VOLUME 29 BOOK 17
JULY 1984

1984 D.A.T.A.BOOK®

ELECTRONIC INFORMATION SERIES

INTERFACE & MEMORY DISCONTINUED DEVICES

EDITION 2

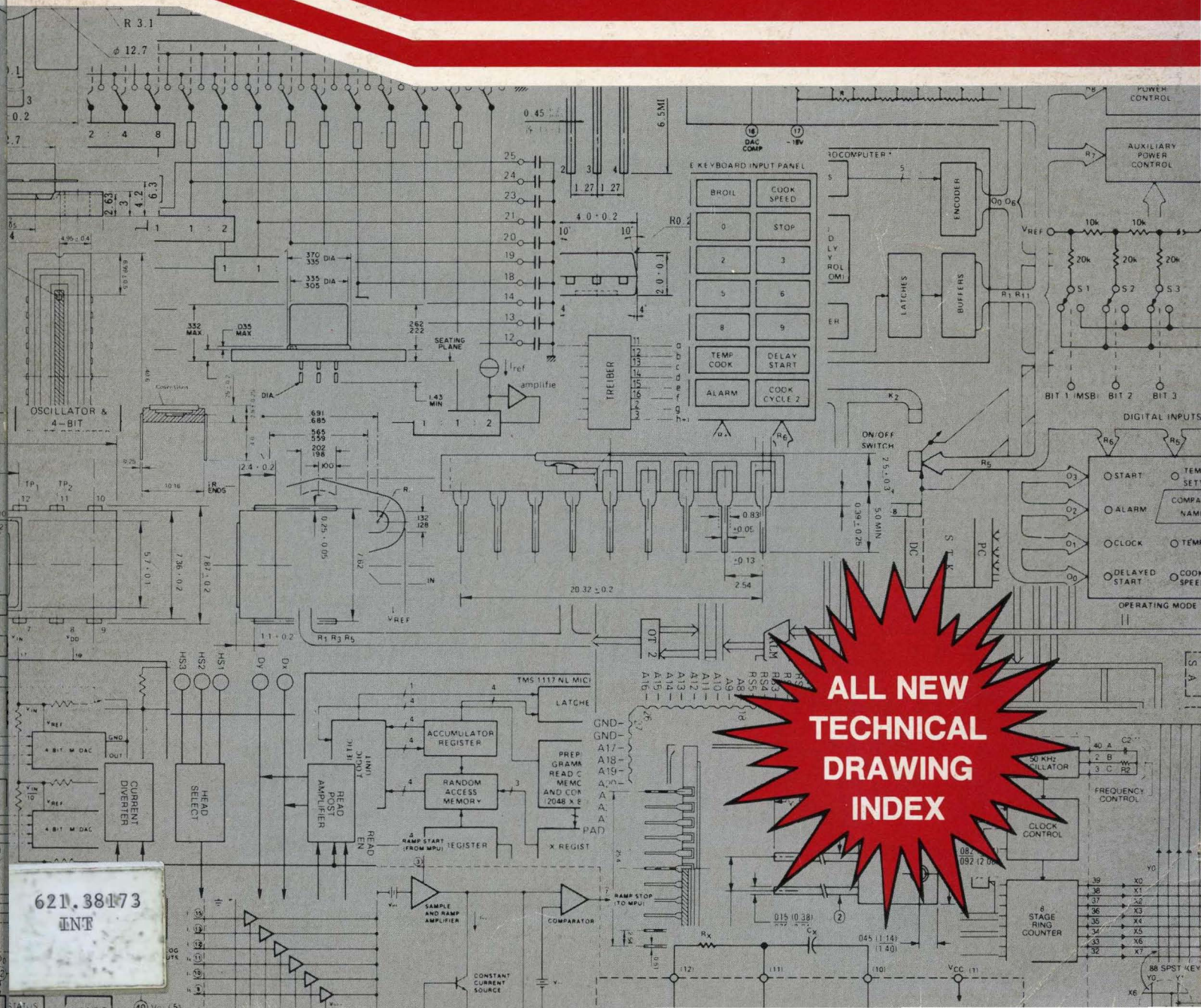

621.38173
INT

D.A.T.A.BOOK
ELECTRONIC INFORMATION SERIES
INTERFACE & MEMORY DISC. DEVICES EDITION 2
1984

D.A.T.A.BOOKS International Representatives

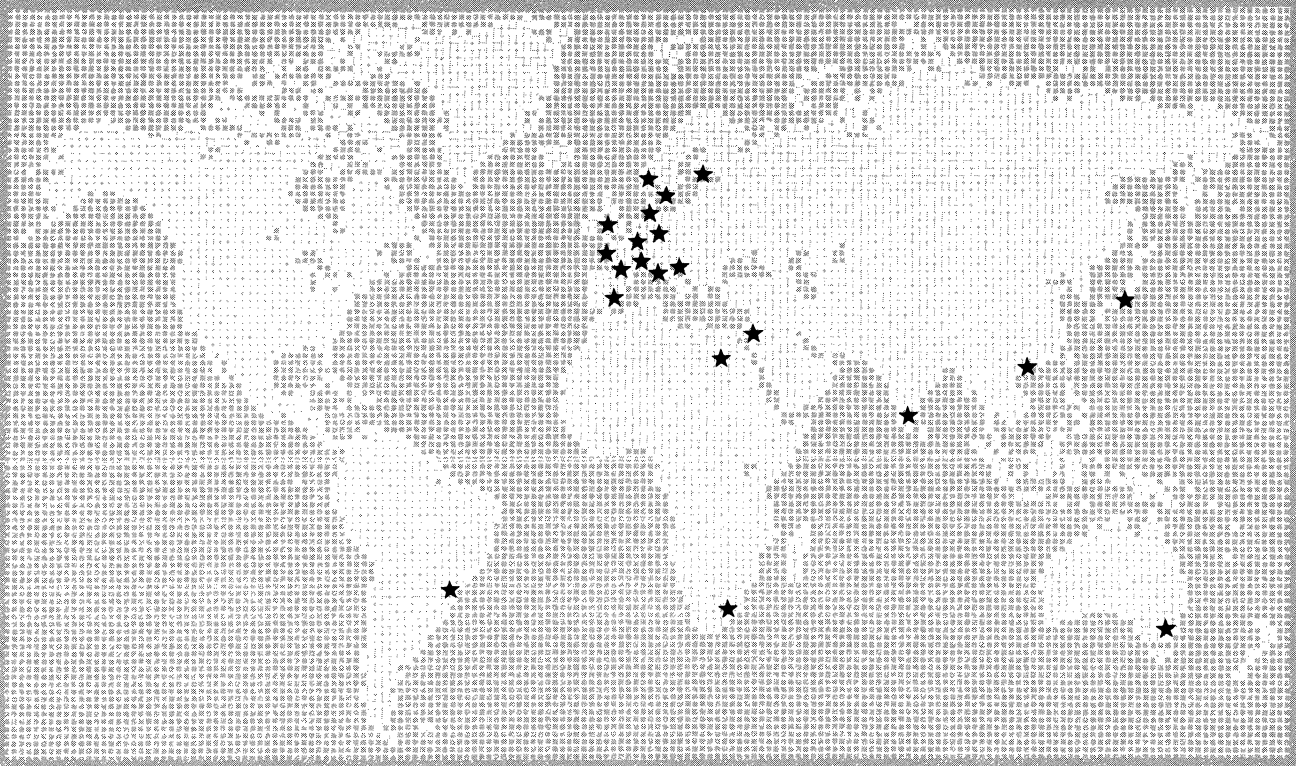

For orders within the countries listed below, please contact your local representative for prompt service.

Australia, Papua, New Guinea and New Zealand
J.H. BOOK SERVICES PTY. LTD.
75 Archer Street (P.O. Box 311)
Chatswood, N.S.W., Australia 2067
Telephone: 419 7779 or 419 2386
Telex: (790) 27621

Austria
DIPL. ING. PAUL KUGLER GmbH
Cranachstrasse 5A
A/1133 Wien, Austria
Telephone: (0222) 84 13 46 or 84 17 062
Telex: (847) 133075

Belgium, Netherlands and Luxemburg
KREISLER-IMPORTS B.V.
P.O. Box 93053
Joan Maetsuyckerstraat 257
2509 AB-The Hague, Netherlands
Telephone: 856555
Telex: (844) 33229

Brazil
PUBLICACOES TECNICAS INTERNACIONAIS LTDA
Rua Peixoto Gomide 209
Caixa Postal 1703
01409 Sao Paulo, SP Brazil
Telephone: 257 1640/258 8167
Telex: (391) 1135844

People's Republic of China and Southeast Asia
CCI ASIA-PACIFIC
Dominion Centre
Suite 500
43-59 Queen's Road East
Hong Kong
Telex: (780) 75368

Denmark
JUL. GJELLERUPS BOOKSELLERS ApS
Solvgade 87-89
DK 1307 Copenhagen K, Denmark
Telephone: (1) 137233
Telex: (855) 19110

England, Scotland and Wales
D.A.T.A. INTERNATIONAL, INC.
Mr. Nick Xydas – Portman House
16-20 Victoria Road
Romford RM1 2JH
Essex, England
Telephone: (708) 46 447
Telex: (851) 946303

Finland
AKATEEMINEN KIRJAKAUPPA
Keskuskatu 1
Helsinki SF 00101, Finland
Telephone: 90 6511 22
Telex: (857) 125080

France
RADIO TELEVISION FRANCAISE
9, Rue d'Arcueil
94250 Gentilly
France
Telephone: 664-11-01
Telex: (842) 201069F

India
ALLIED PUBLISHERS SUBSCRIPTION AGENCY
750 Mount Road
Madras 600 002, India
Telephone: 88011
Telex: (953) 416014

Israel
TELDAN PUBLICATIONS DIV
P.O. Box 18094
Tel Aviv, 61180, Israel
Telephone 03-250-073
Telex: (922) 341390/361360

Italy
CENTRO EDIZIONI TECHNICHE INTERNAZIONALI
Via Pordenone, 17
20132 Milano, Italy
Telephone: 215 2378/2527
Telex: (843) 310229

Japan
EMUTECH ENGINEERING BOOKS, LTD.
Seiko Bld. #201 1-21 Yotsuya
Shinjuku-Ku, Tokyo 160, Japan
Telephone: 3536066
Telex: (781) 27243

Norway
NARVESEN AS, DIV. LITTERATURTJENSTE
Postboks 6125
Etterstad, Oslo 6, Norway
Telephone: 19-40-20
Telex: (856) 76835

Portugal
DEFEX PORTUGAL
Rua Presidente Arriaga
82 R/C
1200 Lisboa, Portugal
Telephone: 60 91 24/74
Telex: (832) 15665 DEFEX P

South Africa
ALLIED ELECTRONIC COMP. (PTY.) LTD.
P.O. Box 6387
Dunswart 1508
South Africa
Telephone: (11) 528661
Telex: (960) 425559

Spain
SIESA
Gran Via de Carles III, 80
Barcelona-28, Spain
Telephone: 3300954
Telex: (831) 54132

Sweden
ELFA RADIO & TELEVISION AB
171 17 Solna, Sweden
Telephone: 730 07 00
Telex: (854) 10479

Switzerland
MITRON LTD.
Baarerstr. 79
CH-6300 Zug 2
Switzerland
Telephone: 223672
Telex: (845) 864994

Turkey
BARKEY LTD.
P.K. 667,
Sisli,
Istanbul, Turkey
Telephone: (90) (11) 1479740/1489147 Telex: (821) 23401

West Germany
I.W.T. VERLAG GmbH
DahlienstraBe 4
8011 Vaterstetten bei Munchen
West Germany
Telephone: 08106-4986
Telex: (841) 5213989

D.A.T.A. INC. **P.O. Box 26875/ San Diego, California 92126**

1984 D.A.T.A.BOOK®

ELECTRONIC INFORMATION SERIES
VOLUME 29 - BOOK 17 - JULY 1984

INTERFACE & MEMORY DISCONTINUED DEVICES

EDITION 2
14,211 TYPES [redacted]ACTURERS

D.A.T.A. INC.
A Cordura Company
9889 Willow Creek Rd. P.O. Box 26875
San Diego, California 92126
Tel.: (619) 578-7600
(800) 854-7030
TLX: 9103221340

PUBLISHER
Laurence E. Laumann, *President*
Virginia Sorrells, *Administrative Assistant*

EDITORIAL
David M. Rady, *Managing Editor*
Karen E. Wilcox, *Assistant Managing Editor*
Frank E. Kupec, *Product Development Coordinator*
Dorothy Kennedy, *Manufacturers Service Representative*

ENGINEERING EDITORS
Janice H. Perley, Jim Fitzgerald, William T. Dennison, Steve Rohrick, Raymond J. Robinson

PRODUCTION EDITORS
Mary Herrin, Linda Haque, Phillis Thrower, Cindy Baney

GRAPHICS
Eloise S. Stiverson, *Art Director*
Cynthia P. Wilson, *Graphics Supervisor*
Brad Kerchner
Lorraine S. Leung
Lynda Bennett

OPERATIONS
Karen Detert, *Marketing Operations Manager*
Sherry Spina, *Financial Coordinator*
Phyllis Gosse, *Customer Service*
Maureen Meals, Customer Service

MARKETING & ADVERTISING
Janet Pfeifer, *Direct Response Marketing Manager*
Karen Castillo, *Production Coordinator*
Nita Main, *Secretary*
Chuck Hirsch, *Telemarketing Manager*

DIRECT SALES
Bob Bryden, *National Sales Manager*

SALES REPRESENTATIVES
Southern California:
Varigon Associates
137 Eucalyptus Dr.
El Segundo, CA 90245
(213) 322-1120

Varigon Associates
4805 Mercury St., Ste. 1
San Diego, CA 92111

Varigon Associates
22976 El Toro Rd., Ste. 1
El Toro, CA 92630
(714) 855-0233

No. New Jersey, New York City & Long Island:
AstroRep Inc.
103 Cooper Street
Babylon, NY 11702
(516) 422-2500

AstroRep Inc.
717 Convery Blvd.
Perth Amboy, NJ 08861
(201) 826-8050

EUROPEAN MARKETING
Nick Xydas, *European Sales Manager*
European Office:
D.A.T.A. International
Portman House
16-20 Victoria Road
Romford RM1 2 JH
Essex, England
Romford 46 447

D.A.T.A., Inc., is a subsidiary of CORDURA PUBLICATIONS, INC., 9889 Willow Creek Rd., P.O. Box 26260, San Diego, CA 92126

D.A.T.A.BOOK (USPS 559-390) Electronic Information Series is published 40 times per year in the following sequence: 0 in Jan., 1 in Feb., 8 in Mar., 0 in Apr., 0 in May, 7 in Jun., 1 in Jul., 6 in Aug., 6 in Sept., 0 in Oct., 0 in Nov., and 11 in Dec., for $2,018.00 (Full U.S. Price) by D.A.T.A, Inc., 9889 Willow Creek Rd., P.O. Box 26875, San Diego, CA 92126. Second-class postage paid at San Diego, CA ISSN 0732-5894.

POSTMASTER: Send address changes to D.A.T.A., Inc., P.O. Box 26875, San Diego, CA 92126.

COPYRIGHT©1984 by Derivation and Tabulation Associates, Inc., a Cordura Company, all rights reserved. No part of this publication may be reproduced, stored in a retrieval system or transmitted, in any form or by any means, electronic, mechanical, photocopying, recording or otherwise, without the prior written permission of the publisher and corporate officer of CPI. This includes text, tabularized information and illustrations.

TABLE OF CONTENTS

INTERFACE - 1

HOW TO USE THIS BOOK i
INTERPRETERS - Symbols and Codes Explained XI1
DRAWING INDEX XI19
TYPE NO. CROSS INDEX
1. All Types 1
TECHNICAL SECTIONS
Drivers
2. Logic Buffers/Drivers 11
3. Line Drivers/Transmitters - Includes Bus Drivers 16
4. Memory/Clock Drivers 19
5. Peripheral/Power Drivers 21
6. Display Drivers 23
7. Switch Drivers 26
Converters
8. A/D Converters 27
9. D/A Converters 28
10. Logic Level Converters/Level Translators 31
Switches
11. Analog Gate Switches: Bilateral, Multiple 33
12. Analog Multiplexers 41
13. Digital Multiplexers/Selectors 42
14. Digital Demultiplexers/Decoders 46
Receivers/Sensors
15. Line Receivers 48
16. Line Transceivers 50
17. Sense Amplifiers 51
18. Sample/Hold 54
19. Schmitt Triggers 55
Special Devices
20. UARTSs, Priority Encoders, Data Acquistion Systems 56
21. (Reserved)
SUPPLEMENTARY SECTIONS
22. Logic/Block Drawings 62

MEMORY - 2

INTERPRETERS - Symbols and Codes Explained XSM1
TYPE NO. CROSS INDEX
1. All Types 1
TECHNICAL SECTIONS
2. Read-Write Memories (RAMS) 20
3. Read-Only Memories (ROMS) 57
4. Characters Generators 84
5. (Reserved)
6. Code Converters 87
7. Shift Registers 90
8-19. (Reserved)
20. Special Memory Devices 109
(Including Trigonometric ROMS-ATN,COS,SIN; CAMS; PLAS; Rhythm-Generators)
SUPPLEMENTARY SECTIONS
Manufacturers' Codes, Names & Addresses 111

DISCLAIMER OF WARRANTIES: Although the information contained within this volume has been obtained from sources generally believed to be reliable, no warranty (express or implied) can be made as to its accuracy or completeness, nor is any responsibility assumed by the publisher or anyone connected with it for lose or damages suffered through reliance on any information contained in this volume. Specifically, no warranty of merchantability, fitness for a particular purpose or any other warranty is made or to be implied with respect to this volume, and no person has the authority to modify such limitation except in a writing signed by a corporate officer of the publisher. The acceptance of this manual is conditional on the acceptance of this disclaimer. If the buyer does not accept the terms of this disclaimer, return the manual within thirty (30) days and the publisher will refund any money advanced by the buyer toward the purchase of this manual.

EDITORIAL POLICY AND PROCEDURES

PURPOSE

This D.A.T.A.BOOK is designed to report comprehensively on what is presently being discontinued throughout the world in the field of Integrated Circuit devices. While a book such as this can not provide 100% of the information you might need, its primary aims are those of facilitating the selection of types suitable to your technical requirements, and of directing you to the sources of their manufacture.

TECHNICAL DATA ACQUISITION

D.A.T.A. acquires and processes the information presented in this D.A.T.A.BOOK with the cooperation of the participating manufacturers who supply us with their latest technical information. Manufacturers are not charged for the listing of their products.

MICROFILM SERVICE

Type numbers in the Cross Index indicating data sheets are available, can be obtained in a Microfilm Service. Inquiries should be directed to Customer Service at 1-800-854-7030.

SUBSTITUTE TYPES AND COMPATIBILITY

This D.A.T.A.BOOK can not truly claim to be an interchangeability chart; however, because of the sequencing arrangement of selected characteristics in the technical sections, types with the same or similar characteristics are grouped together. For purposes of replacement, this means of thorough, convenient technical comparison should prove superior to, and safer than, a mere listing of possible substitute type numbers.

MANUFACTURERS' SPECIFICATIONS

Every effort is made to ensure the accuracy of the entries herein; however, the publisher can not be held responsible nor guarantee against the possibility of error or omission. Only the manufacturers or their authorized representatives can provide you with complete technical details.

HOW TO USE THIS BOOK

2 BASIC WAYS:

	If you know:	And need to know:	Read:
1	Electrical & mechanical requirements	A type number	Explanation 1
2	A type number	The electrical and/or mechanical characteristics or its circuit configuration or who manufactures it or an equivalent type	Explanation 2

---

1 **If you know:** the electrical and mechanical requirements (including military):
And need to know: a suitable type number:

a. Select from the Table of Contents the Technical Section corresponding to the known device type.

b. Turn to that section. Symbols and codes used in these technical sections are explained in the "Interpreter" pages at the front of the book.

c. Notice the sequencing parameters in top right corner of the page

11. ANALOG GATE SWITCHES BILATERAL,MULTIPLE

IN ORDER OF: (1)TECHN (2)SW FORM (3)SWS/CKT (4)DEV CKTS & (5)TYPE NUMBER

LINE No.	5 TYPE NUMBER	DATA SHT.	2 SF WO RM	3 SWS PER CKT	4 DC EK VT S	MAXIMUM SW VOLT P-P (V)	SW CURR P-P (A)	MAXIMUM DRAIN/SOURCE ON RESISTANCE RDS (ⓘ)	* VD (V)	* IS (A)	1 T E C H N	CONTROL LOGIC LEVELS MAX '0' (V)	MIN '1' (V)	RATED PWR SUP SPAN NEG (V)	POS (V)	MAX ON TIME tON (S)	MAX OPER POWER DISS (W)	OPER TEMP RANGE CODE -	+	DRAWINGS LOGIC OR BLOCK	OUTLINE Δ=MO
1	ITS7334CDD		B	5	1	20	500p	100	1.5	2.0m	TTL	11	1.5	0.0	15	500n	500m	0	7	CA36a	DL14ah
2	ITS7334CDE		B	5	1	20	500p	100	1.5	2.0m	TTL	11	1.5	0.0	15	500n	500m	0	7	CA36a	DL14bi
3	ITS7334CPA		B	5	1	20	500p	100	1.5	2.0m	TTL	11	1.5	0.0	15	500n	500m	0	7	CA36a	DL8u

d. Locate the type numbers that are in general agreement with your requirements. Because of the sequencing these types will appear together; select your type number. Military types are prefaced with JAN.

e. If you need the manufacturer, use the manufacturer code from the Type Index page.

f. Turn to the Manufacturers' Codes, Names and Addresses Section.

14. MANUFACTURERS' CODES, NAMES & ADDRESSES

MANUFACTURERS IN ORDER OF D.A.T.A. CODE LETTERS (Cont'd)

(*) **HIS** - Honeywell Information Systems, Old Connecticut Path, Framingham, MA 01701
HITJ - Hitachi Ltd., 1450 Josuihon-Cho, Kodaira-Shi, Tokyo 187, Japan

g. Find the manufacturer code and thus the name.

2

If you know: the type number (including military which has JAN prefix):
First: Turn to Section 1, the TYPE NUMBER CROSS INDEX and find your type number.

If you need to know:

a. The electrical characteristics:
Note the page and line number beside your Type.

2. TYPE No. CROSS INDEX

IN TYPE NUMBER SEQUENCE

TYPE No.	MFRS	Pg&Line	TYPE No.	MFRS	Pg&Line	TYPE No.	MFRS	Pg&Line	TYPE No.	MFRS	Pg&Line	TYPE No.	MFRS	Pg&Line
0-578A1	DDC	40- 43	47B	ANA	29- 97	111	ANA	32- 58	163A	ANA	51- 36	302B	ANA	46- 69
0-578A2	DDC	40- 57	47S	ANA	30- 2	111A	DMC	43-101		DMC		303	ANA	43- 79
0-578B1	DDC	40- 95	47T	ANA	29- 98	111B	DMC	43- 85	163K	ANA	51- 35	303A	ANA	46- 72

Locate that page and line number, and you will find the electrical characteristics.

or b. The circuit drawings:
Those numbers are in the last column

11. ANALOG GATE SWITCHES BILATERAL,MULTIPLE

IN ORDER OF: (1)TECHN (2)SW FORM (3)SWS/CKT (4)DEV CKTS & (5)TYPE NUMBER

LINE No.	5 TYPE NUMBER	DATA SHT.	2 SF WO R M	3 SWS PER CKT	4 DC EK VT S	MAXIMUM SW VOLT P-P (V)	MAXIMUM SW CURR P-P (A)	MAXIMUM DRAIN/SOURCE ON RESISTANCE RDS (Ω)	* VD (V)	* IS (A)	1 TE CH N	CONTROL LOGIC LEVELS MAX '0' (V)	MIN '1' (V)	RATED PWR SUP SPAN NEG (V)	POS (V)	MAX ON TIME tON (S)	MAX OPER POWER DISS (W)	OPER TEMP RANGE CODE -	+	DRAWINGS LOGIC OR BLOCK	OUTLINE Δ=MO
1	IH5022MDD		B	5	1	20	2.0mΔ	100	1.5	2.0m	TTL	11	1.5	0.0	15	500n	500m	5	C	CA36a	DL14ah
2	IH5022MDE		B	5	1	20	2.0mΔ	100	1.5	2.0m	TTL	11	1.5	0.0	15	500n	500m	5	C	CA36a	DL14bi
3	IH5022MPD		B	5	1	20	2.0mΔ	100	1.5	2.0m	TTL	11	1.5	0.0	15	500n	500m	5	C	CA36a	DL14bi

and the drawings are listed sequentially in the Drawing Index. Locate the drawing number and note the page number listed. Your drawing will be on the page indicated.

or c. Who manufactures it:
Use the manufacturer code

2. TYPE No. CROSS INDEX

IN TYPE NUMBER SEQUENCE

TYPE No.	MFRS	Pg&Line	TYPE No.	MFRS	Pg&Line	TYPE No.	MFRS	Pg&Line	TYPE No.	MFRS	Pg&Line	TYPE No.	MFRS	Pg&Line
0-578A1	DDC	40- 43	47B	ANA	29- 97	111	ANA	32- 58	163A	ANA	51- 36	302B	ANA	46- 69
0-578A2	DDC	40- 57	47S	ANA	30- 2	111A	DMC	43-101		DMC		303	ANA	43- 79
0-578B1	DDC	40- 95	47T	ANA	29- 98	111B	DMC	43- 85	163K	ANA	51- 35	303A	ANA	46- 72

refer to the Manufacturers' Codes, Names and Addresses for complete information.

or d. An equivalent type:
Survey the type numbers with similar electrical parameters surrounding the known number to determine the suitable alternatives.

Symbols and codes used in these technical sections are explained in the "Interpreter" pages at the front of the book.

INTERFACE DISCONTINUED DEVICES — INTERPRETER
SYMBOLS AND CODES EXPLAINED

✱ SYMBOLS & CODES COMMON TO MORE THAN ONE SECTION

TYPE NUMBER

Δ Indicators of separate manufacturers producing same type number (non-JEDEC) whose characteristics are not the same. This manufacturer-identifying symbol (assigned by D.A.T.A.) is an integral part of the type number (in Type No. Cross Index, Technical Data Sections) to avoid the possibility of confusing the device of one manufacturer with the devices of the others.

#

⊡

#Mil,(M) – Indicates type is available with MIL-STD-883 screening and/or MIL-STD-883B screening with preburn in tests and burn in, consult Mfr for ordering information.

RT – Suffix indicates device is a replacement type. Consult manufacturer for more information.

#1, #2 – The modifier is designed by D.A.T.A. to distinguish between type no. designations which give only one type number, but have more than one electrical function or package.

% – Different suffixes for the same type number indicate availability of different packaging compositions; i.e., ceramic, plastics, silicone, etc. Consult manufacturer.

#ai ,(A) – Advanced information

Example . . .	Type No.	Manufacturer	Description
(Simulated	ADC 585-12 Δ	HBC	A/D Converter
Information)	ADC 585-12 #	MOTA	Line Receiver
	ADC 585-12 ⊡	TII	Display Driver

LINE NO.

▼ – New type
♦ – Revised specification
– Non-JEDEC type manufactured outside U.S.A.

TECHNOLOGY

BFT – Bi-polar/JFET
BMS – Bi-polar/MOS device
BPR – Bi-polar
CMS – Complementary MOS(CMOS)
DTL – Diode-transistor logic
ECL – Emitter coupled logic
IIL – Integrated injection logic
MOS – Metal oxide semiconductor technology
NMS – N-channel MOS
PMS – P-channel MOS
RTL – Resistor-transistor logic
TFT – Thin film technology
TTL – Transistor-transistor logic

SCHEMATIC (LOGIC) DRAWINGS

♦ – Pin connection designated on outline drawing

OPERATING TEMPERATURE

▽ – Both values of temp. are positive

OUTLINE DRAWING COLUMN
(Letter Prefix)

CH – Chip package
CN – Can package
DL – Dual in line package style – No. of pins
DL ⊡ – Dual in line package style – actual dimensions not specified
F – Flat package style – No. of pins
FP ⊡ – Flat package style – actual dimensions not specified
PC – Printed circuit board
TO – Standard JEDEC outline
Δ – MO standard JEDEC outline

OPERATING TEMPERATURE CODE

0 - 0 up to 9°C
1 - 10 up to 19°C
2 - 20 up to 29°C
3 - 30 up to 39°C
4 - 40 up to 49°C
5 - 50 up to 59°C
6 - 60 up to 69°C
7 - 70 up to 79°C
8 - 80 up to 89°C
9 - 90 up to 99°C
A - 100 up to 109°C
B - 110 up to 119°C
C - 120 up to 129°C
D - 130 up to 139°C
E - 140 up to 149°C
F - 150 up to 159°C
G - 160 up to 169°C
H - 170 up to 179°C
J - 180 up to 189°C
K - 190 up to 200°C

▼ – USED IN NEGATIVE COLUMN TO INDICATE VALUE IS POSITIVE

EXAMPLES OF OPERATING TEMP. RANGE CODE:

5 C

Min. value	Max. value
Lies between	Lies between
−50°C and	+120°C and
−59°C	+129°C

OR

1▼ 8

Min. value	Max. value
Lies between	Lies between
+10°C and	+80°C and
+19°C	+89°C

SECTION 2 — LOGIC BUFFERS/DRIVERS — SECTION 2

TYPE NUMBER	The manufacturers designated type number for the device.
BASIC LOGIC	The basic logic function of the device (e.g. and, or, etc.)
OUTP CONN	A 2 letter code indicating the output driver configuration (e.g. open collector, totem pole, etc.)
CKTS PER DEVICE	The number of unique circuits per package (i.e. a quad 2 input nand gate would have four (4) circuits)
LOGIC INPT PER CKT	The number of inputs per circuit (i.e. a quad 2 input nand gate would have 2 inputs)
TECHN	A 3 letter code indicating the main technological process used in manufacturing the device. (See list of codes on first interpreter page.)
MINIMUM OUTPUT CURRENT	Minimum output drive capability
@ V_0	The voltage at which the minimum output current is specified.
MAX OUTPUT VOLT.	The maximum allowable output operating voltage.
INPUT LOGIC HIGH	The least positive (most negative) value of high-level input voltage for which operation of the logic element within specification limits is guaranteed.
INPUT LOGIC LOW	The most positive (least negative) value of low-level input voltage for which operation of the logic element within specification limits is guaranteed.

Continued next page

SECTION 2 — LOGIC BUFFERS/DRIVERS CONT'D — SECTION 2

RATED PWR SUPPLY SPAN – NEG	The maximum allowable negative voltage (with respect to ground) that may be applied to the (–) supply terminal and still guarantee device operation within specification limits.
RATED PWR SUPPLY SPAN – POS	The maximum allowable positive voltage (with respect to ground) that may be applied to the (+) supply terminal and still guarantee device operation within specification limits.
MAX NOISE IMMUNITY	The difference between the max allowable input low and max output low voltage or the difference between the minimum allowable high input and minimum high output of the device.
MAX PROP DELAY	The time delay between the 50% points on the input and output waveforms when the output changes state due to a change of input state.
MAX OPERATE POWER DISS.	Maximum device power dissipation under all allowable operating conditions
OPER TEMP (–)	Minimum allowable operating temperature (ambient)
OPER TEMP (+)	Maximum allowable operating temperature (ambient)
LOGIC DRAWING NO	Indicates where schematic or logic diagram may be found.
OUTLINE DWG NO	Indicates where device packaging information may be found.

2. LOGIC BUFFERS/DRIVERS

IN ORDER OF: (1)TECH (2) BASIC LOGIC (3)CKTS/DEV (4)MAX OUTP VOLT & (5)TYPE NO.

LINE No.	5 TYPE NUMBER	DATA SHT.	FNC CODE 2 BAS LOG	OUTPUT	ORG. 3 CKT PER DEV	LIONGP	1 TECH	MIN OUTPUT CURRENT (A)	° OUT (V)	4 MAX OUTP. VOLT. (V)	INPUT LOGIC LEVELS MAX '0' (V)	MIN '1' (V)	RATED PWR SUP SPAN NEG (V)	POS (V)	MAX NOISE IMMUN-ITY (V)	MAX PROP. DELAY tpd (S)	MAX OPER POWER DISS (W)	OPER TEMP RANGE CODE -	+	DRAWINGS LOGIC OR BLOCK	OUTLINE Δ=MO
✪	✪		4	5			7 ✪											✪		✪	✪

4 DIF – Differential
AND – AND
EXR – Exclusive OR
INV – Inverting
MUL – Multiple
NAND – NAND
NIV – Non-inverting
NOR – NOR
NAIV – NAND/Inverter
NOIV – NOR/Inverter
NIIV – INV/Non-inverting
NAAD – AND/NAND
NONI – NOR/Non-inverting
OR – OR
ORNO – OR/NOR

4 3S – 3-state
OC – Open collector or drain
5 OE – Open collector and emitter
DC – Complementary drain coupled (CMOS)
EC – Emitter or source coupled
IT – Independent transistor
RP – Resistor pull-up (passive)
TP – Totem pole (active pullup)
AH – Active high
AL – Active low

7 Δ – No. of inputs varies with circuit; max. given

SECTION 3 — LINE DRIVERS/TRANSMITTERS — SECTION 3

TYPE NUMBER	The manufacturers designated type number for the device.
OUTPUT MODE	Manner of driving the transmission line: D – Differential S – Single ended
CKTS PER DEVICE	The number of unique circuits per package (i.e. a quad 2 input nand gate would have four (4) circuits)
OUTPUT VOLTAGE HIGH	The voltage level at an output terminal with input conditions applied that, according to the product specifications, will establish a high level at the output.
OUTPUT VOLTAGE LOW	The voltage level at an output terminal with input conditions applied that, according to product specifications, will establish a low level at the output.
OUTPUT SINK CURRENT	The current into the output terminal with input conditions applied that, according to product specifications, will establish a low level at the output. This applies to active output elements, not inactive pull downs.
@ V_0	The output voltage at which output sink current is specified.
OUTPT RESIST	The maximum small signal parallel equivalent resistance at the amplifier output terminal.
TECHN	A 3 letter code indicating the main technological process used in manufacturing the device. (See list of codes on first interpreter page.)
INPUT LOGIC HIGH	The least positive (most negative) value of high-level input voltage for which operation of the logic element within specification limits is guaranteed.
INPUT LOGIC LOW	The most positive (least negative) value of low-level input voltage for which operation of the logic element within specification limits is guaranteed.

✪ SYMBOLS AND CODES AT TOP OF FIRST INTERPRETER PAGE

Continued next page

SECTION 3 — LINE DRIVERS/TRANSMITTERS CONT'D — SECTION 3

RATED PWR SUPPLY SPAN – NEG	The maximum allowable negative voltage (with respect to ground) that may be applied to the (–) supply terminal and still guarantee device operation within specification limits.
RATED PWR SUPPLY SPAN – POS	The maximum allowable positive voltage (with respect to ground) that may be applied to the (+) supply terminal and still guarantee device operation within specification limits.
MAX PROP DELAY	The time delay between the 50% points on the input and output waveforms when the output changes state due to a change of input state.
MAX OPERATE POWER DISS	Maximum device power dissipation under all allowable operating conditions
OPER TEMP (–)	Minimum allowable operating temperature (ambient)
OPER TEMP (+)	Maximum allowable operating temperature (ambient)
LOGIC DRAWING NO	Indicates where schematic or logic diagram may be found.
OUTLINE DWG NO	Indicates where device packaging information may be found.

3. LINE DRIVERS/TRANSMITTERS

IN ORDER OF: (1)TECH (2)OUTPUT MODE (3)DEV CKTS (4)TYP OUTP VOLT & (5)TYPE NO.

LINE No.	5 TYPE NUMBER	DATA SHT.	2 OUTPUT MODE	3 DEV CKTS	4 TYP OUTPUT VOLTAGE HIGH (V)	LOW (V)	MIN OUTPUT SINK CURRENT (A)	° OUT (V)	MAX OUTP RESIS (Ω)	1 TECH	INPUT LOGIC LEVELS MAX '0' (V)	MIN '1' (V)	RATED PWR SUPPLY SPAN NEG (V)	POS (V)	MAX PROP. DELAY tpd (S)	MAX OPER. POWER DISS (W)	OPER. TEMP. RANGE CODE - | +	DRAWINGS LOGIC OR BLOCK	OUTLINE Δ=MO
✪	✪	4								✪							✪	✪	✪

4 D – Differential
S – Single-ended

SECTION 4 — MEMORY/CLOCK DRIVERS — SECTION 4

TYPE NUMBER	The manufacturers designated type number for the device.
TYPE CODE	Code to differentiate between clock and memory drivers: C = clock driver M = memory driver
CKTS PER DEVICE	The number of unique circuits per package (i.e. a quad 2 input nand gate would have four (4) circuits)
OUTPUT SINK CURRENT	The current into the output terminal with input conditions applied that, according to product specifications, will establish a low level at the output. This applies to active output elements not inactive pull downs.
@ V_0	The output voltage at which output sink current is specified.
SINK OUTP HIGH VOLT.	The high output voltage at the 'sink' output.
MAX PROP DELAY	The time delay between the 50% points on the input and output waveforms when the output changes state due to a change of input state.
@ CAP.	The capacitive load at the output at which the propagation delay (previous item) is specified.
INPUT CURR. LOW	The current into an input when a specified low-level voltage is applied to that input.
TECHN	A 3 letter code indicating the main technological process used in manufacturing the device. (See list of codes on first interpreter page.)
INPUT LOGIC HIGH	The least positive (most negative) value of high-level input voltage for which operation of the logic element within specification limits is guaranteed.
INPUT LOGIC LOW	The most positive (least negative) value of low-level input voltage for which operation of the logic element within specification limits is guaranteed.
RATED PWR SUPPLY SPAN – NEG	The maximum allowable negative voltage (with respect to ground) that may be applied to the (–) supply terminal and still guarantee device operation within specification limits.
RATED PWR SUPPLY SPAN – POS	The maximum allowable positive voltage (with respect to ground) that may be applied to the (+) supply terminal and still guarantee device operation within specification limits.
MAX OPERATE POWER DISS	Maximum device power dissipation under all allowable operating conditions
OPER TEMP (–)	Minimum allowable operating temperature (ambient)
OPER TEMP (+)	Maximum allowable operating temperature (ambient)

✪ SYMBOLS AND CODES AT TOP OF FIRST INTERPRETER PAGE

Continued next page

SECTION 4 — MEMORY/CLOCK DRIVERS CONT'D — SECTION 4

ADD INPT FUNC	Additional available functions the device performs: C = Counter capability D = Decoder capability L = Latch capability
LOGIC DRAWING NO	Indicates where schematic or logic diagram may be found.
OUTLINE DWG NO	Indicates where device packaging information may be found.

4. MEMORY/CLOCK DRIVERS

IN ORDER OF: (1)TECH (2)TYPE CODE (3)DEV CKTS (4)MIN OUTP SK CURR & (5)TYPE NO

LINE No.	5 TYPE NUMBER	DATA SHT.	2 TC YO PD EE	3 DC EK VT S	4 MIN OUTP SINK CURRENT (A)	° OUT (V)	SINK OUTP HIGH VOLT (V)	MAX PROP. DELAY tpd (S)	°CAP (F)	MAX INPUT CURR. (A)	1 T E C H	INPUT LOGIC LEVELS MAX '0' (V)	MIN '1' (V)	RATED PWR SUPPLY SPAN NEG (V)	POS (V)	MAX OPER. PWR. DISS. (W)	OPER TEMP RANGE CODE -	+	AF DU DN LC	DRAWINGS LOGIC OR BLOCK	OUTLINE Δ=MO
✪	✪		(4)								✪						✪	(20)		✪	✪

(4) C — Clock driver
M — Memory driver

(20) C — Counter capability
D — Decoder capability
L — Latch capability

SECTION 5 — PERIPHERAL/POWER DRIVERS — SECTION 5

TYPE NUMBER	The manufacturers designated type number for the device.
CKTS PER DEVICE	The number of unique circuits per package (i.e. a quad 2 input nand gate would have four (4) circuits)
OUTPUT TRANSIS ABS MAX I_{ON}	Absolute maximum allowable output transistor current.
OUTPUT TRANSIS ABS MAX VCE	Collector-emitter breakdown voltage of the output transistor
OUTPUT TRANSIS OUTPUT CONNECT	2 character code designating the connection configuration of the output transistor (e.g., open collector, open emitter, etc.)
MAX OUTPUT ON VOLTAGE	The maximum output on voltage; for open collector type outputs $V_{CE\ SAT.}$ is specified.
@ I_c	The output current level at which the max output voltage is specified.
GATE FUNCTION CODE	The overall basic logic function of the device including the output transistor.
INPUT COMP	Designates the logic families whose output is compatible with the devices input.
MAX PROP DELAY	The time delay between the 50% points on the input and output waveforms when the output changes state due to a change of input state.
TECHN	A 3 letter code indicating the main technological process used in manufacturing the device. (See list of codes on first interpreter page.)
INPUT LOGIC HIGH	The least positive (most negative) value of high-level input voltage for which operation of the logic element within specification limits is guaranteed.
INPUT LOGIC LOW	The most positive (least negative) value of low-level input voltage for which operation of the logic element within specification limits is guaranteed.
RATED PWR SUPPLY SPAN – NEG	The maximum allowable negative voltage (with respect to ground) that may be applied to the (–) supply terminal and still guarantee device operation within specification limits.
RATED PWR SUPPLY SPAN – POS	The maximum allowable positive voltage (with respect to ground) that may be applied to the (+) supply terminal and still guarantee device operation within specification limits.
MAX OPERATE POWER DISS	Maximum device power dissipation under all allowable operating conditions
OPER TEMP (–)	Minimum allowable operating temperature (ambient)
OPER TEMP (+)	Maximum allowable operating temperature (ambient)
LOGIC DRAWING NO	Indicates where schematic or logic diagram may be found.
OUTLINE DWG NO	Indicates where device packaging information may be found.

Continues next page

SECTION 5 PERIPHERAL/POWER DRIVERS CONT'D SECTION 5

5. PERIPHERAL/POWER DRIVERS

IN ORDER OF: (1)TECH (2)DEV CKTS (3)MAX ION (4)MAX VCE & (5)TYPE NUMBER

LINE No.	5 TYPE NUMBER	DATA SHT.	2 DC EK VT S	OUTPUT TRANSIS. 3 ABS MAX Ion (A)	4 ABS MAX Vce (V)	OUT PUT CON	MAX OUTPUT ON VOLTAGE Von (V)	° IC (A)	GATE FUNC. CODE	IC NO PM UP T	MAX PROP DELAY tpd (S)	1 TECH	INPUT LOGIC LEVELS MAX '0' (V)	MIN '1' (V)	RATED PWR SUP SPAN NEG (V)	POS (V)	MAX OPER. POWER DISS. (W)	OPER TEMP RANGE CODE -	+	DRAWINGS LOGIC OR BLOCK	OUTLINE Δ=MO
✪	✪					7			10	11		✪						✪		✪	✪

7

- AND – AND
- DIF – Differential
- EXR – Exclusive OR
- INV – Inverting
- LTH – Latch
- MUL – Multiple (see logic dwg.)
- NAAD – AND/NAND
- NAIV – NAND/Inverter
- NAND – NAND
- NIV – Non-inverting
- NIIV – INV/Non-inverting
- NOR – NOR
- NOIV – NOR/Inverter
- NONI – NOR/Non-inverting
- OR – OR
- ORNO – OR/NOR

10

- 3S – 3-state
- DC – Complementary drain coupled (CMOS)
- EC – Emitter or source coupled
- IT – Independent transistor
- OC – Open collector or drain
- OE – Open collector and emitter
- RP – Resistor pullup (passive)
- TP – Totem pole (active pullup)
- AH – Active high
- AL – Active low

11

- A – DTL, TTL
- B – MOS, TTL
- C – CMOS
- D – DTL
- E – ECL
- F – TTL CMOS
- H – CMOS, PMOS
- L – CMOS, DTL, TTL
- M – MOS
- N – CMOS, NMOS, PMOS, TTL
- T – TTL
- X – CMOS, DTL, PMOS, TTL

SECTION 6 DISPLAY DRIVERS SECTION 6

TYPE NUMBER	The manufacturers designated type number for the device.
FUNCT	A code indicating the main device function(s).
READOUT	A code indicating the type of display the unit is capable of driving.
OUTP CONN	A 2 letter code indicating the output driver configuration (e.g. open collector, totem pole, etc.)
NO LINES	The number of output lines capable of directly or indirectly tying to a display.
OUTPUT SINK CURRENT	The current into the output terminal with input conditions applied that, according to product specifications, will establish a low level at the output. This applies to active output elements, not inactive pull downs.
@ V_0	The output voltage at which output sink current is specified.
OUTPUT ABS MAX VOLT.	The absolute maximum voltage that may be safely applied to the output with the output in the off condition.
MAX PROP DELAY	The time delay between the 50% points on the input and output waveforms when the output changes state due to a change of input state.
TECHN	A 3 letter code indicating the main technological process used in manufacturing the device. (See list of codes on first interpreter page.)
INPUT LOGIC HIGH	The least positive (most negative) value of high-level input voltage for which operation of the logic element within specification limits is guaranteed.
INPUT LOGIC LOW	The most positive (least negative) value of low-level input voltage for which operation of the logic element within specification limits is guaranteed.
RATED PWR SUPPLY SPAN – NEG	The maximum allowable negative voltage (with respect to ground) that may be applied to the (-) supply terminal and still guarantee device operation within specification limits.
RATED PWR SUPPLY SPAN – POS	The maximum allowable positive voltage (with respect to ground) that may be applied to the (+) supply terminal and still guarantee device operation within specification limits.
MAX OPERATE POWER DISS	Maximum device power dissipation under all allowable operating conditions

✪ SYMBOLS AND CODES AT TOP OF FIRST INTERPRETER PAGE

Continued next page

SECTION 6 — DISPLAY DRIVERS CONT'D — SECTION 6

OPER TEMP (-)	Minimum allowable operating temperature (ambient)
OPER TEMP (+)	Maximum allowable operating temperature (ambient)
LOGIC DRAWING NO	Indicates where schematic or logic diagram may be found.
OUTLINE DWG NO	Indicates where device packaging information may be found.

6. DISPLAY DRIVERS

IN ORDER OF: (1)TECH (2)FUNCS (3)READ OUT (4)NO LINES & (5)TYPE NUMBER

LINE No.	5 TYPE NUMBER	DATA SHT.	2 F UNCS	3 READ OUT	OUTPUT CAPABILITY OC UO TN PN	4 NO LINE	MIN OUTPUT SINK CURR. (A)	° OUT (V)	ABS. MAX VOLT (V)	MAX PROP DELAY tpd (S)	1 TECH	INPUT LOGIC LEVELS MAX '0' (V)	MIN '1' (V)	RATED PWR SUPPLY SPAN NEG (V)	POS (V)	MAX. OPER. POWER DISS. (W)	OPER TEMP RANGE CODE -	+	DRAWINGS LOGIC OR BLOCK	OUTLINE Δ=MO
✪	✪		(4)	(5)	(6)	(7)					✪						✪		✪	✪

(4)
- A — Driver
- B — Decoder
- C — Latch
- D — Counter
- E — Oscillator
- F — Multiplexer
- S — Shift register

(5) Number at end of readout code indicates number of circuits or digit driving capability of device (if other than one).
- C — Liquid crystal
- F — Fluorescent
- G — Gas discharge
- I — Incandescent
- L — LED
- T — Thermal printer

(6)
- 3S — 3-state
- AH — Active high
- AL — Active low
- BU — BUFFERED
- RP — Resistor pullup (passive)
- TP — Totem pole (active pullup)
- DC — Complementary drain coupled (CMOS)
- EC — Emitter or source coupled
- ED — Emitter and drain coupled
- OC — Open collector or drain
- OE — Open collector and emitter
- IT — Independent transistor
- PD — Active Pull Down
- CS — Current Source

(7) NOTE: "No. of Lines" column indicates number of output lines per circuit or digt.

SECTION 7 — SWITCH DRIVERS — SECTION 7

TYPE NUMBER	The manufacturers designated type number for the device.
NO OF SW CHAN	The number of outputs available to independently drive analog switches.
OUTPUT SINK CURRENT	The current into the output terminal with input conditions applied that, according to product specifications, will establish a low level at the output. This applies to active output elements not inactive pull downs.
@ V_0	The output voltage at which output sink current is specified.
OUTPUT ABS MAX VOLT.	The absolute maximum voltage that may be safely applied to the output with the output in the off condition.
MAX INPUT DRIVE CURR	The maximum required input current necessary to establish a valid high or low level at the input.
MAX t_{on}	Turn on time: The sum of t_r (rise time) and t_d (delay time) i.e. $t_{on} = t_r + t_d$
MAX t_{off}	Turn off time is the sum of t_s (storage time) and t_f (fall time) i.e. $t_{off} = t_f + t_s$
FEATURES	Special characteristics or features
TECHN	A 3 letter code indicating the main technological process used in manufacturing the device. (See list of codes on first interpreter page.)
INPUT LOGIC HIGH	The least positive (most negative) value of high-level input voltage for which operation of the logic element within specification limits is guaranteed.
INPUT LOGIC LOW	The most positive (least negative) value of low-level input voltage for which operation of the logic element within specification limits is guaranteed.
RATED PWR SUPPLY SPAN — NEG	The maximum allowable negative voltage (with respect to ground) that may be applied to the (-) supply terminal and still guarantee device operation within specification limits.
RATED PWR SUPPLY SPAN — POS	The maximum allowable positive voltage (with respect to ground) that may be applied to the (+) supply terminal and still guarantee device operation within specification limits.

✪ SYMBOLS AND CODES AT TOP OF FIRST INTERPRETER PAGE

Continued next page

SECTION 7 — SWITCH DRIVERS CONT'D — SECTION 7

MAX OPERATE POWER DISS	Maximum device power dissipation under all allowable operating conditions
OPER TEMP (-)	Minimum allowable operating temperature (ambient)
OPER TEMP (+)	Maximum allowable operating temperature (ambient)
LOGIC DRAWING NO	Indicates where schematic or logic diagram may be found.
OUTLINE DWG NO	Indicates where device packaging information may be found.

7. SWITCH DRIVERS

IN ORDER OF: (1)TECHN (2)NO SW CH (3)MIN SINK CURR (4)AB MAX VOLT & (5)TYPE NO

LINE No.	5 TYPE NUMBER	DATA SHT.	2 NO SW CH	3 OUTPUT MIN SINK CURR (A)	OUT (V)	4 ABS MAX VOLT (V)	MAX INP DR CURR (A)	MAX tON (S)	MAX tOFF (S)	FEAT-URES	1 TECHN	INPUT LOGIC LEVELS MAX '0' (V)	MIN '1' (V)	RATED PWR SUPPLY SPAN NEG (V)	POS (V)	MAX. OPER. POWER DISS (W)	OPER TEMP RANGE CODE -	+	DRAWINGS LOGIC OR BLOCK	OUTLINE Δ=MO
✪	✪									(11)	✪						✪		✪	✪

(11)
- Decoder — Decoder included
- Diff — Differential
- COM OUT — Complementary output
- MW PIN — Microwave PIN diode switch driver
- Pwr PIN — PIN diode power switch driver

SECTION 8 — A/D CONVERTERS — SECTION 8

TYPE NUMBER	The manufacturers designated type number for the device.
RESOLUTION BITS	The smallest change that can be distinguished by an A/D converter or produced by a D/A converter. Resolution may be stated in percent of full scale, but is commonly expressed as the number of bits n where the converter has 2^n possible states.
TYPE OF CONVERT	The method of conversion (such as integration) used by the device.
OUTPUT ARITH CODE OPTIONS	The form of digital coding (such as two's complement) available at the device output.
MAX FSR LINEAR ERROR	Also referred to as linearity error or integral non-linearity. The maximum deviation of a converter from the ideal straight line with offset and gain error zeroed.
MAX CONV. TIME	The maximum time required for an A/D converter to complete a single conversion to specified resolution and linearity for a full scale analog input change.
MAX GAIN TEMP. DRIFT	The change in gain (or scale factor) with temperature for a data converter, generally expressed in ppm/°C. (Parts per million per degree centigrade)
INPUT RANGE P-P	The value of the maximum full scale input signal.
INPUT RANGE V-VOLT A-AMP	Indicates whether the p-p input range value is specified as a voltage or current.
MIN OUTPT DRIVE CURR.	Specifies the output drive capability of the device either in unit loads or in current.
OUTPUT VOLTAGE HIGH	The voltage level at an output terminal with input conditions applied that, according to the product specifications, will establish a high level at the output.
OUTPUT VOLTAGE LOW	The voltage level at an output terminal with input conditions applied that, according to product specifications, will establish a low level at the output.
RATED PWR SUPPLY SPAN — NEG	The maximum allowable negative voltage (with respect to ground) that may be applied to the (-) supply terminal and still guarantee device operation within specification limits.
RATED PWR SUPPLY SPAN — POS	The maximum allowable positive voltage (with respect to ground) that may be applied to the (+) supply terminal and still guarantee device operation within specification limits.
MAX OPERATE POWER DISS	Maximum device power dissipation under all allowable operating conditions
OPER TEMP (-)	Minimum allowable operating temperature (ambient)
OPER TEMP (+)	Maximum allowable operating temperature (ambient)
LOGIC DRAWING NO	Indicates where schematic or logic diagram may be found.
OUTLINE DWG NO	Indicates where device packaging information may be found.

Continued next page

SECTION 8 — A/D CONVERTERS CONT'D — SECTION 8

8. A/D CONVERTERS

IN ORDER OF: (1)BITS RES (2)MAX FSR ERROR (3)MAX CONV TIME & (4)TYPE NUMBER

LINE No.	4 TYPE NUMBER	DATA SHT.	1 BITS	CONVERT	OUTPUT ARITH CODE OPTION	2 MAX FSR LINE. ERROR (%)	3 MAX CONV TIME (S)	MAX GAIN TEMP DRIFT ppm/C	INPUT MAX RANGE P-P	INPUT MAX RANGE MODE	MIN OUTP DRIVE CURR (A)	OUTPUT LOGIC LEVELS MAX '0' (V)	OUTPUT LOGIC LEVELS MIN '1' (V)	RATED PWR SUP SPAN NEG (V)	RATED PWR SUP SPAN POS (V)	MAX OPER POWER DISS (W)	OPER TEMP RANGE CODE -	OPER TEMP RANGE CODE +	DRAWINGS LOGIC OR BLOCK	DRAWINGS OUTLINE Δ=MO
	✪		4	5	6						11	12	14				✪		✪	✪

4
- Δ — Maximum bit number given, bit resolution pin programmable
- $ — No. of chords
- * — No. of BCD decades/digits

5
- C — Counter
- D — Dual ramp (slope)
- F — Flash (parallel)
- I — Integrating
- K — Tracking
- N — Companding logarithmic (non-linear)
  - $ — Industrial μ - law
  - § — Industrial A- law
  - * — CCITT A- law
  - # — Bell D3 Spec
- P — Peak detecting
- Q — Quad slope
- R — Resolver-to-digital (see Sec. 25, Code 13)
- S — Successive approximation
- T — 2-step
- Y — Synchro-to-digital (see Sec. 25, Code 13)

6
- A — Standard binary
- B — Complementary binary
- C — Offset binary
- D — Complementary offset binary
- E — Binary coded decimal (BCD)
- F — Complementary BCD
- G — Two's complement
- H — Sign magnitude binary
- I — Inverted binary
- J — Sign magnitude BCD
- K — Buffer
- L — Inverted complementary binary
- M — Complementary two's complement
- N — One's complement
- O — Inverted Offset binary
- P — Inverted complementary offset binary
- R — Inverted BCD
- S — Inverted complementary BCD
- T — Complementary sign magnitude binary
- $ — Steps/chord
- § — Includes serial and Parallel outputs (see Logic Dwg.)
- Ø — ± LSB Linearity

11
- A — Amps - current mode
- B — Bipolar
- U — Unipolar
- V — Volts - voltage mode

12
- D — DTL load
- E — ECL load
- T — TTL load

14
- § — 3-state

SECTION 9 — D/A CONVERTERS — SECTION 9

TYPE NUMBER	The manufacturers designated type number for the device.
RESOLUTION BITS	The smallest change that can be distinguished by an A/D converter or produced by a D/A converter. Resolution may be stated in percent of full scale, but is commonly expressed as the number of bits n where the converter has 2^n possible states.
TYPE OF CONVERT	The method of conversion (such as integration) used by the device.
INPUT ARITH. CODE OPTIONS	The form of digital coding (such as BCD) that the device will accept as a legitimate input.
MAX FSR LINEAR ERROR	Also referred to as linearity error or integral non-linearity. The maximum deviation of a converter from the ideal straight line with offset and gain error zeroed out.
MAX SETTLING TIME	The time elapsed from the application of a full scale step input to a circuit to the time when the output has entered and remained within a specified error band around its final value.

✪ SYMBOLS AND CODES AT TOP OF FIRST INTERPRETER PAGE

Continued next page

@ ACCUR.	The specified error band at which the max settling time is specified
MAX GAIN TEMP. DRIFT	The change in gain (or scale factor) with temperature for a data converter, generally expressed in ppm/°C.
OUTPUT MAX RANGE P-P	The value of the maximum available full scale output signal
OUTPUT MAX RANGE V-VOLT A-AMP	Specifies whether the output max range signal is a voltage or current.
INPUT LOGIC HIGH	The least positive (most negative) value of high-level input voltage for which operation of the logic element within specification limits is guaranteed.
INPUT LOGIC LOW	The most positive (least negative) value of low-level input voltage for which operation of the logic element within specification limits is guaranteed.
RATED PWR SUPPLY SPAN – NEG	The maximum allowable negative voltage (with respect to ground) that may be applied to the (–) supply terminal and still guarantee device operation within specification limits.
RATED PWR SUPPLY SPAN – POS	The maximum allowable positive voltage (with respect to ground) that may be applied to the (+) supply terminal and still guarantee device operation within specification limits.
MAX OPERATE POWER DISS	Maximum device power dissipation under all allowable operating conditions
OPER TEMP (–)	Minimum allowable operating temperature (ambient)
OPER TEMP (+)	Maximum allowable operating temperature (ambient)
LOGIC DRAWING NO	Indicates where schematic or logic diagram may be found.
OUTLINE DWG NO	Indicates where device packaging information may be found.

9. D/A CONVERTERS

IN ORDER OF: (1)BITS RES (2)MAX FSR ERROR (3)MAX SETTLING TIME & (4)TYPE NUMBER

LINE No.	4 TYPE NUMBER	DATA SHT.	1 BITS RES	CONVERTYPE	INPUT ARITH CODE OPTION	2 MAX FSR LINE. ERROR (%)	3 MAX SETTLING TIME (S)	MAX @ ACCUR (%)	MAX GAIN TEMP DRIFT ppm/C	OUTPUT MAX RANGE P-P	OUTPUT MAX RANGE MODE	INPUT LOGIC LEVELS MAX '0' (V)	INPUT LOGIC LEVELS MIN '1' (V)	RATED PWR SUP SPAN NEG (V)	RATED PWR SUP SPAN POS (V)	MAX OPER POWER DISS (W)	OPER TEMP RANGE CODE -	OPER TEMP RANGE CODE +	DRAWINGS LOGIC OR BLOCK	DRAWINGS OUTLINE Δ=MO
✪	✪			(5)	(6)	(7)		(9)			(12)						✪		✪	✪

(5)
- L – Linear
- M – Multiplying
- N – Companding logarithmic (non-linear)
- SM – Sign / Magnitude
  - $ – Industrial μ-law
  - § – Industrial A-law
  - * – CCITT A-law
  - # – Bell D3 Spec
  - P – Pulse – width ratio

(6)
- A – Standard binary
- B – Complementary binary
- C – Offset binary
- D – Complementary offset binary
- E – Binary coded decimal (BCD)
- F – Complementary BCD
- G – Two's complement
- H – Sign magnitude binary
- I – Inverted binary
- J – Sign magnitude BCD
- K – Buffer
- L – Inverted complementary binary
- M – Complementary two's complement
- N – One's complement
- O – Inverted offset binary
- P – Inverted complementary offset binary
- R – Inverted BCD
- S – Inverted complementary BCD
- T – Complementary sign magnitude binary
- $ – Steps/chord

(7) Ø – ± LSB Linearity

(9) Ø – ± LSB

(12)
- A – Amps - current mode
- B – Bipolar
- U – Unipolar
- V – Volts - voltage mode

✪ SYMBOLS AND CODES AT TOP OF FIRST INTERPRETER PAGE

INTERPRETER — INTERFACE DISCONTINUED DEVICES
SYMBOLS AND CODES EXPLAINED

SECTION 10 LOGIC LEVEL CONVERTERS/LEVEL TRANSLATORS SECTION 10

TYPE NUMBER	The manufacturers designated type number for the device.
CONVERTS FROM	The type of logic/level the device accepts as inputs.
CONVERTS TO	The type of logic/level the device will drive.
CKTS PER DEV	The number of individual circuits per package.
LOGIC FUNCT CODE	The type of logical function (and, or, etc.) the device will perform.
NO LOG INP PER CKT	The number of inputs per logic device.
OUTPUT SINK CURRENT	The current into the output terminal with input conditions applied that, according to product specifications, will establish a low level at the output. This applies to active output elements not inactive pull downs.
@ V_0	The output voltage at which output sink current is specified.
TECHN	A 3 letter code indicating the main technological process used in manufacturing the device. (See list of codes on first interpreter page.)
INPUT LOGIC HIGH	The least positive (most negative) value of high-level input voltage for which operation of the logic element within specification limits is guaranteed.
INPUT LOGIC LOW	The most positive (least negative) value of low-level input voltage for which operation of the logic element within specification limits is guaranteed.
RATED PWR SUPPLY SPAN – NEG	The maximum allowable negative voltage (with respect to ground) that may be applied to the (–) supply terminal and still guarantee device operation within specification limits.
RATED PWR SUPPLY SPAN – POS	The maximum allowable positive voltage (with respect to ground) that may be applied to the (+) supply terminal and still guarantee device operation within specification limits.
MAX PROP DELAY	The time delay between the 50% points on the input and output waveforms when the output changes state due to a change of input state.
MAX OPERATE POWER DISS	Maximum device power dissipation under all allowable operating conditions
OPER TEMP (–)	Minimum allowable operating temperature (ambient)
OPER TEMP (+)	Maximum allowable operating temperature (ambient)
LOGIC DRAWING NO	Indicates where schematic or logic diagram may be found.
OUTLINE DWG NO	Indicates where device packaging information may be found.

10. LOGIC LEVEL CONVERTERS/LEVEL TRANSLATORS

IN ORDER OF: (1)TECHN (2)CONV FROM (3)CONV TO (4)DEV CKTS & (5)TYPE NUMBER

LINE No.	5 TYPE NUMBER	DATA SHT.	CONVERTS 2 FROM	CONVERTS 3 TO	4 DEV CKTS	LOGIC FUNC CODE	LIN GP	MIN OUTPUT SINK CURR (A)	MIN OUTPUT SINK CURR @ OUT (V)	1 TECHN	INPUT LOGIC LEVELS MAX '0' (V)	INPUT LOGIC LEVELS MIN '1' (V)	RATED PWR SUP SPAN NEG (V)	RATED PWR SUP SPAN POS (V)	MAX PROP DELAY (S)	MAX OPER POWER DISS (W)	OPER TEMP RANGE CODE -	OPER TEMP RANGE CODE +	DRAWINGS LOGIC OR BLOCK	DRAWINGS OUTLINE Δ=MO
✪	✪		4	5		7				✪							✪	✪		✪

4 5

B	– Bipolar	L	– ECL (10k)
C	– CMOS	M	– MOS
D	– DTL	N	– NMOS
E	– EIA	R	– RTL
G	– GPIG (IEEE 488-1975)	T	– TTL
H	– HNIL	♦	– Bidirectional (From-To) level conversion
I	– IBM (MST)		
K	– ECL (other than 10k)		

7

AND	– AND	NAIV	– NAND/Inverter
EXR	– Exclusive OR	NOIV	– NOR/Inverter
INV	– Inverting	NIIV	– INV/Non-inverting
MUL	– Multiple	NAAD	– AND/NAND
NAND	– NAND	NONI	– NOR/Non-inverting
NIV	– Non-inverting	OR	– OR
NOR	– NOR	ORNO	– OR/NOR

SECTION 11 ANALOG GATE SWITCHES: BILATERAL, MULTIPLE SECTION 11

TYPE NUMBER	The manufacturers designated type number for the device.
SW FORM	The type of switches incorporated in the device such as single pole single throw etc.
SWS PER CKT	The number of switches common to each circuit. A circuit consists of all switches associated with a common control.
CKT PER DEV	The number of circuits in the device.
SW VOLT P-P	The maximum peak-to-peak voltage the switch can safely pass.
SW CURR P-P	The maximum peak-to-peak current the switch can safely pass.
DRAIN/SOURCE ON RESISTANCE	The input to output resistance of the switch in the on state.

✪ SYMBOLS AND CODES AT TOP OF FIRST INTERPRETER PAGE

Continued next page

XI 10

SECTION 11 — ANALOG GATE SWITCHES: BILATERAL, MULTIPLE CONT'D — SECTION 11

@ V_D	The drain voltage at which the on resistance is specified.
@ I_S	The source current at which the on resistance is specified.
TECHN	A 3 letter code indicating the main technological process used in manufacturing the device. (See list of codes on first interpreter page.)
INPUT LOGIC HIGH	The least positive (most negative) value of high-level input voltage for which operation of the logic element within specification limits is guaranteed.
INPUT LOGIC LOW	The most positive (least negative) value of low-level input voltage for which operation of the logic element within specification limits is guaranteed.
RATED PWR SUPPLY SPAN – NEG	The maximum allowable negative voltage (with respect to ground) that may be applied to the (–) supply terminal and still guarantee device operation within specification limits.
RATED PWR SUPPLY SPAN – POS	The maximum allowable positive voltage (with respect to ground) that may be applied to the (+) supply terminal and still guarantee device operation within specification limits.
ON TIME	The propagation delay time from control input to data output measured at the 50% points on the waveform.
MAX OPERATE POWER DISS	Maximum device power dissipation under all allowable operating conditions
OPER TEMP (–)	Minimum allowable operating temperature (ambient)
OPER TEMP (+)	Maximum allowable operating temperature (ambient)
LOGIC DRAWING NO	Indicates where schematic or logic diagram may be found.
OUTLINE DWG NO	Indicates where device packaging information may be found.

11. ANALOG GATE SWITCHES BILATERAL,MULTIPLE

IN ORDER OF: (1)TECHN (2)SW FORM (3)SWS/CKT (4)DEV CKTS & (5)TYPE NUMBER

LINE No.	5 TYPE NUMBER	DATA SHT.	2 SF WO R M	3 SWS PER CKT	4 DC EK VT S	MAXIMUM SW VOLT P-P (V)	MAXIMUM SW CURR P-P (A)	MAXIMUM DRAIN/SOURCE ON RESISTANCE RDS (Ω)	° VD (V)	° IS (A)	1 T E C H N	CONTROL LOGIC LEVELS MAX '0' (V)	MIN '1' (V)	RATED PWR SUP SPAN NEG (V)	POS (V)	MAX ON TIME tON (S)	MAX OPER POWER DISS (W)	OPER TEMP RANGE CODE -	+	DRAWINGS LOGIC OR BLOCK	OUTLINE Δ=MO
	✪	✪	(4)								(11) ✪							✪		✪	✪

(4)
- A – SSNO – Single pole, single throw, Normally open
- B – SSNC – Single pole, single throw, normally closed
- C – SPDT – Single pole, double throw,
- D – DPST – Double pole, single throw
- E – DPDT – Double pole, double throw
- F – 4PST – Four Pole, Single Throw
- G – SP3T – Four Pole Triple Throw

(4)
- H – Single Pole Four Throw
- ∅ – Multiple
- § – Ladder switch
- ⊡ – W/driver
- * – Cross point switch; numbers in next 2 columns represent matrix configuration

(11) ♦ – Load resistance in ohms

SECTION 12 — ANALOG MULTIPLEXERS — SECTION 12

TYPE NUMBER	The manufacturers designated type number for the device.
CKT PER DEV	The number of circuits in the device.
NO INPUT CHANN PER CKT	The number of input lines per individual circuit.
SW VOLT P-P	The maximum peak-to-peak voltage the switch can safely pass.
SW CURR P-P	The maximum peak-to-peak current the switch can safely pass.
DRAIN/SOURCE ON RESISTANCE	The input to output resistance of the switch in the on state.
@ V_D	The drain voltage at which the on resistance is specified.
@ I_S	The source current at which the on resistance is specified.
TECHN	A 3 letter code indicating the main technological process used in manufacturing the device. (See list of codes on first interpreter page.)

Continued next page

SECTION 12 ANALOG MULTIPLEXERS CONT'D SECTION 12

INPUT LOGIC HIGH	The least positive (most negative) value of high-level input voltage for which operation of the logic element within specification limits is guaranteed.
INPUT LOGIC LOW	The most positive (least negative) value of low-level input voltage for which operation of the logic element within specification limits is guaranteed.
RATED PWR SUPPLY SPAN – NEG.	The maximum allowable negative voltage (with respect to ground) that may be applied to the (–) supply terminal and still guarantee device operation within specification limits.
RATED PWR SUPPLY SPAN – POS	The maximum allowable positive voltage (with respect to ground) that may be applied to the (+) supply terminal and still guarantee device operation within specification limits.
MAX PROP DELAY	The time delay between the 50% points on the input and output waveforms when the output changes state due to a change of input state.
MAX OPERATE POWER DISS	Maximum device power dissipation under all allowable operating conditions
OPER TEMP (–)	Minimum allowable operating temperature (ambient)
OPER TEMP (+)	Maximum allowable operating temperature (ambient)
LOGIC DRAWING NO	Indicates where schematic or logic diagram may be found.
OUTLINE DWG NO	Indicates where device packaging information may be found.

12. ANALOG MULTIPLEXERS

IN ORDER OF: (1)TECHN (2)SW FORM (3)SWS/CKT (4)DEV CKTS & (5)TYPE NUMBER

LINE No.	5 TYPE NUMBER	DATA SHT.	2 DC EK VT S	3 CI KN TP S	4 MAXIMUM SW VOLT P-P (V)	MAXIMUM SW CURR P-P (A)	MAXIMUM DRAIN/SOURCE ON RESISTANCE RDS (Ω)	VD (V)	IS (A)	1 TECH N	CONTROL LOGIC LEVELS MAX 0' (V)	MIN 1' (V)	RATED PWR SUPPLY SPANS NEG (V)	POS (V)	MAX PROP DELAY tpd (S)	MAX OPER POWER DISS (W)	OPER TEMP RANGE CODE -	+	DRAWINGS LOGIC OR BLOCK	OUTLINE Δ=MO
✪	✪								(10)	✪							✪		✪	✪

(10) ♦ – Load resistance in ohms

SECTION 13 DIGITAL MULTIPLEXERS/SELECTORS SECTION 13

TYPE NUMBER	The manufacturers designated type number for the device.
CKT PER DEV	The number of circuits in the device.
NO INPUT CHANN PER CKT	The number of input lines per individual circuit.
NO OF ADDRESS LINES	The number of input code lines necessary to select an input channel.
TECHN	A 3 letter code indicating the main technological process used in manufacturing the device. (See list of codes on first interpreter page.)
OUTPUT SINK CURRENT	The current into the output terminal with input conditions applied that, according to product specifications will establish a low level at the output. This applies to active output elements not inactive pull downs.
@ V_0	The output voltage at which output sink current is specified.
INPUT LOGIC HIGH	The least positive (most negative) value of high-level input voltage for which operation of the logic element within specification limits is guaranteed.
INPUT LOGIC LOW	The most positive (least negative) value of low-level input voltage for which operation of the logic element within specification limits is guaranteed.
RATED PWR SUPPLY SPAN – NEG.	The maximum allowable negative voltage (with respect to ground) that may be applied to the (–) supply terminal and still guarantee device operation within specification limits.
RATED PWR SUPPLY SPAN – POS	The maximum allowable positive voltage (with respect to ground) that may be applied to the (+) supply terminal and still guarantee device operation within specification limits.
MAX PROP DELAY	The time delay between the 50% points on the input and output waveforms when the output changes state due to a change of input state.
MAX OPERATE POWER DISS	Maximum device power dissipation under all allowable operating conditions

Continued next page

SECTION 13 DIGITAL MULTIPLEXERS/SELECTORS CONT'D SECTION 13

OPER TEMP (-)	Minimum allowable operating temperature (ambient)
OPER TEMP (+)	Maximum allowable operating temperature (ambient)
LOGIC DRAWING NO	Indicates where schematic or logic diagram may be found.
OUTLINE DWG NO	Indicates where device packaging information may be found.

13. DIGITAL MULTIPLEXERS/SELECTORS

IN ORDER OF: (1)TECHN (2)CKT/DEV (3)INP/CKT (4)MIN OUTPUT SINK CURRENT & (5)TYPE NUMBER

LINE No.	5 TYPE NUMBER	DATA SHT.	2 CKT PER DEV	3 INP PER CKT	NO OF ADDR. LINES	1 TECHN	4 MIN OUTPUT SINK CURRENT (A)	@ OUT (V)	INPUT LOGIC LEVELS MAX '0' (V)	MIN '1' (V)	RATED PWR SUPPLY SPAN NEG (V)	POS (V)	MAX PROP DELAY tpd (S)	MAX OPER POWER DISS (W)	OPER TEMP RANGE CODE -	+	DRAWINGS LOGIC OR BLOCK	OUTLINE Δ=MO
✪	✪					✪									✪		✪	✪

SECTION 14 DIGITAL DEMULTIPLEXERS/DECODERS SECTION 14

TYPE NUMBER	The manufacturers designated type number for the device.
CKT PER DEV	The number of circuits in the device.
NO OUTPUT CHAN/CKT	The number of independent signal outputs per circuit.
DECODES LINES FROM/TO	The number of lines the device converts from/to.
TECHN	A 3 letter code indicating the main technological process used in manufacturing the device. (See list of codes on first interpreter page.)
OUTPUT SINK CURRENT	The current into the output terminal with input conditions applied that, according to product specifications, will establish a low level at the output. This applies to active output elements not inactive pull downs.
@ V_0	The output voltage at which output sink current is specified.
INPUT LOGIC HIGH	The least positive (most negative) value of high-level input voltage for which operation of the logic element within specification limits is guaranteed.
INPUT LOGIC LOW	The most positive (least negative) value of low-level input voltage for which operation of the logic element within specification limits is guaranteed.
RATED PWR SUPPLY SPAN – NEG	The maximum allowable negative voltage (with respect to ground) that may be applied to the (-) supply terminal and still guarantee device operation within specification limits.
RATED PWR SUPPLY SPAN – POS	The maximum allowable positive voltage (with respect to ground) that may be applied to the (+) supply terminal and still guarantee device operation within specification limits.
MAX PROP DELAY	The time delay between the 50% points on the input and output waveforms when the output changes state due to a change of input state.
MAX OPERATE POWER DISS	Maximum device power dissipation under all allowable operating conditions
OPER TEMP (-)	Minimum allowable operating temperature (ambient)
OPER TEMP (+)	Maximum allowable operating temperature (ambient)
LOGIC DRAWING NO	Indicates where schematic or logic diagram may be found.
OUTLINE DWG NO	Indicates where device packaging information may be found.

14. DIGITAL DE-MULTIPLEXERS/DE-CODERS

IN ORDER OF: (1)TECHN (2)CKT/DEV (3)OUT CHAN (4)MIN OUTPUT SINK CURRENT & (5)TYPE NUMBER

LINE No.	5 TYPE NUMBER	DATA SHT.	DEMUX 2 CKT PER DEV	3 OUTPUT CHAN	DECODES LINES FROM	TO	1 TECHN	4 MIN OUTPUT SINK CURRENT (A)	@ OUT (V)	INPUT LOGIC LEVELS MAX '0' (V)	MIN '1' (V)	RATED PWR SUPPLY SPAN NEG (V)	POS (V)	MAX PROP DELAY tpd (S)	MAX OPER POWER DISS (W)	OPER TEMP RANGE CODE -	+	DRAWINGS LOGIC OR BLOCK	OUTLINE Δ=MO
✪	✪						✪									✪		✪	✪

✪ SYMBOLS AND CODES AT TOP OF FIRST INTERPRETER PAGE

SECTION 15 — LINE RECEIVERS — SECTION 15

TYPE NUMBER	The manufacturers designated type number for the device.
INPUT MODE	Indicates whether the input is single ended or differential
CKT PER DEV	The number of circuits in the device.
THRESHOLD VOLT – INPUT HIGH	The input high amplitude that causes the output of an interface device to be at a level at which the load being driven, or the output of the interface device itself, is assumed to change state.
THRESHOLD VOLT – INPUT LOW	The input low amplitude that causes the output of an interface device to be at a level at which the load being driven, or the output of the interface device itself, is assumed to change state.
INPUT RESISTANCE	The single-ended small signal parallel equivalent resistance at the device input terminal.
OUTPUT SINK CURRENT	The current into the output terminal with input conditions applied that, according to product specifications, will establish a low level at the output. This applies to active output elements not inactive pull downs.
@ V_0	The output voltage at which output sink current is specified.
TECHN	A 3 letter code indicating the main technological process used in manufacturing the device. (See list of codes on first interpreter page.)
OUTPUT VOLTAGE HIGH	The voltage level at an output terminal with input conditions applied that, according to the product specifications, will establish a high level at the output.
OUTPUT VOLTAGE LOW	The voltage level at an output terminal with input conditions applied that, according to product specifications, will establish a low level at the output.
RATED PWR SUPPLY SPAN – NEG	The maximum allowable negative voltage (with respect to ground) that may be applied to the (–) supply terminal and still guarantee device operation within specification limits.
RATED PWR SUPPLY SPAN – POS	The maximum allowable positive voltage (with respect to ground) that may be applied to the (+) supply terminal and still guarantee device operation within specification limits.
MAX PROP DELAY	The time delay between the 50% points on the input and output waveforms when the output changes state due to a change of input state.
MAX OPERATE POWER DISS	Maximum device power dissipation under all allowable operating conditions
OPER TEMP (–)	Minimum allowable operating temperature (ambient)
OPER TEMP (+)	Maximum allowable operating temperature (ambient)
LOGIC DRAWING NO	Indicates where schematic or logic diagram may be found.
OUTLINE DWG NO	Indicates where device packaging information may be found.

15. LINE RECEIVERS

IN ORDER OF: (1)TECHN (2)INP MODE (3)CKT/DEV (4)HIGH THRESH VOLT-INPUT & (5)TYPE NUMBER

LINE No.	5 TYPE NUMBER	DATA SHT.	2 IM NO PD E	3 CKT PER DEV	THRESHOLD VOLT-INPUT 4 HIGH (V)	THRESHOLD VOLT-INPUT LOW (V)	MAX INPUT RESIS (Ω)	MIN OUTPUT SINK CURRENT (A)	MIN OUTPUT SINK CURRENT @ OUT (V)	1 TECHN	OUTPUT LOGIC LEVELS MAX '0' (V)	OUTPUT LOGIC LEVELS MIN '1' (V)	RATED PWR SUP SPAN NEG (V)	RATED PWR SUP SPAN POW (V)	MAX PROP DELAY tpd (S)	MAX OPER POWER DISS (W)	OPER TEMP RANGE CODE -	OPER TEMP RANGE CODE +	DRAWINGS LOGIC OR BLOCK	DRAWINGS OUTLINE Δ=MO
	✪		✪		④					✪							✪		✪	✪

④ D – Differential
S – Single-ended

SECTION 16 — LINE TRANSCEIVERS — SECTION 16

TYPE NUMBER	The manufacturers designated type number for the device.
INPUT-OUTPUT MODE	Indicates whether the input-output is single ended or differential.
CKT PER DEV	The number of circuits in the device.
OUTPUT SINK CURRENT	The current into the output terminal with input conditions applied that, according to product specifications, will establish a low level at the output. This applies to active output elements not inactive pull downs.

Continued next page

SECTION 16 — LINE TRANSCEIVERS CONT'D — SECTION 16

@ V_0	The output voltage at which output sink current is specified.
THRESHOLD VOLT – INPUT HIGH	The input high amplitude that causes the output of an interface device to be at a level at which the load being driven, or the output of the interface device itself, is assumed to change state.
THRESHOLD VOLT – INPUT LOW	The input low amplitude that causes the output of an interface device to be at a level at which the load being driven, or the output of the interface device itself, is assumed to change state.
RECUR INPUT CURR	The maximum current flowing into the device input terminal under normal operating conditions.
TECHN	A 3 letter code indicating the main technological process used in manufacturing the device. (See list of codes on first interpreter page.)
OUTPUT VOLTAGE HIGH	The voltage level at an output terminal with input conditions applied that, according to the product specifications, will establish a high level at the output.
OUTPUT VOLTAGE LOW	The voltage level at an output terminal with input conditions applied that, according to product specifications, will establish a low level at the output.
RATED PWR SUPPLY SPAN – NEG	The maximum allowable negative voltage (with respect to ground) that may be applied to the (–) supply terminal and still guarantee device operation within specification limits.
RATED PWR SUPPLY SPAN – POS	The maximum allowable positive voltage (with respect to ground) that may be applied to the (+) supply terminal and still guarantee device operation within specification limits.
MAX PROP DELAY	The time delay between the 50% points on the input and output waveforms when the output changes state due to a change of input state.
MAX OPERATE POWER DISS	Maximum device power dissipation under all allowable operating conditions
OPER TEMP (–)	Minimum allowable operating temperature (ambient)
OPER TEMP (+)	Maximum allowable operating temperature (ambient)
LOGIC DRAWING NO	Indicates where schematic or logic diagram may be found.
OUTLINE DWG NO	Indicates where device packaging information may be found.

16. LINE TRANSCEIVERS

IN ORDER OF: (1)TECHN (2)MODE (3)DEV CKTS (4)DRIVER MIN SINK CURR & (5)TYPE NUMBER

LINE No.	5 TYPE NUMBER	DATA SHT.	2 MODE	3 DEV CKTS	4 DRIVER MIN SINK CURR		RCVR-INPUT THRESHOLD VOLTAGE		MAX RCVR INPUT CURR	1 TECHN	OUTPUT LOGIC LEVELS		RATED PWR SUPPLY SPAN		MAX PROP DELAY	MAX OPER POWER DISS	OPER TEMP RANGE CODE		DRAWINGS	
					(A)	° OUT (V)	HIGH (V)	LOW (V)	(A)		MAX '0' (V)	MIN '1'	NEG (V)	POS (V)	tpd (S)	(W)	-	+	LOGIC OR BLOCK	OUTLINE Δ=MO
✪	✪		④							✪							✪		✪	✪

④ D – Differential
S – Single-ended

SECTION 17 — SENSE AMPLIFIERS — SECTION 17

TYPE NUMBER	The manufacturers designated type number for the device.
CKT PER DEV	The number of circuits in the device.
TYPE OF MEMORY	The type of memory that the devices interfaces with.
INPUT THRESHOLD VOLTAGE MIN	The min input amplitude that causes the output of an interface device to be at a level at which the load being driven or the output of the interface device itself, is assumed to change state.
INPUT THRESHOLD VOLTAGE MAX	The max input amplitude that causes the output of an interface device to be at a level at which the load being driven or the output of the interface device itself, is assumed to change state.
NO INPUT CHANN PER CKT	The number of input lines per individual circuit.
COMM MODE FIRING V P-P	The common mode peak-to-peak input voltage that will cause the output to switch.
TECHN	A 3 letter code indicating the main technological process used in manufacturing the device. (See list of codes on first interpreter page)
OUTPUT VOLTAGE HIGH	The voltage level at an output terminal with input conditions applied that, according to the product specifications, will establish a high level at the output.
OUTPUT VOLTAGE LOW	The voltage level at an output terminal with input conditions applied that, according to product specifications, will establish a low level at the output.

✪ SYMBOLS AND CODES AT TOP OF FIRST INTERPRETER PAGE

Continued next page

XI 15

SECTION 17 — SENSE AMPLIFIERS CONT'D — SECTION 17

RATED PWR SUPPLY SPAN – NEG	The maximum allowable negative voltage (with respect to ground) that may be applied to the (-) supply terminal and still guarantee device operation within specification limits.
RATED PWR SUPPLY SPAN – POS	The maximum allowable positive voltage (with respect to ground) that may be applied to the (+) supply terminal and still guarantee device operation within specification limits.
ADDIT FUNCTIONS AVAILABLE	Any additional or secondary functions the device can perform.
MAX PROP DELAY	The time delay between the 50% points on the input and output waveforms when the output changes state due to a change of input state.
MAX OPERATE POWER DISS	Maximum device power dissipation under all allowable operating conditions
OPER TEMP (-)	Minimum allowable operating temperature (ambient)
OPER TEMP (+)	Maximum allowable operating temperature (ambient)
LOGIC DRAWING NO	Indicates where schematic or logic diagram may be found.
OUTLINE DWG NO	Indicates where device packaging information may be found.

17. SENSE AMPLIFIERS

IN ORDER OF: (1)TECHN (2)CKT/DEV (3)MEM TYPE (4)MIN INP THRESH & (5)TYPE NO.

LINE No.	5 TYPE NUMBER	DATA SHT.	2 CKT PER DEV	3 TYP OF MEM ORY	INPUT THRESHOLD VOLTAGE 4 MIN (V)	INPUT THRESHOLD VOLTAGE MAX (V)	CHN PER CKT	COMM MODE FIRE V P-P (V)	1 TECHN	OUTPUT LOGIC LEVELS MAX '0' (V)	OUTPUT LOGIC LEVELS MIN '1' (V)	RATED PWR SUPPLY SPAN NEG (V)	RATED PWR SUPPLY SPAN POS (V)	AF DUDNLC	MAX PROP DELAY tpd (S)	MAX OPER POWER DISS. (W)	OPER TEMP RANGE CODE -	OPER TEMP RANGE CODE +	DRAWINGS LOGIC OR BLOCK	DRAWINGS OUTLINE Δ=MO
✪	✪			(5)					✪					(15)			✪		✪	✪

(5)
- ARM – Read mostly memory (Amorphous)
- COR – CORE
- MAT – Magnetic tape
- MBM – Magnetic bubble memory
- MOS – MOS
- NMS – NMOS
- PLW – Plated wire

(15)
- L – Latch
- R – Register

SECTION 18 — SAMPLE/HOLD — SECTION 18

TYPE NUMBER	The manufacturers designated type number for the device.
INPUT MIN VOLT P-P	The minimum linear full range peak-to-peak operating input voltage.
INPUT IMPEDANCE	The small signal, low frequency parallel equivalent impedance at the input of the device.
OUTPUT MIN VOLT P-P	The minimum available voltage swing (peak-to-peak) at the device output.
OUTPUT MIN CURR P-P	The minimum available drive current (peak-to-peak) at the device output.
SLEW RATE	The time rate of change of the closed-loop amplifier output voltage for a step-signal input. Normally, slew rate is measured between specified output levels using the largest input voltage step for which amplifier performance remains linear with feedback adjusted for unity amplification.
ACQUISITION TIME	The time the output of a sample/hold circuit takes to change from its previous value to a new value when the circuit is switched from the hold mode to sample mode. It includes the slew time and settling time to within a certain error band of the final value and is usually specified for a full-scale change.
@ OUTP %	The percent of full scale output change at which the acquisition time is specified.
APER TIME	The signal averaging time during the sample-to-hold transition.
SMALL SIGNAL BW	The range of frequencies within which the gain of the device is not more than 3 dB below the value of the midband gain.
MODE CNTRL VOLTAGE HIGH	The minimum high level voltage necessary to determine the sample or hold state of the device.
MODE CNTRL VOLTAGE LOW	The minimum low level voltage necessary to determine the sample or hold state of the device.
RATED PWR SUPPLY SPAN – NEG	The maximum allowable negative voltage (with respect to ground) that may be applied to the (-) supply terminal and still guarantee device operation within specification limits.
RATED PWR SUPPLY SPAN – POS	The maximum allowable positive voltage (with respect to ground) that may be applied to the (+) supply terminal and still guarantee device operation within specification limits.
MAX OPERATE POWER DISS	Maximum device power dissipation under all allowable operating conditions.

Continued next page

SECTION 18 — SAMPLE/HOLD CONT'D — SECTION 18

OPER TEMP (-)	Minimum allowable operating temperature (ambient)
OPER TEMP (+)	Maximum allowable operating temperature (ambient)
LOGIC DRAWING NO	Indicates where schematic or logic diagram may be found.
OUTLINE DWG NO	Indicates where device packaging information may be found.

18. SAMPLE/HOLD

IN ORDER OF: (1)MIN INP VOLT (2)MIN OUT VOLT (3)MAX ACQUISITION ON TIME & (4)TYPE NUMBER

LINE No.	4 TYPE NUMBER	DATA SHT.	INPUT 1 MIN VOLT P-P (V)	INPUT MIN CURR P-P (A)	OUTPUT 2 MIN VOLT P-P (V)	OUTPUT MIN CURR P-P (A)	SLEW RATE V/uS	SAMPLE 3 MAX ACQUIS TIME (S)	SAMPLE MAX ACQUIS °OUT (%)	MAX APER TIME	SMALL SIG BW (HZ)	MODE CNTRL VOLTAGE MAX '0' (V)	MODE CNTRL VOLTAGE MIN '1' (V)	RATED PWR SUP SPAN NEG (V)	RATED PWR SUP SPAN POS (V)	MAX OPER POWER DISS (W)	OPER TEMP RANGE CODE -	OPER TEMP RANGE CODE +	DRAWINGS LOGIC OR BLOCK	DRAWINGS OUTLINE Δ=MO
✪	✪																✪		✪	✪

SECTION 19 — SCHMITT TRIGGERS — SECTION 19

TYPE NUMBER	The manufacturers designated type number for the device.
HYSTERES VOLT	The voltage difference between the positive going input threshold voltage and the negative going input threshold voltage.
INPUT THRESHOLD VOLT POS GOING	The minimum voltage at which a positive going input voltage causes the output voltage to change state.
INPUT THRESHOLD VOLT NEG GOING	The maximum voltage at which a negative going input voltage causes the output voltage to change state.
RECUR INPUT CURR	The maximum current flowing into the device input terminal under normal operating conditions.
CKT PER DEV	The number of circuits in the device.
BASIC LOGIC	The basic logic function of the device (e.g. and, or, etc.)
MAX NOISE IMMUNITY	The difference between the max allowable input low and max output low voltage or the difference between the minimum allowable high input and minimum high output of the device.
MAX PROP DELAY	The time delay between the 50% points on the input and output waveforms when the output changes state due to a change of input state.
TECHN	A 3 letter code indicating the main technological process used in manufacturing the device. (See list of codes on first interpreter name.)
OUTPUT VOLTAGE HIGH	The voltage level at an output terminal with input conditions applied that, according to the product specifications, will establish a high level at the output.
OUTPUT VOLTAGE LOW	The voltage level at an output terminal with input conditions applied that, according to product specifications, will establish a low level at the output.
RATED PWR SUPPLY SPAN – NEG	The maximum allowable negative voltage (with respect to ground) that may be applied to the (-) supply terminal and still guarantee device operation within specification limits.
RATED PWR SUPPLY SPAN – POS	The maximum allowable positive voltage (with respect to ground) that may be applied to the (+) supply terminal and still guarantee device operation within specification limits.
MAX OPERATE POWER DISS	Maximum device power dissipation under all allowable operating conditions
OPER TEMP)-)	Minimum allowable operating temperature (ambient)
OPER TEMP (+)	Maximum allowable operating temperature (ambient)
LOGIC DRAWING NO	Indicates where schematic or logic diagram may be found.
OUTLINE DWG NO	Indicates where device packaging information may be found.

✪ SYMBOLS AND CODES AT TOP OF FIRST INTERPRETER PAGE

Continued next page

XI 17

INTERPRETER — INTERFACE DISCONTINUED DEVICES
SYMBOLS AND CODES EXPLAINED

SECTION 19 — SCHMITT TRIGGERS CONT'D — SECTION 19

19. SCHMITT TRIGGERS

IN ORDER OF: (1)TECHN (2)HYSTERES VOLT (3)INP THRESH POS (4)DEV CKTS & (5)TYPE NO.

LINE No.	5 TYPE NUMBER	DATA SHT.	2 HYSTERES VOLT (V)	INPUT THRESHOLD VOLTAGE 3 POS GOING (V)	NEG GOING (V)	MAX CURR (A)	4 DEV CKTS	LOGIC CODE	NOMINAL SUPPLY	MAX PROP DELAY tpd (S)	1 TECHN	OUTPUT LOGIC LEVELS MAX '0' (V)	MIN '1' (V)	RATED PWR SUPPLY SPAN NEG (V)	POS (V)	MAX OPER POWER DISS (W)	OPER TEMP RANGE CODE -	+	DRAWINGS LOGIC OR BLOCK	OUTLINE Δ=MO
	✪	✪						(9)			✪		(14)					✪	✪	✪

(9)

AND	– AND	NAIV	– NAND/Inverter
EXR	– Exclusive OR	NOIV	– NOR/Inverter
INV	– Inverting	NIIV	– INV/Non-inverting
MUL	– Multiple	NAAD	– AND/NAND
NAND	– NAND	NONI	– NOR/Non-inverting
NIV	– Non-inverting	OR	– OR
NOR	– NOR	ORNO	– OR/NOR

(14)

§	– 3-state
∅	– Open Collector

SECTION 20 — SPECIAL DEVICES — SECTION 20

TYPE NUMBER	The manufacturers designated type number for the device.
TYPE CODE	See list for code meanings.
TECHN	A 3 letter code indicating the main technological process used in manufacturing the device. (See list of codes on first interpreter page.)
INPUT LOGIC HIGH	The least positive (most negative) value of high-level input voltage for which operation of the logic element within specification limits is guaranteed.
INPUT LOGIC LOW	The most positive (least negative) value of low-level input voltage for which operation of the logic element within specification limits is guaranteed.
RATED PWR SUPPLY SPAN – NEG	The maximum allowable negative voltage (with respect to ground) that may be applied to the (-) supply terminal and still guarantee device operation within specification limits.
RATED PWR SUPPLY SPAN – POS	The maximum allowable positive voltage (with respect to ground) that may be applied to the (+) supply terminal and still guarantee device operation within specification limits.
MAX OPERATE POWER DISS	Maximum device power dissipation under all allowable operating conditions
OPER TEMP (-)	Minimum allowable operating temperature (ambient)
OPER TEMP (+)	Maximum allowable operating temperature (ambient)
GENERAL DESCRIPTION	A brief description of the devices main functions and/or characteristics.
LOGIC DRAWING NO	Indicates where schematic or logic diagram may be found.
OUTLINE DWG NO	Indicates where device packaging information may be found.

20. SPECIAL DEVICES

IN ORDER OF: (1)TECHN (2)TYPE CODE & (3)TYPE NUMBER

LINE No.	3 TYPE NUMBER	DATA SHT.	2 TYPE CODE	1 TECHN	INPUT LOGIC LEVELS MAX '0' (V)	MIN '1' (V)	RATED PWR SUPPLY SPAN NEG (V)	POS (V)	MAX OPER POWER DISS (W)	OPER TEMP RANGE CODE -	+	GENERAL DESCRIPTION	DRAWINGS LOGIC OR BLOCK	OUTLINE Δ=MO
	✪	✪	(4) ✪						✪				✪	✪

(4)

1:	Priority encoder	17:	CODEC (A/D and D/A)	31:	Parallel Communication Tranceivers (PIA,VIA,I/O Ports)
2:	Universal asynchronous receiver/transmitter (UART)	18:	Universal sync/async data communications center	32:	Data Transmission (PSAT)
3:	Data acquisition system	19:	Track and hold amplifier	33:	Data Reception (PSAR)
4:	Clamp/terminator	20:	Baud rate generator	40:	Floppy disk/diskette
5:	Programmer/sequencer	21:	Bus receiver	41:	Tape
6:	Special transmitting/receiving interface device	22:	Bus transceiver	42:	TTY
7:	Converter sub-system	23:	Error dec	43:	Disk (Hard)
8:	Memory interface sub-system	25:	Signal processor	44:	Printer
9:	Touch control switch interface	26:	Encryption/Decryption	45:	Display (incl. CRT)
10:	Programmable power source	27:	Interface Adapter	46:	Keyboard
11:	Telecommunications device	28:	Programmable Interface	47:	Memory
12:	Transducer device	29:	Peripheral Controller	48:	Communication/Controller Devices (PKCC)
13:	Synchro conversion device	30:	Serial Communication (PCI,UART, USART)		
14:	Keyboard encoder				
15:	Signal Conditioner				

✪ SYMBOLS AND CODES AT TOP OF FIRST INTERPRETER PAGE

INTERFACE DISCONTINUED DEVICES – DRAWING INDEX

LOGIC/BLOCK DRAWINGS

DRAWING NO.	PAGE	DRAWING NO.	PAGE	DRAWING NO.	PAGE	DRAWING NO.	PAGE	DRAWING NO.	PAGE	DRAWING NO.	PAGE	DRAWING NO.	PAGE
		54LS253W	68	74-365N	72	AA115	82	AC32	89	AE46	98	AF4	110
40-07A	62	54S257W	68	74-366N	72	AA117	82	AC35	90	AE47	98	AF5	110
40-09A	62	54S258W	68	74-367N	72	AA118	82	AC36	90	AE48	98	AF13	110
40-10B	62	54-298W	68	74-368N	72	AA119	82	AC37	90	AE49	98	AF14	110
40-11B	62	54LS352W	68	74LS398N	72	AA139	83	AC42	90	AE50	99	AF15	110
40-16B	62	54-365W	66	74LS399N	73	AA163	83	AC46	90	AE51	99	AF16	110
40-26B	62	54-366W	66	74-468P	73	AA164	83	AC49	90	AE53	99	AF21	111
40-33B	62	54-367W	66	74LS540N	73	AA172	83	AC50	91	AE54	99	AF22	111
40-41A	62	54-368W	66	74LS541	73	AB1	83	AC51	91	AE55	99	AF23	111
40-43B	62	54LS399W	68	74F545P	73	AB2	83	AC53	91	AE58	99	BA5	112
40-54B	62	54LS540W	66	74LS642	73	AB3	83	AC53a	91	AE59	99	BA29	112
40-55B	62	54LS541W	66	74LS645	74	AB6	83	AC54	91	AE62	99	BA37	112
40-56B	63	74-00N	69	75-22	75	AB7	83	AD1	92	AE63	99	BA48	112
40-107B	63	74-01N	69	75-34	75	AB8	84	AD2	92	AE66	99	BA50	112
44-26A	63	74-02N	69	75-38	75	AB9	84	AD3	92	AE68	100	BA72	113
44-33A	63	74-03N	69	75-107	75	AB15	84	AD4	92	AE70	100	BA75	113
44-41U	63	74-04N	69	75-108	75	AB20	84	AD29	92	AE71	100	BA78	115
45-02B	63	74-05N	69	75-109	75	AB22	84	AD34	92	AE74	100	BA91	116
45-11B	63	74-07N	69	75-122N	75	AB24	84	AD34a	92	AE75	100	BA98	116
45-32B	63	74-09N	69	75-150	75	AB25	84	AD35	92	AE76	101	BA105	116
45-43B	63	74-13N	69	75-154	75	AB26	84	AD40	92	AE85	101	BA106	117
45-83B	63	74-33N	69	75-182	75	AB27	84	AD45	92	AE86	101	BA123	117
54-00W	66	74-41N	69	75-189	75	AB29	84	AD46	92	AE90	102	BA128	117
54S00W	64	74-42N	73	75-430N	75	AB30	85	AD49	93	AE91	102	BA143	118
54LS01W	64	74-45N	69	75-431P	76	AB31	85	AD54	93	AE92	102	BA146	118
54S02W	64	74-46N	70	75-433P	76	AB32	85	AD66	93	AE93	102	BA147	119
54S03W	64	74-48N	70	75-491N	76	AB45	85	AD92	93	AE94	102	BA148	119
54-04W	64	74LS49N	70	75-492N	76	AB51	86	AD94	93	AE95	103	BA149	119
54S04W	64	74-125N	70	AA1	77	AB52	86	AD94a	93	AE97	103	BA153	119
54-05W	64	74-126N	70	AA7	77	AB53	86	AD95	93	AE101	103	BA163	119
54S05W	64	74LS135N	74	AA9	77	AB55	86	AD104	93	AE108	104	BA165	120
54-07W	66	74LS137N	74	AA12	77	AB56	86	AD105	93	AE111	104	BA168	120
54-13W	64	74S138N	70	AA14	77	AB58	86	AD106	94	AE112	104	BA186	120
54-33W	64	74S139N	70	AA15	77	AB59	86	AD107	94	AE117	104	BA201	120
54-40W	64	74-148N	70	AA15b-c	77	AB71	86	AD109	94	AE131	104	BA215	120
54-41W	64	74-150N	70	AA17	78	AB73	86	AD150	94	AE133	105	BA224	121
54-45W	66	74-151N	70	AA19	78	AB74	86	AD151	94	AE134	105	BA236	121
54-46W	66	74-152B	71	AA31	78	AB75	86	AD152	94	AE135	105	BB1	121
54-48W	65	74-153N	71	AA32	78	AB78	87	AD153	94	AE136	105	BB30	122
54LS49W	65	74-154N	71	AA32c	78	AB81	87	AD154	95	AE139	105	BB32	122
54-12WW	65	74-155N	71	AA34	78	AB83	87	AD155	95	AE144	105	BB34	122
54-126W	65	74-156N	71	AA50	78	AB84	87	AD156	95	AE156	105	BB37	122
54LS137W	67	74-157N	71	AA50a-h	78	AB105	87	AD157	95	AE160	106	BB39	122
54S138W	67	74S158N	71	AA51	79	AC1	87	AD161	95	AE165	106	BB40	123
54S139W	67	74-159N	71	AA52	79	AC8	87	AD162	96	AE166	106	BB42	123
54-147W	65	74S238N	74	AA53	79	AC9	87	AD163	96	AE172	106	BB44	123
54-148W	65	74S239N	74	AA54	79	AC10	87	AD164	96	AE173	106	BB65	123
54-150W	67	74S240N	71	AA54a-b	79	AC12	87	AD165	96	AE176	106	BB71	123
54-151W	67	74S241N	71	AA55	79	AC13	87	AD166	96	AE178	107	BB83	123
54-152W	65	74S242N	71	AA57	79	AC15	88	AD167	96	AE180	107	BB88	124
54-153W	67	74LS243N	74	AA58	79	AC15a	88	AE1	97	AE183	107	BB93	124
54-154W	67	74LS244N	74	AA59	79	AC17	88	AE6	97	AE192	108	BB96	124
54-155W	67	74LS245N	71	AA78	80	AC19	88	AE7	97	AE195	108	BB98	124
54-156W	67	74-248N	74	AA79	80	AC20a	88	AE8	97	AE198	108	BB101	124
54-157W	67	74-251N	72	AA87	81	AC20b	88	AE15	97	AE199	108	BB156	124
54LS240W	65	74-251W	74	AA91	81	AC20c	88	AE16	97	AE202	108	BB157	125
54LS241W	65	74-253N	72	AA92	81	AC21	88	AE23	98	AE226	109	BB158	125
54LS242W	67	74S257N	72	AA95	81	AC22	88	AE26	98	AE227	109	BB159	126
54LS244W	65	74S258N	72	AA104	81	AC23	88	AE28	98	AE265	109	BB160	126
54LS245W	67	74LS266N	74	AA105	81	AC26	89	AE42	98	AE270	109	BB161	126
54-246W	65	74-298N	72	AA109	81	AC27	89	AE43	98	AE276	109	BB179	126
54-248W	65	74LS352N	72	AA110	81	AC30	89	AE44	98	AE276a	109	BB180	126
54-251W	68	74LS353N	72	AA114	82	AC31	89	AE45	98	AE283a	110	BB189	126

XI 19

DRAWING INDEX – INTERFACE DISCONTINUED DEVICES

LOGIC/BLOCK DRAWINGS

DRAWING NO.	PAGE	DRAWING NO.	PAGE	DRAWING NO.	PAGE	DRAWING NO.	PAGE	DRAWING NO.	PAGE	DRAWING NO.	PAGE	DRAWING NO.	PAGE
BB192	127	CA48	137	CB14	146	DA4	156	DC9	163	E7-19	173	E11-68	179
BB193	127	CA49	137	CB19	146	DA5	156	DC10	163	E7-23	173	E11-69	179
BB206	127	CA50	143	CB21	146	DA7	156	DC11	163	E7-24	173	E11-71	180
BB209	127	CA51	143	CB22	146	DA8	156	DC12	163	E7-25	173	E11-72	181
BB210	128	CA52	137	CB37	146	DA9	156	DC13	164	E7-26	173	E11-73	180
BB212	128	CA53	138	CB48	146	DA10	157	DC14	164	E7-27	174	E11-76	180
BB217	128	CA54	138	CB47	147	DA21	157	DC15	165	E7-28	174	E11-77	180
BB218	128	CA55	138	CB49	147	DA23	157	DC20	165	E7-29	174	E11-102	182
BB227	128	CA59	138	CB50	147	DA24	157	DC23	165	E7-35	174	E11-103	182
BB231	129	CA61	138	CB51	147	DA28	157	DC24	165	E7-49	175	E11-104	182
BB252	129	CA62	138	CB52	147	DA29	157	DC25	165	E7-52	174	E11-110	182
BB268	129	CA63	138	CB56	147	DA31	157	DC25a	165	E7-53	174	E11-111	182
BB274	129	CA64	139	CB59b	145	DA32	157	DC27	165	E7-56	174	E11-117	182
BB275	129	CA65	139	CB66	147	DA33	157	DC36	165	E7-57	174	E11-118	182
BB285	129	CA66	139	CB72	145	DA35	157	DC36a	165	E7-58	174	E11-119	182
BB287	129	CA67	139	CB73	145	DA36	158	DD3	165	E8-3	175	E11-130	183
BB294	130	CA68	139	CB74	147	DA37	158	DD9	165	E8-6	175	E11-145	183
BB295	130	CA70	144	CB75	148	DA39	158	DD33	165	E9-2	175	E12-2	184
BB317	130	CA71	144	CC1	148	DA40	158	DD45	166	E9-3	175	E12-3	184
BC2	130	CA71b	144	CC11	148	DA43	158	DD54	166	E9-4	175	E12-4	184
BC3	130	CA72	144	CC13	148	DA47	158	DE1	166	E11-1	176	E12-5	184
BC4	130	CA73	144	CC17	148	DA48	159	DE2	166	E11-5	176	E12-7	184
BC6	130	CA74	140	CC18	148	DA49	159	DE3	166	E11-6	176	E13-36	185
BC7	131	CA79	140	CC25	148	DA53	159	DE4	166	E11-8	176	E14-7	185
BC8	131	CA80	140	CC28	149	DA54	159	DE6	166	E11-9	176	E14-9	186
BC9	131	CA83	140	CC29	149	DA55	159	DE22	166	E11-10	177	E15-9	186
BC20	131	CA84	140	CC30	149	DA56	159	DE23	166	E11-13	177	E17-3	188
BC21	131	CA85	140	CC32	149	DA57	160	DE33	166	E11-15	180	E17-5	186
BC22	131	CA86	140	CC33	149	DA60	160	DE33a	166	E11-19	177	E17-6	186
BC23	131	CA87	141	CC34	150	DA62	160	DE35	166	E11-20	177	E17-7	186
BC24	132	CA88	141	CC35	150	DA63	160	E1-11	167	E11-22	177	E17-9	187
BC25	132	CA90	141	CC37	150	DA64	160	E1-12	167	E11-23	177	E17-10	187
BC26	132	CA91	141	CC42	151	DA68	160	E2-5	167	E11-24	177	E17-15	187
BC27	132	CA92	141	CC43	151	DA70	160	E2-8	167	E11-24a	177	E17-16	188
BC28	132	CA93	141	CC45	152	DA72	160	E2-9	167	E11-25	178	E22-13	188
BC29	132	CA94	141	CC46	152	DA73	160	E2-10	168	E11-25b	178	E22-15	188
BC40	132	CA100	141	CC48	152	DB8	161	E2-15	168	E11-26	178	E25-5	188
BC44	133	CA102	142	CC50	152	DB12	161	E3-4	169	E11-27	178	E25-6	188
BC45	133	CA103	142	CC51	152	DB14	161	E3-5	169	E11-28	178	E26-2	188
BC46	133	CA104	142	CC52	153	DB15	161	E3-29	170	E11-29	178	E27-6	188
BC54	134	CA105	142	CC53	153	DB17	161	E4-3	170	E11-30	178	E27-8	188
BC56	134	CA106	142	CC61	153	DB18	161	E6-1	170	E11-32	180	E29-1	189
BC59	134	CA107	142	CC62	153	DB19	161	E6-9	170	E11-33	178	E30-11	189
BC64	134	CA108	142	CC63	153	DB28	161	E6-14	170	E11-34	178	E31-1	189
BC65	134	CA109	142	CC64	153	DB32	161	E6-19	170	E11-35	181	E31-2	190
BC78	134	CA110	142	CC65	153	DB36	162	E6-20	171	E11-36	181	E31-3	190
BC79	134	CA112	142	CC69	153	DB37	162	E6-27	171	E11-37	181	E45-1	190
BC80	134	CA114	143	CC75	154	DB38	162	E6-31	171	E11-38	181	E45-3	190
CA27	135	CA116	144	CC77	154	DB39	162	E6-36	171	E11-39	179	E45-4	191
CA30	135	CA117	144	CD3a	155	DB39a	162	E6-37	171	E11-40	179	E45-5	191
CA31	135	CA118	144	CD12	155	DB50	162	E6-44	171	E11-40a	179	E45-7	192
CA32	135	CA120	144	CD17	155	DB74	162	E6-49	171	E11-42	179	E50-1	192
CA33	135	CA128	143	CD22	155	DC1	163	E6-52	171	E11-44	181		
CA4	135	CA135	144	CD26	155	DC1a	163	E6-61	172	E11-45	181		
CA34	135	CA156	143	CD50	155	DC2	162	E6-63	172	E11-46	179		
CA34a-h	135	CA160	145	CD51	155	DC3	162	E7-4	172	E11-47	181		
CA35c-i	135	CA166	143	CD52	155	DC5	162	E7-5	172	E11-48	181		
CA35j-r	136	CA167	143	CD53	155	DC5a-b	162	E7-6	172	E11-49	181		
CA36	136	CA175	143	CD58	155	DC6	163	E7-7	172	E11-51	179		
CA44	136	CA176	143	CD59	155	DC7	163	E7-9	172	E11-53	179		
CA45	136	CA183	143	DA1	156	DC7a	163	E7-10	172	E11-54	179		
CA46	137	CB9	145	DA2	156	DC8	163	E7-11	174	E11-64	181		
CA47	137	CB10	146	DA3	156	DC8a	163	E7-18	174	E11-66	179		

XI 20

1. TYPE No. CROSS INDEX

IN TYPE NUMBER SEQUENCE

TYPE No.	MFRS	Pg&Line
8T32NA	♦SIC	56 - 50
8T33NA	♦SIC	56 - 51
8T35NA	♦SIC	56 - 52
8T36NA	♦SIC	56 - 53
8T100	MULB	17 - 22
PHIN	♦SIC	
8T101	MULB	17 - 23
PHIN	SIC	
8T110F	MULB	49 - 7
PHIN	SIC	
8T111F	MULB	49 - 8
PHIN	SIC	
25LS138JC	RTN	46 - 64
25LS138JM	RTN	46 - 65
25LS138WC	RTN	46 - 66
25LS138WM	RTN	46 - 67
25LS139JC	RTN	46 - 97
25LS139JM	RTN	46 - 98
25LS139WC	RTN	46 - 99
25LS139WM	RTN	46 -100
25LS151JC	RTN	42 - 41
25LS151JM	RTN	42 - 42
25LS151WC	RTN	42 - 43
25LS151WM	RTN	42 - 44
25LS153JC	RTN	43 - 51
25LS153JM	RTN	43 - 52
25LS153WC	RTN	43 - 53
25LS153WM	RTN	43 - 54
25LS157JC	RTN	44 - 10
25LS157JM	RTN	44 - 11
25LS157WC	RTN	44 - 12
25LS157WM	RTN	44 - 13
25LS158JC	RTN	44 - 14
25LS158JM	RTN	44 - 15
25LS158WC	RTN	44 - 16
25LS158WM	RTN	44 - 17
25LS251JC	RTN	42 - 45
25LS251JM	RTN	42 - 46
25LS251WC	RTN	42 - 47
25LS251WM	RTN	42 - 48
25LS253JC	RTN	43 - 55
25LS253JM	RTN	43 - 56
25LS253WC	RTN	43 - 57
25LS253WM	RTN	43 - 58
25LS257JC	RTN	44 - 18
25LS257JM	RTN	44 - 19
25LS257WC	RTN	44 - 20
25LS257WM	RTN	44 - 21
25LS258JC	RTN	44 - 22
25LS258JM	RTN	44 - 23
25LS258WC	RTN	44 - 24
25LS258WM	RTN	44 - 25
54F04DM	FSC	11 - 90
54F04FM	FSC	11 - 91
54LS04BL	RTN	11 - 97
54LS04CH	♦RTN	11 - 98
54LS04J	RTN	11 - 99
54LS04W	RTN	11 -100
54LS05BL	RTN	11 -101
54LS05CH	RTN	11 -102
54LS05J	RTN	11 -103
54LS05W	RTN	11 -104
54LS13J	RTN	55 - 36
54LS13W	RTN	55 - 37
54LS14J	RTN	55 - 45
54LS14W	RTN	55 - 46
54LS28CH	RTN	15 - 21
54LS28J	RTN	15 - 22
54LS28W	RTN	15 - 23
54LS33CH	RTN	15 - 24
54LS33J	RTN	15 - 25
54LS33W	RTN	15 - 26
54LS37CH	RTN	13 -109
54LS37J	RTN	13 -110
54LS37W	RTN	14 - 1
54LS38CH	RTN	14 - 2
54LS38J	RTN	14 - 3
54LS38W	RTN	14 - 4
54LS40CH	RTN	13 - 78
54LS40J	RTN	13 - 79
54LS40W	RTN	13 - 80
54LS125DM	♦FSC	14 - 46
54LS125FM	♦FSC	14 - 47
54LS125J	RTN	14 - 48
54LS125W	RTN	14 - 49
54LS126J	RTN	11 - 86
54LS126W	RTN	11 - 87
54LS132DM	♦FSC	55 - 24
54LS132FM	♦FSC	55 - 25
54LS132J	RTN	55 - 41
54LS132W	RTN	55 - 42
54LS138CH	RTN	46 - 68
54LS138J	RTN	46 - 69
54LS138W	RTN	46 - 70
54LS139CH	RTN	46 -101
54LS139J	RTN	46 -102
54LS139W	RTN	46 -103
54LS145DM	♦FSC	25 - 53
54LS145FM	♦FSC	25 - 54
54LS151J	RTN	42 - 49
54LS151W	RTN	42 - 50
54LS152J	RTN	42 - 51
54LS152W	RTN	42 - 52
54LS153BL	RTN	43 - 59
54LS153CH	RTN	43 - 60
54LS153J	RTN	43 - 61
54LS153W	RTN	43 - 62
54LS155CH	RTN	46 -104
54LS155J	♦RTN	46 -105
54LS155W	♦RTN	46 -106
54LS156CH	RTN	46 -107
54LS156J	♦RTN	46 -108
54LS156W	♦RTN	46 -109
54LS157CH	RTN	44 - 26

TYPE No.	MFRS	Pg&Line
54LS157J	♦RTN	44 - 27
54LS157W	♦RTN	44 - 28
54LS158CH	RTN	44 - 29
54LS158J	♦RTN	44 - 30
54LS158W	♦RTN	44 - 31
54LS242DM	FSC	50 - 30
54LS242FM	FSC	50 - 31
54LS243DM	FSC	50 - 32
54LS243FM	FSC	50 - 33
54LS248DM	FSC	25 - 68
54LS248FM	FSC	25 - 69
54LS249DM	FSC	25 - 70
54LS249FM	FSC	25 - 71
54LS251BL	RTN	42 - 53
54LS251J	♦RTN	42 - 54
54LS251W	♦RTN	42 - 55
54LS253BL	RTN	43 - 63
54LS253CH	RTN	43 - 64
54LS253J	♦RTN	43 - 65
54LS253W	♦RTN	43 - 66
54LS255CH	RTN	46 -110
54LS255J	RTN	47 - 1
54LS255W	RTN	47 - 2
54LS257CH	RTN	44 - 32
54LS257J	♦RTN	44 - 33
54LS257W	♦RTN	44 - 34
54LS258CH	RTN	44 - 35
54LS258J	♦RTN	44 - 36
54LS258W	♦RTN	44 - 37
54LS298J	RTN	44 - 38
54LS298W	RTN	44 - 39
54LS365DM	FSC	14 - 63
54LS365FM	FSC	14 - 64
54LS365J	RTN	14 - 65
54LS365W	RTN	14 - 66
54LS366DC	FSC	11 -105
54LS366DM	FSC	11 -106
54LS366FC	FSC	11 -107
54LS366FM	FSC	11 -108
54LS366J	RTN	11 -109
54LS366PC	FSC	11 -110
54LS366W	RTN	12 - 1
54LS367DM	FSC	14 - 67
54LS367FM	FSC	14 - 68
54LS367J	RTN	14 - 69
54LS367W	RTN	14 - 70
54LS368DM	FSC	12 - 2
54LS368FM	FSC	12 - 3
54LS368J	RTN	12 - 4
54LS368W	RTN	12 - 5
54LS399DM	FSC	44 - 40
54LS399FM	FSC	44 - 41
54LS502DM	FSC	60 - 55
54LS502FM	FSC	60 - 56
54LS503DM	FSC	60 - 57
54LS503FM	FSC	60 - 58
54LS504DM	FSC	60 - 59
54LS504FM	FSC	60 - 60
54LS540DM	FSC	17 - 93
54LS540FM	FSC	17 - 94
54LS541DM	FSC	17 - 95
54LS541FM	FSC	17 - 96
54S240DM	FSC	17 - 79
54S240FM	FSC	17 - 80
54S241DM	FSC	17 - 81
54S241FM	FSC	17 - 82
54S251DM	FSC	43 - 14
54S251FM	FSC	43 - 15
54S257DM	FSC	45 - 8
54S257FM	FSC	45 - 9
54SC137C	♦STX	46 - 3
54SC138C	♦STX	46 - 4
54SC139C	♦STX	46 - 28
54SC237C	♦STX	46 - 5
54SC238C	♦STX	46 - 6
54SC239C	♦STX	46 - 29
54SC240C	♦STX	16 - 39
54SC241C	♦STX	16 - 40
54SC242C	♦STX	50 - 5
54SC243C	♦STX	50 - 6
54SC244C	♦STX	16 - 41
54SC245C	♦STX	50 - 7
54SC540C	♦STX	16 - 42
54SC541C	♦STX	16 - 43
55S20DM	♦FSC	51 - 61
55S24DM	♦FSC	53 - 17
55S234DM	♦FSC	53 - 18
57LS300N	MMI	55 - 69
57LS301N	MMI	55 - 70
57LS304N	MMI	55 - 71
57LS305J	♦MMI	55 - 72
57LS306N	MMI	17 -101
57LS307N	MMI	55 - 73
57LS310J	♦MMI	55 - 74
57S300N	MMI	55 - 75
57S301N	MMI	55 - 76
57S304N	MMI	55 - 77
57S306N	MMI	17 - 90
57S307N	MMI	55 - 78
67LS300J	MMI	55 - 79
67LS300N	MMI	55 - 80
67LS301J	MMI	55 - 81
67LS301N	MMI	55 - 82
67LS304J	MMI	55 - 83
67LS304N	MMI	55 - 84
67LS305J	♦MMI	55 - 85
67LS305N	♦MMI	55 - 86
67LS306J	MMI	17 -102
67LS306N	MMI	17 -103
67LS307J	MMI	55 - 87
67LS307N	MMI	55 - 88
67LS310J	♦MMI	55 - 89
67LS310N	♦MMI	55 - 90
67S300J	MMI	55 - 91

TYPE No.	MFRS	Pg&Line
67S300N	MMI	55 - 92
67S301J	MMI	55 - 93
67S301N	MMI	55 - 94
67S304J	MMI	55 - 95
67S304N	MMI	55 - 96
67S306J	MMI	17 - 91
67S306N	MMI	17 - 92
67S307J	MMI	55 - 97
67S307N	MMI	55 - 98
74F04FC	FSC	11 - 92
74F04PC	FSC	11 - 93
74H04FC	FSC	12 - 6
74H05FC	FSC	12 - 7
74H40FC	FSC	13 - 81
74LS04FC	FSC	12 - 8
74LS04J	RTN	13 - 8
74LS04W	RTN	13 - 9
74LS05FC	FSC	12 - 9
74LS05J	RTN	13 - 14
74LS05W	RTN	13 - 15
74LS13FC	♦FSC	55 - 27
74LS13J	RTN	55 - 38
74LS13W	RTN	55 - 39
74LS14FC	FSC	55 - 30
74LS14J	RTN	55 - 47
74LS14W	RTN	55 - 48
74LS28FC	FSC	15 - 36
74LS28J	RTN	15 - 37
74LS28W	RTN	15 - 38
74LS33J	RTN	15 - 39
74LS33W	RTN	15 - 40
74LS37J	RTN	14 - 38
74LS37W	RTN	14 - 39
74LS38J	RTN	14 - 40
74LS38W	RTN	14 - 41
74LS40FC	FSC	13 -102
74LS40J	RTN	13 -103
74LS40W	RTN	13 -104
74LS47FC	♦FSC	25 - 72
74LS48FC	♦FSC	25 - 73
74LS49FC	♦FSC	25 - 74
74LS125AFC	FSC	14 - 50
74LS125DC	♦FSC	14 - 51
74LS125FC	♦FSC	14 - 52
74LS125J	RTN	14 - 56
74LS125PC	FSC	14 - 53
74LS125W	RTN	14 - 57
74LS126FC	FSC	14 - 58
74LS126J	RTN	11 - 88
74LS126W	RTN	11 - 89
74LS132FC	♦FSC	55 - 26
74LS132J	RTN	55 - 43
74LS132W	RTN	55 - 44
74LS138FC	♦FSC	46 - 74
74LS138J	RTN	46 - 75
74LS138W	RTN	46 - 76
74LS139FC	♦FSC	47 - 8
74LS139J	RTN	47 - 9
74LS139W	RTN	47 - 10
74LS145DC	♦FSC	25 - 55
74LS145FC	♦FSC	25 - 56
74LS145PC	♦FSC	25 - 57
74LS151FC	♦FSC	42 - 61
74LS151J	RTN	42 - 62
74LS151W	RTN	42 - 63
74LS152FC	♦FSC	42 - 64
74LS152J	RTN	42 - 65
74LS152W	RTN	42 - 66
74LS153FC	♦FSC	43 - 67
74LS153J	RTN	43 - 72
74LS153W	RTN	43 - 73
74LS155FC	♦FSC	47 - 11
74LS155J	RTN	47 - 12
74LS155W	RTN	47 - 13
74LS156FC	♦FSC	47 - 3
74LS156J	RTN	47 - 14
74LS156W	RTN	47 - 15
74LS157FC	♦FSC	44 - 52
74LS157J	RTN	44 - 53
74LS157W	RTN	44 - 54
74LS158FC	♦FSC	44 - 55
74LS158J	RTN	44 - 56
74LS158W	RTN	44 - 57
74LS240FC	♦FSC	17 - 83
74LS241FC	♦FSC	17 - 84
74LS242FC	♦FSC	50 - 38
74LS243FC	♦FSC	50 - 39
74LS244FC	♦FSC	17 - 85
74LS245FC	♦FSC	50 - 97
74LS247FC	♦FSC	25 - 75
74LS248FC	FSC	25 - 76
74LS249FC	FSC	25 - 77
74LS251FC	♦FSC	42 - 56
74LS251J	RTN	42 - 67
74LS251W	RTN	42 - 68
74LS253FC	♦FSC	43 - 68
74LS253J	RTN	43 - 74
74LS253W	RTN	43 - 75
74LS255J	RTN	47 - 16
74LS255W	RTN	47 - 17
74LS257FC	♦FSC	44 - 42
74LS257J	RTN	44 - 58
74LS257W	RTN	44 - 59
74LS258AFC	♦FSC	45 - 33
74LS258FC	FSC	44 - 43
74LS258J	RTN	44 - 60
74LS258W	RTN	44 - 61
74LS298FC	♦FSC	44 - 44
74LS298J	RTN	44 - 62
74LS298W	RTN	44 - 63
74LS347FC	FSC	25 - 78
74LS352FC	♦FSC	43 - 76
74LS353FC	♦FSC	43 - 77
74LS365AFC	♦FSC	14 - 98

TYPE No.	MFRS	Pg&Line
74LS365DC	FSC	14 - 71
74LS365FC	FSC	14 - 72
74LS365J	RTN	14 - 99
74LS365PC	FSC	14 - 73
74LS365W	RTN	14 -100
74LS366AFC	♦FSC	13 - 16
74LS366DC	FSC	11 - 94
74LS366FC	FSC	11 - 95
74LS366J	RTN	13 - 17
74LS366PC	FSC	11 - 96
74LS366W	RTN	13 - 18
74LS367AFC	♦FSC	14 -101
74LS367DC	FSC	14 - 74
74LS367FC	FSC	14 - 75
74LS367J	RTN	14 -102
74LS367PC	FSC	14 - 76
74LS367W	RTN	14 -103
74LS368AFC	♦FSC	13 - 19
74LS368DC	FSC	12 - 10
74LS368FC	FSC	12 - 11
74LS368J	RTN	13 - 20
74LS368PC	FSC	12 - 12
74LS368W	RTN	13 - 21
74LS398PC	FSC	44 - 45
74LS399DC	FSC	44 - 46
74LS399FC	FSC	44 - 47
74LS399PC	FSC	44 - 48
74LS447FC	FSC	25 - 79
74LS502FC	♦FSC	60 - 61
74LS503FC	FSC	60 - 62
74LS504FC	FSC	60 - 63
74LS540FC	♦FSC	17 - 97
74LS541FC	♦FSC	17 - 98
74S04AFC	FSC	13 - 22
74S04FC	FSC	13 - 23
74S05AFC	FSC	13 - 24
74S05FC	FSC	13 - 25
74S40FC	FSC	13 -105
74S132FC	FSC	55 - 17
74S137FC	FSC	46 - 78
74S138FC	FSC	46 - 79
74S139FC	FSC	47 - 52
74S140FC	FSC	16 - 99
74S151FC	FSC	43 - 16
74S153FC	FSC	44 - 1
74S157FC	FSC	45 - 10
74S158FC	FSC	45 - 11
74S240FC	FSC	17 - 86
74S241FC	FSC	17 - 87
74S251DC	FSC	43 - 17
74S251FC	FSC	43 - 18
74S251PC	FSC	43 - 19
74S253FC	FSC	44 - 2
74S257FC	FSC	45 - 12
74S258FC	FSC	45 - 13
75S20DC	FSC	51 - 62
75S20PC	FSC	51 - 63
75S24DC	FSC	53 - 19
75S24PC	FSC	53 - 20
75S108A	MULB	48 - 77
PHIN	SIC	
75S207A	MULB	53 - 43
PHIN	SIC	
75S208A	MULB	53 - 44
PHIN	SIC	
75S234DC	♦FSC	53 - 21
75S234PC	♦FSC	53 - 22
93L09FC	♦FSC	43 - 78
93L11FC	FSC	46 - 80
93L12FC	♦FSC	42 - 69
93L18FC	FSC	60 - 31
93L21FC	FSC	47 - 18
93L22FC	♦FSC	44 - 64
93S12FC	FSC	43 - 20
96LS32FC	FSC	61 - 13
304CL	TSC	11 - 72
350AJ	TSC	42 - 10
350BL	TSC	42 - 8
350CJ	TSC	42 - 9
350ML	TSC	42 - 11
351AJ	TSC	42 - 13
351BL	TSC	42 - 12
351ML	TSC	42 - 14
361BL	TSC	31 - 77
361ML	TSC	31 - 78
362BL	TSC	31 - 84
362ML	TSC	31 - 85
363BL	TSC	31 - 79
363ML	TSC	31 - 80
367BL	TSC	55 - 11
367ML	TSC	55 - 12
368BL	TSC	55 - 13
368ML	TSC	55 - 14
380BL	TSC	24 - 30
380ML	TSC	24 - 31
381BL	TSC	24 - 32
381ML	TSC	24 - 33
382BL	TSC	24 - 34
382ML	TSC	24 - 35
816-50-A1	♦BECK	56 - 6
816-50-A2	♦BECK	56 - 7
816-50-B1	♦BECK	56 - 8
816-50-B2	♦BECK	56 - 9
816-55-A1	♦BECK	56 - 10
816-55-A2	♦BECK	56 - 11
816-55-B1	♦BECK	56 - 12
816-55-B2	♦BECK	56 - 13
883/4050	none	31 - 9
1408AG	♦PMI	28 - 78
1513C-16/1-01	TMI	61 - 18
1513C-36/1-01	TMI	61 - 19
1513C-1601	TMI	61 - 20
1513C-160212	TMI	61 - 21
1513C-160312H	TMI	61 - 22

TYPE No.	MFRS	Pg&Line
1513C-160612HP		61 - 23
	TMI	
1513M-16/1-01	TMI	61 - 24
1513M-16/1-01-883		
	TMI	61 - 25
1513M-36/1-01	TMI	61 - 26
1513M-36/1-01-883		
	TMI	61 - 27
1513M-160712HP833		
	TMI	61 - 28
1513M-161112HP833		
	TMI	61 - 29
2502C/D	INL	60 - 64
2502CJE	INL	60 - 65
2502CPE	INL	60 - 66
2502M/D	INL	60 - 67
2502MJE	INL	60 - 68
2503C/D	INL	60 - 69
2503CJE	INL	60 - 70
2503CPE	INL	60 - 71
2503M/D	INL	60 - 72
2503MJE	INL	60 - 73
2504C/D	INL	60 - 74
2504CJG	INL	60 - 75
2504CPE	INL	60 - 76
2504M/D	INL	60 - 77
2504MJG	INL	60 - 78
2637I	SIC	56 - 3
2637N	SIC	59 - 49
2671I	♦SIC	56 - 62
2671N	♦SIC	56 - 63
2672I	♦SIC	56 - 54
2672N	♦SIC	56 - 55
2673I	♦SIC	56 - 56
2673N	♦SIC	56 - 57
2678I	♦SIC	56 - 4
2678N	♦SIC	56 - 5
2905FM	♦MMI	50 - 17
2905JC	♦MMI	50 - 18
2905JM	♦MMI	50 - 19
2905NC	♦MMI	50 - 20
2906FM	♦MMI	50 - 21
2906JC	♦MMI	50 - 22
2906JM	♦MMI	50 - 23
2906NC	♦MMI	50 - 24
2907FM	♦MMI	50 - 25
2907JC	♦MMI	50 - 26
2907JM	♦MMI	50 - 27
2907NC	♦MMI	50 - 28
2910	ITL	59 - 57
2911	♦ITL	59 - 58
3207A-1F	MULB	19 - 3
PHIN	♦SIC	
3207AF	MULB	19 - 4
PHIN	♦SIC	
4140	TPN	27 - 15
4141	TPN	27 - 48
4142	TPN	27 - 59
4143-01	TPN	27 - 16
4143-02	TPN	27 - 17
4143-83	TPN	27 - 40
4144-01	TPN	27 - 49
4144-02	TPN	27 - 50
4144-83	TPN	27 - 52
4145-01	TPN	27 - 60
4145-02	TPN	27 - 61
4146-01	TPN	27 - 96
4146-02	TPN	27 - 97
4189	♦TPN	27 - 81
4189-83	♦TPN	27 - 82
4551	TPN	41 - 53
4551-01	TPN	41 - 54
5518	♦DTC	11 - 83
5518A	♦DTC	11 - 84
5524DM	FSC	52 - 47
5524FM	FSC	52 - 48
5525DM	FSC	51 - 80
5525FM	FSC	51 - 81
5528FM	FSC	52 - 49
5529DM	FSC	51 - 82
5529FM	FSC	51 - 83
5534DM	FSC	52 - 50
5534FM	FSC	52 - 51
5535DM	FSC	51 - 84
5535FM	FSC	51 - 85
5538DM	FSC	52 - 52
5538FM	FSC	52 - 53
5539DM	FSC	51 - 86
5539FM	FSC	51 - 87
5550	♦DTC	17 - 27
5551	♦DTC	49 - 11
5551A	♦DTC	49 - 12
5551B	♦DTC	49 - 13
5551C	♦DTC	49 - 14
5566	DTC	42 - 1
5567	♦DTC	42 - 2
6605CJ	♦TSC	50 - 61
6605CL	♦TSC	50 - 62
7404FC	FSC	12 - 13
7405FC	FSC	12 - 14
7406FC	FSC	12 - 15
7407FC	FSC	14 - 77
7413FC	♦FSC	55 - 28
7414FC	FSC	55 - 31
7416FC	FSC	12 - 16
7417FC	FSC	14 - 78
7437FC	FSC	14 - 5
7438FC	FSC	14 - 6
7439FC	FSC	14 - 7
7440FC	FSC	13 - 82
7445FC	FSC	25 - 58
7446AFC	FSC	25 - 80
7447AFC	FSC	25 - 81
7448FC	FSC	25 - 82

INTERFACE

1. TYPE No. CROSS INDEX

IN TYPE NUMBER SEQUENCE

TYPE No.	MFRS	Pg&Line
7460	♦OEI	56 - 14
7461	♦OEI	56 - 15
7510G	PMI	33 - 1
7510N	PMI	33 - 2
7511G	PMI	33 - 4
7511N	PMI	33 - 5
7520B	♦MULB	51 - 42
PHIN	♦SIC	
7520PC	TUNH	51 - 5
7521PC	TUNH	51 - 3
7522B	♦MULB	51 - 43
PHIN	♦SIC	
7522PC	TUNH	51 - 6
7523PC	TUNH	51 - 4
7524B	♦MULB	52 - 71
PHIN	♦SIC	
7524DC	FSC	52 - 72
7524PC	FSC	52 - 73
	TUNH	
7525DC	FSC	51 - 88
7525PC	FSC	51 - 89
	TUNH	
7528DC	FSC	52 - 74
7529DC	FSC	51 - 90
7529PC	FSC	51 - 91
	TUNH	
7532F	PHIN	52 - 75
	SIC	
7532N	PHIN	52 - 76
	SIC	
7534DC	FSC	52 - 77
7534F	PHIN	52 - 78
	SIC	
7534N	PHIN	52 - 79
	SIC	
7534PC	FSC	52 - 80
	TUNH	
7535DC	FSC	51 - 92
7535PC	FSC	51 - 93
	TUNH	
7538DC	FSC	52 - 81
7538PC	FSC	52 - 82
7539DC	FSC	51 - 94
7539PC	FSC	51 - 95
7541C	♦BECK	29 - 99
7541M	♦BECK	29 -100
7545C	♦BECK	30 - 20
7545M	♦BECK	30 - 21
7546C	BECK	30 - 26
7546M	BECK	30 - 27
7555C	♦BECK	27 - 76
7555M	♦BECK	27 - 77
7556CB	♦BECK	27 - 72
7556CU	♦BECK	27 - 73
7556MB	♦BECK	27 - 74
7556MU	♦BECK	27 - 75
7580I	♦BECK	29 -101
7580V	♦BECK	29 -103
7580VS	♦BECK	29 -102
7581C	♦BECK	29 - 98
8751CJ	♦TSC	27 - 5
8751CN	♦TSC	27 - 6
9009FC	♦FSC	17 - 34
9016FC	FSC	13 - 10
9017DC	FSC	13 - 11
9017DM	FSC	13 - 12
9017FC	FSC	13 - 13
9307FC	FSC	25 - 28
9309FC	♦FSC	43 - 86
9311FC	FSC	46 - 81
9312FC	♦FSC	42 - 77
9313FC	♦FSC	42 - 78
9317BFC	FSC	25 - 98
9317CFC	FSC	25 - 99
9318FC	FSC	60 - 32
9321FC	FSC	47 - 21
9322FC	♦FSC	44 - 71
9368DM	FSC	24 - 86
9612AHM	♦FSC	16 - 94
9612ARM	♦FSC	16 - 95
9612EHC	♦FSC	16 - 90
9612ERC	♦FSC	16 - 91
9612ETC	♦FSC	16 - 92
9612HC	♦FSC	16 - 96
9612RC	♦FSC	16 - 97
9612TC	♦FSC	16 - 98
9613HC	♦FSC	48 - 60
9613HM	♦FSC	48 - 61
9613RC	♦FSC	48 - 62
9613RM	♦FSC	48 - 63
9613TC	♦FSC	48 - 64
9616FM	♦FSC	17 - 64
9617DC	♦FSC	49 - 30
9617PC	♦FSC	49 - 31
9620DC	♦FSC	48 - 49
9620DM	♦FSC	48 - 50
9620FM	♦FSC	48 - 51
9620PC	♦FSC	48 - 52
9621DC	♦FSC	17 - 32
9621DM	♦FSC	17 - 30
9621FM	♦FSC	17 - 31
9621PC	♦FSC	17 - 33
9622DC	♦FSC	48 - 69
9622DM	♦FSC	48 - 70
9622FM	♦FSC	48 - 71
9622PC	♦FSC	48 - 72
9624DC	♦FSC	31 - 81
9624DM	♦FSC	31 - 82
9624FM	♦FSC	32 - 17
9624PC	♦FSC	31 - 83
9625DC	♦FSC	31 -106
9625DM	♦FSC	31 -107
9625FM	♦FSC	32 - 9
9625PC	♦FSC	31 -108

TYPE No.	MFRS	Pg&Line
9627FM	♦FSC	48 - 59
9634DC	♦FSC	16 -106
9634DM	♦FSC	16 -107
9634FM	♦FSC	16 -108
9634PC	♦FSC	16 -109
9640DC	FSC	50 - 63
9640DM	FSC	50 - 64
9640FM	FSC	50 - 65
9640PC	FSC	50 - 66
9641DC	FSC	50 - 67
9641DC/26S11	FSC	50 - 68
9641DM	FSC	50 - 69
9641DM/26S11	FSC	50 - 70
9641FM	FSC	50 - 71
9641PC	FSC	50 - 72
9641PC/26S11	FSC	50 - 73
9642DC	FSC	50 - 74
9642DM	FSC	50 - 75
9642FM	FSC	50 - 76
9642PC	FSC	50 - 77
9643DC	FSC	31 - 1
9643FM	FSC	31 - 2
9643RC	FSC	31 - 3
9644RC	♦FSC	31 - 4
9644TC	♦FSC	31 - 5
9645DC	FSC	31 - 6
9645PC	FSC	31 - 7
9646DC	FSC	19 - 72
9646DM/0026	♦FSC	19 - 8
9646PC	FSC	19 - 73
9646PC/0026	♦FSC	19 - 9
9664ADC	FSC	24 - 74
9664APC	FSC	24 - 75
9664DC	FSC	24 - 76
9665DC	FSC	21 - 45
10014DM	FSC	58 - 21
10014FC	FSC	58 - 22
10014FM	FSC	58 - 23
10014PC	FSC	58 - 24
10114FC	FSC	48 - 17
10114PC	FSC	48 - 18
10115FC	FSC	48 - 25
10115PC	FSC	48 - 26
10116FC	FSC	48 - 19
10116PC	FSC	48 - 20
10123FC	FSC	16 - 68
10123PC	FSC	16 - 69
10124FC	FSC	31 -104
10124PC	FSC	31 -105
10125FC	FSC	31 -102
10125PC	FSC	31 -103
10134FC	FSC	42 - 20
10134PC	FSC	42 - 21
10161FC	FSC	46 - 46
10161PC	FSC	46 - 47
10162FC	FSC	46 - 48
10162PC	FSC	46 - 49
10164FC	FSC	42 - 15
10164PC	FSC	42 - 16
10165FC	FSC	58 - 17
10165PC	FSC	58 - 18
10171FC	FSC	46 - 53
10171PC	FSC	46 - 54
10172FC	FSC	46 - 55
10172PC	FSC	46 - 56
10173FC	FSC	42 - 39
10173PC	FSC	42 - 40
10174FC	FSC	42 - 29
10174PC	FSC	42 - 30
10192FC	FSC	16 - 63
10192PC	FSC	16 - 64
55107ADM	♦FSC	48 - 78
55107AFM	♦FSC	48 - 79
55107BDM	♦FSC	48 - 80
55107BFM	♦FSC	48 - 81
55108ADM	FSC	48 - 82
55108AFM	FSC	48 - 83
55108BDM	♦FSC	48 - 84
55108BFM	♦FSC	48 - 85
55109DM	♦FSC	16 -110
55109FM	♦FSC	17 - 1
55110ADM	FSC	17 - 2
55110DM	♦FSC	17 - 3
55110FM	♦FSC	17 - 4
55121DM	FSC	16 - 84
55121FM	FSC	16 - 85
55122DM	♦FSC	49 - 18
55122FM	♦FSC	49 - 19
55207DM	FSC	53 - 35
55207FM	FSC	53 - 36
55208DM	FSC	53 - 37
55208FM	FSC	53 - 38
55224DM	FSC	52 - 54
55224FM	FSC	52 - 55
55225DM	FSC	51 - 96
55225FM	FSC	51 - 97
55232DM	FSC	52 - 56
55232FM	FSC	52 - 57
55233DM	FSC	51 - 98
55233FM	FSC	51 - 99
55234DM	FSC	52 - 58
55234FM	FSC	52 - 59
55235DM	FSC	51 -100
55235FM	FSC	51 -101
55238DM	FSC	52 - 83
55238FM	FSC	52 - 60
55239DM	FSC	51 -102
55239FM	FSC	51 -103
55325DM	FSC	20 - 28
55325FM	FSC	20 - 29
55326DM	FSC	20 - 30
55326FM	FSC	20 - 31
55327DM	FSC	20 - 32
55327FM	FSC	20 - 33

TYPE No.	MFRS	Pg&Line
55450ADM	♦FSC	21 - 62
55450AFM	FSC	21 - 63
55450BDM	♦FSC	21 - 64
55450BF	♦MULB	21 - 65
PHIN	♦SIC	
55450BFM	FSC	21 - 66
55450BN	PHIN	21 - 67
	♦SIC	
55451AHM	FSC	21 - 68
55451ARM	♦FSC	21 - 69
55451BHM	FSC	21 - 70
55451BRM	♦FSC	21 - 71
55451BT	♦MULB	21 - 72
PHIN	♦SIC	
55452AHM	FSC	21 - 73
55452ARM	♦FSC	21 - 74
55452BHM	FSC	21 - 75
55452BRM	♦FSC	21 - 76
55452BT	♦MULB	21 - 77
PHIN	♦SIC	
55453AHM	FSC	21 - 78
55453ARM	♦FSC	21 - 79
55453BHM	FSC	21 - 80
55453BRM	♦FSC	21 - 81
55453BT	♦MULB	21 - 82
PHIN	♦SIC	
55454AHM	FSC	21 - 83
55454ARM	FSC	21 - 84
55454BHM	FSC	21 - 85
55454BRM	FSC	21 - 86
55454BT	♦MULB	21 - 87
PHIN	♦SIC	
55460DM	FSC	22 - 34
55460FM	FSC	22 - 35
55461HM	FSC	22 - 12
55461RM	FSC	22 - 13
55462HM	FSC	22 - 14
55462RM	FSC	22 - 15
55463HM	FSC	22 - 16
55463RM	FSC	22 - 17
55464HM	FSC	22 - 18
55464RM	FSC	22 - 19
55470DM	FSC	22 - 59
55470FM	FSC	22 - 60
55471HM	FSC	22 - 36
55471RM	FSC	22 - 37
55472HM	FSC	22 - 38
55472RM	FSC	22 - 39
55473HM	FSC	22 - 40
55473RM	♦FSC	22 - 41
55474HM	FSC	22 - 42
55474RM	FSC	22 - 43
55491ADM	FSC	23 - 41
55491DM	♦FSC	23 - 42
55492ADM	♦FSC	23 - 36
55492DM	FSC	23 - 37
74125FC	FSC	14 - 54
74126FC	FSC	14 - 55
74132FC	FSC	55 - 29
74145FC	FSC	25 - 59
74150FC	FSC	43 - 35
74151AFC	FSC	42 - 79
74152AFC	♦FSC	42 - 80
74153FC	FSC	43 - 87
74154FC	FSC	46 - 82
74155FC	FSC	47 - 22
74156FC	FSC	47 - 23
74157FC	FSC	44 - 72
74298FC	♦FSC	44 - 73
75108ADC	♦FSC	48 - 86
75108APC	FSC	48 - 87
	TUNH	
75108BDC	♦FSC	48 - 88
75109DC	♦FSC	17 - 5
75109PC	♦FSC	17 - 6
	TUNH	
75110DC	♦FSC	17 - 7
75110PC	♦FSC	17 - 8
	TUNH	
75112DC	♦FSC	17 - 9
75112PC	♦FSC	17 - 10
75121DC	♦FSC	16 - 86
75121PC	♦FSC	16 - 87
	TUNH	
75122DC	♦FSC	49 - 20
75122PC	♦FSC	49 - 21
	TUNH	
75123DC	♦FSC	16 -100
75123PC	♦FSC	16 -101
	TUNH	
75124DC	♦FSC	49 - 22
75124PC	♦FSC	49 - 23
	TUNH	
75150DC	♦FSC	17 - 49
75150PC	♦FSC	17 - 50
	TUNH	
75150RC	♦FSC	17 - 51
75154DC	♦FSC	49 - 48
75207DC	♦FSC	53 - 39
75207PC	♦FSC	53 - 40
	TUNH	
75208DC	♦FSC	53 - 41
75208PC	♦FSC	53 - 42
	TUNH	
75224DC	FSC	52 - 84
75224PC	FSC	52 - 85
75225DC	FSC	51 -104
75225PC	FSC	51 -105
75232DC	FSC	52 - 86
75232PC	FSC	52 - 87
75233DC	FSC	51 -106
75233PC	FSC	51 -107
75234DC	FSC	52 - 88

TYPE No.	MFRS	Pg&Line
75234PC	FSC	52 - 89
	TUNH	
75235DC	FSC	51 -108
75235PC	FSC	51 -109
	TUNH	
75238DC	FSC	52 - 90
75238PC	FSC	52 - 91
75239DC	FSC	51 -110
75239PC	FSC	52 - 1
75324A	♦MULB	20 - 18
PHIN	♦SIC	
75325DC	♦FSC	20 - 34
75325PC	♦FSC	20 - 35
	TUNH	
75326DC	♦FSC	20 - 36
75326PC	♦FSC	20 - 37
75327DC	♦FSC	20 - 38
75327PC	♦FSC	20 - 39
75361AF	♦MULB	32 - 18
PHIN	SIC	
75361AV	♦MULB	32 - 19
PHIN	SIC	
75450ADC	♦FSC	21 - 88
75450APC	♦FSC	21 - 89
	TUNH	
75450BA	♦MULB	21 - 90
PHIN	♦SIC	
75450BDC	♦FSC	21 - 91
75450BPC	FSC	21 - 92
75451AHC	FSC	21 - 93
75451ARC	♦FSC	21 - 94
75451BHC	FSC	21 - 95
75451BRC	♦FSC	21 - 96
75451BV	♦MULB	21 - 97
PHIN	♦SIC	
75452AHC	FSC	21 - 98
75452ARC	♦FSC	21 - 99
75452BHC	FSC	21 -100
75452BRC	♦FSC	21 -101
75452BV	MULB	21 -102
PHIN	♦SIC	
75453AHC	FSC	21 -103
75453ARC	♦FSC	21 -104
75453BHC	FSC	21 -105
75453BRC	♦FSC	21 -106
75453BV	MULB	21 -107
PHIN	♦SIC	
75454AHC	FSC	21 -108
75454ARC	FSC	21 -109
75454ATC	FSC	21 -110
75454BHC	FSC	22 - 1
75454BRC	FSC	22 - 2
75454BTC	FSC	22 - 3
75454BV	MULB	22 - 4
PHIN	♦SIC	
75460DC	♦FSC	22 - 44
75460PC	♦FSC	22 - 45
	TUNH	
75461HC	FSC	22 - 20
75461RC	♦FSC	22 - 21
75462HC	FSC	22 - 22
75462RC	♦FSC	22 - 23
75463HC	FSC	22 - 24
75463RC	♦FSC	22 - 25
75463TC	FSC	22 - 26
75464HC	♦FSC	22 - 27
75464RC	♦FSC	22 - 28
75464TC	♦FSC	22 - 29
75470DC	♦FSC	22 - 61
75470PC	♦FSC	22 - 62
75471HC	♦FSC	22 - 46
75471RC	FSC	22 - 47
75472HC	♦FSC	22 - 48
75472RC	FSC	22 - 49
75473HC	♦FSC	22 - 50
75473RC	♦FSC	22 - 51
75473TC	♦FSC	22 - 52
75474HC	♦FSC	22 - 53
75474RC	FSC	22 - 54
75474TC	FSC	22 - 55
75491ADC	FSC	23 - 43
75491APC	FSC	23 - 44
75491DC	FSC	23 - 45
75492ADC	FSC	23 - 38
75492APC	FSC	23 - 39
75492DC	FSC	23 - 40
96103FC	FSC	50 - 58
96103FM	FSC	50 - 59
96103PC	FSC	50 - 60
96106FC	FSC	49 - 41
100123D	RTCF	none
	SIC	
Repl.by HXA100123D Cur.		
100123F	RTCF	none
	SIC	
Repl.by HXA100123F Cur.		
100155D	RTCF	none
	SIC	
Repl.by HXA100155D Cur.		
100155F	RTCF	none
	SIC	
Repl.by HXA100155F Cur.		
100163DC	FSC	42 - 32
100163FC	FSC	42 - 33
100164DC	FSC	42 - 18
100164FC	FSC	42 - 19
100165D	RTCF	none
	♦SIC	
Repl.by HXA100165D Cur.		
100165DC	FSC	58 - 19
100165F	RTCF	none
	♦SIC	
Repl.by HXA100165F Cur.		
100165FC	FSC	58 - 20

TYPE No.	MFRS	Pg&Line
100170DC#1	FSC	46 - 44
100170DC#2	FSC	46 - 51
100170FC#1	FSC	46 - 45
100170FC#2	FSC	46 - 52
100171DC	FSC	42 - 35
100171FC	FSC	42 - 36
AD02-883AW	♦PMI	27 - 66
AD02-883W	♦PMI	27 - 67
AD02AW	♦PMI	27 - 68
AD02CW	♦PMI	27 - 69
AD02EW	♦PMI	27 - 70
AD02W	♦PMI	27 - 71
AD550JD	ANA	60 - 79
AD550JF	ANA	60 - 80
AD550KD	ANA	60 - 81
AD550KF	ANA	60 - 82
AD550LD	ANA	60 - 83
AD550LF	ANA	60 - 84
AD550SD	ANA	60 - 85
AD550SF	ANA	60 - 86
AD550TD	ANA	60 - 87
AD550TF	ANA	60 - 88
AD550UD	ANA	60 - 89
AD550UF	ANA	60 - 90
AD553JD	ANA	60 - 91
AD553KD	ANA	60 - 92
AD553LD	ANA	60 - 93
AD553SD	ANA	60 - 94
AD553SF	ANA	60 - 95
AD553TD	ANA	60 - 96
AD553TF	ANA	60 - 97
AD553UD	ANA	60 - 98
AD553UF	ANA	60 - 99
AD555JD	♦ANA	60 -100
AD555JF	♦ANA	60 -101
AD555KD	♦ANA	60 -102
AD555KF	♦ANA	60 -103
AD555LD	♦ANA	60 -104
AD555LF	♦ANA	60 -105
AD555SD	♦ANA	60 -106
AD555SF	♦ANA	60 -107
AD555TD	♦ANA	60 -108
AD555TF	♦ANA	60 -109
AD555UD	♦ANA	60 -110
AD555UF	♦ANA	61 - 1
AD565SD/883B	none	30 - 65
AD565TD/883B	none	30 - 57
AD566ASD/883B	none	30 - 64
AD566ATD/883B	none	30 - 56
AD573JP	none	27 - 53
AD2020	♦ANA	27 - 7
AD5201A	ANA	27 - 78
AD5201S	ANA	27 - 79
AD5202A	ANA	27 - 80
AD5202S	ANA	27 - 90
AD5204A	ANA	27 - 91
AD5204S	ANA	27 - 92
AD5205A	ANA	27 - 93
AD5205S	ANA	27 - 94
AD7510JD	♦ANA	33 - 20
AD7510JN	♦ANA	33 - 21
AD7510KD	♦ANA	33 - 22
AD7510KN	♦ANA	33 - 23
AD7510SD	♦ANA	33 - 24
AD7511JD	♦ANA	33 - 94
AD7511JN	♦ANA	33 - 95
AD7511KD	♦ANA	33 - 96
AD7511KN	♦ANA	33 - 97
AD7511SD	♦ANA	33 - 98
AD7511TD	♦ANA	33 - 99
AD7512JD	♦ANA	34 - 18
AD7512JN	♦ANA	34 - 19
AD7512KD	♦ANA	34 - 20
AD7512KN	♦ANA	34 - 21
AD7512SD	♦ANA	34 - 22
AD7512TD	♦ANA	34 - 23
AD7520JD⊠	DTL	28 - 2
AD7520JN⊠	DTL	28 - 87
AD7520KD⊠	DTL	28 - 3
AD7520KN⊠	DTL	29 - 22
AD7520LD⊠	DTL	28 - 4
AD7520LN⊠	DTL	28 - 5
AD7520SD⊠	DTL	28 - 6
AD7520TD⊠	DTL	28 - 7
AD7520UD⊠	DTL	28 - 8
AD7521JD⊠	DTL	28 - 9
AD7521JN⊠	DTL	28 - 10
AD7521KD⊠	DTL	28 - 11
AD7521LD⊠	DTL	28 - 12
AD7521LN⊠	DTL	28 - 13
AD7521SD⊠	DTL	28 - 14
AD7521TD⊠	DTL	28 - 15
AD7521UD⊠	DTL	28 - 16
AD7523AD⊠	DTL	28 - 80
AD7523BD⊠	DTL	29 - 19
AD7523CD⊠	DTL	29 - 62
AD7523JN⊠	DTL	28 - 81
AD7523KN⊠	DTL	29 - 20
AD7523LN⊠	DTL	29 - 63
AD7523SD⊠	DTL	28 - 82
AD7523TD⊠	DTL	29 - 21
AD7523UD⊠	DTL	29 - 64
AD7530JD⊠	DTL	28 - 17
AD7530JN⊠	DTL	28 - 18
AD7530KD⊠	DTL	28 - 19
AD7530KN⊠	DTL	28 - 20
AD7530LD⊠	DTL	28 - 21
AD7530LN⊠	DTL	28 - 22
AD7530SD⊠	DTL	28 - 23
AD7530TD⊠	DTL	28 - 24
AD7530UD⊠	DTL	28 - 25
AD7531JD⊠	DTL	28 - 26
AD7531JN⊠	DTL	28 - 27
AD7531KD⊠	DTL	28 - 28

♦-Mfr's data sheet available in microfilm service

Cur-In current D.A.T.A.BOOK
Δ-Registered with JEDEC by this manufacturer

Obs-In this book

1. TYPE No. CROSS INDEX

IN TYPE NUMBER SEQUENCE

TYPE No.	MFRS	Pg&Line
AD7531KNØ	DTL	28 - 29
AD7531LDØ	DTL	28 - 30
AD7531SDØ	DTL	28 - 31
AD7531TDØ	DTL	28 - 32
AD7531UDØ	DTL	28 - 33
AD7533ADØ	DTL	28 - 89
AD7533BDØ	DTL	29 - 23
AD7533CDØ	DTL	29 - 68
AD7533JNØ	DTL	28 - 90
AD7533KNØ	DTL	29 - 24
AD7533LNØ	DTL	29 - 69
AD7533SDØ	DTL	28 - 91
AD7533TDØ	DTL	29 - 25
AD7533UDØ	DTL	29 - 70
AD7541LNØ	♦DTL	28 - 34
AD7542GKN	none	30 - 60
AD7543SD/883B	none	30 - 66
AD7543TD/883B	none	30 - 61
AD7550	♦ANA	27 - 95
ADC12DM	DTL	27 - 54
ADC586-8	♦HBC	27 - 33
ADC586-10	♦HBC	27 - 47
ADC586-12	♦HBC	27 - 55
ADC1210-10-1	DDC	56 - 32
ADC1210-10-3	DDC	56 - 33
ADC1210-12-1	DDC	56 - 34
ADC1210-12-3	DDC	56 - 35
ADC7109C	♦DTL	27 - 62
ADC7109M	♦DTL	27 - 63
ADC7109R	♦DTL	27 - 64
ADC8068AC/ADC7104-14C	♦DTL	27 -100
ADC8068AC/ADC7104-16C	♦DTL	27 -103
ADC-815BGC	DTL	27 - 21
ADC-815BMC	DTL	27 - 22
ADC-815BMM	DTL	27 - 23
ADC-815BMR	DTL	27 - 24
ADC-825BGC	DTL	27 - 25
ADC-825BMC	DTL	27 - 26
ADC-825BMM	DTL	27 - 27
ADC-825BMR	DTL	27 - 28
ADC-M15	♦DDC	27 - 99
ADC-TV8B	DTL	27 - 20
ADDAC80Z10	♦ANA	27 - 51
ADDAC80Z12	♦ANA	27 - 88
ADH-8/1	♦DDC	27 - 65
ADH-9/1	♦DDC	27 - 58
ADH-10/1	♦DDC	27 - 57
ADH-11/.5	DDC	27 - 56
AH0014CN	♦NSC	34 - 79
AH0015CN	♦NSC	34 - 72
AH0019CN	♦NSC	34 - 77
AH0133CN	NSC	36 - 15
AH0134CN	NSC	36 - 16
AH0151CN	NSC	36 - 17
AH0152CN	NSC	36 - 18
AND601	AND	23 - 47
AS5040C	♦DTL	33 - 10
AS5040M	♦DTL	33 - 11
AS5041C	♦DTL	33 - 40
AS5041M	♦DTL	33 - 41
AS5042C	DTL	34 - 12
AS5042M	DTL	34 - 13
AS5043C	DTL	34 - 24
AS5043M	DTL	34 - 25
AS5044C	DTL	34 - 38
AS5044M	DTL	34 - 39
AS5045C	DTL	34 - 42
AS5045M	DTL	34 - 43
AS5046C	DTL	34 - 48
AS5046M	DTL	34 - 49
AS5047C	DTL	34 - 50
AS5047M	DTL	34 - 51
AS5048C	DTL	33 - 42
AS5048M	DTL	33 - 43
AS5049C	DTL	34 - 44
AS5049M	DTL	34 - 45
AS5050C	DTL	34 - 14
AS5050M	DTL	34 - 15
AS5051C	DTL	34 - 26
AS5051M	DTL	34 - 27
AS5140C	♦DTL	33 - 12
AS5140M	♦DTL	33 - 13
AS5141C	DTL	33 - 44
AS5141M	DTL	33 - 45
AS5142C	DTL	34 - 16
AS5142M	DTL	34 - 17
AS5143C	DTL	34 - 28
AS5143M	DTL	34 - 29
AS5144C	DTL	34 - 40
AS5144M	DTL	34 - 41
AS5145C	♦DTL	34 - 46
AS5145M	♦DTL	34 - 47
AY3-1014A	GIC	59 - 65
AY3-3550	GIC	59 - 56
AY3-9401	GIC	59 - 59
AY5-1012	♦GIC	59 - 96
AY5-1013A	GIC	60 - 22
AY5-1016	GIC	41 - 2
AY5-2376	♦GIC	58 - 29
AY5-3500	GIC	59 - 98
AY5-3507	GIC	59 - 29
AY5-3510	GIC	59 - 30
AY5-3600	♦GIC	58 - 30
AY5-3600PRO	GIC	56 - 39
AY5-4007	GIC	24 - 43
AY5-4007A	GIC	24 - 44
AY5-4007D	GIC	24 - 45
AY5-8450	GIC	59 - 97
AY5-8460	GIC	59 - 28
AY5-9050	GIC	21 - 42
AY5-9100	GIC	56 - 89
AY5-9106	GIC	56 - 90
AY5-9110	GIC	56 - 91
AY5-9118	GIC	56 - 92
AY5-9120	GIC	56 - 93
AY5-9151	GIC	56 - 94
AY5-9153	GIC	56 - 95
AY5-9200	GIC	56 - 28
AY5-9500	GIC	56 - 96
AY5-9801	GIC	60 - 3
AY5-9802	GIC	60 - 4
AY5-9803	GIC	60 - 5
AY5-9804	GIC	60 - 6
AY5-9805	GIC	60 - 7
AY5-9806	GIC	60 - 8
AY5-9807	GIC	60 - 9
AY5-9808	GIC	60 - 10
AY5-9821	GIC	60 - 11
AY5-9822	GIC	60 - 12
AY5-9823	GIC	60 - 13
AY5-9824	GIC	60 - 14
AY5-9825	GIC	60 - 15
AY5-9826	GIC	60 - 16
AY5-9827	GIC	60 - 17
AY5-9828	GIC	60 - 18
AY6-1013	GIC	60 - 23
AY6-4016	GIC	41 - 3
AY8-1472B	GIC	56 - 1
AY8-1482B	GIC	56 - 2
AY9-9086	GIC	58 - 31
AY9-9600	GIC	58 - 32
BD5030	♦BOW	24 - 58
BD5031	♦BOW	24 - 59
CA1541D	♦RCA	51 - 1
CAG42	none	33 - 3
CD4007UBK	RCA	11 - 2
CD4009AY	RCA	31 - 17
CD4009BD	RCA	31 - 18
CD4009BE	RCA	31 - 19
CD4009BF	RCA	31 - 20
CD4009BH	RCA	31 - 21
CD4009BK	RCA	31 - 22
CD4009BY	RCA	31 - 23
CD4009UBK	RCA	31 - 24
CD4010AY	RCA	31 - 25
CD4010BK	RCA	31 - 26
CD4010BY	RCA	31 - 27
CD4016AK	RCA	33 - 25
CD4016AY	RCA	33 - 26
CD4016BK	RCA	33 - 27
CD4041AY	RCA	31 - 61
CD4041BD	RCA	31 - 10
CD4041BE	RCA	31 - 11
CD4041BF	RCA	31 - 12
CD4041BH	RCA	31 - 13
CD4041BK	RCA	31 - 14
CD4041BY	RCA	31 - 15
CD4041UBK	RCA	31 - 62
CD4049AY	RCA	31 - 28
CD4049BD	RCA	31 - 29
CD4049BE	RCA	31 - 30
CD4049BF	RCA	31 - 31
CD4049BH	RCA	31 - 32
CD4049BK	RCA	31 - 33
CD4049BY	RCA	31 - 34
CD4049UBK	RCA	31 - 35
CD4050AY	RCA	31 - 36
CD4050BK	RCA	31 - 37
CD4050BY	RCA	31 - 38
CD4054BY	RCA	23 - 49
CD4055BY	RCA	23 - 66
CD4056BY	RCA	23 - 67
CD4066BK	RCA	33 - 28
CD4067BK	RCA	41 - 38
CD4069UBK	RCA	11 - 11
CD4093BK	RCA	55 - 6
CD4097BK	RCA	41 - 52
CD4502BK	RCA	11 - 12
CD4511BK	RCA	23 - 75
CD4512BK	RCA	42 - 3
CD4532BK	RCA	56 - 74
CD4555BK	RCA	46 - 26
CD4556BK	RCA	46 - 27
CD7216AC	♦DTL	24 - 6
CD7216BC	♦DTL	24 - 7
CD7216CC	♦DTL	24 - 8
CD7216DC	♦DTL	24 - 9
CD7217AC	♦DTL	24 - 10
CD7217BC	♦DTL	24 - 11
CD7217C	♦DTL	24 - 12
CD7217CC	♦DTL	24 - 13
CD7224AC	DTL	24 - 4
CD7224C	DTL	24 - 5
CD7225AC	DTL	24 - 14
CD7225C	DTL	24 - 15
CD7226AC	♦DTL	24 - 16
CD7226BC	♦DTL	24 - 17
CD7227AC	♦DTL	24 - 18
CD7227BC	♦DTL	24 - 19
CD7227C	♦DTL	24 - 20
CD7227CC	♦DTL	24 - 21
CD22100K	RCA	33 - 52
CD40257BY	RCA	42 - 7
CDP1871CD	♦RCA	57 - 83
CDP1871CE	♦RCA	57 - 84
CDP1871D	♦RCA	57 - 85
CDP1871E	♦RCA	57 - 86
CM1150	♦CER	16 - 1
CM1151	CER	16 - 2
CM1161	CER	48 - 1
CM4104AD	♦SOD	31 - 64
CM4104AE	♦SOD	31 - 65
CM4104AF	♦SOD	31 - 66
CM4104AH	♦SOD	31 - 67
CTS0007	CMI	19 - 48
CTS0007DIP	CMI	19 - 49
CTS0009	CMI	19 - 50
CTS0009DIP	CMI	19 - 51
CTS0034H-B	CMI	31 - 8
D123BL	SIX	26 - 26
D125BL	SIX	26 - 27
D129BL	SIX	26 - 6
D130AA	♦SIX	26 - 2
D130AL	♦SIX	26 - 3
D130BA	♦SIX	26 - 4
D130BL	SIX	26 - 5
D132AL	♦SIX	26 - 7
D132AP	♦SIX	26 - 8
D132BL	♦SIX	26 - 9
D132BP	♦SIX	26 - 10
D139BL	SIX	26 - 1
D140CJ	♦SIX	23 - 6
DAC02ACX2	PMI	29 - 56
DAC02BCX2	PMI	29 - 18
DAC02CCX2	PMI	28 - 94
DAC02DDX2	PMI	28 - 51
DAC03ADX2	♦PMI	29 - 57
DAC03BDX2	♦PMI	29 - 40
DAC03CDX2	♦PMI	29 - 41
DAC03DDX2	♦PMI	29 - 81
DAC04ACX2	PMI	29 - 58
DAC04BCX	PMI	29 - 59
DAC04CCX	PMI	29 - 71
DAC04DDX	PMI	29 - 82
DAC04G	♦PMI	30 - 48
DAC04GR	♦PMI	30 - 54
DAC04GT	PMI	30 - 55
DAC04N	♦PMI	30 - 45
DAC04NT	PMI	30 - 49
DAC05-883AX2	PMI	29 - 89
DAC05-883BX2	PMI	29 - 92
DAC05-883CX2	PMI	29 - 95
DAC05AX2	PMI	29 - 90
DAC05BX2	PMI	29 - 93
DAC05CX2	PMI	29 - 96
DAC05EX2	PMI	29 - 91
DAC05FX2	PMI	29 - 94
DAC05GX2	PMI	29 - 97
DAC06-883AX	PMI	29 - 72
DAC06AX	PMI	29 - 73
DAC10AX	PMI	29 - 26
DAC10EX	PMI	29 - 27
DAC12-883AV	PMI	30 - 1
DAC12-883BV	PMI	30 - 28
DAC12AV	PMI	30 - 14
DAC12AV#mil	♦PMI	30 - 58
DAC12BV	PMI	30 - 15
DAC12BV#mil	♦PMI	30 - 59
DAC12EV	♦PMI	30 - 16
DAC12FV	♦PMI	30 - 17
DAC12G	PMI	30 - 10
DAC12GR	PMI	30 - 11
DAC12GV	♦PMI	30 - 33
DAC12GV#	PMI	30 - 44
DAC12HV	PMI	30 - 39
DAC20-883AQ	♦PMI	28 - 99
DAC20-883Q	♦PMI	28 -110
DAC20AQ	♦PMI	28 -100
DAC20Q	♦PMI	29 - 1
DAC76BX	PMI	29 - 10
DAC76CX	♦PMI	29 - 11
DAC76DX	♦PMI	29 - 7
DAC76EX	♦PMI	29 - 8
DAC76G	♦PMI	29 - 9
DAC76N	♦PMI	29 - 6
DAC76X	♦PMI	29 - 12
DAC78EX	PMI	29 - 13
DAC78FX	PMI	29 - 14
DAC78G	PMI	29 - 15
DAC78GX	PMI	29 - 16
DAC78N	PMI	29 - 17
DAC98CX	none	28 - 52
DAC100AAN9	PMI	29 - 28
DAC100AAQ1	PMI	29 - 29
DAC100AAQ2	PMI	29 - 30
DAC100ABN9	♦PMI	29 - 31
DAC100ABQ1	PMI	29 - 32
DAC100ABQ2	PMI	29 - 33
DAC100ACN9	♦PMI	29 - 34
DAC100ACQ1	PMI	29 - 35
DAC100ACQ2	PMI	29 - 36
DAC100BAN9	PMI	29 - 45
DAC100BAQ1	PMI	29 - 46
DAC100BAQ2	PMI	29 - 47
DAC100BBN9	♦PMI	29 - 48
DAC100BBQ1	PMI	29 - 49
DAC100BBQ2	PMI	29 - 50
DAC100BBQ3	PMI	29 - 51
DAC100BBQ4	PMI	29 - 52
DAC100BCN9	♦PMI	29 - 53
DAC100BCQ1	PMI	29 - 54
DAC100BCQ2	PMI	29 - 55
DAC100CCN9	♦PMI	29 - 65
DAC100CCQ1	PMI	29 - 66
DAC100CCQ2	PMI	29 - 67
DAC100DDN9	PMI	29 - 77
DAC100DDQ1	PMI	29 - 78
DAC100DDQ2	PMI	29 - 79
DAC100DDQ5	♦PMI	29 - 75
DAC100DDQ6	♦PMI	29 - 76
DAC101EQ	♦PMI	29 - 61
DAC101FQ	♦PMI	29 - 74
DAC101GQ	♦PMI	29 - 80
DAC206AY	PMI	28 - 45
DAC206BY	PMI	28 - 49
DAC206EY	PMI	28 - 47
DAC206FY	PMI	28 - 50
DAC206G	PMI	28 - 48
DAC206N	PMI	28 - 46
DAC334	♦HBC	28 - 86
DAC334-8-M/B	♦HBC	28 - 92
DAC334-8-M/C	♦HBC	28 - 93
DAC336-8	HBC	28 - 98
DAC808CQ	♦PMI	28 - 35
DAC862BG	♦BUB	29 -106
DAC862BG-BIN	♦BUB	30 - 51
DAC862KG	♦BUB	30 - 22
DAC862KG-BIN	♦BUB	30 - 62
DAC862SG-BIN	♦BUB	30 - 52
DAC863BG	♦BUB	30 - 23
DAC863BG-BIN	♦BUB	30 - 53
DAC863KG	♦BUB	30 - 24
DAC863KG-BIN	♦BUB	30 - 63
DAC921JG	BUB	30 - 46
DAC921KG	BUB	30 - 42
DAC921LG	BUB	30 - 34
DAC921RG	BUB	30 - 47
DAC921SG	BUB	30 - 43
DAC921TG	BUB	30 - 35
DAC7520C	♦DTL	29 - 37
DAC7520M	♦DTL	29 - 38
DAC7520R	♦DTL	29 - 39
DAC7521C	♦DTL	30 - 36
DAC7521M	♦DTL	30 - 37
DAC7521R	♦DTL	30 - 38
DAC7523C	♦DTL	28 - 83
DAC7523M	♦DTL	28 - 84
DAC7523R	♦DTL	28 - 85
DAC7533C	♦DTL	29 - 86
DAC7533M	♦DTL	29 - 87
DAC7533R	♦DTL	29 - 88
DAC7541C	♦DTL	30 - 2
DAC7541M	♦DTL	30 - 3
DAC7541R	♦DTL	30 - 4
DAC-08ADM	RTN	28 - 62
DAC-08CDM	RTN	28 -103
DAC-08DM	RTN	28 - 63
DAC-08EDM	RTN	28 - 71
DAC-08HDM	RTN	28 - 55
DAC-681C	DTL	30 - 12
DAC-681M	DTL	30 - 13
DAC-2531	DDC	28 - 88
DAS-8D-LP12B-A1	DTL	58 - 33
DAS-8D-LP12B-B1	DTL	58 - 34
DAS-8D-LP12B-C2	DTL	58 - 35
DAS-8D-LP12B-C3	DTL	58 - 36
DAS-8D-LP12B-D2	DTL	58 - 37
DAS-8D-LP12B-D3	DTL	58 - 38
DAS-16D-LP12B-A1	DTL	58 - 39
DAS-16D-LP12B-B1	DTL	58 - 40
DAS-16D-LP12B-C2	DTL	58 - 41
DAS-16D-LP12B-C3	DTL	58 - 42
DAS-16D-LP12B-D2	DTL	58 - 43
DAS-16D-LP12B-D3	DTL	58 - 44
DAS-16L-8B1A1	♦DTL	58 - 45
DAS-16L-8B1B1	♦DTL	58 - 46
DAS-16L-8B1C3	♦DTL	58 - 47
DAS-16L-8B1C4	♦DTL	58 - 48
DAS-16L-8B1D3	♦DTL	58 - 49
DAS-16L-8B1D4	♦DTL	58 - 50
DAS-16L-8B2A1	♦DTL	58 - 51
DAS-16L-8B2B1	♦DTL	58 - 52
DAS-16L-8B2C3	♦DTL	58 - 53
DAS-16L-8B2C4	♦DTL	58 - 54
DAS-16L-8B2D4	♦DTL	58 - 55
DAS-16L-8D1A2	♦DTL	58 - 56
DAS-16L-8D1B2	♦DTL	58 - 57
DAS-16L-8D2A2	♦DTL	58 - 58
DAS-16L-8D2B2	♦DTL	58 - 59
DAS-16L-10B1A1	♦DTL	58 - 60
DAS-16L-10B1B1	♦DTL	58 - 61
DAS-16L-10B1C3	♦DTL	58 - 62
DAS-16L-10B1C4	♦DTL	58 - 63
DAS-16L-10B1D3	♦DTL	58 - 64
DAS-16L-10B1D4	♦DTL	58 - 65
DAS-16L-10B2A1	♦DTL	58 - 66
DAS-16L-10B2B1	♦DTL	58 - 67
DAS-16L-10B2C3	♦DTL	58 - 68
DAS-16L-10B2C4	♦DTL	58 - 69
DAS-16L-10B2D3	♦DTL	58 - 70
DAS-16L-10B2D4	♦DTL	58 - 71
DAS-16L-12B1A1	♦DTL	58 - 72
DAS-16L-12B1B1	♦DTL	58 - 73
DAS-16L-12B1C3	♦DTL	58 - 74
DAS-16L-12B1C4	♦DTL	58 - 75
DAS-16L-12B1D3	♦DTL	58 - 76
DAS-16L-12B1D4	♦DTL	58 - 77
DAS-16L-12B2A1	♦DTL	58 - 78
DAS-16L-12B2B1	♦DTL	58 - 79
DAS-16L-12B2C3	♦DTL	58 - 80
DAS-16L-12B2C4	♦DTL	58 - 81
DAS-16L-12B2D3	♦DTL	58 - 82
DAS-16L-12B2D4	♦DTL	58 - 83
DAS-16L-12D1A2	♦DTL	58 - 84
DAS-16L-12D1B2	♦DTL	58 - 85
DAS-16L-12D2A2	♦DTL	58 - 86
DAS-16L-12D2B2	♦DTL	58 - 87
DAS-16M-8B1A1	♦DTL	58 - 88
DAS-16M-8B1B1	♦DTL	58 - 89
DAS-16M-8B1C3	♦DTL	58 - 90
DAS-16M-8B1C4	♦DTL	58 - 91
DAS-16M-8B1D3	♦DTL	58 - 92
DAS-16M-8B1D4	♦DTL	58 - 93
DAS-16M-8B2A1	♦DTL	58 - 94
DAS-16M-8B2B1	♦DTL	58 - 95
DAS-16M-8B2C3	♦DTL	58 - 96
DAS-16M-8B2C4	♦DTL	58 - 97
DAS-16M-8B2D3	♦DTL	58 - 98
DAS-16M-8B2D4	♦DTL	58 - 99
DAS-16M-8D1A2	♦DTL	58 -100
DAS-16M-8D1B2	♦DTL	58 -101
DAS-16M-8D2A2	♦DTL	58 -102
DAS-16M-8D2B2	♦DTL	58 -103
DAS-16M-10B1A1	♦DTL	58 -104
DAS-16M-10B1B1	♦DTL	59 - 1
DAS-16M-10B1C3	♦DTL	59 - 2
DAS-16M-10B1C4	♦DTL	59 - 3
DAS-16M-10B1D3	♦DTL	59 - 4
DAS-16M-10B1D4	♦DTL	59 - 5
DAS-16M-10B2A1	♦DTL	59 - 6
DAS-16M-10B2B1	♦DTL	59 - 7
DAS-16M-10B2C3	♦DTL	59 - 8
DAS-16M-10B2C4	♦DTL	59 - 9
DAS-16M-10B2D3	♦DTL	59 - 10
DAS-16M-10B2D4	♦DTL	59 - 11
DAS-16M-12B1A1	♦DTL	59 - 12
DAS-16M-12B1B1	♦DTL	59 - 13
DAS-16M-12B1C3	♦DTL	59 - 14
DAS-16M-12B1C4	♦DTL	59 - 15
DAS-16M-12B1D3	♦DTL	59 - 16
DAS-16M-12B1D4	♦DTL	59 - 17
DAS-16M-12B2A1	♦DTL	59 - 18
DAS-16M-12B2B1	♦DTL	59 - 19
DAS-16M-12B2C3	♦DTL	59 - 20
DAS-16M-12B2C4	♦DTL	59 - 21

INTERFACE

♦-Mfr's data sheet available in microfilm service

Cur-In current D.A.T.A.BOOK
Δ-Registered with JEDEC by this manufacturer

Obs-In this book

1. TYPE No. CROSS INDEX

IN TYPE NUMBER SEQUENCE

TYPE No.	MFRS	Pg&Line
DAS-16M-12B2D3	♦DTL	59 - 22
DAS-16M-12B2D4	♦DTL	59 - 23
DAS-16M-12D1A2	♦DTL	59 - 24
DAS-16M-12D1B2	♦DTL	59 - 25
DAS-16M-12D2A2	♦DTL	59 - 26
DAS-16M-12D2B2	♦DTL	59 - 27
DAS-250	♦DTL	60 - 41
DD700#	BECK	25 - 12
DD704	♦BEC	23 - 17
	♦BECK	
DD7211AC	♦DTL	23 - 98
DD7211AMC	♦DTL	23 - 99
DD7211C	♦DTL	23 -100
DD7211MC	♦DTL	23 -101
DD7212AC	♦DTL	23 -102
DD7212AMC	♦DTL	23 -103
DD7212C	♦DTL	23 -104
DD7212MC	♦DTL	23 -105
DD7218AC	♦DTL	23 - 59
DD7218BC	♦DTL	23 - 60
DD7218CC	♦DTL	23 - 61
DD7218DC	♦DTL	23 - 62
DD7218EC	♦DTL	23 - 65
DDC5497-1	DDC	27 -101
DDC5497-3	DDC	27 -102
DF321DJ	SIX	56 - 97
DF321DR	SIX	56 - 98
DF325DJ	SIX	56 - 99
DF331/332	♦SIX	56 -100
DF331CJ	SIX	27 - 12
DF332CJ	SIX	28 - 53
DF334CJ	SIX	56 -101
DF341/342	♦SIX	56 -102
DF411CJ	SIX	23 - 87
DG116AL	SIX	34 - 61
DG116AP	SIX	34 - 62
DG116BL	SIX	34 - 63
DG116BP	SIX	34 - 64
DG123BL	SIX	35 - 83
DG125BL	SIX	35 - 84
DG126BL	SIX	34 - 89
DG129BL	SIX	34 - 99
DG133BL	SIX	34 - 81
DG134BL	SIX	34 - 82
DG139BL	SIX	35 - 7
DG140BL	SIX	34 - 90
DG141BL	SIX	34 - 83
DG142BL	SIX	35 - 8
DG143BL	SIX	34 -107
DG144BL	SIX	34 -108
DG145BL	SIX	35 - 9
DG146BL	SIX	34 -109
DG151BL	SIX	34 - 84
DG152BL	SIX	34 - 85
DG153BL	SIX	34 - 91
DG154BL	SIX	34 - 92
DG161BL	SIX	34 -110
DG162BL	SIX	35 - 1
DG163BL	SIX	35 - 10
DG164BL	SIX	35 - 11
DG170AP	♦SIX	36 - 6
DG170BP	♦SIX	36 - 7
DG170CJ	♦SIX	36 - 8
DG171AA	♦SIX	35 - 44
DG171BA	♦SIX	35 - 45
DG173AL	♦SIX	36 - 9
DG173AP	♦SIX	36 - 10
DG173BL	SIX	36 - 11
DG173BP	♦SIX	36 - 12
DG175AA	♦SIX	36 - 2
DG175BA	♦SIX	36 - 3
DG180BL△	SIX	34 - 86
DG181BL△	SIX	34 - 87
DG182BL△	SIX	34 - 88
DG183BL△	SIX	34 - 93
DG184BL△	SIX	34 - 94
DG185BL△	SIX	34 - 95
DG186BL△	SIX	35 - 2
DG187BL△	SIX	34 -106
DG188BL△	SIX	35 - 3
DG189BL△	SIX	35 - 4
DG190BL△	SIX	35 - 5
DG191BL△	SIX	35 - 6
DG201AL	SIX	33 - 47
DG201AP	SIX	33 - 48
DG201BL	SIX	33 - 49
DG201BP	SIX	33 - 50
DG201CJ	♦SIX	33 - 51
DG300AL	SIX	34 - 4
DG300BL	SIX	34 - 5
DG301AL	SIX	33 - 66
DG301BL	SIX	33 - 67
DG302AL	SIX	34 - 8
DG302BL	SIX	34 - 9
DG303AL	SIX	33 - 70
DG303BL	SIX	33 - 71
DG304AL	SIX	34 - 6
DG304BL	SIX	34 - 7
DG305AL	SIX	33 - 68
DG305BL	SIX	33 - 69
DG306AL	SIX	34 - 10
DG306BL	SIX	34 - 11
DG307AL	SIX	33 - 72
DG307BL	SIX	33 - 73
DG508BL	SIX	41 - 21
DG509BL	SIX	41 - 49
DG515BDICE	SIX	35 - 23
DG515CDICE	SIX	35 - 24

TYPE No.	MFRS	Pg&Line
DG516BDICE	SIX	35 - 25
DG516CDICE	SIX	35 - 26
DGM111AL	SIX	35 - 27
DGM111AP	SIX	35 - 28
DGM111BL	SIX	35 - 29
DGM111BP	SIX	35 - 30
DGM122AL	SIX	35 - 35
DGM122AP	SIX	35 - 36
DGM122BL	SIX	35 - 37
DGM122BP	SIX	35 - 38
DH0016CN	♦NSC	21 - 48
DM780D	DIO	34 -100
DM780F	DIO	34 -101
DM780P	DIO	34 -102
DM853D	DIO	35 - 78
DM853F	DIO	35 - 79
DM853P	DIO	35 - 80
DM7820A	MULB	48 - 65
PHIN	♦SIC	
DM7820F	MULB	48 - 66
PHIN	♦SIC	
DM7830A	MULB	48 - 73
PHIN	SIC	
DM7830F	MULB	48 - 74
PHIN	SIC	
DM8820A	MULB	48 - 67
PHIN	♦SIC	
DM8820F	MULB	48 - 68
PHIN	♦SIC	
DM8830A	MULB	48 - 75
PHIN	SIC	
DM8830F	MULB	48 - 76
PHIN	SIC	
DM8880B	MULB	25 - 13
PHIN	♦SIC	
DRC644H3	DDC	56 - 36
DS8T26AMJ	NSC	50 - 42
DS0025CN8	♦NSC	19 - 74
DS0025CN-8	NSC	19 - 75
DS0026CJ8	♦NSC	19 - 76
DS0026CJ	♦NSC	19 - 77
DS0026CN8	♦NSC	19 - 78
DS0026CN-8	NSC	19 - 79
DS0026F	♦NSC	19 - 80
DS0026G	♦NSC	19 - 81
DS0026J8	♦NSC	19 - 82
DS0026J	♦NSC	19 - 83
DS0026W	♦NSC	19 - 84
DS26LS31MW	NSC	17 - 72
DS26LS32MW	NSC	49 - 9
DS26LS33MW	NSC	49 - 10
DS26S10MW	NSC	50 - 78
DS26S11MW	NSC	50 - 79
DS0056CG	NSC	19 - 85
DS0056CJ8	NSC	19 - 86
DS0056CJ	NSC	19 - 87
DS0056CN8	NSC	19 - 88
DS0056CN-8	NSC	19 - 89
DS0056G	NSC	19 - 90
DS0056J8	NSC	19 - 91
DS0056J	NSC	19 - 92
DS78C20N	NSC	48 - 2
DS78C120W	NSC	48 - 3
DS78L12W	NSC	32 - 27
DS78LS20J	NSC	48 - 44
DS78LS20W	NSC	48 - 45
DS78LS120W	NSC	48 - 46
DS88LS20J	NSC	48 - 47
DS88LS20N	NSC	48 - 48
DS1603W	NSC	48 - 41
DS1605J	NSC	53 - 54
DS1606J	NSC	53 - 55
DS1607J	NSC	53 - 56
DS1608J	NSC	53 - 57
DS1631J	NSC	21 - 21
DS1632J	NSC	21 - 22
DS1633J	NSC	21 - 23
DS1634J	NSC	21 - 24
DS1640J	NSC	20 - 3
DS1642H	NSC	19 - 59
DS1642J	NSC	19 - 53
DS1642J-8	NSC	19 - 60
DS1644N	NSC	19 - 97
DS1646J	NSC	20 - 50
DS1646W	NSC	20 - 51
DS1647J	NSC	20 - 4
DS1649W	NSC	20 - 52
DS1670J	NSC	20 - 5
DS1671J	♦NSC	19 - 93
DS1672H	NSC	19 - 61
DS1672J	NSC	19 - 54
DS1672J-8	NSC	19 - 62
DS1674N	NSC	19 - 98
DS1676J	NSC	20 - 53
DS1676W	NSC	20 - 54
DS1677J	NSC	20 - 6
DS1679W	NSC	20 - 55
DS1686J	♦NSC	22 - 63
DS1687J	♦NSC	22 - 64
DS1688J	♦NSC	17 - 24
DS1689J	♦NSC	49 - 1
DS1690J	NSC	49 - 2
DS1691W	NSC	16 - 88
DS1692W	NSC	16 - 93
DS3604J	♦NSC	48 - 37
DS3604N	♦NSC	48 - 38
DS3605J	NSC	53 - 58
DS3605N	NSC	53 - 59
DS3606J	NSC	53 - 60
DS3606N	NSC	53 - 61
DS3607J	NSC	53 - 62
DS3607N	NSC	53 - 63
DS3608J	NSC	53 - 64
DS3608N	NSC	53 - 65

TYPE No.	MFRS	Pg&Line
DS3611N-8	NSC	22 - 69
DS3611T	PHIN	22 - 70
	♦SIC	
DS3612N-8	NSC	22 - 71
DS3612T	PHIN	22 - 72
	♦SIC	
DS3613N-8	NSC	22 - 73
DS3613T	PHIN	22 - 74
	♦SIC	
DS3614N-8	NSC	22 - 75
DS3614T	PHIN	22 - 76
	♦SIC	
DS3622J	NSC	19 -108
DS3622N	NSC	19 -109
DS3625N	NSC	53 - 45
DS3629J	♦NSC	19 -104
DS3629N	♦NSC	19 -105
DS3631J	NSC	21 - 25
DS3631N-8	NSC	21 - 26
DS3632J	NSC	21 - 27
DS3632N-8	NSC	21 - 28
DS3633N-8	NSC	21 - 29
DS3634J	NSC	21 - 30
DS3634J-8	NSC	21 - 31
DS3634N-8	NSC	21 - 32
DS3640J	NSC	20 - 7
DS3640N	NSC	20 - 8
DS3642H	NSC	19 - 63
DS3642J	NSC	19 - 55
DS3642J-8	NSC	19 - 64
DS3642N	NSC	19 - 56
DS3642N-8	NSC	19 - 65
DS3643J	NSC	19 - 99
DS3643N	NSC	19 -100
DS3646J	NSC	20 - 56
DS3646N	NSC	20 - 57
DS3647J	NSC	20 - 9
DS3654J	NSC	21 - 2
DS3670J	NSC	20 - 10
DS3670N	NSC	20 - 11
DS3671J	NSC	19 - 94
DS3671N-8	NSC	19 - 95
DS3672H	NSC	19 - 66
DS3672J	NSC	19 - 57
DS3672J-8	NSC	19 - 67
DS3672N	NSC	19 - 58
DS3672N-8	NSC	19 - 68
DS3673J	NSC	19 -101
DS3673N	NSC	19 -102
DS3676J	NSC	20 - 58
DS3676N	NSC	20 - 59
DS3677J	NSC	20 - 12
DS3686J	♦NSC	22 - 65
DS3686N-8	NSC	22 - 66
DS3687J	♦NSC	22 - 67
DS3687N-8	NSC	22 - 68
DS3688J	♦NSC	17 - 25
DS3688N	♦NSC	17 - 26
DS3689J	♦NSC	49 - 3
DS3689N	♦NSC	49 - 4
DS3690J	NSC	49 - 5
DS3690N	NSC	49 - 6
DS5520AJ	♦NSC	51 - 64
DS5520J	♦NSC	51 - 44
DS5521J	♦NSC	51 - 19
DS5522AJ	♦NSC	51 - 65
DS5522J	♦NSC	51 - 45
DS5522W	♦NSC	51 - 46
DS5523J	NSC	51 - 20
DS5524AJ	♦NSC	53 - 23
DS5524J	♦NSC	52 - 92
DS5525J	NSC	52 - 2
DS5528AJ	♦NSC	53 - 24
DS5528J	♦NSC	52 - 93
DS5529J	NSC	52 - 3
DS5534AJ	♦NSC	53 - 25
DS5534J	♦NSC	52 - 94
DS5535J	NSC	52 - 4
DS5538AJ	♦NSC	53 - 26
DS5538J	NSC	52 - 95
DS5539J	NSC	52 - 5
DS7520AJ	♦NSC	51 - 66
DS7520AN	♦NSC	51 - 67
DS7520J	♦NSC	51 - 47
DS7520N	♦NSC	51 - 48
DS7521J	♦NSC	51 - 21
DS7521N	♦NSC	51 - 22
DS7522AJ	♦NSC	51 - 68
DS7522AN	♦NSC	51 - 69
DS7522J	♦NSC	51 - 49
DS7522N	♦NSC	51 - 50
DS7523J	NSC	51 - 23
DS7523N	NSC	51 - 24
DS7524AJ	♦NSC	53 - 27
DS7524AN	♦NSC	53 - 28
DS7524J	♦NSC	52 - 96
DS7524N	♦NSC	52 - 97
DS7525J	NSC	52 - 6
DS7525N	NSC	52 - 7
DS7528AJ	♦NSC	53 - 29
DS7528AN	♦NSC	53 - 30
DS7528J	♦NSC	52 - 98
DS7528N	NSC	52 - 99
DS7529J	NSC	52 - 8
DS7529N	NSC	52 - 9
DS7534AJ	♦NSC	53 - 31
DS7534AN	♦NSC	53 - 32
DS7534J	♦NSC	52 -100
DS7534N	♦NSC	52 -101
DS7535J	NSC	52 - 10
DS7535N	NSC	52 - 11
DS7538AJ	♦NSC	53 - 33
DS7538AN	♦NSC	53 - 34
DS7538J	♦NSC	52 -102

TYPE No.	MFRS	Pg&Line
DS7538N	♦NSC	52 -103
DS7539J	NSC	52 - 12
DS7539N	NSC	52 - 13
DS7640J	♦NSC	49 - 42
DS7640W	NSC	49 - 43
DS7641W	NSC	50 - 50
DS7654N	NSC	25 - 9
DS7664N	NSC	23 - 15
DS7802J	NSC	53 - 46
DS7806J	NSC	53 - 47
DS7806W	NSC	53 - 48
DS7810W	NSC	32 - 24
DS7811W	NSC	32 - 25
DS7812W	NSC	32 - 28
DS7819W	NSC	32 - 26
DS7820AW	♦NSC	48 - 53
DS7820N	PHIN	48 - 54
RTCF	SIC	
DS7820W	NSC	48 - 55
DS7822J	NSC	49 - 16
DS7830W	NSC	16 -104
DS7831W	NSC	17 - 28
DS7832W	NSC	17 - 29
DS7833W	NSC	50 - 51
DS7834W	NSC	50 - 52
DS7835W	NSC	50 - 53
DS7836W	NSC	49 - 49
DS7837W	NSC	49 - 53
DS7838W	NSC	50 - 54
DS7839W	NSC	50 - 55
DS7856J	♦NSC	24 - 87
DS7856W	NSC	24 - 88
DS7858J	♦NSC	24 - 89
DS7858W	NSC	24 - 90
DS7885J	NSC	25 - 14
DS7887J	NSC	24 - 72
DS7891J	NSC	24 - 69
DS7895J	NSC	24 - 77
DS8642J	NSC	50 - 80
DS8642N	NSC	50 - 81
DS8646N	NSC	24 - 62
DS8647N	♦NSC	24 -105
DS8648N	♦NSC	24 -106
DS8650	♦NSC	24 - 78
DS8650N	♦NSC	24 - 79
DS8651	♦NSC	24 - 91
DS8651N	♦NSC	24 - 92
DS8655N	NSC	25 -106
DS8658	NSC	24 - 80
DS8658N	NSC	24 - 60
DS8659	♦NSC	24 - 93
DS8659N	♦NSC	24 - 94
DS8665N	♦NSC	23 - 16
DS8667N	NSC	23 - 7
DS8673J	♦NSC	25 -100
DS8673N	♦NSC	25 -101
DS8674J	♦NSC	25 -102
DS8674N	♦NSC	25 -103
DS8693N	NSC	23 - 9
DS8694N	NSC	23 - 10
DS8802J	NSC	53 - 49
DS8802N	NSC	53 - 50
DS8806J	NSC	53 - 51
DS8806N	NSC	53 - 52
DS8820AW	NSC	48 - 56
DS8820W	NSC	48 - 57
DS8830W	NSC	16 -105
DS8844N	♦NSC	24 - 95
DS8855N	♦NSC	24 -107
DS8856J	♦NSC	24 - 96
DS8856N	♦NSC	24 - 97
DS8857J	♦NSC	24 - 98
DS8858J	♦NSC	24 - 99
DS8858N	♦NSC	24 -100
DS8864N	♦NSC	24 -108
DS8865N	♦NSC	24 -103
DS8866N	♦NSC	24 -101
DS8868J	NSC	25 - 96
DS8868N	NSC	25 - 97
DS8870J	NSC	24 - 83
DS8874J	NSC	24 -109
DS8876J	NSC	24 -110
DS8876N	NSC	25 - 1
DS8877J	NSC	24 - 84
DS8879J	NSC	25 - 2
DS8879N	NSC	25 - 3
DS8880-1F	♦SIC	25 - 15
DS8880-1N	♦SIC	25 - 16
DS8887N	♦NSC	24 - 73
DS8891J	NSC	24 - 70
DS8891N	NSC	24 - 71
DS8892N	NSC	24 - 85
DS8895J	NSC	24 - 81
DS8895N	NSC	24 - 82
DS8920N	NSC	25 - 4
DS8968J	NSC	23 - 13
DS8968N	NSC	23 - 14
DS8974N	NSC	25 - 5
DS8976N	NSC	25 - 6
DS8977N	NSC	24 -102
DS8978N	NSC	25 - 7
DS8979N	NSC	25 - 8
DS8980J	NSC	23 - 18
DS8980N	♦NSC	23 - 19
DS8981J	♦NSC	23 - 20
DS8981N	♦NSC	23 - 21
DS16147D	NSC	20 - 13
DS16147J	NSC	20 - 14
DS16149W	NSC	20 - 60
DS16177J	NSC	20 - 15
DS16179W	NSC	20 - 61
DS36147D	♦NSC	19 - 47
DS36147J	NSC	20 - 16
DS36177J	NSC	20 - 17

TYPE No.	MFRS	Pg&Line
DS55107W	NSC	48 - 42
DS55108W	NSC	48 - 43
DS55109J	♦NSC	17 - 11
DS55110J	NSC	17 - 12
DS55115W	NSC	48 - 58
DS55121W	NSC	17 - 35
DS55122W	NSC	49 - 32
DS55325W	NSC	20 - 2
DS55450J	NSC	22 - 5
DS55460J	NSC	22 - 56
DS75109J	NSC	17 - 13
DS75109N	NSC	17 - 14
DS75110J	NSC	17 - 15
DS75110N	NSC	17 - 16
DS75150J	♦NSC	17 - 52
DS75150N-8	NSC	17 - 53
DS75322J	NSC	19 -110
DS75322N	NSC	20 - 1
DS75324J	♦NSC	19 -106
DS75324N	♦NSC	19 -107
DS75361J	NSC	32 - 20
DS75361N-8	NSC	32 - 21
DS75362J	NSC	32 - 22
DS75362N-8	NSC	32 - 23
DS75364J	NSC	19 - 69
DS75364N	NSC	19 - 70
DS75364N-8	NSC	19 - 71
DS75451N-8	NSC	22 - 6
DS75452N-8	NSC	22 - 7
DS75453N-8	NSC	22 - 8
DS75454N-8	NSC	22 - 9
DS75460J	NSC	22 - 57
DS75460N	NSC	22 - 58
DS75461N-8	NSC	22 - 30
DS75462N-8	NSC	22 - 31
DS75463N-8	NSC	22 - 32
DS75464N-8	NSC	22 - 33
DT2009	DTI	60 - 42
DT2010	DTI	60 - 43
DT5720	DTI	60 - 44
DT6812	DTI	60 - 45
ED-5	STX	56 - 76
ED-9	STX	56 - 77
ED-11	STX	56 - 78
ED-15	STX	56 - 79
EF68A50CP	THEF	59 - 50
EF6850CP	THEF	59 - 51
FLH351-7413	SIEG	55 - 50
FLH355-8413	SIEG	55 - 51
FLH551-7448	SIEG	46 - 58
FLH555-8448	SIEG	46 - 59
FLH601-74132	SIEG	55 - 59
FLH605-84132	SIEG	55 - 60
FLL101-74141	SIEG	25 - 60
FLL121-7446	SIEG	25 - 29
FLL121T-7447	SIEG	25 - 30
FLL121U-7446A	SIEG	25 - 31
FLL121V-7447A	SIEG	25 - 32
FLL125-8446	SIEG	25 - 33
FLL125T-8447	SIEG	25 - 34
FLL125U-8446A	SIEG	25 - 35
FLL125V-8447A	SIEG	25 - 36
FLY111-74150	SIEG	43 - 36
FLY115-84150	SIEG	43 - 37
FLY121-74151A	SIEG	42 - 81
FLY125-84151A	SIEG	42 - 82
FLY131-74153	SIEG	43 - 88
FLY135-84153	SIEG	43 - 89
FLY151-74155	SIEG	47 - 24
FLY155-84155	SIEG	47 - 25
FLY161-74156	SIEG	47 - 26
FLY165-84156	SIEG	47 - 27
FLY171-74157	SIEG	44 - 74
FLY175-84157	SIEG	44 - 75
G74SC237D#ai	GTE	46 - 39
G74SC237P#ai	GTE	46 - 40
G74SC238D#ai	GTE	46 - 41
G74SC238P#ai	GTE	46 - 42
G74SC540D#ai	GTE	11 - 22
G74SC540P#ai	GTE	11 - 23
G74SC541D#ai	GTE	11 - 37
G74SC541P#ai	GTE	11 - 38
G74SC545D#ai	GTE	50 - 3
G74SC545P#ai	GTE	50 - 4
G116BL	♦SIX	35 - 85
G117BL	♦SIX	35 - 90
G118BL	♦SIX	35 - 91
G119BL	♦SIX	35 - 63
G122BL	SIX	35 - 55
G123BL	♦SIX	35 - 74
G124AL	♦SIX	35 - 72
G124BL	SIX	35 - 73
G125AF	♦SIX	35 - 12
G126AF	♦SIX	35 - 13
G127AF	♦SIX	35 - 14
G128AF	♦SIX	35 - 15
G128AP	♦SIX	35 - 16
G128BF	♦SIX	35 - 17
G128BP	♦SIX	35 - 18
G129AF	♦SIX	35 - 19
G130AF	♦SIX	35 - 20
G131AF	♦SIX	35 - 21
G132AF	♦SIX	35 - 22
G4104CI#ai	♦GTE	31 - 68
G4104CM#ai	♦GTE	31 - 69
G4104P#ai	GTE	31 - 70
G4104PI#ai	GTE	31 - 71
G4320DI#ai	GTE	56 -103
G4320DM#ai	GTE	56 -104
G4320P#ai	♦GTE	56 -105
G4320PI#ai	GTE	56 -106
G4325CM#ai	♦GTE	56 -107
G4325DI#ai	GTE	56 -108
G4325P#ai	♦GTE	56 -109

♦-Mfr's data sheet available in microfilm service

Cur-In current D.A.T.A.BOOK
Obs-In this book
△-Registered with JEDEC by this manufacturer

1. TYPE No. CROSS INDEX

IN TYPE NUMBER SEQUENCE

TYPE No.	MFRS	Pg&Line
G4325PI#ai	GTE	56 -110
G4326DI#ai	GTE	57 - 1
G4326P#ai	♦GTE	57 - 2
G4326PI#ai	GTE	57 - 3
G5087DI	♦GTE	57 - 4
G5087P	♦GTE	57 - 5
G5087PI	♦GTE	57 - 6
G5089DI	♦GTE	57 - 7
G5089P	♦GTE	57 - 8
G5089PI	♦GTE	57 - 9
G8862P#ai	♦GTE	57 - 10
G8862PI#ai	♦GTE	57 - 11
G8863DI#ai	♦GTE	57 - 12
G8863PI#ai	♦GTE	58 - 25
GFB7404D	♦MULB	12 - 17
GFB7405D	♦MULB	12 - 18
GFB7440D	♦MULB	13 - 83
GFB74150	♦RTCF	43 - 38
GFB74151D	♦MULB	42 - 83
GFB74153	♦RTCF	43 - 90
GFB74155	♦RTCF	47 - 28
GFB74157	♦RTCF	44 - 76
GXB10114	RTCF	none
	SIC	
Repl.by 10114 Cur.		
GXB10115	RTCF	none
	SIC	VALG
Repl.by 10115 Cur.		
GXB10116	RTCF	none
	SIC	
Repl.by 10116 Cur.		
GXB10124D	♦MULB	none
♦PHIN	RTCF	
	SIC	
Repl.by 10124N Cur.		
GXB10125D	♦MULB	none
♦PHIN	RTCF	
	SIC	
Repl.by 10125N Cur.		
GXB10129D	♦MULB	none
♦PHIN	♦RTCF	
	SIC	
Repl.by 10129N Cur.		
GXB10132D	♦MULB	none
PHIN	RTCF	
	SIC	
Repl.by 10132N Cur.		
GXB10132P	♦MULB	none
PHIN	RTCF	
	SIC	
Repl.by 10132F Cur.		
GXB10134D	♦MULB	none
PHIN	RTCF	
	SIC	
Repl.by 10134N Cur.		
GXB10134P	MULB	none
PHIN	RTCF	
	SIC	
Repl.by 10134F Cur.		
GXB10158D	MULB	none
PHIN	♦RTCF	
	SIC	
Repl.by 10158N Cur.		
GXB10158P	MULB	none
PHIN	♦RTCF	
	SIC	
Repl.by 10158F Cur.		
GXB10159D	MULB	none
PHIN	RTCF	
	SIC	
Repl.by 10159N Cur.		
GXB10159P	MULB	none
PHIN	RTCF	
	SIC	
Repl.by 10159F Cur.		
GXB10161D	♦MULB	none
	♦SIC	
Repl.by 10161N Cur.		
GXB10162D	♦MULB	none
	SIC	
Repl.by 10162N Cur.		
GXB10164D	♦MULB	none
PHIN	RTCF	
	SIC	
Repl.by 10164N Cur.		
GXB10164P	♦MULB	none
PHIN	RTCF	
	SIC	
Repl.by 10164F Cur.		
GXB10165D	MULB	none
♦PHIN	RTCF	
	SIC	
Repl.by 10165N Cur.		
GXB10165P	MULB	none
♦PHIN	RTCF	
	SIC	
Repl.by 10165F Cur.		
GXB10171D	♦MULB	none
♦PHIN	RTCF	
	SIC	
Repl.by 10171N Cur.		
GXB10172B	MULB	none
RTCF	SIC	
Repl.by 10172N Cur.		
GXB10173D	♦MULB	none
PHIN	RTCF	
	SIC	
Repl.by 10173N Cur.		
GXB10173P	♦MULB	none
PHIN	RTCF	
	SIC	
Repl.by 10173F Cur.		
GXB10174D	♦MULB	none
cont.next col.		

TYPE No.	MFRS	Pg&Line
GXB10174D		
(cont.)	PHIN	
RTCF	SIC	
Repl.by 10174N Cur.		
GXB10174P	♦MULB	none
PHIN	RTCF	
	SIC	
Repl.by 10174F Cur.		
GXB10188D	MULB	none
PHIN	♦RTCF	
	SIC	
Repl.by 10188N Cur.		
GXB10188P	MULB	none
PHIN	♦RTCF	
	SIC	
Repl.by 10188F Cur.		
GXB10189D	MULB	none
PHIN	♦RTCF	
	SIC	
Repl.by 10189N Cur.		
GXB10189P	MULB	none
PHIN	♦RTCF	
	SIC	
Repl.by 10189F Cur.		
GXB10191D	♦MULB	none
PHIN	♦RTCF	
	SIC	
Repl.by 10191F Cur.		
H74SC137C	STX	46 - 7
H74SC137D	STX	46 - 8
H74SC137P	STX	46 - 9
H74SC138C	STX	46 - 10
H74SC138D	STX	46 - 11
H74SC138P	STX	46 - 12
H74SC139C	STX	46 - 30
H74SC139D	STX	46 - 31
H74SC139P	STX	46 - 32
H74SC237C	STX	46 - 13
H74SC237D	STX	46 - 14
H74SC237P	STX	46 - 15
H74SC238C	STX	46 - 16
H74SC238D	STX	46 - 17
H74SC238P	STX	46 - 18
H74SC239C	STX	46 - 33
H74SC239D	STX	46 - 34
H74SC239P	STX	46 - 35
H74SC240C	STX	16 - 44
H74SC240D	STX	16 - 45
H74SC240P	STX	16 - 46
H74SC241C	STX	16 - 47
H74SC241D	STX	16 - 48
H74SC241P	STX	16 - 49
H74SC242C	STX	50 - 8
H74SC242D	STX	50 - 9
H74SC242P	STX	50 - 10
H74SC243C	STX	50 - 11
H74SC243D	STX	50 - 12
H74SC243P	STX	50 - 13
H74SC244C	STX	16 - 50
H74SC244D	STX	16 - 51
H74SC244P	STX	16 - 52
H74SC245C	STX	50 - 14
H74SC245D	STX	50 - 15
H74SC245P	STX	50 - 16
H74SC540C	STX	16 - 53
H74SC540D	STX	16 - 54
H74SC540P	STX	16 - 55
H74SC541C	STX	16 - 56
H74SC541D	STX	16 - 57
H74SC541P	STX	16 - 58
HA16613P	HITJ	27 - 36
HD1-54C14	HAS	55 - 7
HD1-74C14	HAS	55 - 8
HD1-245	HAS	17 - 18
HD1-246	HAS	48 - 98
HD1-248	HAS	48 - 99
HD1-249	HAS	48 -100
HD1-545	HAS	17 - 19
HD1-546	HAS	48 -101
HD1-548	HAS	48 -102
HD1-549	HAS	48 -103
HD1-1489	HAS	49 - 38
HD1-1489A	HAS	49 - 44
HD1-6402-2	HAS	58 - 3
HD1-6402-9	HAS	58 - 4
HD1-6402A-2	HAS	58 - 5
HD1-6402A-9	HAS	58 - 6
HD1-6402C-9	HAS	58 - 7
HD1-6431-2	HAS	16 - 15
HD1-6431-9	HAS	16 - 16
HD1-6431A-2	HAS	16 - 27
HD1-6431A-9	HAS	16 - 28
HD1-6432-2	HAS	16 - 17
HD1-6432-9	HAS	16 - 18
HD1-6432A-2	HAS	16 - 29
HD1-6432A-9	HAS	16 - 30
HD1-6433-2	HAS	16 - 3
HD1-6433-9	HAS	16 - 4
HD1-6433A-2	HAS	16 - 9
HD1-6433A-9	HAS	16 - 10
HD1-6600-2	MMI	61 - 14
HD1-6600-5	MMI	61 - 15
HD1-6605-2	MMI	61 - 16
HD1-6605-5	MMI	61 - 17
HD3-6402-2	HAS	58 - 8
HD3-6402-9	HAS	58 - 9
HD3-6402A-2	HAS	58 - 10
HD3-6402A-9	HAS	58 - 11
HD3-6402C-9	HAS	58 - 12
HD3-6431-2	HAS	16 - 19
HD3-6431-9	HAS	16 - 20
HD3-6431A-2	HAS	16 - 31
HD3-6431A-9	HAS	16 - 32
HD3-6432-2	HAS	16 - 21

TYPE No.	MFRS	Pg&Line
HD3-6432-9	HAS	16 - 22
HD3-6432A-2	HAS	16 - 33
HD3-6432A-9	HAS	16 - 34
HD3-6433-2	HAS	16 - 5
HD3-6433-9	HAS	16 - 6
HD3-6433A-2	HAS	16 - 11
HD3-6433A-9	HAS	16 - 12
HD3-6495-2	HAS	11 - 27
HD3-6495-9	HAS	11 - 28
HD3-6495A-2	HAS	11 - 29
HD3-6495A-9	HAS	11 - 30
HD9-54C14	HAS	55 - 9
HD9-74C14	HAS	55 - 10
HD9-245	HAS	17 - 20
HD9-246	HAS	48 -104
HD9-248	HAS	48 -105
HD9-249	HAS	48 -106
HD9-545	HAS	17 - 21
HD9-546	HAS	48 -107
HD9-548	HAS	48 -108
HD9-549	HAS	48 -109
HD9-6431-2	HAS	16 - 23
HD9-6431-9	HAS	16 - 24
HD9-6431A-2	HAS	16 - 35
HD9-6431A-9	HAS	16 - 36
HD9-6432-2	HAS	16 - 25
HD9-6432-9	HAS	16 - 26
HD9-6432A-2	HAS	16 - 37
HD9-6432A-9	HAS	16 - 38
HD9-6433-2	HAS	16 - 7
HD9-6433-9	HAS	16 - 8
HD9-6433A-2	HAS	16 - 13
HD9-6433A-9	HAS	16 - 14
HD9-6495-2	HAS	11 - 31
HD9-6495-9	HAS	11 - 32
HD9-6495A-2	HAS	11 - 33
HD9-6495A-9	HAS	11 - 34
HD21S163	HITJ	42 - 31
HD21S164	HITJ	42 - 17
HD21S170	HITJ	46 - 50
HD21S171	HITJ	42 - 34
HD468A21	♦HITJ	none
Repl.by HD68A21 Cur.		
HD468A21P	♦HITJ	none
Repl.by HD68A21P Cur.		
HD468A50	♦HITJ	none
Repl.by HD68A50 Cur.		
HD468A52	♦HITJ	none
Repl.by HD68A52 Cur.		
HD468B21	♦HITJ	none
Repl.by HD68B21 Cur.		
HD468B21P	♦HITJ	none
Repl.by HD68B21P Cur.		
HD2922	HITJ	19 - 5
HD46821	♦HITJ	none
Repl.by HD6821 Cur.		
HD46821P	♦HITJ	none
Repl.by HD6821P Cur.		
HD46850	♦HITJ	none
Repl.by HD6850 Cur.		
HD46852	♦HITJ	none
Repl.by HD6852 Cur.		
HD100170	♦HITJ	46 - 43
HD102120	HITJ	16 - 67
HD102121	HITJ	48 - 27
HD103461	♦HITJ	51 - 2
HDD0815	ANA	29 - 83
HDD0815C	ANA	29 - 85
HDD0815E	ANA	29 - 84
HEF4007P	MULB	11 - 1
♦PHIN	SIC	
	VALG	
HEF4016P	MULB	33 - 29
PHIN	SIC	
	♦VALG	
HEF4019P	MULB	42 - 5
♦PHIN	SIC	
	♦VALG	
HEF4041P	MULB	31 - 16
♦PHIN	SIC	
	VALG	
HEF4051P	MULB	41 - 15
PHIN	SIC	
	♦VALG	
HEF4052P	MULB	41 - 47
PHIN	SIC	
	♦VALG	
HEF4053P	MULB	41 - 61
PHIN	SIC	
	♦VALG	
HEF4066P	MULB	33 - 30
PHIN	SIC	
	♦VALG	
HEF4067P	MULB	41 - 39
PHIN	SIC	
	VALG	
HEF4093P	♦MULB	55 - 2
♦PHIN	SIC	
	VALG	
HEF4511P	MULB	23 - 80
♦PHIN	SIC	
	VALG	
HEF4514P	MULB	46 - 22
♦PHIN	SIC	
	♦VALG	
HEF4515P	MULB	46 - 23
♦PHIN	SIC	
	♦VALG	
HEF4519P	MULB	42 - 6
♦PHIN	SIC	
	♦VALG	
HEF4555P	MULB	46 - 24
♦PHIN	SIC	
	♦VALG	

TYPE No.	MFRS	Pg&Line
HEF4556P	MULB	46 - 25
♦PHIN	SIC	
	♦VALG	
HEF4583BD	♦MULB	55 - 3
HEF4583BP	♦MULB	55 - 4
HEPC0900P-RT	MOTA	17 - 17
HEPC2002P-RT	MOTA	11 - 79
HEPC3004P-RT	MOTA	12 - 19
HI1-1080	♦HAS	28 - 96
HI1-1085	♦HAS	28 -108
HI1-5041-2	HAS	33 - 88
HI1-5041-5	HAS	33 - 89
HI1-5042-2	HAS	34 - 30
HI1-5042-5	HAS	34 - 31
HI1-5043-2	HAS	33 - 74
HI1-5043-5	HAS	33 - 75
HI1-5044-2	HAS	33 -100
HI1-5044-5	HAS	33 -101
HI1-5045-2	HAS	33 -104
HI1-5045-5	HAS	33 -105
HI1-5046-2	HAS	33 - 78
HI1-5046-5	HAS	33 - 79
HI1-5046A-2	HAS	33 - 80
HI1-5046A-5	HAS	33 - 81
HI3-200-2	HAS	33 - 14
HI3-200-4	HAS	33 - 15
HI3-200-5	HAS	33 - 16
HI3-201-5	HAS	33 - 31
HI3-506-5	HAS	41 - 40
HI3-506A-5	HAS	41 - 41
HI3-507-5	HAS	41 - 22
HI3-507A-5	HAS	41 - 23
HI3-508A-5	HAS	41 - 24
HI3-509A-5	HAS	41 - 9
HI3-1818A-5	HAS	41 - 25
HI3-1828A-5	HAS	41 - 10
HI9-200-2	HAS	33 - 17
HI9-200-4	HAS	33 - 18
HI9-200-5	HAS	33 - 19
HI9-201-2	HAS	33 - 32
HI9-201-4	HAS	33 - 33
HI9-201-5	HAS	33 - 34
HI9-1080	HAS	28 - 97
HI9-1085	HAS	28 -109
HI9-5040-2	HAS	33 - 86
HI9-5040-5	HAS	33 - 87
HI9-5041-2	HAS	33 - 90
HI9-5041-5	HAS	33 - 91
HI9-5042-2	HAS	34 - 32
HI9-5042-5	HAS	34 - 33
HI9-5043-2	HAS	34 - 36
HI9-5043-5	HAS	34 - 37
HI9-5044-2	HAS	33 -102
HI9-5044-5	HAS	33 -103
HI9-5045-2	HAS	33 -106
HI9-5045-5	HAS	33 -107
HI9-5046-2	HAS	33 - 82
HI9-5046-5	HAS	33 - 83
HI9-5046A-2	HAS	33 - 84
HI9-5046A-5	HAS	33 - 85
HI9-5047-2	HAS	33 -110
HI9-5047-5	HAS	34 - 1
HI9-5047A-2	HAS	34 - 2
HI9-5047A-5	HAS	34 - 3
HI9-5048-2	HAS	33 - 92
HI9-5048-5	HAS	33 - 93
HI9-5049-2	HAS	33 -108
HI9-5049-5	HAS	33 -109
HI9-5050-2	HAS	34 - 34
HI9-5050-5	HAS	34 - 35
HI9-5051-2	HAS	33 - 76
HI9-5051-5	HAS	33 - 77
HI516-2	HAS	41 - 55
HI516-5	HAS	41 - 56
HI518-2	HAS	41 - 50
HI518-5	HAS	41 - 51
HI565AKD/B1N	none	30 - 50
HI5900-2	♦HAS	58 - 1
HI5900-5	♦HAS	58 - 2
HLCD0540D	none	23 - 52
HLCD0540P	none	23 - 53
HLCD0541D	none	23 - 50
HLCD0541P	none	23 - 51
HLCD0542D	none	23 - 54
HLCD0542P	none	23 - 55
HLCD0548D	none	23 - 56
HLCD0548P	none	23 - 57
HMRDC-H4-16-2SS		58 - 26
	DDC	
HMSDC-H4-16-2SS		58 - 27
	DDC	
HMSDC-L4-16-2SS		58 - 28
	DDC	
HS9-1000	HAS	41 - 73
I424	ICC	11 - 85
ICH7201CDD	INL	19 - 23
ICH7201CGC	INL	19 - 24
ICH7201MDD	INL	19 - 25
ICH7201MGC	INL	19 - 26
ICL7103ACDI	DTL	61 - 2
	♦INL	
ICL7103ACPI	DTL	61 - 3
	♦INL	
ICL7103BCDI	♦INL	27 - 10
		56 - 64
ICL7103BCPI	♦INL	27 - 11
		56 - 65
ICL7103CDI	DTL	61 - 4
	♦INL	
ICL7103CPI	DTL	61 - 5
	♦INL	
ICL7112JJN	♦INL	30 - 29
ICL7112JPN	♦INL	30 - 5
ICL7112KJN	♦INL	30 - 30

TYPE No.	MFRS	Pg&Line
ICL7112KPN	♦INL	30 - 6
ICL7112LPN	♦INL	30 - 7
ICL7112SJN	♦INL	30 - 31
ICL7112TJN	♦INL	30 - 32
ICL7113JJN	♦INL	28 - 42
ICL7113JPN	♦INL	28 - 43
ICL7113KJN	♦INL	28 - 39
ICL7113KPN	♦INL	28 - 40
ICL7113LJN	♦INL	28 - 36
ICL7113LPN	♦INL	28 - 37
ICL7113SJN	♦INL	28 - 44
ICL7113TJN	♦INL	28 - 41
ICL7113UJN	♦INL	28 - 38
ICL7116CDL	DTL	27 - 1
ICL7116CPL	DTL	27 - 2
ICL7117CDL	DTL	27 - 3
ICL7117CPL	DTL	27 - 4
ICL8052ACDD∅	DTL	61 - 6
ICL8052ACPD∅	DTL	61 - 7
ICL8052CDD∅	DTL	61 - 8
ICL8052CPD∅	DTL	61 - 9
ICL8053ACDD	INL	59 - 31
ICL8053CDD	INL	59 - 32
IH5009CDA	DTL	36 - 21
IH5009CDE	DTL	36 - 22
IH5009CPA	DTL	36 - 23
IH5009CPE	DTL	36 - 24
IH5009MDA	DTL	36 - 25
IH5009MDE	DTL	36 - 26
IH5009MPA	DTL	36 - 27
IH5009MPE	DTL	36 - 28
IH5010CDA	DTL	38 - 16
IH5010CDE	DTL	38 - 17
IH5010CPA	DTL	38 - 18
IH5010CPE	DTL	38 - 19
IH5010MDA	DTL	38 - 20
IH5010MDE	DTL	38 - 21
IH5010MPA	DTL	38 - 22
IH5010MPE	DTL	38 - 23
IH5011CDA	DTL	36 - 29
IH5011CDD	DTL	36 - 30
IH5011CPA	DTL	36 - 31
IH5011CPD	DTL	36 - 32
IH5011MDA	DTL	36 - 33
IH5011MDD	DTL	36 - 34
IH5011MPA	DTL	36 - 35
IH5011MPD	DTL	36 - 36
IH5012CDA	DTL	38 - 24
IH5012CDD	DTL	38 - 25
IH5012CPA	DTL	38 - 26
IH5012CPD	DTL	38 - 27
IH5012MDA	DTL	38 - 28
IH5012MPA	DTL	38 - 29
IH5013CDA	DTL	36 - 37
IH5013CDE	DTL	36 - 38
IH5013CPA	DTL	36 - 39
IH5013CPE	DTL	36 - 40
IH5013MDA	DTL	36 - 41
IH5013MDE	DTL	36 - 42
IH5013MPA	DTL	36 - 43
IH5013MPE	DTL	36 - 44
IH5014CDA	DTL	38 - 30
IH5014CDE	DTL	38 - 31
IH5014CPA	DTL	38 - 32
IH5014CPE	DTL	38 - 33
IH5014MDA	DTL	38 - 34
IH5014MDE	DTL	38 - 35
IH5014MPA	DTL	38 - 36
IH5014MPE	DTL	38 - 37
IH5015CDA	DTL	36 - 45
IH5015CDD	DTL	36 - 46
IH5015CPA	DTL	36 - 47
IH5015CPD	DTL	36 - 48
IH5015MDA	DTL	36 - 49
IH5015MDD	DTL	36 - 50
IH5015MPA	DTL	36 - 51
IH5015MPD	DTL	36 - 52
IH5016CDA	DTL	38 - 38
IH5016CDD	DTL	38 - 39
IH5016CPA	DTL	38 - 40
IH5016CPD	DTL	38 - 41
IH5016MDA	DTL	38 - 42
IH5016MDD	DTL	38 - 43
IH5016MPA	DTL	38 - 44
IH5016MPD	DTL	38 - 45
IH5017CDA	DTL	36 - 53
IH5017CDE	DTL	36 - 54
IH5017CPD	DTL	36 - 55
IH5017CPE	DTL	38 - 46
IH5017MDA	DTL	36 - 56
IH5017MDE	DTL	36 - 57
IH5017MPD	DTL	36 - 58
IH5017MPE	DTL	36 - 59
IH5018CDA	DTL	38 - 47
IH5018CDE	DTL	38 - 48
IH5018CPD	DTL	38 - 49
IH5018CPE	DTL	38 - 50
IH5018MDA	DTL	38 - 51
IH5018MDE	DTL	38 - 52
IH5018MPD	DTL	38 - 53
IH5018MPE	DTL	38 - 54
IH5019CDA	DTL	36 - 60
IH5019CDD	DTL	36 - 61
IH5019CPD	DTL	36 - 62
IH5019CPE	DTL	36 - 63
IH5019MDA	DTL	36 - 64
IH5019MDD	DTL	36 - 65
IH5019MPD	DTL	36 - 66
IH5019MPE	DTL	36 - 67
IH5020CDA	DTL	38 - 55
IH5020CDD	DTL	38 - 56
IH5020CPD	DTL	38 - 57
IH5020CPE	DTL	38 - 58
IH5020MDA	DTL	38 - 59

INTERFACE

♦-Mfr's data sheet available in microfilm service

Cur-In current D.A.T.A.BOOK
Δ-Registered with JEDEC by this manufacturer

Obs-In this book

1. TYPE No. CROSS INDEX

IN TYPE NUMBER SEQUENCE

TYPE No.	MFRS	Pg&Line
IH5020MDD	DTL	38 - 60
IH5020MPD	DTL	38 - 61
IH5020MPE	DTL	38 - 62
IH5021CDA	DTL	36 - 68
IH5021CDE	DTL	36 - 69
IH5021CPD	DTL	36 - 70
IH5021CPE	DTL	36 - 71
IH5021MDA	DTL	36 - 72
IH5021MDE	DTL	36 - 73
IH5021MPD	DTL	36 - 74
IH5021MPE	DTL	36 - 75
IH5022CDA	DTL	38 - 63
IH5022CDD	DTL	38 - 64
IH5022CDE	DTL	38 - 65
IH5022CPD	DTL	38 - 66
IH5022CPE	DTL	38 - 67
IH5022MDA	DTL	38 - 68
IH5022MDD	DTL	38 - 69
IH5022MDE	DTL	38 - 70
IH5022MPD	DTL	38 - 71
IH5022MPE	DTL	38 - 72
IH5023CDA	DTL	36 - 76
IH5023CDD	DTL	36 - 77
IH5023CDE	DTL	36 - 78
IH5023CPD	DTL	36 - 79
IH5023CPE	DTL	36 - 80
IH5023MDA	DTL	36 - 81
IH5023MDD	DTL	36 - 82
IH5023MDE	DTL	36 - 83
IH5023MPD	DTL	36 - 84
IH5023MPE	DTL	36 - 85
IH5024CDD	DTL	38 - 73
IH5024CDE	DTL	38 - 74
IH5024CPD	DTL	38 - 75
IH5024CPE	DTL	38 - 76
IH5024MDA	DTL	38 - 77
IH5024MDD	DTL	38 - 78
IH5024MDE	DTL	38 - 79
IH5024MPD	DTL	38 - 80
IH5024MPE	DTL	38 - 81
IH5070CDI	INL	41 - 57
IH5070MDI	INL	41 - 58
IH5110IDE⊠	DTL	54 - 2
IH5110MDE⊠	DTL	54 - 3
IH5111IDE⊠	DTL	54 - 4
IH5111MDE⊠	DTL	54 - 5
IM5001CDD	♦INL	17 - 65
IM5001MDD	♦INL	17 - 66
IM5001NDD	♦INL	17 - 67
IM5003ACDD	INL	19 - 35
IM5003ACPD	INL	19 - 36
IM5003ACTC	INL	19 - 37
IM5003AMDD	INL	19 - 38
IM5003AMPD	INL	19 - 39
IM5003AMTC	INL	19 - 40
IM5003CDD	♦INL	19 - 41
IM5003CPD	♦INL	19 - 42
IM5003CTC	♦INL	19 - 43
IM5003MDD	♦INL	19 - 44
IM5003MPD	♦INL	19 - 45
IM5003MTC	♦INL	19 - 46
IM5011CDD	♦INL	17 - 68
IM5011MDD	♦INL	17 - 69
IM5011NDD	♦INL	17 - 70
IM5013ACDD	♦INL	19 - 27
IM5013ACTC	♦INL	19 - 28
IM5013AMDD	♦INL	19 - 29
IM5013AMTC	♦INL	19 - 30
IM5013CDD	INL	19 - 31
IM5013CTC	INL	19 - 32
IM5013MDD	INL	19 - 33
IM5013MTC	INL	19 - 34
ITS7318CDA	DTL	38 - 82
ITS7318CDD	DTL	38 - 83
ITS7318CDE	DTL	38 - 84
ITS7318CPA	DTL	38 - 85
ITS7318CPD	DTL	38 - 86
ITS7318CPE	DTL	38 - 87
ITS7318MDA	DTL	38 - 88
ITS7318MDD	DTL	38 - 89
ITS7318MDE	DTL	38 - 90
ITS7318MPA	DTL	38 - 91
ITS7318MPD	DTL	38 - 92
ITS7318MPE	DTL	38 - 93
ITS7319CDA	DTL	36 - 86
ITS7319CDD	DTL	36 - 87
ITS7319CDE	DTL	36 - 88
ITS7319CPA	DTL	36 - 89
ITS7319CPD	DTL	36 - 90
ITS7319CPE	DTL	36 - 91
ITS7319MDA	DTL	36 - 92
ITS7319MDD	DTL	36 - 93
ITS7319MDE	DTL	36 - 94
ITS7319MPA	DTL	36 - 95
ITS7319MPD	DTL	36 - 96
ITS7319MPE	DTL	36 - 97
ITS7320CDA	DTL	38 - 94
ITS7320CDD	DTL	38 - 95
ITS7320CDE	DTL	38 - 96
ITS7320CPA	DTL	38 - 97
ITS7320CPD	DTL	38 - 98
ITS7320CPE	DTL	38 - 99
ITS7320MDA	DTL	38 -100
ITS7320MDD	DTL	38 -101
ITS7320MDE	DTL	38 -102
ITS7320MPA	DTL	38 -103
ITS7320MPD	DTL	38 -104
ITS7320MPE	DTL	38 -105
ITS7321CDA	DTL	36 - 98
ITS7321CDD	DTL	36 - 99
ITS7321CDE	DTL	36 -100
ITS7321CPA	DTL	36 -101
ITS7321CPD	DTL	36 -102
ITS7321CPE	DTL	36 -103

TYPE No.	MFRS	Pg&Line
ITS7321MDA	DTL	36 -104
ITS7321MDD	DTL	36 -105
ITS7321MDE	DTL	36 -106
ITS7321MPA	DTL	36 -107
ITS7321MPD	DTL	36 -108
ITS7321MPE	DTL	36 -109
ITS7322CDA	DTL	38 -106
ITS7322CDD	DTL	38 -107
ITS7322CDE	DTL	38 -108
ITS7322CPA	DTL	38 -109
ITS7322CPD	DTL	38 -110
ITS7322CPE	DTL	39 - 1
ITS7322MDA	DTL	39 - 2
ITS7322MDD	DTL	39 - 3
ITS7322MDE	DTL	39 - 4
ITS7322MPA	DTL	39 - 5
ITS7322MPD	DTL	39 - 6
ITS7322MPE	DTL	39 - 7
ITS7323CDA	DTL	36 -110
ITS7323CDD	DTL	37 - 1
ITS7323CDE	DTL	37 - 2
ITS7323CPA	DTL	37 - 3
ITS7323CPD	DTL	37 - 4
ITS7323CPE	DTL	37 - 5
ITS7323MDA	DTL	37 - 6
ITS7323MDD	DTL	37 - 7
ITS7323MDE	DTL	37 - 8
ITS7323MPA	DTL	37 - 9
ITS7323MPD	DTL	37 - 10
ITS7323MPE	DTL	37 - 11
ITS7324CDA	DTL	39 - 8
ITS7324CDD	DTL	39 - 9
ITS7324CDE	DTL	39 - 10
ITS7324CPA	DTL	39 - 11
ITS7324CPD	DTL	39 - 12
ITS7324CPE	DTL	39 - 13
ITS7324MDA	DTL	39 - 14
ITS7324MDD	DTL	39 - 15
ITS7324MDE	DTL	39 - 16
ITS7324MPA	DTL	39 - 17
ITS7324MPD	DTL	39 - 18
ITS7324MPE	DTL	39 - 19
ITS7325CDA	DTL	37 - 12
ITS7325CDD	DTL	37 - 13
ITS7325CDE	DTL	37 - 14
ITS7325CPA	DTL	37 - 15
ITS7325CPD	DTL	37 - 16
ITS7325CPE	DTL	37 - 17
ITS7325MDA	DTL	37 - 18
ITS7325MDD	DTL	37 - 19
ITS7325MDE	DTL	37 - 20
ITS7325MPA	DTL	37 - 21
ITS7325MPD	DTL	37 - 22
ITS7325MPE	DTL	37 - 23
ITS7326CDA	DTL	39 - 20
ITS7326CDD	DTL	39 - 21
ITS7326CDE	DTL	39 - 22
ITS7326CPA	DTL	39 - 23
ITS7326CPD	DTL	39 - 24
ITS7326CPE	DTL	39 - 25
ITS7326MDA	DTL	39 - 26
ITS7326MDD	DTL	39 - 27
ITS7326MDE	DTL	39 - 28
ITS7326MPA	DTL	39 - 29
ITS7326MPD	DTL	39 - 30
ITS7326MPE	DTL	39 - 31
ITS7327CDA	DTL	37 - 24
ITS7327CDD	DTL	37 - 25
ITS7327CDE	DTL	37 - 26
ITS7327CPA	DTL	37 - 27
ITS7327CPD	DTL	37 - 28
ITS7327CPE	DTL	37 - 29
ITS7327MDA	DTL	37 - 30
ITS7327MDD	DTL	37 - 31
ITS7327MDE	DTL	37 - 32
ITS7327MPA	DTL	37 - 33
ITS7327MPD	DTL	37 - 34
ITS7327MPE	DTL	37 - 35
ITS7328CDA	DTL	39 - 32
ITS7328CDD	DTL	39 - 33
ITS7328CDE	DTL	39 - 34
ITS7328CPA	DTL	39 - 35
ITS7328CPD	DTL	39 - 36
ITS7328CPE	DTL	39 - 37
ITS7328MDA	DTL	39 - 38
ITS7328MDD	DTL	39 - 39
ITS7328MDE	DTL	39 - 40
ITS7328MPA	DTL	39 - 41
ITS7328MPD	DTL	39 - 42
ITS7328MPE	DTL	39 - 43
ITS7329CDA	DTL	37 - 36
ITS7329CDD	DTL	37 - 37
ITS7329CDE	DTL	37 - 38
ITS7329CPA	DTL	37 - 39
ITS7329CPD	DTL	37 - 40
ITS7329CPE	DTL	37 - 41
ITS7329MDA	DTL	37 - 42
ITS7329MDD	DTL	37 - 43
ITS7329MDE	DTL	37 - 44
ITS7329MPA	DTL	37 - 45
ITS7329MPD	DTL	37 - 46
ITS7329MPE	DTL	37 - 47
ITS7330CDA	DTL	39 - 44
ITS7330CDD	DTL	39 - 45
ITS7330CDE	DTL	39 - 46
ITS7330CPA	DTL	39 - 47
ITS7330CPD	DTL	39 - 48
ITS7330CPE	DTL	39 - 49
ITS7330MDA	DTL	39 - 50
ITS7330MDD	DTL	39 - 51
ITS7330MDE	DTL	39 - 52
ITS7330MPA	DTL	39 - 53
ITS7330MPD	DTL	39 - 54
ITS7330MPE	DTL	39 - 55

TYPE No.	MFRS	Pg&Line
ITS7331CDA	DTL	37 - 48
ITS7331CDD	DTL	37 - 49
ITS7331CDE	DTL	37 - 50
ITS7331CPA	DTL	37 - 51
ITS7331CPD	DTL	37 - 52
ITS7331CPE	DTL	37 - 53
ITS7331MDA	DTL	37 - 54
ITS7331MDD	DTL	37 - 55
ITS7331MDE	DTL	37 - 56
ITS7331MPA	DTL	37 - 57
ITS7331MPD	DTL	37 - 58
ITS7331MPE	DTL	37 - 59
ITS7332CDA	DTL	39 - 56
ITS7332CDD	DTL	39 - 57
ITS7332CDE	DTL	39 - 58
ITS7332CPA	DTL	39 - 59
ITS7332CPD	DTL	39 - 60
ITS7332CPE	DTL	39 - 61
ITS7332MDA	DTL	39 - 62
ITS7332MDD	DTL	39 - 63
ITS7332MDE	DTL	39 - 64
ITS7332MPA	DTL	39 - 65
ITS7332MPD	DTL	39 - 66
ITS7332MPE	DTL	39 - 67
ITS7333CDA	DTL	37 - 60
ITS7333CDD	DTL	37 - 61
ITS7333CDE	DTL	37 - 62
ITS7333CPA	DTL	37 - 63
ITS7333CPD	DTL	37 - 64
ITS7333CPE	DTL	37 - 65
ITS7333MDA	DTL	37 - 66
ITS7333MDD	DTL	37 - 67
ITS7333MDE	DTL	37 - 68
ITS7333MPA	DTL	37 - 69
ITS7333MPD	DTL	37 - 70
ITS7333MPE	DTL	37 - 71
ITS7334CDA	DTL	39 - 68
ITS7334CDD	DTL	39 - 69
ITS7334CDE	DTL	39 - 70
ITS7334CPA	DTL	39 - 71
ITS7334CPD	DTL	39 - 72
ITS7334CPE	DTL	39 - 73
ITS7334MDA	DTL	39 - 74
ITS7334MDD	DTL	39 - 75
ITS7334MDE	DTL	39 - 76
ITS7334MPA	DTL	39 - 77
ITS7334MPD	DTL	39 - 78
ITS7334MPE	DTL	39 - 79
ITS7335CDA	DTL	37 - 72
ITS7335CDD	DTL	37 - 73
ITS7335CDE	DTL	37 - 74
ITS7335CPA	DTL	37 - 75
ITS7335CPD	DTL	37 - 76
ITS7335CPE	DTL	37 - 77
ITS7335MDA	DTL	37 - 78
ITS7335MDD	DTL	37 - 79
ITS7335MDE	DTL	37 - 80
ITS7335MPA	DTL	37 - 81
ITS7335MPD	DTL	37 - 82
ITS7335MPE	DTL	37 - 83
ITS7336CDA	DTL	39 - 80
ITS7336CDD	DTL	39 - 81
ITS7336CDE	DTL	39 - 82
ITS7336CPA	DTL	39 - 83
ITS7336CPD	DTL	39 - 84
ITS7336CPE	DTL	39 - 85
ITS7336MDA	DTL	39 - 86
ITS7336MDD	DTL	39 - 87
ITS7336MDE	DTL	39 - 88
ITS7336MPA	DTL	39 - 89
ITS7336MPD	DTL	39 - 90
ITS7336MPE	DTL	39 - 91
ITS7337CDA	DTL	37 - 84
ITS7337CDD	DTL	37 - 85
ITS7337CDE	DTL	37 - 86
ITS7337CPA	DTL	37 - 87
ITS7337CPD	DTL	37 - 88
ITS7337CPE	DTL	37 - 89
ITS7337MDA	DTL	37 - 90
ITS7337MDD	DTL	37 - 91
ITS7337MDE	DTL	37 - 92
ITS7337MPA	DTL	37 - 93
ITS7337MPD	DTL	37 - 94
ITS7337MPE	DTL	37 - 95
ITS7338CDA	DTL	39 - 92
ITS7338CDD	DTL	39 - 93
ITS7338CDE	DTL	39 - 94
ITS7338CPA	DTL	39 - 95
ITS7338CPD	DTL	39 - 96
ITS7338CPE	DTL	39 - 97
ITS7338MDA	DTL	39 - 98
ITS7338MDD	DTL	39 - 99
ITS7338MDE	DTL	39 -100
ITS7338MPA	DTL	39 -101
ITS7338MPD	DTL	39 -102
ITS7338MPE	DTL	39 -103
ITS7339CDA	DTL	37 - 96
ITS7339CDD	DTL	37 - 97
ITS7339CDE	DTL	37 - 98
ITS7339CPA	DTL	37 - 99
ITS7339CPD	DTL	37 -100
ITS7339CPE	DTL	37 -101
ITS7339MDA	DTL	37 -102
ITS7339MDD	DTL	37 -103
ITS7339MDE	DTL	37 -104
ITS7339MPA	DTL	37 -105
ITS7339MPD	DTL	37 -106
ITS7339MPE	DTL	37 -107
ITS7340CDA	DTL	39 -104
ITS7340CDD	DTL	39 -105
ITS7340CDE	DTL	39 -106
ITS7340CPA	DTL	39 -107
ITS7340CPD	DTL	39 -108
ITS7340CPE	DTL	39 -109

TYPE No.	MFRS	Pg&Line
ITS7340MDA	DTL	39 -110
ITS7340MDD	DTL	40 - 1
ITS7340MDE	DTL	40 - 2
ITS7340MPA	DTL	40 - 3
ITS7340MPD	DTL	40 - 4
ITS7340MPE	DTL	40 - 5
ITS7341CDA	DTL	37 -108
ITS7341CDD	DTL	37 -109
ITS7341CDE	DTL	37 -110
ITS7341CPA	DTL	38 - 1
ITS7341CPD	DTL	38 - 2
ITS7341CPE	DTL	38 - 3
ITS7341MDD	DTL	38 - 4
ITS7341MDE	DTL	38 - 5
ITS7341MPA	DTL	38 - 6
ITS7341MPD	DTL	38 - 7
ITS7341MPE	DTL	38 - 8
ITT54H04J	ITTG	12 - 20
ITT54H05J	ITTG	12 - 21
ITT54H40J	ITTG	13 - 84
ITT74H04J	ITTG	12 - 22
ITT74H04N	ITTG	12 - 23
ITT74H05J	ITTG	12 - 24
ITT74H05N	ITTG	12 - 25
ITT74H40J	ITTG	13 - 85
ITT74H40N	ITTG	13 - 86
ITT74LS04N	♦ITTG	12 - 26
ITT74LS13N	♦ITTG	55 - 40
ITT74LS14N	♦ITTG	55 - 49
ITT74LS138N	♦ITTG	46 - 71
ITT74LS139N	♦ITTG	47 - 4
ITT74LS151N	♦ITTG	42 - 70
ITT491-5N	♦ITTG	24 - 61
ITT492-5N	♦ITTG	24 - 63
ITT508-5N	♦ITTG	24 - 65
ITT509-5N	♦ITTG	24 - 66
ITT514-5N	♦ITTG	24 - 67
ITT546A-5N	♦ITTG	24 - 64
ITT548-5N	♦ITTG	24 - 68
ITT558-5N	ITTG	23 - 8
ITT1488-1J	♦ITTG	16 - 61
ITT1488-5J	♦ITTG	16 - 62
ITT1489-1J	♦ITTG	48 - 28
ITT1489-5J	♦ITTG	48 - 29
ITT1489A-1J	♦ITTG	48 - 30
ITT1489A-5J	♦ITTG	48 - 31
ITT5404J	♦ITTG	12 - 27
ITT5405J	♦ITTG	12 - 28
ITT5406J	ITTG	13 - 57
ITT5407J	ITTG	15 - 4
ITT5413J	ITTG	55 - 52
ITT5416J	ITTG	13 - 58
ITT5417J	ITTG	15 - 5
ITT5437J	ITTG	14 - 8
ITT5520J	ITTG	51 - 37
ITT5520N	ITTG	51 - 38
ITT5521J	ITTG	51 - 25
ITT5521N	ITTG	51 - 26
ITT5522J	ITTG	51 - 39
ITT5522N	ITTG	51 - 40
ITT5523J	ITTG	51 - 27
ITT5523N	ITTG	51 - 28
ITT5524J	ITTG	52 - 61
ITT5524N	ITTG	52 - 62
ITT5525J	ITTG	52 - 14
ITT5525N	ITTG	52 - 15
ITT5528J	ITTG	52 - 63
ITT5528N	ITTG	52 - 64
ITT5529J	ITTG	52 - 16
ITT5529N	ITTG	52 - 17
ITT7140	♦ITTG	48 - 97
ITT7141	♦ITTG	16 - 89
ITT7404J	♦ITTG	12 - 29
ITT7404N	♦ITTG	12 - 30
ITT7405J	♦ITTG	12 - 31
ITT7405N	♦ITTG	12 - 32
ITT7406J	ITTG	13 - 59
ITT7406N	ITTG	13 - 60
ITT7407J	ITTG	15 - 6
ITT7407N	ITTG	15 - 7
ITT7413J	ITTG	55 - 53
ITT7413N	ITTG	55 - 54
ITT7416J	ITTG	13 - 61
ITT7416N	ITTG	13 - 62
ITT7417J	ITTG	15 - 8
ITT7417N	ITTG	15 - 9
ITT7437J	ITTG	14 - 9
ITT7437N	ITTG	14 - 10
ITT7520J	♦ITTG	51 - 51
ITT7520N	♦ITTG	51 - 52
ITT7521J	♦ITTG	51 - 29
ITT7521N	♦ITTG	51 - 30
ITT7522J	♦ITTG	51 - 53
ITT7522N	♦ITTG	51 - 54
ITT7523J	♦ITTG	51 - 31
ITT7523N	♦ITTG	51 - 32
ITT7524J	♦ITTG	52 -104
ITT7524N	♦ITTG	52 -105
ITT7525J	♦ITTG	52 - 18
ITT7525N	♦ITTG	52 - 19
ITT7528J	♦ITTG	52 -106
ITT7528N	♦ITTG	52 -107
ITT7529J	♦ITTG	52 - 20
ITT7529N	♦ITTG	52 - 21
ITT9309-1D	ITTG	43 - 91
ITT9309-5D	ITTG	43 - 92
ITT9309-5N	ITTG	43 - 93
ITT9312-1D	ITTG	42 - 84
ITT9312-5D	ITTG	42 - 85
ITT9312-5N	ITTG	42 - 86
ITT9322-1D	ITTG	44 - 77
ITT9322-5D	ITTG	44 - 78
ITT9322-5N	ITTG	44 - 79
ITT9614-1J	♦ITTG	16 -102

TYPE No.	MFRS	Pg&Line
ITT9614-5J	♦ITTG	16 -103
ITT9615-1J	♦ITTG	48 - 5
ITT9615-5J	♦ITTG	48 - 6
ITT55138J	♦ITTG	50 - 82
ITT55138N	♦ITTG	50 - 83
ITT55234J	ITTG	52 - 65
ITT55235J	ITTG	52 - 22
ITT55325J	♦ITTG	20 - 40
ITT55325N	♦ITTG	20 - 41
ITT74145J	ITTG	25 - 10
ITT74145N	ITTG	25 - 11
ITT74151J	ITTG	42 - 87
ITT74151N	ITTG	42 - 88
ITT75138J	♦ITTG	50 - 84
ITT75138N	♦ITTG	50 - 85
ITT75234J	♦ITTG	52 -108
ITT75235J	♦ITTG	52 - 23
ITT75324B	♦ITTG	20 - 19
ITT75324J	♦ITTG	20 - 20
ITT75324N	♦ITTG	20 - 21
ITT75325J	♦ITTG	20 - 42
ITT75325N	♦ITTG	20 - 43
ITT75361AJ	♦ITTG	31 - 72
ITT75361AN	♦ITTG	31 - 73
ITT75361AP	♦ITTG	31 - 74
ITT75365J	♦ITTG	31 - 75
ITT75365N	♦ITTG	31 - 76
JSFC404	♦THEF	12 - 33
JSFC440	THEF	14 - 11
LAS8100	♦LAM	21 - 33
LAS8100P	♦LAM	21 - 34
LAS8101	♦LAM	21 - 35
LB1470	TSAJ	23 - 11
LD110CJ	♦INL	59 - 33
	SIX	
LD110CP	♦INL	59 - 34
LD111CJ	♦INL	59 - 99
	SIX	
LD111CJ#	SIX	59 -100
LD111CP	♦INL	59 -101
LD114CR	♦INL	59 -102
	SIX	
LD114CR#	SIX	59 -103
LD121A	♦SIX	59 -104
LD121CJ	♦SIX	59 -105
LD130BP	SIX	56 - 85
LD130CJ	SIX	56 - 86
LD131CJ	SIX	56 - 87
LF198	♦NSC	54 - 12
LF298	♦NSC	54 - 13
LF398	♦NSC	54 - 14
LF12201D	♦NSC	34 - 73
LF12201N	♦NSC	34 - 74
LF12202D	♦NSC	34 - 52
LF12202N	♦NSC	34 - 53
LF12331D	♦NSC	34 - 54
LF12331N	♦NSC	34 - 55
LF12332D	♦NSC	34 - 75
LF12332N	♦NSC	34 - 76
LF12333D	♦NSC	34 - 69
LF12333N	♦NSC	34 - 70
LF12508D	♦NSC	41 - 1
LF12509D	NSC	41 - 4
LF13300D	♦NSC	61 - 10
LM1408J-6	♦NSC	29 - 4
LM1408J-7	♦NSC	28 -104
LM1408J-8	♦NSC	28 - 72
LM1408N-6	♦NSC	29 - 5
LM1408N-7	♦NSC	28 -105
LM1408N-8	♦NSC	28 - 73
LM1508D-8	♦NSC	28 - 74
LM1508J-8	♦NSC	28 - 75
LM8521	TSAJ	23 - 46
LPD4101	♦LAM	21 - 11
LPD4102	♦LAM	21 - 12
LPD4103	♦LAM	21 - 13
LPD4104	♦LAM	21 - 14
LPD4105	♦LAM	21 - 15
LPD4106	♦LAM	21 - 16
M002T1	♦SGSI	19 - 52
M004T1	♦SGSI	24 - 41
M004T2	SGSI	24 - 42
M5A26L532P	none	48 -110
M5S004P	MITJ	13 - 26
M5S005P	MITJ	13 - 27
M5S040P	MITJ	13 -106
M5S151P	MITJ	43 - 21
M5S157P	MITJ	45 - 14
M5S158P	MITJ	45 - 15
M5S251P	MITJ	43 - 22
M5S257P	MITJ	45 - 16
M5S258P	MITJ	45 - 17
M74LS125P	MITJ	14 - 59
M74LS126P	MITJ	14 - 60
M74LS365P	MITJ	14 -104
M74LS366P	MITJ	13 - 28
M74LS367P	MITJ	14 -105
M74LS368P	MITJ	13 - 29
M74LS620P#1	MITJ	13 - 76
M956	none	57 - 13
M4049BP#1	MITJ	11 - 13
M4050BP#1	MITJ	11 - 35
M5325P	MITJ	17 - 42
M5932P	MITJ	11 - 69
M5935P	MITJ	11 - 49
M5936P	MITJ	11 - 50
M5937P	MITJ	11 - 51
M54501Y	MITJ	22 - 78
M54520K	MITJ	22 - 82
MB00080	ANS	30 - 25
MB84016	FCAJ	34 - 56
MB84016M	FCAJ	34 - 57
MB84049	FCAJ	11 - 73
MB84049M	FCAJ	11 - 74

♦-Mfr's data sheet available in microfilm service

Cur-In current D.A.T.A.BOOK
Obs-In this book
Δ-Registered with JEDEC by this manufacturer

1. TYPE No. CROSS INDEX

IN TYPE NUMBER SEQUENCE

TYPE No.	MFRS	Pg&Line
MB84050	FCAJ	11 - 76
MB84050M	FCAJ	11 - 77
MB84051	FCAJ	41 - 13
MB84051M	FCAJ	41 - 14
MB84052	FCAJ	41 - 45
MB84052M	FCAJ	41 - 46
MB84053	FCAJ	41 - 59
MB84053M	FCAJ	41 - 60
MB84069	FCAJ	11 - 7
MB84069M	FCAJ	11 - 8
MC8T26L	MOTA	50 - 40
MC8T26P	MOTA	50 - 41
MC68A52CL	MOTA	61 - 30
MC68A52CP	MOTA	61 - 31
MC419F	MOTA	17 - 56
MC419L,P%	MOTA	17 - 57
MC429F	MOTA	12 - 34
MC429L,P%	♦MOTA	12 - 35
MC469F	MOTA	17 - 58
MC469L,P%	MOTA	17 - 59
MC479F	MOTA	12 - 36
MC479L,P%	MOTA	12 - 37
MC519F	MOTA	17 - 60
MC519L	MOTA	17 - 61
MC529F	♦MOTA	12 - 38
MC529L	♦MOTA	12 - 39
MC569F	MOTA	17 - 62
MC569L	MOTA	17 - 63
MC579F	MOTA	12 - 40
MC579L	MOTA	12 - 41
MC697	MOTA	13 - 75
MC834F	MOTA	11 - 60
MC834L	MOTA	11 - 61
MC835F	MOTA	11 - 62
MC836F	MOTA	11 - 63
MC837F	MOTA	11 - 64
MC840F	MOTA	11 - 65
MC841F	MOTA	11 - 66
MC843G	♦MOTA	11 - 39
MC889AP	♦MOTA	11 - 81
MC889P	♦MOTA	11 - 80
MC899P	MOTA	11 - 78
MC934F	MOTA	11 - 52
MC935F	MOTA	11 - 53
MC936F	MOTA	11 - 54
MC937F	MOTA	11 - 55
MC940F	MOTA	11 - 56
MC941F	MOTA	11 - 57
MC943G	♦MOTA	11 - 40
MC1017P	MOTA	31 - 86
MC1018P	MOTA	31 - 92
MC1020P	MOTA	48 - 22
MC1023P	MOTA	19 - 15
MC1026P	MOTA	19 - 16
MC1028P	MOTA	42 - 26
MC1035P	MOTA	48 - 11
MC1039P	MOTA	31 - 95
MC1045P	MOTA	24 - 36
MC1066P	MOTA	48 - 12
MC1067P	MOTA	31 - 89
MC1068P	MOTA	31 - 99
MC1217F	MOTA	31 - 87
MC1217L	MOTA	31 - 88
MC1218F	MOTA	31 - 93
MC1218L	MOTA	31 - 94
MC1220F	MOTA	48 - 23
MC1220L	MOTA	48 - 24
MC1223F	MOTA	19 - 17
MC1223L	MOTA	19 - 18
MC1226F	MOTA	19 - 19
MC1226L	MOTA	19 - 20
MC1228F	MOTA	42 - 27
MC1228L	MOTA	42 - 28
MC1235F	MOTA	48 - 13
MC1235L	MOTA	48 - 14
MC1239L	MOTA	31 - 96
MC1245F	MOTA	24 - 37
MC1245L	MOTA	24 - 38
MC1266F	MOTA	48 - 15
MC1266L	MOTA	48 - 16
MC1267F	MOTA	31 - 90
MC1267L	MOTA	31 - 91
MC1268F	MOTA	31 -100
MC1268L	MOTA	31 -101
MC1407L	MOTA	56 - 16
MC1440F	MOTA	51 - 7
MC1440G	MOTA	51 - 8
MC1440L	MOTA	51 - 9
MC1440P	MOTA	51 - 10
MC1441F	MOTA	51 - 11
MC1441L	MOTA	51 - 12
MC1507L	MOTA	56 - 17
MC1540F	MOTA	51 - 13
MC1540G	MOTA	51 - 14
MC1540L	MOTA	51 - 15
MC1540P	MOTA	51 - 16
MC1541F	♦MOTA	51 - 17
MC1541L	♦MOTA	51 - 18
MC1543L	♦MOTA	51 - 79
MC1544L	♦MOTA	51 - 70
MC2016F	MOTA	12 - 42
MC2016L,P%	MOTA	12 - 43
MC2065F	MOTA	17 - 73
MC2065L,P%	MOTA	17 - 74
MC2066F	MOTA	12 - 44
MC2066L,P%	MOTA	12 - 45
MC2116F	MOTA	12 - 46
MC2116L	MOTA	12 - 47
MC2165F	MOTA	17 - 75
MC2165L	MOTA	17 - 76
MC2166F	MOTA	12 - 48
MC2166L	MOTA	12 - 49
MC2652L	MOTA	59 - 90
MC2652P2	MOTA	59 - 91
MC2652P	MOTA	59 - 92
MC2652S2	MOTA	59 - 93
MC2652S	MOTA	59 - 94
MC3008F	MOTA	12 - 50
MC3008L	MOTA	12 - 51
MC3008P	MOTA	12 - 52
MC3108F	MOTA	12 - 53
MC3108L	MOTA	12 - 54
MC3245L	MOTA	19 - 1
MC3245P	MOTA	19 - 2
MC3410CP	MOTA	29 - 60
MC3410P	MOTA	29 - 43
MC3419P	MOTA	56 - 68
MC3440P	MOTA	none
Repl.by MC3440AP Cur.		
MC3441P	MOTA	none
Repl.by MC3441AP Cur.		
MC3443P	MOTA	50 - 43
MC3446P	MOTA	none
Repl.by MC3446AP Cur.		
MC3447P	♦MOTA	none
Repl.by MC3447P3 Cur.		
MC3449L	MOTA	58 - 15
MC3449P	MOTA	58 - 16
MC3461L	MOTA	53 - 53
MC3466L	MOTA	19 - 6
MC3466P	MOTA	19 - 7
MC3510P	MOTA	29 - 44
MC3519L	MOTA	56 - 69
MC3519P	MOTA	56 - 70
MC5404F	MOTA	12 - 55
MC5404L	MOTA	12 - 56
MC5405F	MOTA	12 - 57
MC5405L	MOTA	12 - 58
MC5406L	MOTA	12 - 59
MC5407L	MOTA	14 - 79
MC5416L	MOTA	12 - 60
MC5417L	MOTA	14 - 80
MC5522L	MOTA	52 - 66
MC5523L	MOTA	52 - 24
MC5524L	MOTA	52 - 67
MC5525L	MOTA	52 - 25
MC5528L	MOTA	52 - 68
MC5529L	MOTA	52 - 26
MC5534L	MOTA	52 - 69
MC5535L	MOTA	52 - 27
MC5538L	MOTA	52 - 70
MC5539L	MOTA	52 - 28
MC6527P	MOTA	59 - 52
MC6529P	MOTA	59 - 53
MC6852BJCS	MOTA	61 - 32
MC6852CJCS	MOTA	61 - 33
MC6859	MOTA	59 - 63
MC6889L	none	50 - 44
MC6889P	none	50 - 45
MC6890	MOTA	28 - 70
MC6890P	MOTA	28 - 79
MC7266L	MOTA	44 - 80
MC7266P	MOTA	44 - 81
MC7267L	MOTA	44 - 82
MC7267P	MOTA	44 - 83
MC7404F	MOTA	12 - 61
MC7404L	MOTA	12 - 62
MC7404P	MOTA	12 - 63
MC7405F	MOTA	12 - 64
MC7405L	MOTA	12 - 65
MC7405P	MOTA	12 - 66
MC7406L	MOTA	12 - 67
MC7406P	MOTA	12 - 68
MC7407L	MOTA	14 - 81
MC7407P	MOTA	14 - 82
MC7416L	MOTA	12 - 69
MC7416P	MOTA	12 - 70
MC7417L	MOTA	14 - 83
MC7417P	MOTA	14 - 84
MC7522L	MOTA	52 -109
MC7522P	MOTA	52 -110
MC7523L	MOTA	52 - 29
MC7523P	MOTA	52 - 30
MC7524L	MOTA	53 - 1
MC7524P	MOTA	53 - 2
MC7525L	MOTA	52 - 31
MC7525P	MOTA	52 - 32
MC7528L	MOTA	53 - 3
MC7528P	MOTA	53 - 4
MC7529L	MOTA	52 - 33
MC7529P	MOTA	52 - 34
MC7534L	MOTA	53 - 5
MC7534P	MOTA	53 - 6
MC7535L	MOTA	52 - 35
MC7535P	MOTA	52 - 36
MC7538L	MOTA	53 - 7
MC7538P	MOTA	53 - 8
MC7539L	MOTA	52 - 37
MC7539P	MOTA	52 - 38
MC8266L	MOTA	44 - 84
MC8267L	MOTA	44 - 85
MC8309L	MOTA	43 - 84
MC8309P	MOTA	43 - 85
MC8312L	MOTA	42 - 75
MC8312P	MOTA	42 - 76
MC8318L	MOTA	60 - 33
MC8318P	MOTA	60 - 34
MC8322F	MOTA	44 - 86
MC8322L	MOTA	44 - 87
MC8322P	MOTA	44 - 88
MC8507L	MOTA	60 - 52
MC8507P	MOTA	60 - 53
MC9309L	MOTA	43 - 83
MC9312L	MOTA	42 - 74
MC9318L	MOTA	60 - 35
MC9322F	MOTA	44 - 89
MC9322L	MOTA	44 - 90
MC10128L#1	MOTA	16 - 65
MC10128L#2	MOTA	16 - 66
MC10532F	MOTA	42 - 22
MC10532L	MOTA	42 - 23
MC10534F	MOTA	42 - 24
MC10534L	MOTA	42 - 25
MC10559F	MOTA	42 - 37
MC10559L	MOTA	42 - 38
MC14402Z	MOTA	57 - 89
MC14403L	MOTA	57 - 14
MC14403P	MOTA	57 - 15
MC14405L	MOTA	57 - 16
MC14405P	MOTA	57 - 17
MC14406Z	MOTA	57 - 90
MC14413L	MOTA	57 - 18
MC14413P	MOTA	57 - 19
MC14414L	MOTA	57 - 20
MC14414P	MOTA	57 - 21
MC14495L	MOTA	23 - 81
MC14495P	MOTA	23 - 82
MC54150L	MOTA	43 - 39
MC54151L	MOTA	42 - 89
MC54152L	MOTA	42 - 90
MC54153L	MOTA	43 - 94
MC54155F	MOTA	47 - 29
MC54155L	MOTA	47 - 30
MC54156F	MOTA	47 - 31
MC54156L	MOTA	47 - 32
MC54157F	MOTA	44 - 91
MC54157L	MOTA	44 - 92
MC54460L	MOTA	50 - 36
MC54468F	MOTA	32 - 10
MC54468L	MOTA	32 - 11
MC55325F	MOTA	19 - 12
MC68120L	MOTA	59 - 84
MC68121L	MOTA	59 - 85
MC68230	♦MOTA	59 - 64
MC74150P	MOTA	43 - 40
MC74151P	MOTA	42 - 91
MC74152L	MOTA	42 - 92
MC74152P	MOTA	42 - 93
MC74153L	MOTA	43 - 95
MC74153P	MOTA	43 - 96
MC74155F	MOTA	47 - 33
MC74155L	MOTA	47 - 34
MC74155P	MOTA	47 - 35
MC74156F	MOTA	47 - 36
MC74156L	MOTA	47 - 37
MC74156P	MOTA	47 - 38
MC74157F	MOTA	44 - 93
MC74157L	MOTA	44 - 94
MC74157P	MOTA	44 - 95
MC74460P	MOTA	50 - 37
MC74468F	MOTA	32 - 12
MC74468L	MOTA	32 - 13
MC74468P	MOTA	32 - 14
MC75109L	♦MOTA	16 - 73
MC75109P	♦MOTA	16 - 74
MC75110L	♦MOTA	16 - 75
MC75113L	♦MOTA	16 - 59
MC75140P1	MOTA	49 - 15
MC75325F	MOTA	19 - 13
MC75325P	MOTA	19 - 14
MC75358L	MOTA	32 - 5
MC75358P	MOTA	32 - 6
MC75365L	MOTA	19 - 10
MC75365P	MOTA	19 - 11
MC75368L	MOTA	32 - 7
MC75368P	MOTA	32 - 8
MC75491L	MOTA	24 - 39
MC75492L	MOTA	24 - 40
MC83150P	MOTA	43 - 41
MC83151P	MOTA	42 - 94
MC93150L	MOTA	43 - 42
MC93151L	MOTA	42 - 95
MC142100AL	MOTA	33 - 53
MC142100CL	MOTA	33 - 54
MC142100CP	MOTA	33 - 55
MC145100AL	MOTA	33 - 56
MC145100CL	MOTA	33 - 57
MC145100CP	MOTA	33 - 58
MCC102-1	CHE	none
Repl.by CS-102-1 Cur.		
MCC102#1	CHE	none
Repl.by CS-102#1 Cur.		
MCC102#2	CHE	none
Repl.by CS-102#2 Cur.		
MCC122	CHE	none
Repl.by CS-122 Cur.		
MCC560	CHE	none
Repl.by CS-560 Cur.		
MCC1486	MOTA	23 - 63
MCC1487	MOTA	23 - 64
MCC9016	♦CHE	55 - 99
MCC9041	♦CHE	55 - 16
MD54C245AD	♦MITC	56 - 80
MD74C245AC	MITC	56 - 81
MD74C245AE	MITC	56 - 82
MD74SC137AE	MITC	46 - 19
MD74SC138AE	MITC	46 - 20
MD74SC139AE	MITC	46 - 36
MD74SC237AE	MITC	46 - 38
MD74SC238AE	MITC	46 - 21
MD74SC239AE	MITC	46 - 37
MD4055BC	♦MITC	23 -106
MD4055BE	♦MITC	23 -107
MD4055BF	♦MITC	23 -108
MD4056BC	♦MITC	23 -109
MD4056BE	♦MITC	23 -110
MD4056BF	♦MITC	24 - 1
MD4104BC	♦MITC	31 - 63
		56 - 83
MD4104BD	♦MITC	56 - 84
MD4311BC	♦MITC	23 - 22
MD4311BE	♦MITC	23 - 23
MD4311BF	MITC	23 - 24
MD4311BH	MITC	23 - 25
MD4311BI	MITC	23 - 26
MD4330BD	MITC	23 - 88
MD4330BM	MITC	23 - 89
MD4330BS	MITC	23 - 90
MD4331BD	MITC	23 - 91
MD4331BE	MITC	23 - 92
MD4331BM	MITC	23 - 93
MD4331BS	MITC	23 - 94
MD4332BD	MITC	23 - 95
MD4332BM	MITC	23 - 96
MD4332BS	MITC	23 - 97
MD4368BC	MITC	23 - 27
MD4368BE	MITC	23 - 28
MD4368BER	MITC	23 - 29
MD4511BC	♦MITC	23 - 76
MD4511BE	♦MITC	23 - 77
MD4511BH	MITC	23 - 78
MD4511BI	MITC	23 - 79
MDAS-PG8D	DTL	60 - 46
MDAS-PG16D	DTL	60 - 47
MEM780D	GIC	34 -103
MEM780F	GIC	34 -104
MEM780P	GIC	34 -105
MEM781D	GIC	34 - 96
MEM781F	GIC	34 - 97
MEM781P	GIC	34 - 98
MEM851D	♦GIC	35 - 48
MEM851F	♦GIC	35 - 49
MEM851P	♦GIC	35 - 50
MEM853D	♦GIC	35 - 71
MEM853F	♦GIC	35 - 81
MEM853P	♦GIC	35 - 82
MEM855D	♦GIC	35 - 92
MEM855F	♦GIC	35 - 93
MEM855P	♦GIC	35 - 94
MEM856D	♦GIC	35 - 95
MEM856F	♦GIC	35 - 96
MEM856P	♦GIC	35 - 97
MEM857D	GIC	35 - 75
MEM857F	GIC	35 - 76
MEM857P	GIC	35 - 77
MEM4900D	GIC	26 - 11
MEM4900F	GIC	26 - 12
MEM4900P	GIC	26 - 13
MEM4956	GIC	28 - 1
MIC932-1D	ITTG	11 - 70
MIC932-5D	ITTG	11 - 71
MIC936-1D	♦ITTG	11 - 58
MIC936-5D	♦ITTG	11 - 67
MIC937-1D	♦ITTG	11 - 59
MIC937-5D	♦ITTG	11 - 68
MIC5404J	ITTG	12 - 71
MIC5405AJ	ITTG	12 - 72
MIC5405J	ITTG	12 - 73
MIC5406J	ITTG	12 - 74
MIC5407J	ITTG	14 - 85
MIC5413J	ITTG	55 - 55
MIC5416J	ITTG	12 - 75
MIC5417J	ITTG	14 - 86
MIC5426J	ITTG	14 - 12
MIC5428J	ITTG	15 - 27
MIC5433AJ	ITTG	15 - 28
MIC5433J	ITTG	15 - 29
MIC5437J	ITTG	14 - 13
MIC5438AJ	ITTG	14 - 14
MIC5438J	ITTG	14 - 15
MIC5440J	ITTG	13 - 87
MIC5441AJ	ITTG	25 - 17
MIC5445J	ITTG	25 - 61
MIC5446AJ	ITTG	25 - 37
MIC5446J	ITTG	25 - 38
MIC5447AJ	ITTG	25 - 39
MIC5447J	ITTG	25 - 40
MIC5448J	ITTG	25 - 41
MIC7404J	ITTG	12 - 76
MIC7404N	ITTG	12 - 77
MIC7405AJ	ITTG	12 - 78
MIC7405AN	ITTG	12 - 79
MIC7405J	ITTG	12 - 80
MIC7405N	ITTG	12 - 81
MIC7406J	♦ITTG	12 - 82
MIC7406N	♦ITTG	12 - 83
MIC7407J	♦ITTG	14 - 87
MIC7407N	♦ITTG	14 - 88
MIC7413J	♦ITTG	55 - 56
MIC7413N	♦ITTG	55 - 57
MIC7416J	♦ITTG	12 - 84
MIC7416N	♦ITTG	12 - 85
MIC7417J	♦ITTG	14 - 89
MIC7417N	ITTG	14 - 90
MIC7426J	ITTG	14 - 16
MIC7426N	ITTG	14 - 17
MIC7428J	ITTG	15 - 30
MIC7428N	ITTG	15 - 31
MIC7433AJ	♦ITTG	15 - 32
MIC7433AN	♦ITTG	15 - 33
MIC7433J	♦ITTG	15 - 34
MIC7433N	♦ITTG	15 - 35
MIC7437J	♦ITTG	14 - 18
MIC7437N	♦ITTG	14 - 19
MIC7438AJ	♦ITTG	14 - 20
MIC7438AN	♦ITTG	14 - 21
MIC7438J	♦ITTG	14 - 22
MIC7438N	♦ITTG	14 - 23
MIC7440J	ITTG	13 - 88
MIC7440N	ITTG	13 - 89
MIC7441AJ	♦ITTG	25 - 18
MIC7441AN	♦ITTG	25 - 19
MIC7445J	♦ITTG	25 - 62
MIC7445N	♦ITTG	25 - 63
MIC7446AJ	♦ITTG	25 - 42
MIC7446AN	♦ITTG	25 - 43
MIC7446J	♦ITTG	25 - 44
MIC7446N	♦ITTG	25 - 45
MIC7447AJ	♦ITTG	25 - 46
MIC7447AN	♦ITTG	25 - 47
MIC7447J	♦ITTG	25 - 48
MIC7447N	♦ITTG	25 - 49
MIC7448J	♦ITTG	25 - 50
MIC7448N	♦ITTG	25 - 51
MIC54135J	ITTG	55 - 61
MIC54137J	ITTG	55 - 66
MIC54141J	ITTG	25 - 20
MIC54145J	ITTG	25 - 64
MIC54150J	ITTG	43 - 43
MIC54151J	ITTG	42 - 96
MIC54153J	ITTG	43 - 97
MIC54154J	ITTG	46 - 83
MIC54155J	ITTG	47 - 39
MIC54156J	ITTG	47 - 40
MIC54157J	ITTG	44 - 96
MIC74135J	♦ITTG	55 - 62
MIC74135N	♦ITTG	55 - 63
MIC74137J	♦ITTG	55 - 67
MIC74137N	♦ITTG	55 - 68
MIC74141J	ITTG	25 - 21
MIC74141N	ITTG	25 - 22
MIC74145J	♦ITTG	25 - 65
MIC74145N	♦ITTG	25 - 66
MIC74150J	♦ITTG	43 - 44
MIC74151J	♦ITTG	42 - 97
MIC74151N	♦ITTG	42 - 98
MIC74153J	♦ITTG	43 - 98
MIC74153N	♦ITTG	43 - 99
MIC74154J	♦ITTG	46 - 84
MIC74155J	♦ITTG	46 - 85
MIC74155N	♦ITTG	47 - 41
MIC74156J	♦ITTG	47 - 42
MIC74156N	♦ITTG	47 - 43
MIC74157J	♦ITTG	44 - 97
MIC74157N	♦ITTG	44 - 98
MK5002N#	♦MOS	24 - 47
MK5002P	♦MOS	24 - 51
MK5005N#	MOS	24 - 48
MK5005P	♦MOS	24 - 50
MK5007N#	♦MOS	24 - 46
MK5007P	♦MOS	24 - 49
MK5016N-1	MOS	27 - 41
MK5087J	♦MOS	57 - 22
MK5087P	♦MOS	57 - 23
MK5089J	♦MOS	57 - 24
MK5089N-1	MOS	57 - 25
MK5089P	♦MOS	57 - 26
MK5091N	♦MOS	57 - 27
MK5092N	♦MOS	57 - 28
MK5094N	♦MOS	57 - 29
MK5098N	MOS	57 - 30
MK5099N	MOS	57 - 31
MK5116P	♦MOS	57 - 91
MK5150N	♦MOS	57 - 92
MK5150P	♦MOS	57 - 93
MK5151N	MOS	57 - 32
MK5151P	♦MOS	57 - 94
MK5155J	MOS	57 - 95
MK5155N	♦MOS	57 - 96
MK5155P	MOS	57 - 97
MK5156N	MOS	57 - 33
MK5156P	♦MOS	57 - 34
MK5160N	♦MOS	27 - 29
		41 - 33
MK5160P	♦MOS	27 - 30
MK5161N	MOS	27 - 31
MK5161P	MOS	27 - 32
MK5168N-1	♦MOS	27 - 38
MK5170N	♦MOS	59 - 36
MK5201	MOS	59 - 54
MK5380J	♦MOS	57 - 35
MK5380P	♦MOS	57 - 36
MK5389J	MOS	57 - 37
MK5389P	MOS	57 - 38
MK5912-3P	♦MOS	56 - 29
MK50395N	♦MOS	24 - 54
MK50396N	♦MOS	24 - 55
MK50397N	♦MOS	24 - 56
MK50398N	♦MOS	24 - 52
MK50399N	♦MOS	24 - 53
MK50808N	♦MOS	27 - 42
MK50808N-1	♦MOS	27 - 43
MK50816N-1#1	♦MOS	27 - 14
MK50816N-1#2	♦MOS	41 - 34
MK50816N#1	♦MOS	27 - 44
MK50816N#2	♦MOS	41 - 35
MK50816P-1#1	♦MOS	27 - 39
MK50816P-1#2	♦MOS	41 - 36
MK50816P#1	♦MOS	27 - 45
MK50816P#2	♦MOS	41 - 37
ML8204	MITC	56 - 30
ML8205	MITC	56 - 31
MN120	♦MNC	60 - 24
MN121	♦MNC	60 - 25
MN121-10	MNC	60 - 26
MN121-11	MNC	60 - 27
MN160	♦MNC	60 - 28
MN160-10	♦MNC	60 - 29
MN160-11	MNC	60 - 30
MN5500	MNC	27 - 89
MN7000	♦MNC	60 - 48
MN7000H	♦MNC	60 - 49
MN7002	♦MNC	60 - 50
MN7002H	♦MNC	60 - 51
MN7200	♦MNC	27 - 98
MP200CD	♦ANS	54 - 1
MS504#1	♦RTC	41 - 16
MS504#2	♦RTC	41 - 17
MS504#3	♦RTC	41 - 18
MS504#4	♦RTC	41 - 19

INTERFACE

♦-Mfr's data sheet available in microfilm service

Cur-In current D.A.T.A.BOOK
Δ-Registered with JEDEC by this manufacturer

Obs-In this book

1. TYPE No. CROSS INDEX

IN TYPE NUMBER SEQUENCE

TYPE No.	MFRS	Pg&Line
MT4320AD	MITC	57 - 39
MT4320AE	MITC	57 - 40
MT4322AE	MITC	57 - 41
MT4323AE	MITC	57 - 42
MT4325AD	MITC	57 - 43
MT4325AE	MITC	57 - 44
MT4326AD	MITC	57 - 45
MT4326AE	MITC	57 - 46
MT8804AD	♦MITC	33 - 59
MT8804AI	♦MITC	33 - 60
MT8804BC	MITC	33 - 61
MT8804BE	MITC	33 - 62
MT8804BF	MITC	33 - 63
MT8804BH	MITC	33 - 64
MT8804BI	MITC	33 - 65
MT8820AC	♦MITC	57 - 47
MT8820AD	♦MITC	57 - 48
MT8820AE	♦MITC	57 - 49
MT8820AJ	♦MITC	57 - 50
MT8820AN	♦MITC	57 - 51
MT8860AD	MITC	59 - 37
MT8860AY	MITC	59 - 38
MT8865AC	♦MITC	57 - 52
MT8865AD	MITC	59 - 39
MT8865AE	♦MITC	57 - 53
MT8865AY	MITC	59 - 40
MU105CP	ANS	56 - 71
MU6108C	♦DTL	41 - 29
MU6108M	♦DTL	41 - 30
MU6116C	♦DTL	41 - 43
MU6116M	♦DTL	41 - 44
MU6208C	♦DTL	41 - 11
MU6208M	♦DTL	41 - 12
MU6216C	♦DTL	41 - 31
MU6216M	♦DTL	41 - 32
MUX86ET	♦PMI	41 - 7
MUX86FT	♦PMI	41 - 8
MUX88AQ	PMI	41 - 5
MUX88BQ	PMI	41 - 6
MUX202-M/B	♦HBC	41 - 26
MUX202-M/C	♦HBC	41 - 27
MUX203	♦HBC	41 - 28
MUX204	♦HBC	41 - 42
MUX1600	GIC	41 - 66
MX01C	♦AMI	34 - 58
MX02D	♦AMI	34 - 65
MX03C	♦AMI	34 - 67
MX52D	AMI	34 - 66
MX53C	AMI	34 - 68
MX54C	♦AMI	34 - 59
MX55C	AMI	34 - 60
N8T04B	MULB	25 - 83
PHIN	SIC	
N8T04W	MULB	25 - 84
PHIN	SIC	
N8T05B	MULB	25 - 85
PHIN	SIC	
N8T05W	MULB	25 - 86
PHIN	SIC	
N8T06B	MULB	25 - 87
PHIN	SIC	
N8T06W	MULB	25 - 88
PHIN	SIC	
N8T09A	MULB	17 - 71
PHIN	SIC	
N8T13B	MULB	17 - 43
PHIN	SIC	
N8T14B	MULB	49 - 37
PHIN	SIC	
N8T16A	MULB	49 - 17
PHIN	♦SIC	
N8T18A	MULB	32 - 3
PHIN	SIC	
N8T18W	MULB	32 - 4
PHIN	SIC	
N8T23B	MULB	17 - 44
PHIN	SIC	
N8T24B	MULB	49 - 29
PHIN	SIC	
N8T26AB	MULB	50 - 46
PHIN	SIC	
N8T28B	MULB	50 - 47
PHIN	SIC	
N8T30A	MULB	50 - 29
PHIN	SIC	
N8T34A	MULB	50 - 56
PHIN	SIC	
N8T37A	MULB	49 - 54
PHIN	SIC	
N8T38A	MULB	50 - 57
PHIN	SIC	
N8T80A	MULB	31 -110
PHIN	SIC	
N8T80W	MULB	32 - 1
PHIN	SIC	
N8T90A	MULB	32 - 2
PHIN	SIC	
N8T90W	MULB	31 -109
PHIN	SIC	
N8T93A	MULB	13 - 30
PHIN	SIC	
N8T94A	MULB	13 - 31
PHIN	SIC	
N8T95B	MULB	14 -106
PHIN	SIC	
N8T96B	MULB	13 - 32
PHIN	SIC	
N8T97B	MULB	14 -107
PHIN	SIC	
N8T98B	MULB	13 - 33
PHIN	SIC	
N8T363N	RTCF	61 - 34
N8T380A	MULB	49 - 50
PHIN	SIC	

TYPE No.	MFRS	Pg&Line
N74LS42F	none	46 - 62
N74LS42N	none	46 - 63
N74LS145B	PHIN	25 - 67
	SIC	
N74LS151B	PHIN	42 - 57
	SIC	
N74LS251B	PHIN	42 - 58
	SIC	
N74LS258B	PHIN	44 - 49
	SIC	
N74S258B	PHIN	45 - 18
	SIC	
N82S32F	PHIN	42 - 99
	SIC	
N8230W	PHIN	42 -100
	SIC	
N8231W	PHIN	42 -101
	SIC	
N8232W	PHIN	42 -102
	SIC	
N8233W	PHIN	44 - 99
	SIC	
N8234W	PHIN	44 -100
	SIC	
N8235W	PHIN	44 -101
	SIC	
N8263Q	PHIN	45 - 36
	SIC	
N8264Q	PHIN	45 - 37
	SIC	
N9309B	PHIN	43 -100
	SIC	
N9312B	PHIN	42 -103
	SIC	
N9312F	PHIN	42 -104
	SIC	
N74159F	SIC	46 - 86
N74159N	SIC	46 - 87
N74232A	PHIN	55 - 64
	SIC	
NADC-1	DDC	27 - 8
NADC-3	DDC	27 - 9
NC320	♦NIT	57 - 54
NC321	♦NIT	57 - 55
NC322	♦NIT	57 - 56
NC331	NIT	27 - 13
NC332	NIT	28 - 54
NC2030	♦NIT	59 - 41
NC2320R	♦NIT	57 - 57
NC2320V	♦NIT	57 - 58
NC2321R	♦NIT	57 - 59
NC2321V	♦NIT	57 - 60
NC2322R	♦NIT	57 - 61
NC2322V	♦NIT	57 - 62
NC2331	NIT	57 - 98
NC2332	NIT	57 - 99
NE580F	PHIN	23 - 4
	♦SIC	61 - 11
NE580N	PHIN	23 - 5
	♦SIC	61 - 12
NE582B	MULB	11 - 82
PHIN	SIC	
NE584-8F	PHIN	25 -108
	♦SIC	
NE584-9F	PHIN	25 -109
	♦SIC	
NE585-6F	PHIN	25 -107
	♦SIC	
NE585-9F	PHIN	25 -110
	♦SIC	
NE586FØ	♦SIC	25 -104
NE586NØ	♦SIC	25 -105
NE5007F	MULB	none
PHIN	RTCF	
♦SIC	VALG	
Repl.by DAC08CF Cur.		
NE5007N	MULB	none
PHIN	RTCF	
♦SIC	VALG	
Repl.by DAC08CN Cur.		
R6520	RKW	59 - 77
R6520AE	RKW	59 - 78
R6520AM	RKW	59 - 79
R6520AMT	RKW	59 - 80
R6520E	RKW	59 - 81
R6520M	RKW	59 - 82
R6520MT	RKW	59 - 83
R6522	♦RKW	58 - 13
R6522CMT	♦RKW	58 - 14
R6545AC	♦RKW	56 - 58
R6545AP	♦RKW	56 - 59
R6545C	♦RKW	56 - 60
R6545P	♦RKW	56 - 61
RC8T13DD	♦RTN	17 - 40
RC8T14DD	♦RTN	49 - 33
RC8T23DD	♦RTN	17 - 45
RC8T24DD	♦RTN	49 - 34
RC1488DB	♦RTN	17 - 77
RC1488DC	♦RTN	17 - 78
RC1489ADB	♦RTN	49 - 45
RC1489ADC	♦RTN	49 - 46
RC1489DB	♦RTN	49 - 39
RC1489DC	♦RTN	49 - 40
RC9622DC	RTN	48 - 7
RC75325DD	RTN	20 - 44
RM8T13DD	♦RTN	17 - 41
RM8T14DD	♦RTN	49 - 35
RM8T23DD	RTN	17 - 46
RM8T24DD	RTN	49 - 36
RM9622CJ	♦RTN	48 - 8
RM9622DC	♦RTN	48 - 9
RM55325DD	♦RTN	20 - 45
RPT81Q	PMI	none
Repl.by RPT81FQ Cur.		

TYPE No.	MFRS	Pg&Line
S54LS42F	none	46 - 60
S54LS42W	none	46 - 61
S55V01	SIX	21 - 38
S55V02	SIX	21 - 39
S55V11	SIX	21 - 36
S55V12	SIX	21 - 40
S55V21	SIX	21 - 37
S55V22	SIX	21 - 41
S82S30B	PHIN	42 -105
	SIC	
S82S31B	PHIN	42 -106
	SIC	
S82S32B	PHIN	42 -107
	SIC	
S82S32F	PHIN	42 -108
	SIC	
S82S33B	PHIN	44 -102
	SIC	
S82S33F	PHIN	44 -103
	SIC	
S82S34B	PHIN	44 -104
	SIC	
S82S34F	PHIN	44 -105
	SIC	
S120A3	♦SIEG	57 - 63
S121B	SIEG	57 - 64
S0258A	SIEG	55 - 1
S291	SIEG	56 - 66
S291A	SIEG	56 - 67
S359	SIEG	57 - 65
S600E5	SIEG	60 - 20
S600E5P	SIEG	60 - 21
S1907A	AMI	59 - 35
S2560B	AMI	57 - 66
S2561CE	AMI	57 - 67
S2561E	AMI	57 - 68
S2562C	AMI	57 - 69
S2562D	AMI	57 - 70
S2562P	♦AMI	57 - 71
S2811	♦AMI	56 - 40
S2811C	♦AMI	56 - 47
S2811D	♦AMI	56 - 48
S2811P	♦AMI	56 - 49
S2814A	AMI	59 - 48
S2814AC	♦AMI	56 - 41
S2814AD	♦AMI	56 - 42
S2814AP	♦AMI	56 - 43
S2815C	♦AMI	56 - 44
S2815D	♦AMI	56 - 45
S2815P	♦AMI	56 - 46
S2816	AMI	57 - 72
S2859E	♦AMI	57 - 73
S3501E	♦AMI	57 - 74
S3502E	♦AMI	57 - 75
S3503C	♦AMI	59 - 42
S3503D	♦AMI	59 - 43
S3503P	♦AMI	59 - 44
S3504C	♦AMI	59 - 45
S3504D	♦AMI	59 - 46
S3504P	♦AMI	59 - 47
S3505	AMI	57 -100
S3505A	AMI	57 -101
S3505AC	AMI	57 -102
S3505AD	AMI	57 -103
S3505AP	AMI	57 -104
S3505C	AMI	57 -105
S3505D	AMI	57 -106
S3505P	AMI	57 -107
S3526BC	♦AMI	57 - 87
S3526BP	♦AMI	57 - 88
S8230B	PHIN	42 -109
	SIC	
S8231B	PHIN	42 -110
	SIC	
S8232B	PHIN	43 - 1
	SIC	
S8233B	PHIN	44 -106
	SIC	
S8234B	PHIN	44 -107
	SIC	
S8235B	PHIN	44 -108
	SIC	
S9260P	AMI	59 -106
S9261P	AMI	59 -107
S9262P	AMI	59 -108
S9263P	AMI	59 -109
S9264P	AMI	59 -110
S9265P	AMI	60 - 1
S9266P	AMI	60 - 2
S9312F	PHIN	43 - 2
	SIC	
S9312W	PHIN	43 - 3
	♦SIC	
S25089	♦AMI	57 - 76
S54154I	MULB	46 - 88
S54154Q	PHIN	46 - 89
	SIC	
S54159F	SIC	46 - 90
S54159W	SIC	46 - 91
S54232F	PHIN	55 - 65
	SIC	
S54365AR	MULB	14 - 91
S54366AR	MULB	12 - 86
S54367AR	MULB	14 - 92
S54368AR	MULB	12 - 87
SAA5020	none	59 - 95
SAB3211Z	SIEG	23 - 35
		46 - 57
SBA5091	♦ITTG	57 - 77
SBA26154	DDC	56 - 37
SBA26155	DDC	56 - 38
SCL4007UBF	SSS	11 - 3
SCL4009AC	SSS	31 - 39
SCL4009AD	♦SSS	31 - 40

TYPE No.	MFRS	Pg&Line
SCL4009AE	♦SSS	31 - 41
SCL4009AF	♦SSS	31 - 42
SCL4009AH	♦SSS	31 - 43
SCL4009UBF	SSS	11 - 14
SCL4010AC	SSS	31 - 44
SCL4010AD	♦SSS	31 - 45
SCL4010AE	♦SSS	31 - 46
SCL4010AF	♦SSS	31 - 47
SCL4010AH	♦SSS	31 - 48
SCL4010BF	SSS	11 - 15
SCL4016ABC	♦SSS	none
Repl.by SCL4016BC Cur.		
SCL4016ABD	♦SSS	none
Repl.by SCL4016BD Cur.		
SCL4016ABE	♦SSS	none
Repl.by SCL4016BE Cur.		
SCL4016ABF	♦SSS	none
Repl.by SCL4016BF Obs.		
SCL4016ABH	♦SSS	none
Repl.by SCL4016BH Cur.		
SCL4016BF	SSS	33 - 35
SCL4026ABF	SSS	24 - 2
SCL4033ABF	SSS	24 - 3
SCL4041UBF	SSS	11 - 5
SCL4049AC	SSS	31 - 49
SCL4049AD	♦SSS	31 - 50
SCL4049AE	♦SSS	31 - 51
SCL4049AF	♦SSS	31 - 52
SCL4049AH	♦SSS	31 - 53
SCL4049UBF	SSS	11 - 16
SCL4050AC	SSS	31 - 54
SCL4050AD	♦SSS	31 - 55
SCL4050AE	♦SSS	31 - 56
SCL4050AF	♦SSS	31 - 57
SCL4050AH	♦SSS	31 - 58
SCL4050BF	SSS	11 - 36
SCL4051BF	SSS	41 - 65
SCL4052BF	SSS	41 - 64
SCL4053BF	SSS	41 - 63
SCL4066BF	SSS	33 - 36
SCL4069UBF	SSS	11 - 17
SCL4093BF	SSS	55 - 5
SCL4416ABC	♦SSS	none
Repl.by SCL4416BC Cur.		
SCL4416ABD	♦SSS	none
Repl.by SCL4416BD Cur.		
SCL4416ABE	♦SSS	none
Repl.by SCL4416BE Cur.		
SCL4416ABF	♦SSS	none
Repl.by SCL4416BF Obs.		
SCL4416ABH	♦SSS	none
Repl.by SCL4416BH Cur.		
SCL4416BF	SSS	33 - 46
SCL4426ABC	SSS	23 - 83
SCL4426ABF	SSS	23 - 84
SCL4433ABC	SSS	23 - 85
SCL4433ABF	SSS	23 - 86
SCL4441UBF	SSS	11 - 6
SCL4449UBF	SSS	11 - 18
SCL4502BF	SSS	11 - 19
SCL4511BF	SSS	23 - 73
SCL4512BF	SSS	42 - 4
SCL4543BF	SSS	23 - 74
SCL4584BF	SSS	55 - 15
SCL5284	♦SSS	56 - 75
SCL5285	♦SSS	46 - 2
SCL5337	SSS	23 - 48
SCL25411	♦SSS	46 - 1
SD5101N	♦SIC	34 - 80
SDA2004	♦SIEG	23 - 12
SDA5680A	♦SIEG	23 - 1
SDA5680B	♦SIEG	23 - 2
SE5008F	MULB	none
PHIN	RTCF	
SIC	VALG	
Repl.by DAC08F Cur.		
SFC404E	♦THEF	12 - 88
SFC404EM	♦THEF	12 - 89
SFC404ET	♦THEF	12 - 90
SFC404HE	THEF	12 - 91
SFC404HEM	THEF	12 - 92
SFC404HJM	THEF	12 - 93
SFC404HKM	THEF	12 - 94
SFC404HPM	THEF	12 - 95
SFC404JM	THEF	12 - 96
SFC404KM	♦THEF	12 - 97
SFC404LSE	♦THEF	13 - 34
SFC404LSEM	♦THEF	12 - 98
SFC404PM	♦THEF	12 - 99
SFC404SE	THEF	13 - 35
SFC404SJM	THEF	13 - 36
SFC404SKM	THEF	13 - 37
SFC405E	♦THEF	12 -100
SFC405EM	♦THEF	12 -101
SFC405ET	♦THEF	12 -102
SFC405JM	THEF	12 -103
SFC405KM	♦THEF	12 -104
SFC405LSE	♦THEF	13 - 38
SFC405LSEM	♦THEF	12 -105
SFC405PM	♦THEF	12 -106
SFC405SE	♦THEF	13 - 39
SFC405SJM	THEF	13 - 40
SFC405SKM	♦THEF	13 - 41
SFC406E	♦THEF	13 - 63
SFC406EM	♦THEF	13 - 64
SFC406ET	♦THEF	13 - 65
SFC406JM	THEF	13 - 66
SFC406KM	♦THEF	13 - 67
SFC406PM	♦THEF	13 - 68
SFC407E	♦THEF	15 - 10
SFC407EM	♦THEF	15 - 11
SFC407ET	♦THEF	15 - 12
SFC407JM	THEF	15 - 13
SFC407KM	♦THEF	15 - 14

TYPE No.	MFRS	Pg&Line
SFC407PM	♦THEF	15 - 15
SFC416E	♦THEF	13 - 69
SFC416EM	♦THEF	13 - 70
SFC416ET	♦THEF	13 - 71
SFC416JM	THEF	13 - 72
SFC416KM	♦THEF	13 - 73
SFC416PM	♦THEF	13 - 74
SFC417E	♦THEF	15 - 16
SFC417EM	♦THEF	15 - 17
SFC417ET	♦THEF	15 - 18
SFC417JM	THEF	15 - 48
SFC417KM	♦THEF	15 - 19
SFC417PM	♦THEF	15 - 20
SFC432E	♦THEF	15 - 42
SFC432EM	♦THEF	15 - 43
SFC432ET	♦THEF	15 - 44
SFC432JM	THEF	15 - 45
SFC432KM	♦THEF	15 - 46
SFC432PM	♦THEF	15 - 47
SFC437E	♦THEF	14 - 24
SFC437EM	♦THEF	14 - 25
SFC437ET	♦THEF	14 - 26
SFC437JM	THEF	14 - 27
SFC437KM	♦THEF	14 - 28
SFC437LSE	♦THEF	14 - 42
SFC437LSEM	♦THEF	14 - 29
SFC437PM	♦THEF	14 - 30
SFC438E	♦THEF	14 - 31
SFC438EM	♦THEF	14 - 32
SFC438ET	♦THEF	14 - 33
SFC438JM	THEF	14 - 34
SFC438KM	♦THEF	14 - 35
SFC438LSE	♦THEF	14 - 43
SFC438LSEM	♦THEF	14 - 36
SFC438PM	♦THEF	14 - 37
SFC440E	♦THEF	13 - 90
SFC440EM	♦THEF	13 - 91
SFC440ET	♦THEF	13 - 92
SFC440HE	THEF	13 - 93
SFC440HEM	THEF	13 - 94
SFC440HJM	THEF	13 - 95
SFC440HKM	THEF	13 - 96
SFC440HPM	THEF	13 - 97
SFC440JM	THEF	13 - 98
SFC440KM	♦THEF	13 - 99
SFC440LSE	THEF	13 -107
SFC440LSEM	THEF	13 -100
SFC440PM	♦THEF	13 -101
SFC445E	♦THEF	25 - 23
SFC445ET	♦THEF	25 - 24
SFC601E	THEF	13 - 77
SFC4132E	♦THEF	55 - 18
SFC4132EM	♦THEF	55 - 19
SFC4132ET	♦THEF	55 - 20
SFC4132JM	♦THEF	55 - 21
SFC4132KM	♦THEF	55 - 22
SFC4132PM	♦THEF	55 - 23
SFC4138LSE	♦THEF	46 - 77
SFC4138LSEM	♦THEF	46 - 72
SFC4139LSE	♦THEF	47 - 19
SFC4139LSEM	♦THEF	47 - 5
SFC4141E	THEF	25 - 25
SFC4145E	♦THEF	25 - 26
SFC4145ET	♦THEF	25 - 27
SFC4148E	♦THEF	60 - 36
SFC4148EM	♦THEF	60 - 37
SFC4148ET	♦THEF	60 - 38
SFC4148JM	THEF	60 - 39
SFC4148KM	♦THEF	60 - 40
SFC4150E	♦THEF	43 - 45
SFC4150EM	♦THEF	43 - 46
SFC4150ET	♦THEF	43 - 47
SFC4150JM	THEF	43 - 48
SFC4150KM	♦THEF	43 - 49
SFC4151E	♦THEF	43 - 4
SFC4151EM	♦THEF	43 - 5
SFC4151ET	♦THEF	43 - 6
SFC4151JM	THEF	43 - 7
SFC4151KM	♦THEF	43 - 8
SFC4151LSE	♦THEF	42 - 71
SFC4151LSEM	♦THEF	42 - 59
SFC4153E	♦THEF	43 -101
SFC4153EM	♦THEF	43 -102
SFC4153ET	♦THEF	43 -103
SFC4153JM	THEF	43 -104
SFC4153KM	♦THEF	43 -105
SFC4153LSE	♦THEF	43 - 69
SFC4153LSEM	♦THEF	43 - 70
SFC4153SE	♦THEF	44 - 3
SFC4153SJM	THEF	44 - 4
SFC4153SKM	♦THEF	44 - 5
SFC4154E	♦THEF	46 - 92
SFC4154EM	♦THEF	46 - 93
SFC4154ET	♦THEF	46 - 94
SFC4154JM	THEF	46 - 95
SFC4154KM	♦THEF	46 - 96
SFC4155E	♦THEF	47 - 44
SFC4155EM	♦THEF	47 - 45
SFC4155ET	♦THEF	47 - 46
SFC4155JM	THEF	47 - 47
SFC4155KM	♦THEF	47 - 48
SFC4155LSE	♦THEF	47 - 20
SFC4155LSEM	♦THEF	47 - 6
SFC4156E	♦THEF	47 - 49
SFC4156EM	♦THEF	47 - 50
SFC4156ET	♦THEF	47 - 51
SFC4157E	♦THEF	44 -109
SFC4157EM	♦THEF	44 -110
SFC4157ET	♦THEF	45 - 1
SFC4157JM	THEF	45 - 2
SFC4157KM	♦THEF	45 - 3
SFC4157LSE	♦THEF	44 - 65
SFC4157LSEM	♦THEF	44 - 50
SFC4157SE	♦THEF	45 - 19

♦-Mfr's data sheet available in microfilm service

Cur-In current D.A.T.A.BOOK
Δ-Registered with JEDEC by this manufacturer

Obs-In this book

1. TYPE No. CROSS INDEX

IN TYPE NUMBER SEQUENCE

TYPE No.	MFRS	Pg&Line
SFC4157SJM	THEF	45 - 20
SFC4157SKM	♦THEF	45 - 21
SFC4158SE	♦THEF	45 - 22
SFC4158SJM	THEF	45 - 23
SFC4158SKM	♦THEF	45 - 24
SFC4251LSE	THEF	42 - 72
SFC4251LSEM	THEF	42 - 60
SFC4253LSE	THEF	43 - 79
SFC4253LSEM	THEF	43 - 71
SFC5107AE	♦THEF	48 - 89
SFC5107AEM	♦THEF	48 - 90
SFC5107AJM	THEF	48 - 91
SFC5107AKM	♦THEF	48 - 92
SFC5108AE	♦THEF	48 - 93
SFC5108AEM	♦THEF	48 - 94
SFC5108AJM	THEF	48 - 95
SFC5108AKM	♦THEF	48 - 96
SFC5109E	♦THEF	16 - 76
SFC5109EM	♦THEF	16 - 77
SFC5109JM	THEF	16 - 78
SFC5109KM	♦THEF	16 - 79
SFC5110E	♦THEF	16 - 80
SFC5110EM	♦THEF	16 - 81
SFC5110JM	THEF	16 - 82
SFC5110KM	♦THEF	16 - 83
SFC5325E	♦THEF	20 - 46
SFC5325KM	♦THEF	20 - 47
SFC5325KT	♦THEF	20 - 48
SFC5450AE	♦THEF	22 - 10
SFC5451AD	♦THEF	22 - 11
SFC50026	♦THEF	19 - 96
SFF150	♦THEF	36 - 13
SFF150M	♦THEF	36 - 14
SFF151	♦THEF	35 - 51
SFF151M	♦THEF	35 - 52
SFF153E	♦THEF	35 - 98
SFF153K	♦THEF	35 - 99
SFF153KM	♦THEF	35 -100
SFF154	♦THEF	35 - 31
SFF154M	♦THEF	35 - 32
SFF155	♦THEF	35 - 33
SFF155M	♦THEF	35 - 34
SFF156E	♦THEF	35 - 64
SFF156K	♦THEF	35 - 65
SFF156KM	♦THEF	35 - 66
SFF157E	♦THEF	35 - 60
SFF157K	♦THEF	35 - 61
SFF157KM	♦THEF	35 - 62
SFF160K	♦THEF	41 - 69
SFF160KM	♦THEF	41 - 70
SFF160KT	♦THEF	41 - 71
SFF1115KM	♦THEF	35 - 39
SFF1115KT	♦THEF	35 -101
SFF1115PM	♦THEF	35 -102
SFF1115PT	♦THEF	35 -103
SFF1116KM	♦THEF	35 - 86
SFF1116KT	♦THEF	35 - 87
SFF1116PM	♦THEF	35 - 88
SFF1116PT	♦THEF	35 - 89
SFF1117KM	♦THEF	35 -104
SFF1117KT	♦THEF	35 -105
SFF1117PM	♦THEF	35 -106
SFF1117PT	♦THEF	35 -107
SFF1118KM	♦THEF	35 -108
SFF1118KT	♦THEF	35 -109
SFF1118PM	♦THEF	35 -110
SFF1118PT	♦THEF	36 - 1
SFF1119KM	♦THEF	35 - 67
SFF1119KT	♦THEF	35 - 68
SFF1119PM	♦THEF	35 - 69
SFF1119PT	♦THEF	35 - 70
SFF1122KM	♦THEF	35 - 56
SFF1122KT	♦THEF	35 - 57
SFF1122PM	♦THEF	35 - 58
SFF1122PT	♦THEF	35 - 59
SFF24016AEV	♦THEF	33 - 37
SFF24016AKM	♦THEF	33 - 38
SFF24049AEV	♦THEF	11 - 9
SFF24049AKM	♦THEF	11 - 10
SFF24050AEV	♦THEF	11 - 25
SFF24050AKM	♦THEF	11 - 26
SFF25306	THEF	23 - 70
SFF25307	THEF	23 - 71
SFF25308	THEF	23 - 72
SFF96364AE	♦THEF	59 - 86
SFF96364AK	♦THEF	59 - 87
SFF96364BE	♦THEF	59 - 88
SFF96364BK	♦THEF	59 - 89
SG293A#ai	none	21 - 10
SG1489J	♦SGL	49 - 47
SG3636#ai	none	21 - 17
SG3637#ai	none	21 - 20
SG3638#ai	none	21 - 18
SG3639#ai	none	21 - 19
SG3640#ai	none	21 - 7
SG3641#ai	none	21 - 8
SG3700#ai	none	21 - 9
SG6118	♦SGL	23 - 3
SG7520J	SGL	51 - 55
SG7520N	SGL	51 - 56
SG7521J	SGL	51 - 33
SG7521N	SGL	51 - 34
SG7522J	SGL	51 - 57
SG7522N	SGL	51 - 58
SG7523J	SGL	51 - 35
SG7523N	SGL	51 - 36
SG7524J	SGL	53 - 9
SG7524N	SGL	53 - 10
SG7525J	SGL	52 - 39
SG7525N	SGL	52 - 40
SG7528J	SGL	53 - 11
SG7528N	SGL	53 - 12
SG7529J	SGL	52 - 41
SG7529N	SGL	52 - 42
SG7534J	SGL	53 - 13
SG7534N	SGL	53 - 14
SG7535J	SGL	52 - 43
SG7535N	SGL	52 - 44
SG7538J	SGL	53 - 15
SG7538N	SGL	53 - 16
SG7539J	SGL	52 - 45
SG7539N	SGL	52 - 46
SG55138J	SGL	50 - 86
SG55154J	SGL	49 - 51
SG75138J	SGL	50 - 87
SG75154J	SGL	49 - 52
SH702M/B	♦HBC	54 - 15
SH702M/C	♦HBC	54 - 16
SH703	HBC	54 - 17
SH2001FC	♦FSC	21 - 49
SH2001HC	♦FSC	21 - 50
SH2001HM	♦FSC	21 - 51
SH2002HC	♦FSC	21 - 46
SH2002HM	♦FSC	21 - 47
SH2200HC	♦FSC	21 - 52
SH2200HM	♦FSC	21 - 53
SH2201HC	♦FSC	21 - 54
SH2201HM	♦FSC	21 - 55
SH3002HC	♦FSC	40 - 6
SH3002HM	♦FSC	40 - 7
SH3003HC	♦FSC	38 - 9
SH3003HM	♦FSC	38 - 10
SH3011	♦FSC	21 - 3
SHC23	♦BUB	54 - 6
SHC23ET	♦BUB	54 - 7
SI452AL	SIX	35 - 53
SI455AA	SIX	35 - 46
SI552BL	SIX	35 - 54
SI555BA	SIX	35 - 47
SI3002AA	SIX	36 - 4
SI3002BP	SIX	36 - 5
SI3705142P	SIX	41 - 72
SI3705143P	SIX	41 - 67
SI3705193P	SIX	41 - 68
SIL4511BC	MITC	23 - 30
SIL4511BE	MITC	23 - 31
SIL4511BF	MITC	23 - 32
SIL4511BH	MITC	23 - 33
SIL4511BI	MITC	23 - 34
SM61A1	SIEG	59 - 61
SM61A	SIEG	59 - 62
SM301	SIEG	59 - 60
SMC7404N	SELI	12 -107
SMC7405N	SELI	12 -108
SMC7406N	SELI	12 -109
SMC7407N	SELI	14 - 93
SMP10AQ	PMI	54 - 10
SMP10BQ	PMI	54 - 8
SMP10EQ	PMI	54 - 11
SMP10FQ	PMI	54 - 9
SN54ALS241J	MOTA	17 - 88
SN54ALS244J	MOTA	17 - 89
SN54LS240W	MOTA	17 -104
SN54LS241W	MOTA	17 -105
SN54LS244J	♦MMI	none
MOTA	TII	
Repl.by SN54LS244JØ Cur.		
SN54LS244W	MOTA	17 -106
SN54LS245W	MOTA	50 - 96
SN54LS365AW	♦MOTA	14 - 94
SN54LS366AW	MOTA	12 -110
SN54LS367AW	MOTA	14 - 95
SN54LS368AW	MOTA	13 - 1
SN54LS398W	♦MOTA	44 - 51
SN54LS540W	MOTA	17 -107
SN54LS541W	MOTA	17 -108
SN54LS640W	♦MOTA	50 - 88
SN54LS641W	MOTA	50 - 89
SN54LS642W	MOTA	50 - 90
SN54LS645W	MOTA	50 - 91
SN74LS04W	MOTA	13 - 2
SN74LS05W	MOTA	13 - 3
SN74LS13W	MOTA	55 - 33
SN74LS14W	MOTA	55 - 35
SN74LS28W	MOTA	15 - 41
SN74LS37W	MOTA	14 - 44
SN74LS38W	MOTA	14 - 45
SN74LS40W	MOTA	13 -108
SN74LS47W	MOTA	25 - 89
SN74LS48W	MOTA	25 - 90
SN74LS49W	MOTA	25 - 91
SN74LS125AW	MOTA	14 - 61
SN74LS126AW	MOTA	14 - 62
SN74LS132W	MOTA	55 - 34
SN74LS138W	MOTA	46 - 73
SN74LS139W	MOTA	47 - 7
SN74LS157W	MOTA	44 - 66
SN74LS158W	MOTA	44 - 67
SN74LS240W	MOTA	17 -109
SN74LS241W	MOTA	17 -110
SN74LS242W	MOTA	50 - 34
SN74LS243W	MOTA	50 - 35
SN74LS244J	♦MMI	none
MOTA	TII	
Repl.by SN74LS244JØ Cur.		
SN74LS244N	♦MMI	none
MOTA	TII	
Repl.by SN74LS244NØ Cur.		
SN74LS244W	MOTA	18 - 1
SN74LS245W	MOTA	50 - 98
SN74LS247W	MOTA	25 - 92
SN74LS248W	MOTA	25 - 93
SN74LS249W	MOTA	25 - 94
SN74LS251W	MOTA	42 - 73
SN74LS253W	♦MOTA	43 - 80
SN74LS257AW	MOTA	45 - 34
SN74LS258AW	♦MOTA	45 - 35
SN74LS298W	MOTA	44 - 68
SN74LS352W	MOTA	43 - 81
SN74LS353W	MOTA	43 - 82
SN74LS365AW	MOTA	14 -108
SN74LS366AW	MOTA	13 - 42
SN74LS367AW	MOTA	14 -109
SN74LS368AW	MOTA	13 - 43
SN74LS398W	♦MOTA	44 - 69
SN74LS399W	♦MOTA	44 - 70
SN74LS540W	MOTA	17 - 99
SN74LS541W	MOTA	17 -100
SN74LS640W	MOTA	50 - 92
SN74LS641W	MOTA	50 - 93
SN74LS642W	MOTA	50 - 94
SN74LS645W	MOTA	50 - 95
SN5526J	TII	51 - 41
SN7526J	TII	51 - 59
SN7526N	TII	51 - 60
SN55236W	TII	51 - 78
SN55244J	TII	51 - 71
SN55244JA	TII	51 - 72
SN55244N	TII	51 - 73
SN55325W	TII	20 - 49
SN55326W	TII	20 - 26
SN55327W	TII	20 - 27
SN75236W	TII	51 - 77
SN75244J	TII	51 - 74
SN75244JA	TII	51 - 75
SN75244N	TII	51 - 76
SN75401ND	♦TII	22 - 77
SND5025	♦SSS	59 - 66
SND5035	SSS	59 - 67
SP701AT	♦PLSB	26 - 17
SP701BT	♦PLSB	26 - 16
SP703AE	♦PLSB	26 - 18
SP703AF	♦PLSB	26 - 19
SP703BE	♦PLSB	26 - 20
SP703BF	♦PLSB	26 - 21
SP704AE	♦PLSB	26 - 22
SP704AF	♦PLSB	26 - 23
SP704BE	♦PLSB	26 - 24
SP704BF	♦PLSB	26 - 25
SP721BE	♦PLSB	16 - 70
SP721BF	♦PLSB	16 - 71
SP721BT	♦PLSB	16 - 72
SP722BE	♦PLSB	48 - 32
SP722BF	♦PLSB	48 - 33
SP722BT	♦PLSB	48 - 34
SP723BE	♦PLSB	48 - 35
SP723BF	♦PLSB	48 - 36
SP724BE	♦PLSB	48 - 39
SP724BF	♦PLSB	48 - 40
SP751AF	♦PLSB	26 - 14
SP751BF	♦PLSB	26 - 15
SP1023	PLSB	19 - 21
SP1039	PLSB	31 - 97
SP1223	PLSB	19 - 22
SP1239	PLSB	31 - 98
SP1692	♦PLSB	48 - 21
SSS562-883-BCD		30 - 8
	♦PMI	
SSS562-883-BIN		29 -104
	♦PMI	
SSS562-AD-BCD		30 - 40
	♦PMI	
SSS562-AD-BIN		30 - 18
	♦PMI	
SSS562-KD-BCD		30 - 41
	♦PMI	
SSS562-KD-BIN		30 - 19
	♦PMI	
SSS562-SD-BCD		30 - 9
	♦PMI	
SSS562-SD-BIN		29 -105
	♦PMI	
SSS1408A6P	PMI	none
Repl.by DAC1408A6P Obs.		
SSS1408A7P	PMI	none
Repl.by DAC1408A7P Cur.		
SSS1408A7Q	AMD	none
	PMI	
Repl.by DAC1408A7Q Cur.		
SSS1408A8P	PMI	none
Repl.by DAC1408A8P Cur.		
SSS1408A8Q	AMD	none
	PMI	
Repl.by DAC1408A8Q Cur.		
SSS1508A8Q	AMD	none
	PMI	
Repl.by DAC1508A8Q Cur.		
SSS1508A-883-8Q		none
	PMI	
Repl.by DAC1508A-883-8Q		
		Cur.
SSS7510AQ	PMI	none
Repl.by SW7510AQ Cur.		
SSS7510BQ	PMI	none
Repl.by SW7510BQ Cur.		
SSS7510EQ	PMI	none
Repl.by SW7510EQ Cur.		
SSS7510FQ	PMI	none
Repl.by SW7510FQ Cur.		
SSS7511AQ	PMI	none
Repl.by SW7511AQ Cur.		
SSS7511BQ	PMI	none
Repl.by SW7511BQ Cur.		
SSS7511EQ	PMI	none
Repl.by SW7511EQ Cur.		
SSS7511FQ	PMI	none
Repl.by SW7511FQ Cur.		
SW01FP	PMI	38 - 11
SW02FP	PMI	36 - 19
SW03FP	PMI	38 - 12
SW04FP	PMI	36 - 20
SW05BQ	PMI	33 - 8
SW05FK/883	♦PMI	33 - 6
SW05FQ	PMI	33 - 9
SW05FY/883	♦PMI	33 - 7
SW201BQ	♦PMI	none
Repl.by SW201CQ Obs.		
SW201BQ/883	♦PMI	none
Repl.by SW201CQ/883 Cur.		
SW201CQ1883	PMI	38 - 13
SW201CQ	PMI	38 - 14
SW201FP	PMI	38 - 15
SW201FQ	♦PMI	none
Repl.by SW201GQ Obs.		
SW729-1F	♦SWM	24 - 22
SW729-1P	♦SWM	24 - 23
SW729-1S	♦SWM	24 - 24
SW729-1T	♦SWM	24 - 25
SW729-2F	♦SWM	24 - 26
SW729-2P	♦SWM	24 - 27
SW729-2S	♦SWM	24 - 28
SW729-2T	♦SWM	24 - 29
T54S151F	♦TEC	43 - 23
T54S151J	♦TEC	43 - 24
T54S152F	♦TEC	43 - 25
T54S152J	♦TEC	43 - 26
T54S153F	♦TEC	44 - 6
T54S153J	♦TEC	44 - 7
T54S157F	♦TEC	45 - 25
T54S157J	♦TEC	45 - 26
T54S158F	♦TEC	45 - 27
T54S158J	♦TEC	45 - 28
T54S251F	TEC	43 - 27
T54S251J	TEC	43 - 28
T74S151F	♦TEC	43 - 29
T74S151J	♦TEC	43 - 30
T74S152F	♦TEC	43 - 31
T74S152J	♦TEC	43 - 32
T74S153F	♦TEC	44 - 8
T74S153J	♦TEC	44 - 9
T74S157F	♦TEC	45 - 29
T74S157J	♦TEC	45 - 30
T74S158F	♦TEC	45 - 31
T74S158J	♦TEC	45 - 32
T74S251F	TEC	43 - 33
T74S251J	TEC	43 - 34
T9309F	♦TEC	43 -106
T9309FM	♦TEC	43 -107
T9309J	♦TEC	43 -108
T9309JM	♦TEC	43 -109
T9312F	♦TEC	43 - 9
T9312FM	♦TEC	43 - 10
T9312J	♦TEC	43 - 11
T9312JM	♦TEC	43 - 12
T9322F	♦TEC	45 - 4
T9322FM	♦TEC	45 - 5
T9322J	♦TEC	45 - 6
T9322JM	♦TEC	45 - 7
TC4036B	♦TOSJ	none
Repl.by TC4036BP Cur.		
TC4039B	♦TOSJ	none
Repl.by TC4039BP Cur.		
TC5030BP	TOSJ	11 - 24
TC5042BP	TOSJ	23 - 69
TC5055P	TOSJ	56 - 88
TC5090P	♦TOSJ	27 - 34
TC5091P	♦TOSJ	27 - 35
TDB1647A-DP	THEF	21 - 6
TDD0246	AEGG	56 - 72
TEB1027	THEF	21 - 1
TEB3410DC	THEF	29 - 42
TEC1031	♦THEF	21 - 4
TEC1032	♦THEF	21 - 5
TG54S04F	TEC	13 - 44
TG54S04J	TEC	13 - 45
TG54S05F	TEC	13 - 46
TG54S05J	TEC	13 - 47
TG74S04F	TEC	13 - 48
TG74S04J	TEC	13 - 49
TG74S05F	TEC	13 - 50
TG74S05J	TEC	13 - 51
TL182ML	TII	34 - 71
TL7404N	♦ALGG	13 - 4
TL7405N	♦ALGG	13 - 5
TL7406N	♦ALGG	13 - 6
TL7407N	♦ALGG	14 - 96
TL7413N	♦ALGG	55 - 58
TL7416N	♦ALGG	13 - 7
TL7417N	♦ALGG	14 - 97
TL74150N	♦ALGG	43 - 50
TL74151N	♦ALGG	43 - 13
TL74153N	♦ALGG	43 -110
TP4007UBN	TII	11 - 4
TP4009UBN	TII	31 - 59
TP4010BN	TII	31 - 60
TP4016UBN	TII	33 - 39
TP4049UBN	TII	11 - 20
TP4051BN	TII	41 - 20
TP4052BN	TII	41 - 48
TP4053BN	TII	41 - 62
TP4069UBN	ITTG	11 - 21
	TII	
TPADC85	♦TPN	27 - 83
TPADC85-83	♦TPN	27 - 84
TPADC87	♦TPN	27 - 85
TPADC87-83	♦TPN	27 - 86
TPADC87#mil	♦TPN	27 - 87
TSCH50AMJE/883		17 - 54
		none
TSCH50BMJE/883		17 - 55
		none
TT590I	♦DTL	57 - 78
TT590J	♦DTL	57 - 79
TT590K	♦DTL	57 - 80
TT590L	♦DTL	57 - 81
TT590M	♦DTL	57 - 82
uA8T13DC	♦FSC	17 - 36
uA8T13DM	♦FSC	17 - 37
uA8T13FM	FSC	17 - 38
uA8T13PC	♦FSC	17 - 39
uA8T14DC	♦FSC	49 - 24
uA8T14DM	♦FSC	49 - 25
uA8T14FM	FSC	49 - 26
uA8T14PC	♦FSC	49 - 27
uA8T23DC	♦FSC	17 - 47
uA8T23PC	♦FSC	17 - 48
uA8T24PC	FSC	49 - 28
uA438JC	FSC	23 - 58
uA0801ADM	♦FSC	28 - 56
uA0801AFM	FSC	28 - 57
uA0801CDC	FSC	28 -106
uA0801CPC	FSC	28 -107
uA0801DM	FSC	28 - 64
uA0801EDC	FSC	28 - 76
uA0801EPC	FSC	28 - 77
uA0801FM	FSC	28 - 65
uA0801HDC	FSC	28 - 58
uA0801HPC	FSC	28 - 59
uA0802ADC	♦FSC	28 - 66
uA0802APC	♦FSC	28 - 67
uA0802BDC	♦FSC	28 -101
uA0802BPC	♦FSC	28 -102
uA0802CDC	♦FSC	29 - 2
uA0802CPC	♦FSC	29 - 3
uA0802DM	♦FSC	28 - 68
uA0802FM	FSC	28 - 69
uA0802HDC	FSC	28 - 60
uA0802HPC	FSC	28 - 61
uA3448ADC	♦FSC	32 - 15
		50 - 1
uA3448APC	♦FSC	32 - 16
		50 - 2
uA5116JC	FSC	57 -108
uA5151JC	FSC	57 -109
uA5156JC	FSC	57 -110
uA9706ADC	♦FSC	29 -107
uA9706APC	♦FSC	29 -108
uA9706PC	♦FSC	29 -109
uA55107ADM	FSC	48 - 4
uA55110APC	FSC	16 - 60
uA75154DC	FSC	48 - 10
uA75451ARC	FSC	21 - 56
uA75451BRC	FSC	21 - 57
uA75452ARC	FSC	21 - 58
uA75452BRC	FSC	21 - 59
uA75453ARC	FSC	21 - 60
uA75453BRC	FSC	21 - 61
uc1671-00A	none	59 - 68
uc1671-00B	none	59 - 69
uc1671-00CL	none	59 - 70
uPB74S04D	NECJ	13 - 52
uPB7446C	NECJ	25 - 52
uPD7001	♦NECM	27 - 37
uPD8243	♦NECM	59 - 55
uPD8251	♦NECM	59 - 71
uPD8251A	♦NECM	59 - 72
uPD8251AC	♦NECM	59 - 73
uPD8251AD	♦NECM	59 - 74
uPD8251C	♦NECM	59 - 75
uPD8251D	♦NECM	59 - 76
U145M	♦AEGG	60 - 19
U175M	♦AEGG	56 - 73
UAA170L	♦SIEG	24 -104
UC6410D	♦SOD	35 - 40
UC6410F	♦SOD	35 - 41
UC7410D	♦SOD	35 - 42
UC7410F	♦SOD	35 - 43
UCN4102A	♦SPR	23 - 68
UDN2956R	♦SPR	21 - 43
UDN2957R	♦SPR	21 - 44
UDN6144A	♦SPR	24 - 57
UHC060	♦SPR	22 - 79
UHD060	♦SPR	22 - 80
UHP060	♦SPR	22 - 81
UL03C	AMI	11 - 75
ULN2140H	♦SPR	56 - 18
ULN2141A	SPR	56 - 19
ULN2141H	SPR	56 - 20
ULN2142A	SPR	56 - 21
ULN2142H	SPR	56 - 22
ULN3303M	SPR	55 - 32
ULS2140A	♦SPR	56 - 23
ULS2141A	SPR	56 - 24
ULS2141H	SPR	56 - 25
ULS2142A	SPR	56 - 26
ULS2142H	SPR	56 - 27
US75324A	SPR	20 - 22
US75324G	SPR	20 - 23
US75324H	♦SPR	20 - 24
US75324J	♦SPR	20 - 25
VADC-A	DDC	27 - 18
VADC-B	DDC	27 - 19
VMUX	♦DDC	34 - 78
XC8T28L	MOTA	50 - 48
XC8T28P	MOTA	50 - 49
XC8T95L	MOTA	14 -110
XC8T95P	MOTA	15 - 1
XC8T96L	MOTA	13 - 53
XC8T96P	MOTA	13 - 54
XC8T97L	MOTA	15 - 2
XC8T97P	MOTA	15 - 3
XC8T98L	MOTA	13 - 55
XC8T98P	MOTA	13 - 56
XC3448	♦MOTA	60 - 54
ZN425E	♦FERB	28 - 95
ZN432CE	♦FERB	27 - 46
ZN1002E	♦FERB	19 -103
ZN7441AE	FERB	25 - 95
ZSS54A	♦FERB	11 - 45
ZSS54B	♦FERB	11 - 46

♦-Mfr's data sheet available in microfilm service

Cur-In current D.A.T.A.BOOK
Δ-Registered with JEDEC by this manufacturer

Obs-In this book

1. TYPE No. CROSS INDEX

IN TYPE NUMBER SEQUENCE

TYPE No.	MFRS	Pg&Line	TYPE No.	MFRS	Pg&Line	TYPE No.	MFRS	Pg&Line	TYPE No.	MFRS	Pg&Line	TYPE No.	MFRS	Pg&Line
ZSS84A	FERB	11 - 47												
ZSS84B	FERB	11 - 48												
ZSS114A	♦GECB	11 - 41												
ZSS114B	♦GECB	11 - 42												
ZSS134A	♦GECB	11 - 43												
ZSS134B	♦GECB	11 - 44												

♦-Mfr's data sheet available in microfilm service

Cur-In current D.A.T.A.BOOK Obs-In this book
△-Registered with JEDEC by this manufacturer

2. LOGIC BUFFERS/DRIVERS

IN ORDER OF: (1)TECH (2) BASIC LOGIC (3)CKTS/DEV (4)MAX OUTP VOLT & (5)TYPE NO.

LINE No.	5 TYPE NUMBER	DATA SHT.	FNC CODE 2 BAS LOG	FNC CODE OUTP CONN	ORG. 3 CKT PER DEV	ORG. LI ON GP	1 TECH	MIN OUTPUT CURRENT (A)	° OUT (V)	4 MAX OUTP. VOLT. (V)	INPUT LOGIC LEVELS MAX '0' (V)	INPUT LOGIC LEVELS MIN '1' (V)	RATED PWR SUP SPAN NEG (V)	RATED PWR SUP SPAN POS (V)	MAX NOISE IMMUN-ITY (V)	MAX PROP. DELAY tpd (S)	MAX OPER POWER DISS (W)	OPER TEMP RANGE CODE -	OPER TEMP RANGE CODE +	DRAWINGS LOGIC OR BLOCK	DRAWINGS OUTLINE Δ=MO
1	HEF4007P		INV	DC	3	1	CMS	2.0m	.50	15	3.0	7.0	0.0	10	4.5	25n	400m	4	8	40-07A	DL14y
2	CD4007UBK		INV	DC	3	1	CMS	3.4m	1.5	18	3.0	12	0.0	15		50n	500m	5	C	40-07A	Δ004AF
3	SCL4007UBF		INV	DC	3	1	CMS	3.4m	1.5	15	3.0	12	0.0	15	4.0	50n	300m	5	C	40-07A	F16-12
4	TP4007UBN		INV	DC	3	1	CMS	3.0m	1.5	18	3.0	12	0.0	15			240u	4	8		DL14ba
5	SCL4041UBF		INV	DC	4	1	CMS	6.5m	1.5	15	3.0	12	0.0	15	4.0	90n	300m	5	C	AA119	F16-12
6	SCL4441UBF		INV	DC	4	1	CMS	18m	1.5	15	3.0	12	0.0	15	4.0	70n	300m	5	C	44-41U	F16-12
7	MB84069		INV	DC	6	1	CMS	1.3m	.50	15	3.0	7.0	0.0	15		70n	16u	5	C	74-04N	DL14bm
8	MB84069M		INV	DC	6	1	CMS	1.3m	.50	15	3.0	7.0	0.0	15		70n	80u	4	8	74-04N	D14-25
9	SFF24049AEV		INV	DC	6	1	CMS	8.0m	.50		.01	9.99	0.0	10	4.5	80n	200m	4	8	AA50c	D16-13a
10	SFF24049AKM		INV	OC	6	1	CMS	8.0m	.50		.01	9.99	0.0	10	4.5	80n	200m	5	C	AA50c	D16-13a
11	CD4069UBK		INV	DC	6	1	CMS	3.4m	1.5	18	3.0	12	0.0	15		50n	500m	5	C	54S04W	Δ004AF
12	CD4502BK		INV	3S	6	1	CMS	49m	1.5	18	0.0	15	0.0	15		65n	500m	5	C	AA7	Δ004AG
13	M4049BP#1		INV	DC	6	1	CMS	24m	1.5	18	4.0	11	0.0	15	6.7	50n	500m	4	8	40-09A	DL16ae
14	SCL4009UBF		INV	DC	6	1	CMS	3.4m	1.5	15	3.0	12	0.0	15	4.0	56n	300m	5	C	40-09A	F16-12
15	SCL4010BF		INV	DC	6	1	CMS	3.4m	1.5	15	4.0	11	0.0	15	4.0	56n	300m	5	C	40-10B	F16-12
16	SCL4049UBF		INV	DC	6	1	CMS	3.4m	1.5	15	3.0	12	0.0	15	4.0	90n	300m	5	C	40-09A	F16-12
17	SCL4069UBF		INV	DC	6	1	CMS	3.4m	1.5	15	3.0	12	0.0	15	4.0	50n	300m	5	C	54S04W	F16-12
18	SCL4449UBF		INV	DC	6	1	CMS	3.4m	1.5	15	3.0	12	0.0	15	4.0	50n	300m	5	C	40-09A	F16-12
19	SCL4502BF		INV	3S	6	2	CMS	3.4m	1.5	15	4.0	11	0.0	15	4.0	90n	300m	5	C	45-02B	F16-12
20	TP4049UBN		INV	DC	6	1	CMS	3.0m	1.5	18	3.0	12	0.0	15			240u	4	8		DL16ac
21	TP4069UBN		INV	DC	6	1	CMS	3.0m	1.5	18	3.0	12	0.0	15			240u	4	8		DL14ba
22	G74SC540D#ai		INV	3S	8	1	CMS	24m		4.0	0.8	2.0		6.5	0.4	22n	450m	0	7	AA163	
23	G74SC540P#ai		INV	3S	8	1	CMS	24m		4.0	0.8	2.0		6.5	0.4	22n	450m	0	7	AA163	
24	TC5030BP		NAND	OC	4	2	CMS	24m	1.5	18	4.0	11	0.0	15	4.0	100n	300m	4	8	AA139	DL14by
25	SFF24050AEV		NIIV	DC	6	1	CMS	8.0m	.50		.01	9.99	0.0	10	4.5	140n	200m	4	8	AA54a	D16-13a
26	SFF24050AKM		NIIV	DC	6	1	CMS	8.0m	.50		.01	9.99	0.0	10	4.5	140n	200m	5	C	AA54a	D16-13a
27	HD3-6495-2		NIV	3S	6	1	CMS	6.0m	.40	7.0	1.0	3.5	0.0	5.0	1.0	45n	50u	5	C	AA12a	DL16dv
28	HD3-6495-9		NIV	3S	6	1	CMS	6.0m	.40	7.0	1.0	3.5	0.0	5.0	1.0	45n	50u	4	8	AA12a	DL16dv
29	HD3-6495A-2		NIV	3S	6	1	CMS	12m	.40	11	2.0	7.0	0.0	10	2.0	40n	1.0m	5	C	AA12a	DL16dv
30	HD3-6495A-9		NIV	3S	6	1	CMS	12m	.40	11	2.0	7.0	0.0	10	2.0	40n	1.0m	4	8	AA12a	DL16dv
31	HD9-6495-2		NIV	3S	6	1	CMS	6.0m	.40	7.0	1.0	3.5	0.0	5.0	1.0	45n	50u	5	C	AA12a	F16-13
32	HD9-6495-9		NIV	3S	6	1	CMS	6.0m	.40	7.0	1.0	3.5	0.0	5.0	1.0	45n	50u	4	8	AA12a	F16-13
33	HD9-6495A-2		NIV	3S	6	1	CMS	12m	.40	11	2.0	7.0	0.0	10	2.0	40n	1.0m	5	C	AA12a	F16-13
34	HD9-6495A-9		NIV	3S	6	1	CMS	12m	.40	11	2.0	7.0	0.0	10	2.0	40n	1.0m	4	8	AA12a	F16-13
35	M4050BP#1		NIV	DC	6	1	CMS	24m	1.5	18	4.0	11	0.0	15	6.7	30n	500m	4	8	BC28	DL16ae
36	SCL4050BF		NIV	DC	6	1	CMS	3.4m	1.5	15	4.0	11	0.0	15	4.0	80n	300m	5	C	40-10B	F16-12
37	G74SC541D#ai		NIV	3S	8	1	CMS	24m		4.0	0.8	2.0		6.5	0.4	27n	450m	0	7	AA164	
38	G74SC541P#ai		NIV	3S	8	1	CMS	24m		4.0	0.8	2.0		6.5	0.4	27n	450m	0	7	AA164	
39	MC843G		AND	OC	2	4	DTL	250m	.50	40	1.1	1.9	0.0	5.0		230n	90m	0	7	AA91	TO100
40	MC943G		AND	OC	2	4	DTL	250m	.50	40	1.1	2.0	0.0	5.0		150n	90m	5	C	AA91	TO100
41	ZSS114A		INV		3	1	DTL	30m			1.35	1.36	0.0	5.0		25n	58m	5	C		CN9
42	ZSS114B		INV		3	1	DTL	30m			1.35	1.36	0.0	5.0		25n	58m	5	C		CN9
43	ZSS134A		INV		3	1	DTL	30m			1.35	1.36	0.0	5.0		25n	58m	0	7		CN9
44	ZSS134B		INV		3	1	DTL	30m			1.35	1.36	0.0	5.0		25n	58m	0	7		CN9
45	ZSS54A		INV	OC	3	1	DTL	25m	.55	5.0	.20	4.0	0.0	4.5	550m	17n	80m	5	C	AA87	CN9
46	ZSS54B		INV	RP	3	1	DTL	25m	.55	5.0	.20	4.0	0.0	4.5	550m	17n	80m	5	C	AA87	CN9
47	ZSS84A		INV	OC	3	1	DTL	25m	.55	5.0	.20	4.0	0.0	4.5	550m	17n	80m	0	7	AA87	CN9
48	ZSS84B		INV	RP	3	1	DTL	25m	.55	5.0	.20	4.0	0.0	4.5	550m	17n	80m	0	7	AA87	CN9
49	M5935P		INV	RP	6	1	DTL	12m	.40	6.0	.40	2.6	0.0	5.0		80n	51m	0	7	AA55a	TO116
50	M5936P		INV	RP	6	1	DTL	12m	.40	6.0	.40	2.6	0.0	5.0		80n	51m	0	7	AA55	TO116
51	M5937P		INV	RP	6	1	DTL	10m	.40	6.0	.40	3.1	0.0	5.0		50n	75m	0	7	AA55b	TO116
52	MC934F		INV	RP	6	1	DTL	12m	.40	4.5	1.1	2.0	0.0	5.0		80n	78m	5	C	AA50j	TO86
53	MC935F		INV	OC	6	1	DTL	12m	.40	4.5	1.1	2.0	0.0	5.0		80n	42m	5	C	74-05N	TO86
54	MC936F		INV	RP	6	1	DTL	12m	.40	4.5	1.1	2.0	0.0	5.0		80n	78m	5	C	54S04W	TO86
55	MC937F		INV	RP	6	1	DTL	11m	.40	4.5	1.1	2.0	0.0	5.0		60n	126m	5	C	54S04W	TO86
56	MC940F		INV	RP	6	1	DTL	12m	.40	4.5	.40	2.6	0.0	5.0		80n	66m	5	C	54S04W	TO86
57	MC941F		INV	OC	6	1	DTL	12m	.40	4.5	.40		0.0	5.0		80n	42m	5	C	74-05N	TO86
58	MIC936-1D		INV	RP	6	1	DTL	12m	.40		1.1	1.9	0.0	5.0	700m	80n	98m	5	C	74-04N	TO116
59	MIC937-1D		INV	RP	6	1	DTL	10m	.40		1.1	1.9	0.0	5.0	700m	50n	163m	5	C	74-04N	TO116
60	MC834F		INV	RP	6	1	DTL	12m	.45	5.0	1.1	1.9	0.0	5.0		80n	78m	0	7	AA50j	TO86
61	MC834L		INV	RP	6	1	DTL	12m	.45	5.0	1.1	1.9	0.0	5.0		80n	78m	0	7	AA50j	TO116
62	MC835F		INV	OC	6	1	DTL	12m	.45	5.0	1.1	1.9	0.0	5.0		80n	42m	0	7	54S05W	TO86
63	MC836F		INV	RP	6	1	DTL	12m	.45	5.0	1.1	1.9	0.0	5.0		80n	78m	0	7	54S04W	TO86
64	MC837F		INV	RP	6	1	DTL	11m	.45	5.0	1.1	1.9	0.0	5.0		60n	126m	0	7	54S04W	TO86
65	MC840F		INV	RP	6	1	DTL	12m	.45	5.0	.45	2.6	0.0	5.0		80n	66m	0	7	54S04W	TO86
66	MC841F		INV	OC	6	1	DTL	12m	.45	5.0	.45		0.0	5.0		80n	42m	0	7	54S05W	TO86
67	MIC936-5D		INV	RP	6	1	DTL	12m	.45		1.1	1.9	0.0	5.0	650m	80n	120m	0	7	74-04N	TO116
68	MIC937-5D		INV	RP	6	1	DTL	10m	.50		1.1	1.9	0.0	5.0	600m	50n	178m	0	7	74-04N	TO116
69	M5932P		NAND	RP	2	4	DTL	36m	.40	6.0	.40	2.6	0.0	5.0		80n	52m	0	7	AA31	TO116
70	MIC932-1D		NAND	TP	2	4	DTL	36m	.40		1.1	1.9	0.0	5.0	700m	80n	133m	5	C	AA104	TO116
71	MIC932-5D		NAND	TP	2	4	DTL	36m	.45		1.1	1.9	0.0	5.0	650m	80n	150m	0	7	AA104	TO116
72	304CL		NAND	RP	3	4Δ	DTL	30m	1.5	10	5.0	6.5	0.0	12	3.5	600n	588m	3	8	AA118b	DL16c
73	MB84049		INV		6	1	MOS				.01	9.99	0.0	10			200m	5	C	AA50c	DL16r
74	MB84049M		INV		6	1	MOS				.01	9.99	0.0	10			200m	4	8	AA50c	DL16q
75	UL03C		INV	Δ	8	1	MOS	6.2m	2.5	15	-3.5	-9.0	18	0.0	1.0		120	5	C	AA115	FPØ
76	MB84050		NIV		6	1	MOS				.01	9.99	0.0	10			200m	5	C	AA54a	DL16r
77	MB84050M		NIV		6	1	MOS				.01	9.99	0.0	10			200m	4	8	AA54a	DL16q
78	MC899P		INV	TP	2	2	RTL	3.0m			.50	.88	0.0	3.6		45n	90m	0	7	AA9	TO116
79	HEPC2002P-RT		INV	TP	2	1	RTL	15m	.40		.50	.80	0.0	3.6		15n	90m	0	7	AA9	TO116
80	MC889P		INV	RP	6	1	RTL	3.0m			.50	.88	0.0	3.6		48n	130m	0	7	AA50d	TO116
81	MC889AP		INV	RP	6	1	RTL	2.8m	.50		.50	.88	0.0	3.6		48n	130m	0	7	AA50d	TO116
82	NE582B		INV	OC	6	1	RTL	400m	.75	10	0.0	7.5	0.0	10		80n	800m	0	7	AA110	DL16be
83	5518		AND	3S	12	2	TTL	16m	.40		.80	2.0	0.0	5.0		23n	480m	0	7	AA78	PC12
84	5518A		AND	3S	12	2	TTL	16m	.40		.80	2.0	0.0	5.0		23n	540m	0	7	AA79	PC12
85	I424		AND	OC	16	2	TTL				.80	2.0	0.0	5.0						AA117	PCØ
86	54LS126J		INV	3S	4	1	TTL	12m	.40	5.5	.70	2.0	0.0	5.0	300m	15n	120m	5	C	74-126N	DL14ak
87	54LS126W		INV	3S	4	1	TTL	12m	.40	5.5	.70	2.0	0.0	5.0	300m	15n	120m	5	C	54-126W	F14-13
88	74LS126J		INV	3S	4	1	TTL	24m	.50	5.2	.80	2.0	0.0	5.0	400m	15n	120m	0	7	74-126N	DL14ak
89	74LS126W		INV	3S	4	1	TTL	24m	.50	5.2	.80	2.0	0.0	5.0	400m	15n	120m	0	7	54-126W	F14-13
90	54F04DM		INV	TP	6	1	TTL				.80	2.0	0.0	5.0		3.8n	77m	5	C	74-04N	DL14ao
91	54F04FM		INV	TP	6	1	TTL				.80	2.0	0.0	5.0		3.8n	77m	5	C	54S04W	TO86
92	74F04FC		INV	TP	6	1	TTL				.80	2.0	0.0	5.0		3.8n	77m	0	7	54S04W	TO86
93	74F04PC		INV	TP	6	1	TTL				.80	2.0	0.0	5.0		3.8n	77m	0	7	74-04N	DL14bn
94	74LS366DC		INV	3S	6	1	TTL	12m	.25		.80	2.0	0.0	5.0	400m	16n	120m	0	7	74-366N	DL16h
95	74LS366FC		INV	3S	6	1	TTL	12m	.25		.80	2.0	0.0	5.0	400m	16n	120m	0	7	54-366W	F16-3
96	74LS366PC		INV	3S	6	1	TTL	12m	.25		.80	2.0	0.0	5.0	400m	16n	120m	0	7	74-366N	DL16ak
97	54LS04BL		INV	TP	6	1	TTL	4.0m	.40	5.5	.70	2.0	0.0	5.0	300m	10n	33m	5	C	74-04N	CH19
98	54LS04CH		INV	TP	6	1	TTL	4.0m	.40		.70	2.0	0.0	5.0	300m	10n	33m	5	C	74-04N	CHØ
99	54LS04J		INV	TP	6	1	TTL	4.0m	.40		.70	2.0	0.0	5.0	300m	10n	33m	5	C	74-04N	DL14aq
100	54LS04W		INV	TP	6	1	TTL	4.0m	.40		.70	2.0	0.0	5.0	300m	10n	33m	5	C	54S04W	F14-9
101	54LS05BL		INV	OC	6	1	TTL	4.0m	.40	5.5	.70	2.0	0.0	5.0	300m	20n	33m	5	C	74-05N	CH19
102	54LS05CH		INV	OC	6	1	TTL	4.0m	.40	7.0	.70	2.0	0.0	5.0	300m	22n	33m	5	C	74-05N	CHØ
103	54LS05J		INV	OC	6	1	TTL	4.0m	.40	7.0	.70	2.0	0.0	5.0	300m	22n	33m	5	C	74-05N	DL14aq
104	54LS05W		INV	OC	6	1	TTL	4.0m	.40	7.0	.70	2.0	0.0	5.0	300m	22n	33m	5	C	54S05W	F14-9
105	54LS366DC		INV	3S	6	1	TTL	12m	.40		.80	2.0	0.0	5.0	300m	16n	105m	0	7	74-366N	DL16h
106	54LS366DM		INV	3S	6	1	TTL	12m	.40		.70	2.0	0.0	5.0	300m	16n	105m	5	C	74-366N	DL16h
107	54LS366FC		INV	3S	6	1	TTL	12m	.40		.80	2.0	0.0	5.0	300m	16n	105m	0	7	54-366W	F16-3
108	54LS366FM		INV	3S	6	1	TTL	12m	.40		.70	2.0	0.0	5.0	300m	16n	105m	5	C	54-366W	F16-3
109	54LS366J		INV	3S	6	1	TTL	12m	.40	5.5	.70	2.0	0.0	5.0	300m	15n	105m	5	C	AA12a	DL16w
110	54LS366PC		INV	3S	6	1	TTL	12m	.40		.80	2.0	0.0	5.0	300m	16n	105m	0	7	74-366N	DL16ak

SYMBOLS AND CODES EXPLAINED IN INTERPRETER

IN ORDER OF: (1)TECH (2) BASIC LOGIC (3)CKTS/DEV (4)MAX OUTP VOLT & (5)TYPE NO.

LINE No.	[5] TYPE NUMBER	DATA SHT.	FNC CODE [2] BAS LOG	FNC CODE OUT CONN	ORG. [3] CKT PER DEV	ORG. LI ON GP	[1] TECH	MIN OUTPUT CURRENT (A)	MIN OUTPUT CURRENT ° OUT (V)	[4] MAX OUTP. VOLT. (V)	INPUT LOGIC LEVELS MAX '0' (V)	INPUT LOGIC LEVELS MIN '1' (V)	RATED PWR SUP SPAN NEG (V)	RATED PWR SUP SPAN POS (V)	MAX NOISE IMMUN-ITY (V)	MAX PROP. DELAY tpd (S)	MAX OPER POWER DISS (W)	OPER TEMP RANGE CODE -	OPER TEMP RANGE CODE +	DRAWINGS LOGIC OR BLOCK	DRAWINGS OUTLINE Δ=MO
1	54LS366W		INV	3S	6	1	TTL	12m	.40	5.5	.70	2.0	0.0	5.0	300m	15n	105m	5	C	AA12a	F16-3b
2	54LS368DM		INV	3S	6	1	TTL	12m	.40		.70	2.0	0.0	5.0	300m	16n	105m	5	C	74-368N	DL16h
3	54LS368FM		INV	3S	6	1	TTL	12m	.40		.70	2.0	0.0	5.0	300m	16n	105m	5	C	54-368W	F16-3
4	54LS368J		INV	3S	6	1	TTL	12m	.40	5.5	.70	2.0	0.0	5.0	300m	15n	105m	5	C	74-368N	DL16w
5	54LS368W		INV	3S	6	1	TTL	12m	.40	5.5	.70	2.0	0.0	5.0	300m	15n	105m	5	C	54-368W	F16-3b
6	74H04FC		INV		6	1	TTL	20m	.40	5.0	.80	2.0	0.0	5.0	400m	10n	290m	0	7	54S04W	TO86
7	74H05FC		INV	OC	6	1	TTL	20m	.40	5.0	.80	2.0	0.0	5.0	400m	18n	290m	0	7	54-05W	TO86
8	74LS04FC		INV	TP	6	1	TTL	4.0m	.40		.80	2.0	0.0	5.0	300m	10n	33m	0	7	54S04W	TO86
9	74LS05FC		INV	OC	6	1	TTL	4.0m	.40		.80	2.0	0.0	5.0	300m	22n	33m	0	7	54S05W	TO86
10	74LS368DC		INV	3S	6	1	TTL	12m	.40		.80	2.0	0.0	5.0	300m	16n	105m	0	7	74-368N	DL16h
11	74LS368FC		INV	3S	6	1	TTL	12m	.40		.80	2.0	0.0	5.0	300m	16n	105m	0	7	54-368W	F16-3
12	74LS368PC		INV	3S	6	1	TTL	12m	.40		.80	2.0	0.0	5.0	300m	16n	105m	0	7	74-368N	DL16ak
13	7404FC		INV		6	1	TTL	16m	.40	5.0	.80	2.0	0.0	5.0	400m	22n	165m	0	7	54-04W	TO86
14	7405FC		INV	OC	6	1	TTL	16m	.40	5.0	.80	2.0	0.0	5.0	400m	55n	165m	0	7	54-05W	TO86
15	7406FC		INV	OC	6	1	TTL	16m	.40	5.0	.80	2.0	0.0	5.0	400m	23n	250m	0	7	54S05W	TO86
16	7416FC		INV	OC	6	1	TTL	16m	.40	5.0	.80	2.0	0.0	5.0	400m	23n	255m	0	7	54S05W	TO86
17	GFB7404D		INV	TP	6	1	TTL	16m	.40		.80	2.0	0.0	5.0	400m	22n	165m	0	7	74-04N	D14-10d
18	GFB7405D		INV	OC	6	1	TTL	16m	.40	5.5	.80	2.0	0.0	5.0	400m	55n	165m	0	7	74-05N	D14-10d
19	HEPC3004P-RT		INV	TP	6	1	TTL	16m	.40		.40	2.4	0.0	5.0		29n	60m			74-05	TO116
20	ITT54H04J		INV	TP	6	1	TTL	20m	.40	5.5	.80	2.0	0.0	5.0	400m	10n	290m	5	C	74-04N	D14-1d
21	ITT54H05J		INV	OC	6	1	TTL	20m	.40	5.5	.80	2.0	0.0	5.0	400m	12n	290m	5	C	74-05N	D14-1d
22	ITT74H04J		INV	TP	6	1	TTL	20m	.40	5.5	.80	2.0	0.0	5.0	400m	10n	290m	0	7	74-04N	D14-1d
23	ITT74H04N		INV	TP	6	1	TTL	20m	.40	5.5	.80	2.0	0.0	5.0	400m	10n	290m	0	7	74-04N	DL14d
24	ITT74H05J		INV	OC	6	1	TTL	20m	.40	5.5	.80	2.0	0.0	5.0	400m	12n	290m	0	7	74-05N	D14-1d
25	ITT74H05N		INV	OC	6	1	TTL	20m	.40	5.5	.80	2.0	0.0	5.0	400m	12n	290m	0	7	74-05N	DL14d
26	ITT74LS04N		INV	TP	6	1	TTL	4.0m	.40		.80	2.0	0.0	5.0	400m	15n	33m	0	7	74-04N	DL14d
27	ITT5404J		INV	TP	6	1	TTL	16m	.40	5.5	.80	2.0	0.0	5.0	400m	22n	165m	5	C	74-04N	D14-1d
28	ITT5405J		INV	OC	6	1	TTL	16m	.40	5.5	.80	2.0	0.0	5.0	400m	55n	165m	5	C	74-05N	D14-1d
29	ITT7404J		INV	TP	6	1	TTL	16m	.40	5.5	.80	2.0	0.0	5.0	400m	22n	165m	0	7	74-04N	D14-1d
30	ITT7404N		INV	TP	6	1	TTL	16m	.40	5.5	.80	2.0	0.0	5.0	400m	22n	165m	0	7	74-04N	DL14d
31	ITT7405J		INV	OC	6	1	TTL	16m	.40	5.5	.80	2.0	0.0	5.0	400m	55n	165m	0	7	74-05N	D14-1d
32	ITT7405N		INV	OC	6	1	TTL	16m	.40	5.5	.80	2.0	0.0	5.0	400m	55n	165m	0	7	74-05N	DL14d
33	JSFC404		INV	TP	6	1	TTL	16m	.40		.80	2.0	0.0	5.0		22n	90m	0	7	74-05	CH1
34	MC429F		INV	TP	6	1	TTL	20m	.40	5.5	.45	3.0	0.0	5.0		20n	90m	0	7	AA50b	TO86
35	MC429L,P%		INV	TP	6	1	TTL	20m	.40	5.5	.45	3.0	0.0	5.0		20n	90m	0	7	AA50b	TO116
36	MC479F		INV	TP	6	1	TTL	10m	.40	5.5	.45	3.0	0.0	5.0		20n	90m	0	7	AA50b	TO86
37	MC479L,P%		INV	TP	6	1	TTL	10m	.40	5.5	.45	3.0	0.0	5.0		20n	90m	0	7	AA50b	TO116
38	MC529F		INV	TP	6	1	TTL	20m	.40	5.5	.45	2.8	0.0	5.0		20n	90m	5	C	40-09	TO86
39	MC529L		INV	TP	6	1	TTL	20m	.40	5.5	.45	2.8	0.0	5.0		20n	90m	5	C	AA50b	TO116
40	MC579F		INV	TP	6	1	TTL	10m	.40	5.5	.45	2.8	0.0	5.0		20n	90m	5	C	AA50b	TO86
41	MC579L		INV	TP	6	1	TTL	10m	.40	5.5	.45	2.8	0.0	5.0		20n	90m	5	C	AA50b	TO116
42	MC2016F		INV	TP	6	1	TTL	12m	.40	5.5	.45	2.9	0.0	5.0		10n	132m	0	7	AA50b	TO86
43	MC2016L,P%		INV	TP	6	1	TTL	12m	.40	5.5	.45	2.9	0.0	5.0		10n	132m	0	7	AA50b	TO116
44	MC2066F		INV	TP	6	1	TTL	12m	.40	5.5	.45	2.9	0.0	5.0		10n	132m	0	7	AA50b	TO86
45	MC2066L,P%		INV	TP	6	1	TTL	12m	.40	5.5	.45	2.9	0.0	5.0		10n	132m	0	7	AA50b	TO116
46	MC2116F		INV	TP	6	1	TTL	12m	.40	5.5	.45	2.7	0.0	5.0		10n	132m	5	C	AA50b	TO86
47	MC2116L		INV	TP	6	1	TTL	12m	.40	5.5	.45	2.7	0.0	5.0		10n	132m	5	C	AA50b	TO116
48	MC2166F		INV	TP	6	1	TTL	12m	.40	5.5	.45	2.7	0.0	5.0		10n	132m	5	C	AA50b	TO86
49	MC2166L		INV	TP	6	1	TTL	12m	.40	5.5	.45	2.7	0.0	5.0		10n	132m	5	C	AA50b	TO116
50	MC3008F		INV	TP	6	1	TTL	20m	.40		1.1	1.8	0.0	5.0		10n	140m	0	7	54S04W	TO86
51	MC3008L		INV	TP	6	1	TTL	20m	.40		1.1	1.8	0.0	5.0		10n	140m	0	7	74-04N	TO116
52	MC3008P		INV	TP	6	1	TTL	20m	.40		1.1	1.8	0.0	5.0		10n	140m	0	7	74-04N	DL☒
53	MC3108F		INV	TP	6	1	TTL	20m	.40		1.1	1.8	0.0	5.0		10n	140m	5	C	54S04W	TO86
54	MC3108L		INV	TP	6	1	TTL	20m	.40		1.1	1.8	0.0	5.0		10n	140m	5	C	74-04N	TO116
55	MC5404F		INV	TP	6	1	TTL	16m	.40		.40	2.4	0.0	5.0		22n	60m	5	C	54-04W	TO86
56	MC5404L		INV	TP	6	1	TTL	16m	.40		.40	2.4	0.0	5.0		22n	60m	5	C	74-04N	TO116
57	MC5405F		INV	OC	6	1	TTL	16m	.40		.40	2.4	0.0	5.0		55n	60m	5	C	54-05W	TO86
58	MC5405L		INV	OC	6	1	TTL	16m	.40		.40	2.4	0.0	5.0		55n	60m	5	C	74-05N	TO116
59	MC5406L		INV	OC	6	1	TTL	16m	.40	30	.40	2.4	0.0	5.0		26n	105m	5	C	74-05N	TO116
60	MC5416L		INV	OC	6	1	TTL	16m	.40	15	.40	2.4	0.0	5.0		26n	105m	5	C	74-05N	TO116
61	MC7404F		INV	TP	6	1	TTL	16m	.40		.40	2.4	0.0	5.0		22n	60m	0	7	54-04W	TO86
62	MC7404L		INV	TP	6	1	TTL	16m	.40		.40	2.4	0.0	5.0		22n	60m	0	7	74-04N	TO116
63	MC7404P		INV	TP	6	1	TTL	16m	.40		.40	2.4	0.0	5.0		22n	60m	0	7	74-04N	TO116
64	MC7405F		INV	OC	6	1	TTL	16m	.40		.40	2.4	0.0	5.0		55n	60m	0	7	54-05W	TO86
65	MC7405L		INV	OC	6	1	TTL	16m	.40		.40	2.4	0.0	5.0		55n	60m	0	7	74-05N	TO116
66	MC7405P		INV	OC	6	1	TTL	16m	.40		.40	2.4	0.0	5.0		55n	60m	0	7	74-05N	TO116
67	MC7406L		INV	OC	6	1	TTL	16m	.40	30	.40	2.4	0.0	5.0		26n	105m	0	7	74-05N	TO116
68	MC7406P		INV	OC	6	1	TTL	16m	.40	30	.40	2.4	0.0	5.0		26n	105m	0	7	74-05N	TO116
69	MC7416L		INV	OC	6	1	TTL	16m	.40	15	.40	2.4	0.0	5.0		26n	105m	0	7	74-05N	TO116
70	MC7416P		INV	OC	6	1	TTL	16m	.40	15	.40	2.4	0.0	5.0		26n	105m	0	7	74-05N	TO116
71	MIC5404J		INV	TP	6	1	TTL	16m	.40	5.5	.80	2.0	0.0	5.0	400m	22n	165m	5	C	74-04N	DL14bg
72	MIC5405AJ		INV	OC	6	1	TTL	16m	.40	15	.80	2.0	0.0	5.0	400m	55n	165m	5	C	74-05N	DL14bg
73	MIC5405J		INV	OC	6	1	TTL	16m	.40	5.5	.80	2.0	0.0	5.0	400m	55n	165m	5	C	74-05N	DL14bg
74	MIC5406J		INV	OC	6	1	TTL	16m	.40	30	.80	2.0	0.0	5.0	400m	23n	210m	5	C	74-05N	DL14bg
75	MIC5416J		INV	OC	6	1	TTL	16m	.40	15	.80	2.0	0.0	5.0	400m	23n	210m	5	C	74-05N	DL14bg
76	MIC7404J		INV	TP	6	1	TTL	16m	.40	5.5	.80	2.0	0.0	5.0	400m	22n	165m	0	7	74-04N	DL14bg
77	MIC7404N		INV	TP	6	1	TTL	16m	.40	5.5	.80	2.0	0.0	5.0	400m	22n	165m	0	7	74-04N	D14-8c
78	MIC7405AJ		INV	OC	6	1	TTL	16m	.40	15	.80	2.0	0.0	5.0	400m	55n	165m	0	7	74-05N	DL14bg
79	MIC7405AN		INV	OC	6	1	TTL	16m	.40	15	.80	2.0	0.0	5.0	400m	55n	165m	0	7	74-05N	D14-8c
80	MIC7405J		INV	OC	6	1	TTL	16m	.40	5.5	.80	2.0	0.0	5.0	400m	55n	165m	0	7	74-05N	DL14bg
81	MIC7405N		INV	OC	6	1	TTL	16m	.40	5.5	.80	2.0	0.0	5.0	400m	55n	165m	0	7	74-05N	D14-8c
82	MIC7406J		INV	OC	6	1	TTL	16m	.40	30	.80	2.0	0.0	5.0	400m	23n	210m	0	7	74-05N	DL14bg
83	MIC7406N		INV	OC	6	1	TTL	16m	.40	30	.80	2.0	0.0	5.0	400m	23n	210m	0	7	74-05N	D14-8c
84	MIC7416J		INV	OC	6	1	TTL	16m	.40	15	.80	2.0	0.0	5.0	400m	23n	210m	0	7	74-05N	DL14bg
85	MIC7416N		INV	OC	6	1	TTL	16m	.40	15	.80	2.0	0.0	5.0	400m	23n	210m	0	7	74-05N	D14-8c
86	S54366AR		INV	3S	6	1	TTL	16m	.40		0.8	2.0	0.0	5.0		17n	385m	5	C	54-366W	F16-4
87	S54368AR		INV	3S	6	1	TTL	32m	.40		0.8	2.0	0.0	5.0		16n	385m	5	C	54-368W	F16-4
88	SFC404E		INV	TP	6	1	TTL	16m	.40		.80	2.0	0.0	5.0	400m	23n	165m	0	7	74-04N	TO116
89	SFC404EM		INV	TP	6	1	TTL	16m	.40		.80	2.0	0.0	5.0	400m	23n	165m	5	C	74-04N	TO116
90	SFC404ET		INV	TP	6	1	TTL	16m	.40		.80	2.0	0.0	5.0	400m	23n	165m	2	8	74-04N	TO116
91	SFC404HE		INV	TP	6	1	TTL	20m	.40		.80	2.0	0.0	5.0	400m	13n	200m	0	7	74-04N	TO116
92	SFC404HEM		INV	TP	6	1	TTL	20m	.40		.80	2.0	0.0	5.0	400m	13n	200m	5	C	74-04N	TO116
93	SFC404HJM		INV	TP	6	1	TTL	20m	.40		.80	2.0	0.0	5.0	400m	13n	200m	5	C	74-04N	TO116
94	SFC404HKM		INV	TP	6	1	TTL	20m	.40		.80	2.0	0.0	5.0	400m	13n	200m	5	C	74-04N	TO116
95	SFC404HPM		INV	TP	6	1	TTL	20m	.40		.80	2.0	0.0	5.0	400m	13n	200m	5	C	54-04	TO85
96	SFC404JM		INV	TP	6	1	TTL	16m	.40		.80	2.0	0.0	5.0	400m	23n	165m	5	C	74-04N	TO116
97	SFC404KM		INV	TP	6	1	TTL	16m	.40		.80	2.0	0.0	5.0	400m	23n	165m	5	C	74-04N	TO116
98	SFC404LSEM		INV	TP	6	1	TTL	4.0m	.40		.80	2.0	0.0	5.0	400m	15n	33m	5	C	74-04N	TO116
99	SFC404PM		INV	TP	6	1	TTL	16m	.40		.80	2.0	0.0	5.0	400m	23n	165m	5	C	54-04	TO85
100	SFC405E		INV	OC	6	1	TTL	16m	.40	5.5	.80	2.0	0.0	5.0	400m	23n	165m	0	7	74-05N	TO116
101	SFC405EM		INV	OC	6	1	TTL	16m	.40	5.5	.80	2.0	0.0	5.0	400m	23n	165m	5	C	74-05N	TO116
102	SFC405ET		INV	OC	6	1	TTL	16m	.40	5.5	.80	2.0	0.0	5.0	400m	23n	165m	2	8	74-05N	TO116
103	SFC405JM		INV	OC	6	1	TTL	16m	.40	5.5	.80	2.0	0.0	5.0	400m	23n	165m	5	C	74-05N	TO116
104	SFC405KM		INV	OC	6	1	TTL	16m	.40	5.5	.80	2.0	0.0	5.0	400m	23n	165m	5	C	74-05N	TO116
105	SFC405LSEM		INV	OC	6	1	TTL	4.0m	.40	7.0	.80	2.0	0.0	5.0	400m	32n	33m	5	C	74-05N	TO116
106	SFC405PM		INV	OC	6	1	TTL	16m	.40	5.5	.80	2.0	0.0	5.0	400m	23n	165m	5	C	54-04	TO85
107	SMC7404N		INV		6	1	TTL	16m	.40	5.0	.80	2.0	0.0	5.0	400m	22n	165m	0	7	74-04N	DL14ak
108	SMC7405N		INV	OC	6	1	TTL	16m	.40	5.0	.80	2.0	0.0	5.0	400m	55n	165m	0	7	74-05N	DL14ak
109	SMC7406N		INV	OC	6	1	TTL	16m	.40	5.0	.80	2.0	0.0	5.0	400m	23n	250m	0	7	74-05N	DL14ak
110	SN54LS366AW		INV	3S	6	1	TTL	12m	.40	5.5	.70	2.0	0.0	5.0	300m	16n	105m	5	C	54-366W	F16-14

2. LOGIC BUFFERS/DRIVERS

IN ORDER OF: (1)TECH (2) BASIC LOGIC (3)CKTS/DEV (4)MAX OUTP VOLT & (5)TYPE NO.

LINE No.	[5] TYPE NUMBER	DATA SHT.	FNC CODE [2] BAS LOG	FNC CODE OUT CONN	ORG. [3] CKT PER DEV	ORG. LI ON GP	[1] TECH	MIN OUTPUT CURRENT (A)	MIN OUTPUT CURRENT ° OUT (V)	[4] MAX OUTP. VOLT. (V)	INPUT LOGIC LEVELS MAX '0' (V)	INPUT LOGIC LEVELS MIN '1' (V)	RATED PWR SUP SPAN NEG (V)	RATED PWR SUP SPAN POS (V)	MAX NOISE IMMUN-ITY (V)	MAX PROP. DELAY tpd (S)	MAX OPER POWER DISS (W)	OPER TEMP RANGE CODE -	OPER TEMP RANGE CODE +	DRAWINGS LOGIC OR BLOCK	DRAWINGS OUTLINE Δ=MO
1	SN54LS368AW		INV	3S	6	1	TTL	12m	.40	5.5	.70	2.0	0.0	5.0	300m	16n	105m	5	C	54-368W	F16-14
2	SN74LS04W		INV	TP	6	1	TTL	4.0m	.40	5.5	.80	2.0	0.0	5.0	300m	10n	33m	0	7	54S04W	F14-18
3	SN74LS05W		INV	OC	6	1	TTL	4.0m	.40	5.5	.80	2.0	0.0	5.0	300m	22n	33m	0	7	54S05W	F14-18
4	TL7404N		INV	TP	6	1	TTL	16m	.40	5.5	.80	2.0	0.0	5.0	1.0	22n	165m	0	7	74-04N	DLØ
5	TL7405N		INV	OC	6	1	TTL	16m	.40	5.5	.80	2.0	0.0	5.0	1.0	55n	165m	0	7	74-05N	DLØ
6	TL7406N		INV	OC	6	1	TTL	16m	.40		.80	2.0	0.0	5.0	1.0	23n	255m	0	7	74-05N	DLØ
7	TL7416N		INV	OC	6	1	TTL	16m	.40	5.5	.80	2.0	0.0	5.0	1.0	23n	255	0	7	74-05N	DLØ
8	74LS04J		INV	TP	6	1	TTL	8.0m	.45	5.5	.80	2.0	0.0	5.0	400m	10n	33m	0	7	74-04N	DL14ak
9	74LS04W		INV	TP	6	1	TTL	8.0m	.45	5.5	.80	2.0	0.0	5.0	400m	10n	33m	0	7	54S04W	F14-13
10	9016FC		INV		6	1	TTL	14m	.45		.85	2.0	0.0	5.0		15n	183m	0	7	54S04W	TO86
11	9017DC		INV	OC	6	1	TTL	14m	.45		.85	2.0	0.0	5.0		45n	183m	0	7	74-05N	DL14ao
12	9017DM		INV	OC	6	1	TTL	14m	.45		.85	2.0	0.0	5.0		45n	183m	5	C	74-05N	DL14ao
13	9017FC		INV	OC	6	1	TTL	14m	.45		.85	2.0	0.0	5.0		45n	183m	0	7	54S05W	TO86
14	74LS05J		INV	OC	6	1	TTL	8.0m	.50	5.5	.80	2.0	0.0	5.0	400m	20n	33m	0	7	74-05N	DL14ak
15	74LS05W		INV	OC	6	1	TTL	8.0m	.50	5.5	.80	2.0	0.0	5.0	400m	20n	33m	0	7	54S05W	F14-13
16	74LS366AFC		INV	3S	6	1	TTL	24m	.50		.80	2.0	0.0	5.0	300m	22n	105m	0	7	54-366W	F16-3
17	74LS366J		INV	3S	6	1	TTL	24m	.50	5.2	.80	2.0	0.0	5.0	400m	15n	105m	0	7	AA12a	DL16w
18	74LS366W		INV	3S	6	1	TTL	24m	.50	5.2	.80	2.0	0.0	5.0	400m	15n	105m	0	7	AA12a	F16-3b
19	74LS368AFC		INV	3S	6	1	TTL	24m	.50		.80	2.0	0.0	5.0	300m	22n	105m	0	7	54-368W	F16-3
20	74LS368J		INV	3S	6	1	TTL	24m	.50	5.2	.80	2.0	0.0	5.0	400m	15n	105m	0	7	74-368N	DL16w
21	74LS368W		INV	3S	6	1	TTL	24m	.50	5.2	.80	2.0	0.0	5.0	400m	15n	105m	0	7	54-368W	F16-3b
22	74S04AFC		INV		6	1	TTL	20m	.50	5.0	.80	2.0	0.0	5.0	300m	4.0n	270m	0	7	54S04W	TO86
23	74S04FC		INV	TP	6	1	TTL	20m	.50	5.5	.80	2.0	0.0	5.0		5.0n	270m	0	7	54S04W	TO86
24	74S05AFC		INV	OC	6	1	TTL	20m	.50	5.0	.80	2.0	0.0	5.0	300m	7.5n	270m	0	7	54S05W	TO86
25	74S05FC		INV	OC	6	1	TTL	20m	.50	5.5	.80	2.0	0.0	5.0		7.0n	270m	0	7	54S05W	TO86
26	M5S004P		INV	TP	6	1	TTL	20m	.50	7.0	.80	2.0	0.0	5.0		5.0n	270n	0	7	74-04N	TO116
27	M5S005P		INV	OC	6	1	TTL	20m	.50	7.0	.80	2.0	0.0	5.0		7.5n	270m	0	7	74-05N	TO116
28	M74LS366P		INV	3S	6	1	TTL	24m	.50	5.5	.80	2.0	0.0	5.0	1.0	30n	105m	2	7	74-366N	DL16dy
29	M74LS368P		INV	3S	6	1	TTL	24m	.50	5.5	.80	2.0	0.0	5.0	1.0	30n	105m	2	7	74-368N	DL16dy
30	N8T93A		INV	TP	6	1	TTL	20m	.50		.80	2.0	0.0	5.0	300m	5.0n	270m	0	7	74-04N	DL14b
31	N8T94A		INV	OC	6	1	TTL	20m	.50	5.5	.80	2.0	0.0	5.0	300m	6.0n	270m	0	7	74-05N	DL14b
32	N8T96B		INV	3S	6	1	TTL	48m	.50		.80	2.0	0.0	5.0	300m	11n	295m	0	7	74-366N	DL16be
33	N8T98B		INV	3S	6	1	TTL	48m	.50		.80	2.0	0.0	5.0	300m	11n	295m	0	7	74-368	DL16be
34	SFC404LSE		INV	TP	6	1	TTL	8.0m	.50		.80	2.0	0.0	5.0	400m	15n	33m	0	7	74-04N	TO116
35	SFC404SE		INV	TP	6	1	TTL	20m	.50		.80	2.0	0.0	5.0	400m	5.0n	270m	0	7	74-04N	TO116
36	SFC404SJM		INV	TP	6	1	TTL	20m	.50		.80	2.0	0.0	5.0	400m	5.0n	270m	5	C	74-04N	TO116
37	SFC404SKM		INV	TP	6	1	TTL	20m	.50		.80	2.0	0.0	5.0	400m	5.0n	270m	5	C	74-04N	TO116
38	SFC405LSE		INV	OC	6	1	TTL	8.0m	.50	7.0	.80	2.0	0.0	5.0	400m	32n	33m	0	7	74-05N	TO116
39	SFC405SE		INV	OC	6	1	TTL	20m	.50		.80	2.0	0.0	5.0	400m	7.5n	270m	0	7	74-05N	TO116
40	SFC405SJM		INV	OC	6	1	TTL	20m	.50		.80	2.0	0.0	5.0	400m	7.5n	270m	5	C	74-05N	TO116
41	SFC405SKM		INV	OC	6	1	TTL	20m	.50		.80	2.0	0.0	5.0	400m	7.5n	270m	5	C	74-05N	TO116
42	SN74LS366AW		INV	3S	6	1	TTL	24m	.50	5.5	.80	2.0	0.0	5.0	300m	16n	105m	0	7	54-366W	F16-14
43	SN74LS368AW		INV	3S	6	1	TTL	24m	.50	5.5	.80	2.0	0.0	5.0	300m	16m	105m	0	7	54-368W	F16-14
44	TG54S04F		INV	TP	6	1	TTL	20m	.50	7.0	.80	2.0	0.0	5.0		5.0n	270m	5	C	54S04W	TO86
45	TG54S04J		INV	TP	6	1	TTL	20m	.50	7.0	.80	2.0	0.0	5.0		5.0n	270m	5	C	74-04N	TO116
46	TG54S05F		INV	OC	6	1	TTL	20m	.50	7.0	.80	2.0	0.0	5.0		7.5n	270m	5	C	54S05W	TO86
47	TG54S05J		INV	OC	6	1	TTL	20m	.50	7.0	.80	2.0	0.0	5.0		7.5n	270m	5	C	74-05N	TO116
48	TG74S04F		INV	TP	6	1	TTL	20m	.50	7.0	.80	2.0	0.0	5.0		5.0n	270m	0	7	54S04W	TO86
49	TG74S04J		INV	TP	6	1	TTL	20m	.50	7.0	.80	2.0	0.0	5.0		5.0n	270m	0	7	74-04N	TO116
50	TG74S05F		INV	OC	6	1	TTL	20m	.50	7.0	.80	2.0	0.0	5.0		7.5n	270m	0	7	54S05W	TO86
51	TG74S05J		INV	OC	6	1	TTL	20m	.50	7.0	.80	2.0	0.0	5.0		7.5n	270m	0	7	74-05N	TO116
52	uPB74S04D		INV	TP	6	1	TTL	20m	.50		.80	2.0	0.0	5.0	1.0	4.5n	270m	0	7	74-04N	Δ001AA
53	XC8T96L		INV	3S	6	1	TTL	48m	.50		.80	2.0	0.0	.25	300m	12n	467m	0	7	74-366N	DL16d
54	XC8T96P		INV	3S	6	1	TTL	48m	.50		.80	2.0	0.0	.25	300m	12n	467m	0	7	74-366N	DL16ad
55	XC8T98L		INV	3S	6	1	TTL	48m	.50		.80	2.0	0.0	.25	300m	12n	467m	0	7	74-365	DL16d
56	XC8T98P		INV	3S	6	1	TTL	48m	.50		.80	2.0	0.0	.25	300m	12n	467m	0	7	74-365	DL16ad
57	ITT5406J		INV	OC	6	1	TTL	30m	.70	30	.80	2.0	0.0	5.0	400m	15n	190m	5	C	74-05N	D14-1d
58	ITT5416J		INV	OC	6	1	TTL	30m	.70	15	.80	2.0	0.0	5.0	400m	15n	190m	5	C	74-05N	D14-1d
59	ITT7406J		INV	OC	6	1	TTL	40m	.70	30	.80	2.0	0.0	5.0	400m	15n	190m	0	7	74-05N	D14-1d
60	ITT7406N		INV	OC	6	1	TTL	40m	.70	30	.80	2.0	0.0	5.0	400m	15n	190m	0	7	74-05N	DL14d
61	ITT7416J		INV	OC	6	1	TTL	40m	.70	15	.80	2.0	0.0	5.0	400m	15n	190m	0	7	74-05N	D14-1d
62	ITT7416N		INV	OC	6	1	TTL	40m	.70	15	.80	2.0	0.0	5.0	400m	15n	190m	0	7	74-05N	DL14d
63	SFC406E		INV	OC	6	1	TTL	40m	.70	30	.80	2.0	0.0	5.0	400m	23n	255m	0	7	74-05N	TO116
64	SFC406EM		INV	OC	6	1	TTL	30m	.70	30	.80	2.0	0.0	5.0	400m	23n	255m	5	C	74-05N	TO116
65	SFC406ET		INV	OC	6	1	TTL	30m	.70	30	.80	2.0	0.0	5.0	400m	23n	255m	2	8	74-05N	TO116
66	SFC406JM		INV	OC	6	1	TTL	30m	.70	30	.80	2.0	0.0	5.0	400m	23n	255m	5	C	74-05N	TO116
67	SFC406KM		INV	OC	6	1	TTL	30m	.70	30	.80	2.0	0.0	5.0	400m	23n	255m	5	C	74-05N	TO116
68	SFC406PM		INV	OC	6	1	TTL	30m	.70	30	.80	2.0	0.0	5.0	400m	23n	255m	5	C	54S05W	TO85
69	SFC416E		INV	OC	6	1	TTL	40m	.70	15	.80	2.0	0.0	5.0	400m	23n	255m	0	7	74-05N	TO116
70	SFC416EM		INV	OC	6	1	TTL	30m	.70	15	.80	2.0	0.0	5.0	400m	23n	255m	5	C	74-05N	TO116
71	SFC416ET		INV	OC	6	1	TTL	30m	.70	15	.80	2.0	0.0	5.0	400m	23n	255m	2	8	74-05N	TO116
72	SFC416JM		INV	OC	6	1	TTL	30m	.70	15	.80	2.0	0.0	5.0	400m	23n	255m	5	C	74-05N	TO116
73	SFC416KM		INV	OC	6	1	TTL	30m	.70	15	.80	2.0	0.0	5.0	400m	23n	255m	5	C	74-05N	TO116
74	SFC416PM		INV	OC	6	1	TTL	30m	.70	15	.80	2.0	0.0	5.0	400m	23n	255m	5	C	54S05W	TO85
75	MC697		INV	RP	6	1	TTL	12m	1.5	12	6.5	8.5	0.0	15		125n	246m	3	7	6-97P	
76	M74LS620P#1		INV	3S	8	1	TTL	34m	.50	5.5	0.6	2.0	0.0	5.0		15n	500m	2	7	74LS620	DL20s
77	SFC601E		INV	3S	10	1	TTL	16m	.40		.80	2.0	0.0	5.0	400m	22n	400m	0	7	AA52	DL24au
78	54LS40CH		NAND	TP	2	4	TTL	12m	.40		.70	2.0	0.0	5.0	300m	14n	30m	5	C	54S00W	CHØ
79	54LS40J		NAND	TP	2	4	TTL	12m	.40		.70	2.0	0.0	5.0	300m	14n	30m	5	C	74-13N	DL14aq
80	54LS40W		NAND	TP	2	4	TTL	12m	.40		.70	2.0	0.0	5.0	300m	14n	30m	5	C	54-13W	F14-9
81	74H40FC		NAND	TP	2	4	TTL	60m	.40	5.0	.80	2.0	0.0	5.0	400m	12n	200m	0	7	54-40W	TO86
82	7440FC		NAND	TP	2	4	TTL	48m	.40	5.0	.80	2.0	0.0	5.0	400m	22n	135m	0	7	54-40W	TO86
83	GFB7440D		NAND	TP	2	4	TTL	48m	.40		.80	2.0	0.0	5.0	400m	22n	135m	0	7	74-13N	D14-10d
84	ITT54H40J		NAND	TP	2	4	TTL	20m	.40	5.5	.80	2.0	0.0	5.0	400m	12n	80m	5	C	AA105	D14-1d
85	ITT74H40J		NAND	TP	2	4	TTL	20m	.40	5.5	.80	2.0	0.0	5.0	400m	12n	80m	0	7	AA105	D14-1d
86	ITT74H40N		NAND	TP	2	4	TTL	20m	.40	5.5	.80	2.0	0.0	5.0	400m	12n	80m	0	7	AA105	DL14d
87	MIC5440J		NAND	TP	2	4	TTL	48m	.40	5.5	.80	2.0	0.0	5.0	400m	22n	135m	5	C	74-13N	DL14bg
88	MIC7440J		NAND	TP	2	4	TTL	48m	.40	5.5	.80	2.0	0.0	5.0	400m	22n	135m	0	7	74-13N	DL14bg
89	MIC7440N		NAND	TP	2	4	TTL	48m	.40	5.5	.80	2.0	0.0	5.0	400m	22n	135m	0	7	74-13N	D14-8c
90	SFC440E		NAND	TP	2	4	TTL	48m	.40		.80	2.0	0.0	5.0	400m	22n	135m	0	7	74-13N	TO116
91	SFC440EM		NAND	TP	2	4	TTL	48m	.40		.80	2.0	0.0	5.0	400m	22n	135m	5	C	74-13N	TO116
92	SFC440ET		NAND	TP	2	4	TTL	48m	.40		.80	2.0	0.0	5.0	400m	22n	135m	2	8	74-13N	TO116
93	SFC440HE		NAND	TP	2	4	TTL	60m	.40		.80	2.0	0.0	5.0		12n	200m	0	7	74-13N	TO116
94	SFC440HEM		NAND	TP	2	4	TTL	60m	.40		.80	2.0	0.0	5.0		12n	200m	5	C	74-13N	TO116
95	SFC440HJM		NAND	TP	2	4	TTL	60m	.40		.80	2.0	0.0	5.0	400m	12n	200m	5	C	74-13N	TO116
96	SFC440HKM		NAND	TP	2	4	TTL	60m	.40		.80	2.0	0.0	5.0		12n	200m	5	C	74-13N	TO116
97	SFC440HPM		NAND	TP	2	4	TTL	60m	.40		.80	2.0	0.0	5.0		12n	200m	5	C	74-13N	TO85
98	SFC440JM		NAND	TP	2	4	TTL	48m	.40		.80	2.0	0.0	5.0	400m	22n	135m	5	C	74-13N	TO116
99	SFC440KM		NAND	TP	2	4	TTL	48m	.40		.80	2.0	0.0	5.0	400m	22n	135m	5	C	74-13N	TO116
100	SFC440LSEM		NAND	TP	2	4	TTL	12m	.40		.80	2.0	0.0	5.0	400m	24n	30m	5	C	74-13N	TO116
101	SFC440PM		NAND	TP	2	4	TTL	48m	.40		.80	2.0	0.0	5.0	400m	22n	135m	5	C	74-13N	TO85
102	74LS40FC		NAND	TP	2	4	TTL	60m	.50		.80	2.0	0.0	5.0	300m	24n	30m	0	7	54-13W	TO86
103	74LS40J		NAND	TP	2	4	TTL	22m	.50	5.2	.80	2.0	0.0	5.0	400m	15n	30m	0	7	74-13N	DL14ak
104	74LS40W		NAND	TP	2	4	TTL	22m	.50	5.2	.80	2.0	0.0	5.0	400m	15n	30m	0	7	54-13W	F14-13
105	74S40FC		NAND	TP	2	4	TTL	60m	.50	5.5	.80	2.0	0.0	5.0	300m	6.5n	220m	0	7	54S00W	TO86
106	M5S040P		NAND	TP	2	4	TTL	60m	.50	7.0	.80	2.0	0.0	5.0		6.5n	110m	0	7	54S00W	TO116
107	SFC440LSE		NAND	TP	2	4	TTL	24m	.50		.80	2.0	0.0	5.0	400m	24n	30m	0	7	74-13N	TO116
108	SN74LS40W		NAND	TP	2	4	TTL	24m	.50	5.5	.80	2.0	0.0	5.0	300m	24n	30m	0	7	54-13W	F14-18
109	54LS37CH		NAND	TP	4	2	TTL	12m	.40		.70	2.0	0.0	5.0	300m	14n	60m	5	C	54S03W	CHØ
110	54LS37J		NAND	TP	4	2	TTL	12m	.40		.70	2.0	0.0	5.0	300m	14n	60m	5	C	74-00N	DL14aq

2. LOGIC BUFFERS/DRIVERS

IN ORDER OF: (1)TECH (2) BASIC LOGIC (3)CKTS/DEV (4)MAX OUTP VOLT & (5)TYPE NO.

LINE No.	5 TYPE NUMBER	DATA SHT.	FNC CODE 2 BAS LOG	OCUTPN	ORG. 3 CKT PER DEV	LION GP	1 TECH	MIN OUTPUT CURRENT (A)	° OUT (V)	4 MAX OUTP. VOLT. (V)	INPUT LOGIC LEVELS MAX '0' (V)	MIN '1' (V)	RATED PWR SUP SPAN NEG (V)	POS (V)	MAX NOISE IMMUN -ITY (V)	MAX PROP. DELAY tpd (S)	MAX OPER POWER DISS (W)	OPER TEMP RANGE CODE -	+	DRAWINGS LOGIC OR BLOCK	OUTLINE Δ=MO
1	54LS37W		NAND	TP	4	2	TTL	12m	.40		.70	2.0	0.0	5.0	300m	14n	60m	5	C	54S00W	F14-9
2	54LS38CH		NAND	OC	4	2	TTL	12m	.40	7.0	.70	2.0	0.0	5.0	300m	25n	60m	5	C	54S03W	CHØ
3	54LS38J		NAND	OC	4	2	TTL	12m	.40	7.0	.70	2.0	0.0	5.0	300m	25n	60m	5	C	74-03N	DL14aq
4	54LS38W		NAND	OC	4	2	TTL	12m	.40	7.0	.70	2.0	0.0	5.0	300m	25n	60m	5	C	54S03W	F14-9
5	7437FC		NAND		4	2	TTL	48m	.40	5.0	.80	2.0	0.0	5.0	400m	22n	270m	0	7	54S00W	TO86
6	7438FC		NAND	OC	4	2	TTL	48m	.40	5.0	.80	2.0	0.0	5.0	400m	22n	270m	0	7	54S03W	TO86
7	7439FC		NAND	OC	4	2	TTL	48m	.40	5.0	.80	2.0	0.0	5.0	400m	22n	270m	0	7	54LS01W	TO86
8	ITT5437J		NAND	TP	4	2	TTL	16m	.40	5.5	.80	2.0	0.0	5.0	400m	22n	270m	5	C	74-00N	D14-1d
9	ITT7437J		NAND	TP	4	2	TTL	16m	.40	5.5	.80	2.0	0.0	5.0	400m	22n	270m	0	7	74-00N	D14-1d
10	ITT7437N		NAND	TP	4	2	TTL	16m	.40	5.5	.80	2.0	0.0	5.0	400m	22n	270m	0	7	74-00N	DL14d
11	JSFC440		NAND	TP	4	2	TTL	48m	.40		.80	2.0	0.0	5.0		22n	85m	0	7	74-05	CH2
12	MIC5426J		NAND	OC	4	2	TTL	16m	.40	15	.80	2.0	0.0	5.0	400m	22n	40m	5	C	74-03N	TO116
13	MIC5437J		NAND	TP	4	2	TTL	48m	.40	5.5	.80	2.0	0.0	5.0	400m	22n	270m	5	C	54S03W	
14	MIC5438AJ		NAND	OC	4	2	TTL	48m	.40	15	.80	2.0	0.0	5.0	400m	22n	270m	5	C	74-03N	DL14bg
15	MIC5438J		NAND	OC	4	2	TTL	48m	.40	5.5	.80	2.0	0.0	5.0	400m	22n	270m	5	C	74-03N	DL14bg
16	MIC7426J		NAND	OC	4	2	TTL	16m	.40	15	.80	2.0	0.0	5.0	400m	22n	40m	0	7	74-03N	TO116
17	MIC7426N		NAND	OC	4	2	TTL	16m	.40	15	.80	2.0	0.0	5.0	400m	22n	40m	0	7	74-03N	TO116
18	MIC7437J		NAND	TP	4	2	TTL	48m	.40	5.5	.80	2.0	0.0	5.0	400m	22n	270m	0	7	74-00N	DL14bg
19	MIC7437N		NAND	TP	4	2	TTL	48m	.40	5.5	.80	2.0	0.0	5.0	400m	22n	270m	0	7	74-00N	D14-8c
20	MIC7438AJ		NAND	OC	4	2	TTL	48m	.40	15	.80	2.0	0.0	5.0	400m	22n	270m	0	7	74-03N	DL14bg
21	MIC7438AN		NAND	OC	4	2	TTL	48m	.40	15	.80	2.0	0.0	5.0	400m	22n	270m	0	7	74-03N	D14-8c
22	MIC7438J		NAND	OC	4	2	TTL	48m	.40	5.5	.80	2.0	0.0	5.0	400m	22n	270m	0	7	74-03N	DL14bg
23	MIC7438N		NAND	OC	4	2	TTL	48m	.40	5.5	.80	2.0	0.0	5.0	400m	22n	270m	0	7	74-03N	D14-8c
24	SFC437E		NAND	TP	4	2	TTL	48m	.40		.80	2.0	0.0	5.0	400m	22n	270m	0	7	74-00N	TO116
25	SFC437EM		NAND	TP	4	2	TTL	48m	.40		.80	2.0	0.0	5.0	400m	22n	270m	5	C	74-00N	TO116
26	SFC437ET		NAND	TP	4	2	TTL	48m	.40		.80	2.0	0.0	5.0	400m	22n	270m	2	8	74-00N	TO116
27	SFC437JM		NAND	TP	4	2	TTL	48m	.40		.80	2.0	0.0	5.0	400m	22n	270m	5	C	74-00N	TO116
28	SFC437KM		NAND	TP	4	2	TTL	48m	.40		.80	2.0	0.0	5.0	400m	22n	270m	5	C	74-00N	TO116
29	SFC437LSEM		NAND	TP	4	2	TTL	4.0m	.40		.80	2.0	0.0	5.0	400m	24n	60m	5	C	74-00N	TO116
30	SFC437PM		NAND	TP	4	2	TTL	48m	.40		.80	2.0	0.0	5.0	400m	22n	270m	5	C	54-00W	TO85
31	SFC438E		NAND	OC	4	2	TTL	48m	.40		.80	2.0	0.0	5.0	400m	22n	270m	0	7	74-03N	TO116
32	SFC438EM		NAND	OC	4	2	TTL	48m	.40		.80	2.0	0.0	5.0	400m	22n	270m	5	C	74-03N	TO116
33	SFC438ET		NAND	OC	4	2	TTL	48m	.40		.80	2.0	0.0	5.0	400m	22n	270m	2	8	74-03N	TO116
34	SFC438JM		NAND	OC	4	2	TTL	48m	.40		.80	2.0	0.0	5.0	400m	22n	270m	5	C	74-03N	TO116
35	SFC438KM		NAND	OC	4	2	TTL	48m	.40		.80	2.0	0.0	5.0	400m	22n	270m	5	C	74-03N	TO116
36	SFC438LSEM		NAND	OC	4	2	TTL	12m	.40	7.0	.80	2.0	0.0	5.0	400m	32n	60m	5	C	74-03N	TO116
37	SFC438PM		NAND	OC	4	2	TTL	48m	.40		.80	2.0	0.0	5.0	400m	22n	270m	5	C	54S03W	TO85
38	74LS37J		NAND	TP	4	2	TTL	22m	.50	5.2	.80	2.0	0.0	5.0	400m	15n	60m	0	7	74-00N	DL14ak
39	74LS37W		NAND	TP	4	2	TTL	22m	.50	5.2	.80	2.0	0.0	5.0	400m	15n	60m	0	7	54S00W	F14-13
40	74LS38J		NAND	OC	4	2	TTL	24m	.50	5.2	.80	2.0	0.0	5.0	400m	30n	60m	0	7	74-03N	DL14ak
41	74LS38W		NAND	OC	4	2	TTL	24m	.50	5.2	.80	2.0	0.0	5.0	400m	30n	60m	0	7	54S03W	F14-13
42	SFC437LSE		NAND	TP	4	2	TTL	8.0m	.50		.80	2.0	0.0	5.0	400m	24n	60m	0	7	74-00N	TO116
43	SFC438LSE		NAND	OC	4	2	TTL	24m	.50	7.0	.80	2.0	0.0	5.0	400m	32n	60m	0	7	74-03N	TO116
44	SN74LS37W		NAND	TP	4	2	TTL	24m	.50	5.5	.80	2.0	0.0	5.0	300m	20n	60m	0	7	54S00W	F14-18
45	SN74LS38W		NAND	OC	4	2	TTL	24m	.50	5.5	.80	2.0	0.0	5.0	300m	22n	60m	0	7	54S03W	F14-18
46	54LS125DM		NIV	3S	4	1	TTL	12m	.40		.70	2.0	0.0	5.0	300m	16n	100m	5	C	74-125N	DL14ao
47	54LS125FM		NIV	3S	4	1	TTL	12m	.40		.70	2.0	0.0	5.0	300m	16n	100m	5	C	54-125W	TO86
48	54LS125J		NIV	3S	4	1	TTL	12m	.40	5.5	.70	2.0	0.0	5.0	300m	15n	100m	5	C	74-125N	DL14ak
49	54LS125W		NIV	3S	4	1	TTL	12m	.40	5.5	.70	2.0	0.0	5.0	300m	15n	100m	5	C	54-125W	F14-13
50	74LS125AFC		NIV	3S	4	1	TTL	16m	.40		.80	2.0	0.0	5.0	300m	18n	100m	0	7	54-125W	TO86
51	74LS125DC		NIV	3S	4	1	TTL	12m	.40		.80	2.0	0.0	5.0	300m	16n	100m	0	7	74-125N	DL14ao
52	74LS125FC		NIV	3S	4	1	TTL	12m	.40		.80	2.0	0.0	5.0	300m	16n	100m	0	7	54-125W	TO86
53	74LS125PC		NIV	3S	4	1	TTL	12m	.40		.80	2.0	0.0	5.0	300m	16n	100m	0	7	74-125N	DL14bn
54	74125FC		NIV	3S	4	1	TTL	16m	.40		.80	2.0	0.0	5.0	400m	18n	270m	0	7	54-125W	TO86
55	74126FC		NIV	3S	4	2	TTL	16m	.40		.80	2.0	0.0	5.0	400m	18n	310m	0	7	54-126W	TO86
56	74LS125J		NIV	3S	4	1	TTL	24m	.50	5.2	.80	2.0	0.0	5.0	400m	15n	100m	0	7	74-125N	DL14ak
57	74LS125W		NIV	3S	4	1	TTL	24m	.50	5.2	.80	2.0	0.0	5.0	400m	15n	100m	0	7	54-125W	F14-13
58	74LS126FC		NIV	3S	4	2	TTL	16m	.50		.80	2.0	0.0	5.0	300m	18n	120m	0	7	54-126W	TO86
59	M74LS125P		NIV	3S	4	1	TTL	24m	.50	5.5	.80	2.0	0.0	5.0	1.0	25n	110m	2	7	74-125N	DL14bz
60	M74LS126P		NIV	3S	4	1	TTL	24m	.50	5.5	.80	2.0	0.0	5.0	1.0	30n	110m	2	7	74-126N	DL14bz
61	SN74LS125AW		NIV	3S	4	1	TTL	24m	.50	5.5	.80	2.0	0.0	5.0	300m	18n	100m	0	7	54-125W	F14-18
62	SN74LS126AW		NIV	3S	4	1	TTL	24m	.50	5.5	.80	2.0	0.0	5.0	300m	18n	120m	0	7	54-126W	F14-18
63	54LS365DM		NIV	3S	6	1	TTL	12m	.40		.70	2.0	0.0	5.0	300m	16n	120m	5	C	AA12a	DL16h
64	54LS365FM		NIV	3S	6	1	TTL	12m	.40		.70	2.0	0.0	5.0	300m	16n	120m	5	C	AA12a	F16-3
65	54LS365J		NIV	3S	6	1	TTL	12m	.40	5.5	.70	2.0	0.0	5.0	300m	15n	120m	5	C	74-365N	DL16w
66	54LS365W		NIV	3S	6	1	TTL	12m	.40	5.5	.70	2.0	0.0	5.0	300m	15n	120m	5	C	54-365W	F16-3b
67	54LS367DM		NIV	3S	6	1	TTL	12m	.40		.70	2.0	0.0	5.0	300m	16n	120m	5	C	74-367N	DL16h
68	54LS367FM		NIV	3S	6	1	TTL	12m	.40		.70	2.0	0.0	5.0	300m	16n	120m	5	C	54-367W	F16-3
69	54LS367J		NIV	3S	6	1	TTL	12m	.40	5.5	.70	2.0	0.0	5.0	300m	15n	120m	5	C	74-367N	DL16w
70	54LS367W		NIV	3S	6	1	TTL	12m	.40	5.5	.70	2.0	0.0	5.0	300m	15n	120m	5	C	54-367W	F16-3b
71	74LS365DC		NIV	3S	6	1	TTL	12m	.40		.80	2.0	0.0	5.0	300m	16n	120m	0	7	AA12a	DL16h
72	74LS365FC		NIV	3S	6	1	TTL	12m	.40		.80	2.0	0.0	5.0	300m	16n	120m	0	7	AA12a	F16-3
73	74LS365PC		NIV	3S	6	1	TTL	12m	.40		.80	2.0	0.0	5.0	300m	16n	120m	0	7	AA12a	DL16ak
74	74LS367DC		NIV	3S	6	1	TTL	12m	.40		.80	2.0	0.0	5.0	300m	16n	120m	0	7	74-367N	DL16h
75	74LS367FC		NIV	3S	6	1	TTL	12m	.40		.80	2.0	0.0	5.0	300m	16n	120m	0	7	54-367W	F16-3
76	74LS367PC		NIV	3S	6	1	TTL	12m	.40		.80	2.0	0.0	5.0	300m	16n	120m	0	7	74-367N	DL16ak
77	7407FC		NIV	OC	6	1	TTL	16m	.40	5.0	.80	2.0	0.0	5.0	400m	30n	205m	0	7	54-07W	TO86
78	7417FC		NIV	OC	6	1	TTL	16m	.40	15	.80	2.0	0.0	5.0	400m	30n	205m	0	7	54-07W	TO86
79	MC5407L		NIV	OC	6	1	TTL	16m	.40	30	.40	2.4	0.0	5.0		26n	145m	5	C	74-07N	TO116
80	MC5417L		NIV	OC	6	1	TTL	16m	.40	15	.40	2.4	0.0	5.0		26n	145m	5	C	74-07N	TO116
81	MC7407L		NIV	OC	6	1	TTL	16m	.40	30	.40	2.4	0.0	5.0		26n	145m	0	7	74-07N	TO116
82	MC7407P		NIV	OC	6	1	TTL	16m	.40	30	.40	2.4	0.0	5.0		26n	145m	0	7	74-07N	TO116
83	MC7417L		NIV	OC	6	1	TTL	16m	.40	15	.40	2.4	0.0	5.0		26n	145m	0	7	74-07N	TO116
84	MC7417P		NIV	OC	6	1	TTL	16m	.40	15	.40	2.4	0.0	5.0		26n	145m	0	7	74-07N	TO116
85	MIC5407J		NIV	OC	6	1	TTL	16m	.40	30	.80	2.0	0.0	5.0	400m	30n	205m	5	C	74-07N	DL14bg
86	MIC5417J		NIV	OC	6	1	TTL	16m	.40	15	.80	2.0	0.0	5.0	400m	30n	205m	5	C	74-07N	DL14bg
87	MIC7407J		NIV	OC	6	1	TTL	16m	.40	30	.80	2.0	0.0	5.0	400m	30n	205m	0	7	74-07N	DL14bg
88	MIC7407N		NIV	OC	6	1	TTL	16m	.40	30	.80	2.0	0.0	5.0	400m	30n	205m	0	7	74-07N	D14-8c
89	MIC7417J		NIV	OC	6	1	TTL	16m	.40	15	.80	2.0	0.0	5.0	440m	30n	205m	0	7	74-07N	DL14bg
90	MIC7417N		NIV	OC	6	1	TTL	16m	.40	15	.80	2.0	0.0	5.0	400m	30n	205m	0	7	74-07N	D14-8c
91	S54365AR		NIV	3S	6	1	TTL	32m	.40		0.8	2.0	0.0	5.0		22n	425m	5	C	54-365W	F16-4
92	S54367AR		NIV	3S	6	1	TTL	32m	.40		0.8	2.0	0.0	5.0		22n	425m	5	C	54-367W	F16-4
93	SMC7407N		NIV	OC	6	1	TTL	16m	.40	5.0	.80	2.0	0.0	5.0	400m	30n	205m	0	7	74-07N	DL14ak
94	SN54LS365AW		NIV	3S	6	1	TTL	12m	.40	5.5	.70	2.0	0.0	5.0	300m	16n	120m	5	C	54-365W	F16-14
95	SN54LS367AW		NIV	3S	6	1	TTL	12m	.40	5.5	.70	2.0	0.0	5.0	300m	16n	120m	5	C	54-367W	F16-14
96	TL7407N		NIV	OC	6	1	TTL	16m	.40	5.5	.80	2.0	0.0	5.0	1.0	30n	205m	0	7	74-07N	DLØ
97	TL7417N		NIV	OC	6	1	TTL	16m	.40	5.5	.80	2.0	0.0	5.0	1.0	30n	205m	0	7	74-07N	DLØ
98	74LS365AFC		NIV	3S	6	1	TTL	24m	.50		.80	2.0	0.0	5.0	300m	22n	120m	0	7	AA12a	F16-3
99	74LS365J		NIV	3S	6	1	TTL	24m	.50	5.2	.80	2.0	0.0	5.0	400m	15n	120m	0	7	74-365N	DL16w
100	74LS365W		NIV	3S	6	1	TTL	24m	.50	5.2	.80	2.0	0.0	5.0	400m	15n	120m	0	7	54-365W	F16-3b
101	74LS367AFC		NIV	3S	6	1	TTL	24m	.50		.80	2.0	0.0	5.0	300m	22n	120m	0	7	54-367W	F16-3
102	74LS367J		NIV	3S	6	1	TTL	24m	.50	5.2	.80	2.0	0.0	5.0	400m	15n	120m	0	7	74-367N	DL16w
103	74LS367W		NIV	3S	6	1	TTL	24m	.50	5.2	.80	2.0	0.0	5.0	400m	15n	120m	0	7	54-367W	F16-3b
104	M74LS365P		NIV	3S	6	1	TTL	24m	.50	5.5	.80	2.0	0.0	5.0	1.0	30n	120m	2	7	74-365N	DL16dy
105	M74LS367P		NIV	3S	6	1	TTL	24m	.50	5.5	.80	2.0	0.0	5.0	1.0	30n	120m	2	7	74-367N	DL16dy
106	N8T95B		NIV	3S	6	1	TTL	48m	.50		.80	2.0	0.0	5.0	300m	13n	325m	0	7	74-365N	DL16be
107	N8T97B		NIV	3S	6	1	TTL	48m	.50		.80	2.0	0.0	5.0	300m	13n	325m	0	7	74-367N	DL16be
108	SN74LS365AW		NIV	3S	6	1	TTL	24m	.50	5.5	.80	2.0	0.0	5.0	300m	16n	120m	0	7	54-365W	F16-14
109	SN74LS367AW		NIV	3S	6	1	TTL	24m	.50	5.5	.80	2.0	0.0	5.0	300m	16n	120m	0	7	54-367W	F16-14
110	XC8T95L		NIV	3S	6	1	TTL	48m	.50		.80	2.0	0.0	.25		12n	514m	0	7	74-365N	DL16d

SYMBOLS AND CODES EXPLAINED IN INTERPRETER

2. LOGIC BUFFERS/DRIVERS

IN ORDER OF: (1)TECH (2) BASIC LOGIC (3)CKTS/DEV (4)MAX OUTP VOLT & (5)TYPE NO.

LINE No.	5 TYPE NUMBER	DATA SHT.	FNC CODE 2 BAS LOG	FNC CODE OUTP CONP	ORG. 3 CKT PER DEV	ORG. LIGP	1 TECH	MIN OUTPUT CURRENT (A)	MIN OUTPUT CURRENT ° OUT (V)	4 MAX OUTP. VOLT. (V)	INPUT LOGIC LEVELS MAX '0' (V)	INPUT LOGIC LEVELS MIN '1' (V)	RATED PWR SUP SPAN NEG (V)	RATED PWR SUP SPAN POS (V)	MAX NOISE IMMUN-ITY (V)	MAX PROP. DELAY tpd (S)	MAX OPER POWER DISS (W)	OPER TEMP RANGE CODE -	OPER TEMP RANGE CODE +	DRAWINGS LOGIC OR BLOCK	DRAWINGS OUTLINE Δ=MO
1	XC8T95P		NIV	3S	6	1	TTL	48m	.50		.80	2.0	0.0	.25		12n	514m	0	7	74-365N	DL16ad
2	XC8T97L		NIV	3S	6	1	TTL	48m	.50		.80	2.0	0.0	.25	300m	12n	514m	0	7	74-365N	DL16d
3	XC8T97P		NIV	3S	6	1	TTL	48m	.50		.80	2.0	0.0	.25	300m	12n	514m	0	7	74-365N	DL16ad
4	ITT5407J		NIV	OC	6	1	TTL	30m	.70	30	.80	2.0	0.0	5.0	400m	10n	150m	5	C	AA92	D14-1d
5	ITT5417J		NIV	OC	6	1	TTL	30m	.70	15	.80	2.0	0.0	5.0	400m	10n	150m	5	C	AA92	D14-1d
6	ITT7407J		NIV	OC	6	1	TTL	40m	.70	30	.80	2.0	0.0	5.0	400m	10n	150m	0	7	AA92	D14-1d
7	ITT7407N		NIV	OC	6	1	TTL	40m	.70	30	.80	2.0	0.0	5.0	400m	10n	150m	0	7	AA92	DL14d
8	ITT7417J		NIV	OC	6	1	TTL	40m	.70	15	.80	2.0	0.0	5.0	400m	10n	150m	0	7	AA92	D14-1d
9	ITT7417N		NIV	OC	6	1	TTL	40m	.70	15	.80	2.0	0.0	5.0	400m	10n	150m	0	7	AA92	DL14d
10	SFC407E		NIV	OC	6	1	TTL	40m	.70	30	.80	2.0	0.0	5.0	400m	30n	205m	0	7	74-07N	TO116
11	SFC407EM		NIV	OC	6	1	TTL	30m	.70	30	.80	2.0	0.0	5.0	400m	30n	205m	5	C	74-07N	TO116
12	SFC407ET		NIV	OC	6	1	TTL	30m	.70	30	.80	2.0	0.0	5.0	400m	30n	205m	2	8	74-07N	TO116
13	SFC407JM		NIV	OC	6	1	TTL	30m	.70	30	.80	2.0	0.0	5.0	400m	30n	205m	5	C	74-07N	TO116
14	SFC407KM		NIV	OC	6	1	TTL	30m	.70	30	.80	2.0	0.0	5.0	400m	30n	205m	5	C	74-07N	TO116
15	SFC407PM		NIV	OC	6	1	TTL	30m	.70	30	.80	2.0	0.0	5.0	400m	30n	205m	5	C	54-07W	TO85
16	SFC417E		NIV	OC	6	1	TTL	40m	.70	15	.80	2.0	0.0	5.0	400m	30n	205m	0	7	74-07N	TO116
17	SFC417EM		NIV	OC	6	1	TTL	30m	.70	15	.80	2.0	0.0	5.0	400m	30n	205m	5	C	74-07N	TO116
18	SFC417ET		NIV	OC	6	1	TTL	30m	.70	15	.80	2.0	0.0	5.0	400m	30n	205m	2	8	74-07N	TO116
19	SFC417KM		NIV	OC	6	1	TTL	30m	.70	15	.80	2.0	0.0	5.0	400m	30n	205m	5	C	74-07N	TO116
20	SFC417PM		NIV	OC	6	1	TTL	30m	.70	15	.80	2.0	0.0	5.0	400m	30n	205m	5	C	54-07W	TO85
21	54LS28CH		NOR	TP	4	2	TTL	12m	.40		.70	2.0	0.0	5.0	300m	14n	60m	5	C	74-02N	CHØ
22	54LS28J		NOR	TP	4	2	TTL	12m	.40		.70	2.0	0.0	5.0	300m	14n	60m	5	C	74-02N	DL14aq
23	54LS28W		NOR	TP	4	2	TTL	12m	.40		.70	2.0	0.0	5.0	300m	14n	60m	5	C	54S02W	F14-9
24	54LS33CH		NOR	OC	4	2	TTL	12m	.40	7.0	.70	2.0	0.0	5.0	300m	25n	69m	5	C	74-02N	CHØ
25	54LS33J		NOR	OC	4	2	TTL	12m	.40	7.0	.70	2.0	0.0	5.0	300m	25n	69m	5	C	74-33N	DL14aq
26	54LS33W		NOR	OC	4	2	TTL	12m	.40	7.0	.70	2.0	0.0	5.0	300m	25n	69m	5	C	54-33W	F14-9
27	MIC5428J		NOR	TP	4	2	TTL	48m	.40	5.5	.80	2.0	0.0	5.0	400m	15n	280m	5	C	74-02N	DL14bg
28	MIC5433AJ		NOR	OC	4	2	TTL	48m	.40	15	.80	2.0	0.0	5.0	400m	23n	260m	5	C	74-33N	DL14bg
29	MIC5433J		NOR	OC	4	2	TTL	48m	.40	5.5	.80	2.0	0.0	5.0	400m	23n	260m	5	C	74-33N	DL14bg
30	MIC7428J		NOR	TP	4	2	TTL	48m	.40	5.5	.80	2.0	0.0	5.0	400m	15n	280m	0	7	74-02N	DL14bg
31	MIC7428N		NOR	TP	4	2	TTL	48m	.40	5.5	.80	2.0	0.0	5.0	400m	15n	280m	0	7	74-02N	D14-8c
32	MIC7433AJ		NOR	OC	4	2	TTL	48m	.40	15	.80	2.0	0.0	5.0	400m	23n	260m	0	7	74-33N	DL14bg
33	MIC7433AN		NOR	OC	4	2	TTL	48m	.40	15	.80	2.0	0.0	5.0	400m	23n	260m	0	7	74-33N	D14-8c
34	MIC7433J		NOR	OC	4	2	TTL	48m	.40	5.5	.80	2.0	0.0	5.0	400m	23n	260m	0	7	74-33N	DL14bg
35	MIC7433N		NOR	OC	4	2	TTL	48m	.40	5.5	.80	2.0	0.0	5.0	400m	23n	260m	0	7	74-33N	D14-8c
36	74LS28FC		NOR	TP	4	2	TTL	24m	.50	5.0	.80	2.0	0.0	5.0	300m	20n	69m	0	7	54S02W	TO86
37	74LS28J		NOR	TP	4	2	TTL	22m	.50	5.2	.80	2.0	0.0	5.0	400m	15n	69m	0	7	74-02N	DL14ak
38	74LS28W		NOR	TP	4	2	TTL	22m	.50	5.2	.80	2.0	0.0	5.0	400m	15n	69m	0	7	54S02W	F14-13
39	74LS33J		NOR	OC	4	2	TTL	24m	.50	5.2	.80	2.0	0.0	5.0	400m	30n	18m	0	7	74-33N	DL14ak
40	74LS33W		NOR	OC	4	2	TTL	24m	.50	5.2	.80	2.0	0.0	5.0	400m	30n	18m	0	7	54-33W	F14-13
41	SN74LS28W		NOR	TP	4	2	TTL	24m	.50	5.5	.80	2.0	0.0	5.0	300m	24n	69m	0	7	54S02W	F14-18
42	SFC432E		OR	TP	4	2	TTL	16m	.40		.80	2.0	0.0	5.0	400m	22n	190m	0	7	AA57	TO116
43	SFC432EM		OR	TP	4	2	TTL	16m	.40		.80	2.0	0.0	5.0	400m	22n	190m	5	C	AA57	TO116
44	SFC432ET		OR	TP	4	2	TTL	16m	.40		.80	2.0	0.0	5.0	400m	22n	190m	2	8	AA57	TO116
45	SFC432JM		OR	TP	4	2	TTL	16m	.40		.80	2.0	0.0	5.0	400m	22n	190m	5	C	AA57	TO116
46	SFC432KM		OR	TP	4	2	TTL	16m	.40		.80	2.0	0.0	5.0	400m	22n	190m	5	C	AA57	TO116
47	SFC432PM		OR	TP	4	2	TTL	16m	.40		.80	2.0	0.0	5.0	400m	22n	190m	5	C	AA57	TO85
48	SFC417JM		OR	OC	6	1	TTL	30m	.70	15	.80	2.0	0.0	5.0	400m	30n	205m	5	C	74-07N	TO116

SYMBOLS AND CODES EXPLAINED IN INTERPRETER

3. LINE DRIVERS/TRANSMITTERS

IN ORDER OF: (1)TECH (2)OUTPUT MODE (3)DEV CKTS (4)TYP OUTP VOLT & (5)TYPE NO.

LINE No.	5 TYPE NUMBER	DATA SHT.	2 OMUOTDPE	3 DCEKVTS	TYP OUTPUT VOLTAGE 4 HIGH (V)	LOW (V)	MIN OUTPUT SINK CURRENT (A)	° OUT (V)	MAX OUTP RESIS (Ω)	1 TECH	INPUT LOGIC LEVELS MAX '0' (V)	MIN '1' (V)	RATED PWR SUPPLY SPAN NEG (V)	POS (V)	MAX PROP. DELAY tpd (S)	MAX OPER. POWER DISS (W)	OPER. TEMP. RANGE CODE -	+	DRAWINGS LOGIC OR BLOCK	OUTLINE Δ=MO
1	CM1150		S	2	6.7	-6.7	20 m	0.0	100		.80	2.4	12	12	20n	800m	0	7	AB1	TO116
2	CM1151		S	2	6.7	-6.7	20 m	0.0	100		.80	2.4	12	12	20n	800m	0	7	AB1	TO116
3	HD1-6433-2		S	4	4.6	.40	6.0m	.40		CMS	1.0	3.5	0.0	5.0	50n	50u	5	C	AB75	DL16cn
4	HD1-6433-9		S	4	4.6	.40	6.0m	.40		CMS	1.0	3.5	0.0	5.0	50n	50u	4	8	AB75	DL16cn
5	HD3-6433-2		S	4	4.6	.40	6.0m	.40		CMS	1.0	3.5	0.0	5.0	50n	50u	5	C	AB75	DL16dv
6	HD3-6433-9		S	4	4.6	.40	6.0m	.40		CMS	1.0	3.5	0.0	5.0	50n	50u	4	8	AB75	DL16dv
7	HD9-6433-2		S	4	4.6	.40	6.0m	.40		CMS	1.0	3.5	0.0	5.0	50n	50u	5	C	AB75	F16-13
8	HD9-6433-9		S	4	4.6	.40	6.0m	.40		CMS	1.0	3.5	0.0	5.0	50n	50u	4	8	AB75	F16-13
9	HD1-6433A-2		S	4	9.6	.40	12 m	.40		CMS	2.0	7.0	0.0	10	30n	1.0m	5	C	AB75	DL16cn
10	HD1-6433A-9		S	4	9.6	.40	12 m	.40		CMS	2.0	7.0	0.0	10	30n	1.0m	4	8	AB75	DL16cn
11	HD3-6433A-2		S	4	9.6	.40	12 m	.40		CMS	2.0	7.0	0.0	10	30n	1.0m	5	C	AB75	DL16dv
12	HD3-6433A-9		S	4	9.6	.40	12 m	.40		CMS	2.0	7.0	0.0	10	30n	1.0m	4	8	AB75	DL16dv
13	HD9-6433A-2		S	4	9.6	.40	12 m	.40		CMS	2.0	7.0	0.0	10	30n	1.0m	5	C	AB75	F16-13
14	HD9-6433A-9		S	4	9.6	.40	12 m	.40		CMS	2.0	7.0	0.0	10	30n	1.0m	4	8	AB75	F16-13
15	HD1-6431-2		S	6	4.6	.40	6.0m	.40		CMS	1.0	3.5	0.0	5.0	75n	50u	5	C	AB73	DL16cn
16	HD1-6431-9		S	6	4.6	.40	6.0m	.40		CMS	1.0	3.5	0.0	5.0	75n	50u	4	8	AB73	DL16cn
17	HD1-6432-2		S	6	4.6	.40	6.0m	.40		CMS	1.0	3.5	0.0	5.0	55n	50u	5	C	AB74	DL18q
18	HD1-6432-9		S	6	4.6	.40	6.0m	.40		CMS	1.0	3.5	0.0	5.0	55n	50u	4	8	AB74	DL18q
19	HD3-6431-2		S	6	4.6	.40	6.0m	.40		CMS	1.0	3.5	0.0	5.0	75n	50u	5	C	AB73	DL16dv
20	HD3-6431-9		S	6	4.6	.40	6.0m	.40		CMS	1.0	3.5	0.0	5.0	75n	50u	4	8	AB73	DL16dv
21	HD3-6432-2		S	6	4.6	.40	6.0m	.40		CMS	1.0	3.5	0.0	5.0	55n	50u	5	C	AB74	DL18g
22	HD3-6432-9		S	6	4.6	.40	6.0m	.40		CMS	1.0	3.5	0.0	5.0	55n	50u	4	8	AB74	DL18g
23	HD9-6431-2		S	6	4.6	.40	6.0m	.40		CMS	1.0	3.5	0.0	5.0	75n	50u	5	C	AB73	F16-13
24	HD9-6431-9		S	6	4.6	.40	6.0m	.40		CMS	1.0	3.5	0.0	5.0	75n	50u	4	8	AB73	F16-13
25	HD9-6432-2		S	6	4.6	.40	6.0m	.40		CMS	1.0	3.5	0.0	5.0	55n	50u	5	C	AB74	F18-1
26	HD9-6432-9		S	6	4.6	.40	6.0m	.40		CMS	1.0	3.5	0.0	5.0	55n	50u	4	8	AB74	F18-1
27	HD1-6431A-2		S	6	9.6	.40	12 m	.40		CMS	2.0	7.0	0.0	10	45n	1.0m	5	C	AB73	DL16cn
28	HD1-6431A-9		S	6	9.6	.40	12 m	.40		CMS	2.0	7.0	0.0	10	45n	1.0m	4	8	AB73	DL16cn
29	HD1-6432A-2		S	6	9.6	.40	12 m	.40		CMS	2.0	7.0	0.0	10	45n	1.0m	5	C	AB74	DL18q
30	HD1-6432A-9		S	6	9.6	.40	12 m	.40		CMS	2.0	7.0	0.0	10	45n	1.0m	4	8	AB74	DL18g
31	HD3-6431A-2		S	6	9.6	.40	12 m	.40		CMS	2.0	7.0	0.0	10	45n	1.0m	5	C	AB73	DL16dv
32	HD3-6431A-9		S	6	9.6	.40	12 m	.40		CMS	2.0	7.0	0.0	10	45n	1.0m	4	8	AB73	DL16dv
33	HD3-6432A-2		S	6	9.6	.40	12 m	.40		CMS	2.0	7.0	0.0	10	45n	1.0m	5	C	AB74	DL18g
34	HD3-6432A-9		S	6	9.6	.40	12 m	.40		CMS	2.0	7.0	0.0	10	45n	1.0m	4	8	AB74	DL18g
35	HD9-6431A-2		S	6	9.6	.40	12 m	.40		CMS	2.0	7.0	0.0	10	45n	1.0m	5	C	AB73	F16-13
36	HD9-6431A-9		S	6	9.6	.40	12 m	.40		CMS	2.0	7.0	0.0	10	45n	1.0m	4	8	AB73	F16-13
37	HD9-6432A-2		S	6	9.6	.40	12 m	.40		CMS	2.0	7.0	0.0	10	45n	1.0m	5	C	AB74	F18-1
38	HD9-6432A-9		S	6	9.6	.40	12 m	.40		CMS	2.0	7.0	0.0	10	45n	1.0m	4	8	AB74	F18-1
39	54SC240C		S	8	2.4	0.4	24m			CMS	0.8	2.0	0.0	5.0	36n	500m	5	C	74S240N	DL20ag
40	54SC241C		S	8	2.4	0.4	24m			CMS	0.8	2.0	0.0	5.0	36n	500m	5	C	74S241N	DL20ag
41	54SC244C		S	8	2.4	0.4	24m			CMS	0.8	2.0	0.0	5.0	36n	500m	5	C	74LS244N	DL20ag
42	54SC540C		S	8	2.4	0.4	24m			CMS	0.8	2.0	0.0	5.0	36n	500m	5	C	74LS540N	DL20ag
43	54SC541C		S	8	2.4	0.4	24m			CMS	0.8	2.0	0.0	5.0	36n	500m	5	C	74LS541N	DL20ag
44	H74SC240C		S	8	2.4	0.4	24m			CMS	0.8	2.0	0.0	5.0	18n	500m	0	7	74S240N	DL20ag
45	H74SC240D		S	8	2.4	0.4	24m			CMS	0.8	2.0	0.0	5.0	18n	500m	0	7	74S240N	DL20af
46	H74SC240P		S	8	2.4	0.4	24m			CMS	0.8	2.0	0.0	5.0	18n	500m	0	7	74S240N	DL20ae
47	H74SC241C		S	8	2.4	0.4	24m			CMS	0.8	2.0	0.0	5.0	18n	500m	0	7	74S241N	DL20ag
48	H74SC241D		S	8	2.4	0.4	24m			CMS	0.8	2.0	0.0	5.0	18n	500m	0	7	74S241N	DL20af
49	H74SC241P		S	8	2.4	0.4	24m			CMS	0.8	2.0	0.0	5.0	18n	500m	0	7	74S241N	DL20ae
50	H74SC244C		S	8	2.4	0.4	24m			CMS	0.8	2.0	0.0	5.0	18n	500m	0	7	74LS244N	DL20ag
51	H74SC244D		S	8	2.4	0.4	24m			CMS	0.8	2.0	0.0	5.0	18n	500m	0	7	74LS244N	DL20af
52	H74SC244P		S	8	2.4	0.4	24m			CMS	0.8	2.0	0.0	5.0	18n	500m	0	7	74LS244N	DL20ae
53	H74SC540C		S	8	2.4	0.4	24m			CMS	0.8	2.0	0.0	5.0	18n	500m	0	7	74LS540N	DL20ag
54	H74SC540D		S	8	2.4	0.4	24m			CMS	0.8	2.0	0.0	5.0	18n	500m	0	7	74LS540N	DL20af
55	H74SC540P		S	8	2.4	0.4	24m			CMS	0.8	2.0	0.0	5.0	18n	500m	0	7	74LS540N	DL20ae
56	H74SC541C		S	8	2.4	0.4	24m			CMS	0.8	2.0	0.0	5.0	18n	500m	0	7	74LS541N	DL20ag
57	H74SC541D		S	8	2.4	0.4	24m			CMS	0.8	2.0	0.0	5.0	18n	500m	0	7	74LS541N	DL20af
58	H74SC541P		S	8	2.4	0.4	24m			CMS	0.8	2.0	0.0	5.0	18n	500m	0	7	74LS541N	DL20ae
59	MC75113L		D	1	.02	-.02	18 m		50	DTL	4.0	8.0	8.0	8.0	30n	488m	0	7	AB22	TO116
60	uA55110APC		D	2						DTL	0.8	2.0	5.0	5.0	25n	1.7	0	7	AB24	DL14bn
61	ITT1488-1J		S	4	7.0	-7.0	6.0m	0.0	300	DTL	.80	1.9	9.0	9.0	350n	333m	5	C	AB9	D14-1d
62	ITT1488-5J		S	4	7.0	-7.0	6.0m	0.0	300	DTL	.80	1.9	9.0	9.0	350n	333m	0	7	AB9	D14-1d
63	10192FC		D	4	-.96	-2.4	20 m	-.96	50	ECL	-1.4	-1.1	5.2	0.0	6.0n	728m	0	7	AB59	F16-3
64	10192PC		D	4	-.96	-2.4	20 m	-.96	50	ECL	-1.4	-1.1	5.2	0.0	6.0n	728m	0	7	AB59	DL16ak
65	MC10128L#1		S	2	2.5	.50	50 m	2.5		ECL	-1.8	-.81	5.2	5.0	20n	504m	3	8	AB20	DL16e
66	MC10128L#2		S	2	3.11	.15	59 m	3.1		ECL	-1.8	-.81	5.2	6.0	23n	504m	3	8	AB20	DL16e
67	HD102120		S	2	7	0	15 m	0.0		ECL	.15	3.1	5.2	0.0	15n		0	7		
68	10123FC		S	3	-.96	-2.0	20 m	-.96	25	ECL	-1.4	-1.1	5.2	0.0	4.4n	390m	0	7	AB58	F16-3
69	10123PC		S	3	-.96	-2.0	20 m	-.96	25	ECL	-1.4	-1.1	5.2	0.0	4.4n	390m	0	7	AB58	DL16ak
70	SP721BE		D	1	.02	-.02	8.0m	.80	100	TTL	.80	2.0	5.0	5.0	15n	225m	0	7	AB27	DL14bf
71	SP721BF		D	1	.02	-.02	8.0m	.80	100	TTL	.80	2.0	5.0	5.0	15n	225m	0	7	AB27	F10-1
72	SP721BT		D	1	.02	-.02	8.0m	.80	100	TTL	.80	2.0	5.0	5.0	15n	225m	0	7	AB27	CN8
73	MC75109L		D	2	.006	0.0	3.5m		50	TTL	.80	2.0	5.0	5.0	25n	150m	0	7	AB3	TO116
74	MC75109P		D	2	.006	0.0	3.5m		50	TTL	.80	2.0	5.0	5.0	25n	150m	0	7	AB3	DL14be
75	MC75110L		D	2	.012	0.0	6.5m		50	TTL	.80	2.0	5.0	5.0	25n	250m	0	7	AB3	TO116
76	SFC5109E		D	2	.03	0.0	3.5m		50	TTL	.80	2.0	5.0	5.0	25n	250m	0	7	AB24	TO116
77	SFC5109EM		D	2	.03	0.0	3.5m		50	TTL	.80	2.0	5.0	5.0	25n	250m	5	C	AB24	TO116
78	SFC5109JM		D	2	.03	0.0	3.5m		50	TTL	.80	2.0	5.0	5.0	25n	250m	5	C	AB24	TO116
79	SFC5109KM		D	2	.03	0.0	3.5m		50	TTL	.80	2.0	5.0	5.0	25n	250m	5	C	AB24	TO116
80	SFC5110E		D	2	.06	0.0	6.5m		50	TTL	.80	2.0	5.0	5.0	25n	250m	0	7	AB24	TO116
81	SFC5110EM		D	2	.06	0.0	6.5m		50	TTL	.80	2.0	5.0	5.0	25n	250m	5	C	AB24	TO116
82	SFC5110JM		D	2	.06	0.0	6.5m		50	TTL	.80	2.0	5.0	5.0	25n	250m	5	C	AB24	TO116
83	SFC5110KM		D	2	.06	0.0	6.5m		50	TTL	.80	2.0	5.0	5.0	25n	250m	5	C	AB24	TO116
84	55121DM		D	2	2.4		220m	1.5		TTL	.80	2.0	0.0	5.0	50n	300m	5	C	AB3	DL16h
85	55121FM		D	2	2.4		220m	1.5		TTL	.80	2.0	0.0	5.0	50n	300m	5	C	AB3	F16-3
86	75121DC		D	2	2.4		220m	1.5		TTL	.80	2.0	0.0	5.0	50n	300m	0	7	AB3	DL16h
87	75121PC		D	2	2.4		220m	1.5		TTL	.80	2.0	0.0	5.0	50n	300m	0	7	AB3	DL16ak
88	DS1691W		D	2	2.4	-2.4			100	TTL	.80	2.0	5.5	5.5	300n	150m	5	C	AB84	F16-1
89	ITT7141		D	2	2.5	.40	100m	.70	100	TTL	.80	2.0	0.0	5.0	25n	170m	0	7	AB53	TO116
90	9612EHC		D	2	2.6	.25	50 m	.40		TTL	.80	2.0	0.0	5.0	20n	250m	0	7	AB29	TO99
91	9612ERC		D	2	2.6	.25	50 m	.40		TTL	.80	2.0	0.0	5.0	20n	250m	0	7	AB29	DL8f
92	9612ETC		D	2	2.6	.25	50 m	.40		TTL	.80	2.0	0.0	5.0	20n	250m	0	7	AB29	DL8q
93	DS1692W		D	2	2.6	-2.6			100	TTL	.80	2.0	5.5	5.5	300n	150m	5	C	AB84	F16-1
94	9612AHM		D	2	2.75	.20	40 m	.40		TTL	.80	2.0	0.0	5.0	30n	250m	5	C	AB29	TO99
95	9612ARM		D	2	2.75	.20	40 m	.40		TTL	.80	2.0	0.0	5.0	20n	250m	5	C	AB29	DL8f
96	9612HC		D	2	2.75	.20	40 m	.40		TTL	.80	2.0	0.0	5.0	30n	250m	0	7	AB29	TO99
97	9612RC		D	2	2.75	.20	40 m	.40		TTL	.80	2.0	0.0	5.0	30n	250m	0	7	AB29	DL8f
98	9612TC		D	2	2.75	.20	40 m	.40		TTL	.80	2.0	0.0	5.0	30n	250m	0	7	AB29	DL8q
99	74S140FC		D	2	2.8	.50	60 m	.50	50	TTL	.80	2.0	0.0	5.0	6.5n	220m	0	7	54-13W	TO86
100	75123DC		D	2	3.11	.15	225m	3.4		TTL	.80	2.0	0.0	5.0	35n	300m	0	7	AB3	DL16h
101	75123PC		D	2	3.11	.15	225m	3.4		TTL	.80	2.0	0.0	5.0	35n	300m	0	7	AB3	DL16ak
102	ITT9614-1J		D	2	3.2	.20	40 m	.40	100	TTL	.90	1.7	0.0	5.0	20n	250m	5	C	AB6	D16-2d
103	ITT9614-5J		D	2	3.2	.20	40 m	.45	100	TTL	.85	1.8	0.0	5.0	30n	250m	0	7	AB6	D16-2d
104	DS7830W		D	2	3.3	.20	40 m	.50		TTL	.80	2.0	0.0	5.0	12n	90m	5	C	AB7	F14-5
105	DS8830W		D	2	3.3	.20	40 m	.50		TTL	.80	2.0	0.0	5.0	12n	90m	0	7	AB7	F14-5
106	9634DC		D	2	3.5	.50	50 m	.50	50	TTL	.80	2.0	0.0	5.0	15n	345m	0	7	AB81	DL16h
107	9634DM		D	2	3.5	.50	50 m	.50	50	TTL	.70	2.0	0.0	5.0	15n	345m	5	C	AB81	DL16h
108	9634FM		D	2	3.5	.50	50 m	.50	50	TTL	.70	2.0	0.0	5.0	15n	345m	5	C	AB81	F16-3
109	9634PC		D	2	3.5	.50	50 m	.50	50	TTL	.80	2.0	0.0	5.0	15n	345m	0	7	AB81	DL16ak
110	55109DM		D	2	10	-3.0	6.0m			TTL	.80	2.0	5.0	5.0	25n	300m	5	C	AB2	DL14ao

SYMBOLS AND CODES EXPLAINED IN INTERPRETER

3. LINE DRIVERS/TRANSMITTERS

IN ORDER OF: (1)TECH (2)OUTPUT MODE (3)DEV CKTS (4)TYP OUTP VOLT & (5)TYPE NO.

LINE No.	5 TYPE NUMBER	DATA SHT.	2 OMUOTDPE	3 DCEKVTS	TYP OUTPUT VOLTAGE 4 HIGH (V)	LOW (V)	MIN OUTPUT SINK CURRENT (A)	° OUT (V)	MAX OUTP RESIS (Ω)	1 TECH	INPUT LOGIC LEVELS MAX '0' (V)	MIN '1' (V)	RATED PWR SUPPLY SPAN NEG (V)	POS (V)	MAX PROP. DELAY tpd (S)	MAX OPER. POWER DISS (W)	OPER. TEMP. RANGE CODE -	+	DRAWINGS LOGIC OR BLOCK	OUTLINE Δ=MO
1	55109FM		D	2	10	-3.0	12 m			TTL	.80	2.0	5.0	5.0	25n	325m	5	C	AB2	TO86
2	55110ADM		D	2	10	-3.0	12 m	10	50	TTL	.80	2.0	5.0	5.0	25n	900m	5	C	75-109	DL14ao
3	55110DM		D	2	10	-3.0	12 m			TTL	.80	2.0	5.0	5.0	25n	325m	5	C	AB2	DL14ao
4	55110FM		D	2	10	-3.0	12 m			TTL	.80	2.0	5.0	5.0	25n	325m	5	C	AB2	TO86
5	75109DC		D	2	10	-3.0	6.0m			TTL	.80	2.0	5.0	5.0	25n	300m	0	7	AB2	DL14ao
6	75109PC		D	2	10	-3.0	6.0m			TTL	.80	2.0	5.0	5.0	25n	300m	0	7	AB2	DL14bn
7	75110DC		D	2	10	-3.0	12 m			TTL	.80	2.0	5.0	5.0	25n	325m	0	7	AB2	DL14ao
8	75110PC		D	2	10	-3.0	12 m			TTL	.80	2.0	5.0	5.0	25n	325m	0	7	AB2	DL14bn
9	75112DC		D	2	10	-3.0	27 m	10	50	TTL	.80	2.0	5.0	5.0	25n	900m	0	7	AB24	DL14ao
10	75112PC		D	2	10	-3.0	27 m	10	50	TTL	.80	2.0	5.0	5.0	25n	1.7	0	7	AB24	DL14bn
11	DS55109J		D	2	10	-3.0	6.0m			TTL	.40	2.0	5.0	5.0	25n	300m	5	C	75-109	DL14an
12	DS55110J		D	2	10	-3.0	6.0m			TTL	.40	2.0	5.0	5.0	25n	300m	5	C	AB2	DL14an
13	DS75109J		D	2	10	-3.0	6.0m			TTL	.40	2.0	5.0	5.0	25n	300m	0	7	AB2	DL14an
14	DS75109N		D	2	10	-3.0	6.0m			TTL	.40	2.0	5.0	5.0	25n	300m	0	7	AB2	DL14o
15	DS75110J		D	2	10	-3.0	6.0m			TTL	.40	2.0	5.0	5.0	25n	300m	0	7	AB2	DL14an
16	DS75110N		D	2	10	-3.0	6.0m			TTL	.40	2.0	5.0	5.0	25n	300m	0	7	AB2	DL14o
17	HEPC0900P-RT		D	2	12	1.5	36 m	1.5		TTL	6.5	8.5	0.0	15	140n	180m	3	7	AA1	TO116
18	HD1-245		D	3	.50	-30	2.3m	0.0		TTL	0.0	3.2	0.0	5.0	10n	93m	5	C	AB32	DL14r
19	HD1-545		D	3	.50	-30	1.9m	0.0		TTL	0.0	3.2	0.0	5.0	10n	120m	0	7	AB32	DL14r
20	HD9-245		D	3	.50	-30	2.3m	0.0		TTL	0.0	3.2	0.0	5.0	10n	93m	5	C	AB32	TO86
21	HD9-545		D	3	.50	-30	1.9m	0.0		TTL	0.0	3.2	0.0	5.0	10n	120m	0	7	AB32	TO86
22	8T100		D	4	3.0	0.0	40 m	.50		TTL			0.0	5.0			0	7	AB56	DLØ
23	8T101		D	4	3.0	0.0	40 m	.50		TTL			0.0	5.0			0	7	AB56	DLØ
24	DS1688J		D	4	5.5	1.0	100m			TTL	.80	2.0	0.0	5.0	20n	65m	5	C	AB25	DL16g
25	DS3688J		D	4	5.5	1.0	100m			TTL	.80	2.0	0.0	5.0	20n	65m	0	7	AB25	DL16g
26	DS3688N		D	4	5.5	1.0	100m			TTL	.80	2.0	0.0	5.0	20n	65m	0	7	AB25	DL16bv
27	5550		D	8			40 m	.50		TTL	.45	2.0	0.0	5.0	18n	750m	0	7	AB45	PC12
28	DS7831W		DS	2	2.3	.29	40 m	.50		TTL	.80	2.0	0.0	5.0	25n	450m	5	C	AB26	F16-1
29	DS7832W		DS	2	2.3	.29	40 m	.50		TTL	.80	2.0	0.0	5.0	25n	450m	5	C	AB26	F16-1
30	9621DM		DS	2	4.3	.20	20 m	.40		TTL	1.0	2.0	0.0	12	150n	101m	5	C	AB31	DL14ao
31	9621FM		DS	2	4.3	.20	20 m	.40		TTL	1.0	2.0	0.0	12	150n	101m	5	C	AB31	TO86
32	9621DC		DS	2	4.4	.20	20 m	.40		TTL	1.0	2.0	0.0	12	200n	101m	0	7	AB31	DL14ao
33	9621PC		DS	2	4.4	.20	20 m	.40		TTL	1.0	2.0	0.0	12	200n	101m	0	7	AB31	DL14bn
34	9009FC		S	2		.45	42 m	.45		TTL	.80	2.0	0.0	5.0	17n	146m	0	7	54-13W	TO86
35	DS55121W		S	2	2.4		100m	2.0		TTL	.80	2.0	0.0	5.0	50n	300m	5	C	AB3	F16-1
36	uA8T13DC		S	2	2.4	.40	220m	1.5		TTL	.80	2.0	0.0	5.0	20n	315m	0	7	AB3	DL16h
37	uA8T13DM		S	2	2.4	.40	220m	1.5		TTL	.80	2.0	0.0	5.0	20n	315m	5	C	AB3	DL16h
38	uA8T13FM		S	2	2.4	.40	220m	1.5		TTL	.80	2.0	0.0	5.0	20n	315m	5	C	AB3	F16-3
39	uA8T13PC		S	2	2.4	.40	220m	1.5		TTL	.80	2.0	0.0	5.0	20n	315m	0	7	AB3	DL16ak
40	RC8T13DD		S	2	2.8	0.0	75 m	2.8		TTL	.80	2.0	0.0	5.0	20n	315m	0	7	AB3	DL16m
41	RM8T13DD		S	2	2.8	0.0	75 m	2.8		TTL	.80	2.0	0.0	5.0	20n	315m	5	C	AB3	DL16m
42	M5325P		S	2	2.9	.25	54 m	.40		TTL	.40	2.4	0.0	5.0	35n	250m	0	7	AA32c	TO116
43	N8T13B		S	2	3.0	0.0	75 m	2.4		TTL	.80	2.0	0.0	5.0	20n	315m	0	7	AB3	DL16be
44	N8T23B		S	2	3.1	.15	59 m	3.1		TTL	.80	2.0	0.0	5.0	25n	315m	0	7	AB3	DL16be
45	RC8T23DD		S	2	3.11	.15	59 m			TTL	.80	2.0	0.0	5.0	50n	315m	0	7	AB3	DL16m
46	RM8T23DD		S	2	3.11	.15	59 m			TTL	.80	2.0	0.0	5.0	50n	315m	5	C	AB3	DL16m
47	uA8T23DC		S	2	3.11	.15	220m	1.4		TTL	.80	2.0	0.0	5.0	35n	315m	0	7	AB3	DL16h
48	uA8T23PC		S	2	3.11	.15	220m	1.4		TTL	.80	2.0	0.0	5.0	35n	315m	0	7	AB3	DL16ak
49	75150DC		S	2	8.0	-8.0	15 m	0.0	3.0k	TTL	.80	2.0	12	12	60n	444m	0	7	75-150	DL14ao
50	75150PC		S	2	8.0	-8.0	15 m	0.0	3.0k	TTL	.80	2.0	12	12	60n	444m	0	7	75-150	DL14bn
51	75150RC		S	2	8.0	-8.0	15 m	0.0	3.0k	TTL	.80	2.0	12	12	60n	444m	0	7	75-150	DL8f
52	DS75150J		S	2	8.0	-8.0	1.6m	-5.0		TTL	.80	2.0	12	12	60n	504m	0	7	75-150	DL14an
53	DS75150N-8		S	2	8.0	-8.0				TTL	.80	2.0	0.0	12	60n	264m	0	7	AB8	DL8r
54	TSCH50AMJE/883		S	2	12.0	0.4	10m	0.4		TTL	.8	2.0	0	15	235		5	C	AB105	DL16c
55	TSCH50BMJE/883		S	2	12.0	0.4	10m	0.4		TTL	.8	2.0	0	15	235		5	C	AB105	DL16c
56	MC419F		S	3	2.4	.45	30 m	.40	350	TTL	0.0	3.0	0.0	5.0	70n	54m	0	7	AB52	TO86
57	MC419L,P%		S	3	2.4	.45	30 m	.40	350	TTL	0.0	3.0	0.0	5.0	70n	54m	0	7	AB52	TO116
58	MC469F		S	3	2.4	.45	15 m	.40	350	TTL	0.0	3.0	0.0	5.0	70n	54m	0	7	AB52	TO86
59	MC469L,P%		S	3	2.4	.45	15 m	.40	350	TTL	0.0	3.0	0.0	5.0	70n	54m	0	7	AB52	TO116
60	MC519F		S	3	2.4	.45	30 m	.40	350	TTL	0.0	2.8	0.0	5.0	70n	54m	5	C	AB52	TO86
61	MC519L		S	3	2.4	.45	30 m	.40	350	TTL	0.0	2.8	0.0	5.0	70n	54m	5	C	AB52	TO116
62	MC569F		S	3	2.4	.45	15 m	.40	350	TTL	0.0	2.8	0.0	5.0	70n	54m	5	C	AB52	TO86
63	MC569L		S	3	2.4	.45	15 m	.40	350	TTL	0.0	2.8	0.0	5.0	70n	54m	5	C	AB52	TO116
64	9616FM		S	3	6.0	-6.0				TTL	.80	2.0	12	12	320n	360m	5	C	AB30	TO86
65	IM5001CDD		S	4	2.4	.45	120m	.45	39	TTL	.85	1.8	0.0	5.0	25n	1.0	0	7	AB51	DL14ag
66	IM5001MDD		S	4	2.4	.40	120m	.40	39	TTL	.80	2.0	0.0	5.0	25n	1.0	5	C	AB51	DL14ag
67	IM5001NDD		S	4	2.4	.40	120m	.40	39	TTL	.80	2.0	0.0	5.0	25n	1.0	2	7	AB51	DL14ag
68	IM5011CDD		S	4	2.4	.45	120m	.45	56	TTL	.85	1.8	0.0	5.0	25n	1.0	0	7	AB51	DL14ag
69	IM5011MDD		S	4	2.4	.40	120m	.40	56	TTL	.80	2.0	0.0	5.0	25n	1.0	5	C	AB51	DL14ag
70	IM5011NDD		S	4	2.4	.40	120m	.40	56	TTL	.80	2.0	0.0	5.0	25n	1.0	2	7	AB51	DL14ag
71	N8T09A		S	4	2.4	.40	40 m	.40		TTL	.80	2.0	0.0	5.0	20n	340m	0	7	AB55	DL14b
72	DS26LS31MW		S	4	2.5	.50	20 m	.50		TTL	.80	2.0	0.0	5.0	20n	400m	5	C	AB78	F16-1
73	MC2065F		S	4	5.5	.60	60 m	.60		TTL	0.0	2.8	0.0	5.0	30n	105m	0	7	54LS01W	TO86
74	MC2065L,P%		S	4	5.5	.60	60 m	.60		TTL	0.0	2.8	0.0	5.0	30n	105m	0	7	54LS01W	TO116
75	MC2165F		S	4	5.5	.60	60 m	.60		TTL	0.0	2.8	0.0	5.0	30n	105m	5	C	54LS01W	TO86
76	MC2165L		S	4	5.5	.60	60 m	.60		TTL	0.0	2.8	0.0	5.0	30n	105m	5	C	54LS01W	TO116
77	RC1488DB		S	4	7.0	-7.0	6.0m	0.0	300	TTL	.80	1.9	9.0	9.0	350n	333m	0	7	AB9	DL14q
78	RC1488DC		S	4	7.0	-7.0	6.0m	0.0	300	TTL	.80	1.9	9.0	9.0	350n	333m	0	7	AB9	DL14ag
79	54S240DM		S	8	2.0	.55	48 m	.55	90	TTL	.80	2.0	0.0	5.0	7.0n	735m	5	C	74S240N	DL20i
80	54S240FM		S	8	2.0	.55	48 m	.55	90	TTL	.80	2.0	0.0	5.0	7.0n	735m	5	C	54LS240W	TO86
81	54S241DM		S	8	2.0	.55	48 m	.55	90	TTL	.80	2.0	0.0	5.0	9.0n	850m	5	C	AB15a	DL20i
82	54S241FM		S	8	2.0	.55	48 m	.55	90	TTL	.80	2.0	0.0	5.0	9.0n	850m	5	C	AB15a	TO86
83	74LS240FC		S	8	2.0	.40	24 m	.50		TTL	.80	2.0	0.0	5.0	18n	250m	0	7	54LS240W	TO86
84	74LS241FC		S	8	2.0	.40	24 m	.50		TTL	.80	2.0	0.0	5.0	18n	270m	0	7	AB15a	TO86
85	74LS244FC		S	8	2.0	.40	24 m	.50		TTL	.80	2.0	0.0	5.0	18n	270m	0	7	54LS241W	TO86
86	74S240FC		S	8	2.0	.55	64 m	.55	90	TTL	.80	2.0	0.0	5.0	7.0n	750m	0	7	54LS240W	TO86
87	74S241FC		S	8	2.0	.55	64 m	.55	90	TTL	.80	2.0	0.0	5.0	9.0n	900m	0	7	AB15a	TO86
88	SN54ALS241J		S	8	2.0	.25	100m	0.0		TTL	.80	2.0	0.0	5.0	18n		5	C	AB15a	DL20Ø
89	SN54ALS244J		S	8	2.0	.25	100m	0.0		TTL	.80	2.0	0.0	5.0	18n		5	C	74S241N	DL20Ø
90	57S306N		S	8	2.4	.55	48 m	.55		TTL	.80	2.0	0.0	5.0	7.0n	725m	5	C	AB71	DL20g
91	67S306J		S	8	2.4	.55	64 m	.55		TTL	.80	2.0	0.0	5.0	7.0n	750m	0	7	AB71	DL20f
92	67S306N		S	8	2.4	.55	64 m	.55		TTL	.80	2.0	0.0	5.0	7.0n	750m	0	7	AB71	DL20g
93	54LS540DM		S	8	2.5	.40	12 m	.40		TTL	.70	2.0	0.0	5.0	18n	250m	5	C	74LS540N	DL20i
94	54LS540FM		S	8	2.5	.40	12 m	.40		TTL	.70	2.0	0.0	5.0	18n	250m	5	C	54LS540W	TO86
95	54LS541DM		S	8	2.5	.40	12 m	.40		TTL	.70	2.0	0.0	5.0	18n	270m	5	C	74LS541N	DL20i
96	54LS541FM		S	8	2.5	.40	12 m	.40		TTL	.70	2.0	0.0	5.0	18n	270m	5	C	54LS541W	TO86
97	74LS540FC		S	8	2.7	.50	24 m	.50		TTL	.80	2.0	0.0	5.0	18n	250m	0	7	54LS540W	TO86
98	74LS541FC		S	8	2.7	.50	24 m	.50		TTL	.80	2.0	0.0	5.0	18n	270m	0	7	54LS541W	TO86
99	SN74LS540W		S	8	3.1	.25	24 m	.50		TTL	.80	2.0	0.0	5.0	18n	250m	0	7	54LS540W	F20-1
100	SN74LS541W		S	8	3.1	.25	24 m	.50		TTL	.80	2.0	0.0	5.0	18n	270m	0	7	54LS541W	F20-1
101	57LS306N		S	8	3.4	.40	12 m	.40		TTL	.70	2.0	0.0	5.0	18n	295m	5	C	AB71	DL20g
102	67LS306J		S	8	3.4	.40	24 m	.50		TTL	.80	2.0	0.0	5.0	18n	250m	0	7	AB71	DL20f
103	67LS306N		S	8	3.4	.40	24 m	.50		TTL	.80	2.0	0.0	5.0	18n	250m	0	7	AB71	DL20g
104	SN54LS240W		S	8	3.4	.25	12 m	.40		TTL	.70	2.0	0.0	5.0	18n	250m	5	C	54LS240W	F20-1
105	SN54LS241W		S	8	3.4	.25	12 m	.40		TTL	.70	2.0	0.0	5.0	18n	270m	5	C	54LS241W	F20-1
106	SN54LS244W		S	8	3.4	.25	12 m	.40		TTL	.70	2.0	0.0	5.0	18n	270m	5	C	54LS244W	F20-1
107	SN54LS540W		S	8	3.4	.25	12 m	.40		TTL	.70	2.0	0.0	5.0	18n	250m	5	C	54LS540W	F20-1
108	SN54LS541W		S	8	3.4	.25	12 m	.40		TTL	.70	2.0	0.0	5.0	18n	270m	5	C	54LS541W	F20-1
109	SN74LS240W		S	8	3.4	.25	24 m	.50		TTL	.80	2.0	0.0	5.0	18n	250m	0	7	54LS240W	F20-1
110	SN74LS241W		S	8	3.4	.25	24 m	.50		TTL	.80	2.0	0.0	5.0	18n	270m	0	7	54LS241W	F20-1

SYMBOLS AND CODES EXPLAINED IN INTERPRETER

3. LINE DRIVERS/TRANSMITTERS

IN ORDER OF: (1)TECH (2)OUTPUT MODE (3)DEV CKTS (4)TYP OUTP VOLT & (5)TYPE NO.

LINE No.	5 TYPE NUMBER	DATA SHT.	2 OMUOTDPE	3 DCEKVTS	TYP OUTPUT VOLTAGE 4 HIGH (V)	TYP OUTPUT VOLTAGE LOW (V)	MIN OUTPUT SINK CURRENT (A)	MIN OUTPUT SINK CURRENT ° OUT (V)	MAX OUTP RESIS (Ω)	1 TECH	INPUT LOGIC LEVELS MAX '0' (V)	INPUT LOGIC LEVELS MIN '1' (V)	RATED PWR SUPPLY SPAN NEG (V)	RATED PWR SUPPLY SPAN POS (V)	MAX PROP. DELAY tpd (S)	MAX OPER. POWER DISS (W)	OPER. TEMP. RANGE CODE -	OPER. TEMP. RANGE CODE +	DRAWINGS LOGIC OR BLOCK	DRAWINGS OUTLINE Δ=MO
1	SN74LS244W		S	8	3.4	.25	24 m	.50		TTL	.80	2.0	0.0	5.0	18n	270m	0	7	54LS244W	F20-1

SYMBOLS AND CODES EXPLAINED IN INTERPRETER

4. MEMORY/CLOCK DRIVERS

IN ORDER OF: (1)TECH (2)TYPE CODE (3)DEV CKTS (4)MIN OUTP SK CURR & (5)TYPE NO

LINE No.	5 TYPE NUMBER	DATA SHT.	2 TC YO PD EE	3 DC EK VT S	4 MIN OUTP SINK CURRENT (A)	° OUT (V)	SINK OUTP HIGH VOLT (V)	MAX PROP. DELAY tpd (S)	°CAP (F)	MAX INPUT CURR. (A)	1 T E C H	INPUT LOGIC LEVELS MAX '0' (V)	MIN '1' (V)	RATED PWR SUPPLY SPAN NEG (V)	POS (V)	MAX OPER. PWR. DISS. (W)	OPER TEMP RANGE CODE -	+	AF DU DN LC	DRAWINGS LOGIC OR BLOCK	OUTLINE Δ=MO
1	MC3245L		C	4	5.0m	.45	12	38n	250p	1.0m		.80	2.0	0.0	12	482m	0	7		AC12a	DL16au
2	MC3245P		C	4	5.0m	.45	12	38n	250p	1.0m		.80	2.0	0.0	12	482m	0	7		AC12a	DL16ai
3	3207A-1F		C	4	100m		25	45n	200p	250u		.80	2.0	0.0	19	1.0	0	7		AC42	DL16j
4	3207AF		C	4	100m		25	45n	200p	250u		.80	2.0	0.0	16	900m	0	7		AC42	DL16j
5	HD2922		C	4	5.0m	.45	12	40n	250p	2.0m	BMS	-1.5	-1.0	5.2	12	1.0	0	7		AC46	DL16t
6	MC3466L		C	4	40m	.55		24n	480p	6.4m	BPR	.80	2.0	0.0	22	936m	0	7		AC12	DL16au
7	MC3466P		C	4	40m	.55		24n	480p	6.4m	BPR	.80	2.0	0.0	22	936m	0	7		AC12	DL16ai
8	9646DM/0026		C	2	1.5		20	15n	1.0n	10u	CMS	.40	2.0	0.0	20	800m	0	7		AC15c	DL14bn
9	9646PC/0026		C	2	1.5		20	15n	1.0n	10u	CMS	.40	2.0	0.0	20	800m	0	7		AC15c	DL14ao
10	MC75365L		C	4	40m	.50	23	48n	200p	3.2m	DTL	.80	2.0	0.0	5.0	235m	0	7		AC13	DL16e
11	MC75365P		C	4	40m	.50	23	48n	200p	3.2m	DTL	.80	2.0	0.0	5.0	235m	0	7		AC13	DL16ad
12	MC55325F		M	2	600m	.70	23	50n	25p	3.2m	DTL	.80	2.0	0.0	5.0	350m	5	C		AC10	F16-11
13	MC75325F		M	2	600m	.75	23	50n	25p	3.2m	DTL	.80	2.0	0.0	5.0	350m	0	7		AC10	F16-11
14	MC75325P		M	2	600m	.75	23	50n	25p	3.2m	DTL	.80	2.0	0.0	5.0	350m	0	7		AC10	DL16ad
15	MC1023P		C	2	2.5m	-.70		3.5n	100n	300u	ECL	-1.3	-1.0	5.2	0.0	250m	0	7		AC36	TO116
16	MC1026P		C	2	2.5m	-.70		3.5n	100n	300u	ECL	-1.3	-1.0	5.2	0.0	140m	0	7		AC37	TO116
17	MC1223F		C	2	2.5m	.70		3.5n	100n	300u	ECL	-1.3	-1.0	5.2	0.0	250m	5	C		AC36	TO86
18	MC1223L		C	2	2.5m	-.70		3.5n	100n	300u	ECL	-1.3	-1.0	5.2	0.0	250m	5	C		AC36	TO116
19	MC1226F		C	2	2.5m	.70		3.5n	100n	300u	ECL	-1.3	-1.0	5.2	0.0	140m	5	C		AC37	TO86
20	MC1226L		C	2	2.5m	-.70		3.5n	100n	300u	ECL	-1.3	-1.0	5.2	0.0	140m	5	C		AC37	TO116
21	SP1023		C	2	2.5m	-1.5		2.0n		100u	ECL	-1.3	-1.0	5.2	0.0	250m	0	7		AC17	DL14bf
22	SP1223		C	2	2.5m	-1.5		2.0n		100u	ECL	-1.3	-1.0	5.2	0.0	250m	5	C		AC17	DL14bf
23	ICH7201CDD		C	2	50m	1.5	23	40n	500p		MOS	.90	2.1	0.0	25	1.0	0	7		AC30	D14-3a
24	ICH7201CGC		C	2	50m	1.5	23	40n	500p		MOS	.90	2.1	0.0	25	1.5	0	7		AC30a	CN1a
25	ICH7201MDD		C	2	50m	1.5	23	40n	500p		MOS	.90	2.0	0.0	25	1.0	5	C		AC30	D14-3a
26	ICH7201MGC		C	2	50m	1.5	23	40n	500p		MOS	.90	2.0	0.0	25	1.5	5	C		AC30a	CN1a
27	IM5013ACDD		C	2	50m	6.0	11	7.0n	200p		MOS	9.3	11.3	10	10	1.0	0	7		AC31f	DL14af
28	IM5013ACTC		C	2	50m	6.0	11	7.0n	200p		MOS	9.3	11.3	10	10	1.2	0	7		AC31g	CN1a
29	IM5013AMDD		C	2	50m	6.0	11	7.0n	200p		MOS	9.3	11.3	10	10	1.0	5	C		AC31f	DL14af
30	IM5013AMTC		C	2	50m	6.0	11	7.0n	200p		MOS	9.3	11.3	10	10	1.2	5	C		AC31g	CN1a
31	IM5013CDD		C	2	50m	6.0	11	7.0n	200p		MOS	8.5	11.5	10	10	1.0	0	7		AC31d	DL14af
32	IM5013CTC		C	2	50m	6.0	11	7.0n	200p		MOS	8.5	11.5	10	10	1.5	0	7		AC31e	CN1a
33	IM5013MDD		C	2	50m	6.0	11	7.0n	200p		MOS	8.5	11.5	10	10	1.0	5	C		AC31d	DL14af
34	IM5013MTC		C	2	50m	6.0	11	7.0n	200p		MOS	8.5	11.5	10	10	1.5	5	C		AC31e	CN1a
35	IM5003ACDD		C	4	50m	6.0	11	7.0n	200p		MOS	9.3	10.9	10	10	1.0	0	7		AC31b	DL14af
36	IM5003ACPD		C	4	50m	6.0	11	7.0n	200p		MOS	9.3	10.9	10	10	800m	0	7		AC31b	DL14bi
37	IM5003ACTC		C	4	50m	6.0	11	7.0n	200p		MOS	9.3	10.9	10	10	1.2	0	7		AC31c	CN1a
38	IM5003AMDD		C	4	50m	6.0	11	7.0n	200p		MOS	9.3	10.9	10	10	1.0	5	C		AC31b	DL14af
39	IM5003AMPD		C	4	50m	6.0	11	7.0n	200p		MOS	9.3	10.9	10	10	800m	5	C		AC31b	DL14bi
40	IM5003AMTC		C	4	50m	6.0	11	7.0n	200p		MOS	9.3	10.9	10	10	1.2	5	C		AC31c	CN1a
41	IM5003CDD		C	4	50m	6.0	11	7.0n	200p		MOS	9.3	10.9	10	10	1.0	0	7		AC31	DL14af
42	IM5003CPD		C	4	50m	6.0	11	7.0n	200p		MOS	9.3	10.9	10	10	800m	0	7		AC31	D14-13a
43	IM5003CTC		C	4	50m	6.0	11	7.0n	200p		MOS	9.3	10.9	10	10	1.5	0	7		AC31a	CN1a
44	IM5003MDD		C	4	50m	6.0	11	7.0n	200p		MOS	9.3	10.9	10	10	1.0	5	C		AC31	DL14af
45	IM5003MPD		C	4	50m	6.0	11	7.0n	200p		MOS	9.3	10.9	10	10	800m	5	C		AC31	D14-13a
46	IM5003MTC		C	4	50m	6.0	11	7.0n	200p		MOS	9.3	10.9	10	10	1.5	5	C		AC31a	CN1a
47	DS36147D		M	4	20m	.50	3.4	15n	50p	1.3m	MOS	.80	2.0	0.0	5.0	1.2	0	7	L	AC26	DL16Z
48	CTS0007		4	1	30m	-23	24	75n	200p	1.5m	MOS	0.8	2.0	-25	0.0		5	C		AC53a	TO100
49	CTS0007DIP		4	1	30m	-23	24	75n	200p	1.5m	MOS	0.8	2.0	-25	0.0		5	C		AC53	DL14ci
50	CTS0009		4	1	500m		24	50n	100p	75m	MOS			-20	0.0	1.5	5	C		AC54a	CN10
51	CTS0009DIP		4	1	500m		24	50n	100p	75m	MOS			-20	0.0	1.5	5	C		AC54	DL14ci
52	M002T1		C	1	2.0m	-.50	25	100n	200p		PMS	-2.0	-9.0	27	0.0	700m	0	7		AC32	TO100
53	DS1642J		C	2	400u	.30	12	30n	500p	240u	TTL	.80	2.0	0.0	12	92m	5	C		AC19b	DL14an
54	DS1672J		C	2	400u	.30	12	30n	500p	240u	TTL	.80	2.0	0.0	12	92m	5	C		AC19b	DL14an
55	DS3642J		C	2	400u	.30	12	30n	500p	240u	TTL	.80	2.0	0.0	12	92m	0	7		AC19b	DL14an
56	DS3642N		C	2	400u	.30	12	30n	500p	240u	TTL	.80	2.0	0.0	12	92m	0	7		AC19a	DL8r
57	DS3672J		C	2	400u	.30	12	30n	500p	240u	TTL	.80	2.0	0.0	12	92m	0	7		AC19b	DL14an
58	DS3672N		C	2	400u	.30	12	30n	500p	240u	TTL	.80	2.0	0.0	12	92m	0	7		AC19a	DL8r
59	DS1642H		C	2	5.0m	.50	12	22n	500p	240u	TTL	.80	2.0	0.0	12	144m	5	C		AC19	TO99
60	DS1642J-8		C	2	5.0m	.50	12	22n	500p	240u	TTL	.80	2.0	0.0	12	144m	5	C		AC19a	DL8e
61	DS1672H		C	2	5.0m	.50	12	22n	500p	240u	TTL	.80	2.0	0.0	12	144m	5	C		AC19	TO99
62	DS1672J-8		C	2	5.0m	.50	12	22n	500p	240u	TTL	.80	2.0	0.0	12	144m	5	C		AC19a	DL8e
63	DS3642H		C	2	5.0m	.50	12	22n	500p	240u	TTL	.80	2.0	0.0	12	144m	0	7		AC19	TO99
64	DS3642J-8		C	2	5.0m	.50	12	22n	500p	240u	TTL	.80	2.0	0.0	12	144m	0	7		AC19a	DL8e
65	DS3642N-8		C	2	5.0m	.50	12	22n	500p	240u	TTL	.80	2.0	0.0	12	144m	0	7		AC19a	DL8r
66	DS3672H		C	2	5.0m	.50	12	22n	500p	240u	TTL	.80	2.0	0.0	12	144m	0	7		AC19	TO99
67	DS3672J-8		C	2	5.0m	.50	12	22n	500p	240u	TTL	.80	2.0	0.0	12	144m	0	7		AC19a	DL8e
68	DS3672N-8		C	2	5.0m	.50	12	22n	500p	240u	TTL	.80	2.0	0.0	12	144m	0	7		AC19a	DL8r
69	DS75364J		C	2	40m	.50	23	35n	390p	700u	TTL	1.0	5.0	0.0	24	188m	0	7		AC15c	DL14an
70	DS75364N		C	2	40m	.50	23	35n	390p	700u	TTL	1.0	5.0	0.0	24	188m	0	7		AC15a	DL8r
71	DS75364N-8		C	2	40m	.50	22	35n	390p	700u	TTL	1.0	5.0	0.0	28	414m	0	7		AC15a	DL8r
72	9646DC		C	2	1.5		20	15n	1.0n	10u	TTL	.40	2.0	0.0	20	800m	0	7		AC15c	DL14ao
73	9646PC		C	2	1.5		20	15n	1.0n	10u	TTL	.40	2.0	0.0	20	800m	0	7		AC15c	DL14bn
74	DS0025CN8		C	2	1.5		30	30n	1.0n		TTL	1.0	30	0.0	5.0	875m	0	8		AC15a	DL8c
75	DS0025CN-8		C	2	1.5		29	30n	1.0n	10u	TTL	1.5	29	0.0	30	120m	0	8		AC15a	DL8r
76	DS0026CJ8		C	2	1.5		20	20n	500u	10u	TTL	0.4	2.0	0.0	5.0		0	7		AC15a	DL8t
77	DS0026CJ		C	2	1.5		20	12n	1.0n	10u	TTL	.40	2.0	0.0	20	800m	0	7		AC15c	DL14an
78	DS0026CN8		C	2	1.5		20	20n	500u	10u	TTL	0.4	2.0	0.0	5.0		0	7		AC15a	DL8c
79	DS0026CN-8		C	2	1.5		22	12n	1.0n	10u	TTL	.40	2.0	0.0	22	800m	0	7		AC15a	DL8r
80	DS0026F		C	2	1.5		20	50n	1.0n		TTL	.40	20	0.0	22	2.0m	5	C		AC15C	F14-15
81	DS0026G		C	2	1.5		20	12n	1.0n	10u	TTL	.40	2.0	0.0	20	800m	5	C		AC15b	CN10
82	DS0026J8		C	2	1.5		20	20n	500u	10u	TTL	0.4	2.0	0.0	5.0		5	C		AC15a	DL8t
83	DS0026J		C	2	1.5		20	12n	1.0n	10u	TTL	.40	2.0	0.0	20	800m	5	C		AC15c	DL14an
84	DS0026W		C	2	1.5		20	20n	1.0n	10u	TTL	.40	2.0	0.0	20	800m	0	7		AC15c	F14-5
85	DS0056CG		C	2	1.5		20	20n	1.0n	10u	TTL	.40	2.0	0.0	20	600m	0	7		AC20b	CN10
86	DS0056CJ8		C	2	1.5		20	20n	500u	10u	TTL	0.4	2.0	0.0	5.0		0	7		AC20a	DL8t
87	DS0056CJ		C	2	1.5		20	12n	1.0n	10u	TTL	.40	2.0	0.0	20	600m	0	7		AC20c	DL14an
88	DS0056CN8		C	2	1.5		20	20n	500u	10u	TTL	0.4	2.0	0.0	5.0		0	7		AC20a	DL8c
89	DS0056CN-8		C	2	1.5		22	12n	1.0n	10u	TTL	.40	2.0	0.0	22	600m	0	7		AC20a	DL8r
90	DS0056G		C	2	1.5		20	20n	1.0n	10u	TTL	.40	2.0	0.0	20	600m	5	C		AC20b	CN10
91	DS0056J8		C	2	1.5		20	20n	500u	10u	TTL	0.4	2.0	0.0	5.0		5	C		AC20a	DL8t
92	DS0056J		C	2	1.5		20	12n	1.0n	10u	TTL	.40	2.0	0.0	20	600m	5	C		AC20c	DL14an
93	DS1671J		C	2	1.5		19	12n	1.0n	10u	TTL	.40	2.0	0.0	20	800m	5	C		AC20c	DL14an
94	DS3671J		C	2	1.5		19	12n	1.0n	10u	TTL	.40	2.0	0.0	20	800m	0	7		AC20c	DL14an
95	DS3671N-8		C	2	1.5		19	12n	1.0n	10u	TTL	.40	2.0	0.0	20	800m	0	7		AC20a	DL8r
96	SFC50026		C	2	1.5		19	15n	1.0n	10u	TTL	.40	2.5	0.0	20	800m	0	7		AC15	TO99
97	DS1644N		C	4	5.0m	.50		40n	400p	1.0m	TTL	.80	2.0	0.0	12	1.0	5	C		AC22	DL16bv
98	DS1674N		C	4	5.0m	.50		40n	400p	1.0m	TTL	.80	2.0	0.0	12	1.0	5	C		AC12	DL16bv
99	DS3643J		C	4	5.0m	.30	12	25n	400p	1.0m	TTL	.80	2.0	0.0	15	399m	0	7	D	AC21	DL14an
100	DS3643N		C	4	5.0m	.30	12	25n	400p	1.0m	TTL	.80	2.0	0.0	15	399m	0	7	D	AC21	DL14o
101	DS3673J		C	4	5.0m	.30	12	25n	400p	1.0m	TTL	.80	2.0	0.0	15	399m	0	7	D	AC21	DL14an
102	DS3673N		C	4	5.0m	.30	12	25n	400p	1.0m	TTL	.80	2.0	0.0	15	399m	0	7	D	AC21	DL14o
103	ZN1002E		M	1	110m	.90	15	30n		1.6m	TTL	.40	2.4	0.0	5.0	325m	0	7		AC35	DL16af
104	DS3629J		M	1	420m	.85		110n	20p	12m	TTL	.80	3.5	0.0	14	560m	0	7	D	AC1a	DL16g
105	DS3629N		M	1	420m	.85		110n	20p	12m	TTL	.80	3.5	0.0	14	560m	0	7	D	AC1a	DL14o
106	DS75324J		M	1	420m	.85		110n	20p	6.0m	TTL	.80	3.5	0.0	14	560m	0	7	D	AC1	DL16g
107	DS75324N		M	1	420m	.85		110n	20p	6.0m	TTL	.80	3.5	0.0	14	560m	0	7	D	AC1	DL14o
108	DS3622J		M	2	10m	.50	15	21n	300p	1.0m	TTL	.80	2.0	0.0	15	360m	0	7		AC51	DL14an
109	DS3622N		M	2	10m	.50	15	21n	300p	1.0m	TTL	.80	2.0	0.0	15	360m	0	7		AC51	DL14o
110	DS75322J		M	2	10m	.50	15	21n	300p	1.0m	TTL	.80	2.0	0.0	15	342m	0	7		AC51	DL14an

SYMBOLS AND CODES EXPLAINED IN INTERPRETER

4. MEMORY/CLOCK DRIVERS

IN ORDER OF: (1)TECH (2)TYPE CODE (3)DEV CKTS (4)MIN OUTP SK CURR & (5)TYPE NO

LINE No.	5 TYPE NUMBER	DATA SHT.	2 TYPE CODE	3 DEV CKTS	4 MIN OUTP SINK CURRENT (A)	° OUT (V)	SINK OUTP HIGH VOLT (V)	MAX PROP. DELAY tpd (S)	°CAP (F)	MAX INPUT CURR. (A)	1 TECH	INPUT LOGIC LEVELS MAX '0' (V)	MIN '1' (V)	RATED PWR SUPPLY SPAN NEG (V)	POS (V)	MAX OPER. PWR. DISS. (W)	OPER TEMP RANGE CODE -	+	AF DU DN LC	DRAWINGS LOGIC OR BLOCK	OUTLINE Δ=MO
1	DS75322N		M	2	10m	.50	15	21n	300p	1.0m	TTL	.80	2.0	0.0	15	342m	0	7		AC51	DL14o
2	DS55325W		M	2	600m	.70	23	50n	25p	1.6m	TTL	.80	2.0	0.0	24	1.5	5	C		AC10	F16-1
3	DS1640J		M	4	20m	1.1	4.3	25n	250p	750u	TTL	.80	2.0	0.0	5.0	467m	5	C		AC23a	DL14an
4	DS1647J		M	4	20m	.50	3.4	7.0n	50p	500u	TTL	.80	2.0	0.0	5.0	550m	5	C	L	AC26	DL16g
5	DS1670J		M	4	20m	.50	4.3	25n	250p	750u	TTL	.80	2.0	0.0	5.0	467m	5	C		AC23	DL14an
6	DS1677J		M	4	20m	.50	3.4	7.0n	50p	500u	TTL	.80	2.0	0.0	5.0	575m	5	C	L	AC26	DL16g
7	DS3640J		M	4	20m	1.0	4.3	25n	250p	750u	TTL	.80	2.0	0.0	5.0	467m	0	7		AC23a	DL14an
8	DS3640N		M	4	20m	1.0	4.3	25n	250p	750u	TTL	.80	2.0	0.0	5.0	467m	0	7		AC23a	DL14o
9	DS3647J		M	4	20m	.50	3.4	7.0n	50p	500u	TTL	.80	2.0	0.0	5.0	700m	0	7	L	AC26	DL16g
10	DS3670J		M	4	20m	.50	4.3	25n	250p	750u	TTL	.80	2.0	0.0	5.0	467m	0	7		AC23a	DL14an
11	DS3670N		M	4	20m	.50	4.3	25n	250p	750u	TTL	.80	2.0	0.0	5.0	467m	0	7		AC23a	DL14o
12	DS3677J		M	4	20m	.50	3.4	7.0n	50p	500u	TTL	.80	2.0	0.0	5.0	725m	0	7	L	AC26	DL16g
13	DS16147D		M	4	20m	.50		25n	50p	500u	TTL	.80	2.0	0.0	5.0	1.0	5	C	L	AC26	DL16∅
14	DS16147J		M	4	20m	.50	3.4	7.0n	50p	400u	TTL	.80	2.0	0.0	5.0	500m	5	C	L	AC26	DL16g
15	DS16177J		M	4	20m	.50	3.4	7.0n	50p	400u	TTL	.80	2.0	0.0	5.0	500m	5	C	L	AC26	DL16g
16	DS36147J		M	4	20m	.50	3.4	7.0n	50p	500u	TTL	.80	2.0	0.0	5.0	700m	0	7	L	AC26	DL16g
17	DS36177J		M	4	20m	.50	3.4	7.0n	50p	500u	TTL	.80	2.0	0.0	5.0	475m	0	7	L	AC26	DL16g
18	75324A		M	4	420m	.85		110n	20p		TTL	.80	3.5	0.0	14	800m	0	7		AC1	DL14b
19	ITT75324B		M	4	420m	.85		110n	20p	12m	TTL	.80	3.5	0.0	14	560m	0	7	D	AC1	FP∅
20	ITT75324J		M	4	420m	.85		110n	20p	12m	TTL	.80	3.5	0.0	14	560m	0	7	D	AC1	DL∅
21	ITT75324N		M	4	420m	.85		110n	20p	12m	TTL	.80	3.5	0.0	14	560m	0	7	D	AC1	DL∅
22	US75324A		M	4	420m	.85		110n	20p	12m	TTL	.80	3.5	0.0	14	560m	0	7	D	AC1	DL14a
23	US75324G		M	4	420m	.85		110n	20p	12m	TTL	.80	3.5	0.0	14	560m	0	7	D	AC1	F14-2
24	US75324H		M	4	420m	.85		110n	20p	12m	TTL	.80	3.5	0.0	14	560m	0	7	D	AC1	D14-3
25	US75324J		M	4	420m	.85		110n	20p	12m	TTL	.80	3.5	0.0	14	560m	0	7	D	AC1	F14-2a
26	SN55326W		M	4	500m	.70	23	50n	25p	6.4m	TTL	.80	2.0	0.0	5.0	375m	5	C		AC8	Δ004AG
27	SN55327W		M	4	500m	.70	23	55n	25p	6.4m	TTL	.80	2.0	0.0	5.0	275m	5	C		AC9	Δ004AG
28	55325DM		M	4	600m	.70	23	50n	25p	1.6m	TTL	.80	2.0	0.0	24	1.5	5	C		AC10	DL16i
29	55325FM		M	4	600m	.70	23	50n	25p	1.6m	TTL	.80	2.0	0.0	24	1.5	5	C		AC10	F16-3
30	55326DM		M	4	600m	.70	23	50n	25p	1.6m	TTL	.80	2.0	0.0	5.0	375m	5	C		AC8	DL16i
31	55326FM		M	4	600m	.70	23	50n	25p	1.6m	TTL	.80	2.0	0.0	5.0	375m	5	C		AC8	F16-3
32	55327DM		M	4	600m	.70	23	55n	25p	1.6m	TTL	.80	2.0	0.0	24	1.3	5	C		AC9	DL16i
33	55327FM		M	4	600m	.70	23	55n	25p	1.6m	TTL	.80	2.0	0.0	24	1.3	5	C		AC9	F16-3
34	75325DC		M	4	600m	.75	23	50n	25p	1.6m	TTL	.80	2.0	0.0	24	1.5	0	7		AC10	DL16i
35	75325PC		M	4	600m	.75	23	50n	25p	1.6m	TTL	.80	2.0	0.0	24	1.5	0	7		AC10	DL16ak
36	75326DC		M	4	600m	.75	23	50n	25p	1.6m	TTL	.80	2.0	0.0	5.0	375m	0	7		AC8	DL16i
37	75326PC		M	4	600m	.75	23	50n	25p	1.6m	TTL	.80	2.0	0.0	5.0	375m	0	7		AC8	DL16ak
38	75327DC		M	4	600m	.75	23	55n	25p	1.6m	TTL	.80	2.0	0.0	24	1.3	0	7		AC9	DL16i
39	75327PC		M	4	600m	.75	23	55n	25p	1.6m	TTL	.80	2.0	0.0	24	1.3	0	7		AC9	DL16ak
40	ITT55325J		M	4	600m	.70		50n	25p	1.6m	TTL	.80	2.0	0.0	24	1.5	5	C		AC10	DL∅
41	ITT55325N		M	4	600m	.70		50n	25p	1.6m	TTL	.80	2.0	0.0	24	1.5	5	C		AC10	DL∅
42	ITT75325J		M	4	600m	.75		50n	25p	1.6m	TTL	.80	2.0	0.0	24	1.5	0	7		AC10	DL∅
43	ITT75325N		M	4	600m	.75		50n	25p	1.6m	TTL	.80	2.0	0.0	24	1.5	0	7		AC10	DL∅
44	RC75325DD		M	4	600m	.75	23	50n	25p	1.6m	TTL	.80	2.0	0.0	24	1.0	0	7		AC10	DL16m
45	RM55325DD		M	4	600m	.70	23	50n	25p	1.6m	TTL	.80	2.0	0.0	24	1.0	5	C		AC10	DL16m
46	SFC5325E		M	4	600m	.75	19	50n	25p	1.6m	TTL	.80	2.0	0.0	5.0	350m	0	7		AC10	D16-13a
47	SFC5325KM		M	4	600m	.70	19	50n	25p	1.6m	TTL	.80	2.0	0.0	5.0	350m	5	C		AC10	D16-13a
48	SFC5325KT		M	4	600m	.75	19	50n	25p	1.6m	TTL	.80	2.0	0.0	5.0	350m	2	8		AC10	D16-13a
49	SN55325W		M	4	600m	.70	23	50n	25p	1.6m	TTL	.80	2.0	0.0	24	1.5	5	C		AC10	Δ004AG
50	DS1646J		M	6	20m	1.1	3.5	10n	50p	250u	TTL	.80	2.0	0.0	5.0	500m	5	C	C	AC49	DL16g
51	DS1646W		M	6	20m	.50	3.5	10n	50p	250u	TTL	.80	2.0	0.0	5.0	500m	5	C	C	AC49	F16-1
52	DS1649W		M	6	20m	1.1	3.5	25n	500p	250u	TTL	.80	2.0	0.0	5.0	412m	5	C		AC27a	F16-1
53	DS1676J		M	6	20m	.50	3.5	10n	50p	250u	TTL	.80	2.0	0.0	5.0	500m	5	C	C	AC49	DL16g
54	DS1676W		M	6	20m	.50	3.5	10n	50p	250u	TTL	.80	2.0	0.0	5.0	500m	5	C	C	AC49	F16-1
55	DS1679W		M	6	20m	.50	3.5	25n	500p	250u	TTL	.80	2.0	0.0	5.0	412m	5	C		AC27a	F16-1
56	DS3646J		M	6	20m	1.1	3.5	10n	50p	250u	TTL	.80	2.0	0.0	5.0	500m	0	7	C	AC49	DL16g
57	DS3646N		M	6	20m	1.1	3.5	10n	50p	250u	TTL	.80	2.0	0.0	5.0	500m	0	7	C	AC49	DL16bv
58	DS3676J		M	6	20m	.50	3.5	10n	50p	250u	TTL	.80	2.0	0.0	5.0	500m	0	7	C	AC49	DL16g
59	DS3676N		M	6	20m	.50	3.5	10n	50p	250u	TTL	.80	2.0	0.0	5.0	500m	0	7	C	AC49	DL16bv
60	DS16149W		M	6	20m	1.1	3.5	25n	500p	250u	TTL	.80	2.0	0.0	5.0	300m	5	C		AC50a	F16-1
61	DS16179W		M	6	20m	.50	3.5	25n	500p	250u	TTL	.80	2.0	0.0	5.0	300m	5	C		AC27a	F16-1

SYMBOLS AND CODES EXPLAINED IN INTERPRETER

5. PERIPHERAL/POWER DRIVERS

IN ORDER OF: (1)TECH (2)DEV CKTS (3)MAX ION (4)MAX VCE & (5)TYPE NUMBER

LINE No.	5 TYPE NUMBER	DATA SHT.	2 DEVCTS	3 ABS MAX Ion (A)	4 ABS MAX Vce (V)	OUTPUT TRANSIS. OUTPUT CON	MAX OUTPUT ON VOLTAGE Von (V)	° IC (A)	GATE FUNC. CODE	IC NO PMUP T	MAX PROP DELAY tpd (S)	1 TECH	INPUT LOGIC LEVELS MAX '0' (V)	MIN '1' (V)	RATED PWR SUP SPAN NEG (V)	POS (V)	MAX OPER. POWER DISS. (W)	OPER TEMP RANGE CODE -	+	DRAWINGS LOGIC OR BLOCK	OUTLINE Δ=MO
1	TEB1027		1	100m			1.3	40m	MUL	T	2.0u		0.8	2.0	10	5.0	50 m	0	7		DL16dq
2	DS3654J		1	400m	45	OC	2.6	750u			2.5u		.80	2.6	0.0	8.0	675m	0	7	AD107	DL16g
3	SH3011		2	5.0	80	OE	1.8	5.0	NIV	T	1.1u		.80	2.0	0.0	5.0	850m	0	7	AD105	CN15
4	TEC1031			300m		OE	1.5	250m	NIV	A		BPR					3.8	5	1	AD125	TO39
5	TEC1032			300m		OE	1.5	250m	INV	A		BPR					3.8	5	1	AD126	TO39
6	TDB1647A-DP		1	1.0	50	OE	1.4	300m	DIF			BPR			0.0	45		0	7	AD95	DL8o
7	SG3640#ai		1	4.4	40	OC	2.5	4.4		X		BPR			0.0	40	10	2	8	AD166	TO220
8	SG3641#ai		1	4.4	40	OC	2.5	4.4		X		BPR			0.0	40	10	2	8	AD166a	TO220
9	SG3700#ai		2	1.0	35	OC				T		BPR	0.8	2.0	0.0	40				AD167	DL16Ø
10	SG293A#ai		2	1.5	1.8	OC	1.8	1.0	NAAD	X		BPR	0.8	2.0		40				AD161	DL16Ø
11	LPD4101		2	2.0	0.9	OC	800m	1.8	AND	F	2.0u	BPR	0.8	2.0	0	10	6.0	0	C	AD152	TO3
12	LPD4102		2	2.0	0.9	OC	800m	1.8	NAND	F	2.0u	BPR	0.8	2.0	0	10	6.0	0	C	AD155	TO3
13	LPD4103		2	2.0	0.9	OC	800m	1.8	NOR	F	2.0u	BPR	0.8	2.0	0	10	6.0	0	C	AD153	TO3
14	LPD4104		2	2.0	0.9	OC	800m	1.8	OR	F	2.0u	BPR	0.8	2.0	0	10	6.0	0	C	AD156	TO3
15	LPD4105		2	2.0	0.9	OC	800m	1.8	INV	F	2.0u	BPR	0.8	2.0	0	10	6.0	0	C	AD154	TO3
16	LPD4106		2	2.0	0.9	OC	800m	1.8	NIV	F	2.0u	BPR	0.8	2.0	0	10	6.0	0	C	AD157	TO3
17	SG3636#ai		2	2.0	2.0	OE	2.0	1.0	NAAD	T		BPR	0.8	2.0		30				AD162	DL16Ø
18	SG3638#ai		2	4.4	40	OC	2.5	4.4	AND	X		BPR			0.0	40	10	2	8	AD164	F10Ø
19	SG3639#ai		2	4.4	40	OC	2.5	4.4		X		BPR			0.0	40	10	2	8	AD165	F10Ø
20	SG3637#ai		4	2.5	45	OC	2.2	2.0	OR	X		BPR			0.0	25				AD163	DL16Ø
21	DS1631J		2	300m	56	OC	1.1	300m	AND	X	200n	CMS	2.5	12.5	0.0	15	210m	5	1	AD49	DL14an
22	DS1632J		2	300m	56	OC	1.1	300m	NAND	X	150n	CMS	2.5	12.5	0.0	15	270m	5	1	AD49a	DL14an
23	DS1633J		2	300m	56	OC	1.1	300m	OR	X	200n	CMS	2.5	12.5	0.0	15	240m	5	1	AD49b	DL14an
24	DS1634J		2	300m	56	OC	1.1	300m	NOR	X	150n	CMS	2.5	12.5	0.0	15	270m	5	1	AD49c	DL14an
25	DS3631J		2	300m	56	OC	1.1	300m	AND	X	200n	CMS	2.5	12.5	0.0	15	210m	0	7	AD49	DL14an
26	DS3631N-8		2	300m	56	OC	1.1	300m	NAND	X	200n	CMS	2.5	12.5	0.0	15	150m	0	7	AD49	DL8r
27	DS3632J		2	300m	56	OC	1.1	300m	NAND	X	150n	CMS	2.5	12.5	0.0	15	270m	0	7	AD49a	DL14an
28	DS3632N-8		2	300m	56	OC	1.1	300m	AND	X	150n	CMS	2.5	12.5	0.0	15	210m	0	7	AD49a	DL8r
29	DS3633N-8		2	300m	56	OC	1.1	300m	NOR	X	200n	CMS	2.5	12.5	0.0	15	225m	0	7	AD49b	DL8r
30	DS3634J		2	300m	56	OC	1.1	300m	NOR	X	150n	CMS	2.5	12.5	0.0	15	270m	0	7	AD49c	DL14an
31	DS3634J-8		2	300m	56	OC	1.1	300m	OR	X	150n	CMS	2.5	12.5	0.0	15	270m	0	7	AD49c	DL8e
32	DS3634N-8		2	300m	56	OC	1.1	300m	OR	X	150n	CMS	2.5	12.5	0.0	15	270m	0	7	AD49c	DL8r
33	LAS8100		1	3		TP			NIV	F	300n	DTL			0	15		5	C	AD150	TO3
34	LAS8100P		1	3		TP			NIV	F	300n	DTL			0	15		5	C	AD151	TO220
35	LAS8101		2	3		TP			NIV	F	300n	DTL			0	15		5	C	AD151	TO3
36	S55V11		1	2.0	35	OC	2.5	1.0	INV	X	10n	MNV	.80	2.0	0.0	10	2	5	1	AD94	TO3
37	S55V21		1	2.0	35	OC	2.5	1.0	INV	X	10n	MNV	.80	2.0	0.0	10	2	5	1	AD94a	TO39
38	S55V01		1	2.0	60	OC	3.5	1.0	INV	X	10n	MNV	.80	2.0	0.0	10	2	5	1	AD94	TO3
39	S55V02		1	2.0	60	OC	3.5	1.0	INV	X	10n	MNV	.80	2.0	0.0	10	2	5	1	AD94a	TO39
40	S55V12		1	2.0	90	OC	4.5	1.0	INV	X	10n	MNV	.80	2.0	0.0	10	2	5	1	AD94	TO3
41	S55V22		1	2.0	90	OC	4.5	1.0	INV	X	10n	MNV	.80	2.0	0.0	10	2	5	1	AD94a	TO39
42	AY5-9050		5	60m	65		2.0	50m	INV	T	300u	PMS	.40	2.4	52	5.0	800m	0	7	AD106	DL14bb
43	UDN2956R		5	500m	80	EC	1.6	350m	NAND	H		RTL	.80	10	80	0.0	2.0	0	7	AD92	DL14bh
44	UDN2957R		5	500m	80	EC	1.6	350m	INV	L		RTL	.40	3.9	80	0.0	2.0	0	7	AD92	DL14bh
45	9665DC		7	500m	55	OC	1.1	100m	INV	X	5.0u	RTL					1.0	0	8	AD104a	DL16h
46	SH2002HC		1	250m	40	OC	450m	150m	NAND	A		TTL	1.1	1.9	0.0	5.0	153m	0	7	AD34a	TO100
47	SH2002HM		1	250m	40	OC	400m	250m	NAND	A		TTL	1.1	1.9	0.0	5.0	153m	5	1	AD34a	TO100
48	DH0016CN		1	250m	70	OE	600m	250m	MUL	A		TTL	.85	1.8	0.0	5.0	455m	0	7	AD66	DL10a
49	SH2001FC		1	500m	40	OC	450m	150m	NAND	A	200n	TTL	1.1	1.9	0.0	5.0	153m	0	7	AD34a	TO91
50	SH2001HC		1	500m	40	OC	450m	150m	NAND	A	200n	TTL	1.1	1.9	0.0	5.0	153m	0	7	AD34a	TO100
51	SH2001HM		1	500m	40	OC	400m	250m	NAND	A	160n	TTL	1.1	1.9	0.0	5.0	153m	5	1	AD34a	TO100
52	SH2200HC		1	500m	50	OC	600m	500m	NAND	A		TTL	.85	1.8	0.0	5.0	62 m	0	7	AD34a	TO100
53	SH2200HM		1	500m	50	OC	600m	500m	NAND	A		TTL	.90	1.7	0.0	5.0	5 m	5	1	AD34a	TO100
54	SH2201HC		1	500m	100	OC	600m	500m	NAND	A		TTL	.85	1.8	0.0	5.0	62 m	0	7	AD34a	TO100
55	SH2201HM		1	500m	100	OC	600m	500m	NAND	A		TTL	.90	1.7	0.0	5.0	5 m	5	1	AD34a	TO100
56	uA75451ARC		2			OC			NAND	A	55n	TTL	0.8	2.0	0.0	5.0	800m	0	7	AD1	DL8f
57	uA75451BRC		2			OC			NAND	A	25n	TTL	0.8	2.0	0.0	5.0	800m	0	7	AD1	DL8f
58	uA75452ARC		2			OC			NAND	A	65n	TTL	0.8	2.0	0.0	5.0	800m	0	7	AD2	DL8f
59	uA75452BRC		2			OC			NAND	A	35n	TTL	0.8	2.0	0.0	5.0	800m	0	7	AD2	DL8f
60	uA75453ARC		2			OC			NAND	A	55n	TTL	0.8	2.0	0.0	5.0	800m	0	7	AD3	DL8f
61	uA75453BRC		2			OC			NAND	A	25n	TTL	0.8	2.0	0.0	5.0	800m	0	7	AD3	DL8f
62	55450ADM		2	300m	30	IT	800m	300m	NAND	A	65n	TTL	.80	2.0	0.0	5.0	5 m	5	1	AD35	DL14ao
63	55450AFM		2	300m	30	IT	800m	300m	NAAD	A	65n	TTL	.80	2.0	0.0	5.0	5 m	5	1	AD35	TO86
64	55450BDM		2	300m	30	IT	800m	300m	NAND	A	30n	TTL	.80	2.0	0.0	5.0	5 m	5	1	AD35	DL14ao
65	55450BF		2	300m	30	IT	800m	300m	NAAD	A	30n	TTL	.80	2.0	0.0	5.0	5 m	5	1	AD35	DL14av
66	55450BFM		2	300m	30	IT	800m	300m	NAAD	A	30n	TTL	.80	2.0	0.0	5.0	5 m	5	1	AD35	TO86
67	55450BN		2	300m	30	IT	800m	300m	NAAD	A	22n	TTL	.80	2.0	0.0	5.0	5 m	5	1	AD35	DL14b
68	55451AHM		2	300m	30	OC	800m	300m	AND	A	55n	TTL	.80	2.0	0.0	5.0	325m	5	1	AD1	TO99
69	55451ARM		2	300m	30	OC	800m	300m	AND	A	55n	TTL	.80	2.0	0.0	5.0	325m	5	1	AD1	DL8f
70	55451BHM		2	300m	30	OC	800m	300m	AND	A	25n	TTL	.80	2.0	0.0	5.0	325m	5	1	AD1	TO99
71	55451BRM		2	300m	30	OC	800m	300m	AND	A	25n	TTL	.80	2.0	0.0	5.0	325m	5	1	AD1	DL8f
72	55451BT		2	300m	30	OC	800m	300m	AND	A	25n	TTL	.80	2.0	0.0	5.0	325m	5	1	AD1	CN12
73	55452AHM		2	300m	30	OC	800m	300m	NAND	A	65n	TTL	.80	2.0	0.0	5.0	355m	5	1	AD109a	TO99
74	55452ARM		2	300m	30	OC	800m	300m	NAND	A	65n	TTL	.80	2.0	0.0	5.0	355m	5	1	AD2	DL8f
75	55452BHM		2	300m	30	OC	800m	300m	NAND	A	35n	TTL	.80	2.0	0.0	5.0	355m	5	1	AD109a	TO99
76	55452BRM		2	300m	30	OC	800m	300m	NAND	A	35n	TTL	.80	2.0	0.0	5.0	355m	5	1	AD2	DL8f
77	55452BT		2	300m	30	OC	800m	300m	NAND	A	35n	TTL	.80	2.0	0.0	5.0	355m	5	1	AD109a	CN12
78	55453AHM		2	300m	30	OC	800m	300m	OR	A	55n	TTL	.80	2.0	0.0	5.0	340m	5	1	AD109d	TO99
79	55453ARM		2	300m	30	OC	800m	300m	OR	A	55n	TTL	.80	2.0	0.0	5.0	340m	5	1	AD3	DL8f
80	55453BHM		2	300m	30	OC	800m	300m	OR	A	25n	TTL	.80	2.0	0.0	5.0	340m	5	1	AD109d	TO99
81	55453BRM		2	300m	30	OC	800m	300m	OR	A	25n	TTL	.80	2.0	0.0	5.0	340m	5	1	AD3	DL8f
82	55453BT		2	300m	30	OC	800m	300m	OR	A	25n	TTL	.80	2.0	0.0	5.0	340m	5	1	AD109d	CN12
83	55454AHM		2	300m	30	OC	800m	300m	NOR	A	65n	TTL	.80	2.0	0.0	5.0	395m	5	1	AD109c	TO99
84	55454ARM		2	300m	30	OC	800m	300m	NOR	A	65n	TTL	.80	2.0	0.0	5.0	395m	5	1	AD4	DL8f
85	55454BHM		2	300m	30	OC	800m	300m	NOR	A	35n	TTL	.80	2.0	0.0	5.0	395m	5	1	AD109c	TO99
86	55454BRM		2	300m	30	OC	800m	300m	NOR	A	35n	TTL	.80	2.0	0.0	5.0	395m	5	1	AD4	DL8f
87	55454BT		2	300m	30	OC	800m	300m	NOR	A	35n	TTL	.80	2.0	0.0	5.0	395m	5	1	AD109c	CN12
88	75450ADC		2	300m	30	IT	700m	300m	NAND	A	65n	TTL	.80	2.0	0.0	5.0	5 m	0	7	75-430N	DL14ao
89	75450APC		2	300m	30	IT	700m	300m	NAND	A	65n	TTL	.80	2.0	0.0	5.0	5 m	0	7	75-430N	DL16ak
90	75450BA		2	300m	30	IT	800m	300m	NAAD	A	22n	TTL	.80	2.0	0.0	5.0	800m	0	7	AD35	DL14b
91	75450BDC		2	300m	30	IT	700m	300m	NAND	A	30n	TTL	.80	2.0	0.0	5.0	5 m	0	7	75-430N	DL14ao
92	75450BPC		2	300m	30	IT	700m	300m	NAND	A	30n	TTL	.80	2.0	0.0	5.0	5 m	0	7	75-430N	DL16ak
93	75451AHC		2	300m	30	OC	700m	300m	AND	A	55n	TTL	.80	2.0	0.0	5.0	325m	0	7	AD1	TO99
94	75451ARC		2	300m	30	OC	700m	300m	AND	A	55n	TTL	.80	2.0	0.0	5.0	325m	0	7	75-431P	DL8f
95	75451BHC		2	300m	30	OC	700m	300m	AND	A	25n	TTL	.80	2.0	0.0	5.0	325m	0	7	AD1	TO99
96	75451BRC		2	300m	30	OC	700m	300m	AND	A	25n	TTL	.80	2.0	0.0	5.0	325m	0	7	75-431P	DL8f
97	75451BV		2	300m	30	OC	800m	300m	AND	A	25n	TTL	.80	2.0	0.0	5.0	800m	0	7	AD1	DL8s
98	75452AHC		2	300m	30	OC	700m	300m	NAND	A	65n	TTL	.80	2.0	0.0	5.0	355m	0	7	AD109a	TO99
99	75452ARC		2	300m	30	OC	700m	300m	NAND	A	65n	TTL	.80	2.0	0.0	5.0	355m	0	7	40-107B	DL8f
100	75452BHC		2	300m	30	OC	700m	300m	NAND	A	35n	TTL	.80	2.0	0.0	5.0	355m	0	7	AD109a	TO99
101	75452BRC		2	300m	30	OC	700m	300m	NAND	A	35n	TTL	.80	2.0	0.0	5.0	355m	0	7	40-107B	DL8f
102	75452BV		2	300m	30	OC	800m	300m	NAND	A	35n	TTL	.80	2.0	0.0	5.0	800m	0	7	AD109a	DL8s
103	75453AHC		2	300m	30	OC	700m	300m	OR	A	55n	TTL	.80	2.0	0.0	5.0	340m	0	7	AD109d	TO99
104	75453ARC		2	300m	30	OC	700m	300m	OR	A	55n	TTL	.80	2.0	0.0	5.0	340m	0	7	75-433P	DL8f
105	75453BHC		2	300m	30	OC	700m	300m	OR	A	25n	TTL	.80	2.0	0.0	5.0	340m	0	7	AD109d	TO99
106	75453BRC		2	300m	30	OC	700m	300m	OR	A	25n	TTL	.80	2.0	0.0	5.0	340m	0	7	75-433P	DL8f
107	75453BV		2	300m	30	OC	800m	300m	OR	A	25n	TTL	.80	2.0	0.0	5.0	800m	0	7	AD109d	DL8s
108	75454AHC		2	300m	30	OC	700m	300m	NOR	A	65n	TTL	.80	2.0	0.0	5.0	395m	0	7	AD109c	TO99
109	75454ARC		2	300m	30	OC	700m	300m	NOR	A	65n	TTL	.80	2.0	0.0	5.0	395m	0	7	AD4	DL8f
110	75454ATC		2	300m	30	OC	700m	300m	NOR	A	65n	TTL	.80	2.0	0.0	5.0	395m	0	7	AD4	DL8q

SYMBOLS AND CODES EXPLAINED IN INTERPRETER

5. PERIPHERAL/POWER DRIVERS

IN ORDER OF: (1)TECH (2)DEV CKTS (3)MAX ION (4)MAX VCE & (5)TYPE NUMBER

LINE No.	5 TYPE NUMBER	DATA SHT.	2 DC EK VT S	OUTPUT TRANSIS. 3 ABS MAX Ion (A)	4 ABS MAX Vce (V)	OUT PUT CON	MAX OUTPUT ON VOLTAGE Von (V)	° IC (A)	GATE FUNC. CODE	IC NO PM UP T	MAX PROP DELAY tpd (S)	1 TECH	INPUT LOGIC LEVELS MAX '0' (V)	MIN '1' (V)	RATED PWR SUP SPAN NEG (V)	POS (V)	MAX OPER. POWER DISS. (W)	OPER TEMP RANGE CODE -	+	DRAWINGS LOGIC OR BLOCK	OUTLINE Δ=MO
1	75454BHC		2	300m	30	OC	700m	300m	NOR	A	35n	TTL	.80	2.0	0.0	5.0	395m	0	7	AD109c	TO99
2	75454BRC		2	300m	30	OC	700m	300m	NOR	A	35n	TTL	.80	2.0	0.0	5.0	395m	0	7	AD4	DL8f
3	75454BTC		2	300m	30	OC	700m	300m	NOR	A	35n	TTL	.80	2.0	0.0	5.0	395m	0	7	AD4	DL8q
4	75454BV		2	300m	30	OC	800m	300m	NOR	A	35n	TTL	.80	2.0	0.0	5.0	800m	0	7	AD109c	DL8s
5	DS55450J		2	300m	30	IT	800m	300m	NAAD	A	30n	TTL	.80	2.0	0.0	5.0	5 m	5	1	AD35	DL14an
6	DS75451N-8		2	300m	30	OC	700m	300m	AND	A	25n	TTL	.80	2.0	0.0	5.0	325m	0	7	AD1	DL8r
7	DS75452N-8		2	300m	30	OC	700m	300m	NAND	A	35n	TTL	.80	2.0	0.0	5.0	355m	0	7	AD2	DL8r
8	DS75453N-8		2	300m	30	OC	700m	300m	OR	A	25n	TTL	.80	2.0	0.0	5.0	340m	0	7	AD3	DL8r
9	DS75454N-8		2	300m	30	OC	700m	300m	NOR	A	35n	TTL	.80	2.0	0.0	5.0	395m	0	7	AD4	DL8r
10	SFC5450AE		2	300m	30	IT	700m	300m	NAAD	T	20n	TTL	.80	2.0	0.0	5.0	800m	0	7	AD35	TO116
11	SFC5451AD		2	300m	30	OC	700m	300m	AND	T	45n	TTL	.80	2.0	0.0	.25	800m	0	7	AD1	DL8o
12	55461HM		2	300m	35	OC	800m	300m	AND	A	55n	TTL	.80	2.0	0.0	5.0	380m	5	1	AD1	TO99
13	55461RM		2	300m	35	OC	800m	300m	AND	A	55n	TTL	.80	2.0	0.0	5.0	380m	5	1	AD1	DL8f
14	55462HM		2	300m	35	OC	800m	300m	NAND	A	65n	TTL	.80	2.0	0.0	5.0	380m	5	1	AD109a	TO99
15	55462RM		2	300m	35	OC	800m	300m	NAND	A	65n	TTL	.80	2.0	0.0	5.0	380m	5	1	AD2	DL8f
16	55463HM		2	300m	35	OC	800m	300m	OR	A	55n	TTL	.80	2.0	0.0	5.0	380m	5	1	AD109d	TO99
17	55463RM		2	300m	35	OC	800m	300m	OR	A	55n	TTL	.80	2.0	0.0	5.0	380m	5	1	AD3	DL8f
18	55464HM		2	300m	35	OC	800m	300m	NOR	A	65n	TTL	.80	2.0	0.0	5.0	425m	5	1	AD109c	TO99
19	55464RM		2	300m	35	OC	800m	300m	NOR	A	65n	TTL	.80	2.0	0.0	5.0	425m	5	1	AD4	DL8f
20	75461HC		2	300m	35	OC	700m	300m	AND	A	55n	TTL	.80	2.0	0.0	5.0	380m	0	7	AD1	TO99
21	75461RC		2	300m	35	OC	700m	300m	AND	A	55n	TTL	.80	2.0	0.0	5.0	380m	0	7	AD1	DL8f
22	75462HC		2	300m	35	OC	700m	300m	NAND	A	65n	TTL	.80	2.0	0.0	5.0	380m	0	7	AD109a	TO99
23	75462RC		2	300m	35	OC	700m	300m	NAND	A	65n	TTL	.80	2.0	0.0	5.0	380m	0	7	AD2	DL8f
24	75463HC		2	300m	35	OC	700m	300m	OR	A	55n	TTL	.80	2.0	0.0	5.0	380m	0	7	AD109d	TO99
25	75463RC		2	300m	35	OC	700m	300m	OR	A	55n	TTL	.80	2.0	0.0	5.0	380m	0	7	AD3	DL8f
26	75463TC		2	300m	35	OC	700m	300m	OR	A	55n	TTL	.80	2.0	0.0	5.0	380m	0	7	AD3	DL8q
27	75464HC		2	300m	35	OC	700m	300m	NOR	A	65n	TTL	.80	2.0	0.0	5.0	425m	0	7	AD109c	TO99
28	75464RC		2	300m	35	OC	700m	300m	NOR	A	65n	TTL	.80	2.0	0.0	5.0	425m	0	7	AD4	DL8f
29	75464TC		2	300m	35	OC	700m	300m	NOR	A	65n	TTL	.80	2.0	0.0	5.0	425m	0	7	AD4	DL8q
30	DS75461N-8		2	300m	35	OC	700m	300m	AND	A	55n	TTL	.80	2.0	0.0	5.0	380m	0	7	AD1	DL8r
31	DS75462N-8		2	300m	35	OC	700m	300m	NAND	A	65n	TTL	.80	2.0	0.0	5.0	380m	0	7	AD2	DL8r
32	DS75463N-8		2	300m	35	OC	700m	300m	OR	A	55n	TTL	.80	2.0	0.0	5.0	380m	0	7	AD3	DL8r
33	DS75464N-8		2	300m	35	OC	700m	300m	NOR	A	65n	TTL	.80	2.0	0.0	5.0	425m	0	7	AD4	DL8r
34	55460DM		2	300m	40	IT	800m	300m	NAND	A	65n	TTL	.80	2.0	0.0	5.0	5 m	5	1	AD35	DL14ao
35	55460FM		2	300m	40	IT	800m	300m	NAAD	A	65n	TTL	.80	2.0	0.0	5.0	5 m	5	1	AD35	TO86
36	55471HM		2	300m	40	OC	800m	300m	AND	A	65n	TTL	.80	2.0	0.0	5.0	380m	5	1	AD1	TO99
37	55471RM		2	300m	40	OC	800m	300m	AND	A	65n	TTL	.80	2.0	0.0	5.0	380m	5	1	AD1	DL8f
38	55472HM		2	300m	40	OC	800m	300m	NAND	A	75n	TTL	.80	2.0	0.0	5.0	380m	5	1	AD109a	TO99
39	55472RM		2	300m	40	OC	800m	300m	NAND	A	75n	TTL	.80	2.0	0.0	5.0	380m	5	1	AD2	DL8f
40	55473HM		2	300m	40	OC	800m	300m	OR	A	65n	TTL	.80	2.0	0.0	5.0	380m	5	1	AD109d	TO99
41	55473RM		2	300m	40	OC	800m	300m	OR	A	65n	TTL	.80	2.0	0.0	5.0	380m	5	1	AD3	DL8f
42	55474HM		2	300m	40	OC	800m	300m	OR	A	65n	TTL	.80	2.0	0.0	5.0	380m	5	1	AD109c	TO99
43	55474RM		2	300m	40	OC	800m	300m	NOR	A	65n	TTL	.80	2.0	0.0	5.0	425m	5	1	AD4	DL8f
44	75460DC		2	300m	40	IT	700m	300m	NAND	A	65n	TTL	.80	2.0	0.0	5.0	5 m	0	7	AD35	DL14ao
45	75460PC		2	300m	40	IT	700m	300m	NAND	A	65n	TTL	.80	2.0	0.0	5.0	5 m	0	7	AD35	DL14bn
46	75471HC		2	300m	40	OC	700m	300m	AND	A	65n	TTL	.80	2.0	0.0	5.0	380m	0	7	AD1	TO99
47	75471RC		2	300m	40	OC	700m	300m	AND	A	65n	TTL	.80	2.0	0.0	5.0	380m	0	7	AD1	DL8f
48	75472HC		2	300m	40	OC	700m	300m	NAND	A	75n	TTL	.80	2.0	0.0	5.0	380m	0	7	AD109a	TO99
49	75472RC		2	300m	40	OC	700m	300m	NAND	A	75n	TTL	.80	2.0	0.0	5.0	380m	0	7	AD2	DL8f
50	75473HC		2	300m	40	OC	700m	300m	OR	A	65n	TTL	.80	2.0	0.0	5.0	380m	0	7	AD109d	TO99
51	75473RC		2	300m	40	OC	700m	300m	OR	A	65n	TTL	.80	2.0	0.0	5.0	380m	0	7	AD3	DL8f
52	75473TC		2	300m	40	OC	700m	300m	OR	A	65n	TTL	.80	2.0	0.0	5.0	380m	0	7	AD3	DL8q
53	75474HC		2	300m	40	OC	700m	300m	OR	A	65n	TTL	.80	2.0	0.0	5.0	380m	0	7	AD109c	TO99
54	75474RC		2	300m	40	OC	700m	300m	NOR	A	65n	TTL	.80	2.0	0.0	5.0	425m	0	7	AD4	DL8f
55	75474TC		2	300m	40	OC	700m	300m	NOR	A	65n	TTL	.80	2.0	0.0	5.0	425m	0	7	AD4	DL8q
56	DS55460J		2	300m	40	IT	800m	300m	NAAD	A	65n	TTL	.80	2.0	0.0	5.0	5 m	5	1	AD35	DL14an
57	DS75460J		2	300m	40	IT	700m	300m	NAAD	A	65n	TTL	.80	2.0	0.0	5.0	5 m	0	7	AD35	DL14an
58	DS75460N		2	300m	40	IT	700m	300m	NAAD	A	65n	TTL	.80	2.0	0.0	5.0	5 m	0	7	AD35	DL14o
59	55470DM		2	300m	50	IT	800m	300m	NAAD	A	75n	TTL	.80	2.0	0.0	5.0	5 m	5	1	AD35	DL14ao
60	55470FM		2	300m	50	IT	800m	300m	NAAD	A	75n	TTL	.80	2.0	0.0	5.0	5 m	5	1	AD35	TO86
61	75470DC		2	300m	50	IT	700m	300m	NAAD	A	75n	TTL	.80	2.0	0.0	5.0	5 m	0	7	AD35	DL14ao
62	75470PC		2	300m	50	IT	700m	300m	NAAD	A	75n	TTL	.80	2.0	0.0	5.0	5 m	0	7	AD35	DL14bn
63	DS1686J		2	300m	56	OC	1.1	300m	NAND	X	1.0u	TTL	.80	2.0	0.0	5.0	140m	5	1	AD49a	DL14an
64	DS1687J		2	300m	56	OC	1.1	300m	NAND	X	1.0u	TTL	.80	2.0	0.0	5.0	140m	5	1	AD54	DL14an
65	DS3686J		2	300m	56	OC	1.1	300m	NAND	X	1.0u	TTL	.80	2.0	0.0	5.0	140m	0	7	AD49a	DL14an
66	DS3686N-8		2	300m	56	OC	1.2	300m	NAND	X	1.0u	TTL	.80	2.0	0.0	5.0	140m	0	7	AD49a	DL8r
67	DS3687J		2	300m	56	OC	1.1	300m	NAND	X	1.0u	TTL	.80	2.0	0.0	5.0	140m	0	7	AD54	DL14an
68	DS3687N-8		2	300m	56	OC	1.2	300m	NAND	X	1.0u	TTL	.80	2.0	0.0	5.0	140m	0	7	AD54	DL8r
69	DS3611N-8		2	300m	80	OC	700m	300m	AND	A	130n	TTL	.80	2.0	0.0	5.0	345m	0	7	AD1	DL8r
70	DS3611T		2	300m	80	OC	700m	300m	AND	A	130n	TTL	.80	2.0	0.0	5.0	345m	0	7	AD2	CN12
71	DS3612N-8		2	300m	80	OC	700m	300m	NAND	A	110n	TTL	.80	2.0	0.0	5.0	355m	0	7	AD2	DL8r
72	DS3612T		2	300m	80	OC	700m	300m	NAND	A	110n	TTL	.80	2.0	0.0	5.0	355m	0	7	AD1	CN12
73	DS3613N-8		2	300m	80	OC	700m	300m	OR	A	125n	TTL	.80	2.0	0.0	5.0	365m	0	7	AD3	DL8r
74	DS3613T		2	300m	80	OC	700m	300m	OR	A	125n	TTL	.80	2.0	0.0	5.0	365m	0	7	AD4	CN12
75	DS3614N-8		2	300m	80	OC	700m	300m	NOR	A	220n	TTL	.80	2.0	0.0	5.0	395m	0	7	AD4	DL8r
76	DS3614T		2	300m	80	OC	700m	300m	NOR	A	220n	TTL	.80	2.0	0.0	5.0	395m	0	7	AD3	CN12
77	SN75401ND		2	700m	35	OC	1.0	500m	AND	A	55n	TTL	.80	2.0	0.0	5.0	380m	0	7	AD40	D14-6
78	M54501Y		2	1.0	30	OE	750m	500m	AND	T		TTL	.80	2.0	0.0	5.0	1.1	0	7	AD46	CN5
79	UHC060		2	1.0	50	OC	1.5	750m	INV	D	150n	TTL			0.0	50	500u	0	7	AD29	CN1
80	UHD060		2	1.0	50	OC	1.5	750m	INV	D	150n	TTL			0.0	50	500u	0	7	AD29a	D14-3
81	UHP060		2	1.0	50	OC	1.5	750m	INV	D	150n	TTL			0.0	50	500u	0	7	AD29a	DL14a
82	M54520K		6		14	RP	1.4	50m	INV	M	100n	TTL	1.4		0.0	5.0	100m	0	7	AD45	DL16f

SYMBOLS AND CODES EXPLAINED IN INTERPRETER

6. DISPLAY DRIVERS

IN ORDER OF: (1)TECH (2)FUNCS (3)READ OUT (4)NO LINES & (5)TYPE NUMBER

LINE No.	5 TYPE NUMBER	DATA SHT.	2 F UNCS	3 READ OUT	OUTPUT CAPABILITY OC UO TN PN	4 NO LINE	MIN OUTPUT SINK CURR. (A)	° OUT (V)	ABS. MAX VOLT (V)	MAX PROP DELAY tpd (S)	1 TECH	INPUT LOGIC LEVELS MAX '0' (V)	MIN '1' (V)	RATED PWR SUPPLY SPAN NEG (V)	POS (V)	MAX. OPER. POWER DISS. (W)	OPER TEMP RANGE CODE -	+	DRAWINGS LOGIC OR BLOCK	OUTLINE Δ=MO
1	SDA5680A		A	C	OC	1			6.0			.20	2.4	0.0	5.0		0	7		
2	SDA5680B		A	C	OC	1			6.0			.20	2.4	0.0	5.0		0	7		
3	SG6118		A	F	AH	8	25m	80	85					0.0	80	1.0	0	8	AE1b	
4	NE580F		A	G	RP	2	1.6m	.40	5.0					0.0	5.0	250m	0	7	AE160	DL22h
5	NE580N		A	G	RP	2	1.6m	.40	5.0					0.0	5.0	250m	0	7	AE160	DL22g
6	D140CJ		A	L	OC	6	90m	.40	6.0	250n		.20	1.8	0.0	3.0	470m	0	7	AA50g	DL16ca
7	DS8667N		A	L	OC	8			10				4.9	0.0	6.0	900	0	7	AE53	DL18j
8	ITT558-5N		A	L	OC	9	40m		10								0	7		
9	DS8693N		A	T	OC	7	20m		12	10u		.40		0.0	10		0	7	AE176b	DL22e
10	DS8694N		A	T	OC	8	20m		12	10u		.40		0.0	10		0	7	AE176c	DL24ao
11	LB1470		AB	G	OC	16			16					0.0	12	500m	3	7	AE144	D22-1c
12	SDA2004		AB	L	AH	1			8.0			.80	5.1	0.0	6.0		0	7		
13	DS8968J		AB	L	OC	12	200m	.90	9.0			.90		0.0	9.5	332m	0	7	AE54	DL18m
14	DS8968N		AB	L	OC	12	200m	.90	9.0			.90		0.0	9.5	332m	0	7	AE54	DL18m
15	DS7664N		AB	L	OC	14	80m	.50	10	500n		.50	.50	0.0	4.0	88m	5	C	AE165	DL24ao
16	DS8665N		AB	L	OC	14	40u	.40	10	500n		.30	.50	0.0	8.4	294m	0	7	AE166	DL24ao
17	DD704		ABC	G	AL	7	4.0m	4.0	80	10u		.80	2.0	0.0	15	240m	0	7	AE180	D18-20
18	DS8980J		ABC	G	OC	7			80	10u		.80	2.0	0.0	15	300m	0	7	AE178	DL18m
19	DS8980N		ABC	G	OC	7			80	10u		.80	2.0	0.0	15	300m	0	7	AE178	DL18j
20	DS8981J		ABC	G	OC	7			80	10u		.80	2.0	0.0	15	300m	0	7	AE178	DL18m
21	DS8981N		ABC	G	OC	7			80	10u		.80	2.0	0.0	15	300m	0	7	AE178	DL18j
22	MD4311BC		ABC	CLGI	ED	7	25m	1.2	18	900n	BMS	.01	9.1	0.0	10	10m	4	8	AE135	DL∅
23	MD4311BE		ABC	CLGI	ED	7	25m	1.2	18	900n	BMS	.01	9.1	0.0	10	10m	4	8	AE135	DL∅
24	MD4311BF		ABC	CLGI	ED	7	25m	1.2	18	600n	BMS	.01	9.1	0.0	10	1.0m	5	C	AE135	DL∅
25	MD4311BH		ABC	CLGI	ED	7	25m	1.2	18	900n	BMS	.01	9.1	0.0	10	10m	4	8	AE135	DL∅
26	MD4311BI		ABC	CLGI	ED	7	25m	1.2	18	600n	BMS	.01	9.1	0.0	10	1.0m	5	C	AE135	CH∅
27	MD4368BC		ABC	CLGI	ED	7	25m	1.9	18	180n	BMS	.05	9.5	0.0	10	1.0m	4	8	AE136	DL∅
28	MD4368BE		ABC	CLGI	ED	7	25m	1.9	18	180n	BMS	.05	9.5	0.0	10	1.0m	4	8	AE136	DL∅
29	MD4368BER		ABC	CLGI	ED	7	25m	1.9	18	180n	BMS	.05	9.5	0.0	10	1.0m	4	8	74-48	DL∅
30	SIL4511BC		ABC	CLGI	ED	7	25m	1.2	18	900n	BMS	.01	9.1	0.0	10	10m	4	8	45-11B	DL∅
31	SIL4511BE		ABC	CLGI	ED	7	25m	1.2	18	900n	BMS	.01	9.1	0.0	10	10m	4	8	45-11B	DL∅
32	SIL4511BF		ABC	CLGI	ED	7	25m	1.2	18	600n	BMS	.01	9.1	0.0	10	1.0m	5	C	45-11B	DL∅
33	SIL4511BH		ABC	CLGI	ED	7	25m	1.2	18	900n	BMS	.01	9.1	0.0	10	10m	4	8	AE135	DL∅
34	SIL4511BI		ABC	CLGI	ED	7	25m	1.2	18	600n	BMS	.01	9.1	0.0	10	1.0m	5	C	AE135	CH∅
35	SAB3211Z		ABC	L					18		BMS	8	13	0.0	18	500m	0	7		
36	55492ADM		A	IL	OC	6	250m	1.2	20	300n	BPR	2.0		0.0	20	20m	5	C	75-492N	DL14ao
37	55492DM		A	IL	OC	6	250m	1.2	10	300n	BPR	2.0		0.0	10	10m	5	C	AE16	DL14ao
38	75492ADC		A	IL	OC	6	250m	1.2	20	300n	BPR	1.5		0.0	20	20m	0	7	AE16	DL14ao
39	75492APC		A	IL	OC	6	250m	1.2	20	300n	BPR	1.5		0.0	20	20m	0	7	AE16	DL14bn
40	75492DC		A	IL	OC	6	250m	1.2	10	300n	BPR	1.5		0.0	10	10m	0	7	AE16	DL14ao
41	55491ADM		A	L	OC	4	50m	1.2	20	100n	BPR	2.0		0.0	20	20m	5	C	AE15	DL14ao
42	55491DM		A	L	OC	4	50m	1.2	10	100n	BPR	2.0		0.0	10	10m	5	C	75-491N	DL14ao
43	75491ADC		A	L	OC	4	50m	1.2	20	100n	BPR	1.5		0.0	20	20m	0	7	AE15	DL14ao
44	75491APC		A	L	OC	4	50m	1.2	20	100n	BPR	1.5		0.0	20	20m	0	7	AE15	DL14bn
45	75491DC		A	L	OC	4	50m	1.2	10	100n	BPR	1.5		0.0	10	10m	0	7	AE15	DL14ao
46	LM8521		A	LF					300m		BPR	7.0	.80	16	.30	800m	3	6		
47	AND601		AB	L		10	7.0m				BPR	1.0	11.9	0.0	12	500m	3	7	AE183	DL16dx
48	SCL5337		A	C	DC				15		CMS			0.0	10	300m	0	5		
49	CD4054BY		A	C	DC	4	3.0m	1.5	20	500n	CMS	.05	14.9	0.0	15	500m	4	8	40-54B	Δ001AC
50	HLCD0541D		A	C		23					CMS	1.25	3.75	.3	17	250m	5	C	AE332	DL40∅
51	HLCD0541P		A	C		23					CMS	1.25	3.75	.3	17	250m	4	8	AE332	DL40∅
52	HLCD0540D		A	C		32					CMS	1.25	3.75	.3	15	250m	5	C	AE265	DL40∅
53	HLCD0540P		A	C		32					CMS	1.25	3.75	.3	15	250m	4	8	AE265	DL40∅
54	HLCD0542D		A	C		32					CMS	1.25	3.75	.3	17	250m	5	C	AE333	DL40∅
55	HLCD0542P		A	C		32					CMS	1.25	3.75	.3	17	250m	4	8	AE333	DL40∅
56	HLCD0548D		A	C		32					CMS	1.25	3.75	.3	17	250m	5	C	AE331	DL40∅
57	HLCD0548P		A	C		32					CMS	1.25	3.75	.3	17	250m	4	8	AE331	DL40∅
58	uA438JC		A	C	BU	32				500n	CMS			0.0	15.0		3	7	AE270	DL40ak
59	DD7218AC		A	L		4			6.0		CMS	.40	2.4	5.0	5.0	1.0	2	7	AE195	DL28ag
60	DD7218BC		A	L		4			6.0		CMS	.40	2.4	5.0	5.0	500m	2	7	AE195	DL28ag
61	DD7218CC		A	L		4			6.0		CMS	.40	2.4	5.0	5.0	1.0	2	7	AE195	DL28ag
62	DD7218DC		A	L		4			6.0		CMS	.40	2.4	5.0	5.0	500m	2	7	AE195	DL28ag
63	MCC1486		A	L	OC	4	56m	.40	5.0	10u	CMS	.40	3.0	0.0	5.0	21m	0	7	AE75	CH11a
64	MCC1487		A	L	OC	4	70m	.40	5.0	10u	CMS	.40	3.0	0.0	5.0	21m	0	7	AE76	CH11
65	DD7218EC		A	L		15			6.0		CMS	.40	2.4	5.0	5.0	1.0	2	7	AE195	DL40f
66	CD4055BY		AB	C	DC	7	3.0m	1.5	20	750n	CMS	.05	14.9	0.0	15	500m	4	8	40-55B	Δ001AC
67	CD4056BY		AB	C	DC	7	3.0m	1.5	20	750n	CMS	.05	14.9	0.0	15	500m	4	8	40-56B	Δ001AC
68	UCN4102A		AB	CLGI	AH	7	500u	1.0	20		CMS	4.0	11	0.0	15		0	7	AE117a	DL16a
69	TC5042BP		AB	L	OE	7	30m	1.5	15	320n	CMS	4.0	11	0.0	15	300m	4	8	AE192	
70	SFF25306		AB	L2	AH	7	15	15	34		CMS	4.5	10.5	0.0	15	500m	4	8	AE130	DL28o
71	SFF25307		AB	L2	AH	7	15	15	34		CMS	4.5	10.5	0.0	15	500m	4	8	AE130a	DL24ap
72	SFF25308		AB	L2	AH	7	15	15	34		CMS	4.5	10.5	0.0	15	500m	4	8	AE130b	DL24ap
73	SCL4511BF		ABC	CFIL	DC	7	11m	1.5	18	400n	CMS	4.0	11	0.0	15	300m	5	C	45-11B	F16-12
74	SCL4543BF		ABC	CFILG	DC	7	3.4m	1.5	18	320n	CMS	4.0	11	0.0	15	300m	5	C	45-43B	F16-12
75	CD4511BK		ABC	CLGI	AH	7	3.4m	1.5	20	360n	CMS	4.0	11	0.0	15	300u	5	C	45-11B	Δ004AG
76	MD4511BC		ABC	CLGI	DC	7	400u	.40	18	1.5u	CMS	0.1	9.1	0.0	15	25m	5	C	AE135	DL∅
77	MD4511BE		ABC	CLGI	DC	7	200u	.40	18	2.2u	CMS	.01	9.1	0.0	15	25n	4	8	AE135	DL16∅
78	MD4511BH		ABC	CLGI	DC	7	200u	.40	18	1.5u	CMS	.01	9.1	0.0	15	25n	4	8	45-11B	CH∅
79	MD4511BI		ABC	CLGI	DC	7	400u	.40	18	1.5u	CMS	.01	9.1	0.0	15	25n	5	C	45-11B	CH∅
80	HEF4511P		ABC	L	AH	7	2.0m	.50	15		CMS	3.0	7.0	0.0	10	400m	4	8	AE97	DL16h
81	MC14495L		ABC	L	EC	7	7.5m	12	12		CMS	.80	4.0	0.0	15	450m	4	8	AE156	DL16au
82	MC14495P		ABC	L	EC	7	7.5m	12	12		CMS	.80	4.0	0.0	15	450m	4	8	AE156	DL16ai
83	SCL4426ABC		ABD	FIL	DC	7	1.2m	1.5	18	400n	CMS	3.75	11.2	0.0	15	300m	5	C	44-26A	DL16v
84	SCL4426ABF		ABD	FIL	DC	7	1.2m	1.5	18	400n	CMS	3.75	11.2	0.0	15	300m	5	C	AE139	F16-12
85	SCL4433ABC		ABD	FIL	DC	7	1.2m	1.5	18	400n	CMS	3.75	11.2	0.0	15	300m	5	C	44-33A	DL16v
86	SCL4433ABF		ABD	FIL	DC	7	1.2m	1.5	18	400n	CMS	3.75	11.2	0.0	15	300m	5	C	44-33A	F16-12
87	DF411CJ		AB4	C	AH	7	5.0m	5.5	8.3	1.4u	CMS	.50	5.5	0.0	6.0	450m	0	7	AE131	DL40p
88	MD4330BD		AS	C	DC	30	250u	.50	18	300n	CMS	.01	9.99	0.0	10	1.0m	5	C	AE133	DL40o
89	MD4330BM		AS	C	DC	30	250u	.50	18	300n	CMS	.01	9.99	0.0	10	1.0m	4	8	AE133	DL40o
90	MD4330BS		AS	C	DC	30	250u	.50	18	300n	CMS	.01	9.99	0.0	10	1.0m	4	8	AE133	DL∅
91	MD4331BD		AS	C	DC	30	250u	.50	18	300n	CMS	.01	9.99	0.0	10	1.0m	5	C	AE133a	DL40o
92	MD4331BE		AS	C	DC	30	250u	.50	18	300n	CMS	.01	9.99	0.0	10	1.0m	4	8	AE133a	DL40o
93	MD4331BM		AS	C	DC	30	250u	.50	18	300n	CMS	.01	9.99	0.0	10	1.0m	4	8	AE133a	DL40o
94	MD4331BS		AS	C	DC	30	250u	.50	18	300n	CMS	.01	9.99	0.0	10	1.0m	4	8	AE133a	DL∅
95	MD4332BD		AS	C	DC	32	250u	.50	18	300n	CMS	.01	9.99	0.0	10	1.0m	5	C	AE134	DL40o
96	MD4332BM		AS	C	DC	32	250u	.50	18	300n	CMS	.01	9.99	0.0	10	1.0m	4	8	AE134	DL40o
97	MD4332BS		AS	C	DC	32	250u	.50	18	300n	CMS	.01	9.99	0.0	10	1.0m	4	8	AE134	DL∅
98	DD7211AC		B	C	OC				6.0		CMS	2.0	3.0	5.0	5.0	500m	2	7	AE229a	DL40t
99	DD7211AMC		B	C	OC				6.0		CMS	2.0	3.0	5.0	5.0	500m	2	7	AE229c	DL40t
100	DD7211C		B	C	OC				6.0		CMS	2.0	3.0	5.0	5.0	500m	2	7	AE229a	DL40t
101	DD7211MC		B	C	OC				6.0		CMS	2.0	3.0	5.0	5.0	500m	2	7	AE229c	DL40t
102	DD7212AC		B	L	OC				6.0		CMS	2.0	3.0	5.0	5.0	500m	2	7	AE229	DL40t
103	DD7212AMC		B	L	OC				6.0		CMS	2.0	3.0	5.0	5.0	500m	2	7	AE229b	DL40t
104	DD7212C		B	L	OC				6.0		CMS	2.0	3.0	5.0	5.0	500m	2	7	AE229	DL40t
105	DD7212MC		B	L	OC				6.0		CMS	2.0	3.0	5.0	5.0	500m	2	7	AE229b	DL40t
106	MD4055BC		BA	C	AH	7	3.0m	.50	15	1.2u	CMS	.01	14.9	0.0	15	300u	4	8	AE70	DL16∅
107	MD4055BE		BA	C	AH	7	3.0m	.50	18	1.2u	CMS	0.1	9.99	0.0	1.0	100u	4	8	AE70	DL16∅
108	MD4055BF		BA	C	AH	7	3.0m	.50	15	900n	CMS	.01	14.9	0.0	15	300u	5	C	AE70	DL16∅
109	MD4056BC		BA	C	AH	7	3.0m	.50	15	1.2u	CMS	.01	14.9	0.0	15	300u	4	8	AE71	DL16∅
110	MD4056BE		BA	C	AH	7	3.0m	.50	18	1.2u	CMS	0.1	9.99	0.0	1.0	100u	4	8	AE71	DL16∅

SYMBOLS AND CODES EXPLAINED IN INTERPRETER

6. DISPLAY DRIVERS

IN ORDER OF: (1)TECH (2)FUNCS (3)READ OUT (4)NO LINES & (5)TYPE NUMBER

LINE No.	5 TYPE NUMBER	DATA SHT.	2 FUNCS	3 READ OUT	OUTPUT CAPABILITY OC UO TN PN	4 NO LINE	MIN OUTPUT SINK CURR. (A)	° OUT (V)	ABS. MAX VOLT (V)	MAX PROP DELAY tpd (S)	1 TECH	INPUT LOGIC LEVELS MAX '0' (V)	MIN '1' (V)	RATED PWR SUPPLY SPAN NEG (V)	POS (V)	MAX. OPER. POWER DISS. (W)	OPER TEMP RANGE CODE -	+	DRAWINGS LOGIC OR BLOCK	OUTLINE Δ=MO
1	MD4056BF		BA	C	AH	7	3.0m	.50	15	900n	CMS	.01	14.9	0.0	15	300u	5	C	AE71	DL16Ø
2	SCL4026ABF		BD	FIL	DC	7	1.1m	1.5	18	400n	CMS	3.75	11.2	0.0	15	300m	5	C	40-26B	F16-12
3	SCL4033ABF		BD	FIL	DC	7	1.1m	1.5	18	400n	CMS	3.75	11.2	0.0	15	300m	5	C	40-33B	F16-12
4	CD7224AC		D	C	3S				6.0		CMS	2.0	3.0	5.0	5.0	500m	2	7	AE226	DL40t
5	CD7224C		D	C	3S				6.0		CMS	2.0	3.0	5.0	5.0	500m	2	7	AE226	DL40t
6	CD7216AC		D	L	3S		25m	1.5	6.0		CMS	.80	2.0	5.0	5.0	1.0	2	7	AE224	DL28p
7	CD7216BC		D	L	3S		50m	1.0	6.0		CMS	.80	2.0	5.0	5.0	500m	2	7	AE224a	DL28j
8	CD7216CC		D	L	3S		25m	1.5	6.0		CMS	.80	2.0	5.0	5.0	1.0	2	7	AE224b	DL28p
9	CD7216DC		D	L	3S		50m	1.0	6.0		CMS	.80	2.0	5.0	5.0	500m	2	7	AE224c	DL28j
10	CD7217AC		D	L	3S				6.0		CMS	.80	2.0	5.0	5.0	500m	2	7	AE225a	DL28am
11	CD7217BC		D	L	3S				6.0		CMS	.80	2.0	5.0	5.0	1.0	2	7	AE225	DL28ag
12	CD7217C		D	L	3S				6.0		CMS	.80	2.0	5.0	5.0	1.0	2	7	AE225	DL28ag
13	CD7217CC		D	L	3S				6.0		CMS	.80	2.0	5.0	5.0	500m	2	7	AE225a	DL28am
14	CD7225AC		D	L	3S				6.0		CMS	2.0	3.0	5.0	5.0	500m	2	7	AE227	DL40t
15	CD7225C		D	L	3S				6.0		CMS	2.0	3.0	5.0	5.0	500m	2	7	AE227	DL40t
16	CD7226AC		D	L	3S		.40m	.40	6.0		CMS	1.0	3.5	5.0	5.0	1.0	2	7	AE228	DL40i
17	CD7226BC		D	L	3S		.40m	.40	6.0		CMS	1.0	3.5	5.0	5.0	500m	2	7	AE228a	DL40t
18	CD7227AC		D	L	3S				6.0		CMS	.80	2.0	5.0	5.0	500m	2	7	AE225c	DL28am
19	CD7227BC		D	L	3S				6.0		CMS	.80	2.0	5.0	5.0	1.0	2	7	AE225b	DL28ag
20	CD7227C		D	L	3S				6.0		CMS	.80	2.0	5.0	5.0	1.0	2	7	AE225b	DL28ag
21	CD7227CC		D	L	3S				6.0		CMS	.80	2.0	5.0	5.0	500m	2	7	AE225c	DL28am
22	SW729-1F		A	I	OC	2	100m	.80	8.0		DTL	1.2	1.8	0.0	5.0	100m	5	C	AE74	F14-4b
23	SW729-1P		A	I	OC	2	100m	.80	8.0		DTL	1.2	1.8	0.0	5.0	100m	5	C	AE74	D14-1d
24	SW729-1S		A	I	OC	2	100m	.80	8.0		DTL	1.2	1.8	0.0	5.0	100m	5	C	AE74	CNØ
25	SW729-1T		A	I	OC	2	100m	.80	8.0		DTL	1.2	1.8	0.0	5.0	100m	5	C	AE74	CNØ
26	SW729-2F		A	I	OC	2	100m	.80	8.0		DTL	1.2	1.8	0.0	5.0	100m	0	7	AE74	F14-4b
27	SW729-2P		A	I	OC	2	100m	.80	8.0		DTL	1.2	1.8	0.0	5.0	100m	0	7	AE74	D14-1d
28	SW729-2S		A	I	OC	2	100m	.80	8.0		DTL	1.2	1.8	0.0	5.0	100m	0	7	AE74	CNØ
29	SW729-2T		A	I	OC	2	100m	.80	8.0		DTL	1.2	1.8	0.0	5.0	100m	0	7	AE74	CNØ
30	380BL		AB	I	OC	10	30m	1.2	18	500n	DTL	5.0	6.5	0.0	12	360m	5	C	AE6	DL16c
31	380ML		AB	I	OC	10	30m	1.2	18	500n	DTL	5.0	6.5	0.0	15	570m	5	C	AE6	DL16c
32	381BL		AB	I	OC	10	16m	1.5	18	500n	DTL	5.0	6.5	0.0	12	360m	5	C	AA54a	DL16c
33	381ML		AB	I	OC	10	20m	1.8	18	500n	DTL	5.0	6.5	0.0	15	570m	5	C	AE6	DL16c
34	382BL		B	G	OC	10	7.0m	2.5	18		DTL	5.0	6.5	0.0	12	288m	5	C	3-82C	DL16c
35	382ML		B	G	OC	10	7.0m	2.5	18		DTL	5.0	6.5	0.0	15	465m	5	C	3-82C	DL16c
36	MC1045P		AB	G	OC	10	100u	80	80		ECL	-1.3	-1.0	5.2	0.0	178m	0	7	AE86	DL16ad
37	MC1245F		AB	G	OC	10	100u	80			ECL	-1.3	-1.0	5.2	0.0	178m	5	C	AE86	F16-11
38	MC1245L		AB	G	OC	10	100u	80	80		ECL	-1.3	-1.0	5.2	0.0	178m	5	C	AE86	DL16at
39	MC75491L		A	L	OE	4	50m	1.2	10	40n	MOS		10	0.0	10	830m	0	7	AE15	TO116
40	MC75492L		A	L	OC	6	250m	1.2	10	80n	MOS	1.2	10	0.0	10	830m	0	7	AE16	TO116
41	M004T1		BCF	G	OC	10				1.0u	MOS	.80	3.5	12	5.0	300m	0	7	AE68	D40-4
42	M004T2		BCF	G	OC	10				1.0u	MOS	.80	3.5	12	5.0	300m	5	C	AE68	D40-4
43	AY5-4007		ABD	FL	OC	7	25m	1.0		1.5u	PMS	.80	3.5	12	5.0	1.4	0	7	AE172b	DL24bm
44	AY5-4007A		ABD	FL	OC	7	25m	1.0		1.5u	PMS	.80	3.5	12	5.0	1.4	0	7	AE172	DL40d
45	AY5-4007D		ABD	FL	OC	7	25m	1.0		1.5u	PMS	.80	3.5	12	5.0	1.4	0	7	AE172a	DL24bm
46	MK5007N#		BCD		BU		500u	4.2	4.2		PMS	.80	4.0	0.0	5.0	25m	0	7	E11-49	DL16ax
47	MK5002N#		BCD		BU	7	500u	4.2	4.2		PMS	.80	4.0	0.0	5.0	25m	0	7	E11-47	DL28k
48	MK5005N#		BCD		BU	7	500u	4.2	4.2		PMS	.80	4.0	0.0	5.0	25m	0	7	E11-48	D24-45
49	MK5007P		BD	CL4	BU	9			4.8		PMS	.80	4.0	0.0	5.0	25m	0	7	E11-49	DL16cv
50	MK5005P		BD	CL4	BU	13			4.8		PMS	.80	4.0	0.0	5.0	25m	0	7	E11-48	DL24bc
51	MK5002P		BD	CL4	BU	17			4.8		PMS	.80	4.0	0.0	5.0	25m	0	7	E11-47	DL16dc
52	MK50398N		BD	CL6	OC	7					PMS	3.0	14	0.0	15	670m	0	7	AE198	DL28k
53	MK50399N		BD	CL6	OC	7					PMS	3.0	14	0.0	15	670m	0	7	AE199	DL28k
54	MK50395N		BD	L	OC	7					PMS	3.0	14	0.0	15	670m	0	7	E11-44	DL40g
55	MK50396N		BD	L	OC	7					PMS	3.0	14	0.0	15	670m	0	7	E11-44	DL40g
56	MK50397N		BD	L	OC	7					PMS	3.0	14	0.0	15	670m	0	7	E11-44	DL40g
57	UDN6144A		A	G	AH	4	20m	108	120		RTL	.50	6.0	0.0	110	82m	0	7	AE1	DL14bh
58	BD5030		A	L	OC	4	70m	.40	5.0	10u	RTL	.20	1.0	0.0	3.0	3.0u	0	7	AE75	CH72
59	BD5031		A	L	OC	4	70m	.40	5.0	10u	RTL	.50	1.8	0.0	3.0	21m	0	7	AE76	CH72
60	DS8658N		A	L	OC	4	84m	.55			RTL	.40		0.0	2.9		5	7	AE42a	DL14o
61	ITT491-5N		A	L	EC	4	50m	1.2	10	100n	RTL	.70	8.5	0.0	10	800m	0	7	AE93	DL14d
62	DS8646N		A	L	OC	6	84m	.55			RTL	.40					5	7	AE173	CH43
63	ITT492-5N		A	L	OC	6	250m	1.2	10	600n	RTL	.50	6.5	0.0	7.5	800m	0	7	AE94	DL14d
64	ITT546A-5N		A	L	OC	7	40m	.55	10	5.0u	RTL	.55	9.8	0.0	10	200m	0	7	AE91	D16-2c
65	ITT508-5N		A	L	OC	8	40m	.45	10	5.0u	RTL	.45	10	0.0	10	100m	0	7	AE90	D18-1e
66	ITT509-5N		A	L	EC	8	3.0m	2.0	10	5.0u	RTL	2.0	10	0.0	10		0	7	AE90b	DL14d
67	ITT514-5N		A	L	OC	8	40m	.45	10	5.0u	RTL	.45	10	0.0	10	120m	0	7	AE90a	D18-1e
68	ITT548-5N		A	L	OC	9	60m	.30	15	5.0u	RTL	.30	5.0	0.0	10	70m	0	7	AE92	
69	DS7891J		A	G	EC	6	16m	-2.0	65		TTL	-2.0		55	0.0	3.3m	5	C	AE66	DL14an
70	DS8891J		A	G	EC	6	16m	-2.0	65		TTL	-2.0		55	0.0	3.3m	0	7	AE66	DL14an
71	DS8891N		A	G	EC	6	16m	-2.0	65		TTL	-2.0		55	0.0	3.3m	0	7	AE66	DL14o
72	DS7887J		A	G	EC	8	16m	-1.4	65	5.0u	TTL	-5.5	-2.0	60	0.0	240m	5	C	AE59	DL18ad
73	DS8887N		A	G	EC	8	16m	-1.4	65	5.0u	TTL	-5.5	-2.0	60	0.0	240m	0	7	AE59	DL18j
74	9664ADC		A	IL	OC	6	150m	1.2	20	300n	TTL	1.5		0.0	20	132m	0	7	AE16b	DL14ao
75	9664APC		A	IL	OC	6	150m	1.2	20	300n	TTL	1.5		0.0	20	132m	0	7	AE16b	DL14bn
76	9664DC		A	IL	OC	6	150m	1.2	10	300n	TTL	1.5		0.0	10	66m	0	7	AE16b	DL14ao
77	DS7895J		A	L	EC	4	12m	2.15	8.8	300n	TTL	1.3	6.5	0.0	5.0	40m	5	C	AE63	DL16g
78	DS8650		A	L	OC	4	63m	.55	5.0		TTL			0.0	2.9		5	7	AE42	CH3
79	DS8650N		A	L	OC	4	63m	.55	5.0		TTL			0.0	2.9		5	7	AE42	DL10a
80	DS8658		A	L	OC	4	84m	.55			TTL	.40		0.0	2.9		5	7	AE42a	CH5
81	DS8895J		A	L	EC	4	12m	2.15	8.8	300n	TTL	1.3	6.5	0.0	5.0	40m	0	7	AE63	DL16g
82	DS8895N		A	L	EC	4	12m	2.15	8.8	300n	TTL	1.3	6.5	0.0	5.0	40m	0	7	AE63	DL16bv
83	DS8870J		A	L	OC	6	350m	1.4	10	300n	TTL	1.4		0.0	10	10m	0	7	AE16	DL14an
84	DS8877J		A	L	OC	6	35m	.50	10		TTL	.35	5.0				0	7	AE16	DL14an
85	DS8892N		A	L	OC	6	200m	.50	8.8	1.2u	TTL	.35		0.0	6.0		0	7	AE62	DL16bv
86	9368DM		A	L		7	20m		1.7		TTL	.80	2.0	0.0	5.0	320m	5	C	74LS266N	DL16i
87	DS7856J		A	L	OC	7	6.4m	.40	5.5		TTL	.80	2.0	0.0	5.0	600m	5	C	78-58	DL16g
88	DS7856W		A	L	OC	7	6.4m	.40	5.5		TTL	.80	2.0	0.0	5.0	600m	5	C	78-256	F16-1
89	DS7858J		A	L	EC	7	50m	2.3	5.5		TTL	.80	2.0	0.0	5.0	300m	5	C	78-58	DL16g
90	DS7858W		A	L	EC	7	50m	2.3	5.5		TTL	.80	2.0	0.0	5.0	300m	5	C	78-58	F16-1
91	DS8651		A	L	OC	7	6.5m				TTL			0.0	2.7		5	7	AE43	CH4
92	DS8651N		A	L	OC	7	6.5m				TTL			0.0	2.7		5	7	AE43	DL18j
93	DS8659		A	L	OC	7	10m				TTL			0.0	2.7	40m	5	7	AE43	CH4
94	DS8659N		A	L	OC	7	10m				TTL			0.0	2.7	40m	5	7	AE43	DL18j
95	DS8844N		A	L	OC	7	50m	1.5	8.0		TTL	.40	4.5	0.0	9.5	12m	0	7	AE47	DL16bv
96	DS8856J		A	L	OC	7	6.4m	.40	5.5		TTL	.80	2.0	0.0	5.0	650m	0	7	78-58	DL16g
97	DS8856N		A	L	OC	7	6.4m	.40	5.5		TTL	.80	2.0	0.0	5.0	650m	0	7	78-58	DL16bv
98	DS8857J		A	L	EC	7	60m	2.3	5.5		TTL	.80	2.0	0.0	5.0	300m	0	7	78-58	DL16g
99	DS8858J		A	L	EC	7	50m	2.3	5.5		TTL	.80	2.0	0.0	5.0	300m	0	7	78-58	DL16g
100	DS8858N		A	L	EC	7	50m	2.3	5.5		TTL	.80	2.0	0.0	5.0	300m	0	7	78-58	DL16bv
101	DS8866N		A	L	OC	7	50m	1.5	8.0		TTL	.40	4.5	0.0	9.5	12m	0	7	AE51	DL18j
102	DS8977N		A	L	OC	7	40m	.50	8.0		TTL	.50		0.0	9.5	950u	0	7	AE51	DL18j
103	DS8865N		A	L	OC	8	50m	1.5	8.0		TTL	.40	4.5	0.0	9.5	12m	0	7	AE50	DL18j
104	UAA170L		A	L	OE	8	50m	.50	18		TTL			0.0	12		2	8	AE101	DL16ac
105	DS8647N		A	L	OC	9	7.0m	2.15			TTL	1.0	2.0	0.0	2.9	85m	0	7	AE43	DL22e
106	DS8648N		A	L	OC	9	7.0m	2.15			TTL	.40	1.9	0.0	2.9	85m	0	7	AE43a	DL22e
107	DS8855N		A	L	OC	9	50m	1.5	8.0		TTL	.40	4.5	0.0	9.5	12m	0	7	AE48	DL22a
108	DS8864N		A	L	OC	9	50m	1.5	8.0		TTL	.40	4.5	0.0	9.5	12m	0	7	AE49	DL22a
109	DS8874J		A	L	RP	9	50m	.50	10		TTL	.80	3.0	0.0	9.5	85m	0	7	AE55	DL14an
110	DS8876J		A	L	OC	9	50m	.50	10		TTL	.80	3.0	0.0	9.5	85m	0	7	AE55	DL14an

SYMBOLS AND CODES EXPLAINED IN INTERPRETER

6. DISPLAY DRIVERS

IN ORDER OF: (1)TECH (2)FUNCS (3)READ OUT (4)NO LINES & (5)TYPE NUMBER

LINE No.	5 TYPE NUMBER	DATA SHT.	2 FUNCS	3 READ OUT	OUTPUT CAPABILITY OC UOTN PN	4 NO LINE	MIN OUTPUT SINK CURR. (A)	° OUT (V)	ABS. MAX VOLT (V)	MAX PROP DELAY tpd (S)	1 TECH	INPUT LOGIC LEVELS MAX '0' (V)	MIN '1' (V)	RATED PWR SUPPLY SPAN NEG (V)	POS (V)	MAX. OPER. POWER DISS. (W)	OPER TEMP RANGE CODE -	+	DRAWINGS LOGIC OR BLOCK	OUTLINE Δ=MO
1	DS8876N		A	L	OC	9	50m	.50	10		TTL	.80	3.0	0.0	9.5	85m	0	7	AE55	DL14o
2	DS8879J		A	L	OC	9	50m	.50	10		TTL	.80	3.0	0.0	9.5	85m	0	7	AE55	DL14an
3	DS8879N		A	L	OC	9	50m	.50	10		TTL	.80	3.0	0.0	9.5	85m	0	7	AE55	DL14o
4	DS8920N		A	L	OC	9	40m	.50	8.0		TTL	.50		0.0	9.5	950u	0	7	AE50a	DL20p
5	DS8974N		A	L	OC	9	100m	.70	10		TTL	.50	3.9	0.0	5.0	30m	0	7	AE49	DL22a
6	DS8976N		A	L	OC	9	100m	.70	10		TTL	.50	3.9	0.0	5.0	30m	0	7	AE49	DL22a
7	DS8978N		A	L	OC	9	100m	.70	10		TTL	.50	3.9	0.0	5.0	30m	0	7	AE50a	DL20p
8	DS8979N		A	L	OC	9	7.0m	2.15			TTL	.40	1.9	0.0	2.9	85m	0	7	AE43a	DL22e
9	DS7654N		A	T	EC	8					TTL	.50	6.5	0.0	30	225m	5	C	AE44	DL18j
10	ITT74145J		AB		OC	10	80m		15	50n	TTL	.80	2.0	0.0	5.0	350m	0	7	74-45N	D16-2d
11	ITT74145N		AB		OC	10	80m		15	50n	TTL	.80	2.0	0.0	5.0	350m	0	7	74-45N	D16-2c
12	DD700#		AB	G		7				10u	TTL	0.8	2.0	0.0	5.0	600m	0	7	AE108	DL16ef
13	DM8880B		AB	G	AH	7	5.0m	.40	110	10u	TTL	.80	2.0	0.0	5.0	600m	0	7	AE8	DL16be
14	DS7885J		AB	G	OC	7			80	10u	TTL	.80	2.0	0.0	5.0	155m	5	C	AE58	DL16g
15	DS8880-1F		AB	G	AL	7	2.0m	2.5	100	10u	TTL	.80	2.0	0.0	5.0	215m	0	7	AE8	DL16y
16	DS8880-1N		AB	G	AL	7	2.0m	2.5	100	10u	TTL	.80	2.0	0.0	5.0	215m	0	7	AE8	DL16bk
17	MIC5441AJ		AB	G	AL	10	7.0m	2.4	70		TTL	.80	2.0	0.0	5.0	210m	5	C	74-41N	D16-7n
18	MIC7441AJ		AB	G	AL	10	7.0m	2.4	70		TTL	.80	2.0	0.0	5.0	210m	0	7	74-41N	D16-7n
19	MIC7441AN		AB	G	AL	10	7.0m	2.4	70		TTL	.80	2.0	0.0	5.0	210m	0	7	74-41N	DL16dq
20	MIC54141J		AB	G	OC	10	7.0m	.40	15		TTL	.80	2.0	0.0	5.0	80m	5	C	AE23b	DL16bg
21	MIC74141J		AB	G	OC	10	7.0m	.40	15		TTL	.80	2.0	0.0	5.0	80m	0	7	74-41N	DL16bg
22	MIC74141N		AB	G	OC	10	7.0m	.40	15		TTL	.80	2.0	0.0	5.0	80m	0	7	74-41N	DL16bg
23	SFC445E		AB	G	OC	10	20m	.40	30	50n	TTL	.80	2.0	0.0	5.0	310m	0	7	74-45N	D16-13a
24	SFC445ET		AB	G	OC	10	20m	.40	30	50n	TTL	.80	2.0	0.0	5.0	310m	2	8	74-45N	D16-13a
25	SFC4141E		AB	G	OC	10	7.0m	2.5	60		TTL	.80	2.0	0.0	5.0	125m	0	7	74-41N	D16-13a
26	SFC4145E		AB	G	OC	10	20m	.40	15	50n	TTL	.80	2.0	0.0	5.0	350m	0	7	74-45N	D16-13a
27	SFC4145ET		AB	G	OC	10	20m	.40	15	50n	TTL	.80	2.0	0.0	5.0	350m	2	8	74-45N	D16-13a
28	9307FC		AB	I		7	10m	.45		750n	TTL	.80	2.0	0.0	5.0	410m	0	7	54-48W	F16-3
29	FLL121-7446		AB	I	OC	7	20m	.40	30	100n	TTL	.80	2.0	0.0	5.0	515m	0	7	74-46N	DL16ds
30	FLL121T-7447		AB	I	OC	7	20m	.40	15	100n	TTL	.80	2.0	0.0	5.0	515m	0	7	74-46N	DL16ds
31	FLL121U-7446A		AB	I	OC	7	40m	.40	30	100n	TTL	.80	2.0	0.0	5.0	515m	0	7	74-46N	DL16ds
32	FLL121V-7447A		AB	I	OC	7	40m	.40	15	100n	TTL	.80	2.0	0.0	5.0	515m	0	7	74-46N	DL16ds
33	FLL125-8446		AB	I	OC	7	20m	.40	30	100n	TTL	.80	2.0	0.0	5.0	515m	2	8	74-46N	DL16ds
34	FLL125T-8447		AB	I	OC	7	20m	.40	15	100n	TTL	.80	2.0	0.0	5.0	515m	2	8	74-46N	DL16ds
35	FLL125U-8446A		AB	I	OC	7	40m	.40	30	100n	TTL	.80	2.0	0.0	5.0	515m	2	8	74-46N	DL16ds
36	FLL125V-8447A		AB	I	OC	7	40m	.40	15	100n	TTL	.80	2.0	0.0	5.0	515m	2	8	74-46N	DL16ds
37	MIC5446AJ		AB	I	OC	7	40m	.40	30	100n	TTL	.80	2.0	0.0	5.0	425m	5	C	74-46N	D16-7n
38	MIC5446J		AB	I	OC	7	20m	.40	30	100n	TTL	.80	2.0	0.0	5.0	380m	5	C	74-46N	D16-7n
39	MIC5447AJ		AB	I	OC	7	40m	.40	15	100n	TTL	.80	2.0	0.0	5.0	425m	5	C	74-46N	D16-7n
40	MIC5447J		AB	I	OC	7	20m	.40	15	100n	TTL	.80	2.0	0.0	5.0	380m	5	C	74-46N	D16-7n
41	MIC5448J		AB	I	OC	7	6.4m	.40	5.5	100n	TTL	.80	2.0	0.0	5.0	380m	5	C	74-48N	D16-7n
42	MIC7446AJ		AB	I	OC	7	40m	.40	30	100n	TTL	.80	2.0	0.0	5.0	515m	0	7	74-46N	D16-7n
43	MIC7446AN		AB	I	OC	7	40m	.40	30	100n	TTL	.80	2.0	0.0	5.0	515m	0	7	74-46N	DL16dq
44	MIC7446J		AB	I	OC	7	20m	.40	30	100n	TTL	.80	2.0	0.0	5.0	450m	0	7	74-46N	D16-7n
45	MIC7446N		AB	I	OC	7	20m	.40	30	100n	TTL	.80	2.0	0.0	5.0	450m	0	7	74-46N	DL16dq
46	MIC7447AJ		AB	I	OC	7	40m	.40	15	100n	TTL	.80	2.0	0.0	5.0	515m	0	7	74-46N	D16-7n
47	MIC7447AN		AB	I	OC	7	40m	.40	15	100n	TTL	.80	2.0	0.0	5.0	515m	0	7	74-46N	DL16dq
48	MIC7447J		AB	I	OC	7	20m	.40	15	100n	TTL	.80	2.0	0.0	5.0	450m	0	7	74-46N	D16-7n
49	MIC7447N		AB	I	OC	7	20m	.40	15	100n	TTL	.80	2.0	0.0	5.0	450m	0	7	74-46N	DL16dq
50	MIC7448J		AB	I	OC	7	6.4m	.40	5.5	100n	TTL	.80	2.0	0.0	5.0	450m	0	7	74-48N	D16-7n
51	MIC7448N		AB	I	OC	7	6.4m	.40	5.5	100n	TTL	.80	2.0	0.0	5.0	450m	0	7	74-48N	DL16dq
52	uPB7446C		AB	I	OC	7	8.0m	.40	30	100n	TTL	.80	2.0	0.0	5.0	515m	0	7	74-46N	Δ001AC
53	54LS145DM		AB	I	OC	10	12m	.40	10	50n	TTL	.70	2.0	0.0	5.0	65m	5	C	74-45N	DL16h
54	54LS145FM		AB	I	OC	10	12m	.40	10	50n	TTL	.70	2.0	0.0	5.0	65m	5	C	54-45W	F16-3
55	74LS145DC		AB	I	OC	10	24m	.50	10	50n	TTL	.80	2.0	0.0	5.0	65m	0	7	74-45N	DL16h
56	74LS145FC		AB	I	OC	10	24m	.50	10	50n	TTL	.80	2.0	0.0	5.0	65m	0	7	54-45W	F16-3
57	74LS145PC		AB	I	OC	10	24m	.50	10	50n	TTL	.80	2.0	0.0	5.0	65m	0	7	74-45N	DL16ak
58	7445FC		AB	I	OC	10	80m	.90	30	50n	TTL	.80	2.0	0.0	5.0	350m	0	7	54-45W	F16-3
59	74145FC		AB	I	OC	10	80m	.90	15	50n	TTL	.80	2.0	0.0	5.0	350m	0	7	54-45W	F16-3
60	FLL101-74141		AB	I	OC	10	7.0m	2.5	60		TTL	.80	2.0	0.0	5.0	125m	0	7	74-41N	DL16ds
61	MIC5445J		AB	I	OC	10	80m		30	50n	TTL	.80	2.0	0.0	5.0	310m	5	C	74-45N	D16-7n
62	MIC7445J		AB	I	OC	10	80m		30	50n	TTL	.80	2.0	0.0	5.0	350m	0	7	74-45N	D16-7n
63	MIC7445N		AB	I	OC	10	80m		30	50n	TTL	.80	2.0	0.0	5.0	350m	0	7	74-45N	DL16dq
64	MIC54145J		AB	I	OC	10	80m		15	50n	TTL	.80	2.0	0.0	5.0	310m	5	C	74-45N	D16-7n
65	MIC74145J		AB	I	OC	10	80m		15	50n	TTL	.80	2.0	0.0	5.0	350m	0	7	74-45N	D16-7n
66	MIC74145N		AB	I	OC	10	80m		15	50n	TTL	.80	2.0	0.0	5.0	350m	0	7	74-45N	DL16dq
67	N74LS145B		AB	I	OC	10	12m	.40		50n	TTL	.80	2.0	0.0	5.0	65m	0	7	74-45N	DL16be
68	54LS248DM		AB	L	RP	7	4.0m	.40	10	100n	TTL	.70	2.0	0.0	5.0	75m	5	C	74-248N	DL16h
69	54LS248FM		AB	L	RP	7	4.0m	.40	10	100n	TTL	.70	2.0	0.0	5.0	75m	5	C	54-248W	F16-3
70	54LS249DM		AB	L	OC	7	4.0m	.40	10	100n	TTL	.70	2.0	0.0	5.0	75m	5	C	74-248N	DL16h
71	54LS249FM		AB	L	OC	7	4.0m	.40	10	100n	TTL	.70	2.0	0.0	5.0	75m	5	C	54-248W	F16-3
72	74LS47FC		AB	L	OC	7	24m	.50	5.0	100n	TTL	.80	2.0	0.0	5.0	65m	0	7	54-46W	F16-3
73	74LS48FC		AB	L	RP	7	1.3m	.50	10	100n	TTL	.80	2.0	0.0	5.0	75m	0	7	54-48W	F16-3
74	74LS49FC		AB	L	OC	7	8.0m	.50	10	100n	TTL	.80	2.0	0.0	5.0	75m	0	7	54LS49W	TO86
75	74LS247FC		AB	L	OC	7	24m	.50	5.0	100n	TTL	.80	2.0	0.0	5.0	65m	0	7	54-246W	F16-3
76	74LS248FC		AB	L	RP	7	8.0m	.50	10	100n	TTL	.80	2.0	0.0	5.0	75m	0	7	54-248W	F16-3
77	74LS249FC		AB	L	OC	7	8.0m	.50	10	100n	TTL	.80	2.0	0.0	5.0	75m	0	7	54-248W	F16-3
78	74LS347FC		AB	L	OC	7	24m	.50	7.0	100n	TTL	.80	2.0	0.0	5.0	65m	0	7	54-46W	F16-3
79	74LS447FC		AB	L	OC	7	24m	.50	7.0	100n	TTL	.80	2.0	0.0	5.0	515m	0	7	54-246W	F16-3
80	7446AFC		AB	L	OC	7	40m		30	100n	TTL	.80	2.0	0.0	5.0	515m	0	7	54-46W	F16-3
81	7447AFC		AB	L	OC	7	40m		15	100n	TTL	.80	2.0	0.0	5.0	515m	0	7	54-46W	F16-3
82	7448FC		AB	L	RP	7	1.3m	.85	5.0	100n	TTL	.80	2.0	0.0	5.0	450m	0	7	54-48W	F16-3
83	N8T04B		AB	L	OC	7	40m	.50	6.0		TTL	.80	2.0	0.0	5.0	446m	0	7	AE95	DL16be
84	N8T04W		AB	L	OC	7	40m	.50	6.0		TTL	.80	2.0	0.0	5.0	446m	0	7	AE95	F16-4
85	N8T05B		AB	L	RP	7	4.8m	.40			TTL	.80	2.0	0.0	5.0	110m	0	7	AE95b	DL16be
86	N8T05W		AB	L	RP	7	4.8m	.40			TTL	.80	2.0	0.0	5.0	110m	0	7	AE95b	F16-4
87	N8T06B		AB	L	OC	7	4.8m	.40	6.0		TTL	.80	2.0	0.0	5.0	446m	0	7	AE95a	DL16be
88	N8T06W		AB	L	OC	7	4.8m	.40	6.0		TTL	.80	2.0	0.0	5.0	446m	0	7	AE95a	F16-4
89	SN74LS47W		AB	L	OC	7	24m	.50	15	100n	TTL	.80	2.0	0.0	5.0	65m	0	7	54-46W	F16-14
90	SN74LS48W		AB	L	RP	7	8.0m	.50	5.5	100n	TTL	.80	2.0	0.0	5.0	75m	0	7	54-48W	F16-14
91	SN74LS49W		AB	L	OC	7	8.0m	.50	5.5	100n	TTL	.80	2.0	0.0	5.0	75m	0	7	54LS49W	F14-18
92	SN74LS247W		AB	L	OC	7	24m	.50	15	100n	TTL	.80	2.0	0.0	5.0	65m	0	7	54-246W	F16-14
93	SN74LS248W		AB	L	RP	7	8.0m	.50	5.5	100n	TTL	.80	2.0	0.0	5.0	75m	0	7	54-248W	F16-14
94	SN74LS249W		AB	L	OC	7	8.0m	.50	5.5	100n	TTL	.80	2.0	0.0	5.0	75m	0	7	54-248W	F16-14
95	ZN7441AE		AB	L	TP	10	16m	.40	7.0	29n	TTL	.80	2.0	0.0	5.0		0	7	AE85	DL16af
96	DS8868J		AB	L	OC	12	110m	.50	9.0		TTL	.50		0.0	4.0	44m	0	7	AE54	DL18j
97	DS8868N		AB	L	OC	12	80m	.50	9.0		TTL	.50		0.0	4.0	54m	0	7	AE54	DL18j
98	9317BFC		AB	LI		7	40m	.80	20	500n	TTL	.80	2.0	0.0	5.0		0	7	54-46W	F16-3
99	9317CFC		AB	LI		7	20m	.40	30	500n	TTL	.80	2.0	0.0	5.0		0	7	54-46W	F16-3
100	DS8673J		ABC	L	AL	7	12m	3.0	10	140n	TTL	.80	2.0	0.0	5.0	250m	0	7	AE46	DL16g
101	DS8673N		ABC	L	AL	7	12m	3.0	10	140n	TTL	.80	2.0	0.0	5.0	250m	0	7	AE46	DL16bv
102	DS8674J		ABC	L	AL	7	12m	3.0	10	140n	TTL	.80	2.0	0.0	5.0	250m	0	7	AE46	DL16g
103	DS8674N		ABC	L	AL	7	12m	3.0	10	140n	TTL	.80	2.0	0.0	5.0	250m	0	7	AE46	DL16bv
104	NE586FØ		ABC	L	OC	7			7.0	85n	TTL	.80	2.0	0.0	5.0	1.0	0	7	AE202	DL16bk
105	NE586NØ		ABC	L	OC	7			7.0	85n	TTL	.80	2.0	0.0	5.0	1.0	0	7	AE202	DL16y
106	DS8655N		ABE	T	OC	12	40m	.50	6.0	100n	TTL			0.0	10	560m	0	7	AE45	DL22a
107	NE585-6F		AF	G	AH	6	35m	55	110	5.0u	TTL	1.1	2.6	0.0	100	250m	0	7	AE112a	DL16y
108	NE584-8F		AF	G	AL	8	2.7m	14	110	5.0u	TTL	1.1	2.6	100	0.0	245m	0	7	AE111a	DL22h
109	NE584-9F		AF	G	AL	9	2.7m	14	110	5.0u	TTL	1.1	2.6	100	0.0	245m	0	7	AE111	DL24m
110	NE585-9F		AF	G	AH	9	35m	55	110	5.0u	TTL	1.1	2.6	0.0	100	250m	0	7	AE112	DL22h

SYMBOLS AND CODES EXPLAINED IN INTERPRETER

7. SWITCH DRIVERS

IN ORDER OF: (1)TECHN (2)NO SW CH (3)MIN SINK CURR (4)AB MAX VOLT & (5)TYPE NO

LINE No.	5 TYPE NUMBER	DATA SHT.	2 NO SW CH	3 OUTPUT MIN SINK CURR (A)	OUTPUT ° OUT (V)	4 ABS MAX VOLT (V)	MAX INP DR CURR (A)	MAX tON (S)	MAX tOFF (S)	FEAT-URES	1 TECHN	INPUT LOGIC LEVELS MAX '0' (V)	INPUT LOGIC LEVELS MIN '1' (V)	RATED PWR SUPPLY SPAN NEG (V)	RATED PWR SUPPLY SPAN POS (V)	MAX. OPER. POWER DISS (W)	OPER TEMP RANGE CODE -	OPER TEMP RANGE CODE +	DRAWINGS LOGIC OR BLOCK	DRAWINGS OUTLINE Δ=MO
1	D139BL		2	2.0m	1.5	30	500u	170n	200n			0.0	5.0	20	10	750m	2	8	AF16	F14-4a
2	D130AA		2	30m		30	1.0m	180n	270n			.80	2.0	20	10	450m	5	C	AF14	CN4a
3	D130AL		2	30m		30	1.0m	180n	270n			.80	2.0	20	10	750m	5	C	AF14a	F14-4a
4	D130BA		2	30m		30	1.0m	300n	300n			.80	2.0	20	10	450m	2	8	AF14	CN4a
5	D130BL		2	30m		30	1.0m	300n	300n			.80	2.0	20	10	750m	2	8	AF14a	F14-4a
6	D129BL		4	10m	-19	50	200u	300n	1.5u	Decod		.70	5.0	20	0.0	750m	2	8	AF13	F14-4a
7	D132AL		4	10m	.70	50	200u	250n	1.5u	Decod		.70	2.2	0.0	5.0	750m	5	C	AF15	F14-4a
8	D132AP		4	10m	.70	50	200u	250n	1.5u	Decod		.70	2.2	0.0	5.0	825m	5	C	AF15a	DL14aa
9	D132BL		4	10m	.70	50	200u	250n	1.5u	Decod		.70	2.2	0.0	5.0	750m	2	8	AF15	F14-4a
10	D132BP		4	10m	.70	50	200u	250n	1.5u	Decod		.70	2.2	0.0	5.0	825m	2	8	AF15a	DL14aa
11	MEM4900D		4	12m		15		180n	180n			.30	2.8	5.0	5.0	2.5u	5	C	AF23	DL14h
12	MEM4900F		4	12m		15		180n	180n			.30	2.8	5.0	5.0	2.5u	5	C	AF23	F14-10a
13	MEM4900P		4	12m		15		180n	180n			.30	2.8	5.0	5.0	2.5u			AF23	DL14bb
14	SP751AF		3	10m		7.0		30n	35n		TTL	-.80	-2.7	0.0	30	160m	0	7	AF22	F10-1
15	SP751BF		3	10m		7.0		30n	35n		TTL	-.80	-2.7	0.0	20	80m	0	7	AF22	F10-1
16	SP701BT		3	10m		20		30n	35n		TTL	-.80	-2.7	0.0	20	80m	0	7	AF21	CN8
17	SP701AT		3	10m		30		30n	35n		TTL	-.80	-2.7	0.0	30	160m	0	7	AF21	CN8
18	SP703AE		3	10m		30		30n	35n		TTL	-.80	-2.7	0.0	30	135m	0	7	AF4	DL14bf
19	SP703AF		3	10m		30		30n	35n		TTL	-.80	-2.7	0.0	30	135m	0	7	AF4	F14-6
20	SP703BE		3	10m		30		30n	35n		TTL	-.80	-2.7	0.0	20	55m	0	7	AF4	DL14bf
21	SP703BF		3	10m		30		30n	35n		TTL	-.80	-2.7	0.0	20	55m	0	7	AF4	F14-6
22	SP704AE		3	10m		30	1.0m	30n	35n		TTL	-.80	-2.7	0.0	30	135m	0	7	AF5	DL14bf
23	SP704AF		3	10m		30	1.0m	30n	35n		TTL	-.80	-2.7	0.0	30	135m	0	7	AF5	F14-6
24	SP704BE		3	10m		30	1.0m	30n	35n		TTL	-.80	-2.7	0.0	20	55m	0	7	AF5	DL14bf
25	SP704BF		3	10m		30	1.0m	30n	35n		TTL	-.80	-2.7	0.0	20	55m	0	7	AF5	F14-6
26	D123BL		6	5.0m	-19	30	1.0m	500n	1.5u		TTL	.40	1.0	20	0.0	750m	2	8	AF6	F14-4a
27	D125BL		6	5.0m	-19	30	700u	500n	1.5u		TTL	.50	4.6	20	0.0	750m	2	8	AA50h	F14-4a

SYMBOLS AND CODES EXPLAINED IN INTERPRETER

8. A/D CONVERTERS

IN ORDER OF: (1)BITS RES (2)MAX FSR ERROR (3)MAX CONV TIME & (4)TYPE NUMBER

LINE No.	4 TYPE NUMBER	DATA SHT.	1 BRITS	CONVERTER	OUTPUT ARITH CODE OPTION	2 MAX FSR LINE. ERROR (%)	3 MAX CONV TIME (S)	MAX GAIN TEMP DRIFT ppm/C	INPUT MAX RANGE P-P	INPUT MAX RANGE MODE	MIN OUTP DRIVE CURR (A)	OUTPUT LOGIC LEVELS MAX '0' (V)	OUTPUT LOGIC LEVELS MIN '1' (V)	RATED PWR SUP SPAN NEG (V)	RATED PWR SUP SPAN POS (V)	MAX OPER POWER DISS (W)	OPER TEMP RANGE CODE -	OPER TEMP RANGE CODE +	DRAWINGS LOGIC OR BLOCK	DRAWINGS OUTLINE Δ=MO
1	ICL7116CDL		3*	C	E			5.0	30	V				15	15	1.0	0	7	BA168	DL40u
2	ICL7116CPL		3*	C	E			5.0	30	V				15	15	800m	0	7	BA168	DL40t
3	ICL7117CDL		3*	C	E			5.0	15	V				9.0	6.0	1.0	0	7	BA168a	DL40u
4	ICL7117CPL		3*	C	E			5.0	15	V				9.0	6.0	800m	0	7	BA168a	DL40t
5	8751CJ		3*	D	E	100m			1.9	V		.05	4.95	5.0	5.0	1.2	4	8	BA165	DL28j
6	8751CN		3*	D	E	100m			1.9	V		.05	4.95	5.0	5.0	1.2	4	8	BA165	DL28ab
7	AD2020		3*	D	E	100m	.50	50	1.1	VB	3.2m	.50	4.0	0.0	5.0	85m	0	7	BA123	DL16bs
8	NADC-1		4		A	3.0m	65n	500u	5.0	VU				15	15	7.0	5	8		
9	NADC-3		4		A	3.0m	65n	500u	5.0	VU				15	15	7.0	5	7		
10	ICL7103BCDI		4*	DI	AE	1.0	2.0u	40	65m	VB	10m	.40	2.4	15	15	500m	0	7	BA163	DL28ae
11	ICL7103BCPI		4*	DI	AE	1.0	2.0u	40	65m	VB	10m	.40	2.4	15	15	500m	0	7	BA163	DL28j
12	DF331CJ		8$	N$	T;16$		5.3u		6.0	VB		.30	12	7.5	7.5	450m	0	7	BA128	DL14p
13	NC331		8$	N$	T;16$		5.3u		6.0	VB	33u	.50	7.5	7.5	7.5	450m	0	7	BA128	DL∅
14	MK50816N-1#1		8	S	A	500n	110u		5.0	VU	1T	.40	4.6	0.0	5.0	500m	4	8	BA186a	DL40t
15	4140		8	CI	AG	100m	1.2m	75	14	VBU	5T∅	.40	2.4	5.0	5.0	500m	4	8	BA143a	DL24az
16	4143-01		8	CI	AG	100m	1.2m	75	14	VBU	5T∅	.40	2.4	5.0	5.0	500m	5	C	BA143	DL24az
17	4143-02		8	CI	AG	100m	1.2m	75	14	VBU	5T∅	.40	2.4	5.0	5.0	500m	4	8	BA143	DL24az
18	VADC-A		8		A	200m			5.0	VU				15	15	20	0	5	BA105	PC9
19	VADC-B		8		C	200m			5.0	VB				15	15	20	0	5	BA105	PC9
20	ADC-TV8B		8	T	AC	200m	50n	60	10	VB		-1.5	-.85	15	15		0	7		PC∅
21	ADC-815BGC		8	S	ACG	200m	600n	20	20	VBU	4T	.40	2.4	15	15	1.2	0	7	BA153	
22	ADC-815BMC		8	S	ACG	200m	600n	20	20	VBU	4T	.40	2.4	15	15	1.2	0	7	BA153	
23	ADC-815BMM		8	S	ACG	200m	600n	20	20	VBU	4T	.40	2.4	15	15	1.2	5	C	BA153	
24	ADC-815BMR		8	S	ACG	200m	600n	20	20	VBU	4T	.40	2.4	15	15	1.2	2	8	BA153	
25	ADC-825BGC		8	S	ACG	200m	1.0u	20	20	VBU	4T	.40	2.4	15	15	1.2	0	7	BA153	
26	ADC-825BMC		8	S	ACG	200m	1.0u	20	20	VBU	4T	.40	2.4	15	15	1.2	0	7	BA153	
27	ADC-825BMM		8	S	ACG	200m	1.0u	20	20	VBU	4T	.40	2.4	15	15	1.2	5	C	BA153	
28	ADC-825BMR		8	S	ACG	200m	1.0u	20	20	VBU	4T	.40	2.4	15	15	1.2	2	8	BA153	
29	MK5160N		8	S	A	.20	110u		2.0u	AB	3u	.40	4.8	0.0	5.0	500m	0	7	CB72	DL40t
30	MK5160P		8	S	A	.20	110u		2.0u	AB	3u	.40	4.8	0.0	5.0	500m	0	7	CB72	DL40h
31	MK5161N		8	S	A	.20	110u		2.0u	AB	3u	.40	4.8	0.0	5.0	500m	4	8	CB72	DL40t
32	MK5161P		8	S	A	.20	110u		2.0u	AB	3u	.40	4.8	0.0	5.0	500m	4	8	CB72	DL40h
33	ADC586-8		8	I	A	200m	1.8m	40	10	VU		.40	2.4	5.0	5.0	30m	4	8	BA78	DL24a
34	TC5090P		8	I	A	200m	2.0m		5.0	VU	1T	.05	4.95		5.0	5.0m	4	8	BA149	
35	TC5091P		8	I	A	200m	2.0m		5.0	VU	1T	.05	4.95		5.0	5.0m	4	8	BA148	
36	HA16613P		8	D	A	.39		400		AU	-5u	0.4	1.0	0.0	6.0	60m	2	7		DL28ao
37	uPD7001		8	S	A	0.4	112u	30	5.6	V		0.4	5.0	0.0	5.0	15m	0	7		
38	MK5168N-1		8	S		500m	110u		5.0	VU		.50	4.5	0.0	5.0	1.5m	4	8	BA201	DL16ax
39	MK50816P-1#1		8	S	A	500m	110u		5.0	VU	1T	.40	4.6	0.0	5.0	500m	4	8	BA186a	DL40t
40	4143-83		8	C	AC	500m	1.2m	5.0			5T	.4	2.4	5.0	5.0	500m	5	C	BA143	DL24av
41	MK5016N-1		8	S	A	1.0	100u		5.0	VU	1.6m	.40	4.35	0.0	5.0	500m	4	8		DL28r
42	MK50808N		8	S	A	1.0	110u		5	VU	1.6m	0.4	4.35	0.0	5.0	500m	0	7		DL28r
43	MK50808N-1		8	S	A	1.0	110u		5	VU	1.6m	0.4	4.35	0.0	5.0	500m	4	8		DL28r
44	MK50816N#1		8	S	A	1.0	110u		5.0	VU	1T	.40	4.6	0.0	5.0	500m	0	7	BA186a	DL40i
45	MK50816P#1		8	S	A	1.0	110u		5.0	VU	1T	.40	4.6	0.0	5.0	500m	0	7	BA186a	DL40i
46	ZN432CE		10	S	C	50m	20u	10	5.0	VB	1.6m	.40	2.4	5.0	5.0	400m	0	7	BA75	DL∅
47	ADC586-10		10	I	A	50m	6.0m	40	10	VU		.40	2.4	5.0	5.0	30m	4	8	BA78a	DL24a
48	4141		10	CI	AG	100m	5.0m	75	14	VBU	5T∅	.40	2.4	5.0	5.0	500m	4	8	BA143a	DL24az
49	4144-01		10	CI	AG	100m	5.0m	75	14	VBU	5T∅	.40	2.4	5.0	5.0	500m	5	C	BA143	DL24az
50	4144-02		10	CI	AG	100m	5.0m	75	14	VBU	5T∅	.40	2.4	5.0	5.0	500m	4	8	BA143	DL24az
51	ADDAC80Z10		10	S	BDM	.50	21u	30	20	VB				12	12	800m	2	8	BA5	DL∅
52	4144-83		10	C	AC	500m	5.0m	5.0			5T	.4	2.4	5.0	5.0	500m	5	C	BA143	DL24av
53	AD573JP		10	S	AC	1.0 Ø	20u		10	U	3.2m	0.80	2.0	15	5.0	800m	0	7	BA268	DL20m
54	ADC12DM		12	C	AC	12m	12m	40	10u	AU	360u	.40	2.4	5.0	5.0	10m	5	C	BA72	DL24a
55	ADC586-12		12	I	A	12m	24m	40	10	VU		.40	2.4	5.0	5.0	30m	4	8	BA78b	DL24a
56	ADH-11/.5		12	S	G	25m	2.0u		10	VU				5.2	0.0	9.0	5	8	BA98	PC6a
57	ADH-10/1		12	S	G	50m	1.0u		10	VB				0.0	5.0	9.0	5	8	BA98	PC6a
58	ADH-9/1		12	S	G	100m	900n		10	VB				15	0.0	9.0	5	8	BA98	PC6a
59	4142		12	CI	AG	100m	20m	75	14	VBU	5T∅	.40	2.4	5.0	5.0	500m	4	8	BA143a	DL24az
60	4145-01		12	CI	AG	100m	20m	75	14	VBU	5T∅	.40	2.4	5.0	5.0	500m	5	C	BA143	DL24az
61	4145-02		12	CI	AG	100m	20m	75	14	VBU	5T∅	.40	2.4	5.0	5.0	500m	4	8	BA143	DL24az
62	ADC7109C		12	I	A	.20		80				.40	3.5	5.0	5.0	500m	0	7		
63	ADC7109M		12	I	A	.20		80				.40	3.5	5.0	5.0	1.0	5	C		DL40i
64	ADC7109R		12	I	A	.20		80				.40	3.5	5.0	5.0	1.0	2	8		DL40i
65	ADH-8/1		12	S	G	200m	800n		10	VB				0.0	5.0	9.0	5	8	BA98	PC6a
66	AD02-883AW		12Δ	S	ACG	200m	8.0u	60	20	VBU	3.2m	.40	2.4	15	15	572m	5	C	BA29	DL48
67	AD02-883W		12Δ	S	ACG	200m	8.0u	120	20	VBU	3.2m	.40	2.4	15	15	572m	5	C	BA29	DL48
68	AD02AW		12Δ	S	ACG	200m	8.0u	60	20	VBU	3.2m	.40	2.4	15	15	572m	5	C	BA29	DL48
69	AD02CW		12Δ	S	ACG	200m	8.0u	120	20	VBU	3.2m	.40	2.4	15	15	572m	0	7	BA29	DL48
70	AD02EW		12Δ	S	ACG	200m	8.0u	60	20	VBU	3.2m	.40	2.4	15	15	572m	0	7	BA29	DL48
71	AD02W		12Δ	S	ACG	200m	8.0u	120	20	VBU	3.2m	.40	2.4	15	15	572m	5	C	BA29	DL48
72	7556CB		12	S	A	200m	50u	30	20	VBU	5.0n	.80	3.0	0.0	15	300m	0	7	BA147	D36-1
73	7556CU		12	S	A	200m	50u	30	20	VBU	5.0n	.80	3.0	0.0	15	300m	0	7	BA147	D36-1
74	7556MB		12	S	A	200m	50u	25	20	VBU	5.0n	.80	3.0	0.0	15	300m	5	C	BA147	D36-1
75	7556MU		12	S	A	200m	50u	25	20	VBU	5.0n	.80	3.0	0.0	15	300m	5	C	BA147	D36-1
76	7555C		12	S	A	200m	200u	5.0	20	VU	5.0n	.80	3.0	0.0	15	40m	0	7	BA146	DL32i
77	7555M		12	S	A	200m	200u	2.0	20	VU	5.0n	.80	3.0	0.0	15	40m	5	C	BA146	DL32i
78	AD5201A		12	S	A	400m	50u		10	VU	8T	.40	2.4	15	15	725m	2	8	BA179	DL24bp
79	AD5201S		12	S	A	400m	50u		10	VU	8T	.40	2.4	15	15	725m	5	C	BA179	DL24bp
80	AD5202A		12	S	A	400m	50u		10	VU	8T	.40	2.4	15	15	725m	2	8	BA179	DL24bp
81	4189		12	S	BDM	500m	5.0u	25	20	VB	5T	0.4	2.4	15	15		0	7	BA220	DL32∅
82	4189-83		12	S	BDM	500m	5.0u	25	20	VB	5T	0.4	2.4	15	15		5	C	BA220	DL32∅
83	TPADC85		12	S	BDM	500m	7.0u	15	20	VB	5T	0.4	2.4	15	15		2	8	BA220	DL32∅
84	TPADC85-83		12	S	BDM	500m	7.0u	15	20	VB	5T	0.4	2.4	15	15		2	8	BA220	DL32∅
85	TPADC87		12	S	BDM	500m	7.0u	15	20	VB	5T	0.4	2.4	15	15		5	C	BA220	DL32∅
86	TPADC87-83		12	S	BDM	500m	7.0u	15	20	VB	5T	0.4	2.4	15	15		5	C	BA220	DL32∅
87	TPADC87#mil		12	C	BDM	0.5	7.0u	5.0	20	VBu	5T	0.4	2.4	15	15	1.2	0	7	BA215	DL32a
88	ADDAC80Z12		12	S	BDM	.50	25u	30	20	VB				12	12	800m	2	8	BA5	DL∅
89	MN5500		12	C	A	500m	25u		20	VU		.40	2.4	15	15	2.2	0	7		DL40m
90	AD5202S		12	S	A	1.0	50u		20	VB	8T	.40	2.4	15	15	725m	5	C	BA179	DL24bp
91	AD5204A		12	S	A	1.0	50u		20	VB	8T	.40	2.4	15	15	725m	2	8	BA179	DL24bp
92	AD5204S		12	S	A	1.0	50u		20	VB	8T	.40	2.4	15	15	725m	5	C	BA179	DL24bp
93	AD5205A		12	S	A	1.0	50u		20	VB	8T	.40	2.4	15	15	725m	2	8	BA179	DL24bp
94	AD5205S		12	S	A	1.0	50u		20	VB	8T	.40	2.4	15	15	725m	5	C	BA179	DL24bp
95	AD7550		13	Q	G	6.0m	40m	10	20	VBU	1.6m	.80	2.4	12	5.0	58m	2	8	BA37	DL40b
96	4146-01		13	C	E	100m	10m	75	14		5T∅	.40	2.4	5.0	5.0	500m	5	C	BA143a	DL24az
97	4146-02		13	C	E	100m	10m	75	14		5T∅	.40	2.4	5.0	5.0	500m	4	8	BA143a	DL24az
98	MN7200		14	R	A	9.0m	2.0m	18m	11	VØ§	2.0m	.80	2.9	12	12	4.6	0	7	BA91	PC13
99	ADC-M15		15	S	CG	3.0m	25u	3.0	20	VB	5T∅			15	15	6.7	0	7	BA106	PC15
100	ADC8068AC/ADC7104-14C		15	I	H	1.0	81m	5.0	20	VB	320u	.40	2.4	15	15	500m	0	7	BA194	DL14z
101	DDC5497-1		16	T	CG	1.5m	4.0u	2.0	30	V	8.0m			15	15	14	5	8		
102	DDC5497-3		16	T	CG	1.5m	4.0u	2.0	30	V	8.0m			15	15	14	0	7		
103	ADC8068AC/ADC7104-16C		17	I	H	1.0	328m	5.0	20	VB	320u	.40	2.4	15	15	500m	0	7	BA194	DL14z

SYMBOLS AND CODES EXPLAINED IN INTERPRETER

9. D/A CONVERTERS

IN ORDER OF: (1)BITS RES (2)MAX FSR ERROR (3)MAX SETTLING TIME & (4)TYPE NUMBER

LINE No.	4 TYPE NUMBER	DATA SHT.	1 BRITS	CTONPVE	INPUT ARITH CODE OPTION	2 MAX FSR LINE. ERROR (%)	3 MAX SETTLING TIME (S)	MAX GAIN TEMP ° ACCUR (%)	DRIFT ppm/C	OUTPUT MAX RANGE P-P	MODE	INPUT LOGIC LEVELS MAX '0' (V)	MIN '1' (V)	RATED PWR SUP SPAN NEG (V)	POS (V)	MAX OPER POWER DISS (W)	OPER TEMP RANGE CODE -	+	DRAWINGS LOGIC OR BLOCK	OUTLINE ° Δ=MO
1	MEM4956			L	A						VB	0.3	10	.25	30		0	7	BB252	DL14bb
2	AD7520JDØ		1	M	AC	200m	500n	50m	2.0	100m	VB	.80	2.4	0.0	15	450m	2	8	BB159	DL16bi
3	AD7520KDØ		1	M	AC	200m	500n	50m	2.0	100m	VB	.80	2.4	0.0	15	450m	2	8	BB159	DL16bi
4	AD7520LDØ		1	M	AC	200m	500n	50m	2.0	100m	VB	.80	2.4	0.0	15	450m	2	8	BB159	DL16bi
5	AD7520LNØ		1	M	AC	200m	500n	50m	2.0	100m	VB	.80	2.4	0.0	15	450m	0	7	BB159	DL16x
6	AD7520SDØ		1	M	AC	200m	500n	50m	2.0	100m	VB	.80	2.4	0.0	15	450m	5	C	BB159	DL16bi
7	AD7520TDØ		1	M	AC	200m	500n	50m	2.0	100m	VB	.80	2.4	0.0	15	450m	5	C	BB159	DL16bi
8	AD7520UDØ		1	M	AC	200m	500n	50m	2.0	100m	VB	.80	2.4	0.0	15	450m	5	C	BB159	DL16bi
9	AD7521JDØ		1	M	AC	200m	500n	50m	2.0	100m	VB	.80	2.4	0.0	15	450m	2	8	BB159	DL16bi
10	AD7521JNØ		1	M	AC	200m	500n	50m	2.0	100m	VB	.80	2.4	0.0	15	450m	0	7	BB159	DL16x
11	AD7521KDØ		1	M	AC	200m	500n	50m	2.0	100m	VB	.80	2.4	0.0	15	450m	2	8	BB159	DL16bi
12	AD7521LDØ		1	M	AC	200m	500n	50m	2.0	100m	VB	.80	2.4	0.0	15	450m	2	8	BB159	DL16bi
13	AD7521LNØ		1	M	AC	200m	500n	50m	2.0	100m	VB	.80	2.4	0.0	15	450m	0	7	BB159	DL16x
14	AD7521SDØ		1	M	AC	200m	500n	50m	2.0	100m	VB	.80	2.4	0.0	15	450m	5	C	BB159	DL16bi
15	AD7521TDØ		1	M	AC	200m	500n	50m	2.0	100m	VB	.80	2.4	0.0	15	450m	5	C	BB159	DL16bi
16	AD7521UDØ		1	M	AC	200m	500n	50m	2.0	100m	VB	.80	2.4	0.0	15	450m	5	C	BB159	DL16bi
17	AD7530JDØ		1	M	AC	200m	500n	50m	2.0	100m	VB	.80	2.4	0.0	15	450m	2	8	BB159	DL16bi
18	AD7530JNØ		1	M	AC	200m	500n	50m	2.0	100m	VB	.80	2.4	0.0	15	450m	0	7	BB159	DL16x
19	AD7530KDØ		1	M	AC	200m	500n	50m	2.0	100m	VB	.80	2.4	0.0	15	450m	2	8	BB159	DL16bi
20	AD7530KNØ		1	M	AC	200m	500n	50m	2.0	100m	VB	.80	2.4	0.0	15	450m	0	7	BB159	DL16x
21	AD7530LDØ		1	M	AC	200m	500n	50m	2.0	100m	VB	.80	2.4	0.0	15	450m	2	8	BB159	DL16bi
22	AD7530LNØ		1	M	AC	200m	500n	50m	2.0	100m	VB	.80	2.4	0.0	15	450m	0	7	BB159	DL16x
23	AD7530SDØ		1	M	AC	200m	500n	50m	2.0	100m	VB	.80	2.4	0.0	15	450m	5	C	BB159	DL16bi
24	AD7530TDØ		1	M	AC	200m	500n	50m	2.0	100m	VB	.80	2.4	0.0	15	450m	5	C	BB159	DL16bi
25	AD7530UDØ		1	M	AC	200m	500n	50m	2.0	100m	VB	.80	2.4	0.0	15	450m	5	C	BB159	DL16bi
26	AD7531JDØ		1	M	AC	200m	500n	50m	2.0	100m	VB	.80	2.4	0.0	15	450m	2	8	BB159	DL16bi
27	AD7531JNØ		1	M	AC	200m	500n	50m	2.0	100m	VB	.80	2.4	0.0	15	450m	0	7	BB159	D16-17x
28	AD7531KDØ		1	M	AC	200m	500n	50m	2.0	100m	VB	.80	2.4	0.0	15	450m	2	8	BB159	DL16bi
29	AD7531KNØ		1	M	AC	200m	500n	50m	2.0	100m	VB	.80	2.4	0.0	15	450m	0	7	BB159	D16-17x
30	AD7531LDØ		1	M	AC	200m	500n	50m	2.0	100m	VB	.80	2.4	0.0	15	450m	2	8	BB159	DL16bi
31	AD7531SDØ		1	M	AC	200m	500n	50m	2.0	100m	VB	.80	2.4	0.0	15	450m	5	C	BB159	DL16bi
32	AD7531TDØ		1	M	AC	200m	500n	50m	2.0	100m	VB	.80	2.4	0.0	15	450m	5	C	BB159	DL16bi
33	AD7531UDØ		1	M	AC	200m	500n	50m	2.0	100m	VB	.80	2.4	0.0	15	450m	5	C	BB159	DL16bi
34	AD7541LNØ		1	M	AC	200m	1.0u	10m	2.0	100m	VB	.80	2.4	0.0	15	450m	0	7	BB159	DL16x
35	DAC808CQ		2	M	EF	200m	150n	200m	80	2.0	AB	.80	2.0	15	15	194m	0	7		
36	ICL7113LJN		3	M	E	50m	1.0u	50m	10	20	VB	.80	3.0	0.0	15	30m	2	8	BB206	DL18n
37	ICL7113LPN		3	M	E	50m	1.0u	50m	10	20	VB	.80	3.0	0.0	15	30m	0	7	BB206	DL18o
38	ICL7113UJN		3	M	E	50m	1.0u	50m	10	20	VB	.80	3.0	0.0	15	30m	5	C	BB206	DL18n
39	ICL7113KJN		3	M	E	100m	1.0u	50m	10	20	VB	.80	3.0	0.0	15	30m	2	8	BB206	DL18n
40	ICL7113KPN		3	M	E	100m	1.0u	50m	10	20	VB	.80	3.0	0.0	15	30m	0	7	BB206	DL18o
41	ICL7113TJN		3	M	E	100m	1.0u	50m	10	20	VB	.80	3.0	0.0	15	30m	5	C	BB206	DL18n
42	ICL7113JJN		3	M	E	200m	1.0u	50m	10	20	VB	.80	3.0	0.0	15	30m	2	8	BB206	DL18n
43	ICL7113JPN		3	M	E	200m	1.0u	50m	10	20	VB	.80	3.0	0.0	15	30m	0	7	BB206	DL18o
44	ICL7113SJN		3	M	E	200m	1.0u	50m	10	20	VB	.80	3.0	0.0	15	30m	5	C	BB206	DL18n
45	DAC206AY		6	L	BD	250mØ	1.5u	500mØ	80	20	VB	0.8	2.0	15	15	270m	5	C	BB93	DL14cg
46	DAC206N		6			.25 Ø	1.5u	.50 Ø	60	24	VB	.80	2.0	15	15	250m	6	F	BB93	CH75
47	DAC206EY		6		A	390m	3.0u	780m	80	20	VBU	.80	2.0	18	18	500m	5	C	BB93	DL18i
48	DAC206G		6			.50 Ø	1.5u	.50 Ø	90	24	VB	.80	2.0	15	15	250m	6	F	BB93	CH75
49	DAC206BY		6	L	BD	500mØ	3.0u	500mØ	160	20	VB	0.8	2.0	15	15	270m	5	C	BB93	DL18i
50	DAC206FY		6		A	780m	3.0u	780m	160	20	VBU	.80	2.0	18	18	500m	5	C	BB93	DL18i
51	DAC02DDX2		7	L	H	400m	1.5u	400m	150	10	VB	.80	2.0	15	15	350m	0	7	BB34	DL18i
52	DAC98CX		8	N					100		A			15	15		2	8	BB40a	DL18Ø
53	DF332CJ		8	N$	T;16$		15u	10		6.0	VB	.80	6.5	7.5	7.5	450m	0	7	BB180	DL14p
54	NC332		8	N$	T;16$		15u	10		6.0	VB	0.0	7.5	7.5	7.5	450m	0	7	BB180	DLØ
55	DAC-08HDM		8	M		100m	135n		50	2.1	V	.80	2.8	15	15	500m	5	C	BB37	DL16ad
56	uA0801ADM		8	M	A	100m	135n		50	4.2m	AB	.80	2.0	15	15	174m	5	C	BB37	DL16h
57	uA0801AFM		8	M	A	100m	135n		50	4.2m	AB	.80	2.0	15	15	174m	5	C	BB37	F16-3
58	uA0801HDC		8	M	A	100m	135n		50	4.2m	AB	.80	2.0	15	15	174m	0	7	BB37	DL16h
59	uA0801HPC		8	M	A	100m	135n		50	4.2m	AB	.80	2.0	15	15	174m	0	7	BB37	DL16ak
60	uA0802HDC		8	M	A	100m	135n		20	4.2m	AU	.80	2.0	15	5.0	305m	0	7	BB24	DL16h
61	uA0802HPC		8	M	A	100m	135n		20	4.2m	AU	.80	2.0	15	5.0	305m	0	7	BB24	DL16ak
62	DAC-08ADM		8	M		190m	135n		50	2.1	V	.80	2.8	15	15	500m	5	C	BB37	DL16ad
63	DAC-08DM		8	M		190m	135n		50	2.1	V	.80	2.8	15	15	500m	5	C	BB37	DL16ad
64	uA0801DM		8	M	A	190m	135n		50	4.2m	AB	.80	2.0	15	15	174m	5	C	BB37	DL16h
65	uA0801FM		8	M	A	190m	135n		50	4.2m	AB	.80	2.0	15	15	174m	5	C	BB37	F16-3
66	uA0802ADC		8	M	A	190m	135n		20	4.2m	AU	.80	2.0	15	5.0	305m	0	7	BB24	DL16h
67	uA0802APC		8	M	A	190m	135n		20	4.2m	AU	.80	2.0	15	5.0	305m	0	7	BB24	DL16ak
68	uA0802DM		8	M	A	190m	135n		20	4.2m	AU	.80	2.0	15	5.0	305m	5	C	BB24	DL16h
69	uA0802FM		8	M	A	190m	135n		20	4.2m	AU	.80	2.0	15	5.0	305m	5	C	BB24	F16-3
70	MC6890		8	L	A	190m	140n	200m	35	20	VB	0.8	2.0	18	7	130m	0	7	BB231	DL20h
71	DAC-08EDM		8	M		190m	150n		50	2.1	V	.80	2.8	15	15	500m	0	7	BB37	DL16ad
72	LM1408J-8		8	M	A	190m	150n	200m	20	4.2m	AU	.80	2.0	15	5.0	305m	0	7	BB32	DL16g
73	LM1408N-8		8	M	A	190m	150n	200m	20	4.2m	AU	.80	2.0	15	5.0	305m	0	7	BB32	DL16bv
74	LM1508D-8		8	M	A	190m	150n	200m	20	4.2m	AU	.80	2.0	15	5.0	305m	5	C	BB32	DL16dk
75	LM1508J-8		8	M	A	190m	150n	200m	20	4.2m	AU	.80	2.0	15	5.0	305m	5	C	BB32	DL16g
76	uA0801EDC		8	M	A	190m	150n		50	4.2m	AB	.80	2.0	15	15	174m	0	7	BB37	DL16h
77	uA0801EPC		8	M	A	190m	150n		50	4.2m	AB	.80	2.0	15	15	174m	0	7	BB37	DL16ak
78	1408AG		8	M	A	190m	250n	200m		4.2m	AU	.80	2.0	15	5.0	265m	6	F	♦	CH21
79	MC6890P		8	L	A	190m	200m	.5 Ø	35	20	VB	0.8	2.0	12	5.0	90m	0	7	BB231	DL20o
80	AD7523ADØ		8	M	AC	200m	200n	200m	500	15	VU	.80	2.4	0.3	15	450m	2	8	BB159	DL16bi
81	AD7523JNØ		8	M	AC	200m	200n	200m	500	15	VU	.80	2.4	0.3	15	670m	0	7	BB159	DL16x
82	AD7523SDØ		8	M	AC	200m	200n	200m	500	15	VU	.80	2.4	0.3	15	450m	5	C	BB159	DL16bi
83	DAC7523C		8	M	AC	.20	200n	.20	-50u	400	AB	.80	2.4	0.0	15	670m	0	7	BB39c	DL16bi
84	DAC7523M		8	M	AC	.20	200n	.20	-50u	400	AB	.80	2.4	0.0	15	450m	5	C	BB39c	DL16x
85	DAC7523R		8	M	AC	.20	200n	.20	-50u	400	AB	.80	2.4	0.0	15	450m	2	8	BB39c	DL16x
86	DAC334		8	M	AC	200m	300n	190m	400m	2.0m	AU	.80	2.0	15	5.0	305m	0	7	BB32	DL16cv
87	AD7520JNØ		8	M	AC	200m	500n	50m	2.0	100m	VB	.80	2.4	0.0	15	450m	0	7	BB159	DL16x
88	DAC-2531		8	L	A	200m	600n			3.5	VU			15	15	800m	5	C	BB83	
89	AD7533ADØ		8	M	AC	200m	800n	50m	300	15	VU	.80	2.4	0.3	15	450m	2	8	BB159	DL16bi
90	AD7533JNØ		8	M	AC	200m	800n	50m	300	15	VU	.80	2.4	0.3	15	670m	0	7	BB159	DL16x
91	AD7533SDØ		8	M	AC	200m	800n	50m	300	15	VU	.80	2.4	0.3	15	450m	5	C	BB159	DL16bi
92	DAC334-8-M/B		8	M	AC	200m	1.0u	190m	500m	2.0m	AU	.80	2.0	15	5.0	305m	5	C	BB32	DL16cv
93	DAC334-8-M/C		8	M	AC	200m	1.0u	190m	500m	2.0m	AU	.80	2.0	15	5.0	305m	5	C	BB32	DL16cv
94	DAC02CCX2		8	L	H	200m	1.5u	200m	60	10	VB	.80	2.0	15	15	300m	0	7	BB34	DL18i
95	ZN425E		8	L	A	200m	2.0u	200m	7.5	2.5	VU	.70	2.0	0.0	5.0	200m	0	7	BB71	DL16p
96	HI1-1080		8	L	A	200m	3.0u	200m		10	VBU	.80	2.0	15	5.0	200m	5	C	BB44	DL24ae
97	HI9-1080		8	L	A	200m	3.0u	200m		10	VBU	.80	2.0	15	5.0	200m	5	C	BB44	F24-3
98	DAC336-8		8	L	ABC	200m	4.0u	200m	50	20	VB						0	7	BB160	
99	DAC20-883AQ		8	M	E	250m	135n	500m	50	4.2m	AU	.80	2.0	15	15	194m	5	C	BB37	DL16bt
100	DAC20AQ		8	M	E	250m	135n	500m	50	4.2m	AU	.80	2.0	15	15	194m	5	C	BB37	DL16bt
101	uA0802BDC		8	M	A	390m	135n		20	4.2m	AU	.80	2.0	15	5.0	305m	0	7	BB24	DL16h
102	uA0802BPC		8	M	A	390m	135n		20	4.2m	AU	.80	2.0	15	5.0	305m	0	7	BB24	DL16ak
103	DAC-08CDM		8	M		390m	150n		80	2.1	V	.80	2.8	15	15	500m	0	7	BB37	DL16ad
104	LM1408J-7		8	M	A	390m	150n	200m	20	4.2m	AU	.80	2.0	15	5.0	305m	0	7	BB32	DL16g
105	LM1408N-7		8	M	A	390m	150n	200m	20	4.2m	AU	.80	2.0	15	5.0	305m	0	7	BB32	DL16bv
106	uA0801CDC		8	M	A	390m	150n		50	4.2m	AB	.80	2.0	15	15	174m	0	7	BB37	DL16h
107	uA0801CPC		8	M	A	390m	150n		50	4.2m	AB	.80	2.0	15	15	174m	0	7	BB37	DL16ak
108	HI1-1085		8	L	A	400m	1.5u	200m		10	VBU	.80	2.0	15	5.0	200m	0	7	BB44	DL24ae
109	HI9-1085		8	L	A	400m	1.5u	200m		10	VBU	.80	2.0	15	5.0	200m	0	7	BB44	F24-3
110	DAC20-883Q		8	M	E	500m	150n	500m	80	4.2m	AU	.80	2.0	15	15	194m	5	C	BB37	DL16bt

SYMBOLS AND CODES EXPLAINED IN INTERPRETER

9. D/A CONVERTERS

IN ORDER OF: (1)BITS RES (2)MAX FSR ERROR (3)MAX SETTLING TIME & (4)TYPE NUMBER

LINE No.	4 TYPE NUMBER	DATA SHT.	1 BRITS	COYNTPVE	INPUT ARITH CODE OPTION	2 MAX FSR LINE. ERROR (%)	3 MAX SETTLING TIME (S)	MAX GAIN TEMP ° ACCUR (%)	MAX GAIN TEMP DRIFT ppm/C	OUTPUT MAX RANGE P-P	OUTPUT MAX RANGE MODE	INPUT LOGIC LEVELS MAX '0' (V)	INPUT LOGIC LEVELS MIN '1' (V)	RATED PWR SUP SPAN NEG (V)	RATED PWR SUP SPAN POS (V)	MAX OPER POWER DISS (W)	OPER TEMP RANGE CODE -	OPER TEMP RANGE CODE +	DRAWINGS LOGIC OR BLOCK	DRAWINGS OUTLINE Δ=MO
1	DAC20Q		8	M	E	500m	150n	500m	80	4.2m	AU	.80	2.0	15	15	194m	5	C	BB37	DL16bt
2	uA0802CDC		8	M	A	780m	135n		20	4.2m	AU	.80	2.0	15	5.0	305m	0	7	BB24	DL16h
3	uA0802CPC		8	M	A	780m	135n		20	4.2m	AU	.80	2.0	15	5.0	305m	0	7	BB24	DL16ak
4	LM1408J-6		8	M	A	780m	150n	200m	20	4.2m	AU	.80	2.0	15	5.0	305m	0	7	BB32	DL16g
5	LM1408N-6		8	M	A	780m	150n	200m	20	4.2m	AU	.80	2.0	15	5.0	305m	0	7	BB32	DL16bv
6	DAC76N		8	N$	H;16$	1.6				4.2m	AB	.80	2.0	15	15	192m	6	F	BB40	CH27
7	DAC76DX		8	N$	H;16$	1.6	500n	1.6	1.6	4.2m	AB	.80	2.0	15	15	207m	0	7	BB40	DL18i
8	DAC76EX		8	N$	H;16$	1.6	500n	1.6	800m	4.2m	AB	.80	2.0	15	15	192m	0	7	BB40	DL18i
9	DAC76G		8	N$	H;16$	3.2				4.2m	AB	.80	2.0	15	15	192m	6	F	BB40	CH27
10	DAC76BX		8	N	H;16$	3.2	500n			4.2m	AU	0.8	2.0	15	15	192m	5	C	BB40	DL18i
11	DAC76CX		8	N$	H;16$	3.2	500n	1.6	1.6	4.2m	AB	.80	2.0	15	15	192m	0	7	BB40	DL18i
12	DAC76X		8	N	H;16$	3.2	500n			4.2m	AU	0.8	2.0	15	15	192m	5	C	BB40	DL18i
13	DAC78EX		8	N	H;16$	3.2	500n			4.2m	AU	0.8	2.0	15	15	262m	5	8	BB40	DL18i
14	DAC78FX		8	N	H;16$	3.2	500n			4.2m	AU	0.8	2.0	15	15	262m	5	8	BB40	DL18i
15	DAC78G		8	N	H;16$	3.2	500n			4.2m	AU	0.8	2.0	15	15	141m	5	8	BB40	
16	DAC78GX		8	N	H;16$	3.2	500n			4.2m	AU	0.8	2.0	15	15	262m	5	8	BB40	DL18i
17	DAC78N		8	N	H;16$	3.2	500n			4.2m	AU	0.8	2.0	15	15	141m	5	8	BB40	CH88
18	DAC02BCX2		9	L	H	100m	1.5u	100m	60	10	VB	.80	2.0	15	15	300m	0	7	BB34	DL18i
19	AD7523BDØ		9	M	AC	200m	200n	200m	500	15	VU	.80	2.4	0.3	15	450m	2	8	BB159	DL16bi
20	AD7523KNØ		9	M	AC	200m	200n	200m	500	15	VU	.80	2.4	0.3	15	670m	0	7	BB159	DL16x
21	AD7523TDØ		9	M	AC	200m	200n	200m	500	15	VU	.80	2.4	0.3	15	450m	5	C	BB159	DL16bi
22	AD7520KNØ		9	M	AC	200m	500n	50m	2.0	100m	VB	.80	2.4	0.0	15	450m	0	7	BB159	DL16x
23	AD7533BDØ		9	M	AC	200m	800n	50m	300	15	VU	.80	2.4	0.3	15	450m	2	8	BB159	DL16bi
24	AD7533KNØ		9	M	AC	200m	800n	50m	300	15	VU	.80	2.4	0.3	15	670m	0	7	BB159	DL16x
25	AD7533TDØ		9	M	AC	200m	800n	50m	300	15	VU	.80	2.4	0.3	15	450m	5	C	BB159	DL16bi
26	DAC10AX		10	M	BDGN	25m	250n	50m		20	VBU	.80	2.0	15	15	75m	5	C	BB209	DL18i
27	DAC10EX		10	M	BDGN	50m	250n	50m		20	VBU	.80	2.0	15	15	75m	0	7	BB209	DL18i
28	DAC100AAN9		10	L	BD	50m	375n	50m	15	10	VBU	.70	2.1	15	15	250m	2	8	BB38	F24-3b
29	DAC100AAQ1		10	L	BD	50m	375n	50m	15	10	VBU	.70	2.1	15	15	250m	2	8	BB38	DL16bt
30	DAC100AAQ2		10	L	BD	50m	375n	50m	15	5.0	VBU	.70	2.1	15	15	250m	2	8	BB38	DL16bt
31	DAC100ABN9		10	L	BD	50m	375n	50m	30	10	VBU	.70	2.1	15	15	250m	2	8	BB38	F24-3b
32	DAC100ABQ1		10	L	BD	50m	375n	50m	30	10	VBU	.70	2.1	15	15	250m	2	8	BB38	DL16bt
33	DAC100ABQ2		10	L	BD	50m	375n	50m	30	5.0	VBU	.70	2.1	15	15	250m	2	8	BB38	DL16bt
34	DAC100ACN9		10	L	BD	50m	375n	50m	60	10	VBU	.70	2.1	15	15	250m	2	8	BB38	F24-3b
35	DAC100ACQ1		10	L	BD	50m	375n	50m	60	10	VBU	.70	2.1	15	15	250m	2	8	BB38	DL16bt
36	DAC100ACQ2		10	L	BD	50m	375n	50m	60	5.0	VBU	.70	2.1	15	15	250m	2	8	BB38	DL16bt
37	DAC7520C		10	M	AC	.05	500n	.05	10			.80	2.4	0.0	15	450m	0	7	BB159	DL16bi
38	DAC7520M		10	M	AC	.05	500n	.05	10			.80	2.4	0.0	15	450m	5	C	BB159	DL16x
39	DAC7520R		10	M	AC	.05	500n	.05	10			.80	2.4	0.0	15	450m	2	8	BB159	DL16x
40	DAC03BDX2		10	L	B	50m	1.5u	100m	60	5	VU	.80	2.0	15	15	350m	0	7	BB34a	DL18i
41	DAC03CDX2		10	L	B	50m	1.5u	200m	60	5	VU	.80	2.0	15	15	350m	0	7	BB34a	DL18i
42	TEB3410DC		10	L	A	.05	2.0u	0.1	2.5	5.0m	AU	0.8	2.0	15	5.0	380m	0	7	BB268	DL16dq
43	MC3410P		10	M	AE	50m	50m	50m	20	5.0m	AU	.80	2.0	0.0	18	380m	0	7	BB30	DL16ad
44	MC3510P		10	M	AE	50m	50m	50m	20	5.0m	AU	.80	2.0	0.0	18	380m	5	C	BB30	DL16ad
45	DAC100BAN9		10	L	BD	100m	375n	50m	15	10	VBU	.70	2.1	15	15	250m	2	8	BB101	F24-3a
46	DAC100BAQ1		10	L	BD	100m	375n	100m	15	10	VBU	.70	2.1	15	15	250m	2	8	BB38	DL16br
47	DAC100BAQ2		10	L	BD	100m	375n	100m	15	5.0	VBU	.70	2.1	15	15	250m	2	8	BB38	DL16br
48	DAC100BBN9		10	L	BD	100m	375n	50m	30	10	VBU	.70	2.1	15	15	250m	2	8	BB38	F24-3b
49	DAC100BBQ1		10	L	BD	100m	375n	50m	30	10	VBU	.70	2.1	15	15	250m	2	8	BB38	DL16bt
50	DAC100BBQ2		10	L	BD	100m	375n	50m	30	5.0	VBU	.70	2.1	15	15	250m	2	8	BB38	DL16bt
51	DAC100BBQ3		10	L	BD	100m	375n	50m	30	10	VBU	.70	2.1	15	15	250m	0	7	BB38	DL16bt
52	DAC100BBQ4		10	L	BD	100m	375n	50m	30	10	VBU	.70	2.1	15	15	250m	0	7	BB38	DL16bt
53	DAC100BCN9		10	L	BD	100m	375n	50m	60	10	VBU	.70	2.1	15	15	250m	2	8	BB38	F24-3b
54	DAC100BCQ1		10	L	BD	100m	375n	50m	60	10	VBU	.70	2.1	15	15	250m	2	8	BB38	DL16bt
55	DAC100BCQ2		10	L	BD	100m	375n	50m	60	5.0	VBU	.70	2.1	15	15	250m	2	8	BB38	DL16bt
56	DAC02ACX2		10	L	H	100m	1.5u	50m	60	10	VB	.80	2.0	15	15	300m	0	7	BB34	DL18i
57	DAC03ADX2		10	L	B	100m	1.5u	50m	60	5	VU	.80	2.0	15	15	350m	0	7	BB34a	DL18i
58	DAC04ACX2		10	L	CGN	100m	1.5u	50m	90	10	VB	.80	2.0	15	15	300m	0	7	BB34b	DL18i
59	DAC04BCX		10	L	GAC	100m	1.5u	500mØ	90	10	VB	0.8	2.0	15	15	300m	0	7	BB34	DL18i
60	MC3410CP		10	M	AE	100m	50m	100m	20	5.0m	AU	.80	2.0	0.0	18	380m	0	7	BB30	DL16ad
61	DAC101EQ		10	L	A	120m	200n	50m	120	11	VB	.70	2.1	15	15	300m	0	7	BB38	
62	AD7523CDØ		10	M	AC	200m	200n	200m	500	15	VU	.80	2.4	0.3	15	450m	2	8	BB159	DL16bi
63	AD7523LNØ		10	M	AC	200m	200n	200m	500	15	VU	.80	2.4	0.3	15	670m	0	7	BB159	DL16x
64	AD7523UDØ		10	M	AC	200m	200n	200m	500	15	VU	.80	2.4	0.3	15	450m	5	C	BB159	DL16bi
65	DAC100CCN9		10	L	BD	200m	375n	50m	60	10	VBU	.70	2.1	15	15	250m	2	8	BB38	F24-3b
66	DAC100CCQ1		10	L	BD	200m	375n	50m	60	10	VBU	.70	2.1	15	15	250m	2	8	BB38	DL16bt
67	DAC100CCQ2		10	L	BD	200m	375n	50m	60	5.0	VBU	.70	2.1	15	15	250m	2	8	BB38	DL16bt
68	AD7533CDØ		10	M	AC	200m	800n	50m	300	15	VU	.80	2.4	0.3	15	450m	2	8	BB159	DL16bi
69	AD7533LNØ		10	M	AC	200m	800n	50m	300	15	VU	.80	2.4	0.3	15	670m	0	7	BB159	DL16x
70	AD7533UDØ		10	M	AC	200m	800n	50m	300	15	VU	.80	2.4	0.3	15	450m	5	C	BB159	DL16bi
71	DAC04CCX		10	L	GAC	200m	1.5u	500mØ	90	10	VB	0.8	2.0	15	15	300m	0	7	BB34	DL18i
72	DAC06-883AX		10	L	GN	200m	1.5u	50m	60	10	VBU	.80	2.0	15	15	350m	5	C	BB34	DL18i
73	DAC06AX		10	L	GN	200m	1.5u	50m	60	10	VBU	.80	2.0	15	15	350m	5	C	BB34	DL18i
74	DAC101FQ		10	L	A	210m	200n	50m	120	11	VB	.70	2.1	15	15	360m	0	7	BB38	
75	DAC100DDQ5		10	L	A	300m	225n	200m	120	11	VB	.70	2.1	15	15	250	5	C		
76	DAC100DDQ6		10	L	A	300m	225n	200m	120	5.5	VB	.70	2.1	15	15	250	5	C		
77	DAC100DDN9		10	L	BD	300m	375n	50m	120	10	VBU	.70	2.1	15	15	250m	2	8	BB101	F24-3b
78	DAC100DDQ1		10	L	BD	300m	375n	50m	120	10	VBU	.70	2.1	15	15	250m	2	8	BB38	DL16bt
79	DAC100DDQ2		10	L	BD	300m	375n	50m	120	5.0	VBU	.70	2.1	15	15	250m	2	8	BB38	DL16bt
80	DAC101GQ		10	L	A	320m	200n	50m	120	11	VB	.70	2.1	15	15	360m	0	7	BB38	
81	DAC03DDX2		10	L	B	400m	1.5u	50m	60	5.0	VU	.80	2.0	15	15	350m	0	7	BB34a	DL18i
82	DAC04DDX		10	L	GAC	400m	2.5u	500mØ	150	10	VB	0.8	2.0	15	15	350m	0	7	BB34	DL18i
83	HDD0815		10			.50 Ø	15n	500mØ	80		A					2.3	0	7		DLØ
84	HDD0815E		10			.50 Ø	15n	500mØ	80		A					950m	0	7		DLØ
85	HDD0815C		10			.50 Ø	20n	500mØ	80		A					2.3	0	7		DLØ
86	DAC7533C		10	M	AC	.50	800n	.05	-30u			.80	2.4	0.0	15	670m	0	7	BB159	DL16bi
87	DAC7533M		10	M	AC	0.5	800n	0.5	-30u			.80	2.4	0.0	15	450m	5	C	BB159	DL16x
88	DAC7533R		10	M	AC	0.5	800n	0.5	-30u			.80	2.4	0.0	15	450m	2	8	BB159	DL16x
89	DAC05-883AX2		11	L	H	200m	1.5u	25m	60	10	VB	.80	2.0	15	15	350m	5	C	BB98	DL18i
90	DAC05AX2		11	L	H	200m	1.5u	25m	60	10	VB	.80	2.0	15	15	350m	5	C	BB98	DL18i
91	DAC05EX2		11	L	H	200m	1.5u	25m	100	10	VB	.80	2.0	15	15	350m	0	7	BB98	DL18i
92	DAC05-883BX2		11	L	H	300m	1.5u	25m	90	10	VB	.80	2.0	15	15	350m	5	C	BB98	DL18i
93	DAC05BX2		11	L	H	300m	1.5u	25m	90	10	VB	.80	2.0	15	15	350m	5	C	BB98	DL18i
94	DAC05FX2		11	L	H	300m	1.5u	25m	100	10	VB	.80	2.0	15	15	350m	0	7	BB98	DL18i
95	DAC05-883CX2		11	L	H	500m	1.5u	25m	120	10	VB	.80	2.0	15	15	350m	5	C	BB98	DL18i
96	DAC05CX2		11	L	H	500m	1.5u	25m	120	10	VB	.80	2.0	15	15	350m	5	C	BB98	DL18i
97	DAC05GX2		11	L	H	500m	1.5u	25m	100	10	VB	.80	2.0	15	15	350m	0	7	BB98	DL18i
98	7581C		12		ACG		6.0u		100	20	V	.80	2.4	10	10		0	7		
99	7541C		12	M	A	2.0m	1.0u	10m	4.0		VBU	.80	2.4	0.0	15	20m	0	7	BB156	DL18aj
100	7541M		12	M	A	2.0m	1.0u	10m	4.0		VBU	.80	2.4	0.0	15	20m	5	C	BB156	DL18aj
101	7580I		12	M	BDM	2.0m	6.0u	10m	30	20	ABU	.80	2.4	0.0	15		0	7	BB212a	DL24bn
102	7580VS		12	M	BDM	2.0m	12u	10m	30	20	VU	.80	2.4	0.0	15		0	7	BB212	DL24bn
103	7580V		12	M	BDMM	2.0m	50u	10m	30	20	VU	.80	2.4	0.0	15		0	7	BB212	DL24bn
104	SSS562-883-BIN		12	M	A	6.0m	1.5u	12m	3.0	20	VBU	.80	2.0	15	15	375m	5	C	BB161	DL24an
105	SSS562-SD-BIN		12	M	A	6.0m	1.5u	12m	3.0	20	VBU	.80	2.0	15	15	375m	5	C	BB161	DL24an
106	DAC862BG		12	M	ACG	6m	3.5u		5	2.0m	A	0.8	2.0	15	15		2	8	BB217	DL24ba
107	uA9706ADC		12	P	A	10m						.80	2.7	0.0	5.0	1.0m	0	8	BB193	DL16h
108	uA9706APC		12	P	A	10m						.80	2.7	0.0	5.0	1.0m	0	8	BB192	DL16ak
109	uA9706PC		12	P	A	10m						.80	2.7	0.0	5.0	1.0m	0	8	BB192	DL14bn

SYMBOLS AND CODES EXPLAINED IN INTERPRETER

9. D/A CONVERTERS

IN ORDER OF: (1)BITS RES (2)MAX FSR ERROR (3)MAX SETTLING TIME & (4)TYPE NUMBER

LINE No.	4 TYPE NUMBER	DATA SHT.	1 BITS RES	CONV TYPE	INPUT ARITH CODE OPTION	2 MAX FSR LINE. ERROR (%)	3 MAX SETTLING TIME (S)	MAX GAIN TEMP ACCUR (%)	MAX GAIN TEMP DRIFT ppm/C	OUTPUT MAX RANGE P-P	OUTPUT MAX RANGE MODE	INPUT LOGIC LEVELS MAX '0' (V)	INPUT LOGIC LEVELS MIN '1' (V)	RATED PWR SUP SPAN NEG (V)	RATED PWR SUP SPAN POS (V)	MAX OPER POWER DISS (W)	OPER TEMP RANGE CODE -	OPER TEMP RANGE CODE +	DRAWINGS LOGIC OR BLOCK	DRAWINGS OUTLINE Δ=MO
1	DAC12-883AV		12	M	ABC	10m	750n	10m	10	2.6	AB	.80	2.0	15	15	375m	5	C	BB210	
2	DAC7541C		12	M	AC	.01	1.0u	.01				.80	2.4	0.0	15	450m	0	7	BB159a	DL18k
3	DAC7541M		12	M	AC	.01	1.0u	.01				.80	2.4	0.0	15	450m	5	C	BB159a	DL18k
4	DAC7541R		12	M	AC	.01	1.0u	.01				.80	2.4	0.0	15	450m	2	8	BB159a	DL18k
5	ICL7112JPN		12	M	AC	10m	1.0u	10m	5.0	20	VB	.80	3.0	0.0	15	30m	0	7	BB159a	DL18o
6	ICL7112KPN		12	M	AC	10m	1.0u	10m	5.0	20	VB	.80	3.0	0.0	15	30m	0	7	BB159a	DL18o
7	ICL7112LPN		12	M	AC	10m	1.0u	10m	5.0	20	VB	.80	3.0	0.0	15	30m	0	7	BB159a	DL18o
8	SSS562-883-BCD		12	M	E	10m	1.5u	50m	3.0	20	VBU	.80	2.0	15	15	375m	5	C	BB161	DL24an
9	SSS562-SD-BCD		12	M	E	10m	1.5u	50m	3.0	20	VBU	.80	2.0	15	15	375m	5	C	BB161	DL24an
10	DAC12G		12	L	BDGN	12m	400n	12m	5.0	40	VU	.80	2.0	15	15	390m	6	F	BB210	CH41
11	DAC12GR		12	L	BDGN	12m	400n	12m	5.0	40	VU	.80	2.0	15	15	390m	6	F	BB210	CH41
12	DAC-681C		12	L	AC	12m	400n	25m	5.0	20	VB	.80	2.0	15	5	465m	0	7	BB189	DL24ae
13	DAC-681M		12	L	AC	12m	400n	25m	5.0	20	VB	.80	2.0	15	5	465m	5	C	BB189	DL24ae
14	DAC12AV		12	L	BDGN	12m	700n	12m	5.0	25	VBU	.80	2.0	15	15	150m	5	C	BB210	DL24an
15	DAC12BV		12	L	BDGN	12m	700n	12m	5.0	25	VBU	.80	2.0	15	15	150m	5	C	BB210	DL24an
16	DAC12EV		12	L	BDGN	12m	700n	12m	5.0	25	VBU	.80	2.0	15	15	150m	0	7	BB210	DL24an
17	DAC12FV		12	L	BDGN	12m	700n	12m	5.0	25	VBU	.80	2.0	15	15	150m	0	7	BB210	DL24an
18	SSS562-AD-BIN		12	M	A	12m	1.5u	12m	3.0	20	VBU	.80	2.0	15	15	375m	2	8	BB161	DL24an
19	SSS562-KD-BIN		12	M	A	12m	1.5u	12m	3.0	20	VBU	.80	2.0	15	15	375m	0	7	BB161	DL24an
20	7545C		12	M	A§	12m	2.0u	10m	2.0	20	VB	.80	3.0	0.0	15	20m	0	7	BB157	DL30a
21	7545M		12	M	A§	12m	2.0u	10m	2.0	20	VB	.80	3.0	0.0	15	20m	5	C	BB157	DL30a
22	DAC862KG		12	M	ACG	12m	3.5u		5	2.0m	A	0.8	2.0	15	15		0	7	BB217	DL24ba
23	DAC863BG		12	L	ACG	12m	3.5u		10	2.0m	A	0.8	2.0	15	15		2	8	BB218	DL24ba
24	DAC863KG		12	L	ACG	12m	3.5u		10	2.0m	A	0.8	2.0	15	15		0	7	BB218	DL24ba
25	MB00080		12	L	BD	12m	5.0u	10m	30	20	VBU	0.8	2.0	15	15	850m	5	7		
26	7546C		12	M	AK§	12m	10u	10m	20	20	VB	.80	3.0	15	15	200m	0	7	BB158	D36-1
27	7546M		12	M	AK§	12m	10u	10m	20	20	VB	.80	3.0	15	15	200m	5	C	BB158	D36-1
28	DAC12-883BV		12	M	ABC	20m	750n	10m	20	2.6	AB	.80	2.0	15	15	375m	5	C	BB210	
29	ICL7112JJN		12	M	AC	20m	1.0u	10m	5.0	20	VB	.80	3.0	0.0	15	30m	2	8	BB159a	DL18k
30	ICL7112KJN		12	M	AC	20m	1.0u	10m	5.0	20	VB	.80	3.0	0.0	15	30m	2	8	BB159a	DL18k
31	ICL7112SJN		12	M	AC	20m	1.0u	10m	5.0	20	VB	.80	3.0	0.0	15	30m	5	C	BB159a	DL18k
32	ICL7112TJN		12	M	AC	20m	1.0u	10m	5.0	20	VB	.80	3.0	0.0	15	30m	5	C	BB159a	DL18k
33	DAC12GV		12	L	BDGN	25m	700n	12m	20	25	VBU	.80	2.0	15	15	150m	0	7	BB210	DL24an
34	DAC921LG		12	M	B	50m	50n	12m	10	2.0m	ABU	.80	2.0	0.0	15	30m	0	7	BB88	DL18z
35	DAC921TG		12	M	B	50m	50n	12m	10	2.0m	ABU	.80	2.0	0.0	15	30m	5	C	BB88	DL18z
36	DAC7521C		12	M	AC	.05	500n	.05	10			.80	2.4	0.0	15	450m	0	7	BB159a	DL18o
37	DAC7521M		12	M	AC	.05	500n	.05	10			.80	2.4	0.0	15	450m	5	C	BB159a	DL18k
38	DAC7521R		12	M	AC	.05	500n	.05	10			.80	2.4	0.0	15	450m	2	8	BB159a	DL18k
39	DAC12HV		12	L	BDGN	50m	700n	12m	20	25	VBU	.80	2.0	15	15	150m	0	7	BB210	DL24an
40	SSS562-AD-BCD		12	M	E	50m	1.5u	50m	3.0	20	VBU	.80	2.0	15	15	375m	2	8	BB161	DL24an
41	SSS562-KD-BCD		12	M	E	50m	1.5u	50m	3.0	20	VBU	.80	2.0	15	15	375m	0	7	BB161	DL24an
42	DAC921KG		12	M	B	100m	50n	12m	10	2.0m	ABU	.80	2.0	0.0	15	30m	0	7	BB88	DL18z
43	DAC921SG		12	M	B	100m	50n	12m	10	2.0m	ABU	.80	2.0	0.0	15	30m	5	C	BB88	DL18z
44	DAC12GV#		12	M	ABC	100m	750n	10m		2.0	AB	.80	2.0	15	15	480m	0	7	BB210	
45	DAC04N		12	L	G	100m	1.5u	12m	60	11	VBU	.80	2.0	15	15	300m	6	F	♦	CH24a
46	DAC921JG		12	M	B	200m	50n	12m	10	2.0m	ABU	.80	2.0	0.0	15	30m	0	7	BB88	DL18z
47	DAC921RG		12	M	B	200m	50n	12m	10	2.0m	ABU	.80	2.0	0.0	15	30m	5	C	BB88	DL18z
48	DAC04G		12	L	G	200m	1.5u	12m	60	11	VBU	.80	2.0	15	15	300m	6	F	♦	CH24a
49	DAC04NT		12	L	GNC	200m	1.5u	500mØ	60	10	VB	0.8	2.0	15	15	350m	0	7	BB34b	CH86
50	HI565AKD/B1N		12	L	A	.25 Ø	500n	.5 Ø	25	20	V	0.8	2.0		18	1.0	0	7	BB317	DL24c
51	DAC862BG-BIN		12	M	ACG	250mØ	3.5u	500mØ	5	2.0m	ABU	0.8	2.0	15	15		2	8	BB218	DL24ba
52	DAC862SG-BIN		12	M	ACG	250mØ	3.5u	500mØ	5	2.0m	ABU	0.8	2.0	15	15		5	C	BB218	DL24ba
53	DAC863BG-BIN		12	L	ACG	250mØ	3.5u	500mØ	5	2.0m	ABU	0.8	2.0	15	15		2	8	BB218	DL24ba
54	DAC04GR		12	L	G	400m	1.5u	12m	90	11	VBU	.80	2.0	15	15	350m	6	F	♦	CH24a
55	DAC04GT		12	L	GNC	400m	1.5u	500mØ	60	10	VB	0.8	2.0	15	15	350m	0	7	BB34b	CH86
56	AD566ATD/883B		12	M	A	0.5 Ø	350n	0.5 Ø	3.0	2.4m	AU	0.80	2.0	15		1.0	5	C	BB227	DL24bf
57	AD565TD/883B		12	L	A	0.5 Ø	400n	0.5 Ø	15	2.4m	AU	0.80	2.0	15	15	1.0	5	C	BB193	DL24bf
58	DAC12AV#mil		12	L	G	0.5 Ø	750n	0.5 Ø	10	2.6m	AB	0.8	2.0	16	16	500m	5	C	BB96	DL24an
59	DAC12BV#mil		12	L	G	0.5 Ø	750n	0.5 Ø	20	2.6m	AB	0.8	2.0	16	16	500m	5	C	BB96	DL24an
60	AD7542GKN		12	M	A	0.5 Ø	2.0u	0.5 Ø	5.0			0.80	3.0		5.0	670m	0	7	BB294	DL16aa
61	AD7543TD/883B		12	M	A	0.5 Ø	2.0u	0.5 Ø	5.0			0.80	3.0		5.0	450m	5	C	BB295	DL16cz
62	DAC862KG-BIN		12	M	ACG	500mØ	3.5u	500mØ	5	2.0m	ABU	0.8	2.0	15	15		0	7	BB218	DL24ba
63	DAC863KG-BIN		12	L	ACG	500mØ	3.5u	500mØ	5	2.0m	ABU	0.8	2.0	15	15		0	7	BB218	DL24ba
64	AD566ASD/883B		12	M	A	.75 Ø	350n	0.5 Ø	10	2.4m	AU	0.80	2.0	15		1.0	5	C	BB227	DL24bf
65	AD565SD/883B		12	L	A	.75 Ø	400n	0.5 Ø	30	2.4m	AU	0.80	2.0	15	15	1.0	5	C	BB193	DL24bf
66	AD7543SD/883B		12	M	A	1.0 Ø	2.0u	0.5 Ø	5.0			0.80	3.0		5.0	450m	5	C	BB295	DL16cz

SYMBOLS AND CODES EXPLAINED IN INTERPRETER

10. LOGIC LEVEL CONVERTERS/LEVEL TRANSLATORS

IN ORDER OF: (1)TECHN (2)CONV FROM (3)CONV TO (4)DEV CKTS & (5)TYPE NUMBER

LINE No.	5 TYPE NUMBER	DATA SHT.	CONVERTS 2 FROM	CONVERTS 3 TO	4 DC EK VT S	LOG FUNC CODE	LI ON GP	MIN OUTPUT SINK CURR (A)	° OUT (V)	1 T E C H N	INPUT LOGIC LEVELS MAX '0' (V)	INPUT LOGIC LEVELS MIN '1' (V)	RATED PWR SUP SPAN NEG (V)	RATED PWR SUP SPAN POS (V)	MAX PROP DELAY (S)	MAX OPER POWER DISS (W)	OPER TEMP RANGE CODE -	OPER TEMP RANGE CODE +	DRAWINGS LOGIC OR BLOCK	DRAWINGS OUTLINE Δ=MO
1	9643DC		DT	M	2	AND	1	10m	.50		.80	2.0	0.0	12	17n	210m	0	7	BC6a	DL14ao
2	9643PC		DT	M	2	AND	1	10m	.50		.80	2.0	0.0	12	17n	210m	0	7	BC6a	DL14bn
3	9643RC		DT	M	2	AND	1	10m	.50		.80	2.0	0.0	12	17n	210m	0	7	BC7b	DL8f
4	9644RC		DT	M	2	NAND	1	10m	.50		.80	2.0	0.0	12	15n	200m	0	7	BC7c	DL8f
5	9644TC		DT	M	2	NAND	1	10m	.50		.80	2.0	0.0	12	15n	200m	0	7	BC7c	DL8q
6	9645DC		DT	M	4	INV	1	5.0m	.45		.80	2.0	0.0	12	11n	373m	0	7	BC21	DL16i
7	9645PC		DT	M	4	INV	1	5.0m	.45		.80	2.0	0.0	12	11n	373m	0	7	BC21	DL16ak
8	CTS0034H-B		DT	M	2	NAND	2	50m	-25	BPR	0.80	2.0	25	25	60n		5	C	BC80	TO100
9	883/4050		C	DT		NIIV		3.0	0.4	CMS				15			0	7	40-10B	dl16Ø
10	CD4041BD		C	DT	4	NIIV	1	19m	1.5	CMS	.05	14.9	0.0	15	50n	500m	5	C	BC29	Δ001AD
11	CD4041BE		C	DT	4	NIIV	1	19m	1.5	CMS	.05	14.9	0.0	15	50n	500m	4	8	BC29	Δ001AB
12	CD4041BF		C	DT	4	NIIV	1	19m	1.5	CMS	.05	14.9	0.0	15	50n	500m	5	C	BC29	Δ001AB
13	CD4041BH		C	DT	4	NIIV	1	19m	1.5	CMS	.05	14.9	0.0	15	50n		5	C	BC29	CH60
14	CD4041BK		C	DT	4	NIIV	1	19m	1.5	CMS	.05	14.9	0.0	15	50n	500m	5	C	BC29	Δ004AG
15	CD4041BY		C	DT	4	NIIV	1	19m	1.5	CMS	.05	14.9	0.0	15	50n	500m	4	8	BC29	Δ001AB
16	HEF4041P		C	DT	4	NIIV	1	2.0m	.50	CMS	3.0	7.0	0.0	10	20n	400m	4	8	BC29	DL14y
17	CD4009AY		C	DT	6	INV	1	8.0m	.50	CMS	.05	9.95	0.0	12	70n	50u	4	8	40-09A	Δ001AC
18	CD4009BD		C	DT	6	INV	1	24m	1.5	CMS	.05	14.9	0.0	15	60n	500m	5	C	BC27	Δ001AE
19	CD4009BE		C	DT	6	INV	1	24m	1.5	CMS	.05	14.9	0.0	15	60n	500m	4	8	BC27	Δ001AC
20	CD4009BF		C	DT	6	INV	1	24m	1.5	CMS	.05	14.9	0.0	15	60n	500m	5	C	BC27	Δ001AC
21	CD4009BH		C	DT	6	INV	1	24m	1.5	CMS	.05	14.9	0.0	15	60n		5	C	BC27	CH58
22	CD4009BK		C	DT	6	INV	1	24m	1.5	CMS	.05	14.9	0.0	15	60n	500m	5	C	BC27	Δ004AG
23	CD4009BY		C	DT	6	INV	1	24m	1.5	CMS	.05	14.9	0.0	15	60n	500m	4	8	BC27	Δ001AC
24	CD4009UBK		C	DT	6	INV	1	24m	1.5	CMS	3.0	12	0.0	15	60n	500m	5	C	BC27	Δ004AG
25	CD4010AY		C	DT	6	NIV	1	8.0m	.50	CMS	.05	9.95	0.0	12	70n	50u	4	8	40-10B	Δ001AC
26	CD4010BK		C	DT	6	NIV	1	24m	1.5	CMS	4.0	11	0.0	15	70n	500m	5	C	BC27a	Δ001AG
27	CD4010BY		C	DT	6	NIV	1	24m	1.5	CMS	.05	14.9	0.0	15	70n	500m	4	8	BC27a	Δ001AC
28	CD4049AY		C	DT	6	INV	1	8.0m	.50	CMS	3.0	7.0	0.0	10	55n	50u	4	8	AA50c	Δ001AC
29	CD4049BD		C	DT	6	INV	1	48m	1.5	CMS	.05	14.9	0.0	15	50n	500m	5	C	AA50c	Δ001AE
30	CD4049BE		C	DT	6	INV	1	48m	1.5	CMS	.05	14.9	0.0	15	50n	500m	4	8	AA50c	Δ001AC
31	CD4049BF		C	DT	6	INV	1	48m	1.5	CMS	.05	14.9	0.0	15	50n	500m	5	C	AA50c	Δ001AC
32	CD4049BH		C	DT	6	INV	1	48m	1.5	CMS	.05	14.9	0.0	15	50n		5	C	AA50c	CH59
33	CD4049BK		C	DT	6	INV	1	48m	1.5	CMS	.05	14.9	0.0	15	50n	500m	5	C	AA50c	Δ001AG
34	CD4049BY		C	DT	6	INV	1	48m	1.5	CMS	.05	14.9	0.0	15	50n	500m	4	8	AA50c	Δ001AC
35	CD4049UBK		C	DT	6	INV	1	24m	1.5	CMS	3.0	12	0.0	15	50n	500m	5	C	AA50c	Δ004AG
36	CD4050AY		C	DT	6	NIV	1	8.0m	.50	CMS	3.0	7.0	0.0	10	85n	50u	4	8	BC28	Δ001AC
37	CD4050BK		C	DT	6	NIV	1	24m	1.5	CMS	4.0	11	0.0	15	60n	500m	5	C	BC28	Δ004AG
38	CD4050BY		C	DT	6	NIV	1	48m	1.5	CMS	.05	14.9	0.0	15	60n	500m	4	8	AA54a	Δ001AC
39	SCL4009AC		C	DT	6	INV	1	35m	1.5	CMS	0.0	15	0.0	15	28n	300m	5	C	BC27	D14-19
40	SCL4009AD		C	DT	6	INV	1	35m	1.5	CMS	0.0	15	0.0	15	28n	300m	5	C	BC27	D14-19a
41	SCL4009AE		C	DT	6	INV	1	35m	1.5	CMS	0.0	15	0.0	15	28n	300m	4	8	BC27	D14-19b
42	SCL4009AF		C	DT	6	INV	1	35m	1.5	CMS	0.0	15	0.0	15	28n	300m	5	C	BC27	F16-6
43	SCL4009AH		C	DT	6	INV	1	35m	1.5	CMS	0.0	15	0.0	15	28n	300m	5	C	BC27	CHØ
44	SCL4010AC		C	DT	6	NIV	1	35m	1.5	CMS	0.0	15	0.0	15	28n	300m	5	C	BC27a	D14-19
45	SCL4010AD		C	DT	6	NIV	1	35m	1.5	CMS	0.0	15	0.0	15	28n	300m	5	C	BC27a	D14-19a
46	SCL4010AE		C	DT	6	NIV	1	35m	1.5	CMS	0.0	15	0.0	15	28n	300m	4	8	BC27a	D14-19b
47	SCL4010AF		C	DT	6	NIV	1	35m	1.5	CMS	0.0	15	0.0	15	28n	300m	5	C	BC27a	F16-6
48	SCL4010AH		C	DT	6	NIV	1	35m	1.5	CMS	0.0	15	0.0	15	28n	300m	5	C	BC27a	CHØ
49	SCL4049AC		C	DT	6	INV	1	40m	1.5	CMS	0.0	15	0.0	15	28n	300m	5	C	AA50c	D14-19
50	SCL4049AD		C	DT	6	INV	1	40m	1.5	CMS	0.0	15	0.0	15	28n	300m	5	C	AA50c	D14-19a
51	SCL4049AE		C	DT	6	INV	1	40m	1.5	CMS	0.0	15	0.0	15	28n	300m	4	8	AA50c	D14-19b
52	SCL4049AF		C	DT	6	INV	1	40m	1.5	CMS	0.0	15	0.0	15	28n	300m	5	C	AA50c	F16-6
53	SCL4049AH		C	DT	6	INV	1	40m	1.5	CMS	0.0	15	0.0	15	28n	300m	5	C	AA50c	CHØ
54	SCL4050AC		C	DT	6	NIV	1	40m	1.5	CMS	0.0	15	0.0	15	30n	300m	5	C	BC28	D14-19
55	SCL4050AD		C	DT	6	NIV	1	40m	1.5	CMS	0.0	15	0.0	15	30n	300m	5	C	BC28	D14-19a
56	SCL4050AE		C	DT	6	NIV	1	40m	1.5	CMS	0.0	15	0.0	15	30n	300m	4	8	BC28	D14-19b
57	SCL4050AF		C	DT	6	NIV	1	40m	1.5	CMS	0.0	15	0.0	15	30n	300m	5	C	BC28	F16-6
58	SCL4050AH		C	DT	6	NIV	1	40m	1.5	CMS	0.0	15	0.0	15	30n	300m	5	C	BC28	CHØ
59	TP4009UBN		C	DT	6	INV	1	3.0m	1.5	CMS	3.0	12.0	0.0	15		240u	4	8		DL16ac
60	TP4010BN		C	DT	6	NIV	1	3.0m	1.5	CMS	4.0	11.0	0.0	15		240u	4	8		DL16ac
61	CD4041AY		C	T	4	NIIV	1	1.0m	.50	CMS	3.0	7.0	0.0	12	100n	200u	4	8	40-41A	Δ001AB
62	CD4041UBK		C	T	4	NIIV	1	19m	1.5	CMS	3.0	12	0.0	15	50n	500m	5	C	40-41A	Δ004AF
63	MD4104BC		CNT	C	4	NIIV	1	3.6m	5.0	CMS	4.5	10.5	0.0	15	65n		4	8	BC59	DLØ
64	CM4104AD		T	C	4	NIIV	1	2.0m	.50	CMS	.01	9.99	0.0	10	700n	200m	5	C	BC40	DL16bs
65	CM4104AE		T	C	4	NIIV	1	2.0m	.50	CMS	.01	9.99	0.0	10	900n	200m	4	8	BC40	DLØ
66	CM4104AF		T	C	4	NIIV	1	2.0m	.50	CMS	.01	9.99	0.0	10	700n	200m	5	C	BC40	DL16bs
67	CM4104AH		T	C	4	NIIV	1			CMS	.01	9.99	0.0	10			5	C	BC40	CHØ
68	G4104CI#ai		TN	C	4	NIIV	1	0.4m	15.0	CMS	4.5	10.5	0.5	8.0	75n		4	8	BC79	
69	G4104CM#ai		TN	C	4	NIIV	1	0.4m	15.0	CMS	4.5	10.5	0.5	8.0	75n		5	C	BC79	
70	G4104P#ai		TN	C	4	NIIV	1	0.4m	15.0	CMS	4.5	10.5	0.5	18	75n		0	7	BC79	
71	G4104PI#ai		TN	C	4	NIIV	1	0.4m	15.0	CMS	4.5	10.5	0.5	8.0	75n		4	8	BC79	
72	ITT75361AJ		DT	M	2	NAND	2	40m	.50	DTL	.80	2.0	0.0	20	55n	340m	0	7	BC7a	D14-1d
73	ITT75361AN		DT	M	2	NAND	2	40m	.50	DTL	.80	2.0	0.0	20	55n	340m	0	7	BC7a	DL14d
74	ITT75361AP		DT	M	2	NAND	2	40m	.50	DTL	.80	2.0	0.0	20	55n	340m	0	7	BC7	D08-4d
75	ITT75365J		DT	M	4	NAND	3	40m	.50	DTL	.80	2.0	0.0	20	48n	510m	0	7	BC8	D16-2d
76	ITT75365N		DT	M	4	NAND	3	40m	.50	DTL	.80	2.0	0.0	20	48n	510m	0	7	BC8	D16-2c
77	361BL		H	DRT	2	NAND	2	6.4m	.40	DTL	5.0	6.5	0.0	12	325n	96m	5	C	BC2	DL16c
78	361ML		H	DRT	2	NAND	2	6.4m	.40	DTL	5.0	6.5	0.0	15	325n	165m	5	C	BC2	DL16c
79	363BL		T	H	4	NAND	3	10m	1.5	DTL	.80	2.0	0.0	12	600n	612m	5	C	BC4	DL16c
80	363ML		T	H	4	NAND	3	13m	1.8	DTL	.80	2.0	0.0	15	600n	960m	5	C	BC4	DL16c
81	9624DC		T	M	2	NAND	3	10m	1.0	DTL	1.1	1.9	0.0	5.0	250n	30m	0	7	BC25	DL14ao
82	9624DM		T	M	2	NAND	3	10m	1.0	DTL	1.1	1.9	0.0	5.0	250n	30m	5	C	BC25	DL14ao
83	9624PC		T	M	2	NAND	3	10m	1.0	DTL	1.1	1.9	0.0	5.0	250n	30m	0	7	BC25	DL14bn
84	362BL		TR	H	2	NAND	4	10m	1.5	DTL	.80	2.0	0.0	12	400n	120m	5	C	BC3	DL16c
85	362ML		TR	H	2	NAND	4	13m	1.8	DTL	.80	2.0	0.0	15	400n	195m	5	C	BC3	DL16c
86	MC1017P		D	K	2	AND	4	2.5m	-.70	ECL	1.0	1.9	5.2	5.0	20n	105m	0	7	BC44	TO116
87	MC1217F		D	K	2	AND	4	2.5m	-.70	ECL	1.0	2.0	5.2	5.0	20n	105m	5	C	BC44	TO86
88	MC1217L		D	K	2	AND	4	2.5m	-.70	ECL	1.0	2.0	5.2	5.0	20n	105m	5	C	BC44	TO116
89	MC1067P		DT	K	4	NAAD	1	2.5m	-.70	ECL	-1.5	-.85	5.2	5.0	8.0n	350m	0	7	BC23	DL16ad
90	MC1267F		DT	K	4	NAND	1	2.5m	-.70	ECL	-1.5	-.85	5.2	5.0	8.0n	350m	5	C	BC23	F16-11
91	MC1267L		DT	K	4	NAAD	1	2.5m	-.70	ECL	-1.5	-.85	5.2	5.0	8.0n	350m	5	C	BC23	DL16at
92	MC1018P		K	D	1	ORNO	4	12m	.45	ECL	-1.3	-1.0	5.2	5.0	25n	55m	0	7	BC45	TO116
93	MC1218F		K	D	1	ORNO	4	12m	.40	ECL	-1.3	-1.0	5.2	5.0	25n	55m	5	C	BC45	TO86
94	MC1218L		K	D	1	ORNO	4	12m	.40	ECL	-1.3	-1.0	5.2	5.0	25n	55m	5	C	BC45	TO116
95	MC1039P		K	D	4	OR	2	12m	.40	ECL	-1.3	-1.0	5.2	5.0	16n	200m	0	7	BC46	DL16ad
96	MC1239L		K	D	4	OR	2	12m	.40	ECL	-1.3	-1.0	5.2	5.0	16n	200m	5	C	BC46	TO116
97	SP1039		K	D	4	OR	2	2.5m	-1.5	ECL	-1.3	-1.0	5.2	0.0	12n	200m	0	7	BC22	D16-7e
98	SP1239		K	D	4	OR	2	2.5m	-1.5	ECL	-1.3	-1.0	5.2	0.0	12n	200m	5	C	BC22	D16-7e
99	MC1068P		K	DT	4	NOR	2	20m	.50	ECL	-1.3	-1.0	5.2	5.0	5.0n	468m	0	7	AA15b	DL16ad
100	MC1268F		K	DT	4	NOR	2	20m	.50	ECL	-1.3	-1.0	5.2	5.0	5.0n	468m	5	C	AA15b	F16-11
101	MC1268L		K	DT	4	NOR	2	20m	.50	ECL	-1.3	-1.0	5.2	5.0	5.0n	468m	5	C	AA15b	DL16at
102	10125FC		L	T	4	NIIV	2	20m	.50	ECL	-1.4	-1.1	5.2	0.0	6.0n	200m	0	7	BC24	F16-3
103	10125PC		L	T	4	NIIV	2	20m	.50	ECL	-1.4	-1.1	5.2	0.0	6.0n	200m	0	7	BC24	DL16ak
104	10124FC		T	L	4	NIIV	2			ECL	1.1	1.8	5.2	0.0	6.0n	176m	0	7	BC65	F16-3
105	10124PC		T	L	4	NIIV	2			ECL	1.1	1.8	5.2	0.0	6.0n	176m	0	7	BC65	DL16ak
106	9625DC		M	T	2	NIV	1	1.5m	.50	RTL	-9.0	-3.0	0.0	5.0	150n	24m	0	7	BC26	DL14ao
107	9625DM		M	T	2	NIV	1	1.5m	.50	RTL	-9.0	-3.0	0.0	5.0	150n	24m	5	C	BC26	DL14ao
108	9625PC		M	T	2	NIV	1	1.5m	.50	RTL	-9.0	-3.0	0.0	5.0	150n	24m	0	7	BC26	DL14bn
109	N8T90W		DT	HM	6	INV	1	7.2m	.35	TTL	.60	2.0	0.0	5.0	55n	114m	0	7	54S05W	F14-8
110	N8T80A		DT	M	4	NAND	2	20m	1.0	TTL	.60	2.0	0.0	5.0	55n	80m	0	7	AA59b	DL14b

SYMBOLS AND CODES EXPLAINED IN INTERPRETER

10. LOGIC LEVEL CONVERTERS/LEVEL TRANSLATORS

IN ORDER OF: (1)TECHN (2)CONV FROM (3)CONV TO (4)DEV CKTS & (5)TYPE NUMBER

LINE No.	5 TYPE NUMBER	DATA SHT.	CONVERTS 2 FROM	3 TO	4 DEVCKTS	LOGIC FUNC CODE	LIONGP	MIN OUTPUT SINK CURR (A)	° OUT (V)	1 TECHN	INPUT LOGIC LEVELS MAX '0' (V)	MIN '1' (V)	RATED PWR SUP SPAN NEG (V)	POS (V)	MAX PROP DELAY (S)	MAX OPER POWER DISS (W)	OPER TEMP RANGE CODE -	+	DRAWINGS LOGIC OR BLOCK	OUTLINE Δ=MO
1	N8T80W		DT	M	4	NAND	2	20m	1.0	TTL	.60	2.0	0.0	5.0	55n	80m	0	7	54LS01W	DL14ap
2	N8T90A		DT	M	6	INV	1	7.2m	.35	TTL	.60	2.0	0.0	5.0	55n	120m	0	7	BC56a	F14-2d
3	N8T18A		H	T	2	NAND	2	7.2m	.35	TTL	6.5	9.0	0.0	24	20n	88m	0	7	BC54a	DL14b
4	N8T18W		H	T	2	NAND	2	7.2m	.35	TTL	6.5	9.0	0.0	24	20n	88m	0	7	BC54	F14-2d
5	MC75358L		L	MT	2	NONI	3	10m	.30	TTL	-1.6	-1.5	5.2	20	56n	1.0	0	7	BC9	TO116
6	MC75358P		L	MT	2	NONI	3	10m	.30	TTL	-1.6	-1.5	5.2	20	56n	830m	0	7	BC9	DL14be
7	MC75368L		L	MT	2	NONI	3	10m	.30	TTL	-1.6	-1.5	5.2	24	57n	1.0	0	7	BC9	TO116
8	MC75368P		L	MT	2	NONI	3	10m	.30	TTL	-1.6	-1.5	5.2	24	57n	830m	0	7	BC9	DL14be
9	9625FM		M	T	2	NIV	1	1.5m	.50	TTL	-9.0	-3.0	0.0	5.0	150n	24m	5	C	BC26	TO86
10	MC54468F		M	T	2	INV	1	16m	.40	TTL	.40	2.4	0.0	5.0	30n	150m	5	C	54-468F	TO86
11	MC54468L		M	T	2	INV	1	16m	.40	TTL	.40	2.4	0.0	5.0	30n	150m	5	C	74-468P	TO116
12	MC74468F		M	T	2	INV	1	16m	.40	TTL	.40	2.5	0.0	5.0	30n	150m	0	7	54-468F	TO86
13	MC74468L		M	T	2	INV	1	16m	.40	TTL	.40	2.5	0.0	5.0	30n	150m	0	7	74-468P	TO116
14	MC74468P		M	T	2	INV	1	16m	.40	TTL	.40	2.5	0.0	5.0	30n	150m	0	7	74-468P	DL14be
15	uA3448ADC		MT	G♦	4	NIV	2	48m	.50	TTL	.80	2.0	0.0	5.0	17n	625m	0	7	DB50	DL16h
16	uA3448APC		MT	G♦	4	NIV	2	48m	.50	TTL	.80	2.0	0.0	5.0	17n	625m	0	7	DB50	DL16ak
17	9624FM		T	M	2	NAND	3	10m	1.0	TTL	.95	2.0	0.0	5.0	250n	30m	5	C	BC25	TO86
18	75361AF		T	M	2	NAND	1	10m	.30	TTL	.80	2.0	0.0	20	55n	1.3	0	7	BC7a	DL14ap
19	75361AV		T	M	2	NAND	1	10m	.30	TTL	.80	2.0	0.0	20	55n	1.0	0	7	BC7	DL8s
20	DS75361J		T	M	2	NAND	1	40m	.50	TTL	.80	2.0	0.0	20	55n	220m	0	7	BC7a	DL14an
21	DS75361N-8		T	M	2	NAND	1	40m	.50	TTL	.80	2.0	0.0	24	55n	390m	0	7	BC7	DL8r
22	DS75362J		T	M	2	INV	1	40m	.50	TTL	.80	2.0	0.0	24	48n	123m	0	7	BC20a	DL14an
23	DS75362N-8		T	M	2	INV	1	40m	.50	TTL	.80	2.0	0.0	24	48n	509m	0	7	BC20	DL8r
24	DS7810W		T	M	4	NAND	2	16m	.40	TTL	.80	2.0	0.0	5.0	45n	102m	5	C	54S03W	F14-5
25	DS7811W		T	M	4	NAND	2	16m	.40	TTL	.80	2.0	0.0	5.0	45n	102m	5	C	54LS01W	F14-5
26	DS7819W		T	M	4	AND	2	16m	.40	TTL	.80	2.0	0.0	5.0	32n	165m	5	C	74-09N	F14-5
27	DS78L12W		T	M	6	INV	1	3.6m	.40	TTL	.70	2.0	0.0	5.0	100n	15m	5	C	54S05W	F14-5
28	DS7812W		T	M	6	NAND	1	16m	.40	TTL	.80	2.0	0.0	5.0	45n	153m	5	C	54S05W	F14-5

11. ANALOG GATE SWITCHES BILATERAL,MULTIPLE

IN ORDER OF: (1)TECHN (2)SW FORM (3)SWS/CKT (4)DEV CKTS & (5)TYPE NUMBER

LINE No.	5 TYPE NUMBER	DATA SHT.	2 SF WO R M	3 SWS PER CKT	4 DC EK VT S	MAXIMUM SW VOLT P-P (V)	MAXIMUM SW CURR P-P (A)	MAXIMUM DRAIN/ SOURCE ON RESISTANCE RDS (Ω)	° VD (V)	° IS (A)	1 T E C H N	CONTROL LOGIC LEVELS MAX '0' (V)	MIN '1' (V)	RATED PWR SUP SPAN NEG (V)	POS (V)	MAX ON TIME tON (S)	MAX OPER POWER DISS (W)	OPER TEMP RANGE CODE -	+	DRAWINGS LOGIC OR BLOCK	OUTLINE Δ=MO
1	7510G		A	1	4		25m	100	0.0	1.0m		.80	2.0	15	15	1.0u	112m	6	F	♦	CH42
2	7510N		A	1	4		25m	75	0.0	1.0m		.80	2.0	15	15	600n	172m	6	F	♦	CH42
3	CAG42		AD					100				.6	2.4	10	10	1.0u	90m	5	C	CA4	CN22
4	7511G		B	1	4		25m	100	0.0	1.0m		.80	2.0	15	15	1.0u	112m	6	F	♦	CH42
5	7511N		B	1	4		25m	75	0.0	1.0m		.80	2.0	15	15	600n	172m	6	F	♦	CH42
6	SW05FK/883		A	1	2	20	30m	100	10	1.0m	BFT	0.8	2.0	15	15	600n	900m	2	8	CA71	TO100
7	SW05FY/883		A	1	2	20	30m	100	10	1.0m	BFT	0.8	2.0	15	15	600n	900m	2	8	CA71b	DL14cf
8	SW05BQ		BØ	1	2	20	15m	75	10	1.0m	BFT	.80	2.0	15	15	400n	135m	5	C		
9	SW05FQ		BØ	1	2	20	15m	75	10	1.0m	BFT	.80	2.0	15	15	400n	135m	5	C		
10	AS5040C		A	1	1	44		130	10	1.0m	CMS			15	15	500n	450m	0	7	CA35b	DL16bi
11	AS5040M		A	1	1	44		150	10	1.0m	CMS	.80	2.4	15	15	500n	450m	5	C	CA35b	DL16x
12	AS5140C		A	1	1	44		100	10	-10m	CMS	.80	2.4	15	15	150n	450m	0	7	CA35b	DL16bi
13	AS5140M		A	1	1	44		75	10	-10m	CMS	.80	2.4	15	15	100n	450m	5	C	CA35b	DL16x
14	HI3-200-2		A	1	2	30		70	10	1.0m	CMS	.80	3.0	15	15	500n	15m	5	G	CA71	TO100
15	HI3-200-4		A	1	2	30		70	10	1.0m	CMS	.80	3.0	15	15	500n	15m	2	8	CA71	TO100
16	HI3-200-5		A	1	2	30		80	10	1.0m	CMS	.80	3.0	15	15	240n	15m	0	7	CA71	TO100
17	HI9-200-2		A	1	2	30		70	10	1.0m	CMS	.80	3.0	15	15	500n	15m	5	C	CA71b	TO86
18	HI9-200-4		A	1	2	30		70	10	1.0m	CMS	.80	3.0	15	15	500n	15m	2	8	CA71b	TO86
19	HI9-200-5		A	1	2	30		80	10	1.0m	CMS	.80	3.0	15	15	240n	15m	0	7	CA71b	TO86
20	AD7510JD		A	1	4	27	50m	100	10	1.0m	CMS	.80	3.0	15	15	1.2u	30u	0	7	CA79	DL16db
21	AD7510JN		A	1	4	27	50m	100	10	1.0m	CMS	.80	3.0	15	15	1.2u	30u	0	7	CA79	DL16bf
22	AD7510KD		A	1	4	27	50m	100	10	1.0m	CMS	.80	2.4	15	15	1.2u	30u	0	7	CA79	DL16db
23	AD7510KN		A	1	4	27	50m	100	10	1.0m	CMS	.80	2.4	15	15	1.2u	30u	0	7	CA79	DL16bf
24	AD7510SD		A	1	4	27	50m	100	10	1.0m	CMS	.80	2.4	15	15	1.2u	30u	5	C	CA79	DL16db
25	CD4016AK		A	1	4	15	15m	660	10	1.0m	CMS	.50	2.7	0.0	10	25n	500m	5	C	40-16B	Δ004AF
26	CD4016AY		A	1	4	15	15m	660	10	1.0m	CMS	.50	2.7	0.0	10	25n	500m	4	8	40-16B	Δ001AB
27	CD4016BK		A	1	4	20	20m	400	15	10k♦	CMS	0.0	2.0	0.0	15	30n	15u	5	C	CA27	Δ004AF
28	CD4066BK		A	1	4	15	20m	80	15	10k♦	CMS	0.0	6.75	0.0	15	15n	150n	5	C	CA27	Δ004AF
29	HEF4016P		A	1	4	15		660	10		CMS	3.0	7.0	0.0	10	16n	80u	4	8	CA27	DL14y
30	HEF4066P		A	1	4	15		500	10		CMS	3.0	7.0	0.0	10	4.0n	300u	4	8	CA27	DL14y
31	HI3-201-5		A	1	4	30		100	10	1.0m	CMS	.80	3.0	15	15	185n	15m	0	7	CA59	DL16dv
32	HI9-201-2		A	1	4	30		80	10	1.0m	CMS	.80	3.0	15	15	500n	15m	5	C	CA59	F16-3a
33	HI9-201-4		A	1	4	30		80	10	1.0m	CMS	.80	3.0	15	15	500n	15m	2	8	CA59	F16-3a
34	HI9-201-5		A	1	4	30		100	10	1.0m	CMS	.80	3.0	15	15	185n	15m	0	7	CA59	F16-3a
35	SCL4016BF		A	1	4	15		850	9.3	10k♦	CMS	.70	2.7	0.0	15	15n	300m	5	C	CA27	F16-12
36	SCL4066BF		A	1	4	15		280	15	10k♦	CMS	3.0	12	0.0	15	15n	300m	5	C	CA27	F16-12
37	SFF24016AEV		A	1	4	15		850	9.3		CMS	.50	2.7	0.0	15	20n	200m	4	8	CA27	TO116
38	SFF24016AKM		A	1	4	15		850	9.3		CMS	.50	2.7	0.0	15	20n	200m	5	C	CA27	TO116
39	TP4016UBN		A	1	4	18	20m				CMS	3.0	7.0	0.0	10		1.2m	4	8		DL14ba
40	AS5041C		A	2	1	44		130	10	1.0m	CMS			15	15	500n	450m	0	7	CA35d	DL16bi
41	AS5041M		A	2	1	44		150	10	1.0m	CMS	.80	2.4	15	15	500n	450m	5	C	CA35d	DL16x
42	AS5048C		A	2	1	44		45	10	1.0m	CMS			15	15	300n	450m	0	7	CA35d	DL16bi
43	AS5048M		A	2	1	44		60	10	1.0m	CMS	.80	2.4	15	15	250n	450m	5	C	CA35d	DL16x
44	AS5141C		A	2	1	44		100	10	-10m	CMS	.80	2.4	15	15	175n	450m	0	7	CA35d	DL16bi
45	AS5141M		A	2	1	44		75	10	-10m	CMS	.80	2.4	15	15	150n	450m	5	C	CA35d	DL16x
46	SCL4416BF		A	2	4	15		850	9.3	10k♦	CMS	.70	2.7	0.0	15	15n	300m	5	C	CA27	F16-12
47	DG201AL		AØ	1	4	30	20m	175	10	1.0m	CMS	.80	2.4	15	15	1.0u	750m	5	C	CA59	FP17
48	DG201AP		AØ	1	4	30	20m	175	10	1.0m	CMS	.80	2.4	15	15	1.0u	900m	5	C	CA59	DL16dc
49	DG201BL		AØ	1	4	30	20m	200	10	1.0m	CMS	.80	2.4	15	15	580n	750m	2	8	CA59	FP17
50	DG201BP		AØ	1	4	30	20m	200	10	1.0m	CMS	.80	2.4	15	15	580n	900m	2	8	CA59	DL16dc
51	DG201CJ		AØ	1	4	30	20m	200	10	1.0m	CMS	.80	2.4	15	15	580n	470m	0	7	CA59	DL16ca
52	CD22100K		A*	4	4	12	10m	85	12	10k♦	CMS			0.0	12	200n	240n	5	C	CA160	Δ004AG
53	MC142100AL		A*	4	4	15	10m	100	10	10k♦	CMS	4.0	11	0.0	15		225u	5	C	CA160	DL16ab
54	MC142100CL		A*	4	4	15	10m	100	10	10k♦	CMS	4.0	11	0.0	15		225u	4	8	CA160	DL16ab
55	MC142100CP		A*	4	4	15	10m	100	10	10k♦	CMS	4.0	11	0.0	15		225u	4	8	CA160	DL16ai
56	MC145100AL		A*	4	4	15	10m	100	10	10k♦	CMS	4.0	11	0.0	15		225u	5	C	CA160	DL16ab
57	MC145100CL		A*	4	4	15	10m	100	10	10k♦	CMS	4.0	11	0.0	15		225u	4	8	CA160	DL16ab
58	MC145100CP		A*	4	4	15	10m	100	10	10k♦	CMS	4.0	11	0.0	15		225u	4	8	CA160	DL16ai
59	MT8804AD		A*	4	8	13	16m	108	13		CMS	1.5	3.5	0.0	13	400n	1.2	5	C	CA167	DL24bc
60	MT8804AI		A*	4	8	13		108	13		CMS	1.5	3.5	0.0	13	200n		5	C	CA167	CH24Ø
61	MT8804BC		A*	4	8	18		90	10		CMS			0.0	10	400n	1.0u	4	8	CA167	DLØ
62	MT8804BE		A*	4	8	18		90	10		CMS			0.0	10	400n	1.0u	4	8	CA167	DLØ
63	MT8804BF		A*	4	8	18		90	10		CMS			0.0	10	400n	1.0u	5	C	CA167	DLØ
64	MT8804BH		A*	4	8	18		90	10		CMS			0.0	10	400n	1.0u	4	8	CA167	DLØ
65	MT8804BI		A*	4	8	18		90	10		CMS			0.0	10	400n	1.0u	5	C	CA167	CHØ
66	DG301AL		ABØ	2	1	32	30m	50	10	10m	CMS	.80	4.0	15	15	300n	750m	5	C	CA102	F14-14
67	DG301BL		ABØ	2	1	32	30m	50	10	10m	CMS	.80	4.0	15	15	300n	750m	2	8	CA102	F14-14
68	DG305AL		ABØ	2	1	32	30m	50	10	10m	CMS	3.5	11	15	15	250n	750m	5	C	CA102	F14-14
69	DG305BL		ABØ	2	1	32	30m	50	10	10m	CMS	3.5	11	15	15	250n	750m	2	8	CA102	F14-14
70	DG303AL		ABØ	2	2	32	30m	50	10	10m	CMS	.80	4.0	15	15	300n	750m	5	C	CA104	F14-14
71	DG303BL		ABØ	2	2	32	30m	50	10	10m	CMS	.80	4.0	15	15	300n	750m	2	8	CA104	F14-14
72	DG307AL		ABØ	2	2	32	30m	50	10	10m	CMS	3.5	11	15	15	250n	750m	5	C	CA104	F14-14
73	DG307BL		ABØ	2	2	32	30m	50	10	10m	CMS	3.5	11	15	15	250n	750m	2	8	CA104	F14-14
74	HI1-5043-2		AB	2	2	30	80m	50	10	1.0m	CMS	.80	3.0	15	15	1.0u	1.5m	5	C	CA35j	DL16bz
75	HI1-5043-5		AB	2	2	30	80m	50	10	1.0m	CMS	.80	3.0	15	15	370n	1.5m	0	7	CA35j	DL16bz
76	HI9-5051-2		AB	2	2	30	80m	25	10	1.0m	CMS	.80	3.0	15	15	1.0u	1.5m	5	C	CA35i	TO86
77	HI9-5051-5		AB	2	2	30	80m	25	10	1.0m	CMS	.80	3.0	15	15	370n	1.5m	0	7	CA35i	TO86
78	HI1-5046-2		AB	4	1	30	80m	50	10	1.0m	CMS	.80	3.0	15	15	1.0u	1.5m	5	C	CA35q	DL16bz
79	HI1-5046-5		AB	4	1	30	80m	50	10	1.0m	CMS	.80	3.0	15	15	370n	1.5m	0	7	CA35q	DL16bz
80	HI1-5046A-2		AB	4	1	30	80m	25	10	1.0m	CMS	.80	3.0	15	15	1.0u	1.5m	5	C	CA35q	DL16bz
81	HI1-5046A-5		AB	4	1	30	80m	25	10	1.0m	CMS	.80	3.0	15	15	370n	1.5m	0	7	CA35q	DL16bz
82	HI9-5046-2		AB	4	1	30	80m	50	10	1.0m	CMS	.80	3.0	15	15	1.0u	1.5m	5	C	CA35p	TO86
83	HI9-5046-5		AB	4	1	30	80m	50	10	1.0m	CMS	.80	3.0	15	15	370n	1.5m	0	7	CA35p	TO86
84	HI9-5046A-2		AB	4	1	30	80m	25	10	1.0m	CMS	.80	3.0	15	15	1.0u	1.5m	5	C	CA35p	TO86
85	HI9-5046A-5		AB	4	1	30	80m	25	10	1.0m	CMS	.80	3.0	15	15	370n	1.5m	0	7	CA35p	TO86
86	HI9-5040-2		B	1	1	30	80m	50	10	1.0m	CMS	.80	3.0	15	15	1.0u	1.5m	5	C	CA35	TO86
87	HI9-5040-5		B	1	1	30	80m	50	10	1.0m	CMS	.80	3.0	15	15	370n	1.5m	0	7	CA35	TO86
88	HI1-5041-2		B	1	2	30	80m	50	10	1.0m	CMS	.80	3.0	15	15	1.0u	1.5m	5	C	CA35d	DL16bz
89	HI1-5041-5		B	1	2	30	80m	50	10	1.0m	CMS	.80	3.0	15	15	370n	1.5m	0	7	CA35d	DL16bz
90	HI9-5041-2		B	1	2	30	80m	50	10	1.0m	CMS	.80	3.0	15	15	1.0u	1.5m	5	C	CA35c	TO86
91	HI9-5041-5		B	1	2	30	80m	50	10	1.0m	CMS	.80	3.0	15	15	370n	1.5m	0	7	CA35c	TO86
92	HI9-5048-2		B	1	2	30	80m	25	10	1.0m	CMS	.80	3.0	15	15	1.0u	1.5m	5	C	CA35c	TO86
93	HI9-5048-5		B	1	2	30	80m	25	10	1.0m	CMS	.80	3.0	15	15	370n	1.5m	0	7	CA35c	TO86
94	AD7511JD		B	1	4	57	50m	100	10	1.0m	CMS	.80	3.0	15	15	1.2u	30u	0	7	CA79	DL16db
95	AD7511JN		B	1	4	57	50m	100	10	1.0m	CMS	.80	3.0	15	15	1.2u	30u	0	7	CA79	DL16bf
96	AD7511KD		B	1	4	57	50m	100	10	1.0m	CMS	.80	2.4	15	15	1.2u	30u	0	7	CA79	DL16db
97	AD7511KN		B	1	4	57	50m	100	10	1.0m	CMS	.80	2.4	15	15	1.2u	30u	0	7	CA79	DL16bf
98	AD7511SD		B	1	4	57	50m	100	10	1.0m	CMS	.80	3.0	15	15	1.2u	30u	5	C	CA79	DL16db
99	AD7511TD		B	1	4	25	50m	100	10	1.0m	CMS	.80	2.4	15	15	1.2u	30u	5	C	CA79	DL16db
100	HI1-5044-2		B	2	1	30	80m	50	10	1.0m	CMS	.80	3.0	15	15	1.0u	1.5m	5	C	CA35l	DL16bz
101	HI1-5044-5		B	2	1	30	80m	50	10	1.0m	CMS	.80	3.0	15	15	370n	1.5m	0	7	CA35l	DL16bz
102	HI9-5044-2		B	2	1	30	80m	50	10	1.0m	CMS	.80	3.0	15	15	1.0u	1.5m	5	C	CA35k	TO86
103	HI9-5044-5		B	2	1	30	80m	50	10	1.0m	CMS	.80	3.0	15	15	370n	1.5m	0	7	CA35k	TO86
104	HI1-5045-2		B	2	2	30	80m	50	10	1.0m	CMS	.80	3.0	15	15	1.0u	1.5m	5	C	CA35o	DL16bz
105	HI1-5045-5		B	2	2	30	80m	50	10	1.0m	CMS	.80	3.0	15	15	370n	1.5m	0	7	CA35o	DL16bz
106	HI9-5045-2		B	2	2	30	80m	50	10	1.0m	CMS	.80	3.0	15	15	1.0u	1.5m	5	C	CA35n	TO86
107	HI9-5045-5		B	2	2	30	80m	50	10	1.0m	CMS	.80	3.0	15	15	370n	1.5m	0	7	CA35n	TO86
108	HI9-5049-2		B	2	2	30	80m	25	10	1.0m	CMS	.80	3.0	15	15	1.0u	1.5m	5	C	CA35n	TO86
109	HI9-5049-5		B	2	2	30	80m	25	10	1.0m	CMS	.80	3.0	15	15	370n	1.5m	0	7	CA35n	TO86
110	HI9-5047-2		B	4	1	30	80m	50	10	1.0m	CMS	.80	3.0	15	15	1.0u	1.5m	5	C	CA35r	TO86

SYMBOLS AND CODES EXPLAINED IN INTERPRETER

11. ANALOG GATE SWITCHES BILATERAL,MULTIPLE

IN ORDER OF: (1)TECHN (2)SW FORM (3)SWS/CKT (4)DEV CKTS & (5)TYPE NUMBER

LINE No.	5 TYPE NUMBER	DATA SHT.	2 SF WO R M	3 SWS PER CKT	4 DC EK VT S	MAXIMUM SW VOLT P-P (V)	SW CURR P-P (A)	MAXIMUM DRAIN/ SOURCE ON RESISTANCE RDS (Ω)	° VD (V)	° IS (A)	1 T E C H N	CONTROL LOGIC LEVELS MAX '0' (V)	MIN '1' (V)	RATED PWR SUP SPAN NEG (V)	POS (V)	MAX ON TIME tON (S)	MAX OPER POWER DISS (W)	OPER TEMP RANGE CODE -	+	DRAWINGS LOGIC OR BLOCK	OUTLINE Δ=MO
1	HI9-5047-5		B	4	1	30	80m	50	10	1.0m	CMS	.80	3.0	15	15	370n	1.5m	0	7	CA35r	TO86
2	HI9-5047A-2		B	4	1	30	80m	25	10	1.0m	CMS	.80	3.0	15	15	1.0u	1.5m	5	C	CA35r	TO86
3	HI9-5047A-5		B	4	1	30	80m	25	10	1.0m	CMS	.80	3.0	15	15	370n	1.5m	0	7	CA35r	TO86
4	DG300AL		BØ	1	2	32	30m	50	10	10m	CMS	.80	4.0	15	15	300n	750m	5	C	CA100	F14-14
5	DG300BL		BØ	1	2	32	30m	50	10	10m	CMS	.80	4.0	15	15	300n	750m	2	8	CA100	F14-14
6	DG304AL		BØ	1	2	32	30m	50	10	10m	CMS	3.5	11	15	15	250n	750m	5	C	CA100	F14-14
7	DG304BL		BØ	1	2	32	30m	50	10	10m	CMS	3.5	11	15	15	250n	750m	2	8	CA100	F14-14
8	DG302AL		BØ	2	2	32	30m	50	10	10m	CMS	.80	4.0	15	15	300n	750m	5	C	CA103	F14-14
9	DG302BL		BØ	2	2	32	30m	50	10	10m	CMS	.80	4.0	15	15	300n	750m	2	8	CA103	F14-14
10	DG306AL		BØ	2	2	32	30m	50	10	10m	CMS	3.5	11	15	15	250n	750m	5	C	CA103	F14-14
11	DG306BL		BØ	2	2	32	30m	50	10	10m	CMS	3.5	11	15	15	250n	750m	2	8	CA103	F14-14
12	AS5042C		C	1	1	44		130	10	1.0m	CMS			15	15	500n	450m	0	7	CA35g	DL16bi
13	AS5042M		C	1	1	44		150	10	1.0m	CMS	.80	2.4	15	15	500n	450m	5	C	CA35g	DL16x
14	AS5050C		C	1	1	44		45	10	1.0m	CMS	.80	2.4	15	15	300n	450m	0	7	CA35g	DL16bi
15	AS5050M		C	1	1	44		60	10	1.0m	CMS	.80	2.4	15	15	250n	450m	5	C	CA35g	DL16x
16	AS5142C		C	1	1	44		100	10	-10m	CMS	.80	2.4	15	15	300n	450m	0	7	CA35g	DL16bi
17	AS5142M		C	1	1	44		75	10	-10m	CMS	.80	2.4	15	15	200n	450m	5	C	CA35g	DL16x
18	AD7512JD		C	1	2	57	50m	100	10	1.0m	CMS	.80	3.0	15	15	1.2u	30u	0	7	CA80	DL14ab
19	AD7512JN		C	1	2	57	50m	100	10	1.0m	CMS	.80	3.0	15	15	1.2u	30u	0	7	CA80	DL14b
20	AD7512KD		C	1	2	57	50m	100	10	1.0m	CMS	.80	2.4	15	15	1.2u	30u	0	7	CA80	DL14ab
21	AD7512KN		C	1	2	57	50m	100	10	1.0m	CMS	.80	2.4	15	15	1.2u	30u	0	7	CA80	DL14b
22	AD7512SD		C	1	2	57	50m	100	10	1.0m	CMS	.80	3.0	15	15	1.2u	30u	5	C	CA80	DL14ab
23	AD7512TD		C	1	2	57	50m	100	10	1.0m	CMS	.80	2.4	15	15	1.2u	30u	5	C	CA80	DL14ab
24	AS5043C		C	2	1	44		130	10	1.0m	CMS			15	15	500n	450m	0	7	CA35j	DL16bi
25	AS5043M		C	2	1	44		150	10	1.0m	CMS	.80	2.4	15	15	500n	450m	5	C	CA35j	DL16x
26	AS5051C		C	2	1	44		45	10	1.0m	CMS	.80	2.4	15	15	300n	450m	0	7	CA35j	DL16bi
27	AS5051M		C	2	1	44		60	10	1.0m	CMS	.80	2.4	15	15	250n	450m	5	C	CA35j	DL16x
28	AS5143C		C	2	1	44		100	10	-10m	CMS	.80	2.4	15	15	250n	450m	0	7	CA35j	DL16bi
29	AS5143M		C	2	1	44		75	10	-10m	CMS	.80	2.4	15	15	175n	450m	5	C	CA35j	DL16x
30	HI1-5042-2		C	2	1	30	80m	50	10	1.0m	CMS	.80	3.0	15	15	1.0u	1.5m	5	C	CA35g	DL16bz
31	HI1-5042-5		C	2	1	30	80m	50	10	1.0m	CMS	.80	3.0	15	15	370n	1.5m	0	7	CA35g	DL16bz
32	HI9-5042-2		C	2	1	30	80m	50	10	1.0m	CMS	.80	3.0	15	15	1.0u	1.5m	5	C	CA35f	TO86
33	HI9-5042-5		C	2	1	30	80m	50	10	1.0m	CMS	.80	3.0	15	15	370n	1.5m	0	7	CA35f	TO86
34	HI9-5050-2		C	2	1	30	80m	25	10	1.0m	CMS	.80	3.0	15	15	1.0u	1.5m	5	C	CA35f	TO86
35	HI9-5050-5		C	2	1	30	80m	25	10	1.0m	CMS	.80	3.0	15	15	370n	1.5m	0	7	CA35f	TO86
36	HI9-5043-2		C	2	2	30	80m	50	10	1.0m	CMS	.80	3.0	15	15	1.0u	1.5m	5	C	CA35i	TO86
37	HI9-5043-5		C	2	2	30	80m	50	10	1.0m	CMS	.80	3.0	15	15	370n	1.5m	0	7	CA35i	TO86
38	AS5044C		D	1	1	44		130	10	1.0m	CMS			15	15	500n	450m	0	7	CA35l	DL16bi
39	AS5044M		D	1	1	44		150	10	1.0m	CMS	.80	2.4	15	15	500n	450m	5	C	CA35l	DL16x
40	AS5144C		D	1	1	44		100	10	-10m	CMS	.80	2.4	15	15	250n	450m	0	7	CA35l	DL16bi
41	AS5144M		D	1	1	44		75	10	-10m	CMS	.80	2.4	15	15	175n	450m	5	C	CA35l	DL16x
42	AS5045C		D	2	1	44		130	10	1.0m	CMS			15	15	500n	450m	0	7	CA35j	DL16bi
43	AS5045M		D	2	1	44		150	10	1.0m	CMS	.80	2.4	15	15	500n	450m	5	C	CA35j	DL16x
44	AS5049C		D	2	1	44		45	10	1.0m	CMS			15	15	300n	450m	0	7	CA35o	DL16bi
45	AS5049M		D	2	1	44		60	10	1.0m	CMS	.80	2.4	15	15	250n	450m	5	C	CA35o	DL16x
46	AS5145C		D	2	1	44		100	10	-10m	CMS	.80	2.4	15	15	300n	450m	0	7	CA35o	DL16bi
47	AS5145M		D	2	1	44		75	10	-10m	CMS	.80	2.4	15	15	200m	450m	5	C	CA35o	DL16x
48	AS5046C		E	1	1	44		130	10	1.0m	CMS			15	15	500n	450m	0	7	CA35q	DL16bi
49	AS5046M		E	1	1	44		150	10	1.0m	CMS	.80	2.4	15	15	500n	450m	5	C	CA35q	DL16x
50	AS5047C		F	1	1	44		130	10	1.0m	CMS			15	15	500n	450m	0	7	CA35q	DL16bi
51	AS5047M		F	1	1	44		150	10	1.0m	CMS	.80	2.4	15	15	500n	450m	5	C	CA35q	DL16x
52	LF12202D		A	1	4	20	20m	250	0.0	1.0m	MOS	.80	2.0	15	15	500n	900m	2	8	CA135d	DL16ch
53	LF12202N		A	1	4	20	20m	250	0.0	1.0m	MOS	.80	2.0	15	15	500n	500m	2	8	CA135d	DL24t
54	LF12331D		A	1	4	20	20m	250	0.0	1.0m	MOS	.80	2.0	15	15	500n	900m	2	8	CA135	DL16ch
55	LF12331N		A	1	4	20	20m	250	0.0	1.0m	MOS	.80	2.0	15	15	500n	500m	2	8	CA135	DL24t
56	MB84016		A	1	4						MOS			0.0	10		5.0u	5	C	CA27	DL14as
57	MB84016M		A	1	4						MOS			0.0	10		5.0u	4	8	CA27	DL14ar
58	MX01C		A	8	1	30	10u	500		10m	MOS	0.0	-6.0	30	0.0			5	C	CA83	FPØ
59	MX54C		A§	4	1	30		50	27	1.0m	MOS	2.5	9.0	30	0.0	400n	200m	2	7	CA88	FP36
60	MX55C		A§	4	1	16		75	15	1.0m	MOS	1.0	4.8	16	0.0	300n	90m	2	7	CA88	FP36
61	DG116AL		AØØ	4	1	20	30m	450	-10	1.0m	MOS	.40	1.0	20	10	300n	750m	5	C	CA90	F14-4a
62	DG116AP		AØØ	4	1	20	30m	450	-10	1.0m	MOS	.40	1.0	20	10	300n	825m	5	C	CA90	DL14aa
63	DG116BL		AØØ	4	1	20	30m	500	-10	1.0m	MOS	.40	1.0	20	10	300n	750m	2	8	CA90	F14-4a
64	DG116BP		AØØ	4	1	20	30m	500	-10	1.0m	MOS	.40	1.0	20	10	300n	825m	2	8	CA90	DL14aa
65	MX02D		AØ	6	1	30	10u	500		10m	MOS	0.0	-6.0	30	0.0			5	C	CA84	DLØ
66	MX52D		AØ	6	1	30	10u	500			MOS	0.0	-6.0	30	0.0			2	7	CA87	FP35
67	MX03C		AØ	10	1	30	10u	500		10m	MOS	0.0	-6.0	30	0.0			5	C	CA85	FPØ
68	MX53C		AØ	10	1	30	10u	500			MOS	0.0	-6.0	30	0.0			2	7	CA86	FP34
69	LF12333D		AB	1	4	20	20m	250	0.0	1.0m	MOS	.80	2.0	15	15	500n	900m	2	8	CA135b	DL16ch
70	LF12333N		AB	1	4	20	20m	250	0.0	1.0m	MOS	.80	2.0	15	15	500n	500m	2	8	CA135b	DL24t
71	TL182ML		B	1	2	20		75	-10	1.0m	MOS	.80	2.0	15	15	175n	120m	5	C	CA34	CN4
72	AH0015CN		B	1	4	20		600	-10	1.0m	MOS	.80	2.0	22	10	150n	35m	2	8	CA117	DL16bv
73	LF12201D		B	1	4	20	20m	250	0.0	1.0m	MOS	.80	2.0	15	15	500n	900m	2	8	CA135c	DL16ch
74	LF12201N		B	1	4	20	20m	250	0.0	1.0m	MOS	.80	2.0	15	15	500n	500m	2	8	CA135c	DL24t
75	LF12332D		B	1	4	20	20m	250	0.0	1.0m	MOS	.80	2.0	15	15	500n	900m	2	8	CA135a	DL16ch
76	LF12332N		B	1	4	20	20m	250	0.0	1.0m	MOS	.80	2.0	15	15	500n	500m	2	8	CA135a	DL24t
77	AH0019CN		B	2	2	20		600	-10	1.0m	MOS	.80	2.0	22	10	150n	17m	2	8	CA118	DL14o
78	VMUX		BØØ	6	1	10		60		400u	MOS			15	15	50n	2.6	5	8	CA156	F31-1
79	AH0014CN		C	2	1	20		600	-10	1.0m	MOS	.80	2.0	22	10	425n	16m	2	8	CA116	DL14o
80	SD5101N		A	4		10		70	5.0	1.0m	NMS			15	15	600p	640m	0	8	CA183	
81	DG133BL		AØ	1	2	20	30m	50	10	10m	NMS	.80	2.5	18	12	1.0u	750m	2	8	CA92	F14-4a
82	DG134BL		AØ	1	2	20	30m	100	8.0	10m	NMS	.80	2.5	18	12	1.0u	750m	2	8	CA92	F14-4a
83	DG141BL		AØ	1	2	20	30m	15	8.0	10m	NMS	.80	2.5	18	12	1.5u	750m	2	8	CA92	F14-4a
84	DG151BL		AØ	1	2	15	30m	20	5.5	10m	NMS	.80	2.5	15	15	1.5u	750m	2	8	CA92	F14-4a
85	DG152BL		AØ	1	2	15	30m	100	5.5	10m	NMS	.80	2.5	15	15	1.0u	750m	2	8	CA92	F14-4a
86	DG180BLΔ		AØ	1	2	20	200m	15	7.5	10m	NMS	.80	2.0	15	15	350n	750m	2	8	CA34a	F14-4a
87	DG181BLΔ		AØ	1	2	20	30m	50	7.5	10m	NMS	.80	2.0	15	15	180n	750m	2	8	CA34a	F14-4a
88	DG182BLΔ		AØ	1	2	20	30m	100	10	10m	NMS	.80	2.0	15	15	300n	750m	2	8	CA34a	F14-4a
89	DG126BL		AØ	2	2	20	30m	100	8.0	10m	NMS	.80	2.5	18	12	1.0u	750m	2	8	CA91	F14-4a
90	DG140BL		AØ	2	2	20	30m	15	8.0	10m	NMS	.80	2.5	18	12	1.5u	750m	2	8	CA91	F14-4a
91	DG153BL		AØ	2	2	15	30m	20	5.5	10m	NMS	.80	2.5	15	15	1.5u	750m	2	8	CA91	F14-4a
92	DG154BL		AØ	2	2	15	30m	100	5.5	10m	NMS	.80	2.5	15	15	1.0u	750m	2	8	CA91	F14-4a
93	DG183BLΔ		AØ	2	2	20	30m	15	7.5	10m	NMS	.80	2.0	15	15	350n	750m	2	8	CA34c	F14-4a
94	DG184BLΔ		AØ	2	2	20	30m	50	7.5	10m	NMS	.80	2.0	15	15	180n	750m	2	8	CA34c	F14-4a
95	DG185BLΔ		AØ	2	2	20	30m	100	10	10m	NMS	.80	2.0	15	15	300n	750m	2	8	CA34c	F14-4a
96	MEM781D		AØ	1	4	20	80m	30	6.0	1.0m	NMS	-6.0	6.0	20	20		600m	6	C	CA175	DL14h
97	MEM781F		AØ	1	4	20	80m	30	6.0	1.0m	NMS	-6.0	6.0	20	20		600m	6	C	CA175	F14-10a
98	MEM781P		AØ	1	4	20	80m	30	6.0	1.0m	NMS	-6.0	6.0	20	20		600m	6	8	CA175	DL14bb
99	DG129BL		AØØ	2	2	20	30m	50	10	10m	NMS	.80	2.5	18	12	1.0u	750m	2	8	CA91	F14-4a
100	DM780D		AØ	2	2	20	50m	30	6.0	1.0m	NMS	.60	6.0	6.0	0.0		600m	6	C	CA72	DL14d
101	DM780F		AØ	2	2	20	50m	30	6.0	1.0m	NMS	.60	6.0	6.0	0.0		600m	6	C	CA72	F14-10a
102	DM780P		AØ	2	2	20	50m	30	6.0	1.0m	NMS	.60	6.0	6.0	0.0		600m	6	C	CA72	DL14bb
103	MEM780D		AØ	2	2	20	80m	30	6.0	1.0m	NMS	-6.0	6.0	20	20		600m	6	C	CA72	DL14h
104	MEM780F		AØ	2	2	20	80m	30	6.0	1.0m	NMS	-6.0	6.0	20	20		600m	6	C	CA72	F14-10a
105	MEM780P		AØ	2	2	20	80m	30	6.0	1.0m	NMS	-6.0	6.0	20	20		600m	6	8	CA72	DL14bb
106	DG187BLΔ		AAØ	2	1	20	30m	50	7.5	10m	NMS	.80	2.0	15	15	180n	750m	2	8	CA34f	F14-4a
107	DG143BL		ABØ	2	1	20	30m	100	8.0	10m	NMS	2.0	3.0	18	12	1.0u	750m	2	8	CA94	F14-4a
108	DG144BL		ABØ	2	1	20	30m	50	8.0	10m	NMS	2.0	3.0	18	12	1.0u	750m	2	8	CA94	F14-4a
109	DG146BL		ABØ	2	1	20	30m	15	8.0	10m	NMS	2.0	3.0	18	12	1.5u	750m	2	8	CA94	F14-4a
110	DG161BL		ABØ	2	1	15	30m	20	5.5	10m	NMS	2.0	3.0	15	15	1.5u	750m	2	8	CA94	F14-4a

SYMBOLS AND CODES EXPLAINED IN INTERPRETER

11. ANALOG GATE SWITCHES BILATERAL,MULTIPLE

IN ORDER OF: (1)TECHN (2)SW FORM (3)SWS/CKT (4)DEV CKTS & (5)TYPE NUMBER

LINE No.	5 TYPE NUMBER	DATA SHT.	2 SF WO R M	3 SWS PER CKT	4 DC EK VT S	MAXIMUM SW VOLT P-P (V)	MAXIMUM SW CURR P-P (A)	MAXIMUM DRAIN/ SOURCE ON RESISTANCE RDS (Ω)	° VD (V)	° IS (A)	1 T E C H N	CONTROL LOGIC LEVELS MAX '0' (V)	MIN '1' (V)	RATED PWR SUP SPAN NEG (V)	POS (V)	MAX ON TIME tON (S)	MAX OPER POWER DISS (W)	OPER TEMP RANGE CODE -	+	DRAWINGS LOGIC OR BLOCK	OUTLINE Δ=MO
1	DG162BL		AB∅	2	1	15	30m	100	5.5	10m	NMS	2.0	3.0	15	15	1.0u	750m	2	8	CA94	F14-4a
2	DG186BL△		AB∅	2	1	20	200m	15	7.5	10m	NMS	.80	2.0	15	15	350n	750m	2	8	CA34f	F14-4a
3	DG188BL△		AB∅	2	1	20	30m	100	10	10m	NMS	.80	2.0	15	15	300n	750m	2	8	CA34f	F14-4a
4	DG189BL△		AB∅	2	2	20	30m	15	7.5	10m	NMS	.80	2.0	15	15	350n	750m	2	8	CA34h	F14-4a
5	DG190BL△		AB∅	2	2	20	30m	50	7.5	10m	NMS	.80	2.0	15	15	180n	750m	2	8	CA34h	F14-4a
6	DG191BL△		AB∅	2	2	20	30m	100	10	10m	NMS	.80	2.0	15	15	300n	750m	2	8	CA34h	F14-4a
7	DG139BL		AB∅	4	1	20	30m	50	8.0	10m	NMS	2.0	3.0	18	12	1.0u	750m	2	8	CA93	F14-4a
8	DG142BL		AB∅	4	1	20	30m	100	8.0	10m	NMS	2.0	3.0	18	12	1.0u	750m	2	8	CA93	F14-4a
9	DG145BL		AB∅	4	1	20	30m	15	8.0	10m	NMS	2.0	3.0	18	12	1.5u	750m	2	8	CA93	F14-4a
10	DG163BL		AB∅	4	1	15	30m	20	5.5	10m	NMS	2.0	3.0	15	15	1.5u	750m	2	8	CA93	F14-4a
11	DG164BL		AB∅	4	1	15	30m	100	5.5	10m	NMS	2.0	3.0	15	15	1.0u	750m	2	8	CA93	F14-4a
12	G125AF		B	1	4	30		500	10		NMS			0.0	10		375m	5	C	CA109	F14-4d
13	G126AF		B	1	4	30		250	10		NMS			0.0	10		375m	5	C	CA109	F14-4d
14	G127AF		B	1	4	30		90	10		NMS			0.0	10		375m	5	C	CA109	F14-4d
15	G128AF		B	1	4	30		45	10		NMS			0.0	10		375m	5	C	CA109	F14-4d
16	G128AP		B	1	4	30		45	10		NMS			0.0	10		825m	5	C	CA109	DL14aa
17	G128BF		B	1	4	30		50	10		NMS			0.0	10		375m	2	8	CA109	F14-4d
18	G128BP		B	1	4	30		50	10		NMS			0.0	10		825m	2	8	CA109	DL14aa
19	G129AF		B	1	4	30		500	10		NMS			0.0	10		375m	5	C	CA110	F14-4d
20	G130AF		B	1	4	30		250	10		NMS			0.0	10		375m	5	C	CA110	F14-4d
21	G131AF		B	1	4	30		90	10		NMS			0.0	10		375m	5	C	CA110	F14-4d
22	G132AF		B	1	4	30		45	10		NMS			0.0	10		375m	5	C	CA110	F14-4d
23	DG515BDICE		C§∅	4	1		10m	50	8.0	1.0m	NMS	0.0	8.0	0.0	8.0	120n		2	8	CA105	CH9
24	DG515CDICE		C§∅	4	1		10m	62	8.0	1.0m	NMS	0.0	8.0	0.0	8.0	180n		0	7	CA105	CH9
25	DG516BDICE		C§∅	10	1		10m	3.2k	8.0	100u	NMS	0.0	8.0	0.0	8.0	120n		2	8	CA106	CH10
26	DG516CDICE		C§∅	10	1		10m	4.2k	8.0	100u	NMS	0.0	8.0	0.0	8.0	180n		0	7	CA106	CH10
27	DGM111AL		A	1	2	20	30m	200	10	1.0m	PMS	.50	4.1	20	10	300n	750m	5	C	CA61	F14-4a
28	DGM111AP		A	1	2	20	30m	200	10	1.0m	PMS	.50	4.1	20	10	300n	825m	5	C	CA61a	DL14aa
29	DGM111BL		A	1	2	20	30m	250	10	1.0m	PMS	.50	4.1	20	10	300n	750m	2	8	CA61	F14-4a
30	DGM111BP		A	1	2	20	30m	250	10	1.0m	PMS	.50	4.1	20	10	300n	825m	2	8	CA61a	DL14aa
31	SFF154		A	1	2	20		800	-10	1.0m	PMS		5.0	20	10		200m	0	7	CA32	TO99
32	SFF154M		A	1	2	20		800	-10	1.0m	PMS		5.0	20	10		200m	5	C	CA32	TO99
33	SFF155		A	1	3	20		800	-10	1.0m	PMS		5.0	20	10		200m	0	7	CA33	TO100
34	SFF155M		A	1	3	20		800	-10	1.0m	PMS		5.0	20	10		200m	5	C	CA33	TO100
35	DGM122AL		A	2	2	20	30m	450	10	1.0m	PMS	.40	1.3	20	10	300n	750m	5	C	CA62	F14-4a
36	DGM122AP		A	2	2	20	30m	450	10	1.0m	PMS	.40	1.3	20	10	300n	825m	5	C	CA62	DL14aa
37	DGM122BL		A	2	2	20	30m	500	10	1.0m	PMS	.40	1.3	20	10	500n	750m	2	8	CA62	F14-4a
38	DGM122BP		A	2	2	20	30m	500	10	1.0m	PMS	.40	1.3	20	10	500n	825m	2	8	CA62	DL14aa
39	SFF1115KM		A	6	1	20	100m	450	-20	1.0m	PMS	-1.0	-5.0	30	.30		750m	5	C	CA48	D16-13a
40	UC6410D		A	6	1	40	50m	250	20	100u	PMS	-20	0.0	20	0.0	15n	900m	5	C	CA114	DL14y
41	UC6410F		A	6	1	40	50m	250	20	100u	PMS	-20	0.0	20	0.0	15n	900m	5	C	CA114	F14-2c
42	UC7410D		A	6	1	40	50m	250	20	100u	PMS	-20	0.0	20	0.0	15n	900m	0	7	CA114	DL14y
43	UC7410F		A	6	1	40	50m	250	20	100u	PMS	-20	0.0	20	0.0	15n	900m	0	7	CA114	F14-2c
44	DG171AA		A∅	1	1	20	20m	100	10	10m	PMS	.80	2.0	20	10	200n	450m	5	C	CA66	CN4a
45	DG171BA		A∅	1	1	20	20m	125	10	10m	PMS	.80	2.0	20	10	200n	450m	2	8	CA66	CN4a
46	SI455AA		AØ	1	3	20		600	20	1.0m	PMS			20	0.0		450m	5	C	CA112	CN4a
47	SI555BA		AØ	1	3	20		600		1.0m	PMS			20	0.0		450m	2	8	CA112	CN4a
48	MEM851D		AØ	1	4	30	5.0m	100	20	100u	PMS	-20	0.0			25n	600m	6	C	CA73	DL14h
49	MEM851F		AØ	1	4	30	5.0m	100	20	100u	PMS	-20	0.0			25n	600m	6	C	CA73	F14-10a
50	MEM851P		AØ	1	4	30	5.0m	100	20	100u	PMS	-20	0.0			25n	600m	6	8	CA73	DL14bb
51	SFF151		AØ	1	4	20		800	-10	1.0m	PMS		5.0	20	10		200m	0	7	CA31	TO100
52	SFF151M		AØ	1	4	20		800	-10	1.0m	PMS		5.0	20	10		200m	5	C	CA31	TO100
53	SI452AL		AØ	1	4	20		600	20	1.0m	PMS			20	0.0		750m	5	C	CA73	F14-4a
54	SI552BL		AØ	1	4	20		600		1.0m	PMS			20	0.0		750m	2	8	CA73	F14-4a
55	G122BL		AØ	2	2	30	100m	500	20	1.0m	PMS	-20	0.0	20	0.0		750m	2	8	CA107	F14-4a
56	SFF1122KM		AØ	2	2	20	100m	450	-20	1.0m	PMS	-1.0	-5.0	30	.30		750m	5	C	CA55	TO116
57	SFF1122KT		AØ	2	2	20	100m	500	-20	1.0m	PMS	-1.0	-5.0	30	.30		750m	2	8	CA55	TO116
58	SFF1122PM		AØ	2	2	20	100m	450	-20	1.0m	PMS	-1.0	-5.0	30	.30		750m	5	C	CA55	TO86
59	SFF1122PT		AØ	2	2	20	100m	500	-20	1.0m	PMS	-1.0	-5.0	30	.30		750m	2	8	CA55	TO86
60	SFF157E		AØ	2	3	20		4.0k	-10	1.0m	PMS	-2.8	-5.0	20	10		300m	0	7	CA54	D16-13a
61	SFF157K		AØ	2	3	20		4.0k	-10	1.0m	PMS	-2.8	-5.0	20	10		300m	0	7	CA54	D16-13a
62	SFF157KM		AØ	2	3	20		4.0k	-10	1.0m	PMS	-2.8	-5.0	20	10		300m	5	C	CA54	D16-13a
63	G119BL		AØ	3	2	30	100m	500	20	1.0m	PMS	-20	0.0	20	0.0		750m	2	8	CA47	F14-4a
64	SFF156E		AØ	3	2	20		4.0k	-10	1.0m	PMS	-2.8	-5.0	20	10		300m	0	7	CA53	D16-13a
65	SFF156K		AØ	3	2	20		4.0k	-10	1.0m	PMS	-2.8	-5.0	20	10		300m	0	7	CA53	D16-13a
66	SFF156KM		AØ	3	2	20		4.0k	-10	1.0m	PMS	-2.8	-5.0	20	10		300m	5	C	CA53	D16-13a
67	SFF1119KM		AØ	3	2	20	100m	450	-20	1.0m	PMS	-1.0	-5.0	30	.30		750m	5	C	CA47	TO116
68	SFF1119KT		AØ	3	2	20	100m	500	-20	1.0m	PMS	-1.0	-5.0	30	.30		750m	2	8	CA47	TO116
69	SFF1119PM		AØ	3	2	20	100m	450	-20	1.0m	PMS	-1.0	-5.0	30	.30		750m	5	C	CA47	TO116
70	SFF1119PT		AØ	3	2	20	100m	500	-20	1.0m	PMS	-1.0	-5.0	30	.30		750m	2	8	CA47	TO116
71	MEM853D		AØ	3	4	25	10m	150	20	100u	PMS	-20	0.0				1.8	6	C	CA74	DL24bg
72	G124AL		AØ	4	1	30	100m	450	-20	1.0m	PMS	-1.5	-4.0	20	0.0		750m	5	C	CA166	F14-4a
73	G124BL		AØ	4	1	30	100m	500	20	1.0m	PMS	-20	0.0	20	0.0		750m	2	8	CA108	F14-4a
74	G123BL		AØ	4	2	20	100m	500	20	1.0m	PMS	-20	0.0	20	0.0		750m	2	8	CA49	F14-4a
75	MEM857D		AØ	4	2	25	10m	150	20	100u	PMS	-20	0.0				1.8	6	C	CA176	DL24bg
76	MEM857F		AØ	4	2	25	10m	150	20	100u	PMS	-20	0.0				1.8	6	C	CA176	F24-5
77	MEM857P		AØ	4	2	25	10m	150	20	100u	PMS	-20	0.0				1.8	6	8	CA176	DL24h
78	DM853D		AØ	4	3	25	10m	150	20	100u	PMS	-20	0.0				1.8	6	8	CA74	DL24bg
79	DM853F		AØ	4	3	25	10m	150	20	100u	PMS	-20	0.0				1.8	6	8	CA74	F24-5
80	DM853P		AØ	4	3	25	10m	150	20	100u	PMS	-20	0.0				1.8	6	8	CA74	DL24h
81	MEM853F		AØ	4	3	25	10m	150	20	100u	PMS	-20	0.0	30			1.8	6	C	CA74	F24-5
82	MEM853P		AØ	4	3	25	10m	150	20	100u	PMS	-20	0.0	30			1.8	6	8	CA74	DL24h
83	DG123BL		AØ∅	5	1	20	30m	500	10	1.0m	PMS	.40	1.0	20	10	500n	750m	2	8	CA63	F14-4a
84	DG125BL		AØ∅	5	1	20	30m	500	10	1.0m	PMS	.50	4.1	20	10	500n	750m	2	8	CA64	F14-4a
85	G116BL		AØ	5	1	30	100m	500	20	1.0m	PMS	-20	0.0	20	0.0		750m	2	8	CA44	F14-4a
86	SFF1116KM		AØ	5	1	20	100m	450	-20	1.0m	PMS	-1.0	-5.0	30	.30		750m	5	C	CA44	TO116
87	SFF1116KT		AØ	5	1	20	100m	500	-20	1.0m	PMS	-1.0	-5.0	30	.30		750m	2	8	CA44	TO116
88	SFF1116PM		AØ	5	1	20	100m	450	-20	1.0m	PMS	-1.0	-5.0	30	.30		750m	5	C	CA44	TO86
89	SFF1116PT		AØ	5	1	20	100m	500	-20	1.0m	PMS	-1.0	-5.0	30	.30		750m	2	8	CA44	TO86
90	G117BL		AØ	6	1	20	100m	500	20	1.0m	PMS	-20	0.0	20	0.0		750m	2	8	CA45	F14-4a
91	G118BL		AØ	6	1	20	100m	500	20	1.0m	PMS	-20	0.0	20	0.0		750m	2	8	CA46	F14-4a
92	MEM855D		AØ	6	1	25	3.0m	350	20	100u	PMS	-20	0.0				900m	6	C	CA128	DL14h
93	MEM855F		AØ	6	1	25	3.0m	350	20	100u	PMS	-20	0.0				900m	6	C	CA128	F14-10a
94	MEM855P		AØ	6	1	25	3.0m	350	20	100u	PMS	-20	0.0				900m	6	8	CA128	DL14bb
95	MEM856D		AØ	6	1	40	1.0m	1.0k	20	100u	PMS	-20	0.0				300m	6	C	CA128	DL14h
96	MEM856F		AØ	6	1	40	1.0m	1.0k	20	100u	PMS	-20	0.0				300m	6	C	CA128	F14-10a
97	MEM856P		AØ	6	1	40	1.0m	1.0k	20	100u	PMS	-20	0.0				300m	6	8	CA128	DL14bb
98	SFF153E		AØ	6	1	20		4.0k	-10	1.0m	PMS	-2.8	-5.0	20	10		300m	0	7	CA52	TO116
99	SFF153K		AØ	6	1	20		4.0k	-10	1.0m	PMS	-2.8	-5.0	20	10		300m	0	7	CA52	TO116
100	SFF153KM		AØ	6	1	20		4.0k	-10	1.0m	PMS	-2.8	-5.0	20	10		300m	5	C	CA52	TO116
101	SFF1115KT		AØ	6	1	20	100m	500	-20	1.0m	PMS	-1.0	-5.0	30	.30		750m	2	8	CA48	D16-13a
102	SFF1115PM		AØ	6	1	20	100m	450	-20	1.0m	PMS	-1.0	-5.0	30	.30		750m	5	C	CA48	F16-2
103	SFF1115PT		AØ	6	1	20	100m	500	-20	1.0m	PMS	-1.0	-5.0	30	.30		750m	2	8	CA48	F16-2
104	SFF1117KM		AØ	6	1	20	100m	450	-20	1.0m	PMS	-1.0	-5.0	30	.30		750m	5	C	CA45	TO116
105	SFF1117KT		AØ	6	1	20	100m	500	-20	1.0m	PMS	-1.0	-5.0	30	.30		750m	2	8	CA45	TO116
106	SFF1117PM		AØ	6	1	20	100m	450	-20	1.0m	PMS	-1.0	-5.0	30	.30		750m	5	C	CA45	TO86
107	SFF1117PT		AØ	6	1	20	100m	500	-20	1.0m	PMS	-1.0	-5.0	30	.30		750m	2	8	CA45	TO86
108	SFF1118KM		AØ	6	1	20	100m	450	-20	1.0m	PMS	-1.0	-5.0	30	.30		750m	5	C	CA46	TO116
109	SFF1118KT		AØ	6	1	20	100m	500	-20	1.0m	PMS	-1.0	-5.0	30	.30		750m	2	8	CA46	TO116
110	SFF1118PM		AØ	6	1	20	100m	450	-20	1.0m	PMS	-1.0	-5.0	30	.30		750m	5	C	CA46	TO86

SYMBOLS AND CODES EXPLAINED IN INTERPRETER

11. ANALOG GATE SWITCHES BILATERAL,MULTIPLE

IN ORDER OF: (1)TECHN (2)SW FORM (3)SWS/CKT (4)DEV CKTS & (5)TYPE NUMBER

LINE No.	5 TYPE NUMBER	DATA SHT.	2 SF WO R M	3 SWS PER CKT	4 DC EK VT S	MAXIMUM SW VOLT P-P (V)	MAXIMUM SW CURR P-P (A)	MAXIMUM DRAIN/ SOURCE ON RESISTANCE RDS (Ω)	° VD (V)	° IS (A)	1 T E C H N	CONTROL LOGIC LEVELS MAX '0' (V)	MIN '1' (V)	RATED PWR SUP SPAN NEG (V)	POS (V)	MAX ON TIME tON (S)	MAX OPER POWER DISS (W)	OPER TEMP RANGE CODE -	+	DRAWINGS LOGIC OR BLOCK	OUTLINE Δ=MO
1	SFF1118PT		AØ	6	1	20	100m	500	-20	1.0m	PMS	-1.0	-5.0	30	.30		750m	2	8	CA46	TO86
2	DG175AA		ABØ	2	1	20	20m	200	10	1.0m	PMS	.80	2.0	20	10	200n	450m	5	C	CA68	CN4a
3	DG175BA		ABØ	2	1	20	20m	250	10	1.0m	PMS	.80	2.0	20	10	200n	450m	2	8	CA68	CN4a
4	SI3002AA		CØ	1	1	20	30m	400	10	1.0m	PMS	.80	2.0	20	10	1.0u	450m	5	C	CA70	CN4a
5	SI3002BP		CØ	1	1	20	30m	400	10	1.0m	PMS	.80	2.0	20	10	1.0u	825m	2	8	CA70a	DL14aa
6	DG170AP		CØ	1	3	20	12m	800	10	100u	PMS	.80	2.0	20	10	300n	825m	5	C	CA65	DL16dc
7	DG170BP		CØ	1	3	20	12m	850	10	100u	PMS	.80	2.0	20	10	300n	825m	2	8	CA65	DL16dc
8	DG170CJ		CØ	1	3	20	12m	850	10	100u	PMS	.80	2.0	20	10	300n	470m	0	7	CA65	DL16ca
9	DG173AL		CØ	2	1	20	20m	450	10	1.0m	PMS	.80	2.0	20	10	200n	750m	5	C	CA67	F14-4a
10	DG173AP		CØ	2	1	20	20m	450	10	1.0m	PMS	.80	2.0	20	10	200n	825m	5	C	CA67a	DL14aa
11	DG173BL		CØ	2	1	20	20m	500	10	1.0m	PMS	.80	2.0	20	10	200n	750m	2	8	CA67	F14-4a
12	DG173BP		CØ	2	1	20	20m	500	10	1.0m	PMS	.80	2.0	20	10	200n	825m	2	8	CA67a	DL14aa
13	SFF150		CØ	1	2	20		800	-10	1.0m	PMS		5.0	20	10		200m	0	7	CA30	TO100
14	SFF150M		CØ	1	2	20		800	-10	1.0m	PMS		5.0	20	10		200m	5	C	CA30	TO100
15	AH0133CN		A	1	2	30	30m	30	10	1.0m	TTL	.80	2.5	18	12	800n	500m	2	8	CA120	DL14o
16	AH0134CN		A	1	2	30	30m	80	10	1.0m	TTL	.80	2.5	18	12	800n	500m	2	8	CA120	DL14o
17	AH0151CN		A	1	2	25	30m	15	7.5	1.0m	TTL	.80	2.5	15	15	1.0u	500m	2	8	CA120	DL14o
18	AH0152CN		A	1	2	25	30m	50	7.5	1.0m	TTL	.80	2.5	15	15	800n	500m	2	8	CA120	DL14o
19	SW02FP		A	1	4			100	0.0	1.0m	TTL	.80	2.0	15	15	400n		0	7		DL16bt
20	SW04FP		A	1	4			100	0.0	1.0m	TTL	.80	2.0	15	15	400n		0	7		DL16bt
21	IH5009CDA		A	5	1	20	2.0m	100	1.5	2.0m	TTL	11	1.5	0.0	15	500n	500m	0	7	CA36a	DL8u
22	IH5009CDE		A	5	1	20	2.0m	100	1.5	2.0m	TTL	11	1.5	0.0	15	500n	500m	0	7	CA36a	DL14bi
23	IH5009CPA		A	5	1	20	2.0m	100	1.5	2.0m	TTL	11	1.5	0.0	15	500n	500m	0	7	CA36a	DL8u
24	IH5009CPE		A	5	1	20	2.0m	100	1.5	2.0m	TTL	11	1.5	0.0	15	500n	500m	0	7	CA36a	DL14bi
25	IH5009MDA		A	5	1	20	2.0m	100	1.5	2.0m	TTL	11	1.5	0.0	15	500n	500m	5	C	CA36a	DL8u
26	IH5009MDE		A	5	1	20	2.0m	100	1.5	2.0m	TTL	11	1.5	0.0	15	500n	500m	5	C	CA36a	DL14bi
27	IH5009MPA		A	5	1	20	2.0m	100	1.5	2.0m	TTL	11	1.5	0.0	15	500n	500m	5	C	CA36a	DL8u
28	IH5009MPE		A	5	1	20	2.0m	100	1.5	2.0m	TTL	11	1.5	0.0	15	500n	500m	5	C	CA36a	DL14bi
29	IH5011CDA		A	5	1	20	2.0m	100	1.5	2.0m	TTL	11	1.5	0.0	15	500n	500m	0	7	CA36a	DL8u
30	IH5011CDD		A	5	1	20	2.0m	100	1.5	2.0m	TTL	11	1.5	0.0	15	500n	500m	0	7	CA36a	DL14bi
31	IH5011CPA		A	5	1	20	2.0m	100	1.5	2.0m	TTL	11	1.5	0.0	15	500n	500m	0	7	CA36a	DL8u
32	IH5011CPD		A	5	1	20	2.0m	100	1.5	2.0m	TTL	11	1.5	0.0	15	500n	500m	0	7	CA36a	DL14bi
33	IH5011MDA		A	5	1	20	2.0m	100	1.5	2.0m	TTL	11	1.5	0.0	15	500n	500m	5	C	CA36a	DL8u
34	IH5011MDD		A	5	1	20	2.0m	100	1.5	2.0m	TTL	11	1.5	0.0	15	500n	500m	5	C	CA36a	DL14bi
35	IH5011MPA		A	5	1	20	2.0m	100	1.5	2.0m	TTL	11	1.5	0.0	15	500n	500m	5	C	CA36a	DL8u
36	IH5011MPD		A	5	1	20	500p	100	1.5	2.0m	TTL	11	1.5	0.0	15	500n	500m	5	C	CA36a	DL14bi
37	IH5013CDA		A	5	1	20	500p	100	1.5	2.0m	TTL	11	1.5	0.0	15	500n	500m	0	7	CA36a	DL8u
38	IH5013CDE		A	5	1	20	500p	100	1.5	2.0m	TTL	11	1.5	0.0	15	500n	500m	0	7	CA36a	DL14bi
39	IH5013CPA		A	5	1	20	500p	100	1.5	2.0m	TTL	11	1.5	0.0	15	500n	500m	0	7	CA36a	DL8u
40	IH5013CPE		A	5	1	20	2.0m	100	1.5	2.0m	TTL	11	1.5	0.0	15	500n	500m	0	7	CA36a	DL14bi
41	IH5013MDA		A	5	1	20	2.0m	100	1.5	2.0m	TTL	11	1.5	0.0	15	500n	500m	5	C	CA36a	DL8u
42	IH5013MDE		A	5	1	20	2.0m	100	1.5	2.0m	TTL	11	1.5	0.0	15	500n	500m	5	C	CA36a	DL14bi
43	IH5013MPA		A	5	1	20	500p	100	1.5	2.0m	TTL	11	1.5	0.0	15	500n	500m	5	C	CA36a	DL8u
44	IH5013MPE		A	5	1	20	2.0m	100	1.5	2.0m	TTL	11	1.5	0.0	15	500n	500m	5	C	CA36a	DL14bi
45	IH5015CDA		A	5	1	20	2.0m	100	1.5	2.0m	TTL	11	1.5	0.0	15	500n	500m	0	7	CA36a	DL8u
46	IH5015CDD		A	5	1	20	2.0m	100	1.5	2.0m	TTL	11	1.5	0.0	15	500n	500m	0	7	CA36a	DL14bi
47	IH5015CPA		A	5	1	20	2.0m	100	1.5	2.0m	TTL	11	1.5	0.0	15	500n	500m	0	7	CA36a	DL8u
48	IH5015CPD		A	5	1	20	2.0m	100	1.5	2.0m	TTL	11	1.5	0.0	15	500n	500m	0	7	CA36a	DL14bi
49	IH5015MDA		A	5	1	20	2.0m	100	1.5	2.0m	TTL	11	1.5	0.0	15	500n	500m	5	C	CA36a	DL8u
50	IH5015MDD		A	5	1	20	2.0m	100	1.5	2.0m	TTL	11	1.5	0.0	15	500n	500m	5	C	CA36a	DL14bi
51	IH5015MPA		A	5	1	20	500p	100	1.5	2.0m	TTL	11	1.5	0.0	15	500n	500m	5	C	CA36a	DL8u
52	IH5015MPD		A	5	1	20	2.0m	100	1.5	2.0m	TTL	11	1.5	0.0	15	500n	500m	5	C	CA36a	DL14bi
53	IH5017CDA		A	5	1	20	2.0m	100	1.5	2.0m	TTL	11	1.5	0.0	15	500n	500m	0	7	CA36a	DL8u
54	IH5017CDE		A	5	1	20	2.0m	100	1.5	2.0m	TTL	11	1.5	0.0	15	500n	500m	0	7	CA36a	DL14bi
55	IH5017CPD		A	5	1	20	2.0m	100	1.5	2.0m	TTL	11	1.5	0.0	15	500n	500m	0	7	CA36a	DL14bi
56	IH5017MDA		A	5	1	20	2.0m	100	1.5	2.0m	TTL	11	1.5	0.0	15	500n	500m	5	C	CA36a	DL8u
57	IH5017MDE		A	5	1	20	2.0m	100	1.5	2.0m	TTL	11	1.5	0.0	15	500n	500m	5	C	CA36a	DL14bi
58	IH5017MPD		A	5	1	20	2.0m	100	1.5	2.0m	TTL	11	1.5	0.0	15	500n	500m	5	C	CA36a	DL14bi
59	IH5017MPE		A	5	1	20	2.0m	100	1.5	2.0m	TTL	11	1.5	0.0	15	500n	500m	5	C	CA36a	DL14bi
60	IH5019CDA		A	5	1	20	2.0m	100	1.5	2.0m	TTL	11	1.5	0.0	15	500n	500m	0	7	CA36a	DL8u
61	IH5019CDD		A	5	1	20	2.0m	100	1.5	2.0m	TTL	11	1.5	0.0	15	500n	500m	0	7	CA36a	DL14ah
62	IH5019CPD		A	5	1	20	2.0m	100	1.5	2.0m	TTL	11	1.5	0.0	15	500n	500m	0	7	CA36a	DL14bi
63	IH5019CPE		A	5	1	20	2.0m	100	1.5	2.0m	TTL	11	1.5	0.0	15	500n	500m	0	7	CA36a	DL14bi
64	IH5019MDA		A	5	1	20	2.0m	100	1.5	2.0m	TTL	11	1.5	0.0	15	500n	500m	5	C	CA36a	DL8u
65	IH5019MDD		A	5	1	20	2.0m	100	1.5	2.0m	TTL	11	1.5	0.0	15	500n	500m	5	C	CA36a	DL14ah
66	IH5019MPD		A	5	1	20	2.0m	100	1.5	2.0m	TTL	11	1.5	0.0	15	500n	500m	5	C	CA36a	DL14bi
67	IH5019MPE		A	5	1	20	2.0m	100	1.5	2.0m	TTL	11	1.5	0.0	15	500n	500m	5	C	CA36a	DL14bi
68	IH5021CDA		A	5	1	20	2.0m	100	1.5	2.0m	TTL	11	1.5	0.0	15	500n	500m	0	7	CA36a	DL8u
69	IH5021CDE		A	5	1	20	2.0m	100	1.5	2.0m	TTL	11	1.5	0.0	15	500n	500m	0	7	CA36a	DL14bi
70	IH5021CPD		A	5	1	20	2.0m	100	1.5	2.0m	TTL	11	1.5	0.0	15	500n	500m	0	7	CA36a	DL14bi
71	IH5021CPE		A	5	1	20	2.0m	100	1.5	2.0m	TTL	11	1.5	0.0	15	500n	500m	0	7	CA36a	DL14bi
72	IH5021MDA		A	5	1	20	2.0m	100	1.5	2.0m	TTL	11	1.5	0.0	15	500n	500m	5	C	CA36a	DL8u
73	IH5021MDE		A	5	1	20	2.0m	100	1.5	2.0m	TTL	11	1.5	0.0	15	500n	500m	5	C	CA36a	DL14bi
74	IH5021MPD		A	5	1	20	500p	100	1.5	2.0m	TTL	11	1.5	0.0	15	500n	500m	5	C	CA36a	DL14bi
75	IH5021MPE		A	5	1	20	2.0m	100	1.5	2.0m	TTL	11	1.5	0.0	15	500n	500m	5	C	CA36a	DL14bi
76	IH5023CDA		A	5	1	20	2.0m	100	1.5	2.0m	TTL	11	1.5	0.0	15	500n	500m	0	7	CA36a	DL8u
77	IH5023CDD		A	5	1	20	2.0m	100	1.5	2.0m	TTL	11	1.5	0.0	15	500n	500m	0	7	CA36a	DL14ah
78	IH5023CDE		A	5	1	20	2.0m	100	1.5	2.0m	TTL	11	1.5	0.0	15	500n	500m	0	7	CA36a	DL14bi
79	IH5023CPD		A	5	1	20	2.0m	100	1.5	2.0m	TTL	11	1.5	0.0	15	500n	500m	0	7	CA36a	DL14bi
80	IH5023CPE		A	5	1	20	2.0m	100	1.5	2.0m	TTL	11	1.5	0.0	15	500n	500m	0	7	CA36a	DL14bi
81	IH5023MDA		A	5	1	20	2.0m	100	1.5	2.0m	TTL	11	1.5	0.0	15	500n	500m	5	C	CA36a	DL8u
82	IH5023MDD		A	5	1	20	2.0m	100	1.5	2.0m	TTL	11	1.5	0.0	15	500n	500m	5	C	CA36a	DL14ah
83	IH5023MDE		A	5	1	20	2.0m	100	1.5	2.0m	TTL	11	1.5	0-0	15	500n	500m	5	C	CA36a	DL14bi
84	IH5023MPD		A	5	1	20	2.0m	100	1.5	2.0m	TTL	11	1.5	0.0	15	500n	500m	5	C	CA36a	DL14bi
85	IH5023MPE		A	5	1	20	2.0m	100	1.5	2.0m	TTL	11	1.5	0.0	15	500n	500m	5	C	CA36a	DL14bi
86	ITS7319CDA		A	5	1	20	2.0m	100	1.5	2.0m	TTL	11	1.5	0.0	15	500n	500m	0	7	CA36a	DL8u
87	ITS7319CDD		A	5	1	20	2.0m	100	1.5	2.0m	TTL	11	1.5	0.0	15	500n	500m	0	7	CA36a	DL14ah
88	ITS7319CDE		A	5	1	20	2.0m	100	1.5	2.0m	TTL	11	1.5	0.0	15	500n	500m	0	7	CA36a	DL14bi
89	ITS7319CPA		A	5	1	20	2.0m	100	1.5	2.0m	TTL	11	1.5	0.0	15	500n	500m	0	7	CA36a	DL14bi
90	ITS7319CPD		A	5	1	20	500p	100	1.5	2.0m	TTL	11	1.5	0.0	15	500n	500m	0	7	CA36a	DL14bi
91	ITS7319CPE		A	5	1	20	2.0m	100	1.5	2.0m	TTL	11	1.5	0.0	15	500n	500m	0	7	CA36a	DL14bi
92	ITS7319MDA		A	5	1	20	2.0m	100	1.5	2.0m	TTL	11	1.5	0.0	15	500n	500m	5	C	CA36a	DL8u
93	ITS7319MDD		A	5	1	20	2.0m	100	1.5	2.0m	TTL	11	1.5	0.0	15	500n	500m	5	C	CA36a	DL14ah
94	ITS7319MDE		A	5	1	20	2.0m	100	1.5	2.0m	TTL	11	1.5	0.0	15	500n	500m	5	C	CA36a	DL14bi
95	ITS7319MPA		A	5	1	20	2.0m	100	1.5	2.0m	TTL	11	1.5	0.0	15	500n	500m	5	C	CA36a	DL8u
96	ITS7319MPD		A	5	1	20	2.0m	100	1.5	2.0m	TTL	11	1.5	0.0	15	500n	500m	5	C	CA36a	DL14bi
97	ITS7319MPE		A	5	1	20	2.0m	100	1.5	2.0m	TTL	11	1.5	0.0	15	500n	500m	5	C	CA36a	DL14bi
98	ITS7321CDA		A	5	1	20	500p	100	1.5	2.0m	TTL	11	1.5	0.0	15	500n	500m	0	7	CA36a	DL8u
99	ITS7321CDD		A	5	1	20	500p	100	1.5	2.0m	TTL	11	1.5	0.0	15	500n	500m	0	7	CA36a	DL14ah
100	ITS7321CDE		A	5	1	20	500p	100	1.5	2.0m	TTL	11	1.5	0.0	15	500n	500m	0	7	CA36a	DL14bi
101	ITS7321CPA		A	5	1	20	500p	100	1.5	2.0m	TTL	11	1.5	0.0	15	500n	500m	0	7	CA36a	DL8u
102	ITS7321CPD		A	5	1	20	2.0m	100	1.5	2.0m	TTL	11	1.5	0.0	15	500n	500m	0	7	CA36a	DL14bi
103	ITS7321CPE		A	5	1	20	2.0m	100	1.5	2.0m	TTL	11	1.5	0.0	15	500n	500m	0	7	CA36a	DL14bi
104	ITS7321MDA		A	5	1	20	2.0m	100	1.5	2.0m	TTL	11	1.5	0.0	15	500n	500m	5	C	CA36a	DL8u
105	ITS7321MDD		A	5	1	20	2.0m	100	1.5	2.0m	TTL	11	1.5	0.0	15	500n	500m	5	C	CA36a	DL14ah
106	ITS7321MDE		A	5	1	20	500p	100	1.5	2.0m	TTL		1.5	0.0	15	500n	500m	5	C	CA36a	DL14bi
107	ITS7321MPA		A	5	1	20	500p	100	1.5	2.0m	TTL	11	1.5	0.0	15	500n	500m	5	C	CA36a	DL8u
108	ITS7321MPD		A	5	1	20	500p	100	1.5	2.0m	TTL	11	1.5	0.0	15	500n	500m	5	C	CA36a	DL14bi
109	ITS7321MPE		A	5	1	20	500p	100	1.5	2.0m	TTL		1.5	0.0	15	500n	500m	5	C	CA36a	DL14bi
110	ITS7323CDA		A	5	1	20	500p	100	1.5	2.0m	TTL	11	1.5	0.0	15	500n	500m	0	7	CA36a	DL8u

SYMBOLS AND CODES EXPLAINED IN INTERPRETER

11. ANALOG GATE SWITCHES BILATERAL,MULTIPLE

IN ORDER OF: (1)TECHN (2)SW FORM (3)SWS/CKT (4)DEV CKTS & (5)TYPE NUMBER

LINE No.	5 TYPE NUMBER	DATA SHT.	2 SF WO R M	3 SWS PER CKT	4 DC EK VT S	MAXIMUM SW VOLT P-P (V)	MAXIMUM SW CURR P-P (A)	MAXIMUM DRAIN/ SOURCE ON RESISTANCE RDS (Ω)	° VD (V)	° IS (A)	1 T E C H N	CONTROL LOGIC LEVELS MAX '0' (V)	MIN '1' (V)	RATED PWR SUP SPAN NEG (V)	POS (V)	MAX ON TIME tON (S)	MAX OPER POWER DISS (W)	OPER TEMP RANGE CODE -	+	DRAWINGS LOGIC OR BLOCK	OUTLINE Δ=MO
1	ITS7323CDD		A	5	1	20	500p	100	1.5	2.0m	TTL		1.5	0.0	15	500n	500m	0	7	CA36a	DL14ah
2	ITS7323CDE		A	5	1	20	500p	100	1.5	2.0m	TTL	11	1.5	0.0	15	500n	500m	0	7	CA36a	DL14bi
3	ITS7323CPA		A	5	1	20	500p	100	1.5	2.0m	TTL	11	1.5	0.0	15	500n	500m	0	7	CA36a	DL8u
4	ITS7323CPD		A	5	1	20	500p	100	1.5	2.0m	TTL		1.5	0.0	15	500n	500m	0	7	CA36a	DL14bi
5	ITS7323CPE		A	5	1	20	500p	100	1.5	2.0m	TTL	11	1.5	0.0	15	500n	500m	0	7	CA36a	DL14bi
6	ITS7323MDA		A	5	1	20	500p	100	1.5	2.0m	TTL	11	1.5	0.0	15	500n	500m	5	C	CA36a	DL8u
7	ITS7323MDD		A	5	1	20	500p	100	1.5	2.0m	TTL	11	1.5	0.0	15	500n	500m	5	C	CA36a	DL14ah
8	ITS7323MDE		A	5	1	20	500p	100	1.5	2.0m	TTL	11	1.5	0.0	15	500n	500m	5	C	CA36a	DL14bi
9	ITS7323MPA		A	5	1	20	500p	100	1.5	2.0m	TTL	11	1.5	0.0	15	500n	500m	5	C	CA36a	DL8u
10	ITS7323MPD		A	5	1	20	500p	100	1.5	2.0m	TTL	11	1.5	0.0	15	500n	500m	5	C	CA36a	DL14bi
11	ITS7323MPE		A	5	1	20	500p	100	1.5	2.0m	TTL	11	1.5	0.0	15	500n	500m	5	C	CA36a	DL14bi
12	ITS7325CDA		A	5	1	20	500p	100	1.5	2.0m	TTL	11	1.5	0.0	15	500n	500m	0	7	CA36a	DL8u
13	ITS7325CDD		A	5	1	20	500p	100	1.5	2.0m	TTL	11	1.5	0.0	15	500n	500m	0	7	CA36a	DL14ah
14	ITS7325CDE		A	5	1	20	500p	100	1.5	2.0m	TTL	11	1.5	0.0	15	500n	500m	0	7	CA36a	DL14bi
15	ITS7325CPA		A	5	1	20	500p	100	1.5	2.0m	TTL	11	1.5	0.0	15	500n	500m	0	7	CA36a	DL8u
16	ITS7325CPD		A	5	1	20	500p	100	1.5	2.0m	TTL	11	1.5	0.0	15	500n	500m	0	7	CA36a	DL14bi
17	ITS7325CPE		A	5	1	20	500p	100	1.5	2.0m	TTL	11	1.5	0.0	15	500n	500m	0	7	CA36a	DL14bi
18	ITS7325MDA		A	5	1	20	500p	100	1.5	2.0m	TTL	11	1.5	0.0	15	500n	500m	5	C	CA36a	DL8u
19	ITS7325MDD		A	5	1	20	500p	100	1.5	2.0m	TTL	11	1.5	0.0	15	500n	500m	5	C	CA36a	DL14bi
20	ITS7325MDE		A	5	1	20	500p	100	1.5	2.0m	TTL	11	1.5	0.0	15	500n	500m	5	C	CA36a	DL14bi
21	ITS7325MPA		A	5	1	20	500p	100	1.5	2.0m	TTL	11	1.5	0.0	15	500n	500m	5	C	CA36a	DL8u
22	ITS7325MPD		A	5	1	20	500p	100	1.5	2.0m	TTL	11	1.5	0.0	15	500n	500m	5	C	CA36a	DL14bi
23	ITS7325MPE		A	5	1	20	2.0m	100	1.5	2.0m	TTL	11	1.5	0.0	15	500n	500m	5	C	CA36a	DL14bi
24	ITS7327CDA		A	5	1	20	500p	100	1.5	2.0m	TTL	11	1.5	0.0	15	500n	500m	0	7	CA36a	DL8u
25	ITS7327CDD		A	5	1	20	500p	100	1.5	2.0m	TTL	11	1.5	0.0	15	500n	500m	0	7	CA36a	DL14ah
26	ITS7327CDE		A	5	1	20	500p	100	1.5	2.0m	TTL	11	1.5	0.0	15	500n	500m	0	7	CA36a	DL14bi
27	ITS7327CPA		A	5	1	20	500p	100	1.5	2.0m	TTL	11	1.5	0.0	15	500n	500m	0	7	CA36a	DL8u
28	ITS7327CPD		A	5	1	20	500p	100	1.5	2.0m	TTL	11	1.5	0.0	15	500n	500m	0	7	CA36a	DL14bi
29	ITS7327CPE		A	5	1	20	500p	100	1.5	2.0m	TTL	11	1.5	0.0	15	500n	500m	0	7	CA36a	DL14bi
30	ITS7327MDA		A	5	1	20	500p	100	1.5	2.0m	TTL	11	1.5	0.0	15	500n	500m	5	C	CA36a	DL8u
31	ITS7327MDD		A	5	1	20	500p	100	1.5	2.0m	TTL	11	1.5	0.0	15	500n	500m	5	C	CA36a	DL14ah
32	ITS7327MDE		A	5	1	20	500p	100	1.5	2.0m	TTL	11	1.5	0.0	15	500n	500m	5	C	CA36a	DL14bi
33	ITS7327MPA		A	5	1	20	500p	100	1.5	2.0m	TTL	11	1.5	0.0	15	500n	500m	5	C	CA36a	DL8u
34	ITS7327MPD		A	5	1	20	500p	100	1.5	2.0m	TTL	11	1.5	0.0	15	500n	500m	5	C	CA36a	DL14bi
35	ITS7327MPE		A	5	1	20	500p	100	1.5	2.0m	TTL	11	1.5	0.0	15	500n	500m	5	C	CA36a	DL14bi
36	ITS7329CDA		A	5	1	20	500p	100	1.5	2.0m	TTL	11	1.5		15	500n	500m	0	7	CA36a	DL8u
37	ITS7329CDD		A	5	1	20	500p	100	1.5	2.0m	TTL	11	1.5	0.0	15	500n	500m	0	7	CA36a	DL14ah
38	ITS7329CDE		A	5	1	20	500p	100	1.5	2.0m	TTL	11	1.5	0.0	15	500n	500m	0	7	CA36a	DL14bi
39	ITS7329CPA		A	5	1	20	500p	100	1.5	2.0m	TTL	11	1.5		15	500n	500m	0	7	CA36a	DL8u
40	ITS7329CPD		A	5	1	20	500p	100	1.5	2.0m	TTL	11	1.5	0.0	15	500n	500m	0	7	CA36a	DL14bi
41	ITS7329CPE		A	5	1	20	500p	100	1.5	2.0m	TTL	11	1.5	0.0	15	500n	500m	0	7	CA36a	DL14bi
42	ITS7329MDA		A	5	1	20	500p	100	1.5	2.0m	TTL	11	1.5	0.0	15	500n	500m	5	C	CA36a	DL8u
43	ITS7329MDD		A	5	1	20	500p	100	1.5	2.0m	TTL	11	1.5	0.0	15	500n	500m	5	C	CA36a	DL14ah
44	ITS7329MDE		A	5	1	20	500p	100	1.5	2.0m	TTL	11	1.5	0.0	15	500n	500m	5	C	CA36a	DL14bi
45	ITS7329MPA		A	5	1	20	500p	100	1.5	2.0m	TTL	11	1.5	0.0	15	500n	500m	5	C	CA36a	DL8u
46	ITS7329MPD		A	5	1	20	500p	100	1.5	2.0m	TTL	11	1.5	0.0	15	500n	500m	5	C	CA36a	DL14bi
47	ITS7329MPE		A	5	1	20	500p	100	1.5	2.0m	TTL	11	1.5	0.0	15	500n	500m	5	C	CA36a	DL14bi
48	ITS7331CDA		A	5	1	20	500p	100	1.5	2.0m	TTL	11	1.5	0.0	15	500n	500m	0	7	CA36a	DL8u
49	ITS7331CDD		A	5	1	20	500p	100	1.5	2.0m	TTL	11	1.5	0.0	15	500n	500m	0	7	CA36a	DL14ah
50	ITS7331CDE		A	5	1	20	500p	100	1.5	2.0m	TTL	11	1.5	0.0	15	500n	500m	0	7	CA36a	DL14bi
51	ITS7331CPA		A	5	1	20	500p	100	1.5	2.0m	TTL	11	1.5	0.0	15	500n	500m	0	7	CA36a	DL8u
52	ITS7331CPD		A	5	1	20	500p	100	1.5	2.0m	TTL	11	1.5	0.0	15	500n	500m	0	7	CA36a	DL14bi
53	ITS7331CPE		A	5	1	20	500p	100	1.5	2.0m	TTL	11	1.5	0.0	15	500n	500m	0	7	CA36a	DL14bi
54	ITS7331MDA		A	5	1	20	500p	100	1.5	2.0m	TTL	11	1.5	0.0	15	500n	500m	5	C	CA36a	DL8u
55	ITS7331MDD		A	5	1	20	500p	100	1.5	2.0m	TTL	11	1.5	0.0	15	500n	500m	5	C	CA36a	DL14ah
56	ITS7331MDE		A	5	1	20	500p	100	1.5	2.0m	TTL	11	1.5	0.0	15	500n	500m	5	C	CA36a	DL14bi
57	ITS7331MPA		A	5	1	20	500p	100	1.5	2.0m	TTL	11	1.5	0.0	15	500n	500m	5	C	CA36a	DL8u
58	ITS7331MPD		A	5	1	20	500p	100	1.5	2.0m	TTL	11	1.5	0.0	15	500n	500m	5	C	CA36a	DL14bi
59	ITS7331MPE		A	5	1	20	500p	100	1.5	2.0m	TTL	11	1.5	0.0	15	500n	500m	5	C	CA36a	DL14bi
60	ITS7333CDA		A	5	1	20	500p	100	1.5	2.0m	TTL	11	1.5	0.0	15	500n	500m	0	7	CA36a	DL8u
61	ITS7333CDD		A	5	1	20	500p	100	1.5	2.0m	TTL	11	1.5	0.0	15	500n	500m	0	7	CA36a	DL14ah
62	ITS7333CDE		A	5	1	20	500p	100	1.5	2.0m	TTL	11	1.5	0.0	15	500n	500m	0	7	CA36a	DL14bi
63	ITS7333CPA		A	5	1	20	500p	100	1.5	2.0m	TTL	11	1.5	0.0	15	500n	500m	0	7	CA36a	DL8u
64	ITS7333CPD		A	5	1	20	500p	100	1.5	2.0m	TTL	11	1.5	0.0	15	500n	500m	0	7	CA36a	DL14bi
65	ITS7333CPE		A	5	1	20	500p	100	1.5	2.0m	TTL	11	1.5	0.0	15	500n	500m	0	7	CA36a	DL14bi
66	ITS7333MDA		A	5	1	20	500p	100	1.5	2.0m	TTL	11	1.5	0.0	15	500n	500m	5	C	CA36a	DL8u
67	ITS7333MDD		A	5	1	20	500p	100	1.5	2.0m	TTL	11	1.5	0.0	15	500n	500m	5	C	CA36a	DL14ah
68	ITS7333MDE		A	5	1	20	500p	100	1.5	2.0m	TTL	11	1.5	0.0	15	500n	500m	5	C	CA36a	DL14bi
69	ITS7333MPA		A	5	1	20	500p	100	1.5	2.0m	TTL	11	1.5	0.0	15	500n	500m	5	C	CA36a	DL8u
70	ITS7333MPD		A	5	1	20	500p	100	1.5	2.0m	TTL	11	1.5	0.0	15	500n	500m	5	C	CA36a	DL14bi
71	ITS7333MPE		A	5	1	20	500p	100	1.5	2.0m	TTL	11	1.5	0.0	15	500n	500m	5	C	CA36a	DL14bi
72	ITS7335CDA		A	5	1	20	500p	100	1.5	2.0m	TTL	11	1.5	0.0	15	500n	500m	0	7	CA36a	DL8u
73	ITS7335CDD		A	5	1	20	500p	100	1.5	2.0m	TTL	11	1.5	0.0	15	500n	500m	0	7	CA36a	DL14ah
74	ITS7335CDE		A	5	1	20	2.0m	100	1.5	2.0m	TTL	11	1.5	0.0	15	500n	500m	0	7		DL14bi
75	ITS7335CPA		A	5	1	20	500p	100	1.5	2.0m	TTL	11	1.5	0.0	15	500n	500m	0	7	CA36a	DL8u
76	ITS7335CPD		A	5	1	20	500p	100	1.5	2.0m	TTL	11	1.5	0.0	15	500n	500m	0	7	CA36a	DL14bi
77	ITS7335CPE		A	5	1	20	500p	100	1.5	2.0m	TTL	11	1.5	0.0	15	500n	500m	0	7	CA36a	DL14bi
78	ITS7335MDA		A	5	1	20	500p	100	1.5	2.0m	TTL	11	1.5	0.0	15	500n	500m	5	C	CA36a	DL8u
79	ITS7335MDD		A	5	1	20	500p	100	1.5	2.0m	TTL	11	1.5	0.0	15	500n	500m	5	C	CA36a	DL14ah
80	ITS7335MDE		A	5	1	20	500p	100	1.5	2.0m	TTL	11	1.5	0.0	15	500n	500m	5	C	CA36a	DL14bi
81	ITS7335MPA		A	5	1	20	500p	100	1.5	2.0m	TTL	11	1.5	0.0	15	500n	500m	5	C	CA36a	DL8u
82	ITS7335MPD		A	5	1	20	500p	100	1.5	2.0m	TTL	11	1.5	0.0	15	500n	500m	5	C	CA36a	DL14bi
83	ITS7335MPE		A	5	1	20	500p	100	1.5	2.0m	TTL	11	1.5	0.0	15	500n	500m	5	C	CA36a	DL14bi
84	ITS7337CDA		A	5	1	20	500p	100	1.5	2.0m	TTL	11	1.5	0.0	15	500n	500m	0	7	CA36a	DL8u
85	ITS7337CDD		A	5	1	20	500p	100	1.5	2.0m	TTL	11	1.5	0.0	15	500n	500m	0	7	CA36a	DL14ah
86	ITS7337CDE		A	5	1	20	500p	100	1.5	2.0m	TTL	11	1.5	0.0	15	500n	500m	0	7	CA36a	DL14bi
87	ITS7337CPA		A	5	1	20	500p	100	1.5	2.0m	TTL	11	1.5	0.0	15	500n	500m	0	7	CA36a	DL8u
88	ITS7337CPD		A	5	1	20	500p	100	1.5	2.0m	TTL	11	1.5	0.0	15	500n	500m	0	7	CA36a	DL14bi
89	ITS7337CPE		A	5	1	20	500p	100	1.5	2.0m	TTL	11	1.5	0.0	15	500n	500m	0	7	CA36a	DL14bi
90	ITS7337MDA		A	5	1	20	500p	100	1.5	2.0m	TTL	11	1.5	0.0	15	500n	500m	5	C	CA36a	DL8u
91	ITS7337MDD		A	5	1	20	500p	100	1.5	2.0m	TTL	11	1.5	0.0	15	500n	500m	5	C	CA36a	DL14ah
92	ITS7337MDE		A	5	1	20	500p	100	1.5	2.0m	TTL	11	1.5	0.0	15	500n	500m	5	C	CA36a	DL14bi
93	ITS7337MPA		A	5	1	20	500p	100	1.5	2.0m	TTL	11	1.5	0.0	15	500n	500m	5	C	CA36a	DL8u
94	ITS7337MPD		A	5	1	20	500p	100	1.5	2.0m	TTL	11	1.5	0.0	15	500n	500m	5	C	CA36a	DL14bi
95	ITS7337MPE		A	5	1	20	500p	100	1.5	2.0m	TTL	11	1.5	0.0	15	500n	500m	5	C	CA36a	DL14bi
96	ITS7339CDA		A	5	1	20	500p	100	1.5	2.0m	TTL	11	1.5	0.0	15	500n	500m	0	7	CA36a	DL8u
97	ITS7339CDD		A	5	1	20	500p	100	1.5	2.0m	TTL	11	1.5	0.0	15	500n	500m	0	7	CA36a	DL14ah
98	ITS7339CDE		A	5	1	20	500p	100	1.5	2.0m	TTL	11	1.5	0.0	15	500n	500m	0	7	CA36a	DL14bi
99	ITS7339CPA		A	5	1	20	500p	100	1.5	2.0m	TTL	11	1.5	0.0	15	500n	500m	0	7	CA36a	DL8u
100	ITS7339CPD		A	5	1	20	500p	100	1.5	2.0m	TTL	11	1.5	0.0	15	500n	500m	0	7	CA36a	DL14bi
101	ITS7339CPE		A	5	1	20	500p	100	1.5	2.0m	TTL	11	1.5	0.0	15	500n	500m	0	7	CA36a	DL14bi
102	ITS7339MDA		A	5	1	20	500p	100	1.5	2.0m	TTL	11	1.5	0.0	15	500n	500m	5	C	CA36a	DL8u
103	ITS7339MDD		A	5	1	20	500p	100	1.5	2.0m	TTL	11	1.5	0.0	15	500n	500m	5	C	CA36a	DL14ah
104	ITS7339MDE		A	5	1	20	500p	100	1.5	2.0m	TTL	11	1.5	0.0	15	500n	500m	5	C	CA36a	DL14bi
105	ITS7339MPA		A	5	1	20	500p	100	1.5	2.0m	TTL	11	1.5	0.0	15	500n	500m	5	C	CA36a	DL8u
106	ITS7339MPD		A	5	1	20	500p	100	1.5	2.0m	TTL	11	1.5	0.0	15	500n	500m	5	C	CA36a	DL14bi
107	ITS7339MPE		A	5	1	20	500p	100	1.5	2.0m	TTL	11	1.5	0.0	15	500n	500m	5	C	CA36a	DL14bi
108	ITS7341CDA		A	5	1	20	500p	100	1.5	2.0m	TTL	11	1.5	0.0	15	500n	500m	0	7	CA36a	DL8u
109	ITS7341CDD		A	5	1	20	500p	100	1.5	2.0m	TTL	11	1.5	0.0	15	500n	500m	0	7	CA36a	DL14ah
110	ITS7341CDE		A	5	1	20	500p	100	1.5	2.0m	TTL	11	1.5	0.0	15	500n	500m	0	7	CA36a	DL14bi

SYMBOLS AND CODES EXPLAINED IN INTERPRETER

11. ANALOG GATE SWITCHES BILATERAL,MULTIPLE

IN ORDER OF: (1)TECHN (2)SW FORM (3)SWS/CKT (4)DEV CKTS & (5)TYPE NUMBER

LINE No.	5 TYPE NUMBER	DATA SHT.	2 SF WO R M	3 SWS PER CKT	4 DC EK VT S	MAXIMUM SW VOLT P-P (V)	MAXIMUM SW CURR P-P (A)	MAXIMUM DRAIN/ SOURCE ON RESISTANCE RDS (Ω)	° VD (V)	° IS (A)	1 T E C H N	CONTROL LOGIC LEVELS MAX '0' (V)	MIN '1' (V)	RATED PWR SUP SPAN NEG (V)	POS (V)	MAX ON TIME tON (S)	MAX OPER POWER DISS (W)	OPER TEMP RANGE CODE -	+	DRAWINGS LOGIC OR BLOCK	OUTLINE Δ=MO
1	ITS7341CPA		A	5	1	20	500p	100	1.5	2.0m	TTL	11	1.5	0.0	15	500n	500m	0	7	CA36a	DL8u
2	ITS7341CPD		A	5	1	20	500p	100	1.5	2.0m	TTL	11	1.5	0.0	15	500n	500m	0	7	CA36a	DL14bi
3	ITS7341CPE		A	5	1	20	500p	100	1.5	2.0m	TTL	11	1.5	0.0	15	500n	500m	0	7	CA36a	DL14bi
4	ITS7341MDD		A	5	1	20	500p	100	1.5	2.0m	TTL	11	1.5	0.0	15	500n	500m	5	C	CA36a	DL14ah
5	ITS7341MDE		A	5	1	20	500p	100	1.5	2.0m	TTL	11	1.5	0.0	15	500n	500m	5	C	CA36a	DL14bi
6	ITS7341MPA		A	5	1	20	500p	100	1.5	2.0m	TTL	11	1.5	0.0	15	500n	500m	5	C	CA36a	DL8u
7	ITS7341MPD		A	5	1	20	500p	100	1.5	2.0m	TTL	11	1.5	0.0	15	500n	500m	5	C	CA36a	DL14bi
8	ITS7341MPE		A	5	1	20	500p	100	1.5	2.0m	TTL	11	1.5	0.0	15	500n	500m	5	C	CA36a	DL14bi
9	SH3003HC		AB	2	1	20	10m	200		100u	TTL	1.1	1.9	22	11	400n	231m	0	7	CA51	TO100
10	SH3003HM		AB	2	1	20	10m	200		100u	TTL	1.1	1.9	22	11	350n	231m	5	C	CA51	TO100
11	SW01FP		B	1	4			100	0.0	1.0m	TTL	.80	2.0	15	15	400n		0	7		DL16bt
12	SW03FP		B	1	4			100	0.0	1.0m	TTL	.80	2.0	15	15	400n		0	7		DL16bt
13	SW201CQ1883		B	1	4			150	0.0	1.0m	TTL	.80	2.0	15	15	500n		5	C		DL16bt
14	SW201CQ		B	1	4			150	0.0	1.0m	TTL	.80	2.0	15	15	500n		5	C		DL16bt
15	SW201FP		B	1	4			150	0.0	1.0m	TTL	.80	2.0	15	15	500n		0	7		DL16bt
16	IH5010CDA		B	5	1	20	2.0m	100	1.5	2.0m	TTL	11	1.5	0.0	15	500n	500m	0	7	CA36a	DL8u
17	IH5010CDE		B	5	1	20	2.0m	100	1.5	2.0m	TTL	11	1.5	0.0	15	500n	500m	0	7	CA36a	DL14bi
18	IH5010CPA		B	5	1	20	2.0m	100	1.5	2.0m	TTL	11	1.5	0.0	15	500n	500m	0	7	CA36a	DL8u
19	IH5010CPE		B	5	1	20	2.0m	100	1.5	2.0m	TTL	11	1.5	0.0	15	500n	500m	0	7	CA36a	DL14bi
20	IH5010MDA		B	5	1	20	2.0m	100	1.5	2.0m	TTL	11	1.5	0.0	15	500n	500m	5	C	CA36a	DL8u
21	IH5010MDE		B	5	1	20	2.0m	100	1.5	2.0m	TTL	11	1.5	0.0	15	500n	500m	5	C	CA36a	DL14bi
22	IH5010MPA		B	5	1	20	2.0m	100	1.5	2.0m	TTL	11	1.5	0.0	15	500n	500m	5	C	CA36a	DL8u
23	IH5010MPE		B	5	1	20	2.0m	100	1.5	2.0m	TTL	11	1.5	0.0	15	500n	500m	5	C	CA36a	DL14bi
24	IH5012CDA		B	5	1	20	2.0m	100	1.5	2.0m	TTL	11	1.5	0.0	15	500n	500m	0	7	CA36a	DL8u
25	IH5012CDD		B	5	1	20	2.0m	100	1.5	2.0m	TTL	11	1.5	0.0	15	500n	500m	0	7	CA36a	DL14bi
26	IH5012CPA		B	5	1	20	2.0m	100	1.5	2.0m	TTL	11	1.5	0.0	15	500n	500m	0	7	CA36a	DL8u
27	IH5012CPD		B	5	1	20	2.0m	100	1.5	2.0m	TTL	11	1.5	0.0	15	500n	500m	0	7	CA36a	DL14bi
28	IH5012MDA		B	5	1	20	2.0m	100	1.5	2.0m	TTL	11	1.5	0.0	15	500n	500m	5	C	CA36a	DL8u
29	IH5012MPA		B	5	1	20	2.0m	100	1.5	2.0m	TTL	11	1.5	0.0	15	500n	500m	5	C	CA36a	DL8u
30	IH5014CDA		B	5	1	20	2.0m	100	1.5	2.0m	TTL	11	1.5	0.0	15	500n	500m	0	7	CA36a	DL8u
31	IH5014CDE		B	5	1	20	2.0m	100	1.5	2.0m	TTL	11	1.5	0.0	15	500n	500m	0	7	CA36a	DL14bi
32	IH5014CPA		B	5	1	20	2.0m	100	1.5	2.0m	TTL	11	1.5	0.0	15	500n	500m	0	7	CA36a	DL8u
33	IH5014CPE		B	5	1	20	2.0m	100	1.5	2.0m	TTL	11	1.5	0.0	15	500n	500m	0	7	CA36a	DL14bi
34	IH5014MDA		B	5	1	20	2.0m	100	1.5	2.0m	TTL	11	1.5	0.0	15	500n	500m	5	C	CA36a	DL8u
35	IH5014MDE		B	5	1	20	2.0m	100	1.5	2.0m	TTL	11	1.5	0.0	15	500n	500m	5	C	CA36a	DL14bi
36	IH5014MPA		B	5	1	20	2.0m	100	1.5	2.0m	TTL	11	1.5	0.0	15	500n	500m	5	C	CA36a	DL8u
37	IH5014MPE		B	5	1	20	2.0m	100	1.5	2.0m	TTL	11	1.5	0.0	15	500n	500m	5	C	CA36a	DL14bi
38	IH5016CDA		B	5	1	20	2.0m	100	1.5	2.0m	TTL	11	1.5	0.0	15	500n	500m	0	7	CA36a	DL8u
39	IH5016CDD		B	5	1	20	2.0m	100	1.5	2.0m	TTL	11	1.5	0.0	15	500n	500m	0	7	CA36a	DL14ah
40	IH5016CPA		B	5	1	20	2.0m	100	1.5	2.0m	TTL	11	1.5	0.0	15	500n	500m	0	7	CA36a	DL8u
41	IH5016CPD		B	5	1	20	2.0m	100	1.5	2.0m	TTL	11	1.5	0.0	15	500n	500m	0	7	CA36a	DL14bi
42	IH5016MDA		B	5	1	20	2.0m	100	1.5	2.0m	TTL	11	1.5	0.0	15	500n	500m	5	C	CA36a	DL8u
43	IH5016MDD		B	5	1	20	2.0m	100	1.5	2.0m	TTL	11	1.5	0.0	15	500n	500m	5	C	CA36a	DL14ah
44	IH5016MPA		B	5	1	20	2.0m	100	1.5	2.0m	TTL	11	1.5	0.0	15	500n	500m	5	C	CA36a	DL8u
45	IH5016MPD		B	5	1	20	2.0m	100	1.5	2.0m	TTL	11	1.5	0.0	15	500n	500m	5	C	CA36a	DL14bi
46	IH5017CPE		B	5	1	20	2.0m	100	1.5	2.0m	TTL	11	1.5	0.0	15	500n	500m	0	7	CA36a	DL14bi
47	IH5018CDA		B	5	1	20	2.0m	100	1.5	2.0m	TTL	11	1.5	0.0	15	500n	500m	0	7	CA36a	DL8u
48	IH5018CDE		B	5	1	20	2.0m	100	1.5	2.0m	TTL	11	1.5	0.0	15	500n	500m	0	7	CA36a	DL14bi
49	IH5018CPD		B	5	1	20	2.0m	100	1.5	2.0m	TTL	11	1.5	0.0	15	500n	500m	0	7	CA36a	DL14bi
50	IH5018CPE		B	5	1	20	2.0m	100	1.5	2.0m	TTL	11	1.5	0.0	15	500n	500m	0	7	CA36a	DL14bi
51	IH5018MDA		B	5	1	20	2.0m	100	1.5	2.0m	TTL	11	1.5	0.0	15	500n	500m	5	C	CA36a	DL8u
52	IH5018MDE		B	5	1	20	2.0m	100	1.5	2.0m	TTL	11	1.5	0.0	15	500n	500m	5	C	CA36a	DL14bi
53	IH5018MPD		B	5	1	20	2.0m	100	1.5	2.0m	TTL	11	1.5	0.0	15	500n	500m	5	C	CA36a	DL14bi
54	IH5018MPE		B	5	1	20	2.0m	100	1.5	2.0m	TTL	11	1.5	0.0	15	500n	500m	5	C	CA36a	DL14bi
55	IH5020CDA		B	5	1	20	2.0m	100	1.5	2.0m	TTL	11	1.5	0.0	15	500n	500m	0	7	CA36a	DL8u
56	IH5020CDD		B	5	1	20	2.0m	100	1.5	2.0m	TTL	11	1.5	0.0	15	500n	500m	0	7	CA36a	DL14ah
57	IH5020CPD		B	5	1	20	2.0m	100	1.5	2.0m	TTL	11	1.5	0.0	15	500n	500m	0	7	CA36a	DL14bi
58	IH5020CPE		B	5	1	20	2.0m	100	1.5	2.0m	TTL	11	1.5	0.0	15	500n	500m	0	7	CA36a	DL14bi
59	IH5020MDA		B	5	1	20	2.0m	100	1.5	2.0m	TTL	11	1.5	0.0	15	500n	500m	5	C	CA36a	DL8u
60	IH5020MDD		B	5	1	20	2.0m	100	1.5	2.0m	TTL	11	1.5	0.0	15	500n	500m	5	C	CA36a	DL14ah
61	IH5020MPD		B	5	1	20	2.0m	100	1.5	2.0m	TTL	11	1.5	0.0	15	500n	500m	5	C	CA36a	DL14bi
62	IH5020MPE		B	5	1	20	2.0m	100	1.5	2.0m	TTL	11	1.5	0.0	15	500n	500m	5	C	CA36a	DL14bi
63	IH5022CDA		B	5	1	20	2.0m	100	1.5	2.0m	TTL	11	1.5	0.0	15	500n	500m	0	7	CA36a	DL8u
64	IH5022CDD		B	5	1	20	2.0m	100	1.5	2.0m	TTL	11	1.5	0.0	15	500n	500m	0	7	CA36a	DL14ah
65	IH5022CDE		B	5	1	20	2.0m	100	1.5	2.0m	TTL	11	1.5	0.0	15	500n	500m	0	7	CA36a	DL14bi
66	IH5022CPD		B	5	1	20	2.0m	100	1.5	2.0m	TTL	11	1.5	0.0	15	500n	500m	0	7	CA36a	DL14bi
67	IH5022CPE		B	5	1	20	2.0m	100	1.5	2.0m	TTL	11	1.5	0.0	15	500n	500m	0	7	CA36a	DL14bi
68	IH5022MDA		B	5	1	20	2.0m	100	1.5	2.0m	TTL	11	1.5	0.0	15	500n	500m	5	C	CA36a	DL8u
69	IH5022MDD		B	5	1	20	2.0m	100	1.5	2.0m	TTL	11	1.5	0.0	15	500n	500m	5	C	CA36a	DL14ah
70	IH5022MDE		B	5	1	20	2.0m	100	1.5	2.0m	TTL	11	1.5	0.0	15	500n	500m	5	C	CA36a	DL14bi
71	IH5022MPD		B	5	1	20	2.0m	100	1.5	2.0m	TTL	11	1.5	0.0	15	500n	500m	5	C	CA36a	DL14bi
72	IH5022MPE		B	5	1	20	2.0m	100	1.5	2.0m	TTL	11	1.5	0.0	15	500n	500m	5	C	CA36a	DL14bi
73	IH5024CDD		B	5	1	20	2.0m	100	1.5	2.0m	TTL	11	1.5	0-0	15	500n	500m	O	7	CA36a	DL14ah
74	IH5024CDE		B	5	1	20	2.0m	100	1.5	2.0m	TTL	11	1.5	0.0	15	500n	500m	0	7	CA36a	DL14bi
75	IH5024CPD		B	5	1	20	2.0m	100	1.5	2.0m	TTL	11	1.5	0-0	15	500n	500m	O	7	CA36a	DL14bi
76	IH5024CPE		B	5	1	20	2.0m	100	1.5	2.0m	TTL	11	1.5	0-0	15	500n	500m	O	7	CA36a	DL14bi
77	IH5024MDA		B	5	1	20	2.0m	100	1.5	2.0m	TTL	11	1.5	0.0	15	500n	500m	5	C	CA36a	DL8u
78	IH5024MDD		B	5	1	20	2.0m	100	1.5	2.0m	TTL	11	1.5	0.0	15	500n	500m	5	C	CA36a	DL14ah
79	IH5024MDE		B	5	1	20	2.0m	100	1.5	2.0m	TTL	11	1.5	0.0	15	500n	500m	5	C	CA36a	DL14bi
80	IH5024MPD		B	5	1	20	2.0m	100	1.5	2.0m	TTL	11	1.5	0.0	15	500n	500m	5	C	CA36a	DL14bi
81	IH5024MPE		B	5	1	20	2.0m	100	1.5	2.0m	TTL	11	1.5	0.0	15	500n	500m	5	C	CA36a	DL14bi
82	ITS7318CDA		B	5	1	20	500p	100	1.5	2.0m	TTL	11	1.5	0.0	15	500n	500m	0	7	CA36a	DL8u
83	ITS7318CDD		B	5	1	20	500p	100	1.5	2.0m	TTL	11	1.5	0.0	15	500n	500m	0	7	CA36a	DL14ah
84	ITS7318CDE		B	5	1	20	500p	100	1.5	2.0m	TTL	11	1.5	0.0	15	500n	500m	0	7	CA36a	DL14bi
85	ITS7318CPA		B	5	1	20	500p	100	1.5	2.0m	TTL	11	1.5	0.0	15	500n	500m	0	7	CA36a	DL8u
86	ITS7318CPD		B	5	1	20	500p	100	1.5	2.0m	TTL	11	1.5	0.0	15	500n	500m	0	7	CA36a	DL14bi
87	ITS7318CPE		B	5	1	20	500p	100	1.5	2.0m	TTL	11	1.5	0.0	15	500n	500m	0	7	CA36a	DL14bi
88	ITS7318MDA		B	5	1	20	500p	100	1.5	2.0m	TTL	11	1.5	0.0	15	500n	500m	5	C	CA36a	DL8u
89	ITS7318MDD		B	5	1	20	500p	100	1.5	2.0m	TTL	11	1.5	0.0	15	500n	500m	5	C	CA36a	DL14ah
90	ITS7318MDE		B	5	1	20	500p	100	1.5	2.0m	TTL	11	1.5	0.0	15	500n	500m	5	C	CA36a	DL14bi
91	ITS7318MPA		B	5	1	20	500p	100	1.5	2.0m	TTL	11	1.5	0.0	15	500n	500m	5	C	CA36a	DL8u
92	ITS7318MPD		B	5	1	20	500p	100	1.5	2.0m	TTL	11	1.5	0.0	15	500n	500m	5	C	CA36a	DL14bi
93	ITS7318MPE		B	5	1	20	500p	100	1.5	2.0m	TTL	11	1.5	0.0	15	500n	500m	5	C	CA36a	DL14bi
94	ITS7320CDA		B	5	1	20	500p	100	1.5	2.0m	TTL	11	1.5	0.0	15	500n	500m	0	7	CA36a	DL8u
95	ITS7320CDD		B	5	1	20	500p	100	1.5	2.0m	TTL	11	1.5	0.0	15	500n	500m	0	7	CA36a	DL14ah
96	ITS7320CDE		B	5	1	20	500p	100	1.5	2.0m	TTL	11	1.5	0.0	15	500n	500m	0	7	CA36a	DL14bi
97	ITS7320CPA		B	5	1	20	500p	100	1.5	2.0m	TTL	11	1.5	0.0	15	500n	500m	0	7	CA36a	DL8u
98	ITS7320CPD		B	5	1	20	500p	100	1.5	2.0m	TTL	11	1.5	0.0	15	500n	500m	0	7	CA36a	DL14bi
99	ITS7320CPE		B	5	1	20	500p	100	1.5	2.0m	TTL	11	1.5	0.0	15	500n	500m	0	7	CA36a	DL14bi
100	ITS7320MDA		B	5	1	20	500p	100	1.5	2.0m	TTL	11	1.5	0.0	15	500n	500m	5	C	CA36a	DL8u
101	ITS7320MDD		B	5	1	20	2.0m	100	1.5	2.0m	TTL	11	1.5	0.0	15	500n	500m	5	1		DL14ah
102	ITS7320MDE		B	5	1	20	500p	100	1.5	2.0m	TTL	11	1.5	0.0	15	500n	500m	0	7	CA36a	DL14bi
103	ITS7320MPA		B	5	1	20	500p	100	1.5	2.0m	TTL	11	1.5	0.0	15	500n	500m	5	C	CA36a	DL8u
104	ITS7320MPD		B	5	1	20	500p	100	1.5	2.0m	TTL	11	1.5	0.0	15	500n	500m	5	C	CA36a	DL14bi
105	ITS7320MPE		B	5	1	20	500p	100	1.5	2.0m	TTL	11	1.5	0.0	15	500n	500m	0	7	CA36a	DL14bi
106	ITS7322CDA		B	5	1	20	500p	100	1.5	2.0m	TTL	11	1.5	0.0	15	500n	500m	0	7	CA36a	DL8u
107	ITS7322CDD		B	5	1	20	500p	100	1.5	2.0m	TTL	11	1.5	0.0	15	500n	500m	0	7	CA36a	DL14ah
108	ITS7322CDE		B	5	1	20	500p	100	1.5	2.0m	TTL	11	1.5	0.0	15	500n	500m	0	7	CA36a	DL14bi
109	ITS7322CPA		B	5	1	20	500p	100	1.5	2.0m	TTL		1.5	0.0	15	500n	500m	0	7	CA36a	DL8u
110	ITS7322CPD		B	5	1	20	500p	100	1.5	2.0m	TTL	11	1.5	0.0	15	500n	500m	0	7	CA36a	DL14bi

SYMBOLS AND CODES EXPLAINED IN INTERPRETER

11. ANALOG GATE SWITCHES BILATERAL,MULTIPLE

IN ORDER OF: (1)TECHN (2)SW FORM (3)SWS/CKT (4)DEV CKTS & (5)TYPE NUMBER

LINE No.	5 TYPE NUMBER	DATA SHT.	2 SF WO R M	3 SWS PER CKT	4 DC EK VT S	MAXIMUM SW VOLT P-P (V)	SW CURR P-P (A)	MAXIMUM DRAIN/ SOURCE ON RESISTANCE RDS (Ω)	° VD (V)	° IS (A)	1 T E C H N	CONTROL LOGIC LEVELS MAX '0' (V)	MIN '1' (V)	RATED PWR SUP SPAN NEG (V)	POS (V)	MAX ON TIME tON (S)	MAX OPER POWER DISS (W)	OPER TEMP RANGE CODE -	+	DRAWINGS LOGIC OR BLOCK	OUTLINE Δ=MO
1	ITS7322CPE		B	5	1	20	500p	100	1.5	2.0m	TTL	11	1.5	0.0	15	500n	500m	0	7	CA36a	DL14bi
2	ITS7322MDA		B	5	1	20	500p	100	1.5	2.0m	TTL	11	1.5	0.0	15	500n	500m	5	C	CA36a	DL8u
3	ITS7322MDD		B	5	1	20	500p	100	1.5	2.0m	TTL	11	1.5	0.0	15	500n	500m	5	C	CA36a	DL14ah
4	ITS7322MDE		B	5	1	20	500p	100	1.5	2.0m	TTL	11	1.5	0.0	15	500n	500m	5	C	CA36a	DL14bi
5	ITS7322MPA		B	5	1	20	2.0m	100	1.5	2.0m	TTL	11	1.5	0.0	15	500n	500m	5	C	CA36a	DL8u
6	ITS7322MPD		B	5	1	20	500p	100	1.5	2.0m	TTL	11	1.5	0.0	15	500n	500m	5	C	CA36a	DL14bi
7	ITS7322MPE		B	5	1	20	500p	100	1.5	2.0m	TTL	11	1.5	0.0	15	500n	500m	5	C	CA36a	DL14bi
8	ITS7324CDA		B	5	1	20	500p	100	1.5	2.0m	TTL	11	1.5	0.0	15	500n	500m	0	7	CA36a	DL8u
9	ITS7324CDD		B	5	1	20	500p	100	1.5	2.0m	TTL	11	1.5	0.0	15	500n	500m	0	7	CA36a	DL14ah
10	ITS7324CDE		B	5	1	20	500p	100	1.5	2.0m	TTL	11	1.5	0.0	15	500n	500m	0	7	CA36a	DL14bi
11	ITS7324CPA		B	5	1	20	500p	100	1.5	2.0m	TTL	11	1.5	0.0	15	500n	500m	0	7	CA36a	DL8u
12	ITS7324CPD		B	5	1	20	500p	100	1.5	2.0m	TTL	11	1.5	0.0	15	500n	500m	0	7	CA36a	DL14bi
13	ITS7324CPE		B	5	1	20	500p	100	1.5	2.0m	TTL	11	1.5	0.0	15	500n	500m	0	7	CA36a	DL14bi
14	ITS7324MDA		B	5	1	20	2.0m	100	1.5	2.0m	TTL	11	1.5	0.0	15	500n	500m	5	C	CA36a	DL8u
15	ITS7324MDD		B	5	1	20	500p	100	1.5	2.0m	TTL	11	1.5	0.0	15	500n	500m	5	C	CA36a	DL14ah
16	ITS7324MDE		B	5	1	20	500p	100	1.5	2.0m	TTL	11	1.5	0.0	15	500n	500m	5	C	CA36a	DL14bi
17	ITS7324MPA		B	5	1	20	2.0m	100	1.5	2.0m	TTL	11	1.5	0.0	15	500n	500m	5	C	CA36a	DL8u
18	ITS7324MPD		B	5	1	20	500p	100	1.5	2.0m	TTL	11	1.5	0.0	15	500n	500m	5	C	CA36a	DL14bi
19	ITS7324MPE		B	5	1	20	500p	100	1.5	2.0m	TTL	11	1.5	0.0	15	500n	500m	5	C	CA36a	DL14bi
20	ITS7326CDA		B	5	1	20	500p	100	1.5	2.0m	TTL	11	1.5	0.0	15	500n	500m	0	7	CA36a	DL8u
21	ITS7326CDD		B	5	1	20	500p	100	1.5	2.0m	TTL	11	1.5	0.0	15	500n	500m	0	7	CA36a	DL14ah
22	ITS7326CDE		B	5	1	20	500p	100	1.5	2.0m	TTL	11	1.5	0.0	15	500n	500m	0	7	CA36a	DL14bi
23	ITS7326CPA		B	5	1	20	500p	100	1.5	2.0m	TTL	11	1.5	0.0	15	500n	500m	0	7	CA36a	DL8u
24	ITS7326CPD		B	5	1	20	500p	100	1.5	2.0m	TTL	11	1.5	0.0	15	500n	500m	0	7	CA36a	DL14bi
25	ITS7326CPE		B	5	1	20	500p	100	1.5	2.0m	TTL	11	1.5	0.0	15	500n	500m	0	7	CA36a	DL14bi
26	ITS7326MDA		B	5	1	20	500p	100	1.5	2.0m	TTL	11	1.5	0.0	15	500n	500m	5	C	CA36a	DL8u
27	ITS7326MDD		B	5	1	20	500p	100	1.5	2.0m	TTL	11	1.5	0.0	15	500n	500m	5	C	CA36a	DL14ah
28	ITS7326MDE		B	5	1	20	500p	100	1.5	2.0m	TTL	11	1.5	0.0	15	500n	500m	5	C	CA36a	DL14bi
29	ITS7326MPA		B	5	1	20	500p	100	1.5	2.0m	TTL	11	1.5	0.0	15	500n	500m	5	C	CA36a	DL8u
30	ITS7326MPD		B	5	1	20	500p	100	1.5	2.0m	TTL	11	1.5	0.0	15	500n	500m	5	C	CA36a	DL14bi
31	ITS7326MPE		B	5	1	20	500p	100	1.5	2.0m	TTL	11	1.5	0.0	15	500n	500m	5	C	CA36a	DL14bi
32	ITS7328CDA		B	5	1	20	500p	100	1.5	2.0m	TTL	11	1.5	0.0	15	500n	500m	0	7	CA36a	DL8u
33	ITS7328CDD		B	5	1	20	500p	100	1.5	2.0m	TTL	11	1.5	0.0	15	500n	500m	0	7	CA36a	DL14ah
34	ITS7328CDE		B	5	1	20	500p	100	1.5	2.0m	TTL	11	1.5		15	500n	500m	0	7	CA36a	DL14bi
35	ITS7328CPA		B	5	1	20	500p	100	1.5	2.0m	TTL	11	1.5	0.0	15	500n	500m	0	7	CA36a	DL8u
36	ITS7328CPD		B	5	1	20	500p	100	1.5	2.0m	TTL	11	1.5	0.0	15	500n	500m	0	7	CA36a	DL14bi
37	ITS7328CPE		B	5	1	20	500p	100	1.5	2.0m	TTL	11	1.5	0.0	15	500n	500m	0	7	CA36a	DL14bi
38	ITS7328MDA		B	5	1	20	500p	100	1.5	2.0m	TTL	11	1.5		15	500n	500m	5	C	CA36a	DL8u
39	ITS7328MDD		B	5	1	20	500p	100	1.5	2.0m	TTL	11	1.5		15	500n	500m	5	C	CA36a	DL14ah
40	ITS7328MDE		B	5	1	20	500p	100	1.5	2.0m	TTL	11	1.5		15	500n	500m	5	C	CA36a	DL14bi
41	ITS7328MPA		B	5	1	20	500p	100	1.5	2.0m	TTL	11	1.5		15	500n	500m	5	C	CA36a	DL8u
42	ITS7328MPD		B	5	1	20	500p	100	1.5	2.0m	TTL	11	1.5		15	500n	500m	5	C	CA36a	DL14bi
43	ITS7328MPE		B	5	1	20	500p	100	1.5	2.0m	TTL	11	1.5		15	500n	500m	5	C	CA36a	DL14bi
44	ITS7330CDA		B	5	1	20	500p	100	1.5	2.0m	TTL	11	1.5	0.0	15	500n	500m	0	7	CA36a	DL8u
45	ITS7330CDD		B	5	1	20	500p	100	1.5	2.0m	TTL	11	1.5	0.0	15	500n	500m	0	7	CA36a	DL14ah
46	ITS7330CDE		B	5	1	20	500p	100	1.5	2.0m	TTL	11	1.5	0.0	15	500n	500m	0	7	CA36a	DL14bi
47	ITS7330CPA		B	5	1	20	500p	100	1.5	2.0m	TTL	11	1.5	0.0	15	500n	500m	0	7	CA36a	DL8u
48	ITS7330CPD		B	5	1	20	500p	100	1.5	2.0m	TTL	11	1.5	0.0	15	500n	500m	0	7	CA36a	DL14bi
49	ITS7330CPE		B	5	1	20	500p	100	1.5	2.0m	TTL	11	1.5	0.0	15	500n	500m	0	7	CA36a	DL14bi
50	ITS7330MDA		B	5	1	20	500p	100	1.5	2.0m	TTL	11	1.5	0.0	15	500n	500m	5	C	CA36a	DL8u
51	ITS7330MDD		B	5	1	20	500p	100	1.5	2.0m	TTL	11	1.5	0.0	15	500n	500m	5	C	CA36a	DL14ah
52	ITS7330MDE		B	5	1	20	500p	100	1.5	2.0m	TTL	11	1.5	0.0	15	500n	500m	5	C	CA36a	DL14bi
53	ITS7330MPA		B	5	1	20	500p	100	1.5	2.0m	TTL	11	1.5	0.0	15	500n	500m	5	C	CA36a	DL8u
54	ITS7330MPD		B	5	1	20	500p	100	1.5	2.0m	TTL	11	1.5	0.0	15	500n	500m	5	C	CA36a	DL14bi
55	ITS7330MPE		B	5	1	20	500p	100	1.5	2.0m	TTL	11	1.5	0.0	15	500n	500m	5	C	CA36a	DL14bi
56	ITS7332CDA		B	5	1	20	500p	100	1.5	2.0m	TTL	11	1.5	0.0	15	500n	500m	0	7	CA36a	DL8u
57	ITS7332CDD		B	5	1	20	500p	100	1.5	2.0m	TTL	11	1.5	0.0	15	500n	500m	0	7	CA36a	DL14ah
58	ITS7332CDE		B	5	1	20	500p	100	1.5	2.0m	TTL	11	1.5	0.0	15	500n	500m	0	7	CA36a	DL14bi
59	ITS7332CPA		B	5	1	20	500p	100	1.5	2.0m	TTL	11	1.5	0.0	15	500n	500m	0	7	CA36a	DL8u
60	ITS7332CPD		B	5	1	20	500p	100	1.5	2.0m	TTL	11	1.5	0.0	15	500n	500m	0	7	CA36a	DL14bi
61	ITS7332CPE		B	5	1	20	500p	100	1.5	2.0m	TTL	11	1.5	0.0	15	500n	500m	0	7	CA36a	DL14bi
62	ITS7332MDA		B	5	1	20	500p	100	1.5	2.0m	TTL	11	1.5	0.0	15	500n	500m	5	C	CA36a	DL8u
63	ITS7332MDD		B	5	1	20	500p	100	1.5	2.0m	TTL	11	1.5	0.0	15	500n	500m	5	C	CA36a	DL14ah
64	ITS7332MDE		B	5	1	20	500p	100	1.5	2.0m	TTL	11	1.5	0.0	15	500n	500m	5	C	CA36a	DL14bi
65	ITS7332MPA		B	5	1	20	500p	100	1.5	2.0m	TTL	11	1.5	0.0	15	500n	500m	5	C	CA36a	DL8u
66	ITS7332MPD		B	5	1	20	500p	100	1.5	2.0m	TTL	11	1.5	0.0	15	500n	500m	5	C	CA36a	DL14bi
67	ITS7332MPE		B	5	1	20	500p	100	1.5	2.0m	TTL	11	1.5	0.0	15	500n	500m	5	C	CA36a	DL14bi
68	ITS7334CDA		B	5	1	20	2.0m	100	1.5	2.0m	TTL	11	1.5	0.0	15	500n	500m	0	7		DL8u
69	ITS7334CDD		B	5	1	20	500p	100	1.5	2.0m	TTL	11	1.5	0.0	15	500n	500m	0	7	CA36a	DL14ah
70	ITS7334CDE		B	5	1	20	500p	100	1.5	2.0m	TTL	11	1.5	0.0	15	500n	500m	0	7	CA36a	DL14bi
71	ITS7334CPA		B	5	1	20	500p	100	1.5	2.0m	TTL	11	1.5	0.0	15	500n	500m	0	7	CA36a	DL8u
72	ITS7334CPD		B	5	1	20	500p	100	1.5	2.0m	TTL	11	1.5	0.0	15	500n	500m	0	7	CA36a	DL14bi
73	ITS7334CPE		B	5	1	20	500p	100	1.5	2.0m	TTL	11	1.5	0-0	15	500n	500m	0	7	CA36a	DL14bi
74	ITS7334MDA		B	5	1	20	500p	100	1.5	2.0m	TTL	11	1.5	0.0	15	500n	500m	5	C	CA36a	DL8u
75	ITS7334MDD		B	5	1	20	500p	100	1.5	2.0m	TTL	11	1.5	0.0	15	500n	500m	5	C	CA36a	DL14ah
76	ITS7334MDE		B	5	1	20	500p	100	1.5	2.0m	TTL	11	1.5	0.0	15	500n	500m	5	C	CA36a	DL14bi
77	ITS7334MPA		B	5	1	20	500p	100	1.5	2.0m	TTL	11	1.5	0.0	15	500n	500m	5	C	CA36a	DL8u
78	ITS7334MPD		B	5	1	20	500p	100	1.5	2.0m	TTL	11	1.5	0.0	15	500n	500m	5	C	CA36a	DL14bi
79	ITS7334MPE		B	5	1	20	500p	100	1.5	2.0m	TTL	11	1.5	0.0	15	500n	500m	5	C	CA36a	DL14bi
80	ITS7336CDA		B	5	1	20	500p	100	1.5	2.0m	TTL	11	1.5	0.0	15	500n	500m	0	7	CA36a	DL8u
81	ITS7336CDD		B	5	1	20	500p	100	1.5	2.0m	TTL	11	1.5	0.0	15	500n	500m	0	7	CA36a	D14-D30
82	ITS7336CDE		B	5	1	20	500p	100	1.5	2.0m	TTL	11	1.5	0.0	15	500n	500m	0	7	CA36a	DL14bi
83	ITS7336CPA		B	5	1	20	500p	100	1.5	2.0m	TTL	11	1.5	0.0	15	500n	500m	0	7	CA36a	DL8u
84	ITS7336CPD		B	5	1	20	500p	100	1.5	2.0m	TTL	11	1.5	0.0	15	500n	500m	0	7	CA36a	DL14bi
85	ITS7336CPE		B	5	1	20	500p	100	1.5	2.0m	TTL	11	1.5	0.0	15	500n	500m	0	7	CA36a	DL14bi
86	ITS7336MDA		B	5	1	20	500p	100	1.5	2.0m	TTL	11	1.5	0.0	15	500n	500m	5	C	CA36a	DL8u
87	ITS7336MDD		B	5	1	20	500p	100	1.5	2.0m	TTL	11	1.5	0.0	15	500n	500m	5	C	CA36a	DL14ah
88	ITS7336MDE		B	5	1	20	500p	100	1.5	2.0m	TTL	11	1.5	0.0	15	500n	500m	5	C	CA36a	DL14bi
89	ITS7336MPA		B	5	1	20	500p	100	1.5	2.0m	TTL	11	1.5	0.0	15	500n	500m	5	C	CA36a	DL8u
90	ITS7336MPD		B	5	1	20	500p	100	1.5	2.0m	TTL	11	1.5	0.0	15	500n	500m	5	C	CA36a	DL14bi
91	ITS7336MPE		B	5	1	20	500p	100	1.5	2.0m	TTL	11	1.5	0.0	15	500n	500m	5	C	CA36a	DL14bi
92	ITS7338CDA		B	5	1	20	500p	100	1.5	2.0m	TTL	11	1.5	0.0	15	500n	500m	0	7	CA36a	DL14bi
93	ITS7338CDD		B	5	1	20	500p	100	1.5	2.0m	TTL	11	1.5	0.0	15	500n	500m	0	7	CA36a	DL14bi
94	ITS7338CDE		B	5	1	20	500p	100	1.5	2.0m	TTL	11	1.5	0.0	15	500n	500m	0	7	CA36a	DL14bi
95	ITS7338CPA		B	5	1	20	500p	100	1.5	2.0m	TTL	11	1.5	0.0	15	500n	500m	0	7	CA36a	DL8u
96	ITS7338CPD		B	5	1	20	500p	100	1.5	2.0m	TTL	11	1.5	0.0	15	500n	500m	0	7	CA36a	DL14ah
97	ITS7338CPE		B	5	1	20	500p	100	1.5	2.0m	TTL	11	1.5	0.0	15	500n	500m	0	7	CA36a	DL14bi
98	ITS7338MDA		B	5	1	20	500p	100	1.5	2.0m	TTL	11	1.5	0.0	15	500n	500m	5	C	CA36a	DL8u
99	ITS7338MDD		B	5	1	20	500p	100	1.5	2.0m	TTL	11	1.5	0.0	15	500n	500m	5	C	CA36a	DL14ah
100	ITS7338MDE		B	5	1	20	500p	100	1.5	2.0m	TTL	11	1.5	0.0	15	500n	500m	5	C	CA36a	DL14bi
101	ITS7338MPA		B	5	1	20	500p	100	1.5	2.0m	TTL	11	1.5	0.0	15	500n	500m	5	C	CA36a	DL8u
102	ITS7338MPD		B	5	1	20	500p	100	1.5	2.0m	TTL	11	1.5	0.0	15	500n	500m	5	C	CA36a	DL14bi
103	ITS7338MPE		B	5	1	20	500p	100	1.5	2.0m	TTL	11	1.5	0.0	15	500n	500m	5	C	CA36a	DL14bi
104	ITS7340CDA		B	5	1	20	500p	100	1.5	2.0m	TTL	11	1.5	0.0	15	500n	500m	0	7	CA36a	DL8u
105	ITS7340CDD		B	5	1	20	500p	100	1.5	2.0m	TTL	11	1.5	0.0	15	500n	500m	0	7	CA36a	DL14ah
106	ITS7340CDE		B	5	1	20	500p	100	1.5	2.0m	TTL	11	1.5	0.0	15	500n	500m	0	7	CA36a	DL14bi
107	ITS7340CPA		B	5	1	20	500p	100	1.5	2.0m	TTL	11	1.5	0.0	15	500n	500m	0	7	CA36a	DL8u
108	ITS7340CPD		B	5	1	20	500p	100	1.5	2.0m	TTL	11	1.5	0.0	15	500n	500m	0	7	CA36a	DL14bi
109	ITS7340CPE		B	5	1	20	500p	100	1.5	2.0m	TTL	11	1.5	0.0	15	500n	500m	0	7	CA36a	DL14bi
110	ITS7340MDA		B	5	1	20	500p	100	1.5	2.0m	TTL	11	1.5	0.0	15	500n	500m	5	C	CA36a	DL8u

SYMBOLS AND CODES EXPLAINED IN INTERPRETER

11. ANALOG GATE SWITCHES BILATERAL,MULTIPLE

IN ORDER OF: (1)TECHN (2)SW FORM (3)SWS/CKT (4)DEV CKTS & (5)TYPE NUMBER

LINE No.	5 TYPE NUMBER	DATA SHT.	2 SF WO R M	3 SWS PER CKT	4 DC EK VT S	MAXIMUM SW VOLT P-P (V)	MAXIMUM SW CURR P-P (A)	MAXIMUM DRAIN/ SOURCE ON RESISTANCE RDS (Ω)	° VD (V)	° IS (A)	1 T E C H N	CONTROL LOGIC LEVELS MAX '0' (V)	MIN '1' (V)	RATED PWR SUP SPAN NEG (V)	POS (V)	MAX ON TIME tON (S)	MAX OPER POWER DISS (W)	OPER TEMP RANGE CODE -	+	DRAWINGS LOGIC OR BLOCK	OUTLINE Δ=MO
1	ITS7340MDD		B	5	1	20	500p	100	1.5	2.0m	TTL	11	1.5	0.0	15	500n	500m	5	C	CA36a	DL14ah
2	ITS7340MDE		B	5	1	20	500p	100	1.5	2.0m	TTL	11	1.5	0.0	15	500n	500m	5	C	CA36a	DL14bi
3	ITS7340MPA		B	5	1	20	500p	100	1.5	2.0m	TTL	11	1.5	0.0	15	500n	500m	5	C	CA36a	DL8u
4	ITS7340MPD		B	5	1	20	500p	100	1.5	2.0m	TTL	11	1.5	0.0	15	500n	500m	5	C	CA36a	DL14bi
5	ITS7340MPE		B	5	1	20	500p	100	1.5	2.0m	TTL	11	1.5	0.0	15	500n	500m	5	C	CA36a	DL14bi
6	SH3002HC		C	1	1	20	10m	200		100u	TTL	1.1	1.9	22	11	400n	231m	0	7	CA50	TO100
7	SH3002HM		C	1	1	20	10m	200		100u	TTL	1.1	1.9	22	11	350n	231m	5	C	CA50	TO100

12. ANALOG MULTIPLEXERS

IN ORDER OF: (1)TECHN (2)SW FORM (3)SWS/CKT (4)DEV CKTS & (5)TYPE NUMBER

LINE No.	5 TYPE NUMBER	DATA SHT.	2 DC EK VT S	3 CI KN TP S	4 MAXIMUM SW VOLT P-P (V)	MAXIMUM SW CURR P-P (A)	MAXIMUM DRAIN/SOURCE ON RESISTANCE RDS (Ω)	° VD (V)	° IS (A)	1 TECHN	CONTROL LOGIC LEVELS MAX '0' (V)	MIN '1' (V)	RATED PWR SUPPLY SPANS NEG (V)	POS (V)	MAX PROP DELAY tpd (S)	MAX OPER POWER DISS (W)	OPER TEMP RANGE CODE -	+	DRAWINGS LOGIC OR BLOCK	OUTLINE Δ=MO
1	LF12508D		1	8	36	10m	650	0.0	100u		.70	2.0	15	15	1.8u	255m	2	8	CB9	DL16dk
2	AY5-1016		1	16			500	12	300k♦		.80	3.5	12	5.0	300n	600m	0	7	CB66	DL40d
3	AY6-4016		1	16			500	12	300k♦		.80	3.5	12	5.0	300n	600m	5	C	CB66	DL40d
4	LF12509D		4	2	36	10m	650	0.0	100u		.70	2.0	15	15	1.8u	255m	2	8	CB9a	DL16dk
5	MUX88AQ		1	8	22	25m	260	0.0	100u	BFT	.80	2.0	15	15	1.3u	237m	5	C	CB9	DL16bt
6	MUX88BQ		1	8	22	25m	370	0.0	100u	BFT	.80	2.0	15	15	2.1u	165m	5	C	CB9	DL16bt
7	MUX86ET		1	16		25m	540	0.0	100u	BFT	.80	2.0	15	15			2	8	CB59b	DL28ai
8	MUX86FT		1	16		25m	800	0.0	100u	BFT	.80	2.0	15	15			2	8	CB59b	DL28ai
9	HI3-509A-5		1	4	30		1.8k	10	100u	CMS	.80	4.0	15	15	500n	7.5m	0	7	CB9a	DL16dv
10	HI3-1828A-5		1	4	30		400	10	1.0m	CMS	.40	4.0	15	15	350n	5.0m	0	7	CB22	DL16dv
11	MU6208C		1	4	64		400	10	-1m	CMS	.80	2.4	15	15		1.2	0	7	CB9a	DL16bi
12	MU6208M		1	4	64		400	10	-1m	CMS	.80	2.4	15	15	1.5u	1.2	5	C	CB9a	DL16x
13	MB84051		1	8						CMS			0.0	10		200m	5	C	CB49	DL16r
14	MB84051M		1	8						CMS			0.0	10		200m	4	8	CB49	DL16q
15	HEF4051P		1	8	15		65	10		CMS	3.0	7.0	0.0	10	7.0n	14m	4	8	CB49	DL16h
16	MS504#1		1	8	16	15m	100	15		CMS	3.2	12.8	0.0	16		15u	5	C	CB29	DLØ
17	MS504#2		1	8	16	15m	100	15		CMS	3.2	12.8	0.0	16		15u	5	C	CB29	FPØ
18	MS504#3		1	8	16	15m	100	15		CMS	3.2	12.8	0.0	16		15u	5	C	CB29	DLØ
19	MS504#4		1	8	16	15m	100	15		CMS	3.2	12.8	0.0	16		15u	5	C	CB29	FPØ
20	TP4051BN		1	8	18					CMS	4.0	11.0	0.0	15		1.2m	4	8		DL16ac
21	DG508BL		1	8	30	20m	450	10	200u	CMS	.80	2.4	15	15	600n	750m	2	8	CB9	FP17
22	HI3-507-5		1	8	30		400	10	1.0m	CMS	.80	2.4	15	15	300n	105m	0	7	CB9e	DL28Ø
23	HI3-507A-5		1	8	30		1.8k	10	100u	CMS	.80	4.0	15	15	500n	7.5m	0	7	CB9c	DL28Ø
24	HI3-508A-5		1	8	30		1.8k	10	100u	CMS	.80	4.0	15	15	500n	7.5m	0	7	CB9	DL16dv
25	HI3-1818A-5		1	8	30		400	10	1.0m	CMS	.40	4.0	15	15	350n	5.0m	0	7	CB21	DL16dv
26	MUX202-M/B		1	8	30		1.5k	10	100u	CMS	.80	4.0	15	15	4.0u	37m	5	C	CB9	DL16bq
27	MUX202-M/C		1	8	30		1.5k	10	100u	CMS	.80	4.0	15	15	4.0u	37m	5	C	CB9	DL16bq
28	MUX203		1	8	30		1.8k	10	100u	CMS	.80	4.0	15	15	4.0u	37m	0	7	CB9	DL16bq
29	MU6108C		1	8	64		400	10	-1m	CMS	.80	2.4	15	15		1.2	0	7	CB9	DL16bi
30	MU6108M		1	8	64		400	10	-1m	CMS	.80	2.4	15	15	1.5u	1.2	5	C	CB9	DL16x
31	MU6216C		1	8	64		700	10	-1m	CMS	.80	3.0	15	15		1.2	0	7	CB48a	DL28am
32	MU6216M		1	8	64		700	10	-1m	CMS	.80	3.0	15	15	1.5u	1.2	5	C	CB48a	DL28ag
33	MK5160N		1	16			3.0k			CMS	1.5	3.5	0.0	5.0	2.5u	500m	0	7	CB72	DL40t
34	MK50816N-1#2		1	16			3.0k			CMS	1.5	3.5	0.0	5.0		500m	4	8	BA186a	DL40t
35	MK50816N#2		1	16			3.0k			CMS	1.5	3.5	0.0	5.0		500m	0	7	BA186a	DL40i
36	MK50816P-1#2		1	16			3.0k			CMS	1.5	3.5	0.0	5.0		500m	4	8	BA186a	DL40t
37	MK50816P#2		1	16			3.0k			CMS	1.5	3.5	0.0	5.0		500m	0	7	BA186a	DL40i
38	CD4067BK		1	16	15	25m	280	15		CMS	4.0	11	0.0	15	190n	300u	5	C	CB52	F24-7
39	HEF4067P		1	16	15		120	10		CMS	3.0	7.0	0.0	10	7.0n	14m	4	8	CB52	D24-4c
40	HI3-506-5		1	16	30		400	10	1.0m	CMS	.80	2.4	15	15	300n	105m	0	7	CB14	DL28Ø
41	HI3-506A-5		1	16	30		1.8k	10	100u	CMS	.80	4.0	15	15	500n	7.5m	0	7	CB14	DL28Ø
42	MUX204		1	16	30		1.8k	10	100u	CMS	.80	4.0	15	15	4.0u	105m	0	7	CB9b	DL28a
43	MU6116C		1	16	64		700	10	-1m	CMS	.80	3.0	15	15		1.2	0	7	CB47a	DL28am
44	MU6116M		1	16	64		700	10	-1m	CMS	.80	3.0	15	15	1.5u	1.2	5	C	CB47a	DL28ag
45	MB84052		2	4						CMS			0.0	10		200m	5	C	CB50	DL16r
46	MB84052M		2	4						CMS			0.0	10		200m	4	8	CB50	DL16q
47	HEF4052P		2	4	15		65	10		CMS	3.0	7.0	0.0	10	7.0n	14m	4	8	CB50	DL16h
48	TP4052BN		2	4	18					CMS	4.0	11.0	0.0	15		1.2m	4	8		DL16ac
49	DG509BL		2	4	30	20m	450	10	200u	CMS	.80	2.4	15	15	600n	750m	2	8	CB9a	FP17
50	HI518-2		2	4	30		750	10	-.1	CMS	0.8	2.4	15	15		450m	5	C	CB73a	DL18y
51	HI518-5		2	4	30		750	10	-.1	CMS	0.8	2.4	15	15		540m	0	7	CB73a	DL18y
52	CD4097BK		2	8	15	25m	280	15		CMS	4.0	11	0.0	15	190n	300u	5	C	CB56	F24-7
53	4551		2	8	30	10m				CMS	.80	6.0	15	15	500n	1.2	0	7	CB9c	DL28q
54	4551-01		2	8	30	10m				CMS	.80	6.0	15	15	500n	1.2	5	C	CB9c	DL28q
55	HI516-2		2	8	30		750	10	-.1	CMS	.80	2.4	15	15		525m	5	C	CB75	DL28m
56	HI516-5		2	8	30		750	10	-.1	CMS	.80	2.4	15	15		525m	0	7	CB75	DL28m
57	IH5070CDI		2	8	30	30m	450	10	10m	CMS	.80	3.0	15	15	1.5u	1.2	0	7	CB48	DL28ae
58	IH5070MDI		2	8	30	30m	400	10	10m	CMS	.80	3.0	15	15	1.5u	1.2	5	C	CB48	DL28ae
59	MB84053		3	2						CMS			0.0	10		200m	5	C	CB51	DL16r
60	MB84053M		3	2						CMS			0.0	10		200m	4	8	CB51	DL16q
61	HEF4053P		3	2	15		120	10		CMS	3.0	7.0	0.0	10	7.0n	14m	4	8	CB51	DL16h
62	TP4053BN		3	2	18					CMS	4.0	11.0	0.0	15		1.2m	4	8		DL16ac
63	SCL4053BF		3	4	15		280	15	10k♦	CMS	4.0	11	0.0	15	25n	300m	5	C	CB51	F16-12
64	SCL4052BF		4	2	15		280	15	10k♦	CMS	4.0	11	0.0	15	25n	300m	5	C	CB50	F16-12
65	SCL4051BF		8	1	15		280	15	10k♦	CMS	4.0	11	0.0	15	25n	300m	5	C	CB49	F16-12
66	MUX1600		1	18	6.0	20u	600			HyB	0.8	2.2	0.0	12		96m	0	7	CB74	DL28a
67	SI3705143P		1	8	5.0	20m	150	5.0	1.0m	PMS	.60	3.5	20	5.0	1.2u	900m	5	8	CB37	DL16dc
68	SI3705193P		1	8	5.0	20m	150	5.0	1.0m	PMS	.60	3.5	20	5.0	1.2u	900m	0	7	CB37	DL16dc
69	SFF160K		1	8	10		300	-15	100u	PMS	2.8	3.0	24	7.0		175m	0	7	CB19	D16-13a
70	SFF160KM		1	8	10		300	-15	100u	PMS	2.8	3.0	24	7.0		175m	5	C	CB19	D16-13a
71	SFF160KT		1	8	10		300	-15	100u	PMS	2.8	3.0	24	7.0		175m	2	8	CB19	D16-13a
72	SI3705142P		1	8	10	20m	400	-5.0	1.0m	PMS	.60	3.5	20	5.0	1.2u	900m	5	8	CB37	DL16dc
73	HS9-1000		1	16	20		1.2k	8.0		TTL	.50	2.0	15	5.0	2.0u	200m	5	C	CB10	F28-1

SYMBOLS AND CODES EXPLAINED IN INTERPRETER

13. DIGITAL MULTIPLEXERS/SELECTORS

IN ORDER OF: (1)TECHN (2)CKT/DEV (3)INP/CKT
(4)MIN OUTPUT SINK CURRENT & (5)TYPE NUMBER

LINE No.	5 TYPE NUMBER	DATA SHT.	2 CKT PER DEV	3 INP PER CKT	NO OF ADDR. LINES	1 TECHN	4 MIN OUTPUT SINK CURRENT (A)	° OUT (V)	INPUT LOGIC LEVELS MAX '0' (V)	MIN '1' (V)	RATED PWR SUPPLY SPAN NEG (V)	POS (V)	MAX PROP DELAY tpd (S)	MAX OPER POWER DISS (W)	OPER TEMP RANGE CODE -	+	DRAWINGS LOGIC OR BLOCK	OUTLINE Δ=MO
1	5566		3	8	2		16m	.40	.90	2.0	0.0	5.0	25n	425m	0	7	CC42	PC12
2	5567		6	4	2		14m	.40	.90	2.0	0.0	5.0	32n	425m	0	7	CC43	PC12
3	CD4512BK		1	8	3	CMS	3.4m	1.5	4.0	11	0.0	15	110n	300u	5	C	CC77	Δ004AG
4	SCL4512BF		1	8	3	CMS	3.4m	1.5	4.0	11	0.0	15	160n	300m	5	C	CC77	F16-12
5	HEF4019P		4	2	2	CMS	2.0m	.50	3.0	7.0	0.0	10	55n	400m	4	8	CC52	DL16h
6	HEF4519P		4	2	2	CMS	2.0m	.50	3.0	7.0	0.0	10	30n	400m	4	8	CC53	DL16h
7	CD40257BY		4	2	1	CMS	6.0m	1.5	0.0	15	0.0	15	50n	500m	4	8	74S257N	Δ001AC
8	350BL		1	8	3	DTL	16m	1.5	5.0	6.5	0.0	12	450n	396m	5	C	CC1	DL16c
9	350CJ		1	8	3	DTL	16m	1.5	5.0	6.5	0.0	12	450n	396m	3	8	CC1	DL16b
10	350AJ		1	8	3	DTL	20m	1.8	5.0	6.5	0.0	15	450n	600m	3	7	CC1	DL16b
11	350ML		1	8	3	DTL	20m	1.8	5.0	6.5	0.0	15	450n	600m	5	C	CC1	DL16c
12	351BL		2	4	2	DTL	16m	1.5	5.0	6.5	0.0	12	500n	396m	5	C	3-51C	DL16c
13	351AJ		2	4	2	DTL	20m	1.8	5.0	6.5	0.0	15	500n	600m	3	7	3-51C	DL16b
14	351ML		2	4	2	DTL	20m	1.8	5.0	6.5	0.0	15	500n	600m	5	C	3-51C	DL16c
15	10164FC		1	8	3	ECL	20m	-.96	-1.4	-1.1	5.2	0.0	6.0n	390m	0	7	CC61	F16-3
16	10164PC		1	8	3	ECL	20m	-.96	-1.4	-1.1	5.2	0.0	6.0n	390m	0	7	CC61	DL16ak
17	HD21S164		1	16	4	ECL			-1.8	-.88	4.5	0.0	3.2n		0	8		
18	100164DC		1	16	4	ECL	18m	-1.1	-1.4	-1.1	4.5	0.0	3.2n	441m	0	7	CC64	DL24f
19	100164FC		1	16	4	ECL	18m	-1.1	-1.4	-1.1	4.5	0.0	3.2n	441m	0	7	CC64	F24-8
20	10134FC		2	2	2	ECL	20m	-.96	-1.4	-1.1	5.2	0.0	5.7n	286m	0	7	CC18	F16-3
21	10134PC		2	2	2	ECL	20m	-.96	-1.4	-1.1	5.2	0.0	5.7n	286m	0	7	CC18	DL16ak
22	MC10532F		2	2	1	ECL	20m	-.96	-1.4	-1.1	5.2	0.0	4.6n	286m	5	C	CC17	F16-11
23	MC10532L		2	2	1	ECL	20m	-.96	-1.4	-1.1	5.2	0.0	4.6n	286m	5	C	CC17	DL16au
24	MC10534F		2	2	2	ECL	20m	-.96	-1.4	-1.1	5.2	0.0	4.6n	286m	5	C	CC18	F16-11
25	MC10534L		2	2	2	ECL	20m	-.96	-1.4	-1.1	5.2	0.0	4.6n	286m	5	C	CC18	DL16au
26	MC1028P		2	4	2	ECL	2.5m	-.70	-1.3	-1.0	5.2	0.0	9.0n	170m	0	7	CC51	DL16ad
27	MC1228F		2	4	2	ECL	2.5m	.70	-1.3	-1.0	5.2	0.0	9.0n	170m	5	C	CC51	F16-11
28	MC1228L		2	4	2	ECL	2.5m	-.70	-1.3	-1.0	5.2	0.0	9.0n	170m	5	C	CC51	DL16at
29	10174FC		2	4	2	ECL	20m	-.96	-1.4	-1.1	5.2	0.0	6.0n	260m	0	7	CC62	F16-3
30	10174PC		2	4	2	ECL	20m	-.96	-1.4	-1.1	5.2	0.0	6.0n	260m	0	7	CC62	DL16ak
31	HD21S163		2	8	3	ECL			-1.8	-.88	4.5	0.0	2.6n		0	8		
32	100163DC		2	8	3	ECL	18m	-1.1	-1.4	-1.1	4.5	0.0	2.6n	688m	0	7	CC63	DL24f
33	100163FC		2	8	3	ECL	18m	-1.1	-1.4	-1.1	4.5	0.0	2.6n	688m	0	7	CC63	F24-8
34	HD21S171		3	4	2	ECL			-1.8	-.88	4.5	0.0	2.6n		0	8		
35	100171DC		3	4	2	ECL	18m	-1.1	-1.4	-1.1	4.5	0.0	2.6n	513m	0	7	CC65	DL24f
36	100171FC		3	4	2	ECL	18m	-1.1	-1.4	-1.1	4.5	0.0	2.6n	513m	0	7	CC65	F24-8
37	MC10559F		4	2	1	ECL			-1.4	-1.1	5.2	0.0	3.2n	275m	5	C	CC50	F16-11
38	MC10559L		4	2	1	ECL			-1.4	-1.1	5.2	0.0	3.2n	275m	5	C	CC50	DL16au
39	10173FC		4	2	1	ECL	24m	.81	-1.4	-1.1	5.2	0.0	5.2n	343m	0	7	CC75	F16-3
40	10173PC		4	2	1	ECL	24m	.81	-1.4	-1.1	5.2	0.0	5.2n	343m	0	7	CC75	DL16ak
41	25LS151JC		1	8	3	TTL	4.0m	.40	.80	2.0	0.0	5.0	41n	52m	0	7	74-151N	DL16w
42	25LS151JM		1	8	3	TTL	4.0m	.40	.70	2.0	0.0	5.0	41n	55m	5	C	74-151N	DL16w
43	25LS151WC		1	8	3	TTL	4.0m	.40	.80	2.0	0.0	5.0	41n	52m	0	7	54-151W	F16-3b
44	25LS151WM		1	8	3	TTL	4.0m	.40	.70	2.0	0.0	5.0	41n	55m	5	C	54-151W	F16-3b
45	25LS251JC		1	8	3	TTL	4.0m	.40	.80	2.0	0.0	5.0	44n	52m	0	7	74-251N	DL16w
46	25LS251JM		1	8	3	TTL	4.0m	.40	.70	2.0	0.0	5.0	44n	55m	5	C	74-251N	DL16w
47	25LS251WC		1	8	3	TTL	4.0m	.40	.80	2.0	0.0	5.0	44n	52m	0	7	54-251W	F16-3b
48	25LS251WM		1	8	3	TTL	4.0m	.40	.70	2.0	0.0	5.0	44n	55m	5	C	54-251W	F16-3b
49	54LS151J		1	8	3	TTL	4.0m	.40	.70	2.0	0.0	5.0	43n	50m	5	C	74-151N	DL16m
50	54LS151W		1	8	3	TTL	4.0m	.40	.70	2.0	0.0	5.0	43n	50m	5	C	54-151W	F16-3b
51	54LS152J		1	8	3	TTL	4.0m	.40	.70	2.0	0.0	5.0	32n	45m	5	C	74-152B	DL14aq
52	54LS152W		1	8	3	TTL	4.0m	.40	.70	2.0	0.0	5.0	32n	45m	5	C	54-152W	F14-9
53	54LS251BL		1	8	3	TTL	4.0m	.40	.70	2.0	0.0	5.0	25n	60m	5	C	74-251N	CH20
54	54LS251J		1	8	3	TTL	4.0m	.40	.70	2.0	0.0	5.0	45n	60m	5	C	74-251N	DL16m
55	54LS251W		1	8	3	TTL	4.0m	.40	.70	2.0	0.0	5.0	45n	60m	5	C	54-251W	F16-3b
56	74LS251FC		1	8	3	TTL	4.0m	.40	.80	2.0	0.0	5.0	45n	60m	0	7	54-251W	F16-3
57	N74LS151B		1	8	3	TTL	4.0m	.50	.80	2.0	0.0	5.0	50n	50m	0	7	74-151N	DL16be
58	N74LS251B		1	8	3	TTL	4.0m	.40	.80	2.0	0.0	5.0	45n	60m	0	7	74-251N	DL16be
59	SFC4151LSEM		1	8	3	TTL	4.0m	.40	.80	2.0	0.0	5.0	50n	50m	5	C	74-151N	D16-13a
60	SFC4251LSEM		1	8	3	TTL	4.0m	.40	.80	2.0	0.0	5.0	45n	60m	5	C	CC25	D16-13a
61	74LS151FC		1	8	3	TTL	8.0m	.50	.80	2.0	0.0	5.0	48n	50m	0	7	54-151W	F16-3
62	74LS151J		1	8	3	TTL	8.0m	.50	.80	2.0	0.0	5.0	20n	50m	0	7	74-151N	DL16w
63	74LS151W		1	8	3	TTL	8.0m	.50	.80	2.0	0.0	5.0	20n	50m	0	7	54-151W	F16-3b
64	74LS152FC		1	8	3	TTL	8.0m	.50	.80	2.0	0.0	5.0	32n	45m	0	7	54-152W	TO86
65	74LS152J		1	8	3	TTL	8.0m	.50	.80	2.0	0.0	5.0	20n	45m	0	7	74-152B	DL14ak
66	74LS152W		1	8	3	TTL	8.0m	.50	.80	2.0	0.0	5.0	20n	45m	0	7	54-152W	F14-13
67	74LS251J		1	8	3	TTL	8.0m	.50	.80	2.0	0.0	5.0	25n	60m	0	7	CC11c♦	DL16w
68	74LS251W		1	8	3	TTL	8.0m	.50	.80	2.0	0.0	5.0	25n	60m	0	7	CC11c♦	F16-3b
69	93L12FC		1	8	3	TTL	8.0m	.40	.80	2.0	0.0	5.0	80n	67m	0	7	CC46	F16-3
70	ITT74LS151N		1	8	3	TTL	8.0m	.50	.80	2.0	0.0	5.0	43n	50m	0	7	CC1	D16-2c
71	SFC4151LSE		1	8	3	TTL	8.0m	.50	.80	2.0	0.0	5.0	50n	50m	0	7	74-151N	D16-13a
72	SFC4251LSE		1	8	3	TTL	8.0m	.50	.80	2.0	0.0	5.0	45n	60m	0	7	CC25	D16-13a
73	SN74LS251W		1	8	3	TTL	8.0m	.50	.80	2.0	0.0	5.0	45n	60m	0	7	54-251W	F16-14
74	MC9312L		1	8	3	TTL	11m	.40	.90	1.7	0.0	5.0	36n	135m	5	C	CC46	DL16e
75	MC8312L		1	8	3	TTL	12m	.45	.85	1.8	0.0	5.0	36n	135m	0	7	CC46	DL16e
76	MC8312P		1	8	3	TTL	12m	.45	.85	1.8	0.0	5.0	36n	135m	0	7	CC46	DL16ad
77	9312FC		1	8	3	TTL	16m	.40	.80	2.0	0.0	5.0	34n	220m	0	7	CC46	F16-3
78	9313FC		1	8	3	TTL	16m	.40	.80	2.0	0.0	5.0	34n	235m	0	7	CC46	F16-3
79	74151AFC		1	8	3	TTL	16m	.40	.80	2.0	0.0	5.0	38n	240m	0	7	54-151W	F16-3
80	74152AFC		1	8	3	TTL	16m	.40	.80	2.0	0.0	5.0	30n	215m	0	7	54-152W	TO86
81	FLY121-74151A		1	8	3	TTL	16m	.40	.80	2.0	0.0	5.0	38n	240m	0	7	74-151N	DL16ds
82	FLY125-84151A		1	8	3	TTL	16m	.40	.80	2.0	0.0	5.0	38n	240m	2	8	74-151N	DL16ds
83	GFB74151D		1	8	3	TTL	16m	.40	.80	2.0	0.0	5.0	40n	240m	0	7	CC37	D16-13c
84	ITT9312-1D		1	8	3	TTL	16m	.40	.80	2.0	0.0	5.0	36n	200m	5	C	CC35	D16-2e
85	ITT9312-5D		1	8	3	TTL	16m	.45	.85	1.9	0.0	5.0	36n	215m	0	7	CC35	D16-2e
86	ITT9312-5N		1	8	3	TTL	16m	.45	.85	1.9	0.0	5.0	36n	215m	0	7	CC35	D16-2c
87	ITT74151J		1	8	3	TTL	16m		.80	2.0	0.0	5.0	52n	240m	0	7	CC1	D16-2d
88	ITT74151N		1	8	3	TTL	16m		.80	2.0	0.0	5.0	52n	240m	0	7	CC1	D16-2c
89	MC54151L		1	8	3	TTL	16m	.40	.40	2.4	0.0	5.0	52n	145m	5	C	74-151N	DL16e
90	MC54152L		1	8	3	TTL	16m	.40	.80	2.0	0.0	5.0		130m	5	C	74-152B	TO116
91	MC74151P		1	8	3	TTL	16m	.40	.40	2.4	0.0	5.0	52n	145m	0	7	74-151N	DL16ad
92	MC74152L		1	8	3	TTL	16m	.45	.80	2.0	0.0	5.0		130m	0	7	74-152B	TO116
93	MC74152P		1	8	3	TTL	16m	.45	.80	2.0	0.0	5.0		130m	0	7	74-152B	TO116
94	MC83151P		1	8	3	TTL	16m	.40	.40	2.4	0.0	5.0	52n	145m	0	7	74-151N	DL16ad
95	MC93151L		1	8	3	TTL	16m	.40	.40	2.4	0.0	5.0	52n	145m	5	C	74-151N	DL16e
96	MIC54151J		1	8	3	TTL	16m	.40	.80	2.0	0.0	5.0	52n	240m	5	C	CC11	D16-7n
97	MIC74151J		1	8	3	TTL	16m	.40	.80	2.0	0.0	5.0	52n	240m	0	7	CC11	D16-7n
98	MIC74151N		1	8	3	TTL	16m	.40	.80	2.0	0.0	5.0	52n	240m	0	7	CC11	DL16dq
99	N82S32F		1	8	3	TTL	16m	.40	.80	2.0	0.0	5.0	17n	262m	0	7	CC29	DL16j
100	N8230W		1	8	3	TTL	16m	.40	.80	2.0	0.0	5.0	30n	250m	0	7	54-151W	F16-4
101	N8231W		1	8	3	TTL	16m	.40	.80	2.0	0.0	5.0	30n	250m	0	7	CC28	F16-4
102	N8232W		1	8	3	TTL	16m	.40	.80	2.0	0.0	5.0	30n	262m	0	7	CC29	F16-4
103	N9312B		1	8	3	TTL	16m	.40	.80	2.0	0.0	5.0		250m	0	7	74-151	DL16be
104	N9312F		1	8	3	TTL	16m	.40	.80	2.0	0.0	5.0		250m	0	7	74-151	DL16j
105	S82S30B		1	8	3	TTL	16m	.40	.80	2.0	0.0	5.0	17n	250m	5	C	74-151N	DL16be
106	S82S31B		1	8	3	TTL	16m	.40	.80	2.0	0.0	5.0	19n	250m	5	C	CC28	DL16be
107	S82S32B		1	8	3	TTL	16m	.40	.80	2.0	0.0	5.0	17n	262m	5	C	CC29	DL16be
108	S82S32F		1	8	3	TTL	16m	.40	.80	2.0	0.0	5.0	17n	262m	5	C	CC29	DL16j
109	S8230B		1	8	3	TTL	16m	.40	.80	2.0	0.0	5.0	30n	250m	5	C	74-151N	DL16be
110	S8231B		1	8	3	TTL	16m	.40	.80	2.0	0.0	5.0	30n	250m	5	C	CC28	DL16be

SYMBOLS AND CODES
EXPLAINED IN INTERPRETER

13. DIGITAL MULTIPLEXERS/SELECTORS

IN ORDER OF: (1)TECHN (2)CKT/DEV (3)INP/CKT (4)MIN OUTPUT SINK CURRENT & (5)TYPE NUMBER

LINE No.	5 TYPE NUMBER	DATA SHT.	2 CKT PER DEV	3 INP PER CKT	NO OF ADDR. LINES	1 TECHN	4 MIN OUTPUT SINK CURRENT (A)	° OUT (V)	INPUT LOGIC LEVELS MAX '0' (V)	MIN '1' (V)	RATED PWR SUPPLY SPAN NEG (V)	POS (V)	MAX PROP DELAY tpd (S)	MAX OPER POWER DISS (W)	OPER TEMP RANGE CODE -	+	DRAWINGS LOGIC OR BLOCK	OUTLINE Δ=MO
1	S8232B		1	8	3	TTL	16m	.40	.80	2.0	0.0	5.0	30n	262m	5	C	CC29	DL16be
2	S9312F		1	8	3	TTL	16m	.40	.80	2.0	0.0	5.0		250m	5	C	74-151	DL16j
3	S9312W		1	8	3	TTL	16m	.40	.80	2.0	0.0	5.0		250m	5	C	74-151	F16-4
4	SFC4151E		1	8	3	TTL	16m	.40	.80	2.0	0.0	5.0	52n	240m	0	7	74-151N	D16-13a
5	SFC4151EM		1	8	3	TTL	16m	.40	.80	2.0	0.0	5.0	52n	240m	5	C	74-151N	D16-13a
6	SFC4151ET		1	8	3	TTL	16m	.40	.80	2.0	0.0	5.0	52n	240m	2	8	74-151N	D16-13a
7	SFC4151JM		1	8	3	TTL	16m	.40	.80	2.0	0.0	5.0	52n	240m	5	C	74-151N	D16-13a
8	SFC4151KM		1	8	3	TTL	16m	.40	.80	2.0	0.0	5.0	52n	240m	5	C	74-151N	D16-13a
9	T9312F		1	8	3	TTL	16m	.40	.80	2.0	0.0	5.0	36n	220m	0	7	CC46	F16-8
10	T9312FM		1	8	3	TTL	16m	.40	.80	2.0	0.0	5.0	36n	220m	5	C	CC46	F16-8
11	T9312J		1	8	3	TTL	16m	.40	.80	2.0	0.0	5.0	36n	220m	0	7	CC46	D16-22c
12	T9312JM		1	8	3	TTL	16m	.40	.80	2.0	0.0	5.0	36n	220m	5	C	CC46	D16-22c
13	TL74151N		1	8	3	TTL	16m	.40	.80	2.0	0.0	5.0	38n	240m	0	7	CC11	DLØ
14	54S251DM		1	8	3	TTL	20m	.50	.80	2.0	0.0	5.0	20n	425m	5	C	74-251N	DL16h
15	54S251FM		1	8	3	TTL	20m	.50	.80	2.0	0.0	5.0	20n	425m	5	C	54-251W	F16-3
16	74S151FC		1	8	3	TTL	20m	.50	.80	2.0	0.0	5.0	18n	350m	0	7	54-151W	F16-3
17	74S251DC		1	8	3	TTL	20m	.50	.80	2.0	0.0	5.0	20n	425m	0	7	74-251N	DL16h
18	74S251FC		1	8	3	TTL	20m	.50	.80	2.0	0.0	5.0	20n	425m	0	7	54-251W	F16-3
19	74S251PC		1	8	3	TTL	20m	.50	.80	2.0	0.0	5.0	20n	425m	0	7	74-251N	DL16ak
20	93S12FC		1	8	3	TTL	20m	.50	.80	2.0	0.0	5.0	18n	310m	0	7	CC46	F16-3
21	M5S151P		1	8	3	TTL	20m	.50	.80	2.0	0.0	5.0	18n	350m	0	7	74-151N	DL16ae
22	M5S251P		1	8	1	TTL	20m	.50	.80	2.0	0.0	5.0	19n	500m	0	7	74-251N	DL16ae
23	T54S151F		1	8	3	TTL	20m		.80	2.0	0.0	5.0	18n	425m	5	C	54-151W	F16-8a
24	T54S151J		1	8	3	TTL	20m		.80	2.0	0.0	5.0	18n	425m	5	C	74-151N	DL16ag
25	T54S152F		1	8	3	TTL	20m		.80	2.0	0.0	5.0	18n	350m	5	C	54-152W	TO86
26	T54S152J		1	8	3	TTL	20m		.80	2.0	0.0	5.0	18n	350m	5	C	74-152B	TO116
27	T54S251F		1	8	3	TTL	20m		.80	2.0	0.0	5.0	19n	425m	5	C	54-251W	F16-8a
28	T54S251J		1	8	3	TTL	20m		.80	2.0	0.0	5.0	19n	425m	5	C	74-251W	DL16ag
29	T74S151F		1	8	3	TTL	20m		.80	2.0	0.0	5.0	18n	425m	0	7	54-151W	F16-8a
30	T74S151J		1	8	3	TTL	20m		.80	2.0	0.0	5.0	18n	425m	0	7	74-151N	DL16ag
31	T74S152F		1	8	3	TTL	20m		.80	2.0	0.0	5.0	18n	350m	0	7	54-152W	TO86
32	T74S152J		1	8	3	TTL	20m		.80	2.0	0.0	5.0	18n	350m	0	7	74-152B	TO116
33	T74S251F		1	8	3	TTL	20m		.80	2.0	0.0	5.0	19n	425m	0	7	54-251W	F16-8a
34	T74S251J		1	8	3	TTL	20m		.80	2.0	0.0	5.0	19n	425m	0	7	74-251N	DL16ag
35	74150FC		1	16	4	TTL	16m	.40	.80	2.0	0.0	5.0	35n	340m	0	7	54-150W	F24-4
36	FLY111-74150		1	16	4	TTL	16m	.40	.80	2.0	0.0	5.0	35n	340m	0	7	74-150N	DL24i
37	FLY115-84150		1	16	4	TTL	16m	.40	.80	2.0	0.0	5.0	35n	340m	2	8	74-150N	DL24i
38	GFB74150		1	16	4	TTL	16m	.40	.80	2.0	0.0	5.0	35n	340m	0	7	74-150N	D24-3a
39	MC54150L		1	16	4	TTL	16m	.40	.40	2.4	0.0	5.0	35n	200m	0	7	74-150N	DL24n
40	MC74150P		1	16	4	TTL	16m	.40	.40	2.4	0.0	5.0	35n	200m	5	C	74-150N	DL24q
41	MC83150P		1	16	4	TTL	16m	.40	.40	2.4	0.0	5.0	35n	200m	5	C	74-150N	DL24q
42	MC93150L		1	16	4	TTL	16m	.40	.40	2.4	0.0	5.0	35n	200m	0	7	74-150N	DL24n
43	MIC54150J		1	16	4	TTL	16m	.40	.80	2.0	0.0	5.0	35n	340m	5	C	74-150N	D24-3b
44	MIC74150J		1	16	4	TTL	16m	.40	.80	2.0	0.0	5.0	35n	340m	0	7	74-150N	D24-3b
45	SFC4150E		1	16	4	TTL	16m	.40	.80	2.0	0.0	5.0	35n	340m	0	7	74-150N	DL24au
46	SFC4150EM		1	16	4	TTL	16m	.40	.80	2.0	0.0	5.0	35n	340m	5	C	74-150N	DL24au
47	SFC4150ET		1	16	4	TTL	16m	.40	.80	2.0	0.0	5.0	35n	340m	2	8	74-150N	DL24au
48	SFC4150JM		1	16	4	TTL	16m	.40	.80	2.0	0.0	5.0	35n	340m	5	C	74-150N	DL24au
49	SFC4150KM		1	16	4	TTL	16m	.40	.80	2.0	0.0	5.0	35n	340m	5	C	74-150N	DL24au
50	TL74150N		1	16	4	TTL	16m	.40	.80	2.0	0.0	5.0	35n	340m	0	7	74-150N	DLØ
51	25LS153JC		2	4	2	TTL	4.0m	.40	.80	2.0	0.0	5.0	25n	52m	0	7	74-153N	DL16w
52	25LS153JM		2	4	2	TTL	4.0m	.40	.70	2.0	0.0	5.0	25n	55m	5	C	74-153N	DL16w
53	25LS153WC		2	4	2	TTL	4.0m	.40	.80	2.0	0.0	5.0	25n	52m	0	7	54-153W	F16-3b
54	25LS153WM		2	4	2	TTL	4.0m	.40	.70	2.0	0.0	5.0	25n	55m	5	C	54-153W	F16-3b
55	25LS253JC		2	4	2	TTL	4.0m	.40	.80	2.0	0.0	5.0	30n	63m	0	7	74LS253N	DL16w
56	25LS253JM		2	4	2	TTL	4.0m	.40	.70	2.0	0.0	5.0	30n	66m	5	C	74LS253N	DL16w
57	25LS253WC		2	4	2	TTL	4.0m	.40	.80	2.0	0.0	5.0	30n	63m	0	7	54LS253W	F16-3b
58	25LS253WM		2	4	2	TTL	4.0m	.40	.70	2.0	0.0	5.0	30n	66m	5	C	54LS253W	F16-3b
59	54LS153BL		2	4	2	TTL	4.0m	.40	.70	2.0	0.0	5.0	15n	50m	5	C	74-153N	CH20
60	54LS153CH		2	4	2	TTL	4.0m	.40	.70	2.0	0.0	5.0	29n	50m	5	C	74-153N	CHØ
61	54LS153J		2	4	2	TTL	4.0m	.40	.70	2.0	0.0	5.0	29n	50m	5	C	74-153N	DL16m
62	54LS153W		2	4	2	TTL	4.0m	.40	.70	2.0	0.0	5.0	29n	50m	5	C	54-153W	F16-3b
63	54LS253BL		2	4	2	TTL	4.0m	.40	.70	2.0	0.0	5.0	15n	70m	5	C	74LS253N	CH20
64	54LS253CH		2	4	2	TTL	4.0m	.40	.70	2.0	0.0	5.0	27n	70m	5	C	74LS253N	CHØ
65	54LS253J		2	4	2	TTL	4.0m	.40	.70	2.0	0.0	5.0	27n	70m	5	C	74LS253N	DL16m
66	54LS253W		2	4	2	TTL	4.0m	.40	.70	2.0	0.0	5.0	27n	70m	5	C	54LS253W	F16-3b
67	74LS153FC		2	4	2	TTL	4.0m	.40	.80	2.0	0.0	5.0	29n	50m	0	7	54-153W	F16-3
68	74LS253FC		2	4	2	TTL	4.0m	.40	.80	2.0	0.0	5.0	29n	70m	0	7	54LS253W	F16-3
69	SFC4153LSE		2	4	2	TTL	4.0m	.40	.80	2.0	0.0	5.0	38n	50m	0	7	74-153N	D16-13a
70	SFC4153LSEM		2	4	2	TTL	4.0m	.40	.80	2.0	0.0	5.0	38n	50m	5	C	74-153N	D16-13a
71	SFC4253LSEM		2	4	2	TTL	4.0m	.40	.80	2.0	0.0	5.0	32n	70m	5	C	74LS253N	D16-13a
72	74LS153J		2	4	2	TTL	8.0m	.50	.80	2.0	0.0	5.0	15n	50m	0	7	74-153N	DL16w
73	74LS153W		2	4	2	TTL	8.0m	.50	.80	2.0	0.0	5.0	15n	50m	0	7	54-153W	F16-3b
74	74LS253J		2	4	2	TTL	8.0m	.50	.80	2.0	0.0	5.0	15n	70m	0	7	74LS253N	DL16w
75	74LS253W		2	4	2	TTL	8.0m	.50	.80	2.0	0.0	5.0	15n	70m	0	7	54LS253W	F16-3b
76	74LS352FC		2	4	2	TTL	8.0m	.50	.80	2.0	0.0	5.0	38n	50m	0	7	54LS352FC	F16-3
77	74LS353FC		2	4	2	TTL	8.0m	.50	.80	2.0	0.0	5.0	32n	70m	0	7	54LS353W	F16-3
78	93L09FC		2	4	2	TTL	8.0m	.40	.80	2.0	0.0	5.0	55n	58m	0	7	CC13	F16-3
79	SFC4253LSE		2	4	2	TTL	8.0m	.50	.80	2.0	0.0	5.0	32n	70m	0	7	74LS253N	D16-13a
80	SN74LS253W		2	4	2	TTL	8.0m	.50	.80	2.0	0.0	5.0	32n	70m	0	7	54LS253W	F16-14
81	SN74LS352W		2	4	2	TTL	8.0m	.50	.80	2.0	0.0	5.0	38n	50m	0	7	54LS352W	F16-14
82	SN74LS353W		2	4	2	TTL	8.0m	.50	.80	2.0	0.0	5.0	45n	70m	0	7	54LS353W	F16-14
83	MC9309L		2	4	2	TTL	11m	.40	.90	1.7	0.0	5.0	32n	150m	5	C	CC13	DL16e
84	MC8309L		2	4	2	TTL	12m	.45	.85	1.8	0.0	5.0	36n	150m	0	7	CC13	DL16e
85	MC8309P		2	4	2	TTL	12m	.45	.85	1.8	0.0	5.0	36n	150m	0	7	CC13	DL16ad
86	9309FC		2	4	2	TTL	16m	.40	.80	2.0	0.0	5.0	29n	220m	0	7	CC13	F16-3
87	74153FC		2	4	2	TTL	16m	.40	.80	2.0	0.0	5.0	34n	300m	0	7	54-153W	F16-3
88	FLY131-74153		2	4	2	TTL	16m	.40	.80	2.0	0.0	5.0	34n	300m	0	7	74-153N	DL16ds
89	FLY135-84153		2	4	2	TTL	16m	.40	.80	2.0	0.0	5.0	34n	300m	2	8	74-153N	DL16ds
90	GFB74153		2	4	2	TTL	16m	.40	.80	2.0	0.0	5.0	34n	300m	0	7	74-153N	D16-16a
91	ITT9309-1D		2	4	2	TTL	16m	.40	.80	2.0	0.0	5.0	32n	200m	5	C	CC13	D16-2e
92	ITT9309-5D		2	4	2	TTL	16m	.45	.85	1.9	0.0	5.0	36n	215m	0	7	CC13	D16-2e
93	ITT9309-5N		2	4	2	TTL	16m	.45	.85	1.9	0.0	5.0	36n	215m	0	7	CC13	D16-2c
94	MC54153L		2	4	2	TTL	16m	.40	.80	2.0	0.0	5.0		180m	5	C	74-153N	DL16au
95	MC74153L		2	4	2	TTL	16m	.45	.80	2.0	0.0	5.0		180m	0	7	74-153N	DL16au
96	MC74153P		2	4	2	TTL	16m	.45	.80	2.0	0.0	5.0		180m	0	7	74-153N	DL16ad
97	MIC54153J		2	4	2	TTL	16m	.40	.80	2.0	0.0	5.0	34n	260m	5	C	74-153N	D16-7n
98	MIC74153J		2	4	2	TTL	16m	.40	.80	2.0	0.0	5.0	34n	300m	0	7	74-153N	D16-7n
99	MIC74153N		2	4	2	TTL	16m	.40	.80	2.0	0.0	5.0	34n	300m	0	7	74-153N	DL16dq
100	N9309B		2	4	2	TTL	16m	.45	.80	2.0	0.0	5.0	36n	175m	0	7	CC13	DL16be
101	SFC4153E		2	4	2	TTL	16m	.40	.80	2.0	0.0	5.0	34n	300m	0	7	74-153N	D16-13a
102	SFC4153EM		2	4	2	TTL	16m	.40	.80	2.0	0.0	5.0	34n	260m	5	C	74-153N	D16-13a
103	SFC4153ET		2	4	2	TTL	16m	.40	.80	2.0	0.0	5.0	34n	300m	2	8	74-153N	D16-13a
104	SFC4153JM		2	4	2	TTL	16m	.40	.80	2.0	0.0	5.0	34n	300m	5	C	74-153N	D16-13a
105	SFC4153KM		2	4	2	TTL	16m	.40	.80	2.0	0.0	5.0	34n	260m	5	C	74-153N	D16-13a
106	T9309F		2	4	2	TTL	16m	.40	.80	2.0	0.0	5.0	36n	220m	0	7	CC13	F16-8
107	T9309FM		2	4	2	TTL	16m	.40	.80	2.0	0.0	5.0	32n	220m	5	C	CC13	F16-8
108	T9309J		2	4	2	TTL	16m	.40	.80	2.0	0.0	5.0	36n	220m	0	7	CC13	D16-22c
109	T9309JM		2	4	2	TTL	16m	.40	.80	2.0	0.0	5.0	32n	220m	5	C	CC13	D16-22c
110	TL74153N		2	4	2	TTL	16m	.40	.80	2.0	0.0	5.0	34n	300m	0	7	74-153N	DLØ

SYMBOLS AND CODES EXPLAINED IN INTERPRETER

13. DIGITAL MULTIPLEXERS/SELECTORS

IN ORDER OF: (1)TECHN (2)CKT/DEV (3)INP/CKT (4)MIN OUTPUT SINK CURRENT & (5)TYPE NUMBER

LINE No.	5 TYPE NUMBER	DATA SHT.	2 CKT PER DEV	3 INP PER CKT	NO OF ADDR. LINES	1 TECHN	4 MIN OUTPUT SINK CURRENT (A)	° OUT (V)	INPUT LOGIC LEVELS MAX '0' (V)	MIN '1' (V)	RATED PWR SUPPLY SPAN NEG (V)	POS (V)	MAX PROP DELAY tpd (S)	MAX OPER POWER DISS (W)	OPER TEMP RANGE CODE -	+	DRAWINGS LOGIC OR BLOCK	OUTLINE Δ=MO
1	74S153FC		2	4	2	TTL	20m	.50	.80	2.0	0.0	5.0	18n	350m	0	7	54-153W	F16-3
2	74S253FC		2	4	2	TTL	20m	.50	.80	2.0	0.0	5.0	18n	500m	0	7	74-153N	F16-3
3	SFC4153SE		2	4	2	TTL	20m	.50	.80	2.0	0.0	5.25	18n	367m	0	7	74-153N	D16-13a
4	SFC4153SJM		2	4	2	TTL	20m	.50	.80	2.0	0.0	5.25	18n	367m	5	C	74-153N	D16-13a
5	SFC4153SKM		2	4	2	TTL	20m	.50	.80	2.0	0.0	5.25	18n	367m	5	C	74-153N	D16-13a
6	T54S153F		2	4	2	TTL	20m	.50	.80	2.0	0.0	5.0	18n	350m	5	C	54-153W	F16-3
7	T54S153J		2	4	2	TTL	20m	.50	.80	2.0	0.0	5.0	18n	350m	5	C	74-153N	DL16ag
8	T74S153F		2	4	2	TTL	20m	.50	.80	2.0	0.0	5.0	18n	350m	0	7	54-153W	F16-3
9	T74S153J		2	4	2	TTL	20m	.50	.80	2.0	0.0	5.0	18n	350m	0	7	74-153N	DL16ag
10	25LS157JC		4	2	1	TTL	4.0m	.40	.80	2.0	0.0	5.0	20n	84m	0	7	74-157N	DL16w
11	25LS157JM		4	2	1	TTL	4.0m	.40	.70	2.0	0.0	5.0	20n	88m	5	C	74-157N	DL16w
12	25LS157WC		4	2	1	TTL	4.0m	.40	.80	2.0	0.0	5.0	20n	84m	0	7	54-157W	F16-3b
13	25LS157WM		4	2	1	TTL	4.0m	.40	.70	2.0	0.0	5.0	20n	88m	5	C	54-157W	F16-3b
14	25LS158JC		4	2	1	TTL	4.0m	.40	.80	2.0	0.0	5.0	20n	42m	0	7	74S158N	DL16w
15	25LS158JM		4	2	1	TTL	4.0m	.40	.70	2.0	0.0	5.0	20n	44m	5	C	74S158N	DL16w
16	25LS158WC		4	2	1	TTL	4.0m	.40	.80	2.0	0.0	5.0	20n	42m	0	7	54S158W	F16-3b
17	25LS158WM		4	2	1	TTL	4.0m	.40	.70	2.0	0.0	5.0	20n	44m	5	C	54S158W	F16-3b
18	25LS257JC		4	2	1	TTL	4.0m	.40	.80	2.0	0.0	5.0	18n	80m	0	7	74S257N	DL16w
19	25LS257JM		4	2	1	TTL	4.0m	.40	.70	2.0	0.0	5.0	18n	84m	5	C	74S257N	DL16w
20	25LS257WC		4	2	1	TTL	4.0m	.40	.80	2.0	0.0	5.0	18n	80m	0	7	54S257W	F16-3b
21	25LS257WM		4	2	1	TTL	4.0m	.40	.70	2.0	0.0	5.0	18n	84m	5	C	54S257W	F16-3b
22	25LS258JC		4	2	1	TTL	4.0m	.40	.80	2.0	0.0	5.0	18n	58m	0	7	74S258N	DL16w
23	25LS258JM		4	2	1	TTL	4.0m	.40	.70	2.0	0.0	5.0	18n	61m	5	C	74S258N	DL16w
24	25LS258WC		4	2	1	TTL	4.0m	.40	.80	2.0	0.0	5.0	18n	58m	0	7	54S258W	F16-3b
25	25LS258WM		4	2	1	TTL	4.0m	.40	.70	2.0	0.0	5.0	18n	61m	5	C	54S258W	F16-3b
26	54LS157CH		4	2	1	TTL	4.0m	.40	.70	2.0	0.0	5.0	23n	80m	5	C	74-157N	CHØ
27	54LS157J		4	2	1	TTL	4.0m	.40	.70	2.0	0.0	5.0	23n	80m	5	C	74-157N	DL16m
28	54LS157W		4	2	1	TTL	4.0m	.40	.70	2.0	0.0	5.0	23n	80m	5	C	54-157W	F16-3b
29	54LS158CH		4	2	1	TTL	4.0m	.40	.70	2.0	0.0	5.0	22n	40m	5	C	74S158N	CHØ
30	54LS158J		4	2	1	TTL	4.0m	.40	.70	2.0	0.0	5.0	22n	40m	5	C	74S158N	DL16m
31	54LS158W		4	2	1	TTL	4.0m	.40	.70	2.0	0.0	5.0	22n	40m	5	C	54S158W	F16-3b
32	54LS257CH		4	2	1	TTL	4.0m	.40	.70	2.0	0.0	5.0	18n	85m	5	C	74S257N	CHØ
33	54LS257J		4	2	1	TTL	4.0m	.40	.70	2.0	0.0	5.0	18n	85m	5	C	74S257N	DL16m
34	54LS257W		4	2	1	TTL	4.0m	.40	.70	2.0	0.0	5.0	18n	85m	5	C	54S257W	F16-3b
35	54LS258CH		4	2	1	TTL	4.0m	.40	.70	2.0	0.0	5.0	18n	60m	5	C	74S258N	CHØ
36	54LS258J		4	2	1	TTL	4.0m	.40	.70	2.0	0.0	5.0	18n	60m	5	C	74S258N	DL16m
37	54LS258W		4	2	1	TTL	4.0m	.40	.70	2.0	0.0	5.0	18n	60m	5	C	54S258W	F16-3b
38	54LS298J		4	2	1	TTL	4.0m	.40	.70	2.0	0.0	5.0	16n	105m	5	C	74-298N	DL16w
39	54LS298W		4	2	1	TTL	4.0m	.40	.70	2.0	0.0	5.0	16n	105m	5	C	54-298W	F16-3b
40	54LS399DM		4	2	1	TTL	4.0m	.25	.70	2.0	0.0	5.0	32n	65m	5	C	CC69	DL16h
41	54LS399FM		4	2	1	TTL	4.0m	.25	.70	2.0	0.0	5.0	32n	65m	5	C	CC69	F16-3
42	74LS257FC		4	2	1	TTL	4.0m	.40	.80	2.0	0.0	5.0	21n	85m	0	7	54S257W	F16-3
43	74LS258FC		4	2	1	TTL	4.0m	.40	.80	2.0	0.0	5.0	21n	60m	0	7	54S258W	F16-3
44	74LS298FC		4	2	1	TTL	4.0m	.25	.80	2.0	0.0	5.0	25n	105m	0	7	54-298W	F16-3
45	74LS398PC		4	2	1	TTL	4.0m	.25	.80	2.0	0.0	5.0	32n	65m	0	7	CC69a	DL20c
46	74LS399DC		4	2	1	TTL	4.0m	.25	.80	2.0	0.0	5.0	32n	65m	0	7	CC69	DL16h
47	74LS399FC		4	2	1	TTL	4.0m	.25	.80	2.0	0.0	5.0	32n	65m	0	7	CC69	F16-3
48	74LS399PC		4	2	1	TTL	4.0m	.25	.80	2.0	0.0	5.0	32n	65m	0	7	CC69	DL16ak
49	N74LS258B		4	2	1	TTL	4.0m	.40	.80	2.0	0.0	5.0	21n	60m	0	7	74S258N	DL16be
50	SFC4157LSEM		4	2	1	TTL	4.0m	.40	.80	2.0	0.0	5.0	27n	80m	5	C	74-157N	D16-13a
51	SN54LS398W		4	2	1	TTL	4.0m	.40	.70	2.0	0.0	5.0	32n	65m	5	C	54LS398	F20-1
52	74LS157FC		4	2	1	TTL	8.0m	.50	.80	2.0	0.0	5.0	26n	80m	0	7	54-157W	F16-3
53	74LS157J		4	2	1	TTL	8.0m	.50	.80	2.0	0.0	5.0	15n	80m	0	7	74-157N	DL16w
54	74LS157W		4	2	1	TTL	8.0m	.50	.80	2.0	0.0	5.0	15n	80m	0	7	54-157W	F16-3b
55	74LS158FC		4	2	1	TTL	8.0m	.50	.80	2.0	0.0	5.0	24n	40m	0	7	54S158W	F16-3
56	74LS158J		4	2	1	TTL	8.0m	.50	.80	2.0	0.0	5.0	12n	40m	0	7	74S158N	DL16w
57	74LS158W		4	2	1	TTL	8.0m	.50	.80	2.0	0.0	5.0	12n	40m	0	7	54S158W	F16-3b
58	74LS257J		4	2	1	TTL	8.0m	.45	.80	2.0	0.0	5.0	18n	76m	0	7	74S257N	DL16w
59	74LS257W		4	2	1	TTL	8.0m	.45	.80	2.0	0.0	5.0	18n	76m	0	7	54S257W	F16-3b
60	74LS258J		4	2	1	TTL	8.0m	.45	.80	2.0	0.0	5.0	15n	60m	0	7	74S258N	DL16w
61	74LS258W		4	2	1	TTL	8.0m	.45	.80	2.0	0.0	5.0	15n	60m	0	7	54S258W	F16-3b
62	74LS298J		4	2	1	TTL	8.0m	.45	.80	2.0	0.0	5.0	16n	105m	0	7	74-298N	DL16w
63	74LS298W		4	2	1	TTL	8.0m	.45	.80	2.0	0.0	5.0	16n	105m	0	7	54-298W	F16-3b
64	93L22FC		4	2	1	TTL	8.0m	.40	.80	2.0	0.0	5.0	34n	66m	0	7	54-157W	F16-3
65	SFC4157LSE		4	2	1	TTL	8.0m	.50	.80	2.0	0.0	5.0	27n	80m	0	7	74-157N	D16-13a
66	SN74LS157W		4	2	1	TTL	8.0m	.50	.80	2.0	0.0	5.0	14n	80m	0	7	54-157W	F16-14
67	SN74LS158W		4	2	1	TTL	8.0m	.50	.80	2.0	0.0	5.0	24n	40m	0	7	54S158W	F16-14
68	SN74LS298W		4	2	1	TTL	8.0m	.50	.80	2.0	0.0	5.0	25n	105m	0	7	54-298W	F16-14
69	SN74LS398W		4	2	1	TTL	8.0m	.50	.80	2.0	0.0	5.0	32n	65m	0	7	54LS398	F20-1
70	SN74LS399W		4	2	1	TTL	8.0m	.50	.80	2.0	0.0	5.0	32n	65m	0	7	54LS399W	F16-14
71	9322FC		4	2	1	TTL	16m	.40	.80	2.0	0.0	5.0	27n	235m	0	7	54-157W	F16-3
72	74157FC		4	2	1	TTL	16m	.40	.80	2.0	0.0	5.0	27n	240m	0	7	54-157W	F16-3
73	74298FC		4	2	1	TTL	16m	.40	.80	2.0	0.0	5.0	32n	325m	0	7	54-298W	F16-3
74	FLY171-74157		4	2	1	TTL	16m	.40	.80	2.0	0.0	5.0	27n	240m	0	7	74-157N	DL16ds
75	FLY175-84157		4	2	1	TTL	16m	.40	.80	2.0	0.0	5.0	27n	240m	2	8	74-157N	DL16ds
76	GFB74157		4	2	1	TTL	16m	.40	.80	2.0	0.0	5.0	27n	240m	0	7	74-157N	D16-16a
77	ITT9322-1D		4	2	1	TTL	16m	.40	.80	2.0	0.0	5.0	27n	215m	5	C	74-157N	D16-2e
78	ITT9322-5D		4	2	1	TTL	16m	.45	.85	1.9	0.0	5.0	31n	225m	0	7	74-157N	D16-2e
79	ITT9322-5N		4	2	1	TTL	16m	.45	.85	1.9	0.0	5.0	31n	225m	0	7	74-157N	D16-2c
80	MC7266L		4	2	1	TTL	16m	.40	.40	4.5	0.0	5.0	30n	271m	0	7	CC48	DL16e
81	MC7266P		4	2	1	TTL	16m	.40	.40	4.5	0.0	5.0	30n	271m	5	C	CC48	DL16ad
82	MC7267L		4	2	1	TTL	16m	.40	.40	4.5	0.0	5.0	36n	271m	0	7	CC48	DL16e
83	MC7267P		4	2	1	TTL	16m	.40	.40	4.5	0.0	5.0	36n	271m	5	C	CC48	DL16ad
84	MC8266L		4	2	1	TTL	16m	.40	.40	4.5	0.0	5.0	30n	271m	0	7	CC48	DL16e
85	MC8267L		4	2	1	TTL	16m	.40	.40	4.5	0.0	5.0	36n	271m	0	7	CC48	DL16e
86	MC8322F		4	2	1	TTL	16m	.40	.40	2.4	0.0	5.0	27n	150m	0	7	54-157W	DL16ad
87	MC8322L		4	2	1	TTL	16m	.40	.40	2.4	0.0	5.0	27n	150m	0	7	74-157N	DL16e
88	MC8322P		4	2	1	TTL	16m	.40	.40	2.4	0.0	5.0	27n	150m	0	7	74-157N	F16-11
89	MC9322F		4	2	1	TTL	16m	.40	.40	2.4	0.0	5.0	27n	150m	5	C	54-157W	F16-11
90	MC9322L		4	2	1	TTL	16m	.40	.40	2.4	0.0	5.0	27n	150m	5	C	74-157N	DL16e
91	MC54157F		4	2	1	TTL	16m	.40	.40	2.4	0.0	5.0	27n	150m	5	C	54-157W	F16-11
92	MC54157L		4	2	1	TTL	16m	.40	.40	2.4	0.0	5.0	27n	150m	5	C	74-157N	DL16e
93	MC74157F		4	2	1	TTL	16m	.40	.40	2.4	0.0	5.0	27n	150m	0	7	54-157W	F16-11
94	MC74157L		4	2	1	TTL	16m	.40	.40	2.4	0.0	5.0	27n	150m	0	7	74-157N	DL16e
95	MC74157P		4	2	1	TTL	16m	.40	.40	2.4	0.0	5.0	27n	150m	0	7	74-157N	DL16ad
96	MIC54157J		4	2	1	TTL	16m	.40	.80	2.0	0.0	5.0	27n	240m	5	C	74-157N	DL16bg
97	MIC74157J		4	2	1	TTL	16m	.40	.80	2.0	0.0	5.0	27n	240m	0	7	74-157N	DL16bg
98	MIC74157N		4	2	1	TTL	16m	.40	.80	2.0	0.0	5.0	27n	240m	0	7	74-157N	DL16bg
99	N8233W		4	2	2	TTL	16m	.40	.80	2.0	0.0	5.0	38n	252m	0	7	CC30	F16-4
100	N8234W		4	2	2	TTL	16m	.40	.80	2.0	0.0	5.0	38n	210m	0	7	CC30	F16-4
101	N8235W		4	2	2	TTL	16m	.40	.80	2.0	0.0	5.0	38n	310m	0	7	CC32	F16-4
102	S82S33B		4	2	2	TTL	16m	.40	.80	2.0	0.0	5.0	18n	252m	5	C	CC30	DL16be
103	S82S33F		4	2	2	TTL	16m	.40	.80	2.0	0.0	5.0	18n	252m	5	C	CC30	DL16j
104	S82S34B		4	2	2	TTL	16m	.40	.80	2.0	0.0	5.0	18n	210m	5	C	CC30	DL16be
105	S82S34F		4	2	2	TTL	16m	.40	.80	2.0	0.0	5.0	18n	210m	5	C	CC30	DL16j
106	S8233B		4	2	2	TTL	16m	.40	.80	2.0	0.0	5.0	38n	252m	5	C	CC30	DL16be
107	S8234B		4	2	2	TTL	16m	.40	.80	2.0	0.0	5.0	38n	210m	5	C	CC30	DL16be
108	S8235B		4	2	2	TTL	16m	.40	.80	2.0	0.0	5.0	38n	310m	5	C	CC32	DL16be
109	SFC4157E		4	2	1	TTL	16m	.40	.80	2.0	0.0	5.0	27n	240m	0	7	74-157N	D16-13a
110	SFC4157EM		4	2	1	TTL	16m	.40	.80	2.0	0.0	5.0	27n	240m	5	C	74-157N	D16-13a

SYMBOLS AND CODES EXPLAINED IN INTERPRETER

13. DIGITAL MULTIPLEXERS/SELECTORS

IN ORDER OF: (1)TECHN (2)CKT/DEV (3)INP/CKT (4)MIN OUTPUT SINK CURRENT & (5)TYPE NUMBER

LINE No.	5 TYPE NUMBER	DATA SHT.	2 CKT PER DEV	3 INP PER CKT	NO OF ADDR. LINES	1 TECHN	4 MIN OUTPUT SINK CURRENT (A)	* OUT (V)	INPUT LOGIC LEVELS MAX '0' (V)	MIN '1' (V)	RATED PWR SUPPLY SPAN NEG (V)	POS (V)	MAX PROP DELAY tpd (S)	MAX OPER POWER DISS (W)	OPER TEMP RANGE CODE -	+	DRAWINGS LOGIC OR BLOCK	OUTLINE Δ=MO
1	SFC4157ET		4	2	1	TTL	16m	.40	.80	2.0	0.0	5.0	27n	240m	2	8	74-157N	D16-13a
2	SFC4157JM		4	2	1	TTL	16m	.40	.80	2.0	0.0	5.0	27n	240m	5	C	74-157N	D16-13a
3	SFC4157KM		4	2	1	TTL	16m	.40	.80	2.0	0.0	5.0	27n	240m	5	C	74-157N	D16-13a
4	T9322F		4	2	1	TTL	16m	.40	.80	2.0	0.0	5.0	31n	235m	0	7	54-157W	F16-8
5	T9322FM		4	2	1	TTL	16m	.40	.80	2.0	0.0	5.0	31n	235m	5	C	54-157W	F16-8
6	T9322J		4	2	1	TTL	16m	.40	.80	2.0	0.0	5.0	31n	235m	0	7	74-157N	D16-22c
7	T9322JM		4	2	1	TTL	16m	.40	.80	2.0	0.0	5.0	31n	235m	5	C	74-157N	D16-22c
8	54S257DM		4	2	1	TTL	20m	.50	.80	2.0	0.0	5.0	15n	495m	5	C	74S257N	DL16h
9	54S257FM		4	2	1	TTL	20m	.50	.80	2.0	0.0	5.0	15n	495m	5	C	54S257W	F16-3
10	74S157FC		4	2	1	TTL	20m	.50	.80	2.0	0.0	5.0	15n	390m	0	7	54-157W	F16-3
11	74S158FC		4	2	1	TTL	20m	.50	.80	2.0	0.0	5.0	12n	305m	0	7	54S158W	F16-3
12	74S257FC		4	2	1	TTL	20m	.50	.80	2.0	0.0	5.0	15n	495m	0	7	54S257W	F16-3
13	74S258FC		4	2	1	TTL	20m	.50	.80	2.0	0.0	5.0	12n	435m	0	7	74S258N	F16-3
14	M5S157P		4	2	1	TTL	20m	.50	.80	2.0	0.0	5.0	15n	390m	0	7	74-157N	DL16ae
15	M5S158P		4	2	1	TTL	20m	.50	.80	2.0	0.0	5.0	12n	305m	0	7	74S158N	DL16ae
16	M5S257P		4	2	1	TTL	20m	.50	.80	2.0	0.0	5.0	15n	495m	0	7	74S257N	DL16ae
17	M5S258P		4	2	1	TTL	20m	.50	.80	2.0	0.0	5.0	12n	435m	0	7	74S258N	DL16ae
18	N74S258B		4	2	1	TTL	20m	.50	.80	2.0	0.0	5.0	12n	435m	0	7	74S258N	DL16be
19	SFC4157SE		4	2	1	TTL	20m	.50	.80	2.0	0.0	5.0	15n	390m	0	7	74-157N	D16-13a
20	SFC4157SJM		4	2	1	TTL	20m	.50	.80	2.0	0.0	5.0	15n	390m	5	C	74-157N	D16-13a
21	SFC4157SKM		4	2	1	TTL	20m	.50	.80	2.0	0.0	5.0	15n	390m	5	C	74-157N	D16-13a
22	SFC4158SE		4	2	1	TTL	20m	.50	.80	2.0	0.0	5.0	12n	305m	0	7	74S158N	D16-13a
23	SFC4158SJM		4	2	1	TTL	20m	.50	.80	2.0	0.0	5.0	12n	305m	5	C	74S158N	D16-13a
24	SFC4158SKM		4	2	1	TTL	20m	.50	.80	2.0	0.0	5.0	12n	305m	5	C	74S158N	D16-13a
25	T54S157F		4	2	1	TTL	20m	.50	.80	2.0	0.0	5.0	15n	390m	5	C	54-157W	F16-8a
26	T54S157J		4	2	1	TTL	20m	.50	.80	2.0	0.0	5.0	15n	390m	5	C	74-157N	DL16ag
27	T54S158F		4	2	1	TTL	20m	.50	.80	2.0	0.0	5.0	12n	305m	5	C	CC45	F16-8a
28	T54S158J		4	2	1	TTL	20m	.50	.80	2.0	0.0	5.0	12n	305m	5	C	CC45	DL16ag
29	T74S157F		4	2	1	TTL	20m	.50	.80	2.0	0.0	5.0	15n	390m	0	7	54-157W	F16-8a
30	T74S157J		4	2	1	TTL	20m	.50	.80	2.0	0.0	5.0	15n	390m	0	7	74-157N	DL16ag
31	T74S158F		4	2	1	TTL	20m	.50	.80	2.0	0.0	5.0	12n	305m	0	7	CC45	F16-8a
32	T74S158J		4	2	1	TTL	20m	.50	.80	2.0	0.0	5.0	12n	305m	0	7	CC45	DL16ag
33	74LS258AFC		4	2	1	TTL	24m	.50	.80	2.0	0.0	5.0	21n	95m	0	7	54S258W	F16-3
34	SN74LS257AW		4	2	1	TTL	24m	.50	.80	2.0	0.0	5.0	18n	95m	0	7	54S257W	F16-14
35	SN74LS258AW		4	2	1	TTL	24m	.50	.80	2.0	0.0	5.0	21n	63n	0	7	54S258W	F16-14
36	N8263Q		4	3	2	TTL	9.6m	.40	.80	2.0	0.0	5.0	36n	420m	0	7	CC33	F24-2
37	N8264Q		4	3	2	TTL	16m	.40	.80	2.0	0.0	5.0	36n	475m	0	7	CC34a	F24-2

SYMBOLS AND CODES EXPLAINED IN INTERPRETER

14. DIGITAL DE-MULTIPLEXERS/DE-CODERS

IN ORDER OF: (1)TECHN (2)CKT/DEV (3)OUT CHAN (4)MIN OUTPUT SINK CURRENT & (5)TYPE NUMBER

LINE No.	5 TYPE NUMBER	DATA SHT.	DEMUX 2 CKT PER DEV	3 C OH UA TN	DECODES LINES FROM	TO	1 T E C H N	4 MIN OUTPUT SINK CURRENT (A)	° OUT (V)	INPUT LOGIC LEVELS MAX '0' (V)	MIN '1' (V)	RATED PWR SUPPLY SPAN NEG (V)	POS (V)	MAX PROP DELAY tpd (S)	MAX OPER POWER DISS (W)	OPER TEMP RANGE CODE -	+	DRAWINGS LOGIC OR BLOCK	OUTLINE Δ=MO
1	SCL25411		1	4			CMS					0.3	8.0	1.4u	450m	0	7		
2	SCL5285		1	8			CMS			2.0	5.0				300m	0	5		
3	54SC137C		1	8	3	8	CMS	12m		0.8	2.0	0.0	5.0	55n	500m	5	C	74LS137N	DL16ft
4	54SC138C		1	8	3	8	CMS	12m		0.8	2.0	0.0	5.0	55n	500m	5	C	74S138	DL16ft
5	54SC237C		1	8	3	8	CMS	12m		0.8	2.0	0.0	5.0	55n	500m	5	C	74LS237N	DL16ft
6	54SC238C		1	8	3	8	CMS	12m		0.8	2.0	0.0	5.0	55n	500m	5	C	74S238N	DL16ft
7	H74SC137C		1	8	3	8	CMS	12m		0.8	2.0	0.0	5.0	33n	500m	0	7	74LS137N	DL16ft
8	H74SC137D		1	8	3	8	CMS	12m		0.8	2.0	0.0	5.0	33n	500m	0	7	74LS137N	DL16fs
9	H74SC137P		1	8	3	8	CMS	12m		0.8	2.0	0.0	5.0	33n	500m	0	7	74LS137N	DL16fr
10	H74SC138C		1	8	3	8	CMS	12m		0.8	2.0	0.0	5.0	33n	500m	0	7	74S138	DL16ft
11	H74SC138D		1	8	3	8	CMS	12m		0.8	2.0	0.0	5.0	33n	500m	0	7	74S138	DL16fs
12	H74SC138P		1	8	3	8	CMS	12m		0.8	2.0	0.0	5.0	33n	500m	0	7	74S138	DL16fr
13	H74SC237C		1	8	3	8	CMS	12m		0.8	2.0	0.0	5.0	33n	500m	0	7	74LS237N	DL16ft
14	H74SC237D		1	8	3	8	CMS	12m		0.8	2.0	0.0	5.0	33n	500m	0	7	74LS237N	DL16fs
15	H74SC237P		1	8	3	8	CMS	12m		0.8	2.0	0.0	5.0	33n	500m	0	7	74LS237N	DL16fr
16	H74SC238C		1	8	3	8	CMS	12m		0.8	2.0	0.0	5.0	33n	500m	0	7	74S238N	DL16ft
17	H74SC238D		1	8	3	8	CMS	12m		0.8	2.0	0.0	5.0	33n	500m	0	7	74S238N	DL16fs
18	H74SC238P		1	8	3	8	CMS	12m		0.8	2.0	0.0	5.0	33n	500m	0	7	74S238N	DL16fr
19	MD74SC137AE		1	8	3	8	CMS	12m	.40	.80	2.0	0.0	5.0	13n	450m	4	8	74LS137	DL16co
20	MD74SC138AE		1	8	3	8	CMS	12m	.40	.80	2.0	0.0	5.0	13n	450m	4	8	74S138N	DL16co
21	MD74SC238AE		1	8	3	8	CMS	12m	.40	.80	2.0	0.0	5.0	13n	450m	4	8	CD50	DL16co
22	HEF4514P		1	16	4	16	CMS	2.0m	.50	3.0	7.0	0.0	10	135n	400m	4	8	CD17	D24-4c
23	HEF4515P		1	16	4	16	CMS	2.0m	.50	3.0	7.0	0.0	10	135n	400m	4	8	CD17a	D24-4c
24	HEF4555P		2	4	2	4	CMS	2.0m	.50	3.0	7.0	0.0	10	60n	400m	4	8	CD3a	DL16h
25	HEF4556P		2	4	2	4	CMS	2.0m	.50	3.0	7.0	0.0	10	60n	400m	4	8	74S139N	DL16h
26	CD4555BK		2	4	2	4	CMS	3.4m	1.5	4.0	11	0.0	15	140n	300u	5	C	CD3a	Δ004AG
27	CD4556BK		2	4	2	4	CMS	3.4m	1.5	4.0	11	0.0	15	140n	300u	5	C	54S139W	Δ004AG
28	54SC139C		2	4	2	4	CMS	12m		0.8	2.0	0.0	5.0	55n	500m	5	C	74S139N	DL16ft
29	54SC239C		2	4	2	4	CMS	12m		0.8	2.0	0.0	5.0	55n	500m	5	C	74S239N	DL16ft
30	H74SC139C		2	4	2	4	CMS	12m		0.8	2.0	0.0	5.0	33n	500m	0	7	74S139N	DL16ft
31	H74SC139D		2	4	2	4	CMS	12m		0.8	2.0	0.0	5.0	33n	500m	0	7	74S139N	DL16fs
32	H74SC139P		2	4	2	4	CMS	12m		0.8	2.0	0.0	5.0	33n	500m	0	7	74S139N	DL16fr
33	H74SC239C		2	4	2	4	CMS	12m		0.8	2.0	0.0	5.0	33n	500m	0	7	74S239N	DL16ft
34	H74SC239D		2	4	2	4	CMS	12m		0.8	2.0	0.0	5.0	33n	500m	0	7	74S239N	DL16fs
35	H74SC239P		2	4	2	4	CMS	12m		0.8	2.0	0.0	5.0	33n	500m	0	7	74S239N	DL16fr
36	MD74SC139AE		2	4	2	4	CMS	12m	.40	.80	2.0	0.0	5.0	13n	450m	4	8	74S139N	DL16co
37	MD74SC239AE		2	4	2	4	CMS	12m	.40	.80	2.0	0.0	5.0	13n	450m	4	8	CD51	DL16co
38	MD74SC237AE		2	8	3	8	CMS	24m		.80	2.0	0.0	5.0	24n	450m	4	8		DL16co
39	G74SC237D#ai		8	1	3	8	CMS	24m	5.0	0.8	2.0	0.5	7.0	49n	450m	0	7	CD58	
40	G74SC237P#ai		8	1	3	8	CMS	24m	5.0	0.8	2.0	0.5	7.0	49n	450m	0	7	CD58	
41	G74SC238D#ai		8	1	3	8	CMS	24m	5.0	0.8	2.0	0.5	7.0	42n	450m	0	7	CD59	
42	G74SC238P#ai		8	1	3	8	CMS	24m	5.0	0.8	2.0	0.5	7.0	42n	450m	0	7	CD59	
43	HD100170		1	8	1	8	ECL			1.48	1.17	4.5	0.0	2.1n		0	8	CD53	DL24Ø
44	100170DC#1		1	8	3	8	ECL	18m	-1.1	-1.4	-1.1	4.5	0.0	3.9n	688m	0	7	CD22	DL24f
45	100170FC#1		1	8	3	8	ECL	18m	-1.1	-1.4	-1.1	4.5	0.0	3.9n	688m	0	7	CD22	F24-8
46	10161FC		1	8	3	8	ECL	20m	-.96	-1.4	-1.1	5.2	0.0	6.0n	395m	0	7	CD26	F16-3
47	10161PC		1	8	3	8	ECL	20m	-.96	-1.4	-1.1	5.2	0.0	6.0n	395m	0	7	CD26	DL16ak
48	10162FC		1	8	3	8	ECL	20m	-.96	-1.4	-1.1	5.2	0.0	6.0n	395m	0	7	CD26a	F16-3
49	10162PC		1	8	3	8	ECL	20m	-.96	-1.4	-1.1	5.2	0.0	6.0n	395m	0	7	CD26a	DL16ak
50	HD21S170		2	4	4	1	ECL			-1.8	-.88	4.5	0.0	3.9n		0	8		
51	100170DC#2		2	4	2	4	ECL	18m	-1.1	-1.4	-1.1	4.5	0.0	3.9n	688m	0	7	CD22a	DL24f
52	100170FC#2		2	4	2	4	ECL	18m	-1.1	-1.4	-1.1	4.5	0.0	3.9n	688m	0	7	CD22a	F24-8
53	10171FC		2	4	2	4	ECL	20m	-.96	-1.4	-1.1	5.2	0.0	6.0n	400m	0	7	CH12	F16-3
54	10171PC		2	4	2	4	ECL	20m	-.96	-1.4	-1.1	5.2	0.0	6.0n	400m	0	7	CH12	DL16ak
55	10172FC		2	4	2	4	ECL	20m	-.96	-1.4	-1.1	5.2	0.0	6.0n	400m	0	7	CD12a	F16-3
56	10172PC		2	4	2	4	ECL	20m	-.96	-1.4	-1.1	5.2	0.0	6.0n	400m	0	7	CD12a	DL16ak
57	SAB3211Z				4	7	NMS			8.0	13	0.0	16		500m	0	7	CD52	
58	FLH551-7448		1		4	7	TTL	6.4m	0.4	.80	2.0	0.0	5.0	100n	265m	0	7	74-48N	
59	FLH555-8448		1		4	7	TTL	6.4m	0.4	.80	2.0	0.0	5.0	100n	265m	2	8	74-48N	
60	S54LS42F		1	4	1	8	TTL	4m	.4	.7	2.0	.5	7.0	30n		5	C	74-42N	DL16gq
61	S54LS42W		1	4	1	8	TTL	4m	.4	.7	2.0	.5	7.0	30n		5	C	54LS42W	F16-4
62	N74LS42F		1	4	1	8	TTL	8m	.5	.8	2.0	.5	7.0	30n		0	7	74-42N	DL16gq
63	N74LS42N		1	4	1	8	TTL	8m	.5	.8	2.0	.5	7.0	30n		0	7	74-42N	DL16be
64	25LS138JC		1	8	3	8	TTL	4.0m	.40	.80	2.0	0.0	5.0	27n	52m	0	7	74S138N	DL16w
65	25LS138JM		1	8	3	8	TTL	4.0m	.40	.70	2.0	0.0	5.0	27n	55m	5	C	74S138N	DL16w
66	25LS138WC		1	8	3	8	TTL	4.0m	.40	.80	2.0	0.0	5.0	27n	52m	0	7	54S138W	F16-3b
67	25LS138WM		1	8	3	8	TTL	4.0m	.40	.70	2.0	0.0	5.0	27n	55m	5	C	54S138W	F16-3b
68	54LS138CH		1	8	3	8	TTL	4.0m	.40	.70	2.0	0.0	5.0	28n	50m	5	C	74S138N	CHØ
69	54LS138J		1	8	3	8	TTL	4.0m	.40	.70	2.0	0.0	5.0	28n	50m	5	C	74S138N	DL16m
70	54LS138W		1	8	3	8	TTL	4.0m	.40	.70	2.0	0.0	5.0	28n	50m	5	C	54S138W	F16-3b
71	ITT74LS138N		1	8	3	8	TTL	4.0m	.40	.80	2.0	0.0	5.0	39n	50m	0	7	74S138N	D16-2c
72	SFC4138LSEM		1	8	3	8	TTL	4.0m	.40	.80	2.0	0.0	5.0	37n	55m	5	C	74S138N	D16-13a
73	SN74LS138W		1	8	3	8	TTL	4.0m	.40	.80	2.0	0.0	5.0	41n	50m	0	7	54S138W	F16-14
74	74LS138FC		1	8	3	8	TTL	8.0m	.50	.80	2.0	0.0	5.0	27n	50m	0	7	54S138W	F16-3
75	74LS138J		1	8	3	8	TTL	8.0m	.50	.80	2.0	0.0	5.0	23n	50m	0	7	74S138N	DL16w
76	74LS138W		1	8	3	8	TTL	8.0m	.50	.80	2.0	0.0	5.0	23n	50m	0	7	54S138W	F16-3b
77	SFC4138LSE		1	8	3	8	TTL	8.0m	.50	.80	2.0	0.0	5.0	37n	55m	0	7	74S138N	D16-13a
78	74S137FC		1	8	3	8	TTL	20m	.50	.80	2.0	0.0	5.0	20n	475m	0	7	54LS137W	F16-3
79	74S138FC		1	8	3	8	TTL	20m	.50	.80	2.0	0.0	5.0	12n	370m	0	7	54S138W	F16-3
80	93L11FC		1	16	4	16	TTL	8.0m	.40	.80	2.0	0.0	5.0	85n	83m	0	7	54-154W	F24-4
81	9311FC		1	16	4	16	TTL	16m	.40	.80	2.0	0.0	5.0	31n	280m	0	7	54-154W	F24-4
82	74154FC		1	16	4	16	TTL	16m	.40	.80	2.0	0.0	5.0	31n	280m	0	7	54-154W	F24-4
83	MIC54154J		1	16	4	16	TTL	16m	.40	.80	2.0	0.0	5.0	36n	245m	5	C	74-154N	D24-3b
84	MIC74154J		1	16	4	16	TTL	16m	.40	.80	2.0	0.0	5.0	36n	280m	0	7	74-154N	D24-3b
85	MIC74155J		1	16	4	16	TTL	16m	.40	.80	2.0	0.0	5.0	32n	200m	0	7	74-155N	D16-7n
86	N74159F		1	16	4	16	TTL	16m	.40	.80	2.0	0.0	5.0	36n	280m	0	7	74-159N	DL24m
87	N74159N		1	16	4	16	TTL	16m	.40	.80	2.0	0.0	5.0	36n	280m	0	7	74-159N	DL24ac
88	S54154I		1	16	4	16	TTL	16m	.40	.80	2.0	0.0	5.0	36n	245m	5	C	74-154N	DL24m
89	S54154Q		1	16	4	16	TTL	16m	.40	.80	2.0	0.0	5.0	36n	245m	5	C	54-154W	F24-2
90	S54159F		1	16	4	16	TTL	16m	.40	.80	2.0	0.0	5.0	36n	280m	5	C	74-159N	DL24m
91	S54159W		1	16	4	16	TTL	16m	.40	.80	2.0	0.0	5.0	36n	280m	5	C	74-159N	F24-9
92	SFC4154E		1	16	4	16	TTL	16m	.40	.80	2.0	0.0	5.0	36n	280m	0	7	74-154N	DL24au
93	SFC4154EM		1	16	4	16	TTL	16m	.40	.80	2.0	0.0	5.0	36n	245m	5	C	74-154N	DL24au
94	SFC4154ET		1	16	4	16	TTL	16m	.40	.80	2.0	0.0	5.0	36n	280m	2	8	74-154N	DL24au
95	SFC4154JM		1	16	4	16	TTL	16m	.40	.80	2.0	0.0	5.0	36n	245m	5	C	74-154N	DL24au
96	SFC4154KM		1	16	4	16	TTL	16m	.40	.80	2.0	0.0	5.0	36n	245m	5	C	74-154N	DL24au
97	25LS139JC		2	4	2	4	TTL	4.0m	.40	.80	2.0	0.0	5.0	21n	57m	0	7	74S139N	DL16w
98	25LS139JM		2	4	2	4	TTL	4.0m	.40	.70	2.0	0.0	5.0	21n	60m	5	C	74S139N	DL16w
99	25LS139WC		2	4	2	4	TTL	4.0m	.40	.80	2.0	0.0	5.0	21n	57m	0	7	54S139W	F16-3b
100	25LS139WM		2	4	2	4	TTL	4.0m	.40	.70	2.0	0.0	5.0	21n	60m	5	C	54S139W	F16-3b
101	54LS139CH		2	4	2	4	TTL	4.0m	.40	.70	2.0	0.0	5.0	25n	55m	5	C	74S139N	CHØ
102	54LS139J		2	4	2	4	TTL	4.0m	.40	.70	2.0	0.0	5.0	25n	55m	5	C	74S139N	DL16m
103	54LS139W		2	4	2	4	TTL	4.0m	.40	.70	2.0	0.0	5.0	25n	55m	5	C	54S139W	F16-3b
104	54LS155CH		2	4	2	4	TTL	4.0m	.40	.70	2.0	0.0	5.0	27n	50m	5	C	74-155N	CHØ
105	54LS155J		2	4	2	4	TTL	4.0m	.40	.70	2.0	0.0	5.0	27n	50m	5	C	74-155N	DL16m
106	54LS155W		2	4	2	4	TTL	4.0m	.40	.70	2.0	0.0	5.0	27n	50m	5	C	54-155W	F16-3b
107	54LS156CH		2	4	2	4	TTL	4.0m	.40	.70	2.0	0.0	5.0	37n	50m	5	C	74-156N	CHØ
108	54LS156J		2	4	2	4	TTL	4.0m	.40	.70	2.0	0.0	5.0	37n	50m	5	C	74-156N	DL16m
109	54LS156W		2	4	2	4	TTL	4.0m	.40	.70	2.0	0.0	5.0	37n	50m	5	C	54-156W	F16-3b
110	54LS255CH		2	4	2	4	TTL	4.0m	.40	.70	2.0	0.0	5.0	26n	85m	5	C	74-155N	CHØ

SYMBOLS AND CODES EXPLAINED IN INTERPRETER

14. DIGITAL DE-MULTIPLEXERS/DE-CODERS

IN ORDER OF: (1)TECHN (2)CKT/DEV (3)OUT CHAN (4)MIN OUTPUT SINK CURRENT & (5)TYPE NUMBER

LINE No.	5 TYPE NUMBER	DATA SHT.	DEMUX 2 CKT PER DEV	DECODES 3 C OH UA TN	LINES FROM	LINES TO	1 T E C H N	4 MIN OUTPUT SINK CURRENT (A)	° OUT (V)	INPUT LOGIC LEVELS MAX '0' (V)	MIN '1' (V)	RATED PWR SUPPLY SPAN NEG (V)	POS (V)	MAX PROP DELAY tpd (S)	MAX OPER POWER DISS (W)	OPER TEMP RANGE CODE -	+	DRAWINGS LOGIC OR BLOCK	OUTLINE Δ=MO
1	54LS255J		2	4	2	4	TTL	4.0m	.40	.70	2.0	0.0	5.0	26n	85m	5	C	74-155	DL16m
2	54LS255W		2	4	2	4	TTL	4.0m	.40	.70	2.0	0.0	5.0	26n	85m	5	C	74-155	F16-3b
3	74LS156FC		2	4	2	4	TTL	4.0m	.40	.80	2.0	0.0	5.0	34n	50m	0	7	54-156W	F16-3
4	ITT74LS139N		2	4	2	4	TTL	4.0m	.40	.80	2.0	0.0	5.0	38n	55m	0	7	74S139N	D16-2c
5	SFC4139LSEM		2	4	3	4	TTL	4.0m	.40	.80	2.0	0.0	5.0	37n	55m	5	C	74S139N	D16-13a
6	SFC4155LSEM		2	4	2	4	TTL	4.0m	.40	.80	2.0	0.0	5.0	30n	50m	5	C	74-155N	D16-13a
7	SN74LS139W		2	4	2	4	TTL	4.0m	.40	.80	2.0	0.0	5.0	38n	55m	0	7	54S139W	F16-14
8	74LS139FC		2	4	2	4	TTL	8.0m	.50	.80	2.0	0.0	5.0	27n	55m	0	7	54S139W	F16-3
9	74LS139J		2	4	2	4	TTL	8.0m	.50	.80	2.0	0.0	5.0	23n	55m	0	7	74S139N	DL16w
10	74LS139W		2	4	2	4	TTL	8.0m	.50	.80	2.0	0.0	5.0	23n	55m	0	7	54S139W	F16-3b
11	74LS155FC		2	4	2	4	TTL	8.0m	.50	.80	2.0	0.0	5.0	27n	50m	0	7	74-155N	F16-3
12	74LS155J		2	4	2	4	TTL	8.0m	.50	.80	2.0	0.0	5.0	40n	50m	0	7	74-155N	DL16w
13	74LS155W		2	4	2	4	TTL	8.0m	.50	.80	2.0	0.0	5.0	40n	50m	0	7	54-155W	F16-3b
14	74LS156J		2	4	2	4	TTL	8.0m	.50	.80	2.0	0.0	5.0	40n	50m	0	7	74-156N	DL16w
15	74LS156W		2	4	2	4	TTL	8.0m	.50	.80	2.0	0.0	5.0	40n	50m	0	7	54-156W	F16-3b
16	74LS255J		2	4	2	4	TTL	8.0m	.50	.80	2.0	0.0	5.0	25n	85m	0	7	74-255	DL16w
17	74LS255W		2	4	2	4	TTL	8.0m	.50	.80	2.0	0.0	5.0	25n	85m	0	7	54-255	F16-3b
18	93L21FC		2	4	2	4	TTL	8.0m	.40	.80	2.0	0.0	5.0	65n	66m	0	7	54S139W	F16-3
19	SFC4139LSE		2	4	3	4	TTL	8.0m	.50	.80	2.0	0.0	5.0	37n	55m	0	7	74S139N	D16-13a
20	SFC4155LSE		2	4	2	4	TTL	8.0m	.50	.80	2.0	0.0	5.0	30n	50m	0	7	74-155N	D16-13a
21	9321FC		2	4	2	4	TTL	16m	.40	.80	2.0	0.0	5.0	21n	250m	0	7	54S139W	F16-3
22	74155FC		2	4	2	4	TTL	16m	.40	.80	2.0	0.0	5.0	32n	200m	0	7	54-155W	F16-3
23	74156FC		2	4	2	4	TTL	16m	.40	.80	2.0	0.0	5.0	34n	200m	0	7	54-156W	F16-3
24	FLY151-74155		2	4	2	4	TTL	16m	.40	.80	2.0	0.0	5.0	32n	200m	0	7	74-155N	DL16ds
25	FLY155-84155		2	4	2	4	TTL	16m	.40	.80	2.0	0.0	5.0	32n	200m	2	8	74-155N	DL16ds
26	FLY161-74156		2	4	2	4	TTL	16m	.40	.80	2.0	0.0	5.0	34n	200m	0	7	74-156N	N
27	FLY165-84156		2	4	2	4	TTL	16m	.40	.80	2.0	0.0	5.0	34n	200m	2	8	74-1456N	DL16ds
28	GFB74155		2	4	2	4	TTL	16m	.40	.80	2.0	0.0	5.0	32n	200m	0	7	74-155N	D16-16a
29	MC54155F		2	4	2	4	TTL	16m	.40	.40	2.4	0.0	5.0	32n	125m	5	C	54-155W	F16-11
30	MC54155L		2	4	2	4	TTL	16m	.40	.40	2.4	0.0	5.0	32n	125m	5	C	74-155N	DL16e
31	MC54156F		2	4	2	4	TTL	16m	.40	.40	2.4	0.0	5.0	34n	125m	5	C	54-156W	F16-11
32	MC54156L		2	4	2	4	TTL	16m	.40	.40	2.4	0.0	5.0	34n	125m	5	C	74-156N	DL16e
33	MC74155F		2	4	2	4	TTL	16m	.40	.40	2.4	0.0	5.0	32n	125m	0	7	54-155W	F16-11
34	MC74155L		2	4	2	4	TTL	16m	.40	.40	2.4	0.0	5.0	32n	125m	0	7	74-155N	DL16e
35	MC74155P		2	4	2	4	TTL	16m	.40	.40	2.4	0.0	5.0	32n	125m	0	7	74-155N	DL16ad
36	MC74156F		2	4	2	4	TTL	16m	.40	.40	2.4	0.0	5.0	34n	125m	0	7	54-156W	F16-11
37	MC74156L		2	4	2	4	TTL	16m	.40	.40	2.4	0.0	5.0	34n	125m	0	7	74-156N	DL16e
38	MC74156P		2	4	2	4	TTL	16m	.40	.40	2.4	0.0	5.0	34n	125m	0	7	74-156N	DL16ad
39	MIC54155J		2	4	2	4	TTL	16m	.40	.80	2.0	0.0	5.0	32n	175m	5	C	74-155N	D16-7n
40	MIC54156J		2	4	2	4	TTL	16m	.40	.80	2.0	0.0	5.0	34n	175m	5	C	74-155N	D16-7n
41	MIC74155N		2	4	2	4	TTL	16m	.40	.80	2.0	0.0	5.0	32n	200m	0	7	74-155N	DL16dq
42	MIC74156J		2	4	2	4	TTL	16m	.40	.80	2.0	0.0	5.0	34n	200m	0	7	74-156N	D16-7n
43	MIC74156N		2	4	2	4	TTL	16m	.40	.80	2.0	0.0	5.0	34n	200m	0	7	74-156N	DL16dq
44	SFC4155E		2	4	2	4	TTL	16m	.40	.80	2.0	0.0	5.0	32n	200m	0	7	74-155N	D16-13a
45	SFC4155EM		2	4	2	4	TTL	16m	.40	.80	2.0	0.0	5.0	32n	175m	5	C	74-155N	D16-13a
46	SFC4155ET		2	4	2	4	TTL	16m	.40	.80	2.0	0.0	5.0	32n	200m	2	8	74-155N	D16-13a
47	SFC4155JM		2	4	2	4	TTL	16m	.40	.80	2.0	0.0	5.0	32n	175m	5	C	74-155N	D16-13a
48	SFC4155KM		2	4	2	4	TTL	16m	.40	.80	2.0	0.0	5.0	32n	175m	5	C	74-155N	D16-13a
49	SFC4156E		2	4	2	4	TTL	16m	.40	.80	2.0	0.0	5.0	34n	200m	0	7	74-156N	D16-13a
50	SFC4156EM		2	4	2	4	TTL	16m	.40	.80	2.0	0.0	5.0	34n	175m	5	C	74-156N	D16-13a
51	SFC4156ET		2	4	2	4	TTL	16m	.40	.80	2.0	0.0	5.0	34n	200m	2	8	74-156N	D16-13a
52	74S139FC		2	4	2	4	TTL	20m	.50	.80	2.0	0.0	5.0	12n	450m	0	7	54S139W	F16-3

SYMBOLS AND CODES EXPLAINED IN INTERPRETER

15. LINE RECEIVERS

IN ORDER OF: (1)TECHN (2)INP MODE (3)CKT/DEV (4)HIGH THRESH VOLT-INPUT & (5)TYPE NUMBER

LINE No.	5 TYPE NUMBER	DATA SHT.	2 IM NO PD E	3 CKT PER DEV	THRESHOLD VOLT-INPUT 4 HIGH (V)	LOW (V)	MAX INPUT RESIS (Ω)	MIN OUTPUT SINK CURRENT (A)	° OUT (V)	1 TECHN	OUTPUT LOGIC LEVELS MAX '0' (V)	MIN '1' (V)	RATED PWR SUP SPAN NEG (V)	POW (V)	MAX PROP DELAY tpd (S)	MAX OPER POWER DISS (W)	OPER TEMP RANGE CODE -	+	DRAWINGS LOGIC OR BLOCK	OUTLINE Δ=MO
1	CM1161		S	2	.80	2.1	7.0k	1.6m	.40		.40	4.0	12	5.0	200n	270m	0	7	DA1	TO116
2	DS78C20N		D	2	.20	-.20	5.0k	1.6m	.50	CMS	.50	13.8	0.0	15	100n	450m	5	C	DA68	DL14o
3	DS78C120W		D	2	.20	-.20	5.0k	1.6m	.50	CMS	2.5	12.5	0.0	15	100n	450m	5	C	DA72	F16-1
4	uA55107ADM		D	2						DTL	0.40	2.4	5.0	5.0	25n	670m	5	C	DA5	DL14ao
5	ITT9615-1J		D	2	.50	-.50	167	15m	.40	DTL	.40	2.4	0.0	5.0	50n	250m	5	C	DA43	D16-2d
6	ITT9615-5J		D	2	.50	-.50	179	15m	.45	DTL	.40	2.4	0.0	5.0	75n	250m	0	7	DA43	D16-2d
7	RC9622DC		D	2	2.0	1.0		12m	.40	DTL	.40	3.0	10	5.0	50n	670m	0	7	DA33	DL14aq
8	RM9622CJ		D	2	2.0	1.0		12m	.40	DTL	.40	3.0	10	5.0	50n	570m	5	C	DA33	TO86
9	RM9622DC		D	2	2.0	1.0		12m	.40	DTL	.40	3.0	10	5.0	50n	670m	5	C	DA33	DL14aq
10	uA75154DC		S	4	3.0	-3.0	7.0k			DTL	0.40	2.4		12	22n	800m	0	7	DA7	DL14ao
11	MC1035P		D	3	-1.0	-1.3		2.5m	-.70	ECL	-1.5	-.85	5.2	0.0	8.0n	140m	0	7	DA49	TO116
12	MC1066P		D	3	-1.0	-1.3		2.5m	-.70	ECL	-1.5	-.85	5.2	0.0	5.0n	300m	0	7	DA49	TO116
13	MC1235F		D	3	-1.0	-1.3		2.5m	-.70	ECL	-1.5	-.85	5.2	0.0	8.0n	140m	5	C	DA49	TO86
14	MC1235L		D	3	-1.0	-1.3		2.5m	-.70	ECL	-1.5	-.85	5.2	0.0	8.0n	140m	5	C	DA49	TO116
15	MC1266F		D	3	-1.0	-1.3		2.5m	-.70	ECL	-1.5	-.85	5.2	0.0	5.0n	300m	5	C	DA49	F16-11
16	MC1266L		D	3	-1.0	-1.3		2.5m	-.70	ECL	-1.5	-.85	5.2	0.0	5.0n	300m	5	C	DA49	DL16at
17	10114FC		D	3	-1.1	-1.4		20m	-.96	ECL	-1.6	-.96	5.2	0.0	4.0n	182m	0	7	DA64	F16-3
18	10114PC		D	3	-1.1	-1.4		20m	-.96	ECL	-1.6	-.96	5.2	0.0	4.0n	182m	0	7	DA64	DL16ak
19	10116FC		D	3	-1.1	-1.4		20m	-.96	ECL	-1.6	-.96	5.2	0.0	2.9n	109m	0	7	DA63	F16-3
20	10116PC		D	3	-1.1	-1.4		20m	-.96	ECL	-1.6	-.96	5.2	0.0	2.9n	109m	0	7	DA63	DL16ak
21	SP1692		D	4	-.98	-1.6				ECL	-.81	-1.8			1.7n	220n	3	8	DE62	DL16bs
22	MC1020P		D	4	-1.0	-1.3		2.5m	-.70	ECL	-1.5	-.85	5.2	0.0	7.0n	115m	0	7	DA48	TO116
23	MC1220F		D	4	-1.0	-1.3		2.5m	-.70	ECL	-1.5	-.85	5.2	0.0	7.0n	115m	5	C	DA48	TO86
24	MC1220L		D	4	-1.0	-1.3		2.5m	-.70	ECL	-1.5	-.85	5.2	0.0	7.0n	115m	5	C	DA48	TO116
25	10115FC		D	4	-1.1	-1.4		20m	-.96	ECL	-1.6	-.96	5.2	0.0	2.9n	135m	0	7	DA62	F16-3
26	10115PC		D	4	-1.1	-1.4		20m	-.96	ECL	-1.6	-.96	5.2	0.0	2.9n	135m	0	7	DA62	DL16ak
27	HD102121		S	3			20k			ECL	1.8	.80	5.2	0.0	8.0n		0	7		
28	ITT1489-1J		S	4	1.5	.75	7.0k	10m	.45	RTL	.45	2.6	0.0	5.0	85n	130m	5	C	DA8a	D14-1d
29	ITT1489-5J		S	4	1.5	.75	7.0k	10m	.45	RTL	.45	2.6	0.0	5.0	85n	130m	0	7	DA8a	D14-1d
30	ITT1489A-1J		S	4	2.25	.75	7.0k	10m	.45	RTL	.45	2.6	0.0	5.0	85n	130m	5	C	DA8b	D14-1d
31	ITT1489A-5J		S	4	2.25	.75	7.0k	10m	.45	RTL	.45	2.6	0.0	5.0	85n	130m	0	7	DA8b	D14-1d
32	SP722BE		D	1	.009	0.0		16m	.40	TTL	.40	2.4	5.0	5.0	20n	145m	0	7	DA28	DL14bf
33	SP722BF		D	1	.009	0.0		16m	.40	TTL	.40	2.4	5.0	5.0	20n	145m	0	7	DA28	F10-1
34	SP722BT		D	1	.009	0.0		16m	.40	TTL	.40	2.4	5.0	5.0	20n	145m	0	7	DA28	CN8
35	SP723BE		D	1	.014	.005		16m	.40	TTL	.40	2.4	5.0	5.0	20n	155m	0	7	DA29	DL14bf
36	SP723BF		D	1	.014	.005		16m	.40	TTL	.40	2.4	5.0	5.0	20n	155m	0	7	DA29	F10-1
37	DS3604J		D	2	.01	-.03		16m	.40	TTL	.40	2.4	5.0	5.0	35n	275m	0	7	DA37	DL14an
38	DS3604N		D	2	.01	-.03		16m	.40	TTL	.40	2.4	5.0	5.0	35n	275m	0	7	DA37	DL14o
39	SP724BE		D	2	.014	.005		16m	.40	TTL	.40	2.4	5.0	5.0	20n	230m	0	7	DA30	DL14bf
40	SP724BF		D	2	.014	.005		16m	.40	TTL	.40	2.4	5.0	5.0	20n	230m	0	7	DA30	F14-6
41	DS1603W		D	2	.10	-.10		16m	.40	TTL	.40	2.4	5.0	5.0	25n	275m	5	C	DA37	F14-5
42	DS55107W		D	2	.10	-.10		16m	.40	TTL	.40	2.4	5.0	5.0	25n	225m	5	C	DA5	F14-5
43	DS55108W		D	2	.10	-.10		16m	.40	TTL	.40	2.4	5.0	5.0	25n	225m	5	C	DA5	F14-5
44	DS78LS20J		D	2	.20	-.20		4.0m	.40	TTL	.40	2.5	0.0	5.0	30n	22m	5	C	DA4	DL14an
45	DS78LS20W		D	2	.20	-.20		4.0m	.40	TTL	.40	2.5	0.0	5.0	30n	22m	5	C	DA4	F14-5
46	DS78LS120W		D	2	.20	-.20	5.0k	4.0m	.50	TTL	.50	2.5	0.0	5.0	60n	80m	5	C	DA72	F16-1
47	DS88LS20J		D	2	.20	-.20		4.0m	.40	TTL	.40	2.5	0.0	5.0	30n	22m	0	7	DA4	DL14an
48	DS88LS20N		D	2	.20	-.20		4.0m	.40	TTL	.40	2.5	0.0	5.0	30n	22m	0	7	DA4	DL14o
49	9620DC		D	2	.50	.12		15m	.50	TTL	.50	2.8	0.0	12	75n	169m	0	7	DA31	DL14ao
50	9620DM		D	2	.50	.12		15m	.45	TTL	.45	2.8	0.0	12	50n	161m	5	C	DA31	DL14ao
51	9620FM		D	2	.50	.12		15m	.45	TTL	.45	2.8	0.0	12	50n	161m	5	C	DA31	TO86
52	9620PC		D	2	.50	.12		15m	.50	TTL	.50	2.8	0.0	12	75n	169m	0	7	DA31	DL14bn
53	DS7820AW		D	2	.50	-.50	2.5k	16m	.40	TTL	.40	2.5	0.0	5.0	45n	70m	5	C	75-182N	F14-5
54	DS7820N		D	2	.50	-.50	2.5k	3.5m	.40	TTL	.40	2.5	0.0	5.0	45n	75m	5	C	DA4	DL14f
55	DS7820W		D	2	.50	-.50	2.5k	3.5m	.40	TTL	.40	2.5	0.0	5.0	150n	75m	5	C	DA4	F14-5
56	DS8820AW		D	2	.50	-.50	2.5k	16m	.40	TTL	.40	2.5	0.0	5.0	45n	70m	0	7	DA4	F14-5
57	DS8820W		D	2	.50	-.50	2.5k	3.5m	.40	TTL	.40	2.5	0.0	5.0	150n	75m	0	7	DA4	F14-5
58	DS55115W		D	2	.50	-.50	167	15m	.40	TTL	.40	2.4	0.0	5.0	50n	250m	5	C	DA3	F16-1
59	9627FM		D	2	.60	-.60	7.0k	6.4m	.40	TTL	.40	2.4	12	12	250n	408m	5	C	DA35	F16-3
60	9613HC		D	2	1.0	-1.0	4.2k	16m	.40	TTL	.40	2.4	0.0	5.0	40n	250m	0	7	DA39	TO99
61	9613HM		D	2	1.0	-1.0	4.2k	16m	.40	TTL	.40	2.4	0.0	5.0	40n	250m	5	C	DA39	TO99
62	9613RC		D	2	1.0	-1.0	4.2k	16m	.40	TTL	.40	2.4	0.0	5.0	40n	250m	0	7	DA73	DL8f
63	9613RM		D	2	1.0	-1.0	4.2k	16m	.40	TTL	.40	2.4	0.0	5.0	40n	250m	5	C	DA73	DL8f
64	9613TC		D	2	1.0	-1.0	4.2k	16m	.40	TTL	.40	2.4	0.0	5.0	40m	250m	0	7	DA73	DL8q
65	DM7820A		D	2	1.0	-1.0	2.5k	3.5m	.40	TTL	.40	2.5	0.0	5.0	40n	600m	5	C	DA4a	DL14b
66	DM7820F		D	2	1.0	-1.0	2.5k	3.5m	.40	TTL	.40	2.5	0.0	5.0	40n	600m	5	C	DA4a	DL14ap
67	DM8820A		D	2	1.0	-1.0	2.5k	3.5m	.40	TTL	.40	2.5	0.0	5.0	40n	600m	0	7	DA4a	DL14b
68	DM8820F		D	2	1.0	-1.0	2.5k	3.5m	.40	TTL	.40	2.5	0.0	5.0	40n	600m	0	7	DA4a	DL14ap
69	9622DC		D	2	2.0	1.0	185	12m	.40	TTL	.40	2.8	10	5.0	100n	225m	0	7	DA33	DL14ao
70	9622DM		D	2	2.0	1.0	175	12m	.40	TTL	.40	2.8	10	5.0	50n	225m	5	C	DA33	DL14ao
71	9622FM		D	2	2.0	1.0		12m	.40	TTL	.40	2.8	10	5.0	50n	225m	5	C	DA33	TO86
72	9622PC		D	2	2.0	1.0	185	12m	.40	TTL	.40	2.8	10	5.0	100n	225m	0	7	DA33	DL14bn
73	DM7830A		D	2	2.0	.40		40m	.50	TTL	.40	2.4	0.0	5.0	18n		5	C	DA57	DL14b
74	DM7830F		D	2	2.0	.40		40m	.50	TTL	.40	2.4	0.0	5.0	18n		5	C	DA57	DL14ap
75	DM8830A		D	2	2.0	.40		40m	.50	TTL	.40	2.4	0.0	5.0	18n		0	7	DA57	DL14b
76	DM8830F		D	2	2.0	.40		40m	.50	TTL	.40	2.4	0.0	5.0	18n		0	7	DA57	DL14ap
77	75S108A		D	2	5.0	-5.0	4.0k	20m	.50	TTL			5.0	5.0	17n	600m	0	7	DA5b	DL14b
78	55107ADM		D	2	5.0	-5.0		16m	.40	TTL	.40	2.4	5.0	5.0	25n	225m	5	C	75-107	DL14ao
79	55107AFM		D	2	5.0	-5.0		16m	.40	TTL	.40	2.4	5.0	5.0	25n	225m	5	C	75-107	TO86
80	55107BDM		D	2	5.0	-5.0		16m	.40	TTL	.40	2.4	5.0	5.0	25n	225m	5	C	75-107	DL14ao
81	55107BFM		D	2	5.0	-5.0		16m	.40	TTL	.40	2.4	5.0	5.0	25n	225m	5	C	75-107	TO86
82	55108ADM		D	2	5.0	-5.0		16m	.40	TTL	.40	2.4	5.0	5.0	25n	225m	5	C	DA5	DL14ao
83	55108AFM		D	2	5.0	-5.0		16m	.40	TTL	.40	2.4	5.0	5.0	25n	225m	5	C	DA5	TO86
84	55108BDM		D	2	5.0	-5.0		16m	.40	TTL	.40		5.0	5.0	25n	225m	5	C	75-108	DL14ao
85	55108BFM		D	2	5.0	-5.0		16m	.40	TTL	.40		5.0	5.0	25n	225m	5	C	75-108	TO86
86	75108ADC		D	2	5.0	-5.0		16m	.40	TTL	.40	2.4	5.0	5.0	25n	225m	0	7	75-108	DL14ao
87	75108APC		D	2	5.0	-5.0		16m	.40	TTL	.40	2.4	5.0	5.0	25n	225m	0	7	DA5	DL14bn
88	75108BDC		D	2	5.0	-5.0		16m	.40	TTL	.40		5.0	5.0	25n	225m	0	7	75-108	DL14ao
89	SFC5107AE		D	2	5.0	-5.0		16m	.40	TTL	.40	2.4	5.0	5.0	25n	150m	0	7	DA5	TO116
90	SFC5107AEM		D	2	5.0	-5.0		16m	.40	TTL	.40	2.4	5.0	5.0	25n	150m	5	C	DA5	TO116
91	SFC5107AJM		D	2	5.0	-5.0		16m	.40	TTL	.40	2.4	5.0	5.0	25n	150m	5	C	DA5	TO116
92	SFC5107AKM		D	2	5.0	-5.0		16m	.40	TTL	.40	2.4	5.0	5.0	25n	150m	5	C	DA5	TO116
93	SFC5108AE		D	2	5.0	-5.0		16m	.40	TTL	.40	2.4	5.0	5.0	25n	150m	0	7	DA5	TO116
94	SFC5108AEM		D	2	5.0	-5.0		16m	.40	TTL	.40	2.4	5.0	5.0	25n	150m	5	C	DA5	TO116
95	SFC5108AJM		D	2	5.0	-5.0		16m	.40	TTL	.40	2.4	5.0	5.0	25m	150m	5	C	DA5	TO116
96	SFC5108AKM		D	2	5.0	-5.0		16m	.40	TTL	.40	2.4	5.0	5.0	25n	150m	5	C	DA5	TO116
97	ITT7140		D	2	7.0	-7.0		16m		TTL	.40	2.4	12	5.0	28n	560m	0	7	DA53	TO116
98	HD1-246		D	3	.15	0.0	61	10m	.45	TTL	.45	2.6	5.0	5.0	30n	63m	5	C	DA40a	DL14r
99	HD1-248		D	3	.15	0.0	61	9.6m	.45	TTL	.45	2.6	5.0	5.0	30n	69m	5	C	DA40b	DL14r
100	HD1-249		D	3	.15	0.0	61	9.6m	.45	TTL	.45	2.6	5.0	5.0	30n	69m	5	C	DA40	DL14r
101	HD1-546		D	3	.15	0.0	65	10m	.45	TTL	.45	2.6	5.0	5.0	30n	69m	0	7	DA40a	DL14r
102	HD1-548		D	3	.15	0.0	65	9.6m	.45	TTL	.45	2.6	5.0	5.0	30n	75m	0	7	DA40b	DL14r
103	HD1-549		D	3	.15	0.0	65	9.6m	.45	TTL	.45	2.6	5.0	5.0	30n	75m	0	7	DA40	DL14r
104	HD9-246		D	3	.15	0.0	61	10m	.45	TTL	.45	2.6	5.0	5.0	30n	63m	5	C	DA40a	TO86
105	HD9-248		D	3	.15	0.0	61	9.6m	.45	TTL	.45	2.6	5.0	5.0	30n	69m	5	C	DA40b	TO86
106	HD9-249		D	3	.15	0.0	61	9.6m	.45	TTL	.45	2.6	5.0	5.0	30n	69m	5	C	DA40	TO86
107	HD9-546		D	3	.15	0.0	65	10m	.45	TTL	.45	2.6	5.0	5.0	30n	69m	0	7	DA40a	TO86
108	HD9-548		D	3	.15	0.0	65	9.6m	.45	TTL	.45	2.6	5.0	5.0	30n	75m	0	7	DA40b	TO86
109	HD9-549		D	3	.15	0.0	65	9.6m	.45	TTL	.45	2.6	5.0	5.0	30n	75m	0	7	DA40	TO86
110	M5A26L532P		D	4		.030			0.40	TTL	0.40	2.4	0.0	5.0	17n		2	7	DA70	DL16dy

SYMBOLS AND CODES EXPLAINED IN INTERPRETER

15. LINE RECEIVERS

IN ORDER OF: (1)TECHN (2)INP MODE (3)CKT/DEV (4)HIGH THRESH VOLT-INPUT & (5)TYPE NUMBER

LINE No.	5 TYPE NUMBER	DATA SHT.	2 IM NO PD E	3 CKT PER DEV	THRESHOLD VOLT-INPUT 4 HIGH (V)	LOW (V)	MAX INPUT RESIS (Ω)	MIN OUTPUT SINK CURRENT (A)	° OUT (V)	1 TECHN	OUTPUT LOGIC LEVELS MAX '0' (V)	MIN '1' (V)	RATED PWR SUP SPAN NEG (V)	POW (V)	MAX PROP DELAY tpd (S)	MAX OPER POWER DISS (W)	OPER TEMP RANGE CODE -	+	DRAWINGS LOGIC OR BLOCK	OUTLINE Δ=MO
1	DS1689J		D	4	.20	-.20		4.0m	.40	TTL	.40	2.5	0.0	5.0	30n	22m	5	C	DA23	DL16g
2	DS1690J		D	4	.20	-.20		4.0m	.40	TTL	.40	2.5	0.0	5.0	30n	22m	5	C	DA24	DL18ad
3	DS3689J		D	4	.20	-.20		4.0m	.40	TTL	.40	2.5	0.0	5.0	30n	22m	0	7	DA23	DL16g
4	DS3689N		D	4	.20	-.20		4.0m	.40	TTL	.40	2.5	0.0	5.0	30n	22m	0	7	DA23	DL16bv
5	DS3690J		D	4	.20	-.20		4.0m	.40	TTL	.40	2.5	0.0	5.0	30n	22m	0	7	DA24	DL18ad
6	DS3690N		D	4	.20	-.20		4.0m	.40	TTL	.40	2.5	0.0	5.0	30n	22m	0	7	DA24	DL18j
7	8T110F		D	4	2.0	.80		20m	.50	TTL	.40	2.4	0.0	5.0	30n		0	7	DA56	DL16j
8	8T111F		D	4	2.0	.80		20m	.50	TTL	.40	2.4	0.0	5.0	30n		0	7	DA56a	DL16j
9	DS26LS32MW		D	4	2.0	.80	8.5k	8.0m	.45	TTL	.45	2.5	5.0	15	25n	1.4	5	C	DA70	F16-1
10	DS26LS33MW		D	4	2.0	.80	8.5k	8.0m	.45	TTL	.45	2.5	5.0	15	25n	1.6	5	C	DA70	F16-1
11	5551		D	8	.50	-.50		16m	.40	TTL	.40	2.5	0.0	5.0	150n	600m	0	7	DA47	PC12
12	5551A		D	8	.50	-.50		3.2m	.40	TTL	.40	2.5	0.0	5.0	150n	600m	0	7	DA47	PC12
13	5551B		D	8	.50	-.50		3.2m	.40	TTL	.40	2.5	0.0	5.0	150n	600m	0	7	DA47	PC12
14	5551C		D	8	.50	-.50		3.2m	.40	TTL	.40	2.5	0.0	5.0	150n	600m	0	7	DA47	PC12
15	MC75140P1		S	2	.16	3.4		16m	.40	TTL	.40	2.4	0.0	5.0	35n	175m	0	7	DA9	DL8p
16	DS7822J		S	2	2.0	-2.0	7.0k	3.5m	.40	TTL	.40	2.5	0.0	5.0	125n	120m	5	C	DA36	DL14an
17	N8T16A		S	2	4.5	.40	7.0k	9.6m	.40	TTL	.40	2.6	0.0	5.0	150n	150m	0	7	DA54	DL14b
18	55122DM		S	3	1.5	.60		16m	.40	TTL	.40	2.6	0.0	5.0	30n	360m	5	C	DA10	DL16h
19	55122FM		S	3	1.5	.60		16m	.40	TTL	.40	2.6	0.0	5.0	30n	360m	5	C	DA2	F16-3
20	75122DC		S	3	1.5	.60		16m	.40	TTL	.40	2.6	0.0	5.0	30n	360m	0	7	DA10	DL16h
21	75122PC		S	3	1.5	.60		16m	.40	TTL	.40	2.6	0.0	5.0	30n	360m	0	7	DA10	DL16ak
22	75124DC		S	3	1.5	.40		16m	.40	TTL	.40	2.6	0.0	5.0	30n	360m	0	7	DA2	DL16h
23	75124PC		S	3	1.5	.40		16m	.40	TTL	.40	2.6	0.0	5.0	30n	360m	0	7	DA2	DL16ak
24	uA8T14DC		S	3	1.5	.50	30k	16m	.40	TTL	.40	2.6	0.0	5.0	30n	380m	0	7	DA10	DL16h
25	uA8T14DM		S	3	1.5	.50	30k	16m	.40	TTL	.40	2.6	0.0	5.0	30n	380m	5	C	DA10	DL16h
26	uA8T14FM		S	3	1.5	.50	30k	16m	.40	TTL	.40	2.6	0.0	5.0	30n	380m	5	C	DA2	F16-3
27	uA8T14PC		S	3	1.5	.50	30k	16m	.40	TTL	.40	2.6	0.0	5.0	30n	380m	0	7	DA10	DL16ak
28	uA8T24PC		S	3	1.5	.40	18k	16m	.40	TTL	.40	2.6	0.0	5.0	30n	380m	0	7	75-122N	DL16ak
29	N8T24B		S	3	1.7	.70		16m	.40	TTL	.40	2.6	0.0	5.0	30n	380m	0	7	DA10	DL16be
30	9617DC		S	3	2.0	.85	7.0k	8.0m	.40	TTL	.40	2.4	0.0	5.0	60n	60m	0	7	DA32	DL14ao
31	9617PC		S	3	2.0	.85	7.0k	8.0m	.40	TTL	.40	2.4	0.0	5.0	60n	60m	0	7	DA32	DL14bn
32	DS55122W		S	3	2.0	.80		16m	.40	TTL	.40	2.6	0.0	5.0	30n	360m	5	C	DA2	F16-1
33	RC8T14DD		S	3	2.0	.80		16m	.40	TTL	.40	2.8	0.0	5.0	30n	380m	0	7	DA10	DL16m
34	RC8T24DD		S	3	2.0	.80		16m	.40	TTL	.40	2.6	0.0	5.0	30n	380m	0	7	DA10	DL16m
35	RM8T14DD		S	3	2.0	.80		16m	.40	TTL	.40	2.8	0.0	5.0	30n	380m	5	C	DA10	DL16m
36	RM8T24DD		S	3	2.0	.80		16m	.40	TTL	.40	2.6	0.0	5.0	30n	380m	5	C	DA10	DL16m
37	N8T14B		S	3	4.5	.40	30k	16m	.40	TTL	.40	2.6	0.0	5.0	30n	380m	0	7	DA2	DL16be
38	HD1-1489		S	4	1.0	1.25		10m	.45	TTL	.45	2.6	0.0	5.0	85n	130m	0	7	DA21	D14-10a
39	RC1489DB		S	4	1.0	1.25	7.0k	10m	.45	TTL	.45	2.6	0.0	5.0	85n	130m	0	7	DA21	DL14q
40	RC1489DC		S	4	1.0	1.25	7.0k	10m	.45	TTL	.45	2.6	0.0	5.0	85n	130m	0	7	DA21	DL14aq
41	96106FC		S	4	1.5	1.3		20m		TTL	.40	2.4	0.0	5.0	35n	200m	0	7	DA55	TO86
42	DS7640J		S	4	1.5	-1.5		16m	.40	TTL	.40	2.4	0.0	5.0	35n	200m	5	C	AA15c	DL14an
43	DS7640W		S	4	1.5	-1.5		16m	.40	TTL	.40	2.4	0.0	5.0	35n	200m	5	C	AA15c	F14-5
44	HD1-1489A		S	4	1.75	1.25		10m	.45	TTL	.45	2.6	0.0	5.0	85n	130m	0	7	DA21	D14-10a
45	RC1489ADB		S	4	1.75	1.25	7.0k	10m	.45	TTL	.45	2.6	0.0	5.0	85n	130m	0	7	DA21	DL14q
46	RC1489ADC		S	4	1.75	1.25	7.0k	10m	.45	TTL	.45	2.6	0.0	5.0	85n	130m	0	7	DA21	DL14aq
47	SG1489J		S	4	1.75	1.25		10m	.45	TTL	.45	2.6	0.0	5.0	85n	130m	0	7	75-189	DL14az
48	75154DC		S	4	2.2	-1.1	7.0k	16m	.40	TTL	.40	2.4	0.0	5.0	22n	376m	0	7	75-154	DL16h
49	DS7836W		S	4	2.25	1.3		16m	.40	TTL	.40	2.4	0.0	5.0	30n	200m	5	C	AA15c	F14-5
50	N8T380A		S	4	2.25	1.3		16m	.40	TTL	.40	2.4	0.0	5.0	35n	210m	0	7	DA55	DL14b
51	SG55154J		S	4	3.0	-3.0	7.0k	16m	.40	TTL	.40	2.4	0.0	5.0	22n	1.0	5	C	DA7	DL16v
52	SG75154J		S	4	3.0	.80	7.0k	16m	.40	TTL	.40	2.4	0.0	5.0	22n	1.0	0	7	DA7	DL16v
53	DS7837W		S	6	2.25	1.3		16m	.40	TTL	.40	2.4	0.0	5.0	30n	300m	5	C	DA60	F16-1
54	N8T37A		S	6	2.25	1.3		16m	.40	TTL	.40	2.4	0.0	5.0	30n	315m	0	7	DA60	DLØ

16. LINE TRANSCEIVERS

IN ORDER OF: (1)TECHN (2)MODE (3)DEV CKTS (4)DRIVER MIN SINK CURR & (5)TYPE NUMBER

LINE No.	5 TYPE NUMBER	DATA SHT.	2 MODE	3 DEVCKTS	4 DRIVER MIN SINK CURR (A)	° OUT (V)	RCVR-INPUT THRESHOLD VOLTAGE HIGH (V)	LOW (V)	MAX RCVR INPUT CURR (A)	1 TECHN	OUTPUT LOGIC LEVELS MAX '0' (V)	MIN '1'	RATED PWR SUPPLY SPAN NEG (V)	POS (V)	MAX PROP DELAY tpd (S)	MAX OPER POWER DISS (W)	OPER TEMP RANGE CODE -	+	DRAWINGS LOGIC OR BLOCK	OUTLINE Δ=MO
1	uA3448ADC		D	4	48m	0.5	1.8	0.8	100u	BIP	0.5	2.5		7.0	25n		0	7	DB50	DL16gd
2	uA3448APC		D	4	48m	0.5	1.8	0.8	100u	BIP	0.5	2.5		7.0	25n		0	7	DB50	DL16ge
3	G74SC545D#ai									CMS	0.8	2.0	0.5	7.0		450m	0	7	E22-13	
4	G74SC545P#ai									CMS	0.8	2.0	0.5	7.0		450m	0	7	E22-13	
5	54SC242C				24m		2.0	0.8	0.1m	CMS	0.4	2.4	0.0	5.0	30n	500m	5	C	74LS242N	DL14cn
6	54SC243C				24m		2.0	0.8	0.1m	CMS	0.4	2.4	0.0	5.0	30n	500m	5	C	74LS243N	DL14cn
7	54SC245C				24m		2.0	0.8	20u	CMS	0.4	2.4	0.0	5.0	30n	500m	5	C	74LS245	DL20ag
8	H74SC242C				24m		2.0	0.8	0.1m	CMS	0.4	2.4	0.0	5.0	18n	500m	0	7	74LS242N	DL14cn
9	H74SC242D				24m		2.0	0.8	0.1m	CMS	0.4	2.4	0.0	5.0	18n	500m	0	7	74LS242N	DL14cm
10	H74SC242P				24m		2.0	0.8	0.1m	CMS	0.4	2.4	0.0	5.0	18n	500m	0	7	74LS242N	DL14ck
11	H74SC243C				24m		2.0	0.8	0.1m	CMS	0.4	2.4	0.0	5.0	18n	500m	0	7	74LS243N	DL14cn
12	H74SC243D				24m		2.0	0.8	0.1m	CMS	0.4	2.4	0.0	5.0	18n	500m	0	7	74LS243N	DL14cm
13	H74SC243P				24m		2.0	0.8	0.1m	CMS	0.4	2.4	0.0	5.0	18n	500m	0	7	74LS243N	DL14ck
14	H74SC245C				24m		2.0	0.8	15u	CMS	0.4	2.4	0.0	5.0	20n	500m	0	7	74LS645N	DL20ag
15	H74SC245D				24m		2.0	0.8	15u	CMS	0.4	2.4	0.0	5.0	20n	500m	0	7	74LS645N	DL20af
16	H74SC245P				24m		2.0	0.8	15u	CMS	0.4	2.4	0.0	5.0	20n	500m	0	7	74LS645N	DL20ae
17	2905FM		D	4	100m	.80	2.0	2.0		CMS	.40	2.4	0.0	5.0			5	C		
18	2905JC		D	4	100m	.80	2.0	2.0		CMS	.40	2.4	0.0	5.0			0	7		
19	2905JM		D	4	100m	.80	2.0	2.0		CMS	.40	2.4	0.0	5.0			5	C		
20	2905NC		D	4	100m	.80	2.0	2.0		CMS	.40	2.4	0.0	5.0			0	7		
21	2906FM		D	4	100m	.80	2.0	2.0		CMS	.40	2.4	0.0	5.0			5	C		
22	2906JC		D	4	100m	.80	2.0	2.0		CMS	.40	2.4	0.0	5.0			0	7		
23	2906JM		D	4	100m	.80	2.0	2.0		CMS	.40	2.4	0.0	5.0			5	C		
24	2906NC		D	4	100m	.80	2.0	2.0		CMS	.40	2.4	0.0	5.0			0	7		
25	2907FM		D	4	100m	.80	2.0	2.0		CMS	.40	2.4	0.0	5.0			5	C		
26	2907JC		D	4	100m	.80	2.0	2.0		CMS	.40	2.4	0.0	5.0			0	7		
27	2907JM		D	4	100m	.80	2.0	2.0		CMS	.40	2.4	0.0	5.0			5	C		
28	2907NC		D	4	100m	.80	2.0	2.0		CMS	.40	2.4	0.0	5.0			0	7		
29	N8T30A		S	2	60m	.40	2.0	.80	80u	TTL	.40	3.0	0.0	5.0	70n	370m	0	7	DB36	DL14b
30	54LS242DM		S	4	12m	.25	2.0	.70	400u	TTL	.40	2.4	0.0	5.0	18n	250m	5	C	74LS242	DL14ao
31	54LS242FM		S	4	12m	.25	2.0	.70	400u	TTL	.40	2.4	0.0	5.0	18n	250m	5	C	54LS242W	TO86
32	54LS243DM		S	4	12m	.25	2.0	.70	400u	TTL	.40	2.4	0.0	5.0	18n	270m	5	C	DB39a	DL14ao
33	54LS243FM		S	4	12m	.25	2.0	.70	400u	TTL	.40	2.4	0.0	5.0	18n	270m	5	C	DB39a	TO86
34	SN74LS242W		S	4	12m	.40	2.0	.80	400u	TTL	.40	2.4	0.0	5.0	18n	250m	0	7	54LS242W	F14-18
35	SN74LS243W		S	4	12m	.40	2.0	.80	400u	TTL	.40	2.4	0.0	5.0	18n	270m	0	7	DB39a	F14-18
36	MC54460L		S	4	16m	.40	2.0	.80	2.0m	TTL	.40	2.4	0.0	5.0	33n	250m	5	C	DB32	DL16e
37	MC74460P		S	4	16m	.40	2.0	.80	2.0m	TTL	.40	2.4	0.0	5.0	33n	250m	0	7	DB32	DL16ad
38	74LS242FC		S	4	24m	.40	2.0	.80	400u	TTL	.40	2.4	0.0	5.0	18n	250m	0	7	54LS242W	TO86
39	74LS243FC		S	4	24m	.40	2.0	.80	400u	TTL	.40	2.4	0.0	5.0	18n	270m	0	7	DB39a	TO86
40	MC8T26L		S	4	40m	.50	2.0	.85	25u	TTL	.50	2.6	0.0	5.25	43n	456m	0	7	DB8	DL16d
41	MC8T26P		S	4	40m	.50	2.0	.80	25u	TTL	.50	2.6	0.0	5.25	43n	456m	0	7	DB8	DL16ad
42	DS8T26AMJ		S	4	48m	.50	2.0	.80	200u	TTL	.50	3.5	0.0	5.0	14n	550m	5	C	DB8	DL16g
43	MC3443P		S	4	48m	.40	1.56	.98	250u	TTL	.40	2.4	0.0	5.0	32n	375m	0	7	DB12	DL16ad
44	MC6889L		S	4	48m	0.50	2.0	0.85	200u	TTL	0.50	2.4		8.0	28n		0	7	DB8a	DL16e
45	MC6889P		S	4	48m	0.50	2.0	0.85	200u	TTL	0.50	2.4		8.0	28n		0	7	DB8a	DL16ad
46	N8T26AB		S	4	48m	.50	2.0	.85	25u	TTL	.50	2.4	0.0	5.0	14n	457m	0	7	DB8	DL16be
47	N8T28B		S	4	48m	.50	2.0	.85	25u	TTL	.50	2.4	0.0	5.0	17n	578m	0	7	DB8a	DL16be
48	XC8T28L		S	4	48m	.50	2.0	.85	25u	TTL	.50	2.4	0.0	5.25	28n	456m	0	7	DB8a	DL16d
49	XC8T28P		S	4	48m	.50	2.0	.85	25u	TTL	.50	2.4	0.0	5.25	28n	456m	0	7	DB8a	DL16ad
50	DS7641W		S	4	50m	.50	1.8	1.2	100u	TTL	.80	2.0	0.0	5.0	30n	350m	5	C	DB14	F16-1
51	DS7833W		S	4	50m	.40	1.75	1.35	80u	TTL	.80	2.0	0.0	5.0	45n	475m	5	C	DB17a	F16-1
52	DS7834W		S	4	50m	.40	1.75	1.35	80u	TTL	.80	2.0	0.0	5.0	35n	475m	5	C	DB18	F16-1
53	DS7835W		S	4	50m	.40	1.75	1.35	80u	TTL	.80	2.0	0.0	5.0	35n	475m	5	C	DB17	F16-1
54	DS7838W		S	4	50m	.40	1.65	1.63	100u	TTL	.80	2.0	0.0	5.0	30n	350m	5	C	DB14	F16-1
55	DS7839W		S	4	50m	.40	1.75	1.35	80u	TTL	.80	2.0	0.0	5.0	45n	475m	5	C	DB19	F16-1
56	N8T34A		S	4	50m	.70	2.2	1.3		TTL	.40	2.4	0.0	5.0	40n	315m	0	7	DB37	DL14b
57	N8T38A		S	4	50m	.70	2.2	1.3	80u	TTL	.40	2.4	0.0	5.0	40n	315m	0	7	DB14	DL∅
58	96103FC		S	4	70m	.70	1.5	1.3		TTL	.40	2.4	0.0	5.0	35n	450m	0	7	DB14	F16-3
59	96103FM		S	4	70m	.70	1.4	1.2		TTL	.40	2.4	0.0	5.0	35n	450m	5	C	DB14	F16-3
60	96103PC		S	4	70m	.70	1.5	1.3		TTL	.40	2.4	0.0	5.0	35n	450m	0	7	DB14	DL16ak
61	6605CJ		S	4	100m	.80	2.0	.80	400u	TTL	.45	2.4	0.0	5.0	50n	320m	0	8	DB28	DL16b
62	6605CL		S	4	100m	.80	2.0	.80	400u	TTL	.45	2.4	0.0	5.0	50n	320m	0	8	DB28	DL16c
63	9640DC		S	4	100m	.80	2.25	1.75	540u	TTL	.50	2.7	0.0	5.0	15n	350m	0	7	DB12	DL16h
64	9640DM		S	4	100m	.80	2.4	1.6	540u	TTL	.50	2.5	0.0	5.0	15n	350m	5	C	DB12	DL16h
65	9640FM		S	4	100m	.80	2.4	1.6	540u	TTL	.50	2.5	0.0	5.0	15n	350m	5	C	DB12	F16-3
66	9640PC		S	4	100m	.80	2.25	1.75	540u	TTL	.50	2.7	0.0	5.0	15n	350m	0	7	DB12	DL16ak
67	9641DC		S	4	100m	.80	2.25	1.75	540u	TTL	.50	2.7	0.0	5.0	19n	400m	0	7	DB38	DL16h
68	9641DC/26S11		S	4	100m	.80	2.0	.80	540u	TTL	.50	2.7	0.0	5.0	20n	400m	0	7	DB38	DL16h
69	9641DM		S	4	100m	.80	2.4	1.6	540u	TTL	.50	2.5	0.0	5.0	19n	400m	5	C	DB38	DL16h
70	9641DM/26S11		S	4	100m	.80	2.0	.80	540u	TTL	.50	2.5	0.0	5.0	20n	400m	5	C	DB38	DL16h
71	9641FM		S	4	100m	.80	2.4	1.6	540u	TTL	.50	2.5	0.0	5.0	19n	400m	5	C	DB38	F16-3
72	9641PC		S	4	100m	.80	2.2	1.75	540u	TTL	.50	2.7	0.0	5.0	19n	400m	0	7	DB38	DL16ak
73	9641PC/26S11		S	4	100m	.80	2.0	.80	540u	TTL	.50	2.7	0.0	5.0	20n	400m	0	7	DB38	DL16ak
74	9642DC		S	4	100m	.80	2.2	1.2	540u	TTL	.50	2.7	0.0	5.0	15n	400m	0	7	DB12	DL16h
75	9642DM		S	4	100m	.80	2.2	1.2	540u	TTL	.50	2.5	0.0	5.0	15n	400m	5	C	DB12	DL16h
76	9642FM		S	4	100m	.80	2.2	1.2	540u	TTL	.50	2.5	0.0	5.0	15n	400m	5	C	DB12	F16-3
77	9642PC		S	4	100m	.80	2.2	1.2	540u	TTL	.50	2.7	0.0	5.0	15n	400m	0	7	DB12	DL16ak
78	DS26S10MW		S	4	100m	.80	2.0	.80	540u	TTL	.50	2.7	0.0	5.0	15n	350m	5	C	DB12	F16-1
79	DS26S11MW		S	4	100m	.80	2.0	.80	540u	TTL	.50	2.7	0.0	5.0	15n	400m	5	C	DB38	F16-1
80	DS8642J		S	4	100m	.45	3.1	1.4	450u	TTL	.80	2.0	0.0	5.0	55n	320m	0	7	DB15	DL16g
81	DS8642N		S	4	100m	.45	3.1	1.4	450u	TTL	.80	2.0	0.0	5.0	55n	320m	0	7	DB15	DL16bv
82	ITT55138J		S	4	100m	.45	3.2	1.5	300u	TTL	.40	2.4	0.0	5.0	32n	325m	5	C	DB12	DL∅
83	ITT55138N		S	4	100m	.45	3.2	1.5	300u	TTL	.40	2.4	0.0	5.0	32n	325m	5	C	DB12	DL∅
84	ITT75138J		S	4	100m	.45	2.9	1.8	300u	TTL	.40	2.4	0.0	5.0	32n	325m	0	7	DB12	DL∅
85	ITT75138N		S	4	100m	.45	2.9	1.8	300u	TTL	.40	2.4	0.0	5.0	32n	325M	0	7	DB12	DL∅
86	SG55138J		S	4	100m	.45	3.2	1.5	300u	TTL	.40	2.4	0.0	5.0	32n	325m	5	C	DB12	DL16e
87	SG75138J		S	4	100m	.45	2.9	1.8	300u	TTL	.40	2.4	0.0	5.0	32n	325m	0	7	DB12	DL16e
88	SN54LS640W		S	8	4.0m	.40	2.0	.70	100u	TTL	.40	2.5	0.0	5.0			5	C	54LS640	F20-1
89	SN54LS641W		S	8	4.0m	.40	2.0	.70	100u	TTL	.40	2.5	0.0	5.0			5	C	74LS245	F20-1
90	SN54LS642W		S	8	4.0m	.40	2.0	.70	100u	TTL	.40	2.5	0.0	5.0			5	C	54LS642	F20-1
91	SN54LS645W		S	8	4.0m	.40	2.0	.70	100u	TTL	.40	2.5	0.0	5.0			5	C	74LS245	F20-1
92	SN74LS640W		S	8	8.0m	.50	2.0	.80	100u	TTL	.50	2.7	0.0	5.0			0	7	54LS640	F20-1
93	SN74LS641W		S	8	8.0m	.50	2.0	.80	100u	TTL	.50	2.7	0.0	5.0			0	7	74LS245	F20-1
94	SN74LS642W		S	8	8.0m	.50	2.0	.80	100u	TTL	.50	2.7	0.0	5.0			0	7	54LS642	F20-1
95	SN74LS645W		S	8	8.0m	.50	2.0	.80	100u	TTL	.50	2.7	0.0	5.0			0	7	74LS245	F20-1
96	SN54LS245W		S	8	12m	.40	2.0	.80	200u	TTL	.40	2.4	0.0	5.0	18n	505m	5	C	54LS245W	F20-1
97	74LS245FC		S	8	24m	.50	2.0	.80	200u	TTL	.50	2.7	0.0	5.0	18n	475m	0	7	54LS245W	TO86
98	SN74LS245W		S	8	24m	.50	2.0	.80	200u	TTL	.40	2.4	0.0	5.0	18n	505m	0	7	54LS245W	F20-1

SYMBOLS AND CODES EXPLAINED IN INTERPRETER

17. SENSE AMPLIFIERS

IN ORDER OF: (1)TECHN (2)CKT/DEV (3)MEM TYPE (4)MIN INP THRESH & (5)TYPE NO.

LINE No.	5 TYPE NUMBER	DATA SHT.	2 CKT PER DEV	3 TYP OF MEM ORY	INPUT THRESHOLD VOLTAGE 4 MIN (V)	MAX (V)	CHN PER CKT	COMM MODE FIRE V P-P (V)	1 TECH N	OUTPUT LOGIC LEVELS MAX '0' (V)	MIN '1' (V)	RATED PWR SUPPLY SPAN NEG (V)	POS (V)	AF DU DN LC	MAX PROP DELAY tpd (S)	MAX OPER POWER DISS. (W)	OPER TEMP RANGE CODE -	+	DRAWINGS LOGIC OR BLOCK	OUTLINE Δ=MO
1	CA1541D		1	COR	14m	20m	2	10		.350	3.0	10	10		30m	750m	5	C		MO001AD
2	HD103461		2	NMS	1.4	1.1	2			-1.6	-.96	5.2	7.5		10n	724m	0	7	DC20	DL16s
3	7521PC		1		33	47	2	5.0	TTL	.40	2.4	5.0	5.0		55n	300m	0	7	DC2	DL16a
4	7523PC		1		33	47	2	5.0	TTL	.40	2.4	5.0	5.0		45n	300m	0	7	75-22	DL16a
5	7520PC		1		36	44	2	5.0	TTL	.40	2.4	5.0	5.0		55n	300m	0	7	DC2	DL16a
6	7522PC		1		36	44	2	5.0	TTL	.40	2.4	5.0	5.0		45n	300m	0	7	75-22	DL16a
7	MC1440F		1	COR	12m	24m	1	10	TTL	.40	5.8	6.0	6.0		50n	250m	5	7	DC11	TO91
8	MC1440G		1	COR	12m	24m	1	10	TTL	.40	5.8	6.0	6.0		50n	250m	5	7	DC11	CN6
9	MC1440L		1	COR	12m	24m	1	10	TTL	.40	5.8	6.0	6.0		50n	250m	5	7	DC11	TO116
10	MC1440P		1	COR	12m	24m	1	10	TTL	.40	5.8	6.0	6.0		50n	250m	5	7	DC11	DL14be
11	MC1441F		1	COR	14m	20m	2	10	TTL	.35	3.0	0.0	5.0		20n	200m	0	7	DC12	F14-4
12	MC1441L		1	COR	14m	20m	2	10	TTL	.35	3.0	0.0	5.0		20n	200m	0	7	DC12	TO116
13	MC1540F		1	COR	14m	20m	1	10	TTL	.35	5.9	6.0	6.0		30n	180m	0	7	DC11	TO91
14	MC1540G		1	COR	14m	20m	1	10	TTL	.35	5.9	6.0	6.0		30n	180m	0	7	DC11	CN6
15	MC1540L		1	COR	14m	20m	1	10	TTL	.35	5.9	6.0	6.0		30n	180m	0	7	DC11	TO116
16	MC1540P		1	COR	14m	20m	1	10	TTL	.35	5.9	6.0	6.0		30n	180m	0	7	DC11	DL14be
17	MC1541F		1	COR	14m	20m	2	10	TTL	.35	3.0	0.0	5.0		20n	200m	5	C	DC12	F14-4
18	MC1541L		1	COR	14m	20m	2	10	TTL	.35	3.0	0.0	5.0		20n	200m	5	C	DC12	TO116
19	DS5521J		1	COR	33m	47m	2	5.0	TTL	.40	2.4	5.0	5.0		55n	265m	5	C	DC2	DL16g
20	DS5523J		1	COR	33m	47m	2	5.0	TTL	.40	2.4	5.0	5.0		45n	270m	5	C	75-22	DL16g
21	DS7521J		1	COR	33m	47m	2	5.0	TTL	.40	2.4	5.0	5.0		55n	265m	0	7	DC2	DL16g
22	DS7521N		1	COR	33m	47m	2	5.0	TTL	.40	2.4	5.0	5.0		55n	265m	0	7	DC2	DL16bv
23	DS7523J		1	COR	33m	47m	2	5.0	TTL	.40	2.4	5.0	5.0		45n	270m	0	7	75-22	DL16g
24	DS7523N		1	COR	33m	47m	2	5.0	TTL	.40	2.4	5.0	5.0		45n	270m	0	7	75-22	DL16bv
25	ITT5521J		1	COR	33m	47m	2	5.0	TTL	.40	2.4	5.0	5.0		55n	265m	5	C	DC2	DL∅
26	ITT5521N		1	COR	33m	47m	2	5.0	TTL	.40	2.4	5.0	5.0		55n	265m	5	C	DC2	DL∅
27	ITT5523J		1	COR	33m	47m	2	5.0	TTL	.40	2.4	5.0	5.0		45n	270m	5	C	75-22	DL∅
28	ITT5523N		1	COR	33m	47m	2	5.0	TTL	.40	2.4	5.0	5.0		45n	270m	5	C	75-22	DL∅
29	ITT7521J		1	COR	33m	47m	2	5.0	TTL	.40	2.4	5.0	5.0		55n	265m	0	7	DC2	DL∅
30	ITT7521N		1	COR	33m	47m	2	5.0	TTL	.40	2.4	5.0	5.0		55n	265m	0	7	DC2	DL∅
31	ITT7523J		1	COR	33m	47m	2	5.0	TTL	.40	2.4	5.0	5.0		45n	270m	0	7	75-22	DL∅
32	ITT7523N		1	COR	33m	47m	2	5.0	TTL	.40	2.4	5.0	5.0		45n	270m	0	7	75-22	DL∅
33	SG7521J		1	COR	33m	47m	2	4.0	TTL	.40	2.4	5.0	5.0		55n	215m	0	7	DC2	DL16z
34	SG7521N		1	COR	33m	47m	2	4.0	TTL	.40	2.4	5.0	5.0		55n	215m	0	7	DC2	DL16bx
35	SG7523J		1	COR	33m	47m	2	4.0	TTL	.40	2.4	5.0	5.0		45n	215m	0	7	75-22	DL16z
36	SG7523N		1	COR	33m	47m	2	4.0	TTL	.40	2.4	5.0	5.0		45n	215m	0	7	75-22	DL16bx
37	ITT5520J		1	COR	35m	45m	2	5.0	TTL	.40	2.4	5.0	5.0		55n	265m	5	C	DC2	DL∅
38	ITT5520N		1	COR	35m	45m	2	5.0	TTL	.40	2.4	5.0	5.0		55n	265m	5	C	DC2	DL∅
39	ITT5522J		1	COR	35m	45m	2	5.0	TTL	.40	2.4	5.0	5.0		45n	270m	5	C	75-22	DL∅
40	ITT5522N		1	COR	35m	45m	2	5.0	TTL	.40	2.4	5.0	5.0		45n	270m	5	C	75-22	DL∅
41	SN5526J		1	COR	35m	45m	2	5.0	TTL	.40	2.4	5.0	5.0		45n	300m	5	C	DC5	DL16ab
42	7520B		1	COR	36m	44m	2		TTL	.40	2.4	5.0	5.0		40n	500m	0	7	DC2	DL16be
43	7522B		1	COR	36m	44m	2		TTL	.40	2.4	5.0	5.0		45n	500m	0	7	75-22	DL16be
44	DS5520J		1	COR	36m	44m	2	5.0	TTL	.40	2.4	5.0	5.0		55n	265m	5	C	DC2	DL16g
45	DS5522J		1	COR	36m	44m	2	5.0	TTL	.40	2.4	5.0	5.0		45n	270m	5	C	75-22	DL16g
46	DS5522W		1	COR	36m	44m	2	5.0	TTL	.40	2.4	5.0	5.0		45n	270m	5	C	75-22	F16-1
47	DS7520J		1	COR	36m	44m	2	5.0	TTL	.40	2.4	5.0	5.0		55n	265m	0	7	DC2	DL16g
48	DS7520N		1	COR	36m	44m	2	5.0	TTL	.40	2.4	5.0	5.0		55n	265m	0	7	DC2	DL16bv
49	DS7522J		1	COR	36m	44m	2	5.0	TTL	.40	2.4	5.0	5.0		45n	270m	0	7	75-22	DL16g
50	DS7522N		1	COR	36m	44m	2	5.0	TTL	.40	2.4	5.0	5.0		45n	270m	0	7	75-22	DL16bv
51	ITT7520J		1	COR	36m	44m	2	5.0	TTL	.40	2.4	5.0	5.0		55n	265m	0	7	DC2	DL∅
52	ITT7520N		1	COR	36m	44m	2	5.0	TTL	.40	2.4	5.0	5.0		55n	265m	0	7	DC2	DL∅
53	ITT7522J		1	COR	36m	44m	2	5.0	TTL	.40	2.4	5.0	5.0		45n	270m	0	7	75-22	DL∅
54	ITT7522N		1	COR	36m	44m	2	5.0	TTL	.40	2.4	5.0	5.0		45n	270m	0	7	75-22	DL∅
55	SG7520J		1	COR	36m	44m	2	4.0	TTL	.40	2.4	5.0	5.0		55n	215m	0	7	DC2	DL16z
56	SG7520N		1	COR	36m	44m	2	4.0	TTL	.40	2.4	5.0	5.0		55n	215m	0	7	DC2	DL16bx
57	SG7522J		1	COR	36m	44m	2	4.0	TTL	.40	2.4	5.0	5.0		45n	215m	0	7	75-22	DL16z
58	SG7522N		1	COR	36m	44m	2	4.0	TTL	.40	2.4	5.0	5.0		45n	215m	0	7	75-22	DL16bx
59	SN7526J		1	COR	36m	44m	2	5.0	TTL	.40	2.4	5.0	5.0		45n	300m	0	7	DC5	DL16ab
60	SN7526N		1	COR	36m	44m	2	5.0	TTL	.40	2.4	5.0	5.0		45n	300m	0	7	DC5	DL16ac
61	55S20DM		1	COR	37m	43m	2	5.0	TTL	.40	2.4	5.0	5.0		55n	300m	5	C	DC2	DL16h
62	75S20DC		1	COR	37m	43m	2	5.0	TTL	.40	2.4	5.0	5.0		55n	300m	0	7	DC2	DL16h
63	75S20PC		1	COR	37m	43m	2	5.0	TTL	.40	2.4	5.0	5.0		55n	300m	0	7	DC2	DL16ak
64	DS5520AJ		1	COR	38m	42m	2	5.0	TTL	.40	2.4	5.0	5.0		55n	265m	5	C	DC2	DL16g
65	DS5522AJ		1	COR	38m	42m	2	5.0	TTL	.40	2.4	5.0	5.0		45n	270m	5	C	75-22	DL16g
66	DS7520AJ		1	COR	38m	42m	2	5.0	TTL	.40	2.4	5.0	5.0		55n	265m	0	7	DC2	DL16g
67	DS7520AN		1	COR	38m	42m	2	5.0	TTL	.40	2.4	5.0	5.0		55n	265m	0	7	DC2	DL16bv
68	DS7522AJ		1	COR	38m	42m	2	5.0	TTL	.40	2.4	5.0	5.0		45n	270m	0	7	75-22	DL16g
69	DS7522AN		1	COR	38m	42m	2	5.0	TTL	.40	2.4	5.0	5.0		45n	270m	0	7	75-22	DL16bv
70	MC1544L		1	PLW	500u	1.5m	4	11	TTL	.50	2.4	6.0	5.0		25n	180m	5	C	DC14	DL16e
71	SN55244J		1	PLW	700m		4	5.0	TTL	.50	2.4	6.0	5.0		25n	330m	5	C	DC10	DL16ab
72	SN55244JA		1	PLW	700m		4	5.0	TTL	.50	2.4	6.0	5.0		25n	330m	5	C	DC10	D16-11
73	SN55244N		1	PLW	700m		4	5.0	TTL	.50	2.4	6.0	5.0		25n	330m	5	C	DC10	DL16ac
74	SN75244J		1	PLW	700m		4	5.0	TTL	.50	2.4	6.0	5.0		25n	330m	0	7	DC10	DL16ab
75	SN75244JA		1	PLW	700m		4	5.0	TTL	.50	2.4	6.0	5.0		25n	330m	0	7	DC10	D16-11
76	SN75244N		1	PLW	700m		4	5.0	TTL	.50	2.4	6.0	5.0		25n	330m	0	7	DC10	DL16ac
77	SN75236W		2	COR	4.0m	10m	1	3.0	TTL	.40	2.4	5.0	5.0	R	200n	365m	0	7	DC9	Δ019AA
78	SN55236W		2	COR	5.0m	9.0m	1	3.0	TTL	.40	2.4	5.0	5.0	R	200n	365m	5	C	DC9	Δ019AA
79	MC1543L		2	COR	17m	23m	1	10	TTL	1.46	.85	5.2	5.0		35n	230m	5	C	DC13	TO116
80	5525DM		2	COR	33m	47m	1	5.0	TTL	.40	2.4	5.0	5.0		40n	300m	5	C	DC7a	DL16h
81	5525FM		2	COR	33m	47m	1	5.0	TTL	.40	2.4	5.0	5.0		40n	300m	5	C	DC7a	F16-3
82	5529DM		2	COR	33m	47m	1	5.0	TTL	.40	2.4	5.0	5.0		40n	300m	5	C	DC8a	DL16h
83	5529FM		2	COR	33m	47m	1	5.0	TTL	.40	2.4	5.0	5.0		40n	300m	5	C	DC8a	F16-3
84	5535DM		2	COR	33m	47m	1	5.0	TTL	.40		5.0	5.0		40n	280m	5	C	DC5a	DL16h
85	5535FM		2	COR	33m	47m	1	5.0	TTL	.40		5.0	5.0		40n	280m	5	C	DC5a	F16-3
86	5539DM		2	COR	33m	47m	1	5.0	TTL	.40		5.0	5.0		40n	300m	5	C	DC8	DL16h
87	5539FM		2	COR	33m	47m	1	5.0	TTL	.40		5.0	5.0		40n	300m	5	C	DC8	F16-3
88	7525DC		2	COR	33m	47m	1	5.0	TTL	.40	2.4	5.0	5.0		40n	300m	0	7	DC7a	DL16h
89	7525PC		2	COR	33m	47m	1	5.0	TTL	.40	2.4	5.0	5.0		40n	300m	0	7	DC7a	DL16ak
90	7529DC		2	COR	33m	47m	1	5.0	TTL	.40	2.4	5.0	5.0		40n	300m	0	7	DC8a	DL16h
91	7529PC		2	COR	33m	47m	1	5.0	TTL	.40	2.4	5.0	5.0		40n	300m	0	7	DC8a	DL16ak
92	7535DC		2	COR	33m	47m	1	5.0	TTL	.40		5.0	5.0		40n	280m	0	7	DC5a	DL16h
93	7535PC		2	COR	33m	47m	1	5.0	TTL	.40		5.0	5.0		40n	280m	0	7	DC5a	DL16ak
94	7539DC		2	COR	33m	47m	1	5.0	TTL	.40		5.0	5.0		40n	300m	0	7	DC8	DL16h
95	7539PC		2	COR	33m	47m	1	5.0	TTL	.40		5.0	5.0		40n	300m	0	7	DC8	DL16ak
96	55225DM		2	COR	33m	47m	1	5.0	TTL	.40	2.4	5.0	5.0		40n	300m	5	C	DC27	DL16h
97	55225FM		2	COR	33m	47m	1	5.0	TTL	.40	2.4	5.0	5.0		40n	300m	5	C	DC27	F16-3
98	55233DM		2	COR	33m	47m	1	5.0	TTL	.40		5.0	5.0		40n	300m	5	C	DC7	DL16h
99	55233FM		2	COR	33m	47m	1	5.0	TTL	.40		5.0	5.0		40n	300m	5	C	DC7	F16-3
100	55235DM		2	COR	33m	47m	1	5.0	TTL	.40	2.4	5.0	5.0		40n	300m	5	C	DC7	DL16h
101	55235FM		2	COR	33m	47m	1	5.0	TTL	.40	2.4	5.0	5.0		40n	300m	5	C	DC7	F16-3
102	55239DM		2	COR	33m	47m	1	5.0	TTL	.40	2.4	5.0	5.0		40n	300m	5	C	DC8	DL16h
103	55239FM		2	COR	33m	47m	1	5.0	TTL	.40	2.4	5.0	5.0		40n	300m	5	C	DC8	F16-3
104	75225DC		2	COR	33m	47m	1	5.0	TTL	.40	2.4	5.0	5.0		40n	300m	0	7	DC27	DL16h
105	75225PC		2	COR	33m	47m	1	5.0	TTL	.40	2.4	5.0	5.0		40n	300m	0	7	DC27	DL16ak
106	75233DC		2	COR	33m	47m	1	5.0	TTL	.40		5.0	5.0		40n	300m	0	7	DC7	DL16h
107	75233PC		2	COR	33m	47m	1	5.0	TTL	.40		5.0	5.0		40n	300m	0	7	DC7	DL16ak
108	75235DC		2	COR	33m	47m	1	5.0	TTL	.40	2.4	5.0	5.0		40n	300m	0	7	DC7	DL16h
109	75235PC		2	COR	33m	47m	1	5.0	TTL	.40	2.4	5.0	5.0		40n	300m	0	7	DC7	DL16ak
110	75239DC		2	COR	33m	47m	1	5.0	TTL	.40	2.4	5.0	5.0		40n	300m	0	7	DC8	DL16h

SYMBOLS AND CODES EXPLAINED IN INTERPRETER

17. SENSE AMPLIFIERS

IN ORDER OF: (1)TECHN (2)CKT/DEV (3)MEM TYPE (4)MIN INP THRESH & (5)TYPE NO.

LINE No.	5 TYPE NUMBER	DATA SHT.	2 CKT PER DEV	3 TYP OF MEM ORY	INPUT THRESHOLD VOLTAGE 4 MIN (V)	MAX (V)	CHN PER CKT	COMM MODE FIRE V P-P (V)	1 TECHN	OUTPUT LOGIC LEVELS MAX '0' (V)	MIN '1' (V)	RATED PWR SUPPLY SPAN NEG (V)	POS (V)	AF DU DN LC	MAX PROP DELAY tpd (S)	MAX OPER POWER DISS. (W)	OPER TEMP RANGE CODE -	+	DRAWINGS LOGIC OR BLOCK	OUTLINE Δ=MO
1	75239PC		2	COR	33m	47m	1	5.0	TTL	.40	2.4	5.0	5.0		40n	300m	0	7	DC8	DL16ak
2	DS5525J		2	COR	33m	47m	1	5.0	TTL	.40	2.4	5.0	5.0		40n	290m	5	C	DC7a	DL16g
3	DS5529J		2	COR	33m	47m	1	5.0	TTL	.40	2.4	5.0	5.0		40n	290m	5	C	DC8a	DL16g
4	DS5535J		2	COR	33m	47m	1	5.0	TTL	.40	2.4	5.0	5.0		40n	280m	5	C	DC7	DL16g
5	DS5539J		2	COR	33m	47m	1	5.0	TTL	.40	2.4	5.0	5.0		40n	280m	5	C	DC8	DL16g
6	DS7525J		2	COR	33m	47m	1	5.0	TTL	.40	2.4	5.0	5.0		40n	290m	0	7	DC7a	DL16g
7	DS7525N		2	COR	33m	47m	1	5.0	TTL	.40	2.4	5.0	5.0		40n	290m	0	7	DC7a	DL16bv
8	DS7529J		2	COR	33m	47m	1	5.0	TTL	.40	2.4	5.0	5.0		40n	290m	0	7	DC8a	DL16g
9	DS7529N		2	COR	33m	47m	1	5.0	TTL	.40	2.4	5.0	5.0		40n	290m	0	7	DC8a	DL16bv
10	DS7535J		2	COR	33m	47m	1	5.0	TTL	.40	2.4	5.0	5.0		40n	280m	0	7	DC7	DL16g
11	DS7535N		2	COR	33m	47m	1	5.0	TTL	.40	2.4	5.0	5.0		40n	280m	0	7	DC7	DL16bv
12	DS7539J		2	COR	33m	47m	1	5.0	TTL	.40	2.4	5.0	5.0		40n	280m	0	7	DC8	DL16g
13	DS7539N		2	COR	33m	47m	1	5.0	TTL	.40	2.4	5.0	5.0		40n	280m	0	7	DC8	DL16bv
14	ITT5525J		2	COR	33m	47m	1	5.0	TTL	.40	2.4	5.0	5.0		40n	290m	5	C	DC7a	DLØ
15	ITT5525N		2	COR	33m	47m	1	5.0	TTL	.40	2.4	5.0	5.0		40n	290m	5	C	DC7a	DLØ
16	ITT5529J		2	COR	33m	47m	1	5.0	TTL	.40	2.4	5.0	5.0		40n	290m	5	C	DC8a	DLØ
17	ITT5529N		2	COR	33m	47m	1	5.0	TTL	.40	2.4	5.0	5.0		40n	290m	5	C	DC8a	DLØ
18	ITT7525J		2	COR	33m	47m	1	5.0	TTL	.40	2.4	5.0	5.0		40n	290m	0	7	DC7a	DLØ
19	ITT7525N		2	COR	33m	47m	1	5.0	TTL	.40	2.4	5.0	5.0		40n	290m	0	7	DC7a	DLØ
20	ITT7529J		2	COR	33m	47m	1	5.0	TTL	.40	2.4	5.0	5.0		40n	290m	0	7	DC8a	DLØ
21	ITT7529N		2	COR	33m	47m	1	5.0	TTL	.40	2.4	5.0	5.0		40n	290m	0	7	DC8a	DLØ
22	ITT55235J		2	COR	33m	47m	1	5.0	TTL	.40	2.4	5.0	5.0		50n	290m	5	C	DC7	DL16bf
23	ITT75235J		2	COR	33m	47m	1	5.0	TTL	.40	2.4	5.0	5.0		50n	290m	0	7	DC7	DL16bf
24	MC5523L		2	COR	33m	47m	2	6.0	TTL	.40	2.4	5.0	5.0		45n	200m	5	C	DC15	DL16e
25	MC5525L		2	COR	33m	47m	2	6.0	TTL	.40	2.4	5.0	5.0		40n	200m	5	C	DC5b	DL16e
26	MC5529L		2	COR	33m	47m	1	5.0	TTL	.40	2.4	5.0	5.0		40n	200m	5	C	DC6a	DL16e
27	MC5535L		2	COR	33m	47m	1	5.0	TTL	.40		5.0	5.0		40n	190m	5	C	DC7a	DL16e
28	MC5539L		2	COR	33m	47m	1	5.0	TTL	.40		5.0	5.0		40n	190m	5	C	DC8a	DL16e
29	MC7523L		2	COR	33m	47m	2	6.0	TTL	.40	2.4	5.0	5.0		45n	200m	0	7	DC15	DL16e
30	MC7523P		2	COR	33m	47m	2	6.0	TTL	.40	2.4	5.0	5.0		45n	200m	0	7	DC15	DL16ad
31	MC7525L		2	COR	33m	47m	1	6.0	TTL	.40	2.4	5.0	5.0		40n	200m	0	7	DC5b	DL16e
32	MC7525P		2	COR	33m	47m	1	6.0	TTL	.40	2.4	5.0	5.0		40n	200m	0	7	DC5b	DL16ad
33	MC7529L		2	COR	33m	47m	1	5.0	TTL	.40	2.4	5.0	5.0		40n	200m	0	7	DC6a	DL16e
34	MC7529P		2	COR	33m	47m	1	5.0	TTL	.40	2.4	5.0	5.0		40n	200m	0	7	DC6a	DL16ad
35	MC7535L		2	COR	33m	47m	1	5.0	TTL	.40		5.0	5.0		40n	190m	0	7	DC7a	DL16e
36	MC7535P		2	COR	33m	47m	1	5.0	TTL	.40		5.0	5.0		40n	190m	0	7	DC7a	DL16ad
37	MC7539L		2	COR	33m	47m	1	5.0	TTL	.40		5.0	5.0		40n	190m	0	7	DC8a	DL16e
38	MC7539P		2	COR	33m	47m	1	5.0	TTL	.40		5.0	5.0		40n	190m	0	7	DC8a	DL16ad
39	SG7525J		2	COR	33m	47m	1	4.0	TTL	.40	2.4	5.0	5.0		40n	215m	0	7	DC5b	DL16z
40	SG7525N		2	COR	33m	47m	1	4.0	TTL	.40	2.4	5.0	5.0		40n	215m	0	7	DC5b	DL16bx
41	SG7529J		2	COR	33m	47m	1	4.0	TTL	.40	2.4	5.0	5.0		40n	215m	0	7	DC6a	DL16z
42	SG7529N		2	COR	33m	47m	1	4.0	TTL	.40	2.4	5.0	5.0		40n	215m	0	7	DC6a	DL16bx
43	SG7535J		2	COR	33m	47m	1	4.0	TTL	.40	2.4	5.0	5.0		40n	215m	0	7	DC7a	DL16z
44	SG7535N		2	COR	33m	47m	1	4.0	TTL	.40	2.4	5.0	5.0		40n	215m	0	7	DC7a	DL16bx
45	SG7539J		2	COR	33m	47m	1	4.0	TTL	.40	2.4	5.0	5.0		40n	215m	0	7	DC8a	DL16z
46	SG7539N		2	COR	33m	47m	1	4.0	TTL	.40	2.4	5.0	5.0		40n	215m	0	7	DC8a	DL16bx
47	5524DM		2	COR	35m	45m	1	5.0	TTL	.40	2.4	5.0	5.0		40n	300m	5	C	DC7a	DL16h
48	5524FM		2	COR	35m	45m	1	5.0	TTL	.40	2.4	5.0	5.0		40n	300m	5	C	DC7a	F16-3
49	5528FM		2	COR	35m	45m	1	5.0	TTL	.40	2.4	5.0	5.0		40n	300m	5	C	DC8a	F16-3
50	5534DM		2	COR	35m	45m	1	5.0	TTL	.40		5.0	5.0		40n	280m	5	C	DC5a	DL16h
51	5534FM		2	COR	35m	45m	1	5.0	TTL	.40		5.0	5.0		40n	280m	5	C	DC5a	F16-3
52	5538DM		2	COR	35m	45m	1	5.0	TTL	.40		5.0	5.0		40n	300m	5	C	DC8	DL16h
53	5538FM		2	COR	35m	45m	1	5.0	TTL	.40		5.0	5.0		40n	300m	5	C	DC8	F16-3
54	55224DM		2	COR	35m	45m	1	5.0	TTL	.40	2.4	5.0	5.0		40n	300m	5	C	DC27	DL16h
55	55224FM		2	COR	35m	45m	1	5.0	TTL	.40	2.4	5.0	5.0		40n	300m	5	C	DC27	F16-3
56	55232DM		2	COR	35m	45m	1	5.0	TTL	.40	2.4	5.0	5.0		40n	300m	5	C	DC7	DL16h
57	55232FM		2	COR	35m	45m	1	5.0	TTL	.40		5.0	5.0		40n	300m	5	C	DC7	F16-3
58	55234DM		2	COR	35m	45m	1	5.0	TTL	.40	2.4	5.0	5.0		40n	300m	5	C	DC7	DL16h
59	55234FM		2	COR	35m	45m	1	5.0	TTL	.40	2.4	5.0	5.0		40n	300m	5	C	DC7	F16-3
60	55238FM		2	COR	35m	45m	1	5.0	TTL	.40	2.4	5.0	5.0		40n	300m	5	C	DC8	F16-3
61	ITT5524J		2	COR	35m	45m	1	5.0	TTL	.40	2.4	5.0	5.0		40n	290m	5	C	DC7a	DLØ
62	ITT5524N		2	COR	35m	45m	1	5.0	TTL	.40	2.4	5.0	5.0		40n	290m	5	C	DC7a	DLØ
63	ITT5528J		2	COR	35m	45m	1	5.0	TTL	.40	2.4	5.0	5.0		40n	290m	5	C	DC8a	DLØ
64	ITT5528N		2	COR	35m	45m	1	5.0	TTL	.40	2.4	5.0	5.0		40n	290m	5	C	DC8a	DLØ
65	ITT55234J		2	COR	35m	45m	1	5.0	TTL	.40	2.4	5.0	5.0		50n	290m	5	C	DC7	DL16bf
66	MC5522L		2	COR	35m	45m	2	6.0	TTL	.40	2.4	5.0	5.0		45n	200m	5	C	DC15	DL16e
67	MC5524L		2	COR	35m	45m	2	6.0	TTL	.40	2.4	5.0	5.0		40n	200m	5	C	DC5b	DL16e
68	MC5528L		2	COR	35m	45m	1	5.0	TTL	.40	2.4	5.0	5.0		40n	200m	5	C	DC6a	DL16e
69	MC5534L		2	COR	35m	45m	1	5.0	TTL	.40		5.0	5.0		40n	190m	5	C	DC7a	DL16e
70	MC5538L		2	COR	35m	45m	1	5.0	TTL	.40		5.0	5.0		40n	190m	5	C	DC8a	DL16e
71	7524B		2	COR	36m	44m	1		TTL	.40	2.4	5.0	5.0		40n	500m	0	7	DC7a	DL16be
72	7524DC		2	COR	36m	44m	1	5.0	TTL	.40	2.4	5.0	5.0		40n	300m	0	7	DC7a	DL16h
73	7524PC		2	COR	36m	44m	1	5.0	TTL	.40	2.4	5.0	5.0		40n	300m	0	7	DC7a	DL16ak
74	7528DC		2	COR	36m	44m	1	5.0	TTL	.40	2.4	5.0	5.0		40n	300m	0	7	DC8a	DL16h
75	7532F		2	COR	36m	44m	1	5.0	TTL	.40	2.4	5.0	5.0		40n	300m	0	7	DC36	DL16j
76	7532N		2	COR	36m	44m	1	5.0	TTL	.40	2.4	5.0	5.0		40n	300m	0	7	DC36	DL16be
77	7534DC		2	COR	36m	44m	1	5.0	TTL	.40		5.0	5.0		40n	280m	0	7	DC5a	DL16h
78	7534F		2	COR	36m	44m	1	5.0	TTL	.40	2.4	5.0	5.0		40n	300m	0	7	DC36	DL16j
79	7534N		2	COR	36m	44m	1	5.0	TTL	.40	2.4	5.0	5.0		40n	300m	0	7	DC36	DL16be
80	7534PC		2	COR	36m	44m	1	5.0	TTL	.40		5.0	5.0		40n	280m	0	7	DC5a	DL16ak
81	7538DC		2	COR	36m	44m	1	5.0	TTL	.40		5.0	5.0		40n	300m	0	7	DC8	DL16h
82	7538PC		2	COR	36m	44m	1	5.0	TTL	.40		5.0	5.0		40n	300m	0	7	DC8	DL16ak
83	55238DM		2	COR	36m	44m	1	5.0	TTL	.40	2.4	5.0	5.0		40n	300m	5	C	DC8	DL16h
84	75224DC		2	COR	36m	44m	1	5.0	TTL	.40	2.4	5.0	5.0		40n	300m	0	7	DC27	DL16h
85	75224PC		2	COR	36m	44m	1	5.0	TTL	.40	2.4	5.0	5.0		40n	300m	0	7	DC27	DL16ak
86	75232DC		2	COR	36m	44m	1	5.0	TTL	.40		5.0	5.0		40n	300m	0	7	DC7	DL16h
87	75232PC		2	COR	36m	44m	1	5.0	TTL	.40		5.0	5.0		40n	300m	0	7	DC7	DL16ak
88	75234DC		2	COR	36m	44m	1	5.0	TTL	.40	2.4	5.0	5.0		40n	300m	0	7	DC7	DL16h
89	75234PC		2	COR	36m	44m	1	5.0	TTL	.40	2.4	5.0	5.0		40n	300m	0	7	DC7	DL16ak
90	75238DC		2	COR	36m	44m	1	5.0	TTL	.40	2.4	5.0	5.0		40n	300m	0	7	DC8	DL16h
91	75238PC		2	COR	36m	44m	1	5.0	TTL	.40	2.4	5.0	5.0		40n	300m	0	7	DC8	DL16ak
92	DS5524J		2	COR	36m	44m	1	5.0	TTL	.40	2.4	5.0	5.0		45n	290m	5	C	DC7a	DL16g
93	DS5528J		2	COR	36m	44m	1	5.0	TTL	.40	2.4	5.0	5.0		45n	290m	5	C	DC8a	DL16g
94	DS5534J		2	COR	36m	44m	1	5.0	TTL	.40	2.4	5.0	5.0		44n	280m	5	C	75-34	DL16g
95	DS5538J		2	COR	36m	44m	1	5.0	TTL	.40	2.4	5.0	5.0		45n	280m	5	C	75-38	DL16g
96	DS7524J		2	COR	36m	44m	1	5.0	TTL	.40	2.4	5.0	5.0		45n	290m	0	7	DC7a	DL16g
97	DS7524N		2	COR	36m	44m	1	5.0	TTL	.40	2.4	5.0	5.0		45n	290m	0	7	DC7a	DL16bv
98	DS7528J		2	COR	36m	44m	1	5.0	TTL	.40	2.4	5.0	5.0		45n	290m	0	7	DC8a	DL16g
99	DS7528N		2	COR	36m	44m	1	5.0	TTL	.40	2.4	5.0	5.0		45n	290m	0	7	DC8a	DL16bv
100	DS7534J		2	COR	36m	44m	1	5.0	TTL	.40	2.4	5.0	5.0		44n	280m	0	7	DC7	DL16g
101	DS7534N		2	COR	36m	44m	1	5.0	TTL	.40	2.4	5.0	5.0		45n	280m	0	7	DC7	DL16bv
102	DS7538J		2	COR	36m	44m	1	5.0	TTL	.40	2.4	5.0	5.0		45n	280m	0	7	DC8	DL16g
103	DS7538N		2	COR	36m	44m	1	5.0	TTL	.40	2.4	5.0	5.0		45n	280m	0	7	DC8	DL16bv
104	ITT7524J		2	COR	36m	44m	1	5.0	TTL	.40	2.4	5.0	5.0		40n	290m	0	7	DC7a	DLØ
105	ITT7524N		2	COR	36m	44m	1	5.0	TTL	.40	2.4	5.0	5.0		40n	290m	0	7	DC7a	DLØ
106	ITT7528J		2	COR	36m	44m	1	5.0	TTL	.40	2.4	5.0	5.0		40n	290m	0	7	DC8a	DLØ
107	ITT7528N		2	COR	36m	44m	1	5.0	TTL	.40	2.4	5.0	5.0		40n	290m	0	7	DC8a	DLØ
108	ITT75234J		2	COR	36m	44m	1	5.0	TTL	.40	2.4	5.0	5.0		50n	290m	0	7	DC7	DL16bf
109	MC7522L		2	COR	36m	44m	2	6.0	TTL	.40	2.4	5.0	5.0		45n	200m	0	7	DC15	DL16e
110	MC7522P		2	COR	36m	44m	2	6.0	TTL	.40	2.4	5.0	5.0		45n	200m	0	7	DC15	DL16ad

SYMBOLS AND CODES EXPLAINED IN INTERPRETER

17. SENSE AMPLIFIERS

IN ORDER OF: (1)TECHN (2)CKT/DEV (3)MEM TYPE (4)MIN INP THRESH & (5)TYPE NO.

LINE No.	5 TYPE NUMBER	DATA SHT.	2 CKT PER DEV	3 TYP OF MEMORY	INPUT THRESHOLD VOLTAGE 4 MIN (V)	MAX (V)	CHN PER CKT	COMM MODE FIRE V P-P (V)	1 TECHN	OUTPUT LOGIC LEVELS MAX '0' (V)	MIN '1' (V)	RATED PWR SUPPLY SPAN NEG (V)	POS (V)	AF DU DN LC	MAX PROP DELAY tpd (S)	MAX OPER POWER DISS. (W)	OPER TEMP RANGE CODE -	+	DRAWINGS LOGIC OR BLOCK	OUTLINE Δ=MO
1	MC7524L		2	COR	36m	44m	1	6.0	TTL	.40	2.4	5.0	5.0		40n	200m	0	7	DC5b	DL16e
2	MC7524P		2	COR	36m	44m	1	6.0	TTL	.40	2.4	5.0	5.0		40n	200m	0	7	DC5b	DL16ad
3	MC7528L		2	COR	36m	44m	1	5.0	TTL	.40	2.4	5.0	5.0		40n	200m	0	7	DC6a	DL16e
4	MC7528P		2	COR	36m	44m	1	5.0	TTL	.40	2.4	5.0	5.0		40n	200m	0	7	DC6a	DL16ad
5	MC7534L		2	COR	36m	44m	1	5.0	TTL	.40		5.0	5.0		40n	190m	0	7	DC7a	DL16e
6	MC7534P		2	COR	36m	44m	1	5.0	TTL	.40		5.0	5.0		40n	190m	0	7	DC7a	DL16ad
7	MC7538L		2	COR	36m	44m	1	5.0	TTL	.40		5.0	5.0		40n	190m	0	7	DC8a	DL16e
8	MC7538P		2	COR	36m	44m	1	5.0	TTL	.40		5.0	5.0		40n	190m	0	7	DC8a	DL16ad
9	SG7524J		2	COR	36m	44m	1	4.0	TTL	.40	2.4	5.0	5.0		40n	215m	0	7	DC5b	DL16z
10	SG7524N		2	COR	36m	44m	1	4.0	TTL	.40	2.4	5.0	5.0		40n	215m	0	7	DC5b	DL16bx
11	SG7528J		2	COR	36m	44m	1	4.0	TTL	.40	2.4	5.0	5.0		40n	215m	0	7	DC6a	DL16z
12	SG7528N		2	COR	36m	44m	1	4.0	TTL	.40	2.4	5.0	5.0		40n	215m	0	7	DC6a	DL16bx
13	SG7534J		2	COR	36m	44m	1	4.0	TTL	.40	2.4	5.0	5.0		40n	215m	0	7	DC7a	DL16z
14	SG7534N		2	COR	36m	44m	1	4.0	TTL	.40	2.4	5.0	5.0		40n	215m	0	7	DC7a	DL16bx
15	SG7538J		2	COR	36m	44m	1	4.0	TTL	.40	2.4	5.0	5.0		40n	215m	0	7	DC8a	DL16z
16	SG7538N		2	COR	36m	44m	1	4.0	TTL	.40	2.4	5.0	5.0		40n	215m	0	7	DC8a	DL16bx
17	55S24DM		2	COR	37m	43m	1	5.0	TTL	.40	2.4	5.0	5.0		40n	300m	5	C	DC7a	DL16h
18	55S234DM		2	COR	37m	43m	1	5.0	TTL	.40	2.4	5.0	5.0		40n	300m	5	C	DC7	DL16h
19	75S24DC		2	COR	37m	43m	1	5.0	TTL	.40	2.4	5.0	5.0		40n	300m	0	7	DC7a	DL16h
20	75S24PC		2	COR	37m	43m	1	5.0	TTL	.40	2.4	5.0	5.0		40n	300m	0	7	DC7a	DL16ak
21	75S234DC		2	COR	37m	43m	1	5.0	TTL	.40	2.4	5.0	5.0		40n	300m	0	7	DC7	DL16h
22	75S234PC		2	COR	37m	43m	1	5.0	TTL	.40	2.4	5.0	5.0		40n	300m	0	7	DC7	DL16ak
23	DS5524AJ		2	COR	38m	42m	1	5.0	TTL	.40	2.4	5.0	5.0		40n	290m	5	C	DC7a	DL16g
24	DS5528AJ		2	COR	38m	42m	1	5.0	TTL	.40	2.4	5.0	5.0		40n	290m	5	C	DC8a	DL16g
25	DS5534AJ		2	COR	38m	42m	1	5.0	TTL	.40	2.4	5.0	5.0		40n	280m	5	C	DC7	DL16g
26	DS5538AJ		2	COR	38m	42m	1	5.0	TTL	.40	2.4	5.0	5.0		40n	280m	5	C	DC8	DL16g
27	DS7524AJ		2	COR	38m	42m	1	5.0	TTL	.40	2.4	5.0	5.0		40n	290m	0	7	DC7a	DL16g
28	DS7524AN		2	COR	38m	42m	1	5.0	TTL	.40	2.4	5.0	5.0		40n	290m	0	7	DC7a	DL16bv
29	DS7528AJ		2	COR	38m	42m	1	5.0	TTL	.40	2.4	5.0	5.0		40n	290m	0	7	DC8a	DL16g
30	DS7528AN		2	COR	38m	42m	1	5.0	TTL	.40	2.4	5.0	5.0		40n	290m	0	7	DC8a	DL16bv
31	DS7534AJ		2	COR	38m	42m	1	5.0	TTL	.40	2.4	5.0	5.0		40n	280m	0	7	DC7	DL16g
32	DS7534AN		2	COR	38m	42m	1	5.0	TTL	.40	2.4	5.0	5.0		40n	280m	0	7	DC7	DL16bv
33	DS7538AJ		2	COR	38m	42m	1	5.0	TTL	.40	2.4	5.0	5.0		40n	280m	0	7	DC8	DL16g
34	DS7538AN		2	COR	38m	42m	1	5.0	TTL	.40	2.4	5.0	5.0		40n	280m	0	7	DC8	DL16bv
35	55207DM		2	MOS	10m	5.0	1	6.0	TTL	.40	2.4	5.0	5.0		35n	225m	5	C	DC1	DL14ao
36	55207FM		2	MOS	10m	5.0	1	6.0	TTL	.40	2.4	5.0	5.0		35n	225m	5	C	DC1	TO86
37	55208DM		2	MOS	10m	5.0	1	6.0	TTL	.40		5.0	5.0		35n	225m	5	C	DC1b	DL14ao
38	55208FM		2	MOS	10m	5.0	1	6.0	TTL	.40		5.0	5.0		35n	225m	5	C	DC1b	TO86
39	75207DC		2	MOS	10m	5.0	1	6.0	TTL	.40	2.4	5.0	5.0		35n	225m	0	7	DC1	DL14ao
40	75207PC		2	MOS	10m	5.0	1	6.0	TTL	.40	2.4	5.0	5.0		35n	225m	0	7	DC1	DL14bn
41	75208DC		2	MOS	10m	5.0	1	6.0	TTL	.40		5.0	5.0		35n	225m	0	7	DC1b	DL14ao
42	75208PC		2	MOS	10m	5.0	1	6.0	TTL	.40		5.0	5.0		35n	225m	0	7	DC1b	DL14bn
43	75S207A		2	MOS	2.0	.80	1		TTL	.50	2.7	5.0	5.0		17n	600m	0	7	DC1b	DL14b
44	75S208A		2	MOS	2.0	.80	1		TTL			5.0	5.0		17n	600m	0	7	DC1b	DL14b
45	DS3625N		2	MOS	2.0	.80	1		TTL	.40	2.8	0.0	5.0		25n	220m	0	7	DC24	DL8r
46	DS7802J		2	MOS	2.0	.80	1		TTL	.40	2.4	0.0	5.0		32n	220m	5	C	DC25	DL16g
47	DS7806J		2	MOS	2.0	.80	1		TTL	.40	2.4	0.0	5.0		32n	220m	5	C	DC25a	DL14an
48	DS7806W		2	MOS	2.0	.80	1		TTL	.40	2.4	0.0	5.0		32n	220m	5	C	DC25a	F14-5
49	DS8802J		2	MOS	2.0	.80	1		TTL	.40	2.4	0.0	5.0		32n	220m	0	7	DC25	DL16g
50	DS8802N		2	MOS	2.0	.80	1		TTL	.40	2.4	0.0	5.0		32n	220m	0	7	DC25	DL16bv
51	DS8806J		2	MOS	2.0	.80	1		TTL	.40	2.4	0.0	5.0		32n	220m	0	7	DC25a	DL14an
52	DS8806N		2	MOS	2.0	.80	1		TTL	.40	2.4	0.0	5.0		32n	220m	0	7	DC25a	DL14o
53	MC3461L		2	NMS	1.1	1.4	2		TTL	1.65	.96	5.2	7.5		10n	450m	0	7	DC20	DL16e
54	DS1605J		6	MOS	1.0m	1.5m	1		TTL	.40	2.4	0.0	5.0		22n	575m	5	C	DC23	DL16g
55	DS1606J		6	MOS	1.0m	1.5m	1		TTL	.40	2.4	0.0	5.0		39n	575m	5	C	DC23	DL16g
56	DS1607J		6	MOS	1.0m	1.5m	1		TTL	.40	2.4	0.0	5.0		35n	575m	5	C	DC23	DL16g
57	DS1608J		6	MOS	1.0m	1.5m	1		TTL	.40	2.4	0.0	5.0		30n	575m	5	C	DC23	DL16g
58	DS3605J		6	MOS	1.0m	1.5m	1		TTL	.40	2.4	0.0	5.0		22n	575m	0	7	DC23	DL16g
59	DS3605N		6	MOS	1.0m	1.5m	1		TTL	.40	2.4	0.0	5.0		22n	575m	0	7	DC23	DL16bv
60	DS3606J		6	MOS	1.0m	1.5m	1		TTL	.40	2.4	0.0	5.0		39n	650m	0	7	DC23	DL16g
61	DS3606N		6	MOS	1.0m	1.5m	1		TTL	.40	2.4	0.0	5.0		39n	650m	0	7	DC23	DL16bv
62	DS3607J		6	MOS	1.0m	1.5m	1		TTL	.40	2.4	0.0	5.0		35n	650m	0	7	DC23	DL16g
63	DS3607N		6	MOS	1.0m	1.5m	1		TTL	.40	2.4	0.0	5.0		35n	650m	0	7	DC23	DL16bv
64	DS3608J		6	MOS	1.0m	1.5m	1		TTL	.40	2.4	0.0	5.0		30n	575m	0	7	DC23	DL16g
65	DS3608N		6	MOS	1.0m	1.5m	1		TTL	.40	2.4	0.0	5.0		30n	650m	0	7	DC23	DL16bv

SYMBOLS AND CODES EXPLAINED IN INTERPRETER

18. SAMPLE/HOLD

IN ORDER OF: (1)MIN INP VOLT (2)MIN OUT VOLT (3)MAX ACQUISITION ON TIME & (4)TYPE NUMBER

LINE No.	4 TYPE NUMBER	DATA SHT.	INPUT 1 MIN VOLT P-P (V)	INPUT MIN CURR P-P (A)	OUTPUT 2 MIN VOLT P-P (V)	OUTPUT MIN CURR P-P (A)	SLEW RATE V/uS	SAMPLE 3 MAX ACQUIS TIME (S)	SAMPLE °OUT (%)	SAMPLE MAX APER TIME	SAMPLE SMALL SIG BW (HZ)	MODE CNTRL VOLTAGE MAX '0' (V)	MODE CNTRL VOLTAGE MIN '1' (V)	RATED PWR SUP SPAN NEG (V)	RATED PWR SUP SPAN POS (V)	MAX OPER POWER DISS (W)	OPER TEMP RANGE CODE -	OPER TEMP RANGE CODE +	DRAWINGS LOGIC OR BLOCK	DRAWINGS OUTLINE Δ=MO
1	MP200CD		10	100k	10	10	50	200n			3.0M	.80	2.0	0.0	15	155m	0	7		D14Ø
2	IH5110IDEØ		15	100M			.63	35u	100m	200n	10			0.0	15	500m	2	8	DD45	DL16eb
3	IH5110MDEØ		15	100M			.63	35u	100m	200n	10			0.0	15	500m	2	8	DD45	DL16eb
4	IH5111IDEØ		20	100M			.63	35u	100m	200n	10			0.0	15	500m	2	8	DD45	DL16eb
5	IH5111MDEØ		20	100M			.63	35u	100m	200n	10			0.0	15	500m	2	8	DD45	DL16eb
6	SHC23		20	100M	20	10m	1.0	60u	10m	50n	20k	.80	2.0	15	15	450m	0	7	DD3	CN1a
7	SHC23ET		20	100M	20	10m	1.0	60u	10m	50n	20k	.80	2.0	15	15	450m	5	C	DD3	CN1a
8	SMP10BQ		21	15G	21	8.0m	10	3.5u	100m	50n	200k	.80	2.0	15	15	210m	5	C	DD54	DL14n
9	SMP10FQ		21	15G	21	8.0m	10	3.5u	100m	50n	200k	.80	2.0	15	15	210m	0	7	DD54	DL14n
10	SMP10AQ		22	30G	22	9.0m	10	3.5u	100m	50n	200k	.80	2.0	15	15	180m	5	C	DD54	DL14n
11	SMP10EQ		22	30G	22	9.0m	10	3.5u	100m	50n	200k	.80	2.0	15	15	180m	0	7	DD54	DL14n
12	LF198		36	10G				20u	100m	125n	3.0M	.80	2.4	15	15	165m	5	C	DD33	TO99
13	LF298		36	10G				20u	100m	125n	3.0M	.80	2.4	15	15	165m	2	8	DD33	TO99
14	LF398		36	10G				20u	100m	125n	3.0M	.80	2.4	15	15	195m	0	7	DD33	TO99
15	SH702M/B		60	10M	20	10m	5.0	4.0u	100m	50n	2.0M	.80	2.0	15	15	150m	5	C	DD9a	DL14r
16	SH702M/C		60	10M	20	10m	5.0	4.0u	100m	50n	2.0M	.80	2.0	15	15	150m	5	C	DD9a	DL14r
17	SH703		60	10M	20	10m	5.0	4.0u	100m	50n	2.0M	.80	2.0	15	15	150m	0	7	DD9a	DL14r

SYMBOLS AND CODES EXPLAINED IN INTERPRETER

19. SCHMITT TRIGGERS

IN ORDER OF: (1)TECHN (2)HYSTERES VOLT (3)INP THRESH POS (4)DEV CKTS & (5)TYPE NO.

LINE No.	5 TYPE NUMBER	DATA SHT.	2 HYST ERES VOLT (V)	INPUT THRESHOLD VOLTAGE 3 POS GOING (V)	NEG GOING (V)	MAX CURR (A)	4 DC EK VT S	LOGIC CODE	NI OM IM SU EN	MAX PROP DELAY tpd (S)	1 TE CH N	OUTPUT LOGIC LEVELS MAX '0' (V)	MIN '1' (V)	RATED PWR SUPPLY SPAN NEG (V)	POS (V)	MAX OPER POWER DISS (W)	OPER TEMP RANGE CODE -	+	DRAWINGS LOGIC OR BLOCK	OUTLINE Δ=MO
1	S0258A		100m	2.0		60m	1							0.0	6.0		2	6		DL8m
2	HEF4093P		2.0	5.9	3.9		4	NAND	4.5	40n	CMS	.01	9.99	0.0	10	400m	4	8	DE14	DL14y
3	HEF4583BD		2.0	8.5	6.5	10m	2	NIIV		40n	CMS	.05	14.9	0.0	15	60u	4	8	45-83B	DL16aw
4	HEF4583BP		2.0	8.5	6.5	10m	2	NIIV		40n	CMS	.05	14.9	0.0	15	60u	4	8	45-83B	DL16ef
5	SCL4093BF		3.5	8.9	5.4		4	NAND	5.5	240n	CMS	0.0	14.9	0.0	15	300m	5	C	40-11B	F16-12
6	CD4093BK		3.5	9.4	7.3	100n	4	NAND		240n	CMS	.05	14.9	0.0	15	500m	5	C	DE14	Δ004AF
7	HD1-54C14		5.0	10	5.0		6	INV	700m	400n	CMS	1.0	9.0	0.0	15	225u	5	C	74-04N	DL14j
8	HD1-74C14		5.0	10	5.0		6	INV	700m	400n	CMS	1.0	9.0	0.0	15	225u	4	8	74-04N	DL14j
9	HD9-54C14		5.0	10	5.0		6	INV	700m	400n	CMS	1.0	9.0	0.0	15	225u	5	C	54S04W	TO86
10	HD9-74C14		5.0	10	5.0		6	INV	700m	400n	CMS	1.0	9.0	0.0	15	225u	4	8	54S04W	TO86
11	367BL		4.5	6.5	5.0	1.0m	4	NAND	5.5	360n	DTL	1.5	10	0.0	12	432m	5	C	DE3	DL16c
12	367ML		4.5	6.5	5.0	1.0m	4	NAND	5.5	360n	DTL	1.8	13	0.0	15	810m	5	C	DE3	DL16c
13	368BL		4.5	6.5	5.0	1.0m	4	NAND	5.5	600n	DTL	1.5	10	0.0	12	396m	5	C	DE3a	DL16c
14	368ML		4.5	6.5	5.0	1.0m	4	NAND	5.5	600n	DTL	1.8	13	0.0	15	750m	5	C	DE3a	DL16c
15	SCL4584BF		4.0	11	8.2		6	INV		150n	MOS			0.0	15	1.8m	5	C		
16	MCC9041		190m	1.6	1.4	50n	1	NIV		2.0u	TTL			0.0	2.7	27m	2	7	DE23	CH14
17	74S132FC		200m	1.6	1.4	1.1m	4	NAND	300m	13n	TTL	.50	2.7	0.0	5.0	340m	0	7	54S00W	TO86
18	SFC4132E		300m	1.4	1.1	1.0m	4	NAND	300m	35n	TTL	.40	2.4	0.0	5.0	360m	0	7	74-00N	TO116
19	SFC4132EM		300m	1.4	1.1	1.0m	4	NAND	300m	35n	TTL	.40	2.4	0.0	5.0	360m	5	C	74-00N	TO116
20	SFC4132ET		300m	1.4	1.1	1.0m	4	NAND	300m	35n	TTL	.40	2.4	0.0	5.0	360m	2	8	74-00N	TO116
21	SFC4132JM		300m	1.4	1.1	1.0m	4	NAND	300m	35n	TTL	.40	2.4	0.0	5.0	360m	5	C	74-00N	TO116
22	SFC4132KM		300m	1.4	1.1	1.0m	4	NAND	300m	35n	TTL	.40	2.4	0.0	5.0	360m	5	C	74-00N	TO116
23	SFC4132PM		300m	1.4	1.1	1.0m	4	NAND	300m	35n	TTL	.40	2.4	0.0	5.0	360m	5	C	54S00W	TO85
24	54LS132DM		400m	1.4	1.0	180u	4	NAND	300m	20n	TTL	.40	2.5	0.0	5.0	70m	5	C	74-00N	DL14ao
25	54LS132FM		400m	1.4	1.0	180u	4	NAND	300m	20n	TTL	.40	2.5	0.0	5.0	70m	5	C	54S00W	TO86
26	74LS132FC		400m	1.4	1.0	180u	4	NAND	300m	20n	TTL	.40	2.7	0.0	5.0	70m	0	7	54S00W	TO86
27	74LS13FC		400m	1.5	1.1	180u	2	NAND	300m	27n	TTL	.50	2.7	0.0	5.0	35m	0	7	54-13W	TO86
28	7413FC		400m	1.5	1.1	850u	2	NAND	400m	27n	TTL	.40	2.4	0.0	5.0	160m	0	7	54-13W	TO86
29	74132FC		400m	1.5	1.1	560u	4	NAND	400m	22n	TTL	.40	2.4	0.0	5.0	200m	0	7	54S00W	TO86
30	74LS14FC		400m	1.5	1.1	180u	6	INV	300m	22n	TTL	.40	2.7	0.0	5.0	105m	0	7	54S04W	TO86
31	7414FC		400m	1.5	1.1	560u	6	INV	400m	22n	TTL	.40	2.4	0.0	5.0	300m	0	7	54S04W	TO86
32	ULN3303M		420m	3.7	3.3	50n	1	NIIV		2.0u	TTL			0.0	5.0	80m	4	A	DE1	DL8n
33	SN74LS13W		800m	1.5	1.1	400u	2	NAND		27n	TTL	.50	2.7	0.0	5.0	35m	0	7	54-13W	F14-18
34	SN74LS132W		800m	1.5	1.1	400u	4	NAND		22n	TTL	.50	2.7	0.0	5.0	70m	0	7	54S00W	F14-18
35	SN74LS14W		800m	1.5	1.1	400u	6	INV		22n	TTL	.50	2.7	0.0	5.0	105m	0	7	54S04W	F14-18
36	54LS13J		800m	1.6	.80	400u	2	NAND	300m	20n	TTL	.40	2.5	0.0	5.0	35m	5	C	74-13N	DL14ak
37	54LS13W		800m	1.6	.80	400u	2	NAND	300m	20n	TTL	.40	2.5	0.0	5.0	35m	5	C	54-13W	F14-13
38	74LS13J		800m	1.6	.80	400u	2	NAND	300m	20n	TTL	.50	2.7	0.0	5.0	35m	0	7	74-13N	DL14ak
39	74LS13W		800m	1.6	.80	400u	2	NAND	300m	20n	TTL	.50	2.7	0.0	5.0	35m	0	7	54-13W	F14-13
40	ITT74LS13N		800m	1.6	.80	180n	2	NAND		27n	TTL	.50	2.7	0.0	5.0	35m	0	7	74-13N	DL14d
41	54LS132J		800m	1.6	.80	400u	4	NAND	300m	20n	TTL	.40	2.5	0.0	5.0	105m	5	C	74-00N	DL14ak
42	54LS132W		800m	1.6	.80	400u	4	NAND	300m	20n	TTL	.40	2.5	0.0	5.0	105m	5	C	54S00W	F14-13
43	74LS132J		800m	1.6	.80	400u	4	NAND	300m	20n	TTL	.50	2.7	0.0	5.0	105m	0	7	74-00N	DL14ak
44	74LS132W		800m	1.6	.80	400u	4	NAND	300m	20n	TTL	.50	2.7	0.0	5.0	105m	0	7	54S00W	F14-13
45	54LS14J		800m	1.6	.80	400u	6	INV	300m	20n	TTL	.40	2.5	0.0	5.0	105m	5	C	74-04N	DL14ak
46	54LS14W		800m	1.6	.80	400u	6	INV	300m	20n	TTL	.40	2.5	0.0	5.0	105m	5	C	54S04W	F14-13
47	74LS14J		800m	1.6	.80	400u	6	INV	300m	20n	TTL	.50	2.7	0.0	5.0	105m	0	7	74-04N	DL14ak
48	74LS14W		800m	1.6	.80	400u	6	INV	300m	20n	TTL	.50	2.7	0.0	5.0	105m	0	7	54S04W	F14-13
49	ITT74LS14N		800m	1.6	.80	180n	6	INV		22n	TTL	.50	2.7	0.0	5.0	105m	0	7	74-04N	DL14d
50	FLH351-7413		800m	1.7	.90	1.0m	2	NAND	1.1	27n	TTL	.40	2.4	0.0	5.0	160m	0	7	74-13N	DL14bd
51	FLH355-8413		800m	1.7	.90	1.0m	2	NAND	1.1	27n	TTL	.40	2.4	0.0	5.0	160m	2	8	74-13N	DL14bd
52	ITT5413J		800m	1.7	.90	850n	2	NAND		35n	TTL	.40	2.4	0.0	5.0	180m	5	C	74-13N	D14-1d
53	ITT7413J		800m	1.7	.90	850n	2	NAND		35n	TTL	.40	2.4	0.0	5.0	180m	0	7	74-13N	D14-1d
54	ITT7413N		800m	1.7	.90	850n	2	NAND		35n	TTL	.40	2.4	0.0	5.0	180m	0	7	74-13N	DL14d
55	MIC5413J		800m	1.7	.90	1.6m	2	NAND	400m	35n	TTL	.80	2.0	0.0	5.0	180m			74-13N	DL14bg
56	MIC7413J		800m	1.7	.90	1.6m	2	NAND	400m	35n	TTL	.80	2.0	0.0	5.0	180m	0	7	74-13N	DL14bg
57	MIC7413N		800m	1.7	.90	1.6m	2	NAND	400m	35n	TTL	.80	2.0	0.0	5.0	180m	0	7	74-13N	D14-8c
58	TL7413N		800m	1.7	.90	1.0m	2	NAND		27n	TTL	.40	2.4	0.0	5.0	160m	0	7	74-13N	DL☑
59	FLH601-74132		800m	1.7	.90	1.0m	4	NAND	1.1	27n	TTL	.40	2.4	0.0	5.0	200m	0	7	74-00N	DL14bd
60	FLH605-84132		800m	1.7	.90	1.0m	4	NAND	1.1	27n	TTL	.40	2.4	0.0	5.0	200m	2	8	74-00N	DL14bd
61	MIC54135J		800m	1.7	.90	97u	4	NAND	700m	37n	TTL	.40	2.4	0.0	5.0	90m	5	C	74S135N	TO116
62	MIC74135J		800m	1.7	.90	97u	4	NAND	700m	37n	TTL	.40	2.4	0.0	5.0	90m	0	7	74S135N	TO116
63	MIC74135N		800m	1.7	.90	97u	4	NAND	700m	37n	TTL	.40	2.4	0.0	5.0	90m	0	7	74S135N	TO116
64	N74232A		800m	1.7	.90	1.0m	4	NOR	400m	22n	TTL	.40	2.4	0.0	5.0	220m	0	7	DE6a	DL14b
65	S54232F		800m	1.7	.90	1.0m	4	NOR	400m	22n	TTL	.40	2.4	0.0	5.0	220m	5	C	DE6a	DL14ap
66	MIC54137J		800m	1.7	.90	97u	6	INV	700m	37n	TTL	.40	2.4	0.0	5.0	260m	5	C	74LS137N	TO116
67	MIC74137J		800m	1.7	.90	97u	6	INV	700m	37n	TTL	.40	2.4	0.0	5.0	260m	0	7	74LS137N	TO116
68	MIC74137N		800m	1.7	.90	97u	6	INV	700m	37n	TTL	.40	2.4	0.0	5.0	260m	0	7	74LS137N	TO116
69	57LS300N		800m	1.7	.90	200u	8	INV	400m	25n	TTL	.40	2.4	0.0	5.0	295m	5	C	DE33	DL20g
70	57LS301N		800m	1.7	.90	200u	8	NIV	400m	25n	TTL	.40	2.4	0.0	5.0	270m	5	C	DE35a	DL20g
71	57LS304N		800m	1.7	.90	200u	8	NIV	400m	25n	TTL	.40	2.4	0.0	5.0	270m	5	C	DE35	DL20g
72	57LS305J		800m	1.7	.90	200u	8	NIV	400m		TTL	.40	2.4	0.0	5.0	475m	5	C	74LS245	DL20f
73	57LS307N		800m	1.7	.90	200u	8	INV	400m	25n	TTL	.40	2.4	0.0	5.0	295m	5	C	DE33a	DL20g
74	57LS310J		800m	1.7	.90	200u	8	NIIV	400m		TTL	.40	2.4	0.0	5.0	475m	5	C	74LS642	DL20f
75	57S300N		800m	1.7	.90	1.0m	8	INV	400m		TTL	.55	2.4	0.0	5.0	725m	5	C	DE33	DL20g
76	57S301N		800m	1.7	.90	1.0m	8	NIV	400m		TTL	.55	2.4	0.0	5.0	850m	5	C	DE35a	DL20g
77	57S304N		800m	1.7	.90	1.0m	8	NIV	400m		TTL	.55	2.4	0.0	5.0	850m	5	C	DE35	DL20g
78	57S307N		800m	1.7	.90	1.0m	8	INV	400m		TTL	.55	2.4	0.0	5.0	725m	5	C	DE33a	DL20g
79	67LS300J		800m	1.7	.90	200u	8	INV	400m	25n	TTL	.50	2.4	0.0	5.0	250m	0	7	DE33	DL20f
80	67LS300N		800m	1.7	.90	200u	8	INV	400m	25n	TTL	.50	2.4	0.0	5.0	250m	0	7	DE33	DL20g
81	67LS301J		800m	1.7	.90	200u	8	NIV	400m	25n	TTL	.50	2.4	0.0	5.0	270m	0	7	DE35a	DL20f
82	67LS301N		800m	1.7	.90	200u	8	NIV	400m	25n	TTL	.50	2.4	0.0	5.0	270m	0	7	DE35a	DL20g
83	67LS304J		800m	1.7	.90	200u	8	NIV	400m	25n	TTL	.50	2.4	0.0	5.0	270m	0	7	DE35	DL20f
84	67LS304N		800m	1.7	.90	200u	8	NIV	400m	25n	TTL	.50	2.4	0.0	5.0	270m	0	7	DE35	DL20g
85	67LS305J		800m	1.7	.90	200u	8	NIV	400m		TTL	.50	2.4	0.0	5.0	475m	0	7	74LS245	DL20f
86	67LS305N		800m	1.7	.90	200u	8	NIV	400m		TTL	.50	2.4	0.0	5.0	475m	0	7	74LS245	DL20g
87	67LS307J		800m	1.7	.90	200u	8	INV	400m	25n	TTL	.50	2.4	0.0	5.0	250m	0	7	DE33a	DL20f
88	67LS307N		800m	1.7	.90	200u	8	INV	400m	25n	TTL	.50	2.4	0.0	5.0	250m	0	7	DE33a	DL20g
89	67LS310J		800m	1.7	.90	200u	8	NIIV	400m		TTL	.50	2.4	0.0	5.0	475m	0	7	74LS642	DL20f
90	67LS310N		800m	1.7	.90	200u	8	NIIV	400m		TTL	.50	2.4	0.0	5.0	475m	0	7	74LS642	DL20g
91	67S300J		800m	1.7	.90	1.0m	8	INV	400m		TTL	.55	2.4	0.0	5.0	750m	0	7	DE33	DL20f
92	67S300N		800m	1.7	.90	1.0m	8	INV	400m		TTL	.55	2.4	0.0	5.0	750m	0	7	DE33	DL20g
93	67S301J		800m	1.7	.90	1.0m	8	NIV	400m		TTL	.55	2.4	0.0	5.0	900m	0	7	DE35a	DL20f
94	67S301N		800m	1.7	.90	1.0m	8	NIV	400m		TTL	.55	2.4	0.0	5.0	900m	0	7	DE35a	DL20g
95	67S304J		800m	1.7	.90	1.0m	8	NIV	400m		TTL	.55	2.4	0.0	5.0	900m	0	7	DE35	DL20f
96	67S304N		800m	1.7	.90	1.0m	8	NIV	400m		TTL	.55	2.4	0.0	5.0	900m	0	7	DE35	DL20g
97	67S307J		800m	1.7	.90	1.0m	8	INV	400m		TTL	.55	2.4	0.0	5.0	750m	0	7	DE33a	DL20f
98	67S307N		800m	1.7	.90	1.0m	8	INV	400m		TTL	.55	2.4	0.0	5.0	750m	0	7	DE33a	DL20g
99	MCC9016		1.5	2.9	1.4		1	NIV			TTL			0.0	4.5	120m	0	6	DE22	CH13

SYMBOLS AND CODES EXPLAINED IN INTERPRETER

20. SPECIAL DEVICES

IN ORDER OF: (1)TECHN
(2)TYPE CODE & (3)TYPE NUMBER

LINE No.	3 TYPE NUMBER	DATA SHT.	2 TYPE CODE	1 TECHN	INPUT LOGIC LEVELS MAX '0' (V)	INPUT LOGIC LEVELS MIN '1' (V)	RATED PWR SUPPLY SPAN NEG (V)	RATED PWR SUPPLY SPAN POS (V)	MAX OPER POWER DISS (W)	OPER TEMP RANGE CODE -	OPER TEMP RANGE CODE +	GENERAL DESCRIPTION	DRAWINGS LOGIC OR BLOCK	DRAWINGS OUTLINE Δ=MO
1	AY8-1472B		2		.80	3.5	12	5.0	195m	0	7	Progm Sync/Async Receiver,640k Baud	E2-9	DL40d
2	AY8-1482B		2		.80	3.5	12	5.0	245m	0	7	Progm Sync/Async Transmitter	E2-10	DL40d
3	2637I		6		0.8	2.2	0.0	5.0		0	5	Universal Video IF;280nSec Resolution		
4	2678I		6		0.8	2.0	0.0	5.0	1.5	0	7	Programmable Keyboard/Display Interfa		
5	2678N		6		0.8	2.0	0.0	5.0	1.5	0	7	Programmable Keyboard/Display Interfa		
6	816-50-A1		7					20	200m	0	7	12 Bit Curr Sum Network:Max Error .00	E7-6	D24-17
7	816-50-A2		7					20	200m	0	7	12 Bit Curr Sum Network:Max Error .02	E7-6	D24-17
8	816-50-B1		7					20	200m	5	C	12 Bit Curr Sum Network:Max Error .00	E7-6	D24-17
9	816-50-B2		7					20	200m	5	C	12 Bit Curr Sum Network:Max Error .02	E7-6	D24-17
10	816-55-A1		7					20	100m	0	7	12 Bit Volt Sum Network:Max Error .01	E7-7	DL16df
11	816-55-A2		7					20	100m	0	7	12 Bit Volt Sum Network:Max Error .05	E7-7	DL16df
12	816-55-B1		7					20	100m	5	C	12 Bit Volt Sum Network:Max Error .01	E7-7	DL16df
13	816-55-B2		7					20	100m	5	C	12 Bit Volt Sum Network:Max Error .05	E7-7	DL16df
14	7460		7							5	A	4 Bit 1k/2k Ladder Network;TC 100ppm/	E7-28	D08-16
15	7461		7							5	A	6 Bit 1k/2k Ladder Network;TC 100ppm/	E7-29	D14-24
16	MC1407L		7		.50	4.0	15	15	1.0	0	7	A/D Control Ckt;Op-Amp,Comparator	E7-27	DL16at
17	MC1507L		7		.50	4.0	15	15	1.0	-	C	A/D Control Ckt;Op-Amp,Comparator	E7-27	DL16at
18	ULN2140H		7		.80	2.0	15	15	240m	0	7	Quad Curr Sw;Non-Linearity .50% max	E7-5	DL14ac
19	ULN2141A		7		.80	2.0	15	15	240m	0	7	Quad Curr Sw;Non-Linearity .05% max	E7-5	DL14bh
20	ULN2141H		7		.80	2.0	15	15	240m	0	7	Quad Curr Sw;Non-Linearity .05% max	E7-5	DL14ac
21	ULN2142A		7		.80	2.0	15	15	240m	0	7	Quad Curr Sw;Non-Linearity .01% max	E7-5	DL14bh
22	ULN2142H		7		.80	2.0	15	15	240m	0	7	Quad Curr Sw;Non-Linearity .01% max	E7-5	DL14ac
23	ULS2140A		7		.80	2.0	15	15	240m	5	C	Quad Curr Sw;Non-Linearity .50% max	E7-5	DL14bh
24	ULS2141A		7		.80	2.0	15	15	240m	5	C	Quad Curr Sw;Non-Linearity .05% max	E7-5	DL14bh
25	ULS2141H		7		.80	2.0	15	15	240m	5	C	Quad Curr Sw;Non-Linearity .05% max	E7-5	DL14ac
26	ULS2142A		7		.80	2.0	15	15	240m	5	C	Quad Curr Sw;Non-Linearity .01% max	E7-5	DL14bh
27	ULS2142H		7		.80	2.0	15	15	240m	5	C	Quad Curr Sw;Non-Linearity .01% max	E7-5	DL14ac
28	AY5-9200		11		-1.0	-5.0	15	0.0	2.3m	5	8	Repertory Dialler,Stores 10 x 22 Dig	E11-26	DL16eg
29	MK5912-3P		11				5.0	5.0				PCM Transmit/Receive Filter	E11-71	DLØ
30	ML8204		11		19	0.0	0.0	19	88m	4	6	Tone Ringer For Telephone Set	E11-5	DL8r
31	ML8205		11				0.0	21	35m	4	6	Tone Ringer for Telephone Set	E11-5	DL8r
32	ADC1210-10-1		13				15	15	18	5	8	12 Bit Card Mount A/D Conv;Lin ±0.05%		
33	ADC1210-10-3		13				15	15	18	0	7	12 Bit Card Mount A/D Conv;Lin ±0.05%		
34	ADC1210-12-1		13				15	15	18	5	8	12 Bit Card Mount A/D Conv;Lin ±0.125		
35	ADC1210-12-3		13				15	15	18	0	7	12 Bit Card Mount A/D Conv;Lin ±0.125		
36	DRC644H3		13			90	15	15		0	7	14 Bit D/S,D/R Conv;Out Freq 360-440H		
37	SBA26154		13			90	0.0	5.0	37	2	7	Hi-Pwr Synchro Boost;Sync Inp;25VA	E13-36	
38	SBA26155		13			6.8	0.0	5.0	37	2	7	Hi-Pwr Synchro Boost;Resol Inp;25VA	E13-36	
39	AY5-3600PRO		14		0.75	3.9	12	5.0		0	7	Keyboard Encoder;PROM/EPROM Applicato		
40	S2811		15		.80	2.0	0.0	7.0	1.0	0	7	Sig Process Peril;On-Chip ROM,RAM		
41	S2814AC		15		0.8	2.0	0.0	5.0		0	7	Fast Fourier Transformer;SPP	E25-5	DL28be
42	S2814AD		15		0.8	2.0	0.0	5.0		0	7	Fast Fourier Transformer;SPP	E25-5	DL28bg
43	S2814AP		15		0.8	2.0	0.0	5.0		0	7	Fast Fourier Transformer;SPP	E25-5	DL28bf
44	S2815C		15		0.8	2.0	0.0	5.0		0	7	Digital Filter/Utility Peripheral	E25-6	DL28be
45	S2815D		15		0.8	2.0	0.0	5.0		0	7	Digital Filter/Utility Peripheral	E25-6	DL28bg
46	S2815P		15		0.8	2.0	0.0	5.0		0	7	Digital Filter/Utility Peripheral	E25-6	DL28bf
47	S2811C		25		0.8	2.0	0.0	5.0		0	7	Signal Processing Peripheral	E25-6	DL28be
48	S2811D		25		0.8	2.0	0.0	5.0		0	7	Signal Processing Peripheral	E25-6	DL28bg
49	S2811P		25		0.8	2.0	0.0	5.0		0	7	Signal Processing Peripheral	E25-6	DL28bf
50	8T32NA		31		.80	2.0	0.0	5.0		0	7	8-Bit Latch Address Bidir I/O Portt	E31-3	DL24aa
51	8T33NA		31		.80	2.0	0.0	5.0		0	7	8-Bit Latch Address Bidir I/O Port	E31-3	DL24aa
52	8T35NA		31		.80	2.0	0.0	5.0		0	7	8-Bit Latch Address Bidir I/O Port	E31-3	DL24aa
53	8T36NA		31		.80	2.0	0.0	5.0		0	7	8-Bit Latch Address Bidir I/O Port	E31-3	DL24aa
54	2672I		45		.80	2.0	0.0	5.0		0	7	Video Timing Control;4.0MHz Char Rate	E45-4	
55	2672N		45		.80	2.0	0.0	5.0		0	7	Video Timing Control;4.0MHz Char Rate	E45-4	
56	2673I		45		.80	2.0	0.0	5.0		0	7	Video Graphics Atribute Control	E45-5	
57	2673N		45		.80	2.0	0.0	5.0		0	7	Video Graphics Atribute Control	E45-5	
58	R6545AC		45		.80	2.0	0.0	5.0	700m	0	7	CRT Controller for R6500 MC Sys	E45-1	
59	R6545AP		45		.80	2.0	0.0	5.0	700m	0	7	CRT Controller for R6500 MC Sys	E45-1	
60	R6545C		45		.80	2.0	0.0	5.0	700m	0	7	CRT Controller for R6500 MC Sys	E45-1	
61	R6545P		45		.80	2.0	0.0	5.0	700m	0	7	CRT Controller for R6500 MC Sys	E45-1	
62	2671I		46		.80	2.0	0.0	5.0		0	7	KeyBd/Commun. Control 8x16 Matrix	E45-3	
63	2671N		46		.80	2.0	0.0	5.0		0	7	KeyBd/Commun. Control 8x16 Matrix	E45-3	
64	ICL7103BCDI		7	BFT	.40	2.4	15	15	500m	0	7	Precision A/D Converter	BA163	DL28j
65	ICL7103BCPI		7	BFT	.40	2.4	15	15	500m	0	7	Precision A/D Converter	BA163	DL28ae
66	S291		17	BMS			5.0	5.0	600m	2	7	PCM 2-Chan Codec;Out Load ITTL		DL24ao
67	S291A		17	BMS			5.0	5.0	75m	2	7	PCM 2-Chan Codec;Pwr Down Mode		
68	MC3419P		11	BPR	4.0	1.2	56	0	1.0	0	7	Subscriber Loop Interface Circuit	E11-77	DL18t
69	MC3519L		11	BPR	-2.0	-1.0	48	0.0	1.5	4	8	Subscriber Loop Interface Circuit	E11-30	DL18u
70	MC3519P		11	BPR	-2.0	-1.0	48	0.0	1.5	4	8	Subscriber Loop Interface Circuit	E11-30	DL18t
71	MU105CP		11	BPR	.80	4.0	0.0	18	1.3	0	7	Electro-Optical Communication Sys	E11-76	DL16Ø
72	TDD0246		11	BPR			0.0	66	2.3	2	6	Amp for Dynamic Telephone/Microphone	E11-102	DL8z
73	U175M		11	BPR			0.0	15	150m			Blink IC;Freq 1.3 to 5.2Hz	E11-103	TO92
74	CD4532BK		1	CMS	4.0	11	0.0	15	500m	5	C	8 Input,3 Output;tpd45ns Typ	45-32B	Δ004AG
75	SCL5284		1	CMS					300m	0	5	Adress Encoder/TX;Po(Zener)100mW		
76	ED-5		6	CMS	2.5	2.7	0.0	5.0		0	7	Programmable Encoder/Decoder	E6-37	DL18q
77	ED-9		6	CMS	2.5	2.7	0.0	5.0		0	7	Programmable Encoder/Decoder	E6-37	DL18q
78	ED-11		6	CMS	2.5	2.7	0.0	5.0		0	7	Programmable Encoder/Decoder	E6-36	DL28r
79	ED-15		6	CMS	2.5	2.7	0.0	5.0		0	7	Programmable Encoder/Decoder	E6-36	DL28r
80	MD54C245AD		6	CMS	.80	2.0	0.0	5.0	500n	5	C	Allows Hi-speed Asyn 2-way Comm bet B	E6-20	D20Ø
81	MD74C245AC		6	CMS	.80	2.0	0.0	5.0	500n	4	8	Hi-speed Asyn 2-way Comm bet Buses	E6-20	D20Ø
82	MD74C245AE		6	CMS	.80	2.0	0.0	5.0	50u	4	8	OCTAL Bus Transceiver	74LS245	D20Ø
83	MD4104BC		6	CMS	4.5	10.5	0.0	15	4.2u	4	8	Quad Low E to Hi-E Transl W/3-State O	BC59	DL16Ø
84	MD4104BD		6	CMS	4.5	10.5	0.0	15	1.8u	5	C	Quad Low E to Hi-E Transl W/3-state O	BC59	DL16Ø
85	LD130BP		7	CMS	.40	2.4	5.0	5.0	50m	2	8	A/D ±3 Digit;60 Samples/Sec max	E7-11	DL18ae
86	LD130CJ		7	CMS	.40	2.4	5.0	5.0	450m	0	7	A/D ±3 Digit;60 Samples/Sec max	E7-11	DL18e
87	LD131CJ		7	CMS	.40	2.4	5.0	5.0	450m	0	7	A/D ±3-1/3 Digit;60 Samples/Sec max	E7-11	DL18e
88	TC5055P		7	CMS	4.0	11	0.0	15	300m	4	8	3 1/2 Digit DVM Circuit	E7-41	DL42b
89	AY5-9100		11	CMS	-1.0	-4.0			2.0m	2	7	Push Button Phone Dialler;Clock 30kHz	E11-24	DL18ah
90	AY5-9106		11	CMS	-.20	-2.0			240u	2	7	Push Button Phone Dialler;Clock 20kHz	E11-24	DL18ah
91	AY5-9110		11	CMS	-1.0	-4.0			2.0m	2	7	Push Button Phone Dialler;Clock 30kHz	E11-24	DL18ah
92	AY5-9118		11	CMS	-.20	-2.0			240u	2	7	Push Button Phone Dialler;Clock 21kHz	E11-24a	DL14bb
93	AY5-9120		11	CMS	-1.0	-4.0			2.0m	2	7	Push Button Phone Dialler;Clock 30kHz	E11-24	DL18ah
94	AY5-9151		11	CMS	.50	4.5	0.0	5.0	1.0m	2	8	Push Button Phone Dialler;Cl 18.7kHz	E11-25	DL18ah
95	AY5-9153		11	CMS	.50	4.5	0.0	5.0	1.0m	2	8	Push Button Phone Dialler;Cl 18.7kHz	E11-25b	DL28b
96	AY5-9500		11	CMS			15	0.0		2	7	Clk Gen for Push Button/Repertory Dia		D14-8a
97	DF321DJ		11	CMS	.01	2.99	0.0	3.0	450m	4	8	Telephone Sys Loop Disconnect Dialer	E11-1a	DL28f
98	DF321DR		11	CMS	.01	2.99	0.0	3.0	1.0	4	8	Telephone Sys Loop Disconnect Dialer	E11-1a	DL28x
99	DF325DJ		11	CMS			0.0	5.5				Telephone Sys Loop Disconnect Dialer	E11-1	DL18i
100	DF331/332		11	CMS	.50	12	7.5	7.5	90m	0	7	CODEC Pair Conforming to u-255 Law	E11-19	DL14p
101	DF334CJ		11	CMS	.50	12	7.5	7.5	450m	0	7	CODEC Pair Conforming to u-255Law	E11-19	DL14p
102	DF341/342		11	CMS			7.5	7.5		2	8	CODEC Pair Conforming to A-Law	E11-20	DL14p
103	G4320DI#ai		11	CMS	0.9	2.1	0.3	10.0	1.0	4	8	ISO Keypad Pulse Dialer	E11-1	DL18be
104	G4320DM#ai		11	CMS	0.9	2.1	0.3	10.0	1.0	5	C	ISO Keypad Pulse Dialer	E11-1	DL18be
105	G4320P#ai		11	CMS	0.9	2.1	0.3	10.0	450m	0	7	ISO Keypad Pulse Dialer E11-1	E11-1	DL18bc
106	G4320PI#ai		11	CMS	0.9	2.1	0.3	10.0	450m	4	8	ISO Keypad Pulse Dialer	E11-1	DL18bc
107	G4325CM#ai		11	CMS	0.9	2.1	0.3	10.0	1.0	5	C	ISO Programmable Keypad Pulse Dialer	E11-1e	DL18bd
108	G4325DI#ai		11	CMS	0.9	2.1	0.3	10.0	1.0	4	8	ISO Programmable Keypad Pulse Dialer	E11-1e	DL18be
109	G4325P#ai		11	CMS	0.9	2.1	0.3	10.0	450m	0	7	ISO Programmable Keypad Pulse Dialera	E11-1e	DL18bc
110	G4325PI#ai		11	CMS	0.9	2.1	0.3	10.0	450m	4	8	ISO Programmable Keypad Pulse Dialer	E11-1e	DL18bc

SYMBOLS AND CODES
EXPLAINED IN INTERPRETER

20. SPECIAL DEVICES

IN ORDER OF: (1)TECHN (2)TYPE CODE & (3)TYPE NUMBER

LINE No.	3 TYPE NUMBER	DATA SHT.	2 TYPE CODE	1 TECHN	INPUT LOGIC LEVELS MAX '0' (V)	INPUT LOGIC LEVELS MIN '1' (V)	RATED PWR SUPPLY SPAN NEG (V)	RATED PWR SUPPLY SPAN POS (V)	MAX OPER POWER DISS (W)	OPER TEMP RANGE CODE -	OPER TEMP RANGE CODE +	GENERAL DESCRIPTION	DRAWINGS LOGIC OR BLOCK	DRAWINGS OUTLINE Δ=MO
1	G4326DI#ai		11	CMS	0.9	2.1	0.3	10.0	1.0	4	8	ISO Programmable Keypad Pulse Dialer	E11-1f	DL18be
2	G4326P#ai		11	CMS	0.9	2.1	0.3	10.0	450m	0	7	ISO Programmable Keypad Pulse Dialer	E11-1f	DL18bc
3	G4326PI#ai		11	CMS	0.9	2.1	0.3	10.0	450m	4	8	ISO Programmable Keypad Pulse Dialer	E11-1f	DL18bc
4	G5087DI		11	CMS	1.5	3.5	0.0	10	850m	4	8	DTMF Generator;3.58MHz crystal	E11-110	DL16fe
5	G5087P		11	CMS	1.5	3.5	0.0	10	850m	0	7	DTMF Generator;3.58MHz crystal	E11-110	DL16fd
6	G5087PI		11	CMS	1.5	3.5	0.0	10	850m	4	8	DTMF Generator;3.58MHz crystal	E11-110	DL16fd
7	G5089DI		11	CMS	1.5	3.5	0.0	10	850m	4	8	DTMF Generator;3.58MHz crystal	E11-111	DL16fe
8	G5089P		11	CMS	1.5	3.5	0.0	10	850m	0	7	DTMF Generator;3.58MHz crystal	E11-111	DL16fd
9	G5089PI		11	CMS	1.5	3.5	0.0	10	850m	4	8	DTMF Generator;3.58MHz crystal	E11-111	DL16fd
10	G8862P#ai		11	CMS	3.5	8.5	15.0	15.0	600m	0	7	DTMF Decoder;	E11-69	DL24cb
11	G8862PI#ai		11	CMS	3.5	8.5	15.0	15.0	600m	4	8	DTMF Decoder	E11-69	DL24cb
12	G8863DI#ai		11	CMS	3.5	8.5	15.0	15.0	1.2	4	8	DTMF Decoder	E11-69	DL24cb
13	M956		11	CMS	1.5	3.5			1.0	0	7	DTMF Rcvr; Decodes all 16 DTMF Digits	E11-196	DL22w
14	MC14403L		11	CMS	1.5	3.5	0.0	12	500m	3	6	Dual Tone Multi-freq Dialer	E11-13a	DL16ab
15	MC14403P		11	CMS	1.5	3.5	0.0	12	500m	3	6	Dual Tone Multi-freq Dialer	E11-13a	DL16ai
16	MC14405L		11	CMS	1.5	3.5	0.0	12	500m	3	6	Dual Tone Multi-freq Dialer	E11-13b	DL18ac
17	MC14405P		11	CMS	1.5	3.5	0.0	12	500m	3	6	Dual Tone Multi-freq Dialer	E11-13b	DL18v
18	MC14413L		11	CMS	.80	2.0	0.0	18	30m	4	8	Pulse Modulation; Data Filter	E11-66	DL16e
19	MC14413P		11	CMS	.80	2.0	0.0	18	30m	4	8	Pulse Modulation; Data Filter	E11-66	DL16aj
20	MC14414L		11	CMS	.80	2.0	0.0	18	30m	4	8	Pulse Modulation; Data Filter	E11-66	DL16e
21	MC14414P		11	CMS	.80	2.0	0.0	18	30m	4	8	Pulse Modulation; Data Filter	E11-66	DL16aj
22	MK5087J		11	CMS	.30	7.0	0.0	10.5	500m	3	6	Integrated Tone Dialer	E11-45	DL16bc
23	MK5087P		11	CMS	1.0	2.4	0.0	10	500m	3	6	Integrated Tone Dialer	E11-117	DL16dc
24	MK5089J		11	CMS	3.0	7.0	0.0	10	500m	3	6	Integrated Tone Dialer	E11-72a	DL16bc
25	MK5089N-1		11	CMS	3.5	7.35	0.0	10.5	500m	3	6	Integrated Tone Dialer	E11-46	DL16an
26	MK5089P		11	CMS	3.0	7.0	0.0	10	500m	3	6	Integrated Tone Dialer	E11-72a	DL16dc
27	MK5091N		11	CMS	.30	7.0	0.0	10	500m	3	6	Integrated Tone Dialer;CEPT Compatibl	E11-64	DL16ax
28	MK5092N		11	CMS	3.0	7.0	0.0	10	500m	0	6	Integrated Tone Dialer	E11-72	DL16ax
29	MK5094N		11	CMS	3.0	7.0	0.0	10	500m	0	6	Integrated Tone Dialer E	E11-72	DL16ax
30	MK5098N		11	CMS	0.8	2.0	0.0	6.0	500m	3	6	Integrated Pulse Dialer;Min Ios 1.0mA	E11-40a	
31	MK5099N		11	CMS	1.2	4.8	0.0	6.0	500m	3	6	Integrated Pulse Dialer with Redial	E11-42	DL16ax
32	MK5151N		11	CMS	.40	4.0	0.0	5.0	500m	5	C	u255-Law Companding CODEC	E11-53	D24-45
33	MK5156N		11	CMS	.40	4.0	0.0	5.0	500m	5	C	A-Law Companding CODEC	E11-51	DL16Ø
34	MK5156P		11	CMS	.40	3.9	5.0	5.0	500m	0	7	E11-51	E11-51	DL16dc
35	MK5380J		11	CMS	0.8	1.4	0.0	10	500m	3	6	DTMF Tone Dialer IC;3.58MHz Xtal Osc	E11-118	DL16fq
36	MK5380P		11	CMS	0.8	1.4	0.0	10	500m	3	6	DTMF Tone Dialer IC;3.58MHz Xtal Osc	E11-118	DL16fp
37	MK5389J		11	CMS	0.8	1.8	0.0	10	500m	3	6	DTMF Dialer IC;3.58MHZ X-tal Osc	E11-119	DL16fq
38	MK5389P		11	CMS	0.8	1.8	0.0	10	500m	3	6	DTMF Dialer IC;3.58MHz X-tal Osc	E11-119	DL16fp
39	MT4320AD		11	CMS	.90	2.1	0.0	3.0	1.0	5	C	Keypad Pulse Dialer	E11-1,b	DL18e
40	MT4320AE		11	CMS	.90	2.1	0.0	3.0	450m	4	8	Keypad Pulse Dialer	E11-1	DL18e
41	MT4322AE		11	CMS	.90	2.1	0.0	3.0	450m	6	C	Keypad Pulse Dialer	E11-1b	DL18e
42	MT4323AE		11	CMS	.90	2.1	0.0	3.0	450m	6	C	Keypad Pulse Dialer	E11-1d	DL18e
43	MT4325AD		11	CMS	0.9	2.1	0.0	7.0	1.0	4	8	Programmable Keypad Pulse Dialer	E11-1e	DL18ae
44	MT4325AE		11	CMS	0.9	2.1	0.0	7.0	450m	4	8	Programmable Keypad Pulse Dialer	E11-1e	D18-25
45	MT4326AD		11	CMS	0.9	2.1	0.0	7.0	1.0	4	8	Same as MT4325 with M2 Muting	E11-1f	DL18ae
46	MT4326AE		11	CMS	0.9	2.1	0.0	7.0	450m	4	8	Same as MT4325 with M2 Muting	E11-1f	D18-25
47	MT8820AC		11	CMS	6.0	9.0	0.0	15		4	8	DTMF;Receiver/Decoder	E11-6	D2yØ
48	MT8820AD		11	CMS	6.0	9.0	0.0	15	37m	5	C	LSI Dual Tone Multi Freq Recvr/Decode	E11-6	DLØ
49	MT8820AE		11	CMS	6.0	9.0	0.0	15	37m	4	8	LSI Dual-Tone Multi-Freq Rcvr/Decoder	E11-6	D24Ø
50	MT8820AJ		11	CMS	6.0	9.0	0.0	15	37m	4	8	LSI Dual Tone Multi Freq Recvr/Decode	E11-6	DLØ
51	MT8820AN		11	CMS	6.0	9.0	0.0	15	37m	4	8	LSI Dual Tone Multi Freq Recvr/Decode	E11-6	DLØ
52	MT8865AC		11	CMS	3.5	8.5	0.0	12	850m	4	8	DTMF Filter;Has Hi,Low Group Filterin	E11-73	DL16cp
53	MT8865AE		11	CMS	3.5	8.5	0.0	12	400m	4	8	DTMF Filter;Has Hi,Low Group Filterin	E11-73	DL16co
54	NC320		11	CMS	.90	2.1	0.0	5.0	450m	4	8	Keybd to Phone Sys Loop Discon Dial	E11-8	DLØ
55	NC321		11	CMS	.90	2.1	0.0	5.0	1.0	4	8	Keybd to Phone Sys Loop Discon Dial	E11-1a	DLØ
56	NC322		11	CMS	.90	2.1	0.0	5.0	450m	4	8	Keybd to Phone Sys Loop Discon Dial	E11-1	DLØ
57	NC2320R		11	CMS	.90	2.1	0.0	3.0	1.0	4	8	Keybd to Phone Sys Loop Discon Dial	E11-1	DLØ
58	NC2320V		11	CMS	.90	2.1	0.0	3.0	450m	4	8	Keybd to Phone Sys Loop Discon Dial	E11-1	DLØ
59	NC2321R		11	CMS	.90	2.1	0.0	3.0	1.0	4	8	Keybd to Phone Sys Loop Discon Dial	E11-15	DLØ
60	NC2321V		11	CMS	.90	2.1	0.0	3.0	450m	4	8	Keybd to Phone Sys Loop Discon Dial	E11-1a	DLØ
61	NC2322R		11	CMS	.90	2.1	0.0	3.0	1.0	4	8	Keybd to Phone Sys Loop Discon Dial	E11-1b	DLØ
62	NC2322V		11	CMS	.90	2.1	0.0	3.0	450m	4	8	Keybd to Phone Sys Loop Discon Dial	E11-1b	DLØ
63	S120A3		11	CMS	10	-2.0	30	0.0	400m	2	8	Dialer;Push Button;In BCD Code		
64	S121B		11	CMS	-9.0	-2.0	30	0.0	400m	2	8	Dialer;Push Button;16x4-Bit Memory		
65	S359		11	CMS			0.3	14		2	7	Dialer;Push Button;Osc;BCD/MFV Code		DL16ak
66	S2560B		11	CMS	.20	.80	0.0	5.5	2.7m	4	8	Keypad Pulse Dialer;20 Digit Stg.	E11-33b	DL24as
67	S2561CE		11	CMS	3.6	8.4	0.0	12	50m	2	7	Tone Ringer;Rate Output Option	E11-34	DL18ak
68	S2561E		11	CMS	3.6	8.4	0.0	12	50m	2	7	Tone Ringer;Ring Enable	E11-34	DL18ak
69	S2562C		11	CMS	3.5	1.5	0.0	5.0		2	7	Repertory Dialer;BCD Output	E11-35	DL40ar
70	S2562D		11	CMS	3.5	1.5	0.0	5.0		2	7	Repertory Dialer;BCD Output	E11-35	DL40as
71	S2562P		11	CMS	.50	4.5	0.0	13.5	6.7m	4	8	Repertory Dialer;Dial Pulse,Mute Outp	E11-35	DL40j
72	S2816		11	CMS								Echo canceller processor;76db ERL	E11-145	DL28Ø
73	S2859E		11	CMS	3.0	7.0	0.0	10	500m	2	7	Dual Tone Digital Gen;Mute Drivers	E11-36	DL16bu
74	S3501E		11	CMS			7.5	7.5	500m	0	7	u-Law PCM Codec/Filter	E11-37	DL16bu
75	S3502E		11	CMS	.80	2.0	7.5	7.5	500m	0	7	u-Law PCM Codec/Filter	E11-38	DL16bu
76	S25089		11	CMS	2.1	8.4	0.0	10	500m	2	7	DTMF Generator; use TV xtal std.	E11-32a	
77	SBA5091		11	CMS	3.0	7.0	0.0	10	500m	3	6	DIALER;DTMF Telephones		DL18f
78	TT590I		12	CMS			0.0	30		5	1	Lin Iout 1.0uA/°k;Non Lin ±3.0°C Max	E12-7	TO52
79	TT590J		12	CMS			0.0	30		5	1	Lin Iout 1.0uA/°k;Non Lin ±1.5°C Max	E12-7	TO52
80	TT590K		12	CMS			0.0	30		5	1	Lin Iout 1.0uA/°k;Non Lin ±.80°C Max	E12-7	TO52
81	TT590L		12	CMS			0.0	30		5	1	Lin Iout 1.0uA/°k;Non Lin ±.40°C Max	E12-7	TO52
82	TT590M		12	CMS			0.0	30		5	1	Lin Iout 1.0uA/°k;Non Lin ±.30°C Max	E12-7	TO52
83	CDP1871CD		14	CMS	1.5	3.5	-0.5	7.0	500m	5	C	Keyboard Encoder;RC Cont Debounce		
84	CDP1871CE		14	CMS	1.5	3.5	-0.5	7.0	500m	4	8	Kyeboard Encoder;RC Cont Debounce		DL40o
85	CDP1871D		14	CMS	3.0	7.0	-0.5	11	500m	5	C	Kyeboard Encoder;RC Cont Debounce		
86	CDP1871E		14	CMS	3.0	7.0	-0.5	11	500m	4	8	Keyboard Encoder;RC Cont Debounce		DL40o
87	S3526BC		15	CMS			0.0	10	100m	0	7	Bandpass/Notch Filter,2600 Hz	E15-9	DL14v
88	S3526BP		15	CMS			0.0	10	100m	0	7	Bandpass/Notch Filter,2600 Hz	E15-9	DL14ac
89	MC14402Z		17	CMS			0.0	13	105m	4	8	Codec and Filter PCM Monochips	E17-15	CH24Ø
90	MC14406Z		17	CMS	4.0	11	0.0	16	80m	4	8	Codec Mu-Law PCM 8-Bit Companding A/D	E17-5	LL24Ø
91	MK5116P		17	CMS	0.4	3.9	5.0	5.0	30m	0	7	a-255 Law Companding CODEC	E17-3	DL16dc
92	MK5150N		17	CMS	0.4	4.0	5.0	5.0	200m	0	7	CODEC;u255 Companding Law		D24-45
93	MK5150P		17	CMS	0.4	4.0	5.0	5.0	200m	0	7	CODEC;u255 Companding Law		DL24bc
94	MK5151P		17	CMS	.40	4.0	0.0	5.0	30m	5	C	a-255 Law Companding CODEC	E17-3	DL24bc
95	MK5155J		17	CMS	0.4	4.0	5.0	5.0	200m	0	7	CODEC;A-Law Companding Code E11	E11-51	DL16ay
96	MK5155N		17	CMS	0.4	4.0	5.0	5.0	200m	0	7	CODEC;A-Low Compounding Code	E11-51	DL16ay
97	MK5155P		17	CMS	0.4	4.0	5.0	5.0	200m	0	7	CODEC;A-Law Companding Code	E11-51	DL16cs
98	NC2331		17	CMS			7.5	7.5	450m	0	7	uLaw CODEC Set:Coder (See NC2332)	E11-19	DLØ
99	NC2332		17	CMS			7.5	7.5	450m	0	7	uLaw CODEC Set:Decoder(See NC2331)	E11-19	DLØ
100	S3505		17	CMS	.80	2.0	5.0	5.0	1.0	2	7	Single Ch u-Law PCM CODEC/Filter Set	E17-9	DLØ
101	S3505A		17	CMS	.80	2.0	5.0	5.0	1.0	2	7	Single Ch u-Law PCM CODEC/Filter Set	E17-10	DLØ
102	S3505AC		17	CMS			5.0	5.0				PCM CODEC w/Filter	E17-10	DL24ch
103	S3505AD		17	CMS			5.0	5.0				PCM CODEC w/Filter	E17-10	DL24ci
104	S3505AP		17	CMS			5.0	5.0				PCM CODEC w/Filter	E17-10	DL24as
105	S3505C		17	CMS			5.0	5.0				PCM CODEC w/Filter	E17-16	DL24ch
106	S3505D		17	CMS			5.0	5.0				PCM CODEC w/Filter	E17-16	DL24ci
107	S3505P		17	CMS			5.0	5.0				PCM CODEC W/Filter	E17-16	DL24as
108	uA5116JC		17	CMS	0.40	3.9	5.0	5.0	30m	0	6	u255-law Companding CODEC	E11-53	DL16ec
109	uA5151JC		17	CMS	0.40	3.9	5.0	5.0	30m	0	6	u255-law Companding CODEC	E11-53	DL24be
110	uA5156JC		17	CMS	0.40	3.9	5.0	5.0	30m	0	6	A-Law Company CODEC	E11-51	DL16ec

SYMBOLS AND CODES EXPLAINED IN INTERPRETER

20. SPECIAL DEVICES

IN ORDER OF: (1)TECHN (2)TYPE CODE & (3)TYPE NUMBER

LINE No.	3 TYPE NUMBER	DATA SHT.	2 TYPE CODE	1 TECHN	INPUT LOGIC LEVELS MAX '0' (V)	INPUT LOGIC LEVELS MIN '1' (V)	RATED PWR SUPPLY SPAN NEG (V)	RATED PWR SUPPLY SPAN POS (V)	MAX OPER POWER DISS (W)	OPER TEMP RANGE CODE -	OPER TEMP RANGE CODE +	GENERAL DESCRIPTION	DRAWINGS LOGIC OR BLOCK	DRAWINGS OUTLINE Δ=MO
1	HI5900-2		25	CMS	.80	4.0	15	15	650m	5	C	Analog Sig Proc;/MIL Spec;12 Bit Acc		
2	HI5900-5		25	CMS	.80	4.0	15	15	650m	0	7	Analog Sig Proc;/Comm Spec;12Bit Acc		
3	HD1-6402-2		30	CMS	1.0	3.5	0.0	5.0	500u	5	C	Clock Freq 2.0MHz max;tpd 160ns max	E2-15	DL40Ø
4	HD1-6402-9		30	CMS	1.0	3.5	0.0	5.0	500u	4	8	Clock Freq 2.0MHz max;tpd 160ns max	E2-15	DL40Ø
5	HD1-6402A-2		30	CMS	2.0	7.0	0.0	10	5.0m	5	C	Clock Freq 4.0MHz max;tpd 70ns max	E2-15	DL40Ø
6	HD1-6402A-9		30	CMS	2.0	7.0	0.0	10	5.0m	4	8	Clock Freq 4.0MHz max;tpd 70ns max	E2-15	DL40Ø
7	HD1-6402C-9		30	CMS	1.0	3.5	0.0	5.0	4.0m	4	8	Clock Freq 1.0MHz max;tpd 190ns max	E2-15	DL40Ø
8	HD3-6402-2		30	CMS	1.0	3.5	0.0	5.0	500u	5	C	Clock Freq 2.0MHz max;tpd 160ns max	E2-15	DL40Ø
9	HD3-6402-9		30	CMS	1.0	3.5	0.0	5.0	500u	4	8	Clock Freq 2.0MHz max;tpd 160ns max	E2-15	DL40Ø
10	HD3-6402A-2		30	CMS	2.0	7.0	0.0	10	5.0m	5	C	Clock Freq 4.0MHz max;tpd 70ns max	E2-15	DL40Ø
11	HD3-6402A-9		30	CMS	2.0	7.0	0.0	10	5.0m	4	8	Clock Freq 4.0MHz max;tpd 70ns max	E2-15	DL40Ø
12	HD3-6402C-9		30	CMS	1.0	3.5	0.0	5.0	4.0m	4	8	Clock Freq 1.0MHz max;tpd 190ns max	E2-15	DL40Ø
13	R6522		31	CMS	.80	2.2	0.0	5.0	750m	0	7	VIA;Freq 1.0MHz;8 Bit Data for Commun	E31-2	DL40ab
14	R6522CMT		31	CMS	.80	2.2	0.0	5.0	750m	5	C	VIA;Freq 1.0MHz;8 Bit Data for Commun	E31-2	DL40ab
15	MC3449L		6	DTL	.80	2.0	0.0	5.25	367m	0	7	Triple Bi-Direct. Bus Switch;tpd30ns	E6-9	DL16e
16	MC3449P		6	DTL	.80	2.0	0.0	5.25	367m	0	7	Triple Bi-Direct. Bus Switch;tpd30ns	E6-9	DL16ad
17	10165FC		1	ECL	-1.4	-1.1	5.2	0.0	681m	0	7	8-Input;4 Output;tpd 9.0ns max	E1-11	F16-3
18	10165PC		1	ECL	-1.4	-1.1	5.2	0.0	681m	0	7	8-Input;4 Output;tpd 9.0ns max	E1-11	DL16ak
19	100165DC		1	ECL	-1.4	-1.1	4.5	0.0	693m	0	7	8 or Dual 4-Input;tpd 3.9ns max	E1-12	DL24f
20	100165FC		1	ECL	-1.4	-1.1	4.5	0.0	693m	0	7	8 or Dual 4-Input;tpd 3.9ns max	E1-12	F24-8
21	10014DM		4	ECL	1.65	.98	5.2	0.0	62m	5	C	Active Terminator	E4-3	DL16h
22	10014FC		4	ECL	1.65	.98	5.2	0.0	62m	4	8	Active Terminator	E4-3	F16-3
23	10014FM		4	ECL	1.65	.98	5.2	0.0	62m	5	C	Active Terminator	E4-3	F16-3
24	10014PC		4	ECL	1.65	.98	5.2	0.0	62m	4	8	Active Terminator	E4-3	DL16ak
25	G8863PI#ai		11	GMS	3.5	8.5	15.0	15.0	600m	4	8	DTMF Decoder	E11-69	DL24cb
26	HMRDC-H4-16-2SS		13	HyB		90	15	15	6.2	5	A	Mux Resolver;XFMF Input;400Hz		
27	HMSDC-H4-16-2SS		13	HyB		90	15	15	6.2	5	A	Mux Synchro Conv;SS Input;400Hz		
28	HMSDC-L4-16-2SS		13	HyB		11.8	15	15	6.2	5	A	Mux Synchro Conv;SS Input;400Hz		
29	AY5-2376		14	HyB	0.8	3.5	12	5.0		0	7	Keyboard Encoder;2376 Bit ROM	E14-7	DL40t
30	AY5-3600		14	HyB	0.75	3.9	12	5.0		0	7	Keyboard Encoder;Quad Mode Oper	E14-9	DL40t
31	AY9-9086		11	IIL			0.0	1.5				Dual Tone Multi Freq Generator	E11-28	DL16eg
32	AY9-9600		11	IIL			0.0	1.5	1.0m			Push Button Telephone Dialler	E11-29	DL16eg
33	DAS-8D-LP12B-A1		3	MOS	0.0	12	15	15	600m	0	7	8 Chan Diff;Lin±1/2LSB;Inp Acq Time 1	E3-4	PC1
34	DAS-8D-LP12B-B1		3	MOS	0.0	12	15	15	600m	0	7	8 Chan Diff;Lin±1/2LSB;Inp Acq Time 1	E3-4	PC1
35	DAS-8D-LP12B-C2		3	MOS	0.0	12	15	15	600m	0	7	8 Chan Diff;Lin±1/2LSB;Inp Acq Time 1	E3-4	PC1
36	DAS-8D-LP12B-C3		3	MOS	0.0	12	15	15	600m	0	7	8 Chan Diff;Lin±1/2LSB;Inp Acq Time 1	E3-4	PC1
37	DAS-8D-LP12B-D2		3	MOS	0.0	12	15	15	600m	0	7	8 Chan Diff;Lin±1/2LSB;Inp Acq Time 1	E3-4	PC1
38	DAS-8D-LP12B-D3		3	MOS	0.0	12	15	15	600m	0	7	8 Chan Diff;Lin±1/2LSB;Inp Acq Time 1	E3-4	PC1
39	DAS-16D-LP12B-A1		3	MOS	0.0	12	15	15	240m	0	7	16Chan Diff;Lin ±1/2LSB;InpAcqTime 15	E3-4a	PC1a
40	DAS-16D-LP12B-B1		3	MOS	0.0	12	15	15	240m	0	7	16Chan Diff;Lin ±1/2LSB;InpAcqTime 15	E3-4a	PC1a
41	DAS-16D-LP12B-C2		3	MOS	0.0	12	15	15	240m	0	7	16Chan Diff;Lin ±1/2LSB;InpAcqTime 15	E3-4a	PC1a
42	DAS-16D-LP12B-C3		3	MOS	0.0	12	15	15	240m	0	7	16 Channel;Lin±1/2LSB;Inp Acq Time 15	E3-4a	PC1a
43	DAS-16D-LP12B-D2		3	MOS	0.0	12	15	15	240m	0	7	16Chan Diff;Lin ±1/2LSB;InpAcqTime 15	E3-4a	PC1a
44	DAS-16D-LP12B-D3		3	MOS	0.0	12	15	15	240m	0	7	16Chan;Lin ±1/2LSB;Inp Acq Time 150 u	E3-4a	PC1a
45	DAS-16L-8B1A1		3	MOS			15	15	7.0	0	7	8 Chan,8Bit Bin;0-5V Inp;Acc±.05% of	E3-5	PC2
46	DAS-16L-8B1B1		3	MOS	0.0	12	15	15	7.0	0	7	8Chan,8Bit Binary;0-10V Inp;Acc±.05%	E3-5	PC2
47	DAS-16L-8B1C3		3	MOS			15	15	7.0	0	7	8Chan,8Bit Off Bin;5.0V Inp;Acc±.05%	E3-5	PC2
48	DAS-16L-8B1C4		3	MOS			15	15	7.0	0	7	8Chan,8Bit 2s Comp;5.0V Inp;Acc±.05%	E3-5	PC2
49	DAS-16L-8B1D3		3	MOS			20	15	6.2	0	7	8Chan,8Bit Off Bin;±10V Inp;Acc±.05%	E3-5a	PC2
50	DAS-16L-8B1D4		3	MOS			20	15	6.2	0	7	8Chan,8Bit 2s Comp;±10V Inp;Acc±.05%	E3-5a	PC2
51	DAS-16L-8B2A1		3	MOS			15	15	7.0	0	7	16Chan,8Bit Bin;0-5V Inp;Acc±.05% of	E3-5	PC2
52	DAS-16L-8B2B1		3	MOS			15	15	7.0	0	7	16Chan,8Bit Bin;0-10V Inp;Acc±.05% of	E3-5	PC2
53	DAS-16L-8B2C3		3	MOS			15	15	7.0	0	7	16Chan,8Bit Off Bin;5.0VInp;Acc±.05%	E3-5	PC2
54	DAS-16L-8B2C4		3	MOS			15	15	7.0	0	7	16Chan,8Bit 2s Comp;5.0VInp;Acc±.05%	E3-5	PC2
55	DAS-16L-8B2D4		3	MOS			20	15	6.2	0	7	16Chan,8Bit 2s Comp;±10VInp;Acc±.05%	E3-5a	PC2
56	DAS-16L-8D1A2		3	MOS			15	15	7.0	0	7	8 Chan,2Digit BCD;0-5V Inp;Acc±.05% o	E3-5	PC2
57	DAS-16L-8D1B2		3	MOS			15	15	7.0	0	7	8Chan,2Digit BCD;0-10V Inp;Acc±.05% o	E3-5	PC2
58	DAS-16L-8D2A2		3	MOS			15	15	7.0	0	7	16Chan,2Digit BCD;0-5V Inp;Acc±.05% o	E3-5	PC2
59	DAS-16L-8D2B2		3	MOS			15	15	7.0	0	7	16Chan,2Digit BCD;0-10V Inp;Acc±.05%	E3-5	PC2
60	DAS-16L-10B1A1		3	MOS			15	15	7.0	0	7	8 Chan,10Bit Bin;0-5V Inp;Acc±.05% of	E3-5	PC2
61	DAS-16L-10B1B1		3	MOS	0.0	12	15	15	7.0	0	7	8Chan,10Bit Binary;0-10VInp;Acc±.05%	E3-5	PC2
62	DAS-16L-10B1C3		3	MOS			15	15	7.0	0	7	8Chan,10Bit Off Bin;5.0VInp;Acc±.05%	E3-5	PC2
63	DAS-16L-10B1C4		3	MOS			15	15	7.0	0	7	8Chan,8Bit 2s Comp;5.0V Inp;Acc±.05%	E3-5	PC2
64	DAS-16L-10B1D3		3	MOS			20	15	6.2	0	7	8Chan,10Bit Off Bin;±10VInp;Acc±.05%	E3-5a	PC2
65	DAS-16L-10B1D4		3	MOS			20	15	6.2	0	7	8Chan,8Bit 2s Comp;±10V Inp;Acc±.05%	E3-5a	PC2
66	DAS-16L-10B2A1		3	MOS			15	15	7.0	0	7	16Chan,10Bit Bin;0-5V Inp;Acc±.05% of	E3-5	PC2
67	DAS-16L-10B2B1		3	MOS			15	15	7.0	0	7	16Chan,10Bit Bin;0-10V Inp;Acc±.05% o	E3-5	PC2
68	DAS-16L-10B2C3		3	MOS			15	15	7.0	0	7	16 Chan,10Bit Off Bin;5.0VInp;Acc±.05	E3-5	PC2
69	DAS-16L-10B2C4		3	MOS			15	15	7.0	0	7	16 Chan,8Bit 2sComp;5.0VInp;Acc±.05%	E3-5	PC2
70	DAS-16L-10B2D3		3	MOS			20	15	6.2	0	7	16 Chan,10Bit Off Bin;±10VInp;Acc±.05	E3-5a	PC2
71	DAS-16L-10B2D4		3	MOS			20	15	6.2	0	7	16 Chan,8Bit 2sComp;±10VInp;Acc±.05%	E3-5a	PC2
72	DAS-16L-12B1A1		3	MOS			15	15	7.0	0	7	8 Chan,12Bit Bin;0-5V Inp;Acc±.05% of	E3-5	PC2
73	DAS-16L-12B1B1		3	MOS	0.0	12	15	15	7.0	0	7	8Chan,12Bit Binary;0-10VInp;Acc±.05%	E3-5	PC2
74	DAS-16L-12B1C3		3	MOS			15	15	7.0	0	7	8Chan,10Bit Off Bin;5.0VInp;Acc±.05%	E3-5	PC2
75	DAS-16L-12B1C4		3	MOS			15	15	7.0	0	7	8Chan,8Bit 2s Comp;5.0V Inp;Acc±.05%	E3-5	PC2
76	DAS-16L-12B1D3		3	MOS			20	15	6.2	0	7	8Chan,10Bit Off Bin;±10VInp;Acc±.05%	E3-5a	PC2
77	DAS-16L-12B1D4		3	MOS			20	15	6.2	0	7	8Chan,8Bit 2s Comp;±10V Inp;Acc±.05%	E3-5a	PC2
78	DAS-16L-12B2A1		3	MOS			15	15	7.0	0	7	16Chan,12Bit Bin;0-5V Inp;Acc±.05% of	E3-5	PC2
79	DAS-16L-12B2B1		3	MOS			15	15	7.0	0	7	16Chan,12Bit Bin;0-10V Inp;Acc±.05% o	E3-5	PC2
80	DAS-16L-12B2C3		3	MOS			15	15	7.0	0	7	16 Chan,10Bit Off Bin;5.0VInp;Acc±.05	E3-5	PC2
81	DAS-16L-12B2C4		3	MOS			15	15	7.0	0	7	16 Chan,8Bit 2sComp;5.0VInp;Acc±.05%	E3-5	PC2
82	DAS-16L-12B2D3		3	MOS			20	15	6.2	0	7	16 Chan,10Bit Off Bin;±10VInp;Acc±.05	E3-5a	PC2
83	DAS-16L-12B2D4		3	MOS			20	15	6.2	0	7	16 Chan,8Bit 2s Comp;±10VInp;Acc±.05%	E3-5a	PC2
84	DAS-16L-12D1A2		3	MOS			15	15	7.0	0	7	8 Chan,3Digit BCD;0-5V Inp;Acc±.05% o	E3-5	PC2
85	DAS-16L-12D1B2		3	MOS			15	15	7.0	0	7	8Chan,3Digit BCD;0-10V Inp;Acc±.05% o	E3-5	PC2
86	DAS-16L-12D2A2		3	MOS			15	15	7.0	0	7	16Chan,3Digit BCD;0-5V Inp;Acc±.05% o	E3-5	PC2
87	DAS-16L-12D2B2		3	MOS			15	15	7.0	0	7	16Chan,3Digit BCD;0-10V Inp;Acc±.05%	E3-5	PC2
88	DAS-16M-8B1A1		3	MOS			15	15	7.0	0	7	8 Chan,8 Bit Bin;0-5V Inp;Acc±.025% o	E3-5	PC2
89	DAS-16M-8B1B1		3	MOS			15	15	7.0	0	7	8 Chan,8Bit Bin;0-10V Inp;Acc±.025% o	E3-5	PC2
90	DAS-16M-8B1C3		3	MOS			15	15	7.0	0	7	8Chan;8Bit Off Bin;5.0VInp;Acc±.025%o	E3-5	PC2
91	DAS-16M-8B1C4		3	MOS			15	15	7.0	0	7	8Chan,8Bit 2s Comp;5.0VInp;Acc±.025%	E3-5	PC2
92	DAS-16M-8B1D3		3	MOS			20	15	6.2	0	7	8Chan,8Bit Off Bin;±10V Inp;Acc±.025%	E3-5a	PC2
93	DAS-16M-8B1D4		3	MOS			20	15	6.2	0	7	8Chan,8Bit 2s Comp;±10VInp;Acc±.025%	E3-5a	PC2
94	DAS-16M-8B2A1		3	MOS			15	15	7.0	0	7	16Chan,8Bit Bin;0-5V Inp;Acc±.025% of	E3-5	PC2
95	DAS-16M-8B2B1		3	MOS			15	15	7.0	0	7	16Chan,8Bit Bin;0-10V Inp;Acc±.025% o	E3-5	PC2
96	DAS-16M-8B2C3		3	MOS			15	15	7.0	0	7	16Chan,8Bit Off Bin;5.0VInp;Acc±.025%	E3-5	PC2
97	DAS-16M-8B2C4		3	MOS			15	15	7.0	0	7	16Chan,8Bit 2s Comp;5.0VInp;Acc±.025%	E3-5	PC2
98	DAS-16M-8B2D3		3	MOS			20	15	6.2	0	7	16Chan,8Bit Off Bin;±10VInp;Acc±.025%	E3-5a	PC2
99	DAS-16M-8B2D4		3	MOS			20	15	6.2	0	7	16Chan,8Bit 2s Comp;±10VInp;Acc±.025%	E3-5a	PC2
100	DAS-16M-8D1A2		3	MOS			15	15	7.0	0	7	8Chan,2Digit BCD;0-5V Inp;Acc±.025% o	E3-5	PC2
101	DAS-16M-8D1B2		3	MOS			15	15	7.0	0	7	8Chan,2Digit BCD;0-10V Inp;Acc±.025%	E3-5	PC2
102	DAS-16M-8D2A2		3	MOS			15	15	7.0	0	7	16Chan,2Digit BCD;0-5VInp;Acc±.025% o	E3-5	PC2
103	DAS-16M-8D2B2		3	MOS			15	15	7.0	0	7	16Chan,2 Digit BCD;0-10VInp;Acc±.025%	E3-5	PC2
104	DAS-16M-10B1A1		3	MOS			15	15	7.0	0	7	8Chan,10Bit Bin;0-5V Inp;Acc±.025% of	E3-5	PC2

SYMBOLS AND CODES EXPLAINED IN INTERPRETER

20. SPECIAL DEVICES

IN ORDER OF: (1)TECHN (2)TYPE CODE & (3)TYPE NUMBER

LINE No.	3 TYPE NUMBER	DATA SHT.	2 TYPE CODE	1 TECHN	INPUT LOGIC LEVELS MAX '0' (V)	INPUT LOGIC LEVELS MIN '1' (V)	RATED PWR SUPPLY SPAN NEG (V)	RATED PWR SUPPLY SPAN POS (V)	MAX OPER POWER DISS (W)	OPER TEMP RANGE CODE -	OPER TEMP RANGE CODE +	GENERAL DESCRIPTION	DRAWINGS LOGIC OR BLOCK	DRAWINGS OUTLINE Δ=MO
1	DAS-16M-10B1B1		3	MOS			15	15	7.0	0	7	8Chan,10Bit Bin;0-10V Inp;Acc±.025% o	E3-5	PC2
2	DAS-16M-10B1C3		3	MOS			15	15	7.0	0	7	8Chan,10Bit Off Bin;5.0VInp;Acc±.025%	E3-5	PC2
3	DAS-16M-10B1C4		3	MOS			15	15	7.0	0	7	8Chan,8Bit 2s Comp;5.0VInp;Acc±.025%	E3-5	PC2
4	DAS-16M-10B1D3		3	MOS			20	15	6.2	0	7	8Chan,10Bit Off Bin;±10VInp;Acc±.025%	E3-5a	PC2
5	DAS-16M-10B1D4		3	MOS			20	15	6.2	0	7	8Chan,8Bit 2s Comp;±10VInp;Acc±.025%	E3-5a	PC2
6	DAS-16M-10B2A1		3	MOS			15	15	7.0	0	7	16Chan,10Bit Bin;0-5V Inp;Acc±.025% o	E3-5	PC2
7	DAS-16M-10B2B1		3	MOS			15	15	7.0	0	7	16Chan,10Bit Bin;0-10VInp;Acc±.025% o	E3-5	PC2
8	DAS-16M-10B2C3		3	MOS			15	15	7.0	0	7	16Chan,10Bit Off Bin;5.0VInp;Acc±.025	E3-5	PC2
9	DAS-16M-10B2C4		3	MOS			15	15	7.0	0	7	16Chan,8Bit 2s Comp;5.0VInp;Acc±.025%	E3-5	PC2
10	DAS-16M-10B2D3		3	MOS			20	15	6.2	0	7	16Chan,10Bit Off Bin;±10VInp;Acc±.025	E3-5a	PC2
11	DAS-16M-10B2D4		3	MOS			20	15	6.2	0	7	16Chan,8Bit 2s Comp;±10VInp;Acc±.025%	E3-5a	PC2
12	DAS-16M-12B1A1		3	MOS			15	15	7.0	0	7	8Chan,12Bit Bin;0-5V Inp;Acc±.025% of	E3-5	PC2
13	DAS-16M-12B1B1		3	MOS			15	15	7.0	0	7	8Chan,12Bit Bin;0-10V Inp;Acc±.025% o	E3-5	PC2
14	DAS-16M-12B1C3		3	MOS			15	15	7.0	0	7	8Chan,10Bit Off Bin;5.0VInp;Acc±.025%	E3-5	PC2
15	DAS-16M-12B1C4		3	MOS			15	15	7.0	0	7	8Chan,8Bit 2s Comp;5.0VInp;Acc±.025%	E3-5	PC2
16	DAS-16M-12B1D3		3	MOS			20	15	6.2	0	7	8Chan,10Bit Off Bin;±10VInp;Acc±.025%	E3-5a	PC2
17	DAS-16M-12B1D4		3	MOS			20	15	6.2	0	7	8Chan,8Bit 2s Comp;±10V Inp;Acc±.025%	E3-5a	PC2
18	DAS-16M-12B2A1		3	MOS			15	15	7.0	0	7	16Chan,12Bit Bin;0-5V Inp;Acc±.025% o	E3-5	PC2
19	DAS-16M-12B2B1		3	MOS			15	15	7.0	0	7	16Chan,12Bit Bin;0-10V Inp;Acc±.025%	E3-5	PC2
20	DAS-16M-12B2C3		3	MOS			15	15	7.0	0	7	16Chan,10Bit Off Bin;5.0VInp;Acc±.025	E3-5	PC2
21	DAS-16M-12B2C4		3	MOS			15	15	7.0	0	7	16Chan,8Bit 2s Comp;5.0VInp;Acc±.025%	E3-5	PC2
22	DAS-16M-12B2D3		3	MOS			20	15	6.2	0	7	16Chan,10Bit Off Bin;±10VInp;Acc±.025	E3-5a	PC2
23	DAS-16M-12B2D4		3	MOS			20	15	6.2	0	7	16Chan,8Bit 2s Comp;±10VInp;Acc±.025%	E3-5a	PC2
24	DAS-16M-12D1A2		3	MOS			15	15	7.0	0	7	8Chan,3Digit BCD;0-5V Inp;Acc±.025% o	E3-5	PC2
25	DAS-16M-12D1B2		3	MOS			15	15	7.0	0	7	8Chan,3Digit BCD;0-10V Inp;Acc±.025%	E3-5	PC2
26	DAS-16M-12D2A2		3	MOS			15	15	7.0	0	7	16Chan,3Digit BCD;0-5VInp;Acc±.025% o	E3-5	PC2
27	DAS-16M-12D2B2		3	MOS			15	15	7.0	0	7	16Chan,3 Digit BCD;0-10VInp;Acc±.025%	E3-5	PC2
28	AY5-8460		6	MOS	8.0	10.5	6.0	12		0	7	Remote Centr. Rcvr;16 Channel	E6-49	DL18ah
29	AY5-3507		7	MOS	-18	.30	18	0.0	500m	0	7	3 1/2 Digit DVM;7 Segment Out	E7-58	DL18ah
30	AY5-3510		7	MOS	-24	.30	24	0.0	500m	0	7	3 1/2 Digit DVM;BCD Out	E7-58a	DL16eg
31	ICL8053ACDD		7	MOS			15	5.0	500m	0	7	4-1/2 Digit A/D Pair w/ICL 8052 ACDD	E7-23a	DL14af
32	ICL8053CDD		7	MOS			15	5.0	500m	0	7	3-1/2 Digit A/D Pair w/ICL 8052 CDD	E7-23a	DL14af
33	LD110CJ		7	MOS	.40	2.4	12	5.0	750m	0	7	9Bit A/D Converter Set w/LD111CJ	E7-19a	DL16as
34	LD110CP		7	MOS	.40	2.4	12	5.0	750m	0	7	9Bit A/D Converter Set w/LD111CP	E7-19a	DL16ct
35	S1907A		7	MOS	-6.0	-1.0	30	.30		0	7	3-1/2 DVM Counter/Display Driver	E7-26	D40-5
36	MK5170N		11	MOS	0.8	2.0	0	5	1.0	0	7	Repertory Dialer	E11-54	DL40Ø
37	MT8860AD		11	MOS	0.0	5.0	0	15		5	C	DTMF Decoder;Detects,Decodes 16 Tone	E11-39	
38	MT8860AY		11	MOS	0.0	5.0	0	15		4	8	DTMF Decoder;Detects,Decodes 16 Tone	E11-39	
39	MT8865AD		11	MOS	1.0	4.0	0	12	850m	5	C	DTMF Filter;has Hi,Low Group Filterin		DL16cp
40	MT8865AY		11	MOS	1.0	4.0	0	12	850m	4	8	DTMF Filter;has Hi,Low Group Filterin		DL18q
41	NC2030		11	MOS	-13	5.2	8.0	5.0	200m	0	7	DTMF Detector	E11-130	DL14cp
42	S3503C		17	MOS								Single Ch A-Law PCM CODEC Filter	E17-6	
43	S3503D		17	MOS								Single Ch A-Law PCM CODEC Filter	E17-6	
44	S3503P		17	MOS								Single Ch A-Law PCM CODEC Filter	E17-6	
45	S3504C		17	MOS								Single Ch A-Law PCM CODEC Filter	E17-7	
46	S3504D		17	MOS								Single Ch A-Law PCM CODEC Filter	E17-7	
47	S3504P		17	MOS								Single Ch A-Law PCM CODEC Filter	E17-7	
48	S2814A		25	MOS	.8	2.0	0.0	5.0	1.8	0	7	Signal Process; Peripheral, Microcomp	E25-5	
49	2637N		6	NMS	0.8	2.2	0.0			0	5	Universal Video IF; 280nSec Resolutio		
50	EF68A50CP		6	NMS	0.8	2.0	0.0	5.0		4	8	Asycn Comm Inter Adap;1.5MHz;500kbps	E6-44	DL24ap
51	EF6850CP		6	NMS	0.8	2.0	0.0	5.0		4	8	Asycn Comm Inter Adapter;1MHz;500kbps	E6-44	DL24ap
52	MC6527P		6	NMS	1.5	4.0	4.0	12	600m	0	7	Remote Control Rec;Up to 22 Contr Cha	E6-14	DL28c
53	MC6529P		6	NMS	1.5	4.0	4.0	12	600m	0	7	Remote Control Rec;Up to 26 Contr Cha	E6-14a	DL28c
54	MK5201		6	NMS	.80	2.0	5.0	12	185m	0	7	PCM Transmit/Receive Filters	E6-27	DL16an
55	uPD8243		6	NMS	0.8	2.0	0.0	5.0	1.0	0	7	I/O Expander;uPD8040 Compat;4-Bit I/O		DL24bo
56	AY3-3550		7	NMS	.70	4.0	0.0	5.0	60m	0	7	4 3/4 Digit Multi-Meter/Counter	E7-56	DL40d
57	2910		11	NMS	.80	2.0	5.0	12	1.4	0	7	PCM Codec,u Law,Conv Time 30us	E11-9	D24Ø
58	2911		11	NMS	.80	2.0	5.0	12	1.4	0	7	PCM Codec,A Law,Conv Time 40us	E11-10	D22Ø
59	AY3-9401		11	NMS	.40	3.3	0.0	4.0	80m	2	7	Dual Tone Multi Freq Gen	E11-22	DL16eg
60	SM301		11	NMS			0.0	5.0				Receiver;Codec;MFV Code		DL24ao
61	SM61A1		17	NMS			0.0	12	75m	2	7	PCM 2-Chan Codec;Pwr Down Mode		DL24bd
62	SM61A		17	NMS			0.0	12	300m	2	7	PCM 2-Chan Codec;Out Load ITTL		
63	MC6859		26	NMS	0.8	2.0	0.0	5.0	1.0	0	7	Data Security Device;Crypto Algorithm	E26-2	DL24ay
64	MC68230		28	NMS								Programmable Parallel Interface/Timer		
65	AY3-1014A		30	NMS	.80	3.0	0.0	14	280m	0	7	Full Duplex;30k Baud,480kHz max	E2-8a	DL40d
66	SND5025		30	NMS	.80	2.0	0.0	12		0	7	USYNR/T; Multi-protocal,selectable	E30-11	DL40aj
67	SND5035		30	NMS	0.8	2.0	5	12	1.1	0	7	Univ Sync Rx/Tx;Dbl Buff;Select Proto		
68	uc1671-00A		30	NMS	0.8	2.4	5	12	1.0	0	7	Asynchronous,Synchronous Comm I/F	E30-23	DL40bd
69	uc1671-00B		30	NMS	0.8	2.4	5	12	1.0	0	7	Asynchronous,Synchronous Comm I/F	E30-23	DL40bf
70	uc1671-00CL		30	NMS	0.8	2.4	5	12	1.0	0	7	Asynchronous,Synchronous Comm I/F	E30-23	DL40bg
71	uPD8251		30	NMS	0.8	2.0	0.0	5.0		0	7	USART;Baud Rate Syn.DC-56K		DL28ak
72	uPD8251A		30	NMS	0.8	2.0	0.0	5.0		0	7	USART;Baud Rate Syn.DC-64K		DL28ak
73	uPD8251AC		30	NMS	.80	2.0	0.0	5.0		0	7	Prog Communication Interfaces	E6-31	DL40a
74	uPD8251AD		30	NMS	.80	2.0	0.0	5.0		0	7	Prog Communication Interfaces	E6-31	DL40a
75	uPD8251C		30	NMS	.80	2.0	0.0	5.0		0	7	Prog Communication Interfaces	E6-31a	DL40a
76	uPD8251D		30	NMS	.80	2.0	0.0	5.0		0	7	Prog Communication Interfaces	E6-31a	DL40a
77	R6520		31	NMS	.80	2.0	0.0	5.0	500m	0	7	PIA;Freq Range 1.0MHz	E31-1	
78	R6520AE		31	NMS	.80	2.0	0.0	5.0	500m	4	8	PIA;Freq 2.0MHz;Depletion Load Tech	E31-1	
79	R6520AM		31	NMS	.80	2.0	0.0	5.0	500m	5	C	PIA;Freq 2.0MHz;Depletion Load Tech	E31-1	
80	R6520AMT		31	NMS	.80	2.0	0.0	5.0	500m	5	C	PIA;Freq 2.0MHz;Depletion Load Tech	E31-1	
81	R6520E		31	NMS	.80	2.0	0.0	5.0	500m	0	8	PIA;Freq Range 1.0MHz	E31-1	
82	R6520M		31	NMS	.80	2.0	0.0	5.0	500m	5	C	PIA;Freq Range 1.0MHz	E31-1	
83	R6520MT		31	NMS	.80	2.0	0.0	5.0	500m	5	C	PIA;Freq 1.0MHz;Depletion Load Tech	E31-1	
84	MC68120L		41	NMS	0.8	2.0	0.0	5.0	1.2	0	7	Intelligent,Gen Purpose,Mask Programm	E29-1	DL48a
85	MC68121L		41	NMS	0.8	2.0	0.0	5.0	1.2	0	7	MC68120L Without On-Chip ROM	E29-1	DL48a
86	SFF96364AE		45	NMS	0.65	2.20	0.0	5.0	1.0	0	7	CRT Display using standard TV set	E45-7	
87	SFF96364AK		45	NMS	0.65	2.20	0.0	5.0	1.0	0	7	CRT Display using standard TV set	E45-7	
88	SFF96364BE		45	NMS	0.65	2.20	0.0	5.0	1.0	0	7	CRT Display using standard TV set	E45-7	
89	SFF96364BK		45	NMS	0.65	2.20	0.0	5.0	1.0	0	7	CRT Display using standard TV set	E45-7	
90	MC2652L		48	NMS	0.8	2.0	0.0	5.0		0	7	Multi-Protocol Communication Control	E6-52	DL40b
91	MC2652P2		48	NMS	0.8	2.0	0.0	5.0		0	7	Multi-Protocol Communication Control	E6-52	DL40j
92	MC2652P		48	NMS	0.8	2.0	0.0	5.0		0	7	Multi-Protocol Communication Control	E6-52	DL40j
93	MC2652S2		48	NMS	0.8	2.0	0.0	5.0		0	7	Multi-Protocol Communication Control	E6-52	DL40e
94	MC2652S		48	NMS	0.8	2.0	0.0	5.0		0	7	Multi-Protocol Communication Control	E6-52	DL40e
95	SAA5020		50	NMS	0.8	2.0		7.5		2	7	Teletext Timing Chain	E50-1	DL24am
96	AY5-1012		2	PMS	.80	3.5	12	5.0	224m	0	7	Full Duplex;20k Baud(320kHz Clock)min	E2-5	DL40d
97	AY5-8450		6	PMS			10	0.0		1	7	30 Chan R/C X-mitter usew/AY5-8460	E6-61	DL16fg
98	AY5-3500		7	PMS	-1.0	-4.0	15	0.0	45m	0	7	3 3/4 Digit DVM,Dual Polarity	E7-57	DL28b
99	LD111CJ		7	PMS	.40	2.4	12	12	750m	0	7	9 Bit A/D Converter Set w/110CJ	E7-19	DL16as
100	LD111CJ#		7	PMS	.40	2.4	12	12	750m	0	7	A/D 3 1/2 Digit;17 Latches	E7-9a	DL16ca
101	LD111CP		7	PMS	.40	2.4	12	12	750m	0	7	9Bit A/D Converter Set w/110CP	E7-19	DL16ct
102	LD114CR		7	PMS	.40	2.4	12	5.0	1.2	0	7	10 Bit A/D Converter Set w/LD111	E7-19b	DL28y
103	LD114CR#		7	PMS	.40	2.4	12	12	1.2	0	7	A/D 3 1/2 Digit;17 Latches	E7-9	DL28u
104	LD121A		7	PMS	0.5	4.0	12	12	750m	0	7	A/D 4 1/2 Digit;Synchronous Processor	E7-10	DL18e
105	LD121CJ		7	PMS	.50	2.4	12	12	750m	0	7	A/D 4-1/2 Digit;5 Samples/Sec max	E7-10	DL18e
106	S9260P		9	PMS	0.0	-12	18	0.0	270m	0	7	Up to 7 Momentary or Toggle Selectabl	E9-1	DL22n
107	S9261P		9	PMS	0.0	-12	18	0.0	270m	0	7	4 Momentary,3 Selectable Switches	E9-1	DL22n
108	S9262P		9	PMS	0.0	-12	18	0.0	270m	0	7	Multiplexed 2x7 Selectable Mode Switc	E9-2	DL22n
109	S9263P		9	PMS	0.0	-12	18	0.0	270m	0	7	Up to 16 Momentary or Toggle Selectab	E9-3	DL40s
110	S9264P		9	PMS	0.0	-12	18	0.0	270m	0	7	8 Momentary,8 Selectable Switches	E9-3	DL40s

SYMBOLS AND CODES EXPLAINED IN INTERPRETER

20. SPECIAL DEVICES

IN ORDER OF: (1)TECHN (2)TYPE CODE & (3)TYPE NUMBER

LINE No.	3 TYPE NUMBER	DATA SHT.	2 TYPE CODE	1 TECHN	INPUT LOGIC LEVELS MAX '0' (V)	INPUT LOGIC LEVELS MIN '1' (V)	RATED PWR SUPPLY SPAN NEG (V)	RATED PWR SUPPLY SPAN POS (V)	MAX OPER POWER DISS (W)	OPER TEMP RANGE CODE -	OPER TEMP RANGE CODE +	GENERAL DESCRIPTION	DRAWINGS LOGIC OR BLOCK	DRAWINGS OUTLINE Δ=MO
1	S9265P		9	PMS	0.0	-12	18	0.0	270m	0	7	4 Momentary,12 Selectable Switches	E9-3	DL40s
2	S9266P		9	PMS	0.0	-12	18	0.0	270m	0	7	Multiplexed 2x16 Selectable Mode Swit	E9-4	DL40s
3	AY5-9801		11	PMS	-1.0	-3.7	17	0.0	350m	2	7	Dual Tone Multi Freq Rec;Out Code:4-B	E11-27	DL28b
4	AY5-9802		11	PMS	-1.0	-3.7	17	0.0	350m	2	7	Dual Tone Multi Freq Rec	E11-27a	DL40d
5	AY5-9803		11	PMS	-1.0	-3.7	17	0.0	350m	2	7	Dual Tone Multi Freq Rec		DL40d
6	AY5-9804		11	PMS	-1.0	-3.7	17	0.0	350m	2	7	Dual Tone Multi Freq Rec	E11-27	DL28b
7	AY5-9805		11	PMS	-1.0	-3.7	17	0.0	350m	2	7	Dual Tone Multi Freq Rec;Out Code:4-B	E11-27b	DL24bm
8	AY5-9806		11	PMS	-1.0	-3.7	17	0.0	350m	2	7	Dual Tone Multi Freq Rec;Out Code:1 o		DL40d
9	AY5-9807		11	PMS	-1.0	-3.7	17	0.0	350m	2	7	Dual Tone Multi Freq Rec		DL24bm
10	AY5-9808		11	PMS	-1.0	-3.7	17	0.0	350m	2	7	Dual Tone Multi Freq Rec	E11-27b	DL24bm
11	AY5-9821		11	PMS	-1.0	-3.7	17	0.0	350m	2	7	Dual Tone Multi Freq Rec;Out Code:4-B	E11-27	D28-3g
12	AY5-9822		11	PMS	-1.0	-3.7	17	0.0	350m	2	7	Dual Tone Multi Freq Rec;Out Code:1 o	E11-27a	D40-17
13	AY5-9823		11	PMS	-1.0	-3.7	17	0.0	350m	2	7	Dual Tone Multi Freq Rec;Out Code:2 o		D40-17
14	AY5-9824		11	PMS	-1.0	-3.7	17	0.0	350m	2	7	Dual Tone Multi Freq Rec;Out Code:Bin	E11-27	D28-3g
15	AY5-9825		11	PMS	-1.0	-3.7	17	0.0	350m	2	7	Dual Tone Multi Freq Rec;Out Code:4-B	E11-27b	DL24h
16	AY5-9826		11	PMS	-1.0	-3.7	17	0.0	350m	2	7	Dual Tone Multi Freq Rec;Out Code:1 o		D40-17
17	AY5-9827		11	PMS	-1.0	-3.7	17	0.0	350m	2	7	Dual Tone Multi Freq Rec;Out Code:2 o		DL24h
18	AY5-9828		11	PMS	-1.0	-3.7	17	0.0	350m	2	7	Dual Tone Multi Freq Rec;Out Code:Bin	E11-27b	DL24h
19	U145M		11	PMS	0.8	3.5	24	5.0	780m	0	7	Cross Point Switches for PABEX	E11-104	Δ015AH
20	S600E5		14	PMS		-1.5	20	0.0	800m	2	7	Keyboard Encoder w/Buffer		
21	S600E5P		14	PMS		-1.5	20	0.0	800m	2	7	Keyboard Encoder w/Buffer		
22	AY5-1013A		30	PMS	.80	3.5	12	5.0	292m	0	7	Full Duplex;40k Baud,640kHz max	E2-8	DL40d
23	AY6-1013		30	PMS	.80	3.5	12	5.0	343m	4	8	Full Duplex;22.5k Baud,360kHz max	E2-8	DL40d
24	MN120		7	TFT			50	50		5	C	13 Bit 50k/100k Ladder Netwk;TC 50ppm	E7-24	DL16cx
25	MN121		7	TFT			50	50		5	C	12 Bit 50k/100k Ladder Netwk;TC 50ppm	E7-25	DL16cx
26	MN121-10		7	TFT			50	50		5	C	10 Bit 50k/100k Ladder Netwk;TC 50ppm	E7-25	DL16cx
27	MN121-11		7	TFT			50	50		5	C	11 Bit 50k/100k Ladder Netwk;TC 50ppm	E7-25	DL16cx
28	MN160		7	TFT			50	50		5	C	12 Bit 10k/20k Ladder Netwk;TC 50ppm/	E7-25	DL16cx
29	MN160-10		7	TFT			50	50		5	C	10 Bit 10k/20k Ladder Netwk;TC 50ppm/	E7-25	DL16cx
30	MN160-11		7	TFT			50	50		5	C	11 Bit 10k/20k Ladder Netwk;TC 50ppm/	E7-25	DL16cx
31	93L18FC		1	TTL	.80	2.0	0.0	5.0	110m	0	7	8 Input,3 Output;tpd 60ns max	54-148W	F16-3
32	9318FC		1	TTL	.80	2.0	0.0	5.0	385m	0	7	8 Inp,3 Out;VoH 2.4,VoL .40	54-148W	F16-3
33	MC8318L		1	TTL	.85	1.8	0.0	5.0	225m	0	7	8 inp,3 out;VOH 2.4min,VOL .45max	74-148N	DL16e
34	MC8318P		1	TTL	.85	1.8	0.0	5.0	225m	0	7	8 inp,3 out;VOH 2.4min,VOL .45max	74-148N	DL16ad
35	MC9318L		1	TTL	.90	1.7	0.0	5.0	225m	5	C	8 inp,3 out;VOH 2.4min,VOL .40max	74-148N	DL16e
36	SFC4148E		1	TTL	.80	2.0	0.0	5.25	420m	0	7	8 input,3 output,tpd 40ns max	74-148N	D16-13a
37	SFC4148EM		1	TTL	.80	2.0	0.0	5.5	440m	5	C	8 input,3 output,tpd 40ns max	74-148N	D16-13a
38	SFC4148ET		1	TTL	.80	2.0	0.0	5.25	420m	2	8	8 input,3 output,tpd 40ns max	74-148N	D16-13a
39	SFC4148JM		1	TTL	.80	2.0	0.0	5.5	440m	5	C	8 input,3 output,tpd 40ns max	74-148N	DL18i
40	SFC4148KM		1	TTL	.80	2.0	0.0	5.5	440m	5	C	8 input,3 output,tpd 40ns max	74-148N	D16-13a
41	DAS-250		3	TTL			15	15		0	7	16 Chan,12 Bit;10V,±5V Inp;Acq Time 2		
42	DT2009		3	TTL			15	15		0	7	Data Acq. Module; 12-Bits; 16SE/8DI C		
43	DT2010		3	TTL						0	7	Data Acq. Module; Current Input 4-20m		
44	DT5720		3	TTL			15	15		0	7	Data Acq. Module; High Speed; 12 Bits		
45	DT6812		3	TTL			15	15		0	7	Data Acq Module; 12-Bits		
46	MDAS-PG8D		3	TTL			15	15		0	7	8 Chan,12 Bit Differential;Prog Gain		
47	MDAS-PG16D		3	TTL			15	15		0	7	16 Chan,12 Bit Single Ended;Prog Gain		
48	MN7000		3	TTL	10	10	15	15		0	7	Tri State	E329	
49	MN7000H		3	TTL	10	10	15	15		5	C	Tri State;	E3-29	
50	MN7002		3	TTL	10	10	15	15		0	7	Tri State;Expandable to 256 Channels	E329	
51	MN7002H		3	TTL	10	10	15	15		5	C	Tri State;Expandable to 256 Channels	E3-29	
52	MC8507L		6	TTL	.50	2.4	0.0	5.0	585m	0	7	Priority,VOH-.4-7.0V,IIL -1.3uA max	E6-1	DL24k
53	MC8507P		6	TTL	.50	2.4	0.0	5.0	585m	0	7	Priority,VOH-.4-7.0V,IIL -1.3uA max	E6-1	DL24q
54	XC3448		6	TTL	.80	1.8	0.0	5.0	600m	0	7	Bidirect,488 Instrument Bus Transceiv	E6-19	DL16ad
55	54LS502DM		7	TTL	.70	2.0	0.0	5.0	325m	5	C	8-Bit Succ Approx Register	E7-52	DL16h
56	54LS502FM		7	TTL	.70	2.0	0.0	5.0	325m	5	C	8-Bit Succ Approx Register	E7-52	F16-3
57	54LS503DM		7	TTL	.70	2.0	0.0	5.0	325m	5	C	8-Bit Succ Approx Reg W/Exp Control	E7-53	DL16h
58	54LS503FM		7	TTL	.70	2.0	0.0	5.0	325m	5	C	8-Bit Succ Approx Reg W/Exp Control	E7-53	F16-3
59	54LS504DM		7	TTL	.70	2.0	0.0	5.0	450m	5	C	12-Bit Succ.Approx Reg W/EXP Cont	E7-18b	DL24e
60	54LS504FM		7	TTL	.70	2.0	0.0	5.0	450m	5	C	12-Bit Succ.Approx Reg W/EXP Cont	E7-18b	F24-4
61	74LS502FC		7	TTL	.80	2.0	0.0	5.0	325m	0	7	8-Bit Succ Approx Register	E7-52	F16-3
62	74LS503FC		7	TTL	.80	2.0	0.0	5.0	325m	0	7	8-Bit Succ Approx Reg W/Exp Control	E7-53	F16-3
63	74LS504FC		7	TTL	.80	2.0	0.0	5.0	450m	0	7	12-Bit Succ.Approx Reg W/EXP Cont	E7-18b	F24-4
64	2502C/D		7	TTL	.80	2.0	0.0	5.0	475m	0	7	8Bit Successive Approx. Registers	E7-18	CH12
65	2502CJE		7	TTL	.80	2.0	0.0	5.0	475m	0	7	8Bit Successive Approx. Registers	E7-18	DL16cc
66	2502CPE		7	TTL	.80	2.0	0.0	5.0	475m	0	7	8Bit Successive Approx. Registers	E7-18	DL16ao
67	2502M/D		7	TTL	.80	2.0	0.0	5.0	425m	5	C	8Bit Successive Approx. Registers	E7-18	CH12
68	2502MJE		7	TTL	.80	2.0	0.0	5.0	425m	5	C	8Bit Successive Approx. Registers	E7-18	DL16cc
69	2503C/D		7	TTL	.80	2.0	0.0	5.0	450m	0	7	8Bit Successive Approx. Registers	E7-18a	CH12
70	2503CJE		7	TTL	.80	2.0	0.0	5.0	450m	0	7	8Bit Successive Approx. Registers	E7-18a	DL16cc
71	2503CPE		7	TTL	.80	2.0	0.0	5.0	450m	0	7	8Bit Successive Approx. Registers	E7-18a	DL16ao
72	2503M/D		7	TTL	.80	2.0	0.0	5.0	400m	5	C	8Bit Successive Approx. Registers	E7-18a	CH12
73	2503MJE		7	TTL	.80	2.0	0.0	5.0	400m	5	C	8Bit Successive Approx. Registers	E7-18a	DL16cc
74	2504C/D		7	TTL	.80	2.0	0.0	5.0	625m	0	7	12Bit Successive Approx. Registers	E7-18b	CH12
75	2504CJG		7	TTL	.80	2.0	0.0	5.0	625m	0	7	12Bit Successive Approx. Registers	E7-18b	DL24bh
76	2504CPE		7	TTL	.80	2.0	0.0	5.0	625m	0	7	12Bit Successive Approx. Registers	E7-18b	DL16ao
77	2504M/D		7	TTL	.80	2.0	0.0	5.0	550m	5	C	12Bit Successive Approx. Registers	E7-18b	CH12
78	2504MJG		7	TTL	.80	2.0	0.0	5.0	550m	5	C	12Bit Successive Approx. Registers	E7-18b	DL24bh
79	AD550JD		7	TTL	.80	2.0	15	5.0	195m	0	7	Quad Curr Sw For DAC;Acc 1.0%max		TO116
80	AD550JF		7	TTL	.80	2.0	15	5.0	195m	0	7	Quad Curr Sw For DAC;Acc 1.0%max		TO87
81	AD550KD		7	TTL	.80	2.0	15	5.0	195m	0	7	Quad Curr Sw For DAC;Acc .10%max		TO116
82	AD550KF		7	TTL	.80	2.0	15	5.0	195m	0	7	Quad Curr Sw For DAC;Acc .10%max		TO87
83	AD550LD		7	TTL	.80	2.0	15	5.0	195m	0	7	Quad Curr Sw For DAC;Acc .01%max		TO116
84	AD550LF		7	TTL	.80	2.0	15	5.0	195m	0	7	Quad Curr Sw For DAC;Acc .01%max		TO87
85	AD550SD		7	TTL	.80	2.0	15	5.0	195m	5	C	Quad Curr Sw For DAC;Acc 1.0%max		TO116
86	AD550SF		7	TTL	.80	2.0	15	5.0	195m	5	C	Quad Curr Sw For DAC;Acc 1.0%max		TO87
87	AD550TD		7	TTL	.80	2.0	15	5.0	195m	5	C	Quad Curr Sw For DAC;Acc .10%max		TO116
88	AD550TF		7	TTL	.80	2.0	15	5.0	195m	5	C	Quad Curr Sw For DAC;Acc .10%max		TO87
89	AD550UD		7	TTL	.80	2.0	15	5.0	195m	5	C	Quad Curr Sw For DAC;Acc .01%max		TO116
90	AD550UF		7	TTL	.80	2.0	15	5.0	195m	5	C	Quad Curr Sw For DAC;Acc .01%max		TO87
91	AD553JD		7	TTL	.80	2.0	15	5.0	210m	0	7	Quad Curr Sw For DAC;Acc 1.0%max	E7-5	TO116
92	AD553KD		7	TTL	.80	2.0	15	5.0	210m	0	7	Quad Curr Sw For DAC;Acc .10%max	E7-5	TO116
93	AD553LD		7	TTL	.80	2.0	15	5.0	210m	0	7	Quad Curr Sw For DAC;Acc .01%max	E7-5	TO116
94	AD553SD		7	TTL	.80	2.0	15	5.0	210m	5	C	Quad Curr Sw For DAC;Acc 1.0%max	E7-5	TO116
95	AD553SF		7	TTL	.80	2.0	15	5.0	210m	5	C	Quad Curr Sw For DAC;Acc 1.0%max	E7-5	TO87
96	AD553TD		7	TTL	.80	2.0	15	5.0	210m	5	C	Quad Curr Sw For DAC;Acc .10%max	E7-5	TO116
97	AD553TF		7	TTL	.80	2.0	15	5.0	210m	5	C	Quad Curr Sw For DAC;Acc .10%max	E7-5	TO87
98	AD553UD		7	TTL	.80	2.0	15	5.0	210m	5	C	Quad Curr Sw For DAC;Acc .01%max	E7-5	TO116
99	AD553UF		7	TTL	.80	2.0	15	5.0	210m	5	C	Quad Curr Sw For DAC;Acc .01%max	E7-5	TO87
100	AD555JD		7	TTL	.80	2.0	15	15	200m	0	7	Quad Volt Sw for DAC;On Resis 100 ohm	E7-4	TO116
101	AD555JF		7	TTL	.80	2.0	15	15	200m	0	7	Quad Volt Sw for DAC	E7-4	TO87
102	AD555KD		7	TTL	.80	2.0	15	15	200m	0	7	Quad Volt Sw for DAC	E7-4	TO116
103	AD555KF		7	TTL	.80	2.0	15	15	200m	0	7	Quad Volt Sw for DAC	E7-4	TO87
104	AD555LD		7	TTL	.80	2.0	15	15	200m	0	7	Quad Volt Sw for DAC	E7-4	TO116
105	AD555LF		7	TTL	.80	2.0	15	15	200m	0	7	Quad Volt Sw for DAC	E7-4	TO87
106	AD555SD		7	TTL	.80	2.0	15	15	200m	5	C	Quad Volt Sw for DAC	E7-4	TO116
107	AD555SF		7	TTL	.80	2.0	15	15	200m	5	C	Quad Volt Sw for DAC	E7-4	TO87
108	AD555TD		7	TTL	.80	2.0	15	15	200m	5	C	Quad Volt Sw for DAC	E7-4	TO116
109	AD555TF		7	TTL	.80	2.0	15	15	200m	5	C	Quad Volt Sw for DAC	E7-4	TO87
110	AD555UD		7	TTL	.80	2.0	15	15	200m	5	C	Quad Volt Sw for DAC	E7-4	TO116

SYMBOLS AND CODES EXPLAINED IN INTERPRETER

20. SPECIAL DEVICES

IN ORDER OF: (1)TECHN
(2)TYPE CODE & (3)TYPE NUMBER

LINE No.	3 TYPE NUMBER	DATA SHT.	2 TYPE CODE	1 TECHN	INPUT LOGIC LEVELS MAX '0' (V)	INPUT LOGIC LEVELS MIN '1' (V)	RATED PWR SUPPLY SPAN NEG (V)	RATED PWR SUPPLY SPAN POS (V)	MAX OPER POWER DISS (W)	OPER TEMP RANGE CODE -	OPER TEMP RANGE CODE +	GENERAL DESCRIPTION	DRAWINGS LOGIC OR BLOCK	DRAWINGS OUTLINE Δ=MO
1	AD555UF		7	TTL	.80	2.0	15	15	200m	5	C	Quad Volt Sw for DAC	E7-4	TO87
2	ICL7103ACDI		7	TTL	.40	2.4	15	5.0	500m	0	7	4-1/2 Digit A/D Pair w/ICL 8052 ACDD	E7-23	DL28y
3	ICL7103ACPI		7	TTL	.40	2.4	15	5.0	500m	0	7	4-1/2 Digit A/D Pair w/ICL 8052 ACPD	E7-23	DL28j
4	ICL7103CDI		7	TTL	.40	2.4	15	5.0	500m	0	7	3-1/2 Digit A/D Pair w/icl 8052 CDD	E7-23	DL28y
5	ICL7103CPI		7	TTL	.40	2.4	15	5.0	500m	0	7	3-1/2 Digit A/D Pair w/ICL 8052 CPD	E7-23	DL28j
6	ICL8052ACDDØ		7	TTL	.40	2.4	15	5.0	500m	0	7	4 1/2 Digit A/D Pair w/ICL7103ACDD		DL28j
7	ICL8052ACPDØ		7	TTL	.40	2.4	15	5.0	500m	0	7	4 1/2 Digit A/D Pair w/ICL7103ACPD		DL28y
8	ICL8052CDDØ		7	TTL	.40	2.4	15	5.0	500m	0	7	3 1/2 Digit A/D Pair w/ICL7103CDD	E7-23	DL14af
9	ICL8052CPDØ		7	TTL	.40	2.4	15	5.0	500m	0	7	3 1/2 Digit A/D Pair w/ICL7103CPD	E7-23	DL14bi
10	LF13300D		7	TTL	.80	2.0	15	15	570m	0	7	Integrating A/D Analog Building Block	E7-49	DL18af
11	NE580F		7	TTL	0.0	3.5	0.0	5.0	250m	0	7	Bar Graph Logic Ckt;3,5,6 Phone Opera	E7-35	DL22h
12	NE580N		7	TTL	0.0	3.5	0.0	5.0	250m	0	7	Bar Graph Logic Ckt;3,5,6 Phone Opera	E7-35	DL22g
13	96LS32FC		8	TTL	.80	2.0	0.0	5.0		0	7	Address Mux/Refresh Counter for 4k RA	E8-3	F24-4
14	HD1-6600-2		8	TTL	.80	2.0	0.0	12	480m	5	C	Quad Power Strobe,tr 65ns max	E8-6	DL14aw
15	HD1-6600-5		8	TTL	.80	2.0	0.0	12	480m	0	7	Quad Power Strobe,tr 65ns max	E8-6	DL14aw
16	HD1-6605-2		8	TTL	.80	2.0	0.0	12	480m	5	C	Quad Logic Strobe,tr 65ns max	E8-6	DL14aw
17	HD1-6605-5		8	TTL	.80	2.0	0.0	12	480m	0	7	Quad Logic Strobe,tr 65ns max	E8-6	DL14aw
18	1513C-16/1-01		13	TTL		11.8	0.0	15		0	7	16Bit/2 Speed Syn Dig Conv;Gear Ratio		
19	1513C-36/1-01		13	TTL		11.8	0.0	15		0	7	16Bit/2 Speed Syn Dig Conv;Gear Ratio		
20	1513C-1601		13	TTL		11.8	0.0	15	2.0	0	7	2Speed Synchro-Dig Conv;Ref400 Hz,26V		
21	1513C-160212		13	TTL		90	0.0	12	2.0	0	7	2Speed Synchro-Dig Conv;Ref400 Hz,115		
22	1513C-160312H		13	TTL		90	0.0	12	2.0	0	7	2Speed Synchro-Dig Conv;Ref50/400Hz,1		
23	1513C-160612HP		13	TTL		11.8	0.0	12	2.0	0	7	2Speed Resolv-Dig Conv;Ref 400Hz,26V		
24	1513M-16/1-01		13	TTL		11.8	0.0	15		5	A	16Bit/2 Speed Syn Dig Conv;Gear Ratio		
25	1513M-16/1-01-883		13	TTL		11.8	0.0	15		5	A	16Bit/2 Speed Syn Dig Conv;Gear Ratio		
26	1513M-36/1-01		13	TTL		11.8	0.0	15		5	A	16Bit/2 Speed Syn Dig Conv;Gear Ratio		
27	1513M-36/1-01-883		13	TTL		11.8	0.0	15		5	A	16Bit/2 Speed Syn Dig Conv;Gear Ratio		
28	1513M-160712HP833		13	TTL		11.8	0.0	12	2.0	5	A	2Speed Resolv-Dig Conv;Ref 400Hz,115V		
29	1513M-161112HP833		13	TTL		11.8	0.0	12	2.0	5	A	2 Speed Synchro Dig Conv;Ref 400Hz,11		
30	MC68A52CL		27	TTL	0.8	2.0	0.0	5.0	525m	4	8	Sync Ser. Data Adapt;Max CLK Freq 1.0	E27-6	DL24ay
31	MC68A52CP		27	TTL	0.8	2.0	0.0	5.0	525m	4	8	Sync Ser. Data Adapt;Max CLK Freq 1.0	E27-6	DL24r
32	MC6852BJCS		27	TTL	0.8	2.0	0.0	5.0	525m	5	C	Sync Ser. Data Adapt;Max CLK Freq 600	E27-6	
33	MC6852CJCS		27	TTL	0.8	2.0	0.0	5.0	525m	5	C	Sync Ser. Data Adapt;Max CLK Freq 600	E27-6	
34	N8T363N		27	TTL	1.1	2.4	0.0	5.0		0	7	Dual Zero Crossing Detector	E27-8	DL14f

SYMBOLS AND CODES
EXPLAINED IN INTERPRETER

22. LOGIC/BLOCK DRAWINGS

40-09A Converter Inverting Hex Buffer

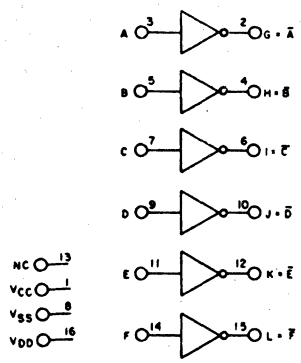

40-10B Converter Non-Inverting Hex Buffer

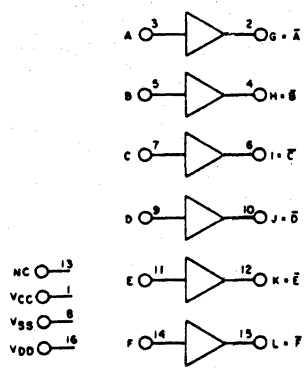

40-11B Quad 2-Input NAND Gates

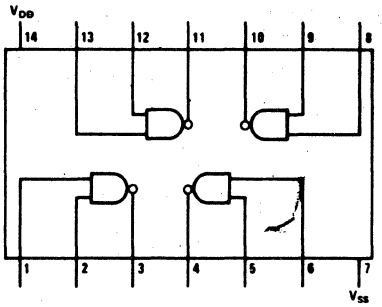

40-26B Decade Counter/Divider with 7-Segment Display Outputs and Display Enable

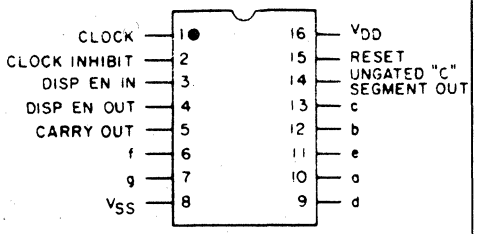

40-33B Decade Counter/Divider with 7-Segment Display Outputs and Ripple Blanking

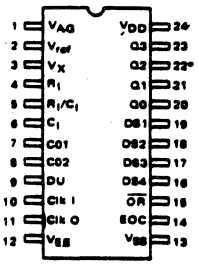

40-43B Quad NOR R/S Latch with 3 - State Outputs

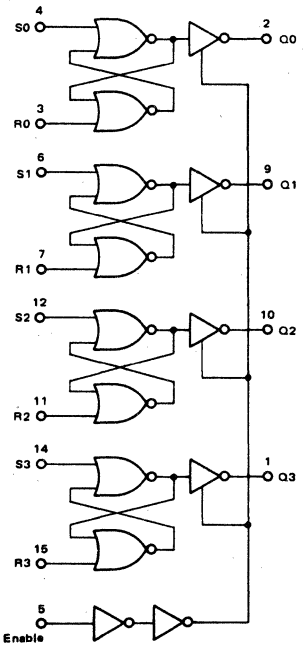

TRUTH TABLE

S	R	E	Q
X	X	0	High Impedance
0	0	1	No Change
0	1	1	0
1	0	1	1
1	1	1	1

X = Don't Care

V_{DD} = Pin 16
V_{SS} = Pin 8

40-07A Dual Complementary Pair Plus Inverter

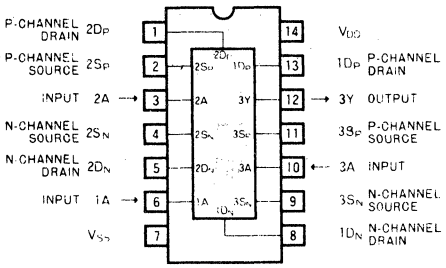

40-16B Quad Bilateral Switch

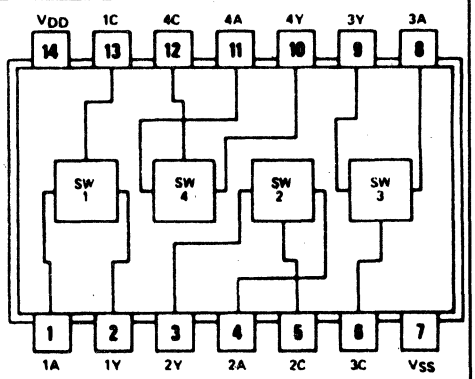

40-41A Quad True/Complement Buffer

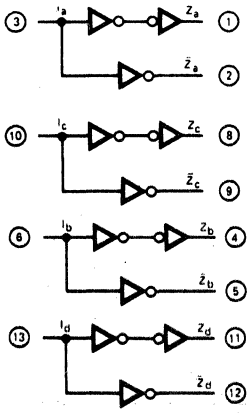

V_{DD} = Pin 14
V_{SS} = Pin 7
□ = Pin Number

40-54B 4-Segment Liquid-Crystal Display Driver

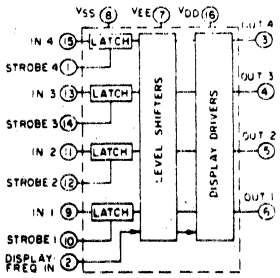

40-55B BCD-To-7-Segment Decoder/ Driver with "Display-Frequency" Output Liquid Crystal Display

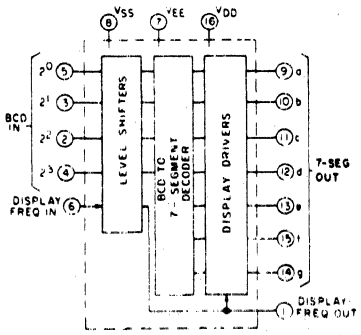

22. LOGIC/BLOCK DRAWINGS

40-56B — BCD-to-7-Segment Decoder/Driver with Strobed/Latch Function Liquid Crystal Display

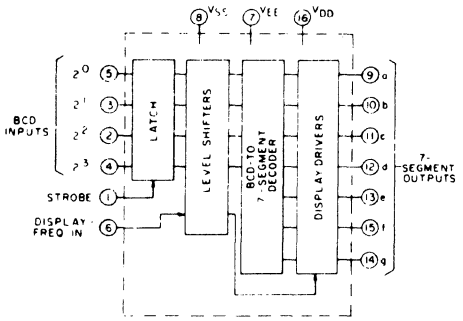

40-107B — Dual 2-Input NAND Buffer/Driver

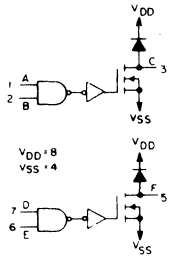

44-26A — Decade Counter/Driver with 7-Segment Display Driver (Display Enable)

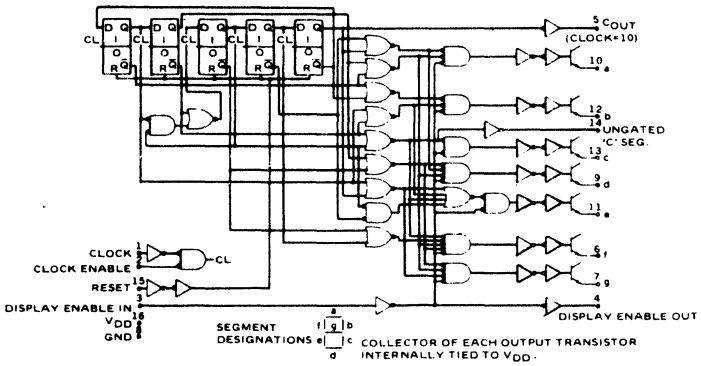

44-33A — Decade Counter/Driver with 7-Segment Display Driver (Ripple Blanking)

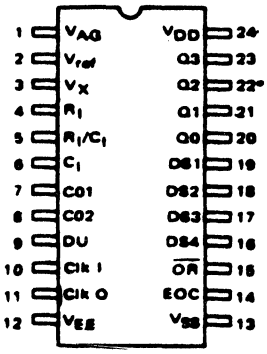

44-41U — Quad Low Impendance Buffers

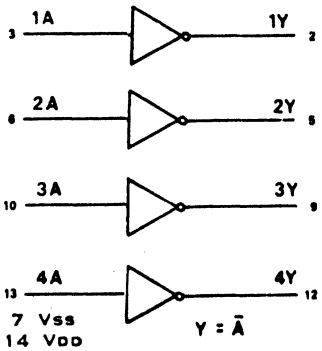

45-02B — Strobed Hex Inverter/Buffer with 3-State Outputs

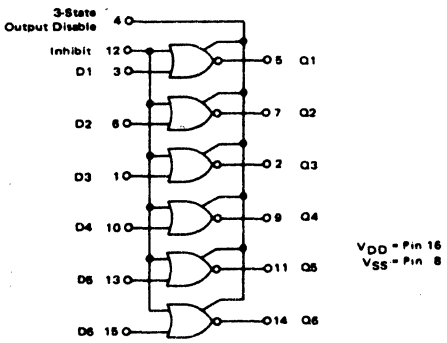

45-11B — BCD-to-7-Segment Latch/Decoder/Driver

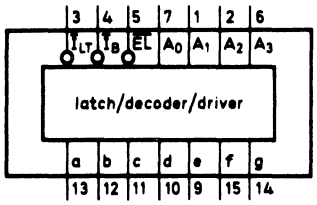

45-32B — 8-Bit Priority Encoder

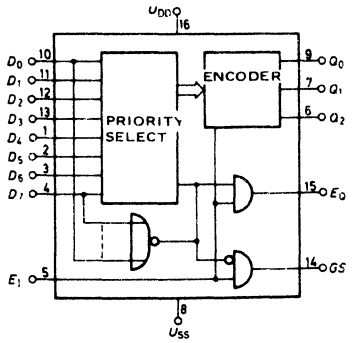

45-43B — BCD-To-7-Segment Latch/Decoder/Driver for Liquid Crystal Displays

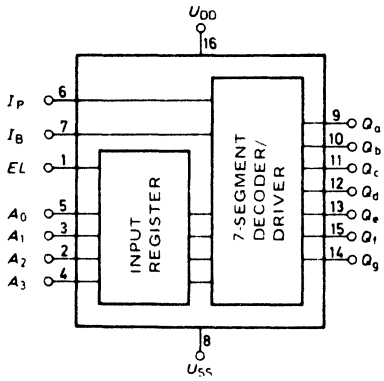

45-83B — Dual Schmitt Trigger

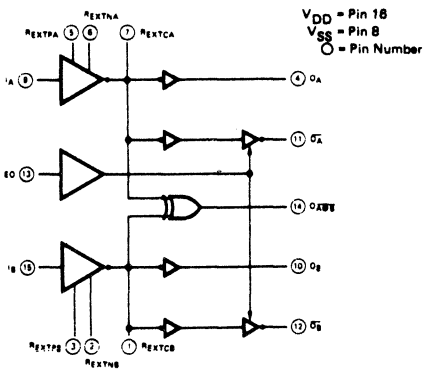

22. LOGIC/BLOCK DRAWINGS

54S00W Quad 2-Input NAND Gates

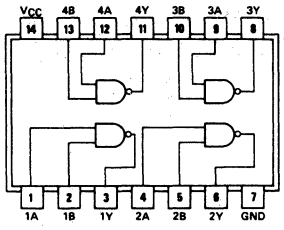

54LS01W Quad 2-Input NAND Gates with Open-Collector Outputs

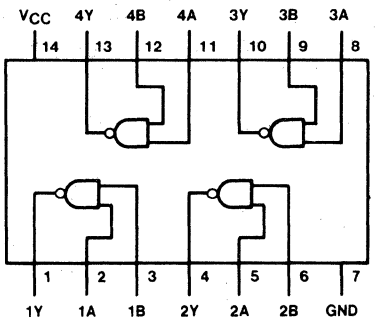

54S02W Quad 2-Input NOR Gates

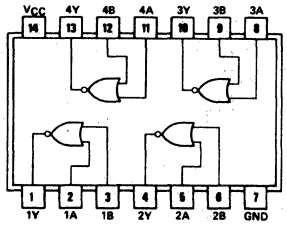

54S03W Quad 2-Input NAND Gates with Open-Collector Outputs

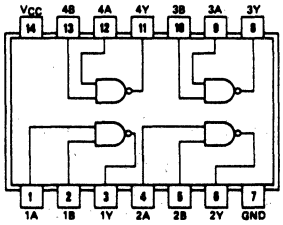

54-04W Hex Inverter

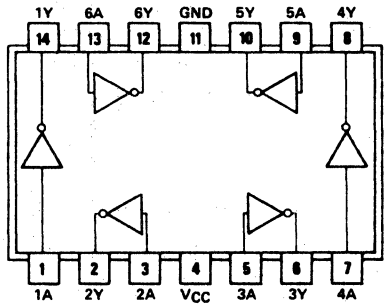

54S04W Hex Inverter

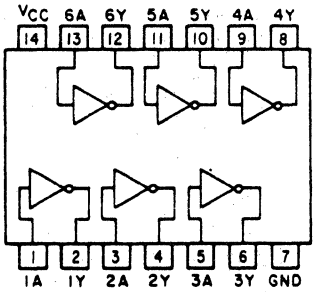

54-05W Hex Inverter with Open-Collector Outputs

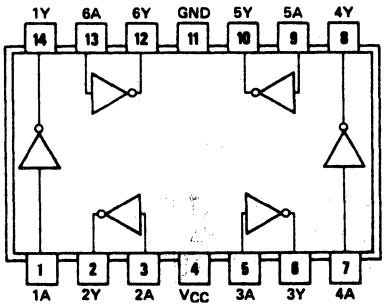

54S05W Hex Inverter with Open-Collector Outputs

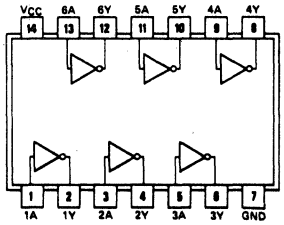

54-13W Dual 4-Input NAND Schmitt Trigger

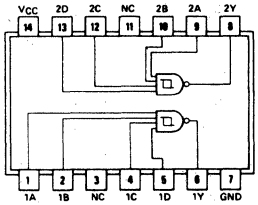

54-33W Quad 2-Input NOR Buffer with-Open Collector Outputs

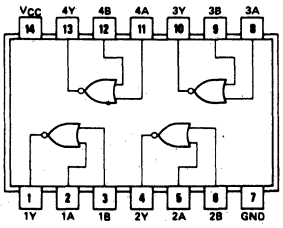

54-40W Dual 4-Input NAND Buffers

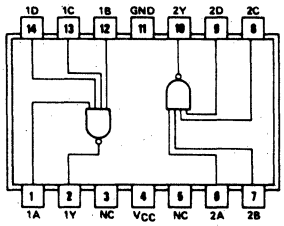

54-41W BCD-to-Decimal Decoder/ Nixie Driver

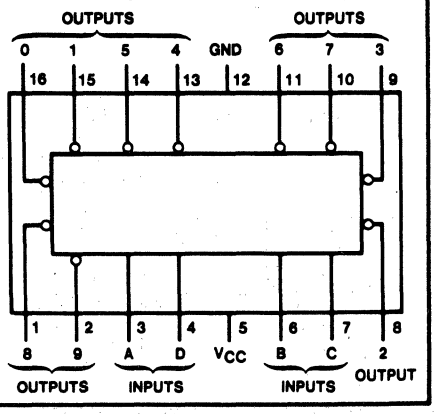

22. LOGIC/BLOCK DRAWINGS

54-48W

BCD-to Seven-Segment Decoder/Driver

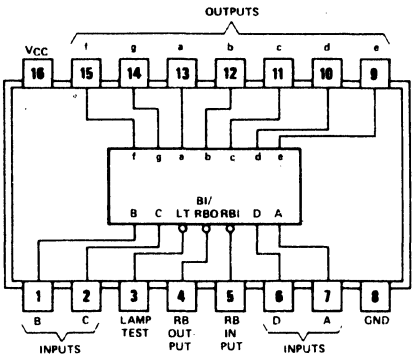

54LS49W

BCD-to-Seven-Segment Decoder/Driver with Open-Collector Outputs

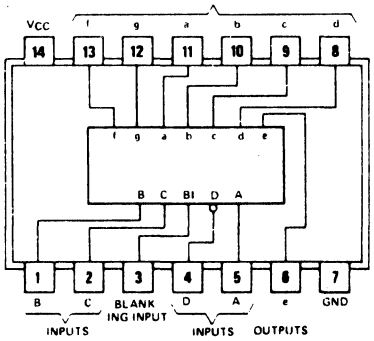

54-125W

Quad Bus Buffer with 3-State Outputs

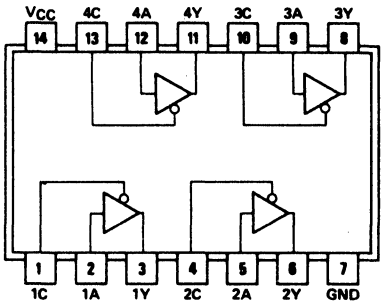

54-126W

Quad Bus Buffer with 3-State Outputs

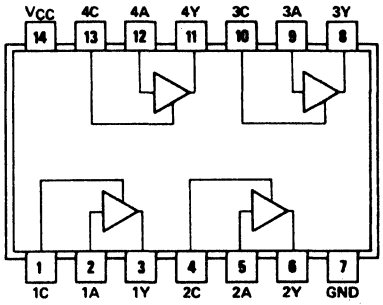

54-147W

10-Line Decimal to 4-Line BCD Priority Encoder

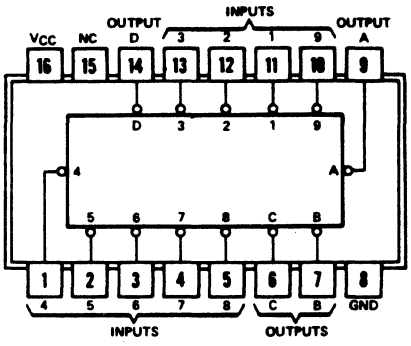

54-148W

8-Line to 3-Line Octal Priority Encoder

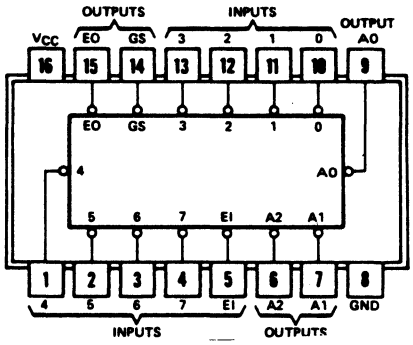

54-152W

1-of-8 Data Selector/Multiplexer

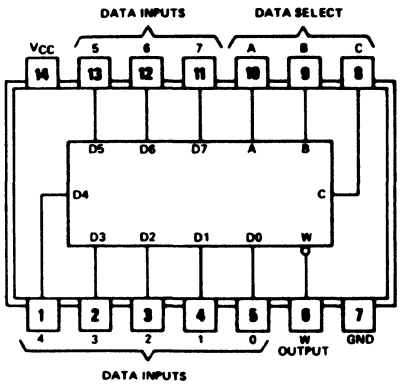

54LS240W

Octal Buffer Line Driver/Line Receiver with Inverting 3-State Outputs

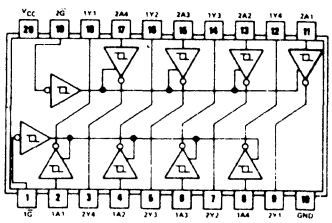

54LS241W

Octal Buffer/Line Driver/Line Receiver with Non-Inverting 3-State Outputs

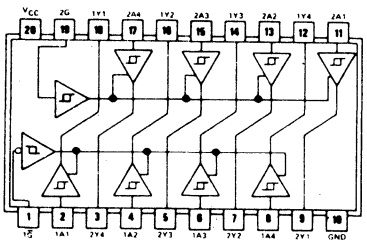

54LS244W

Octal Buffer/Line Driver/ Line Receiver with Non-Inverting 3-State Outputs

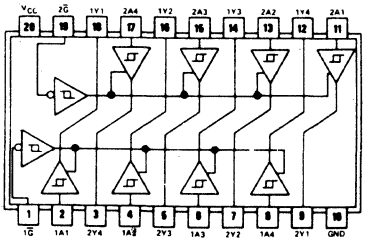

54-246W

BCD-to-Seven-Segment Decoder/ Driver with Open-Collector Outputs (Active Low)

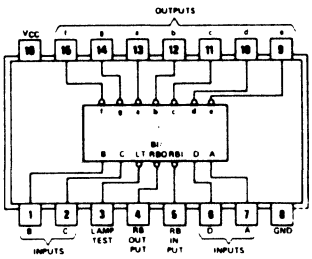

54-248W

BCD - To - Seven - Segment Decoder/Driver

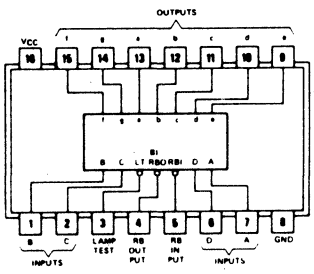

22. LOGIC/BLOCK DRAWINGS

54-365W Hex Bus Driver with Non-Inverted 3-State Outputs

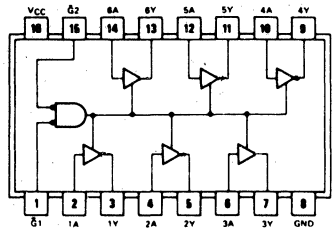

54-366W Hex Bus Driver with Inverted 3-State Outputs

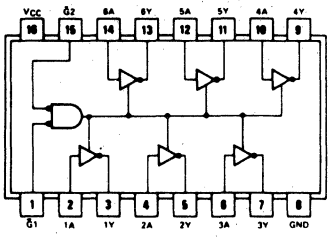

54-367W Hex Bus Driver with Non-Inverted 3-State Outputs

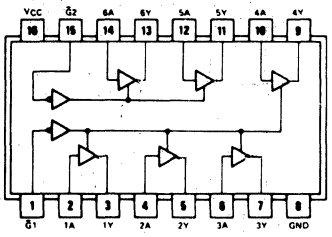

54-368W Hex Bus Driver with Inverted 3-State Outputs

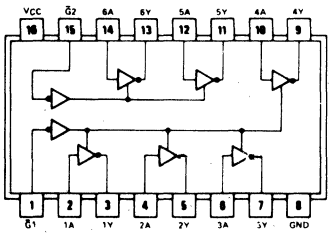

54-00W Quad 2-Input NAND Gate

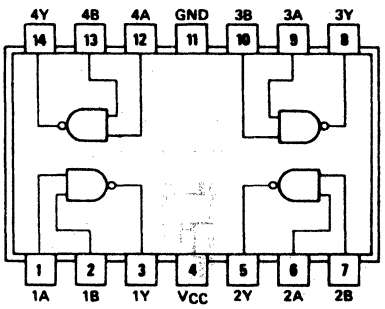

54LS540W Octal Buffer/Line Driver with Inverted 3-State Outputs

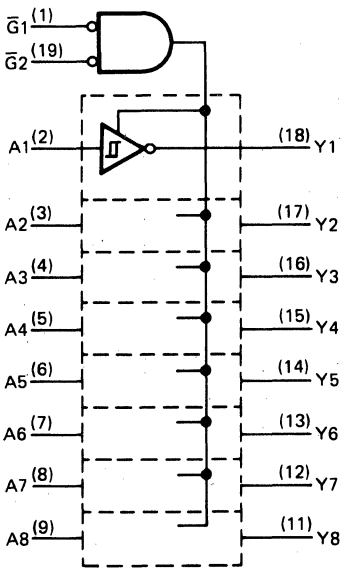

54LS541W Octal Buffer/Line Driver with Non-Inverted 3-State Outputs

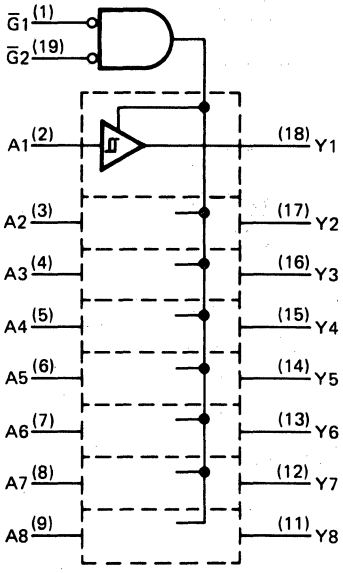

54-07W Hex Buffer/Driver with Open-Collector High-Voltage Outputs

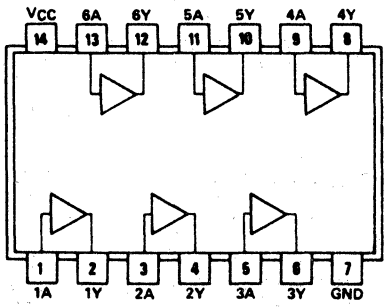

54-45W BCD-To-Decimal Decoder/Driver

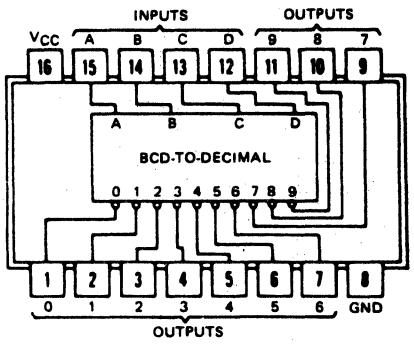

54-46W BCD-To-7-Segment Decoder/Driver with Open-Collector Outputs (Active Low)

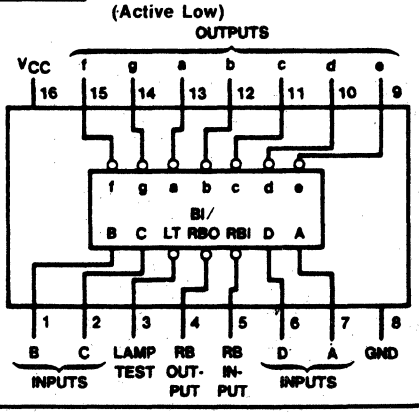

22. LOGIC/BLOCK DRAWINGS

54LS137W 3-Line To 8-Line Decoder/ Demultiplexer with Address Latches

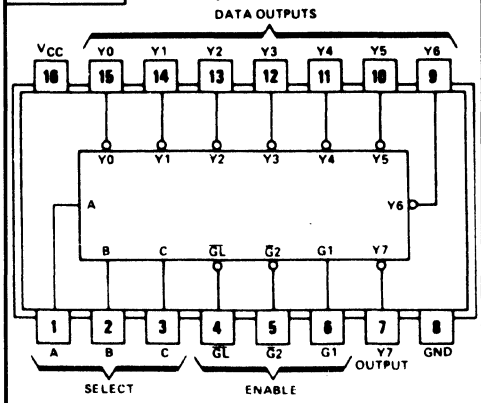

54S138W 3-To-8-Line Decoder/Demultiplexer

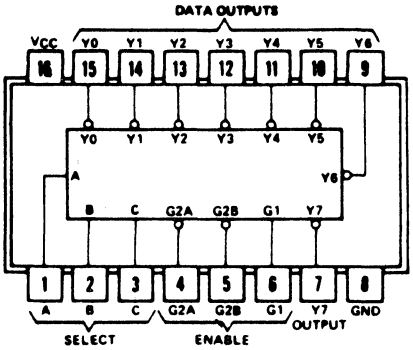

54S139W Dual 2-To-4-Line Decoder/ Demultiplexer

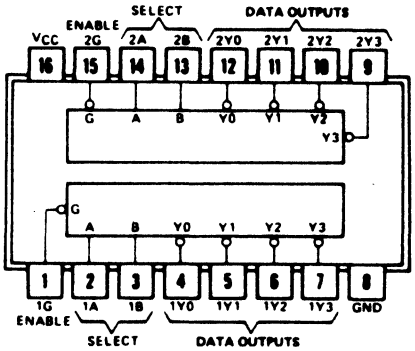

54-150W 1-of-16 Data Selector/Multiplexer

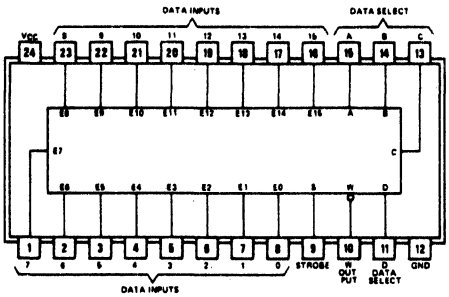

54-151W 1-of-8 Data Selector/Multiplexer

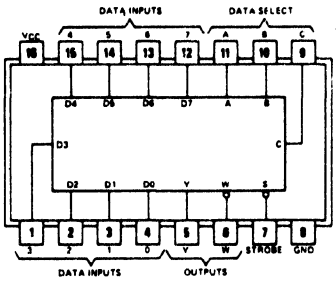

54-153W Dual 4-Line to 1-Line Data Selector/Multiplexer

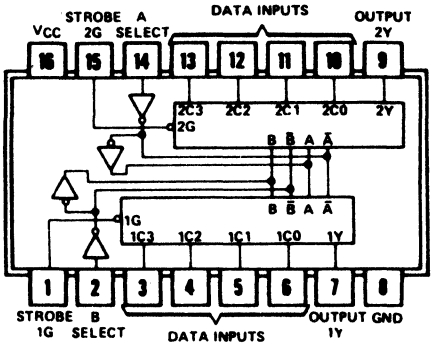

54-154W 4-Line to 16-Line Decoder/ Demultiplexer

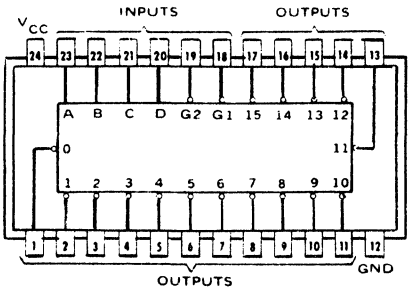

54-155W Decoder/Demultiplexer with Totem-Pole Outputs

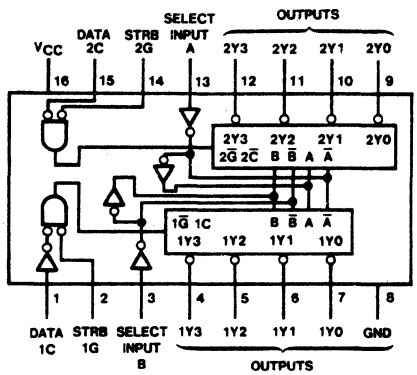

54-156W Decoder/Demultiplexer with Open-Collector Outputs

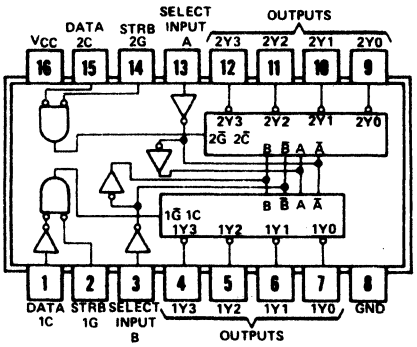

54-157W Quad 2-to-1-Line Data Selector/ Multiplexer with Non-Inverted Data Outputs

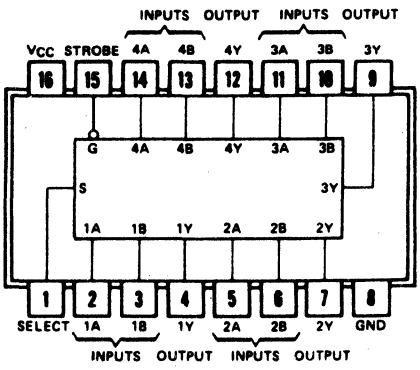

54LS242W Quad Bus Transceiver with Inverting 3-State Outputs

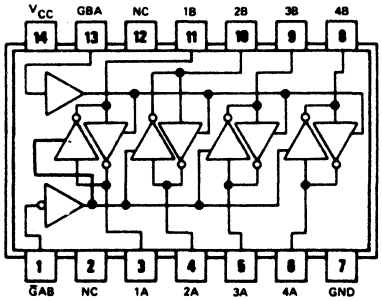

54LS245W Octal Bus Transceiver with Non-Inverting 3-State Outputs

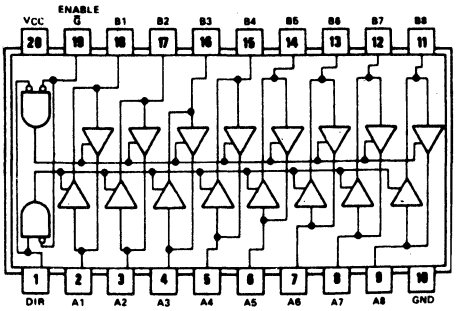

22. LOGIC/BLOCK DRAWINGS

54-251W Data Selector/Multiplexer with 3-State Outputs

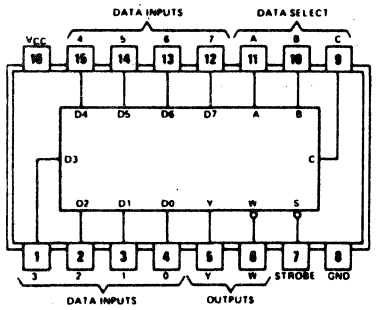

54LS253W Dual Data Selector/Multiplexer with 3-State Outputs

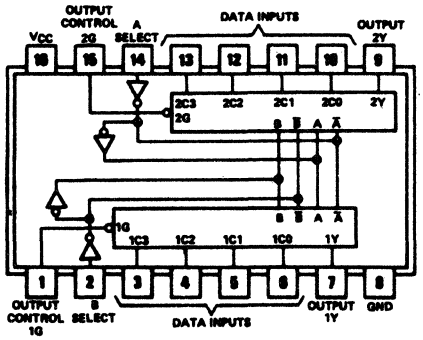

54S257W Quad Data Selector/Multiplexer with Non-Inverting 3-State Outputs

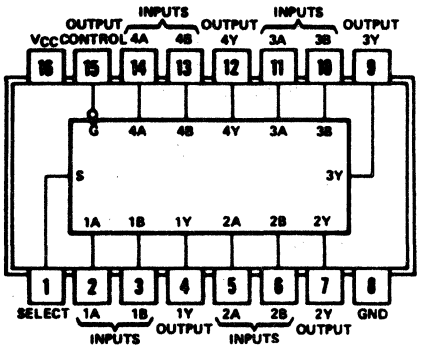

54S258W Quad Data Selector/Multiplexer with Inverting 3-State Outputs

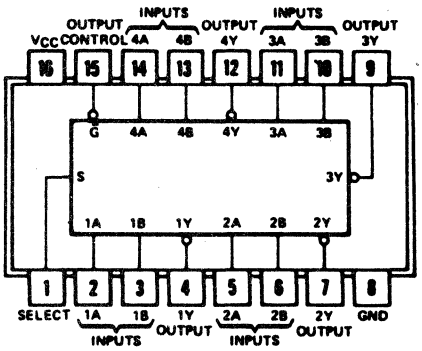

54-298W Quad 2-Input Multiplexer with Storage

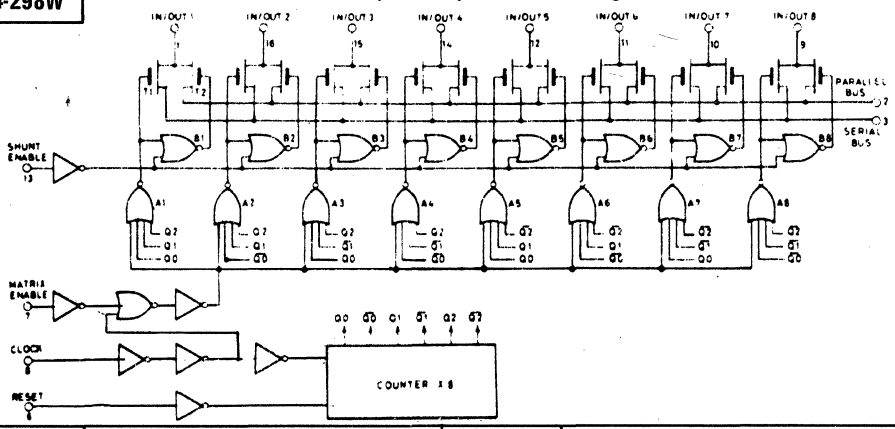

54LS352W Dual 4-Line To 1-Line Data Selector/Multiplexer (Inverting Version)

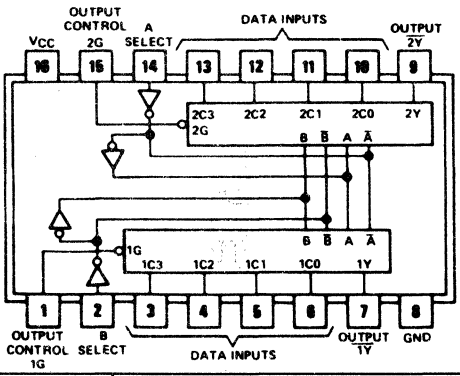

54LS399W Quad 2-Input Multiplexer with Storage (Single Rail Outputs)

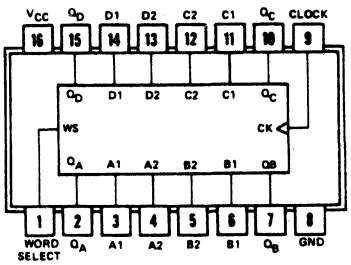

22. LOGIC/BLOCK DRAWINGS

74-00N Quad 2-Input NAND Gates

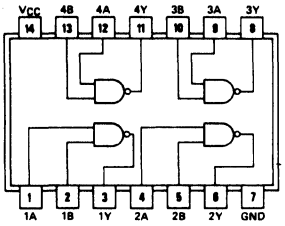

74-01N Quad 2-Input NAND Gates with Open-Collector Outputs

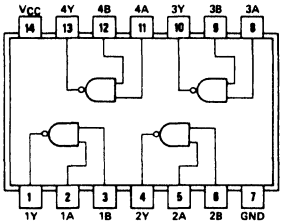

74-02N Quad 2-Input NOR Gates

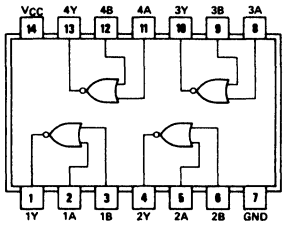

74-03N Quad 2-Input NAND Gates with Open Collector Outputs

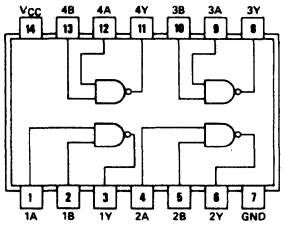

74-04N Hex Inverter

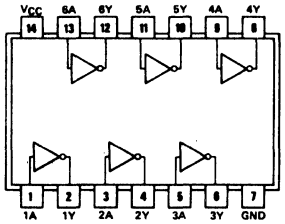

74-05N Hex Inverter with Open-Collector Outputs

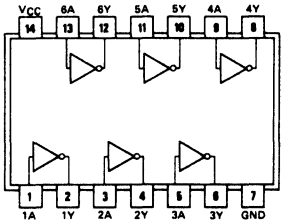

74-07N Hex Buffer/Driver with Open-Collector High Voltage Outputs

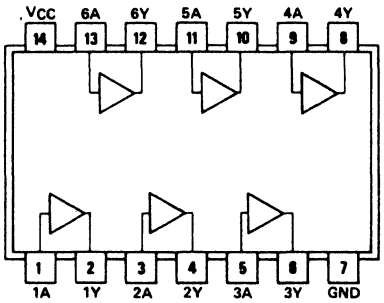

74-09N Quad 2-Input AND Gates with Open Collector Outputs

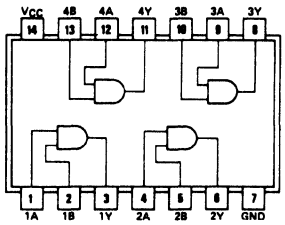

74-13N Dual 4-Input NAND Schmitt Trigger

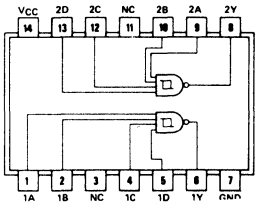

74-33N Quad 2-Input NOR Buffer with Open-Collector Outputs

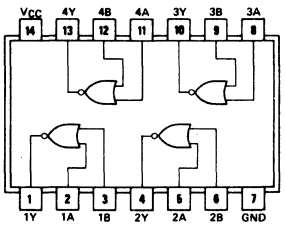

74-41N BCD-to-Decimal Decoder/Nixie Driver

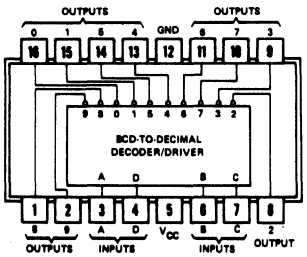

74-45N BCD to Decimal Decoder/Driver

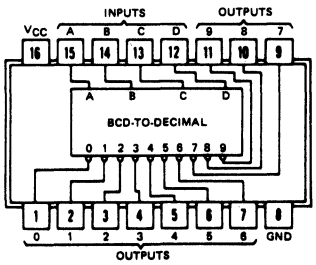

22. LOGIC/BLOCK DRAWINGS

74-46N BCD to 7 Segment Decoder/Driver with Open-Collector Outputs

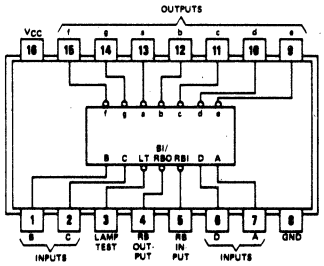

74-48N BCD-to-Seven Segment Decoder/Driver

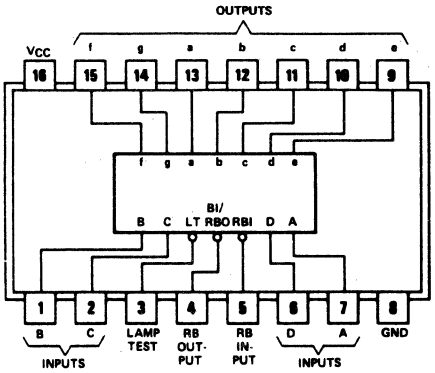

74LS49N BCD-To-Seven Segment Decoder/Driver with Open-Collector Outputs

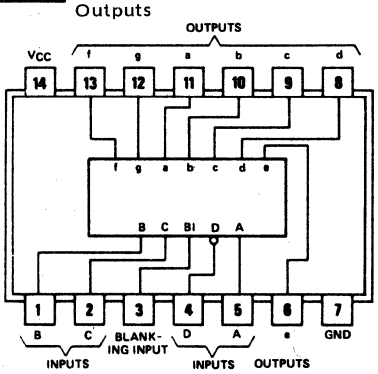

74-125N Quad Bus Buffer with 3-State Outputs

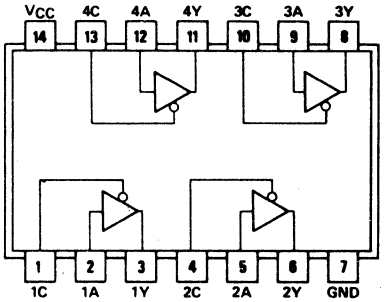

74-126N Quad Bus Buffer with 3-State Outputs

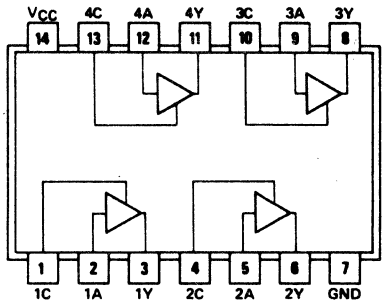

74S138N 3 - To - 8 Line Decoder/ Multiplexer

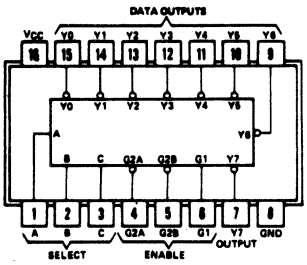

74S139N Dual 2 - To - 4 Line Decoder/ Multiplexer

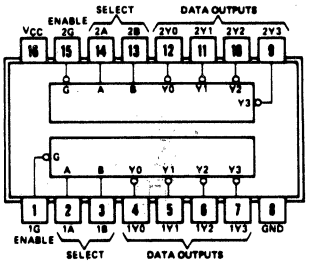

74-148N 8 -Line -To - 3 - Line Octal Priority Encoder

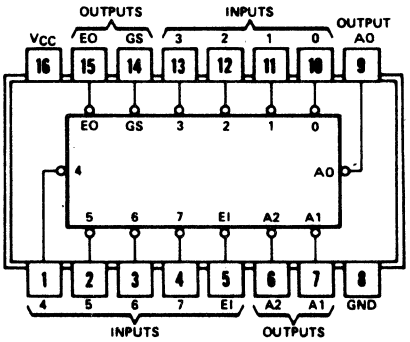

74-150N 1 - of - 16 Data Selector/Multiplexer

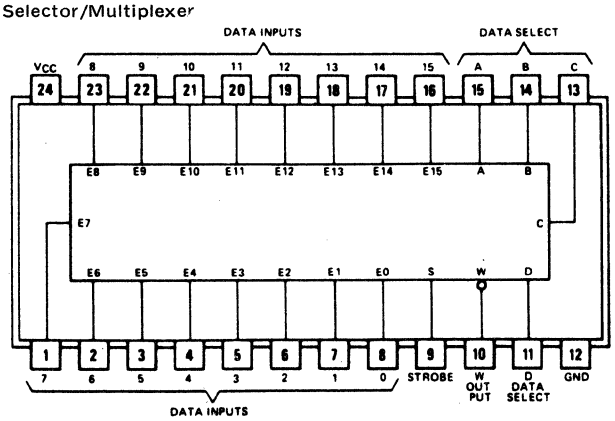

74-151N 1 - of - 8 Data Selector/Multiplexer

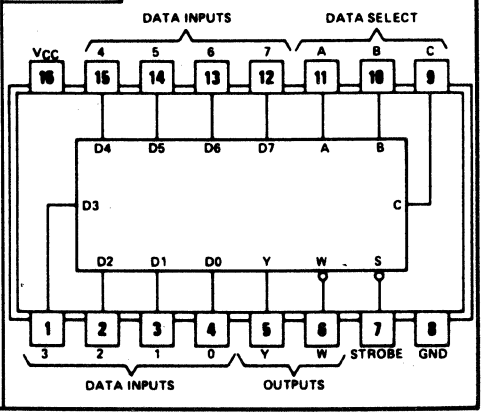

22. LOGIC/BLOCK DRAWINGS

74-152B 1 - of - 8 Data Selector/Multiplexer

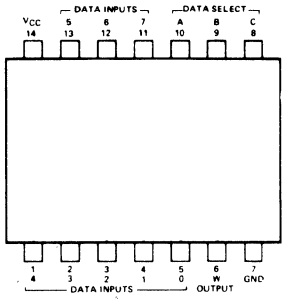

74-153N Dual 4-Line to 1-Line Data Selector/Multiplexer

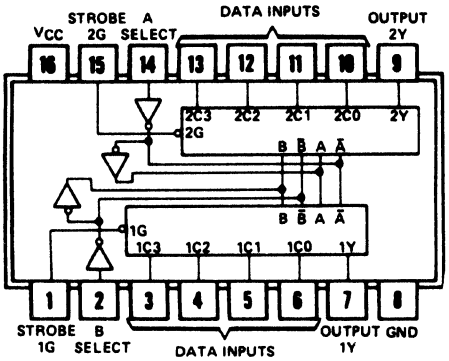

74-154N 4- Line to 16 Line Decoder/Demultiplexer

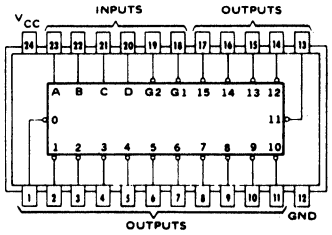

74-155N Decoder/Demultiplexer with Totem-Pole Outputs

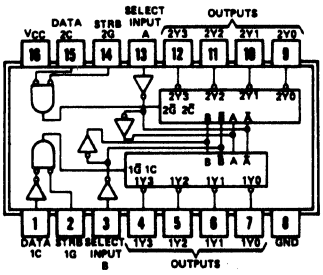

74-156N Decoder/Demultiplexer with Open-Collector Outputs

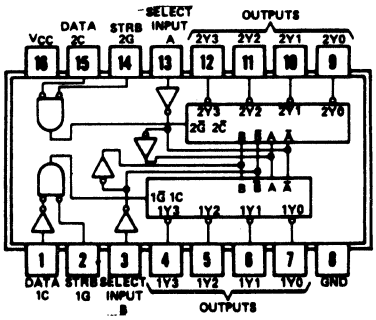

74-157N Quad 2 - to - 1 - Line Data Selector/Multiplexer with Non-Inverting Outputs

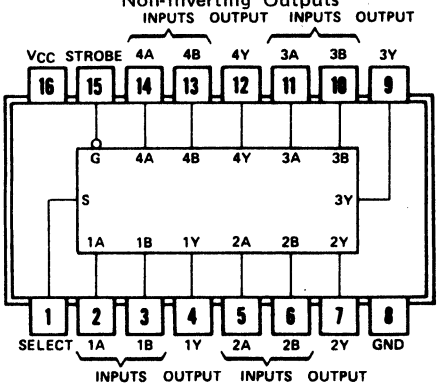

74S158N Quad 2-to 1-Line Data Selector/ Multiplexers with Inverted Data Outputs

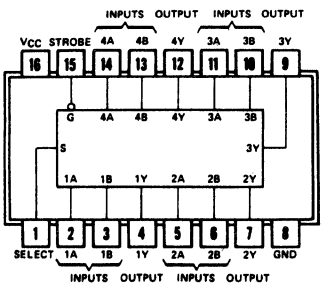

74-159N 4-to-16-Line Decoder/ Demultiplexer with Open-Collector Outputs

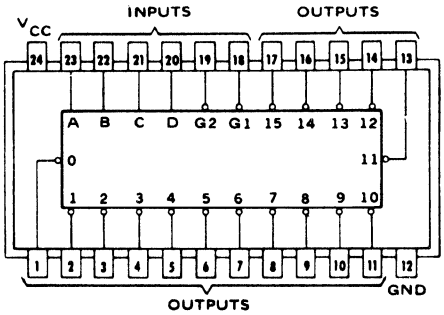

74S240N Octal Buffer/Line Driver/Line Receiver with Inverted 3-State Outputs

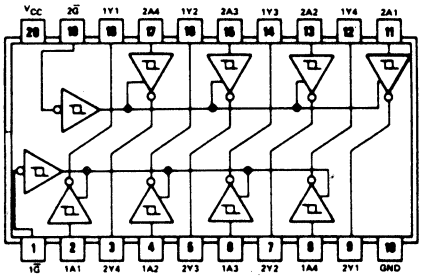

74S241N Qual Buffer /Line Driver / Line Receiver with 3- State Outputs

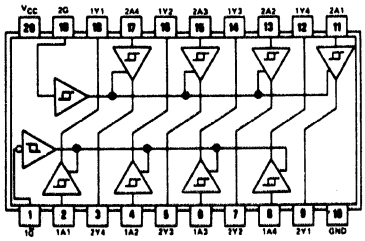

74LS242N Quad Bus Transceiver with Inverted 3-State Outputs

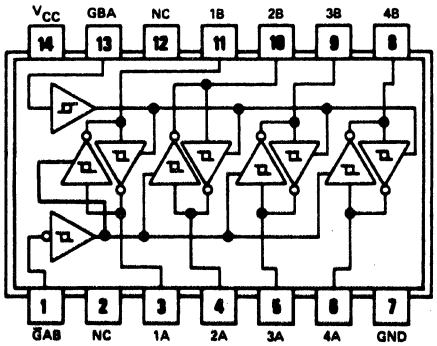

74LS245N Octal Bus Transceiver with Non-Inverted 3-State Outputs

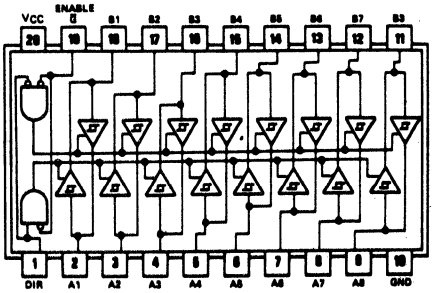

22. LOGIC/BLOCK DRAWINGS

74-251N Data Selector/Multiplexer with 3-State Outputs

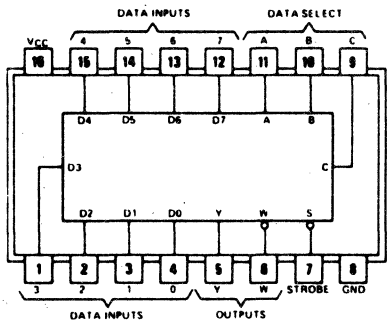

74LS253N Dual Data Selector/Multiplexer with 3-State Outputs

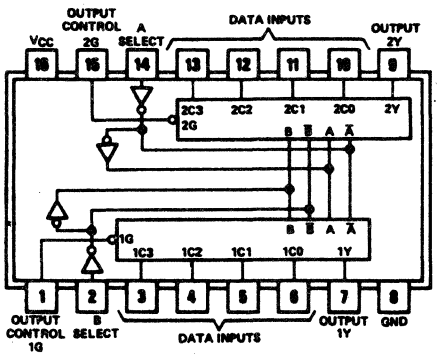

74S257N Quad Data Selector/Multiplexer with Non-inverted 3-State Outputs

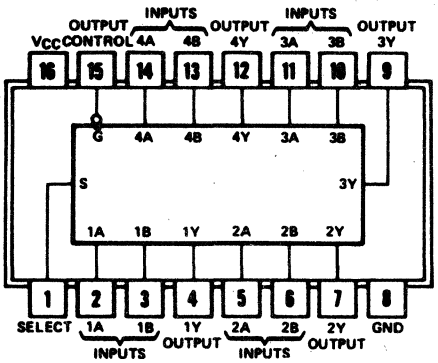

74S258N Quad Data Selecter/Multiplexer with inverted 3-State Outputs

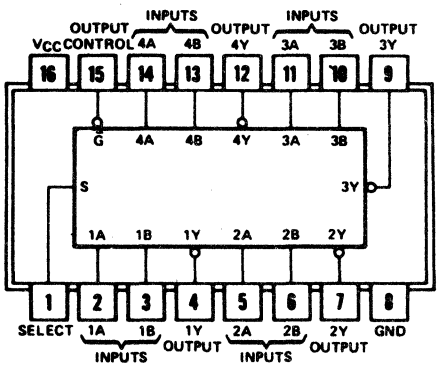

74-298N Quad 2-Input Multiplexer with Storage

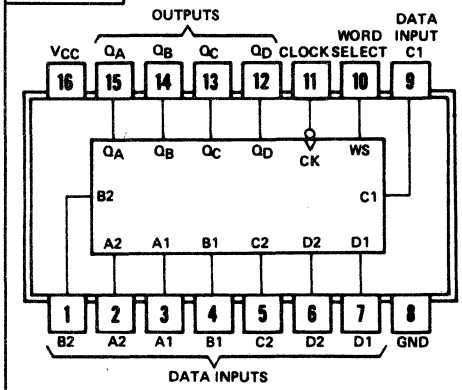

74LS352N Dual 4-Line to 1-Line Data Selecter/Multiplexer (Inverted Version)

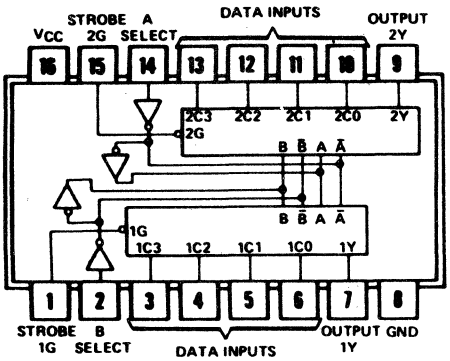

74LS353N Dual 4-Line-to-1-Line Data Selector/Multiplexer (Inverting Version)

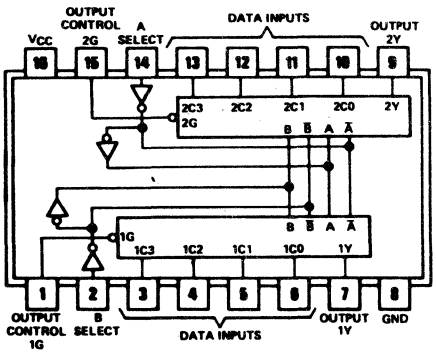

74-365N Hex Bus Driver with Non-Inverted 3-State Outputs

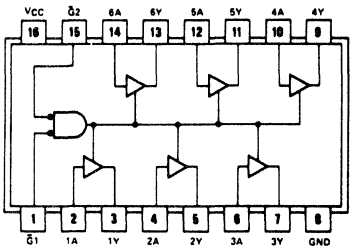

74-366N Hex Bus Driver with Inverted 3-State Outputs

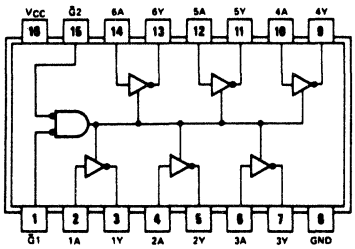

74-367N Hex Bus Driver with Non-Inverted 3-State Outputs

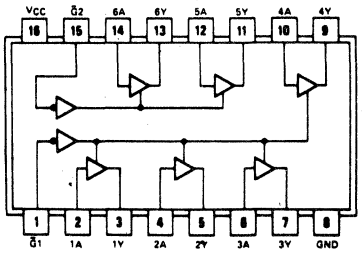

74-368N Hex Bus Driver with Inverted 3-State Outputs

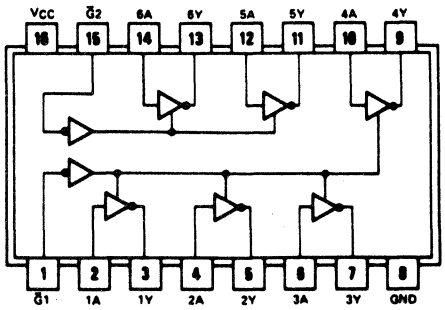

74LS398N Quad 2-Input Multiplexer with Storage and Double-Rail Outputs

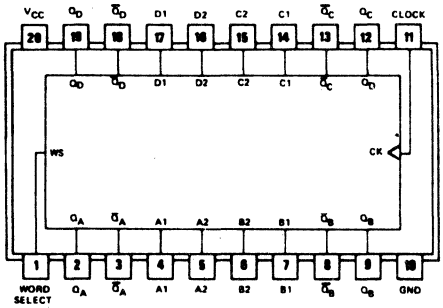

22. LOGIC/BLOCK DRAWINGS

74LS399N Quad 2-Input Multiplexer with Storage and Single—Rail Outputs

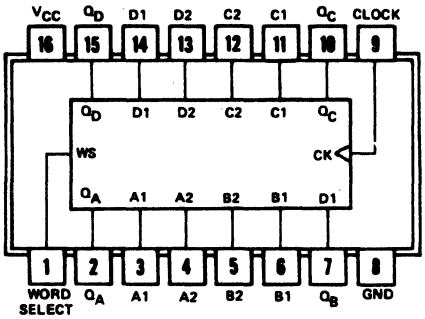

74-468P Octal Buffer with Inverting 3-State Outputs

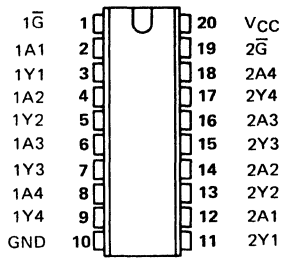

74LS540N Octal Buffer/Line Driver with Inverted 3-State Outputs

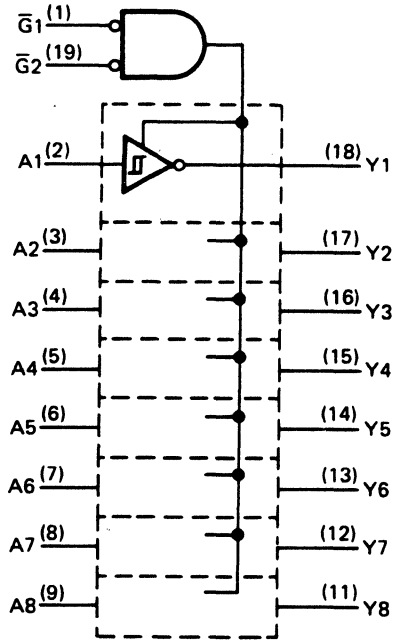

74LS541 Octal Buffers/Line Drivers with Non-Inverted 3-State Outputs

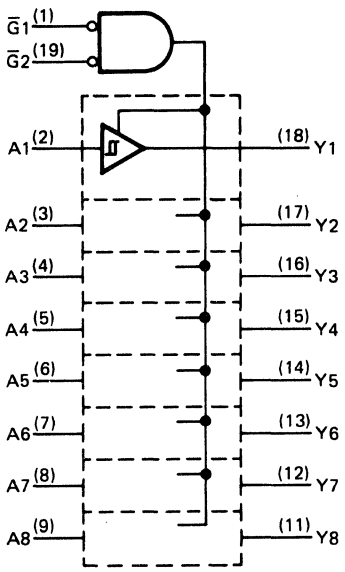

74F545P Octal Bidirectional Transceiver

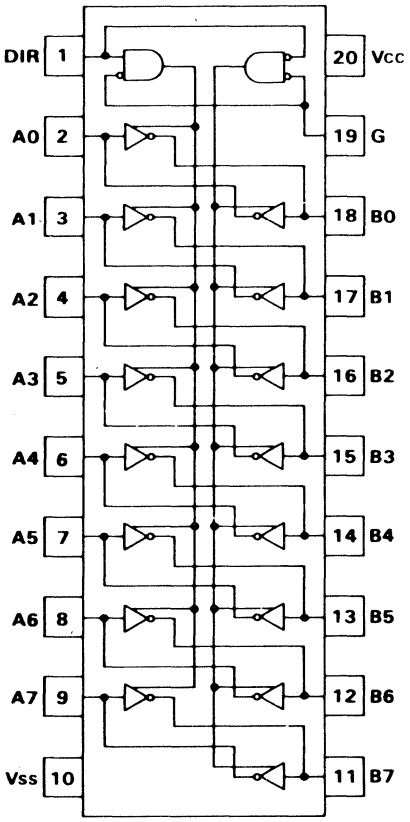

74LS620 Octal Bus Transceiver with Inverting 3-State Outputs

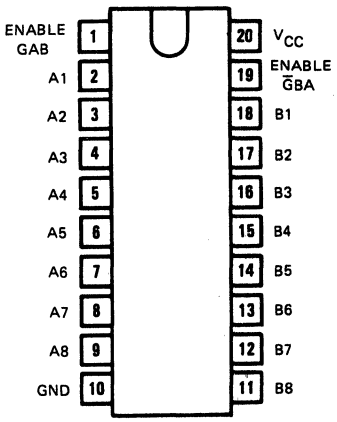

74LS642 Octal Bus Transceiver with Inverting Open-Collector Outputs

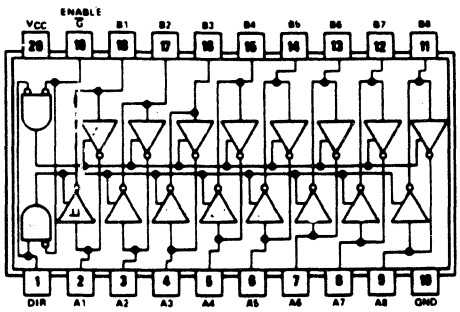

74-42N 4-Line-To-10-Line Decoder (BCD to Decimal)

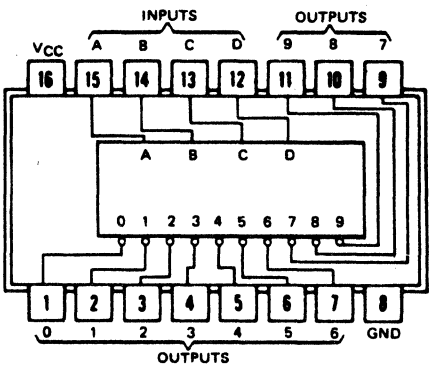

22. LOGIC/BLOCK DRAWINGS

74S135N Quad Exclusive OR/NOR Gate

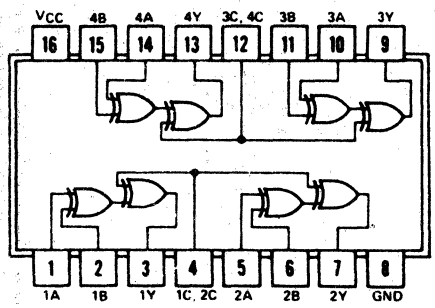

74LS137N 3-Line-To-8-Line Decoder/Demultiplexer with Input Latches

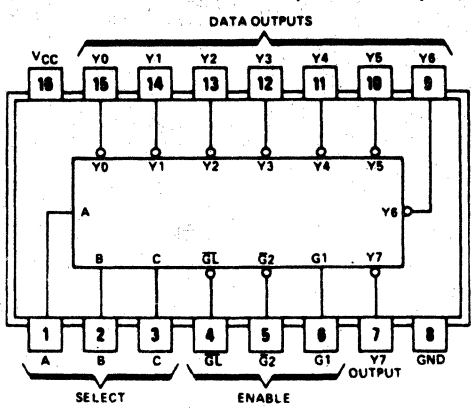

74LS273N 3-Line to 8-Line Decoder/ Demultiplexer

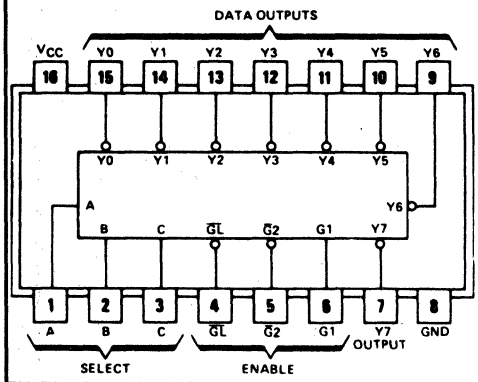

74S238N 3 to 8-Line Decoder/ Demultiplelxer

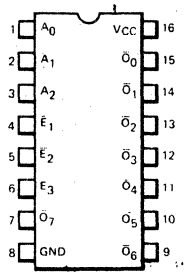

74S239N Dual 2-to-4-Line Decoder/ Demultiplexer

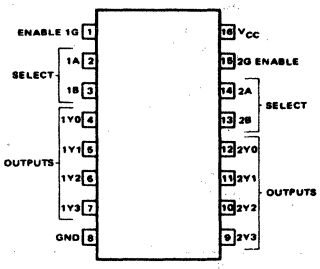

74LS243N Quad Bus Transceiver with Non-Inverting 3-State Outputs

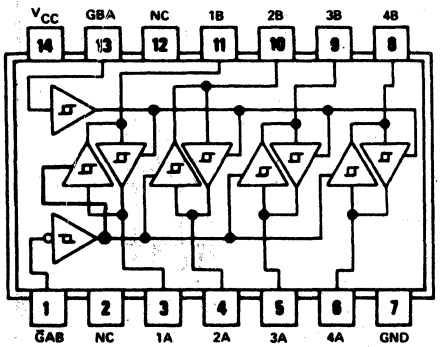

74LS244N Octal Buffer/Line Driver/ Line Receiver with Non-Inverting 3-State Outputs

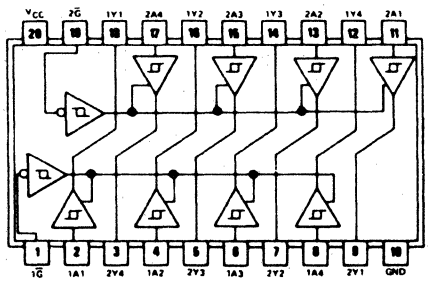

74–248N BCD-To-7-Segment Decoder/Driver

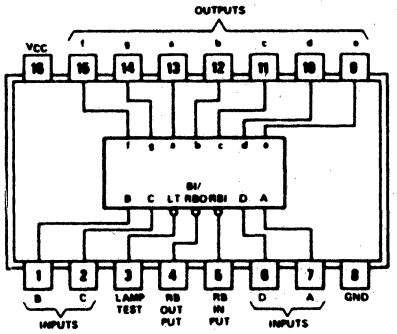

74-251W Data Selector/Multiplexer with True and Inverted 3-State Outputs

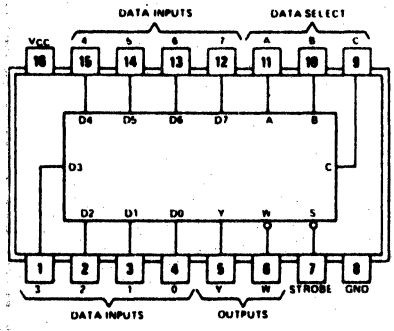

74LS266N Quad 2-Input NOR Gate with Open-Collector Outputs

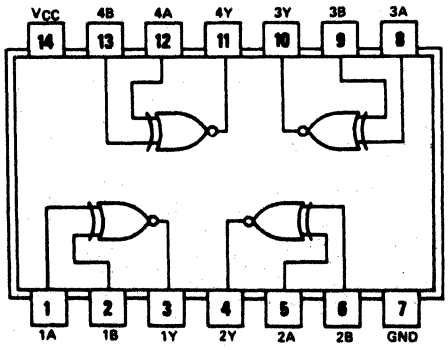

74LS645 Octal Bus Transceiver with True 3-State Outputs

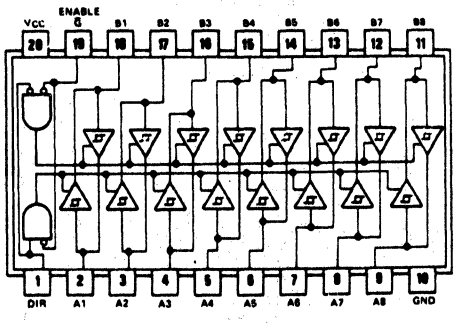

22. LOGIC/BLOCK DRAWINGS

75-22 Dual 2-Input Strobed Line Receiver with Gated Outputs

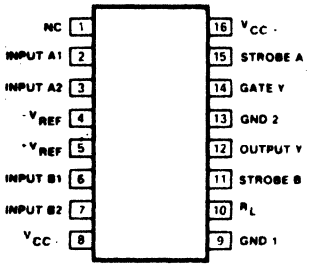

75-34 Dual 2-Input Strobed Line Receiver with Separate Inverted Outputs

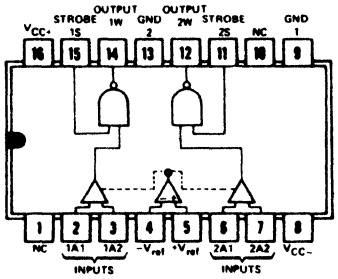

75-38 Dual 2-Input Strobed Line Receiver with Separate Open Collector Outputs

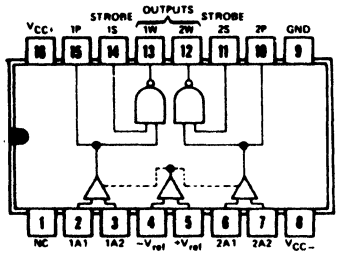

75-107 Dual Input Line Receiver with Totem Pole

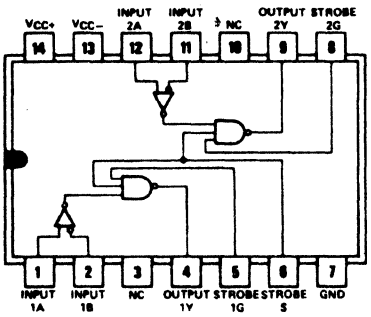

75-108 Dual Input Line Receiver with Open Collector Outputs

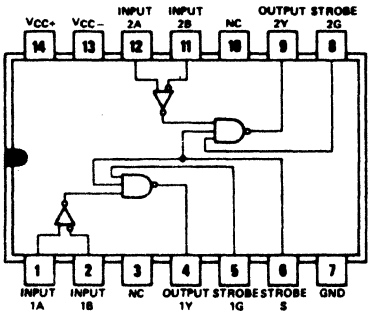

75-109 Dual 2-Input AND Line Driver

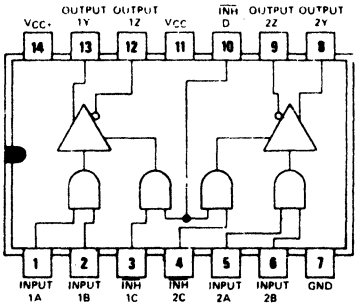

75-122N Triple Line Receiver

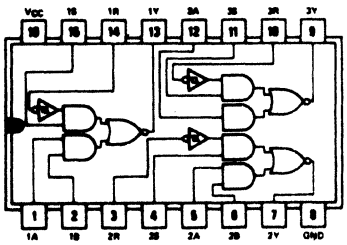

75-150 Dual Line Receiver

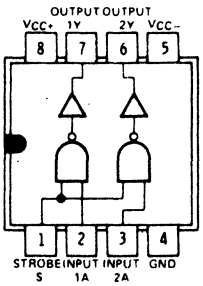

75-154 Quad Line Receiver

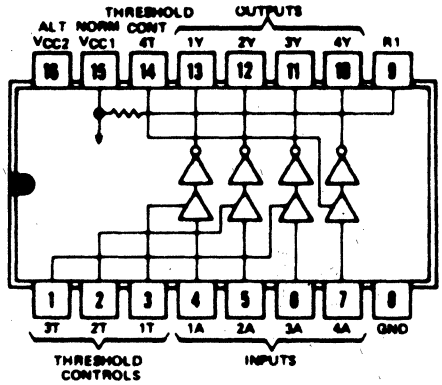

75-182N Dual Differential Line Receiver

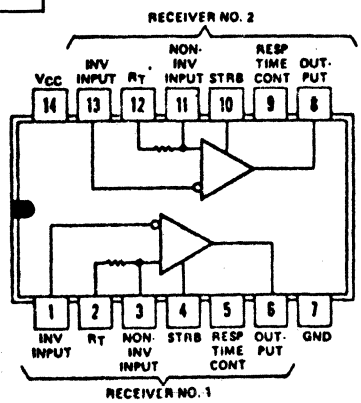

75-189 Quad Line Receiver

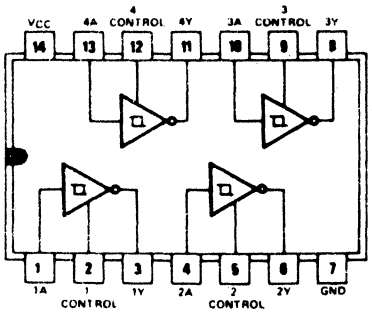

75-430N Dual Positive AND Input Driver

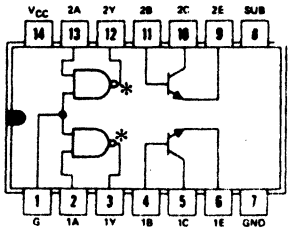

22. LOGIC/BLOCK DRAWINGS

75-431P Dual Positive NAND Input Driver

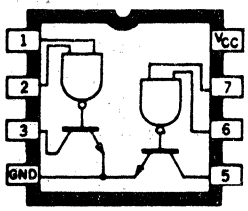

75-433P Dual Positive OR Input Driver

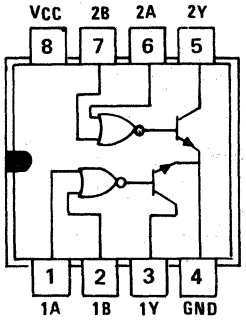

75-491N Quad MOS Input Driver

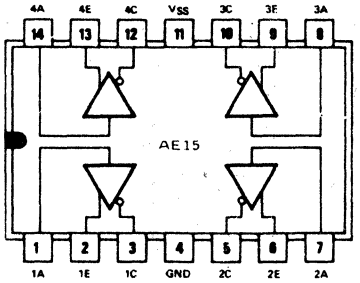

75-492N Hex MOS Input Driver

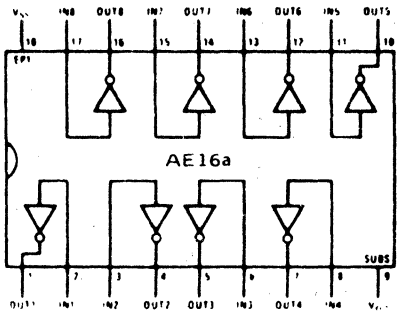

22. LOGIC/BLOCK DRAWINGS

AA1

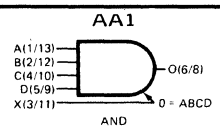

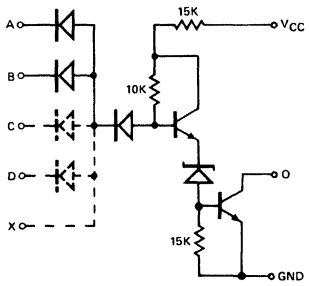

AA7

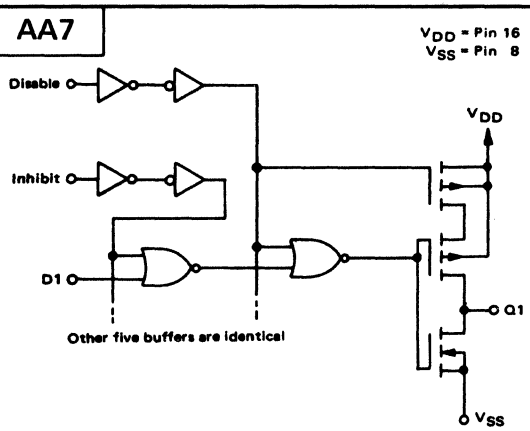

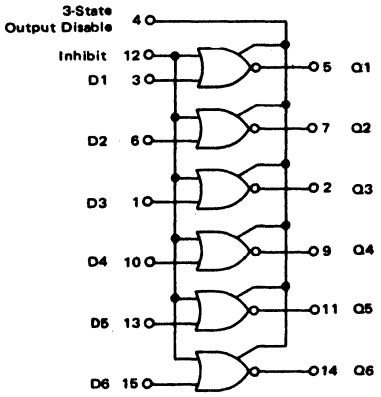

AA9

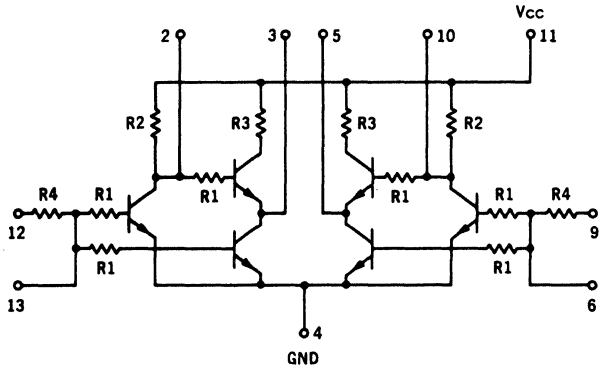

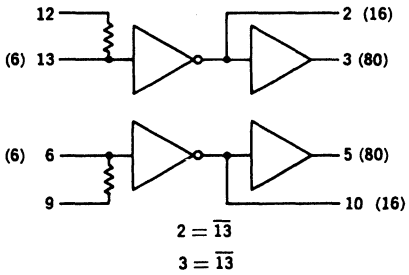

AA12

AA12a is non inverting

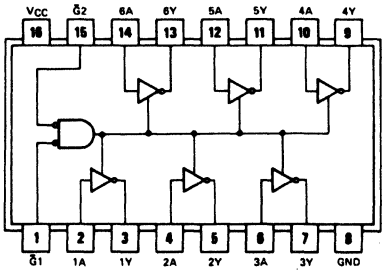

AA14

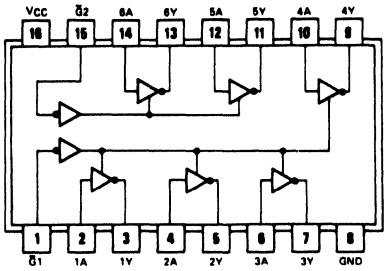

AA15

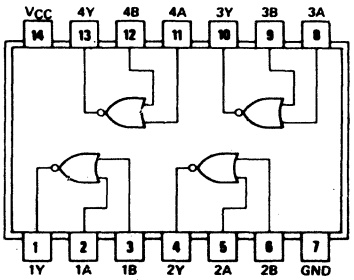

	1A	1B	1Y	2A	2B	2Y	3A	3B	3Y	4A	4B	4Y	+V	−V
AA15b	1	2	4	6	7	8	10	11	12	14	15	13	9	16
AA15a	4	5	3	9	7	2	10	9	14	12	11	13	8	1

22. LOGIC/BLOCK DRAWINGS

AA17

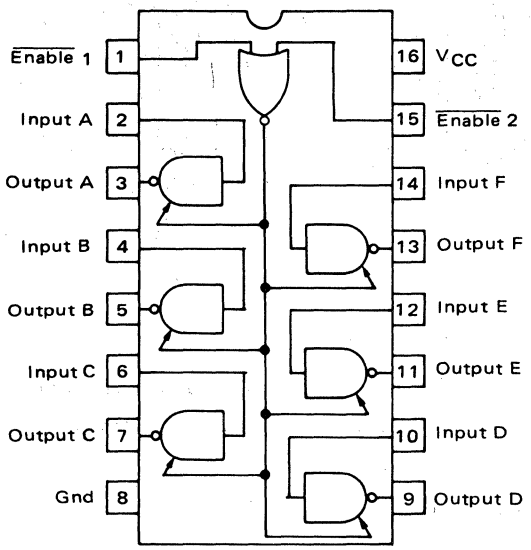

AA19

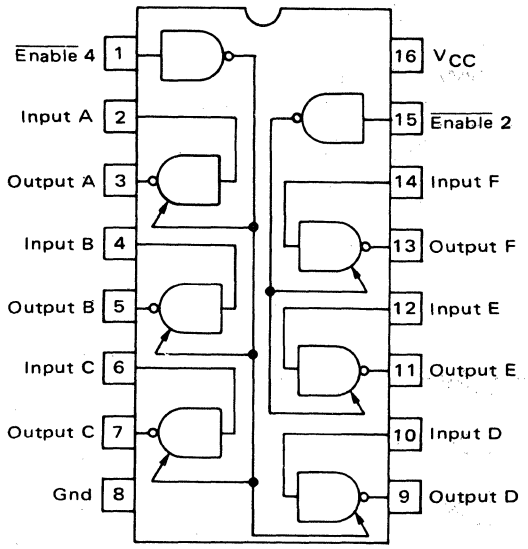

AA31

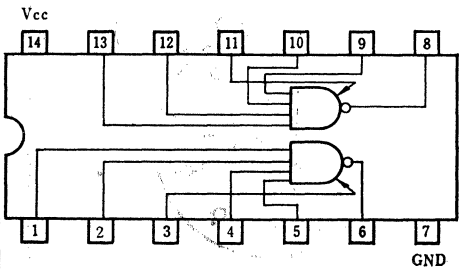

AA32

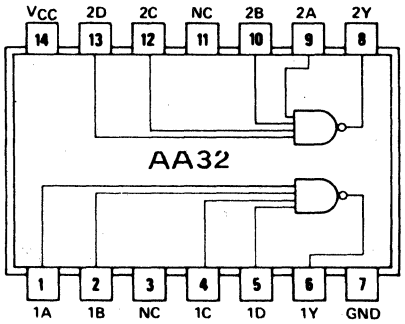

AA32c	2	3	4	5	6	9	10	11	12	13	14	7
	1A	1B	1C	1D	1Y	2A	2B	2C	2D	2Y	+V	−V

AA34

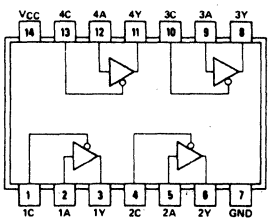

AA50

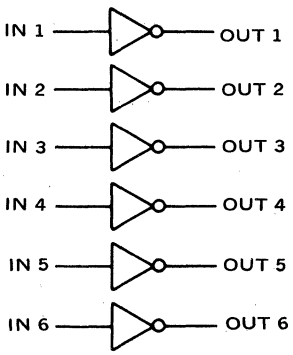

	IN 1	OUT 1	IN 2	OUT 2	IN 3	OUT 3	IN 4	OUT 4	IN 5	OUT 5	IN 6	OUT 6	+V	−V
AA50	1	2	3	4	5	6	9	8	11	10	13	12	14	7
AA50a	1	14	3	2	5	6	7	8	9	10	13	12	4	11
AA50b	1	2	3	5	6	7	8	9	11	12	13	14	4	10
AA50c	3	2	5	4	7	6	9	10	11	12	14	15	1	8
AA50d*,**	8	7	9	6	10	5	12	3	13	2	14	1	11	4
AA50e	2	7	4	3	6	5	8	9	10	11	12	13	14	7
AA50f*,**	1	14	2	13	3	12	4	11	5	10	6	9	7	8
AA50g*,***	2	15	3	14	4	13	5	12	6	11	7	10	16	8
AA50h	2	14	3	13	4	12	5	11	6	10	7	9	8	1

* Open Collector Output
** Open Emitter Output
*** 2K Pull Up Output
**** 6K Pull Up Output

22. LOGIC/BLOCK DRAWINGS

AA51

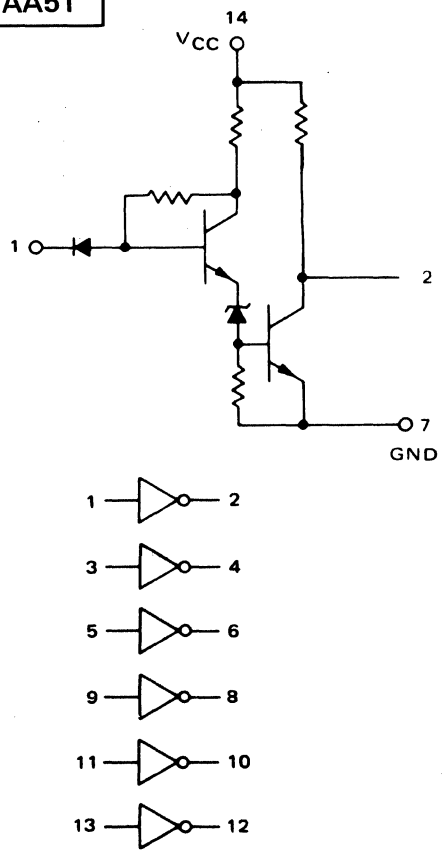

AA52

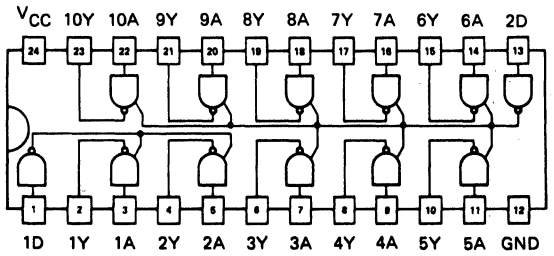

AA53

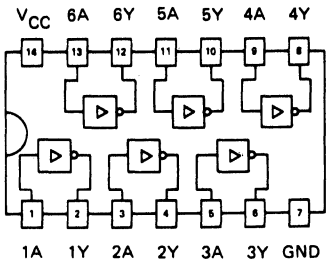

AA54

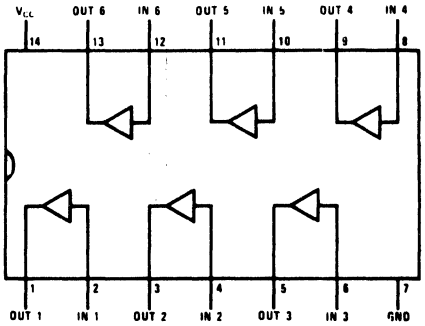

	1 IN	1 OUT	2 IN	2 OUT	3 IN	3 OUT	4 IN	4 OUT	5 IN	5 OUT	6 IN	6 OUT	+V	−V
AA54a	3	2	5	4	7	6	9	10	11	12	14	13	1	8
AA54b	1	2	3	4	5	6	9	8	11	10	13	12	14	7

AA55

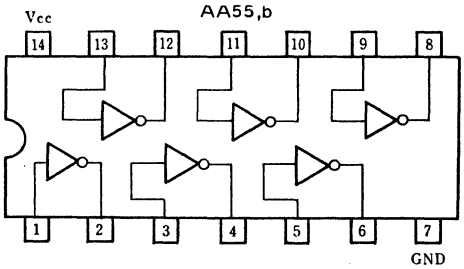

Hex Inverter

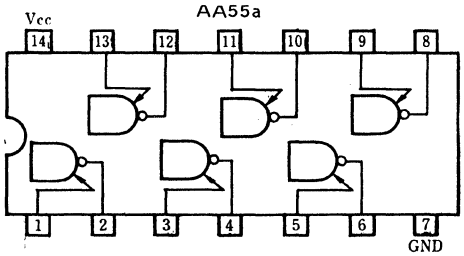

Hex Inverter without Input Diode

AA56

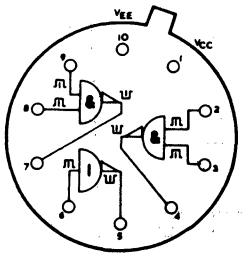

AA57

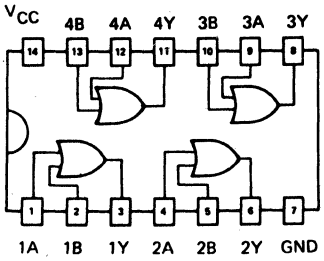

AA58

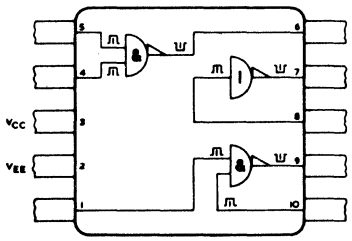

AA59

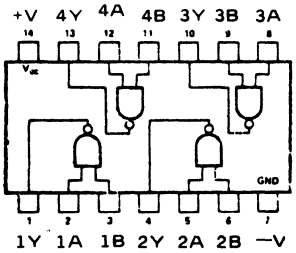

22. LOGIC/BLOCK DRAWINGS

AA78

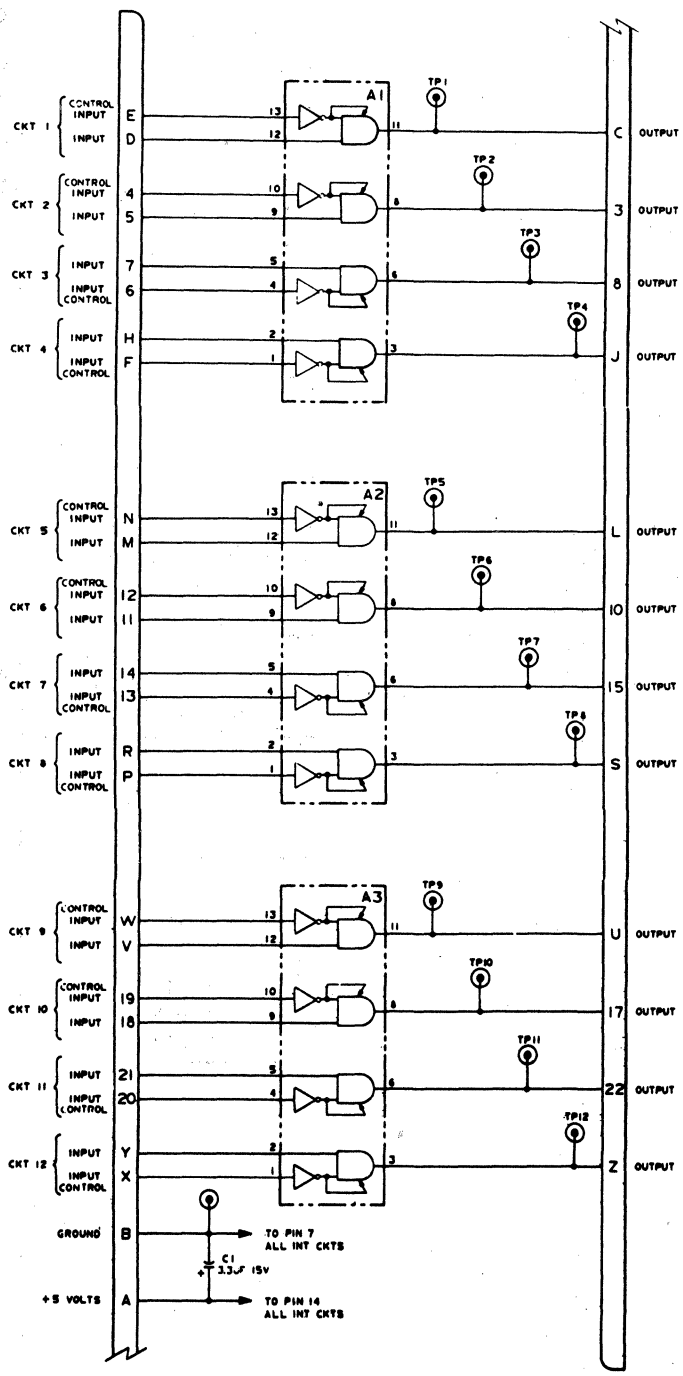

AA79

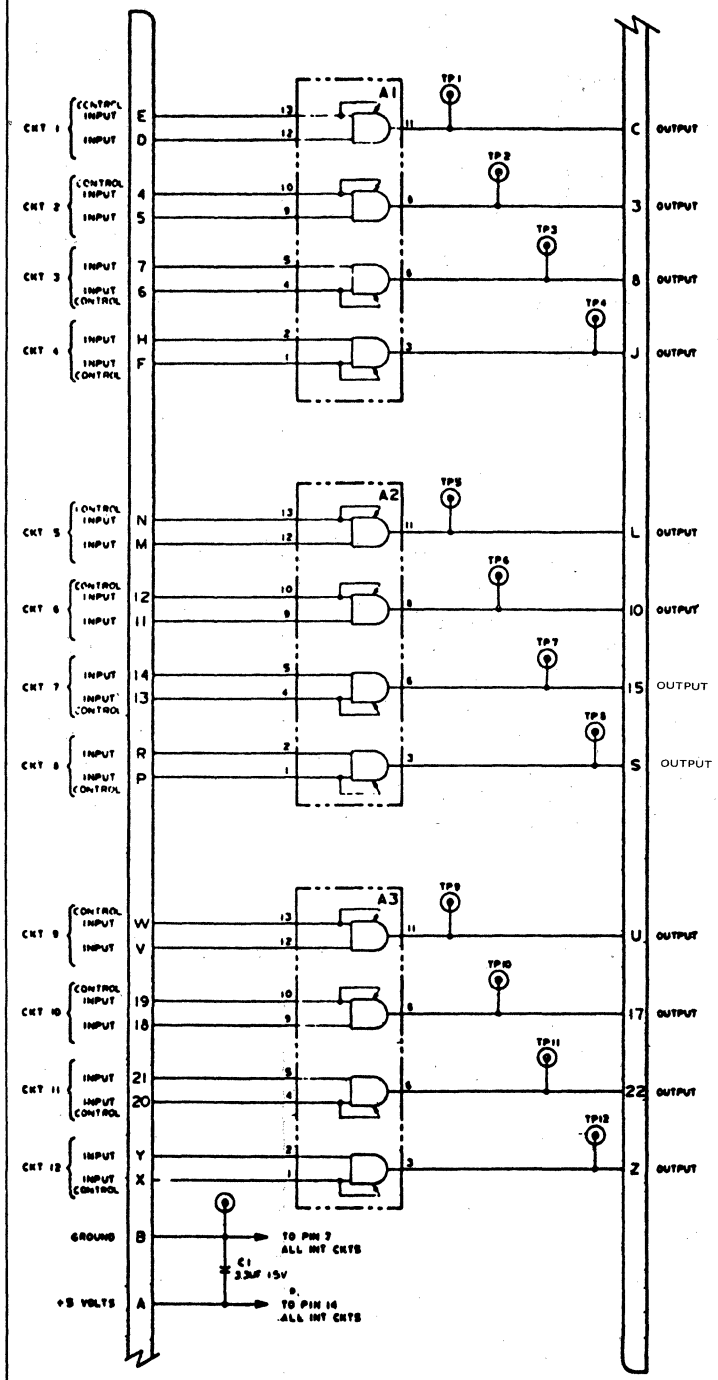

22. LOGIC/BLOCK DRAWINGS

AA87

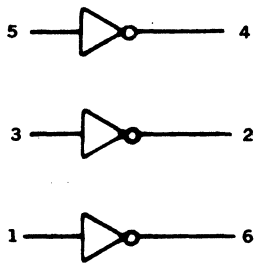

AA91

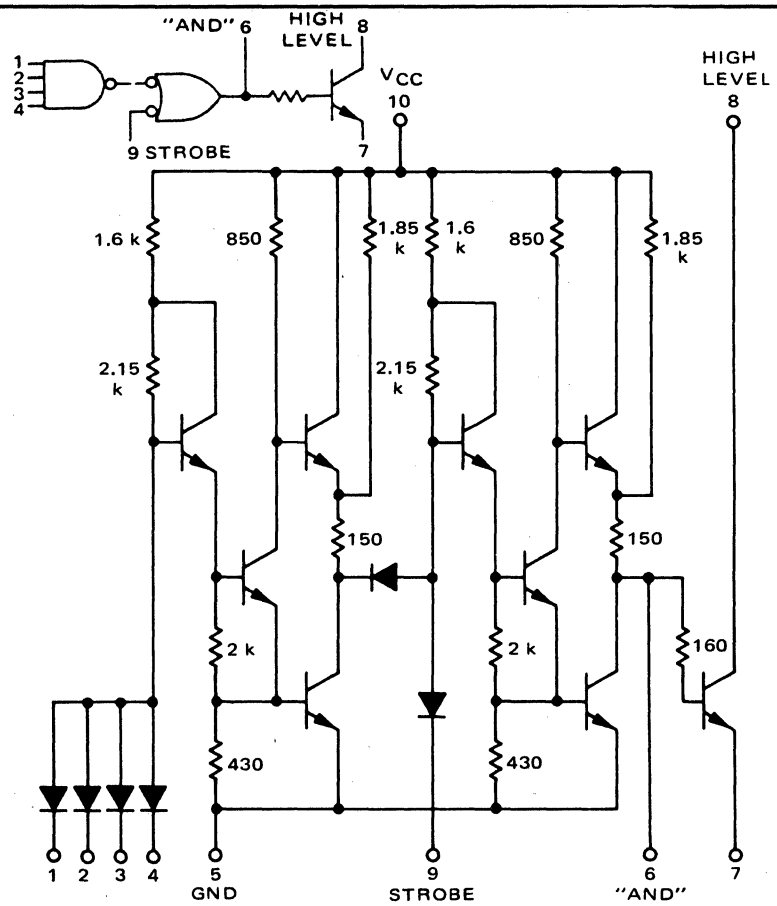

AA92

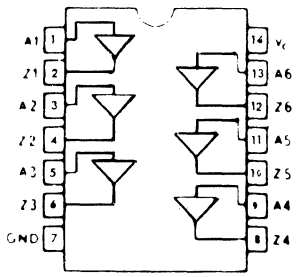

AA95

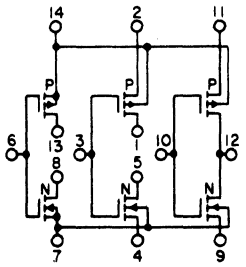

Terminal No. 14 = V_{DD}

Terminal No. 7 = V_{SS}

AA104

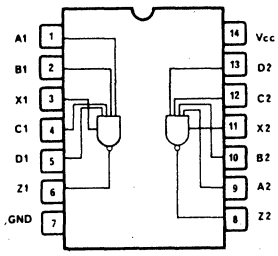

AA105

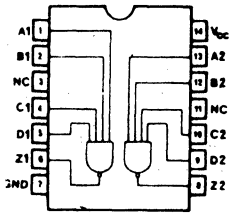

AA109

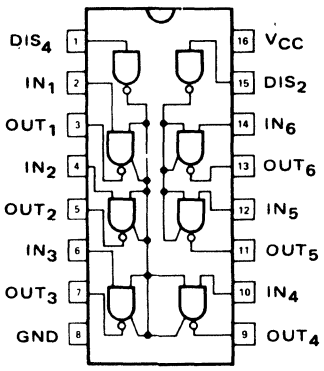

AA110

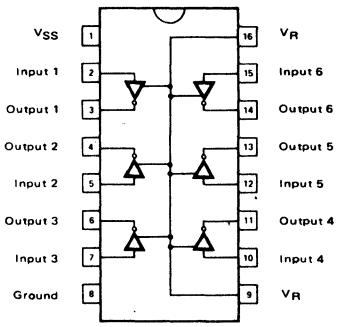

22. LOGIC/BLOCK DRAWINGS

AA114

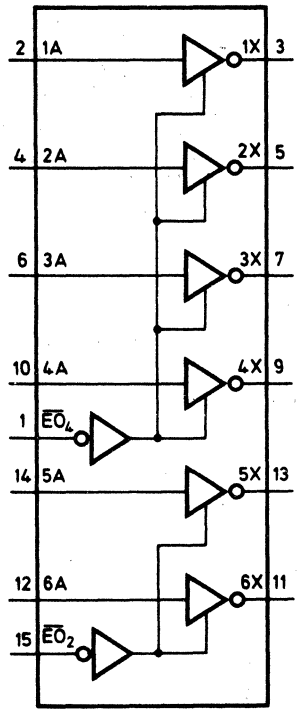

AA115

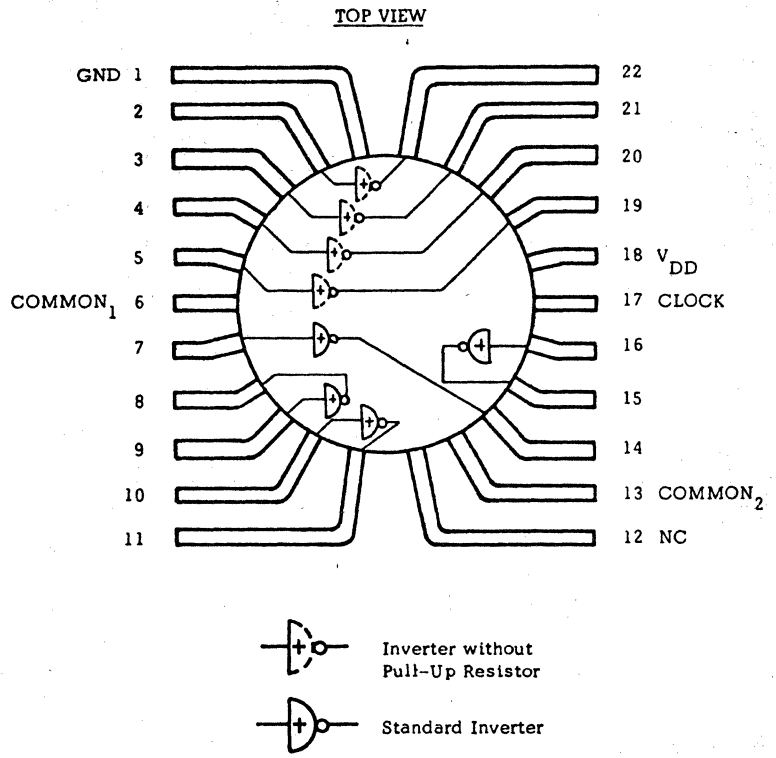

AA117

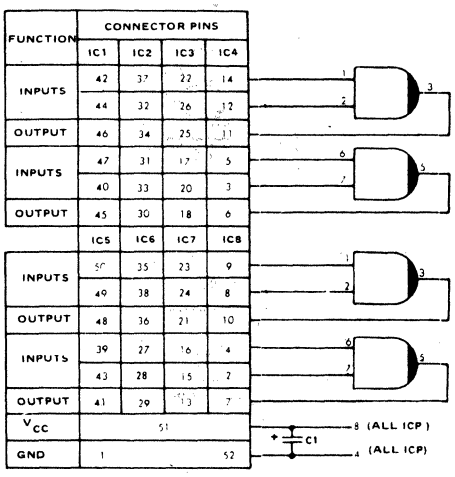

FUNCTION	CONNECTOR PINS			
	IC1	IC2	IC3	IC4
INPUTS	42	37	22	14
	44	32	26	12
OUTPUT	46	34	25	11
INPUTS	47	31	17	5
	40	33	20	3
OUTPUT	45	30	18	6
	IC5	IC6	IC7	IC8
INPUTS	50	35	23	9
	49	38	24	8
OUTPUT	48	36	21	10
INPUTS	39	27	16	4
	43	28	15	2
OUTPUT	41	29	13	7
V_{CC}	51			
GND	1			52

AA118

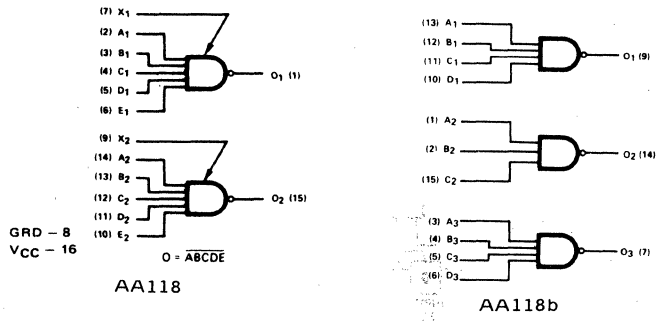

AA119

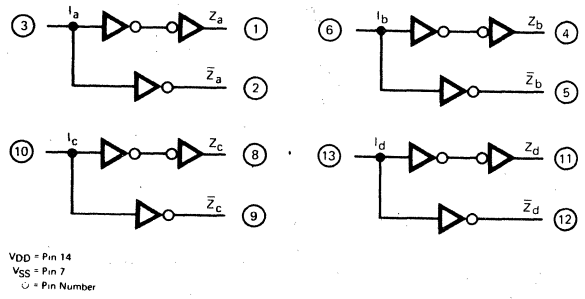

22. LOGIC/BLOCK DRAWINGS

AA139

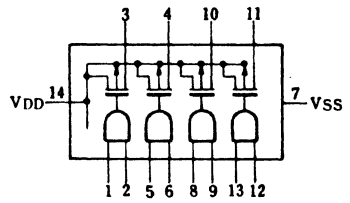

AA163

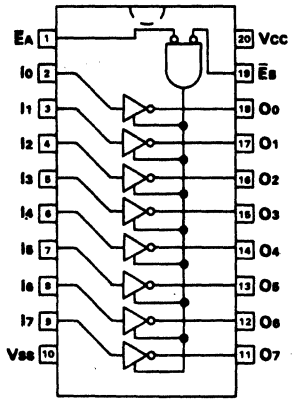

AA164

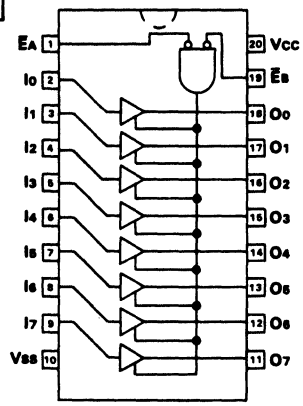

AA172

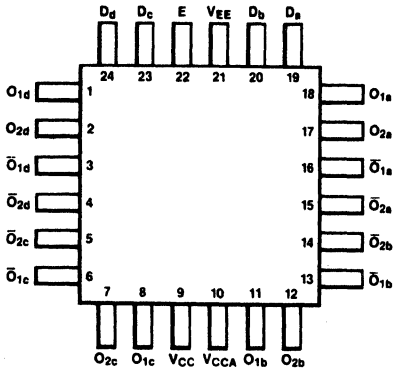

AB1

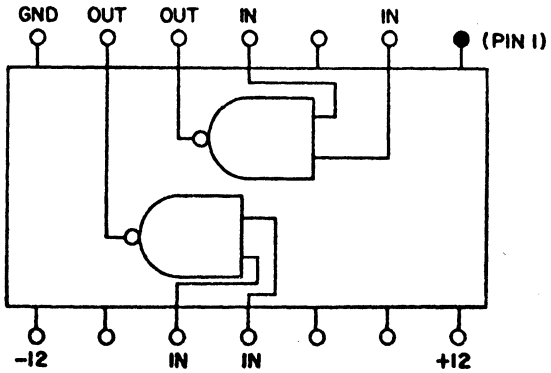

AB2

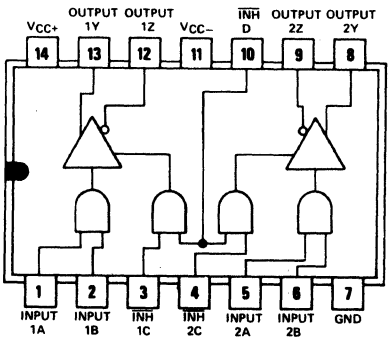

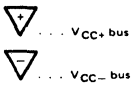

AB3

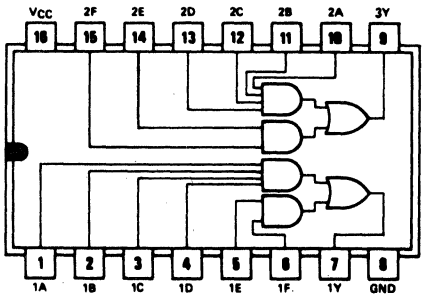

AB6

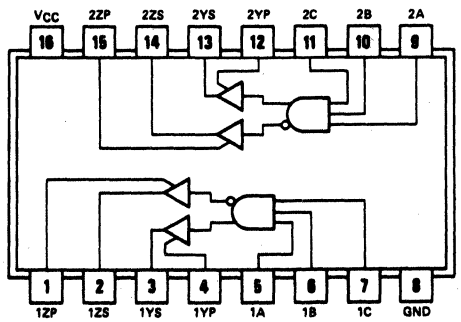

AB7

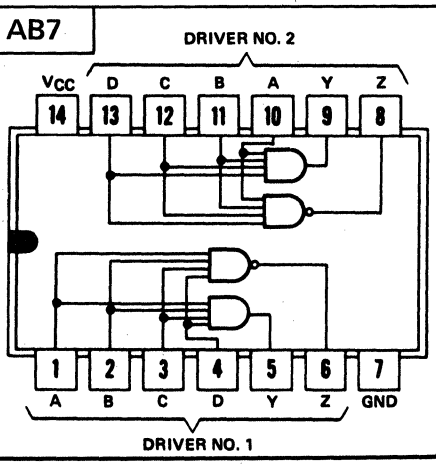

22. LOGIC/BLOCK DRAWINGS

AB8

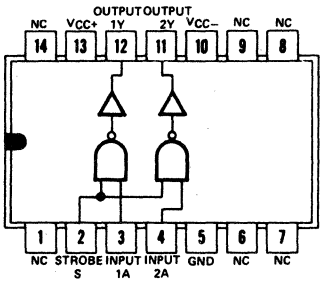

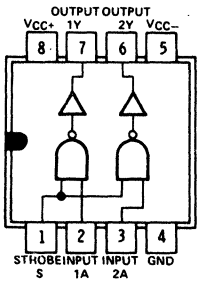

AB9

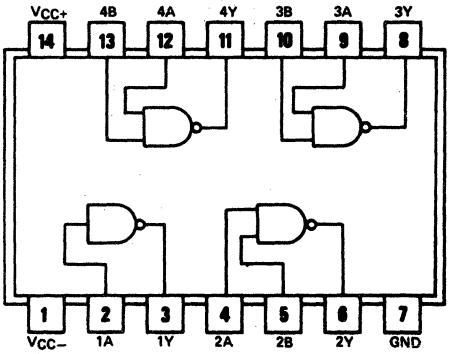

AB15

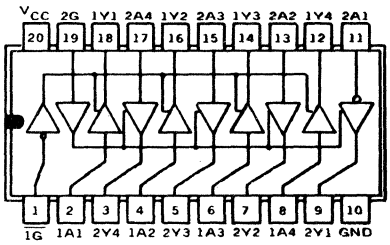

AB20

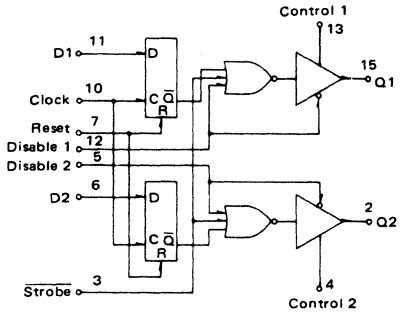

AB22

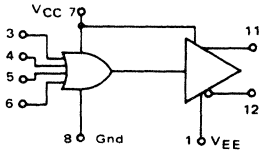

AB24

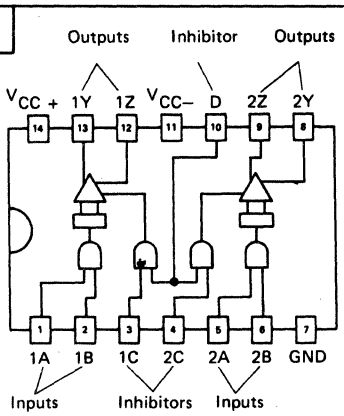

AB25

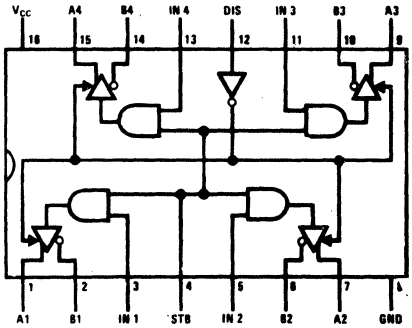

AB26

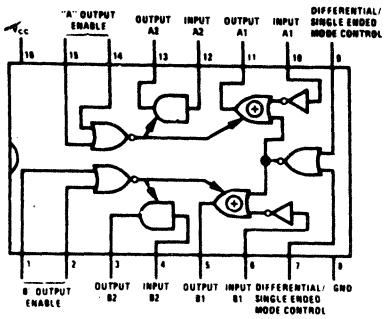

AB27

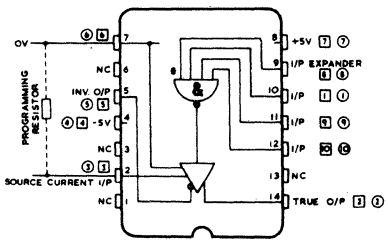

AB29

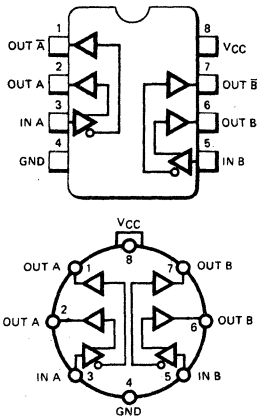

22. LOGIC/BLOCK DRAWINGS

AB30

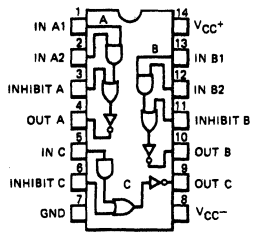

AB31

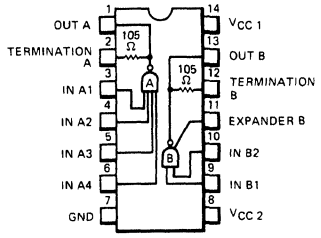

AB32

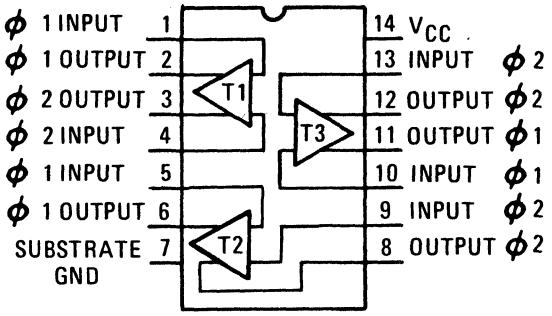

AB45

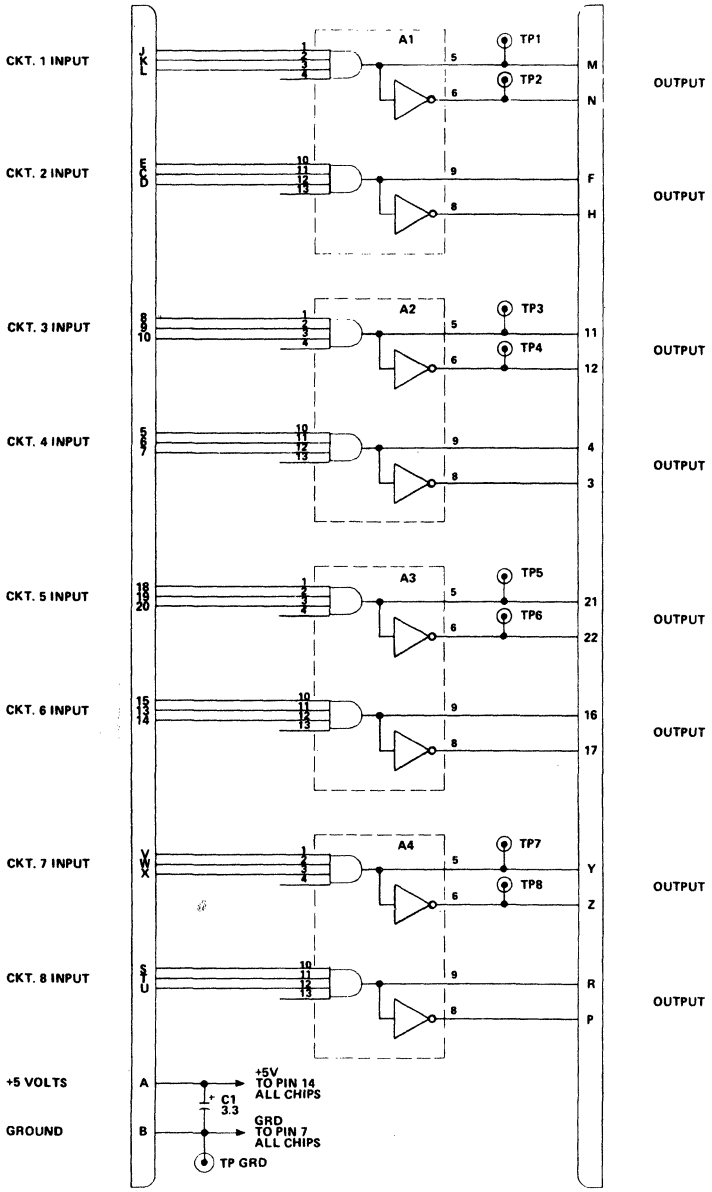

22. LOGIC/BLOCK DRAWINGS

AB51

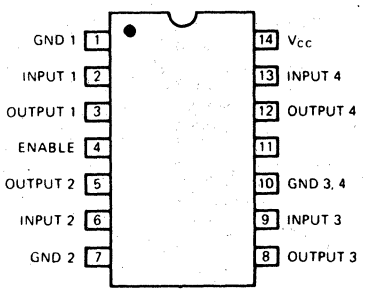

AB52

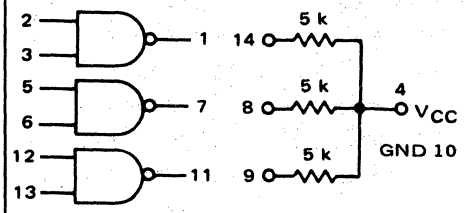

AB53

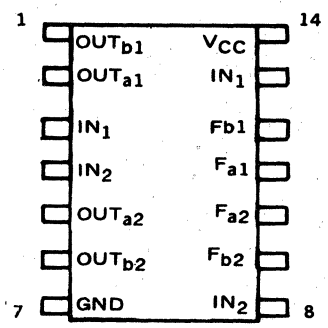

AB55

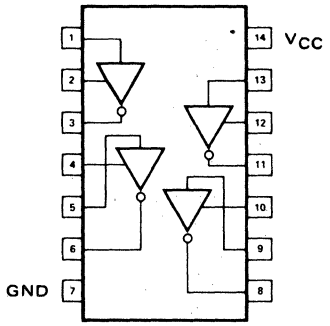

AB56

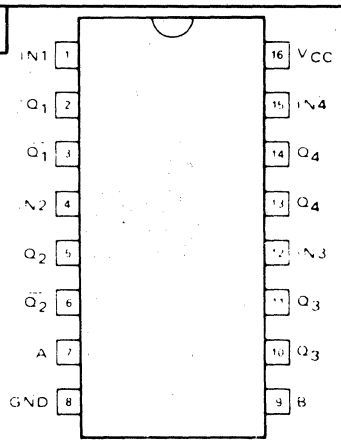

AB58

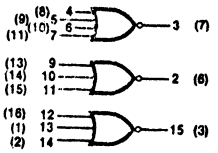

V_{CC1} = Pin 1 (5)
V_{CC2} = Pin 16 (4)
V_{EE} = Pin 8 (12)
( ) = Flatpak

AB59

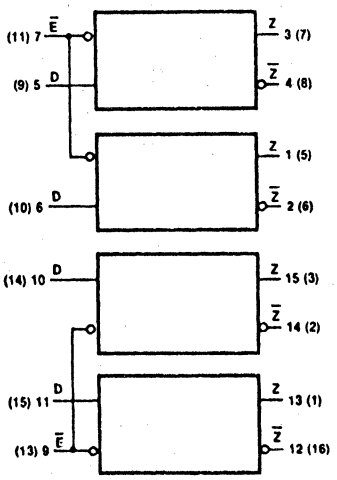

V_{CC} = Pin 16 (4)
V_{EE} = Pin 8 (12)
( ) = Flatpak

AB71

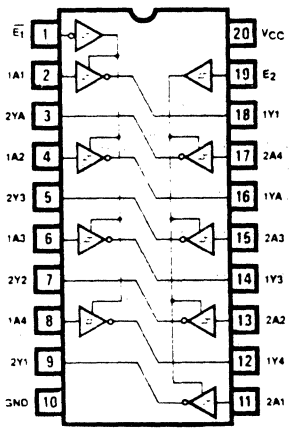

AB73

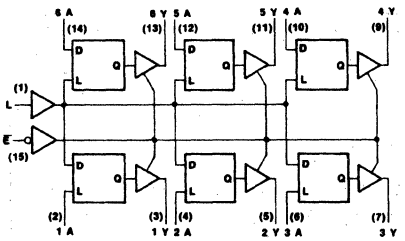

AB74

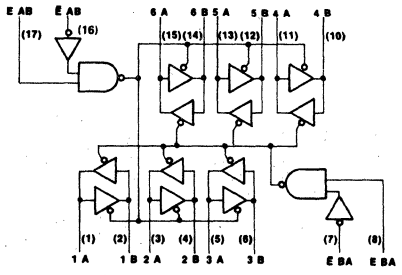

AB75

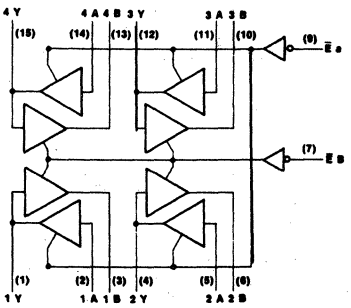

22. LOGIC/BLOCK DRAWINGS

AB78

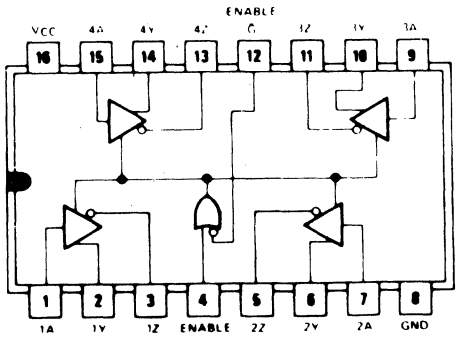

AB81

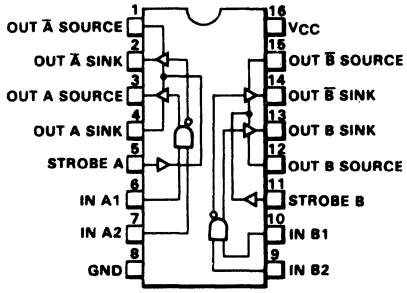

AB83

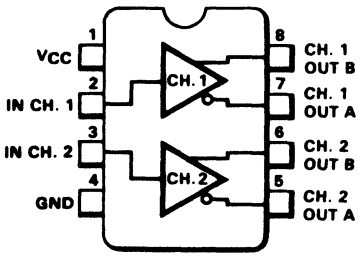

AB84

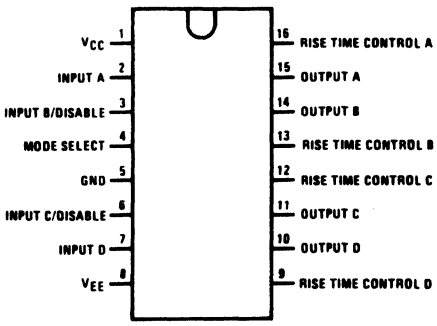

AB105

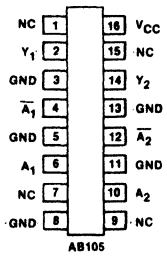

AC1

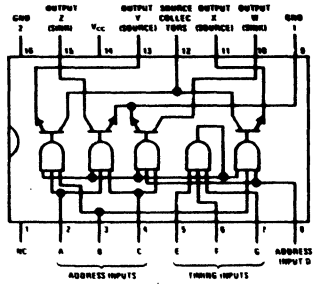

GND 1 and GND 2 are to be used in parallel.

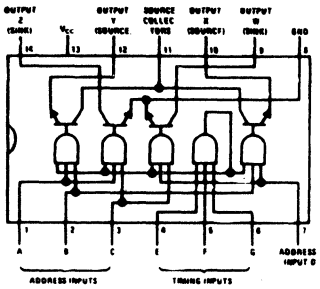

INPUT CLAMPING DIODES FOR AC1a ONLY.

AC8

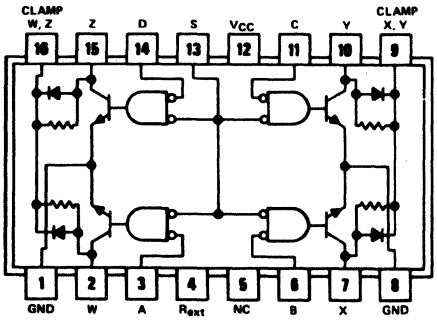

AC9

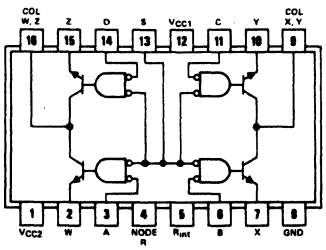

AC10

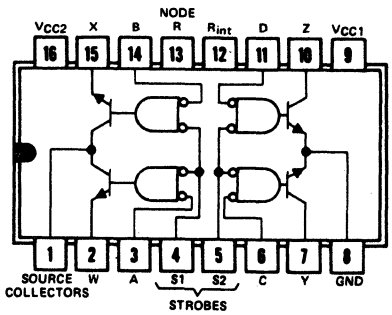

AC12

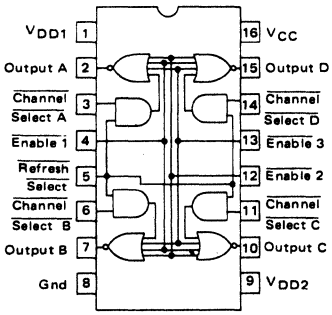

AC13

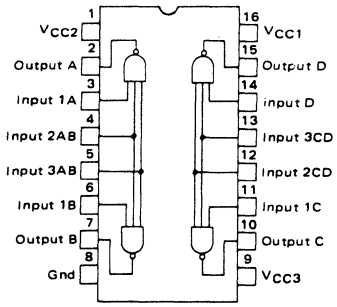

22. LOGIC/BLOCK DRAWINGS

AC15

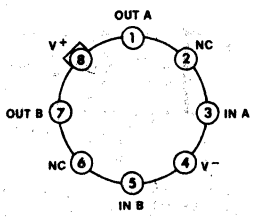

AC15

Inputs at IN A, IN B
Outputs at OUT A, OUT B
OUT A = $\overline{\text{IN A}}$; OUT B = $\overline{\text{IN B}}$

AC15a

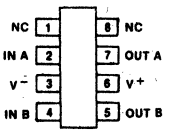

AC15a

Inputs at IN A, IN B
Outputs at OUT A, OUT B
OUT A = $\overline{\text{IN A}}$; OUT B = $\overline{\text{IN B}}$

AC17

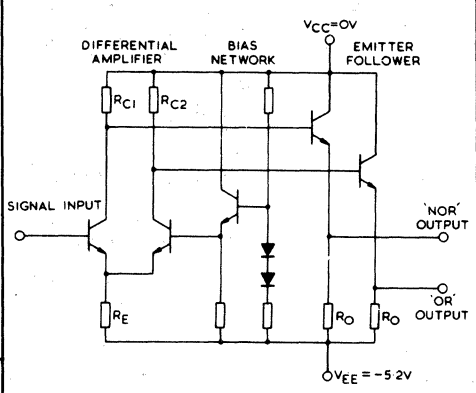

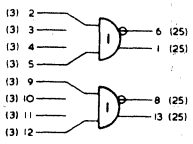

AC19

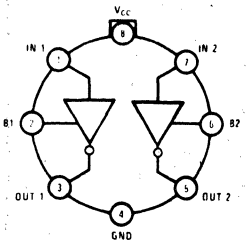

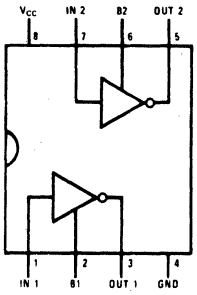

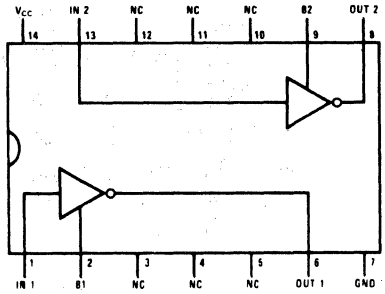

AC20a

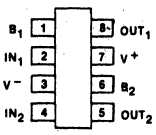

AC20a

Inputs of IN_1, IN_2
Outputs at OUT_1, OUT_2
B_1, B_2 are bootstrap pins
$OUT_1 = \overline{IN_1}$; $OUT_2 = \overline{IN_2}$

AC20b

Inputs at IN_1, IN_2
Outputs at OUT_1, OUT_2
V_{BB_1}, V_{BB_2} are bootstrap pins

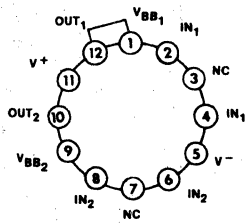

$OUT_1 = \overline{IN_1}$; $OUT_2 = \overline{IN_2}$

AC20c

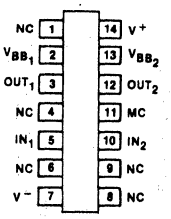

AC20c

Inputs at IN_1, IN_2
Outputs at OUT_1, OUT_2
V_{BB_1}, V_{BB_2} are bootstrap pins
$OUT_1 = \overline{IN_1}$; $OUT_2 = \overline{IN_2}$

AC21

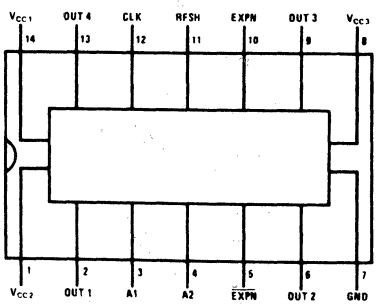

AC22

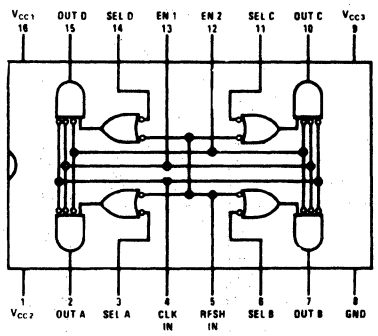

AC23

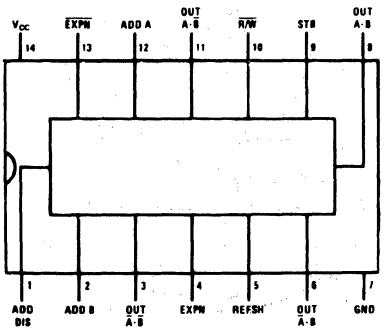

22. LOGIC/BLOCK DRAWINGS

AC26

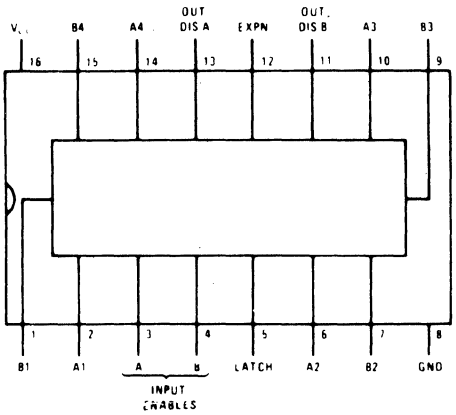

AC27

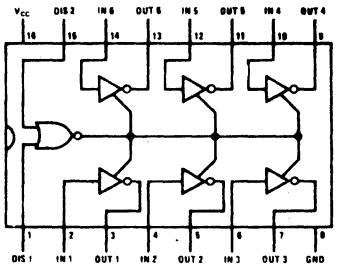

AC30

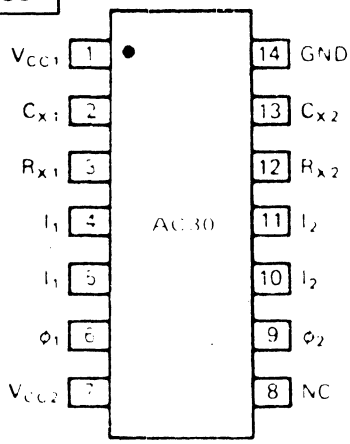

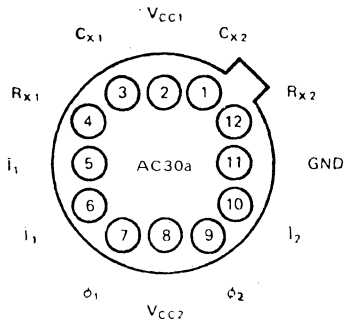

AC32

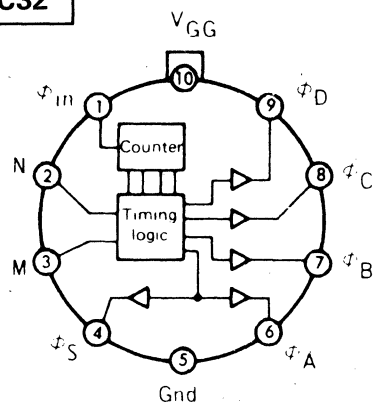

AC31

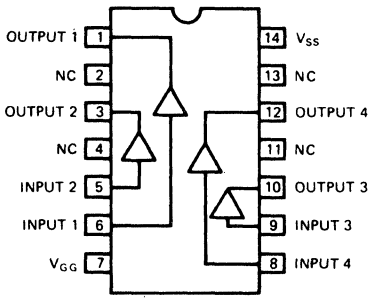

AC31

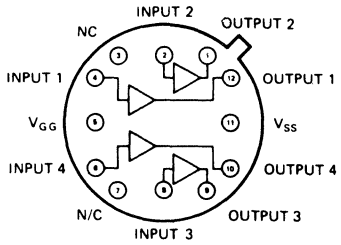

AC31a

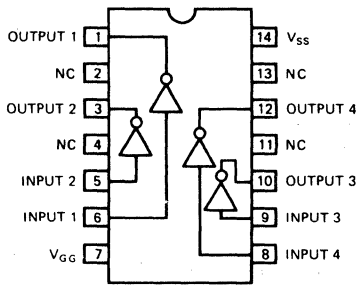

AC31b

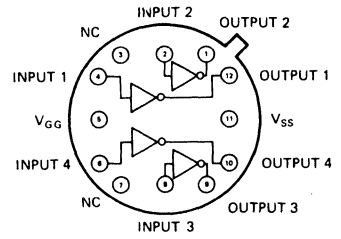

AC31c

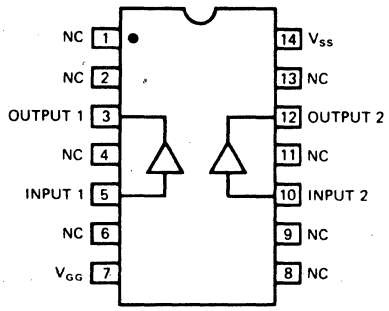

AC31d

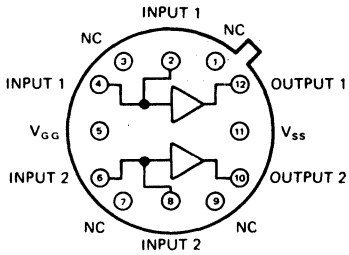

AC31e

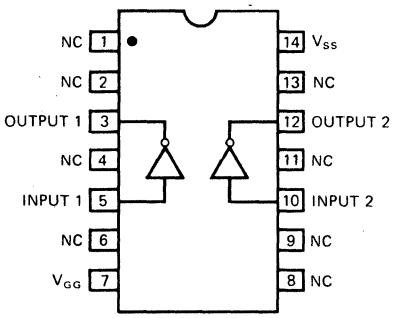

AC31f

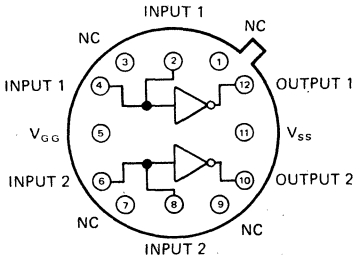

AC31g

22. LOGIC/BLOCK DRAWINGS

AC35

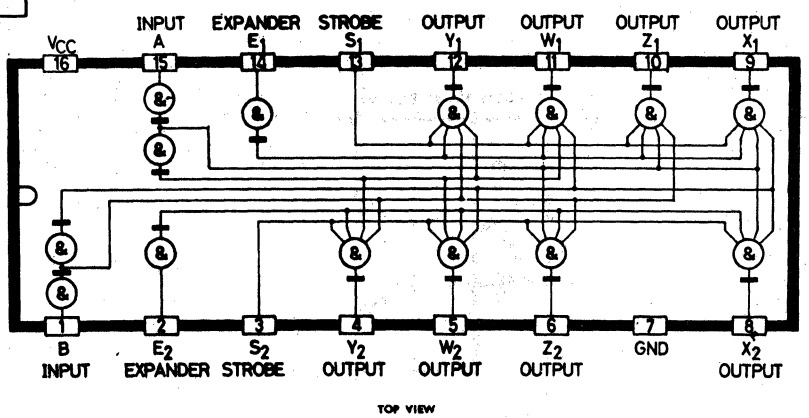

AC36

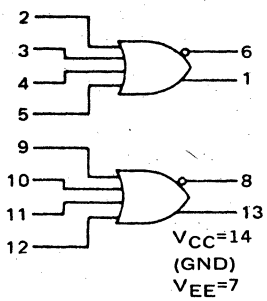

AC37

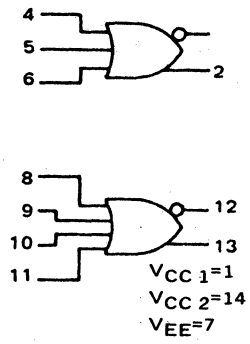

AC42

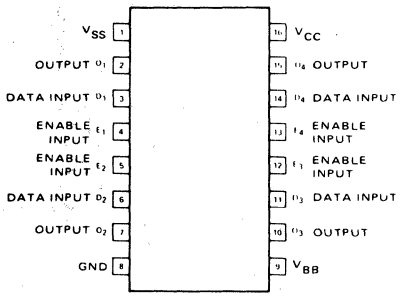

AC46

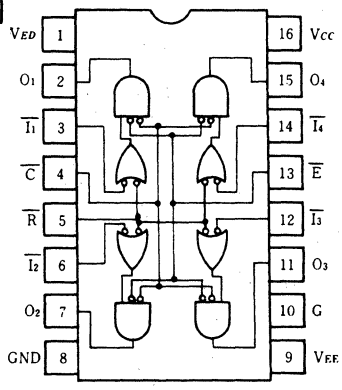

AC49

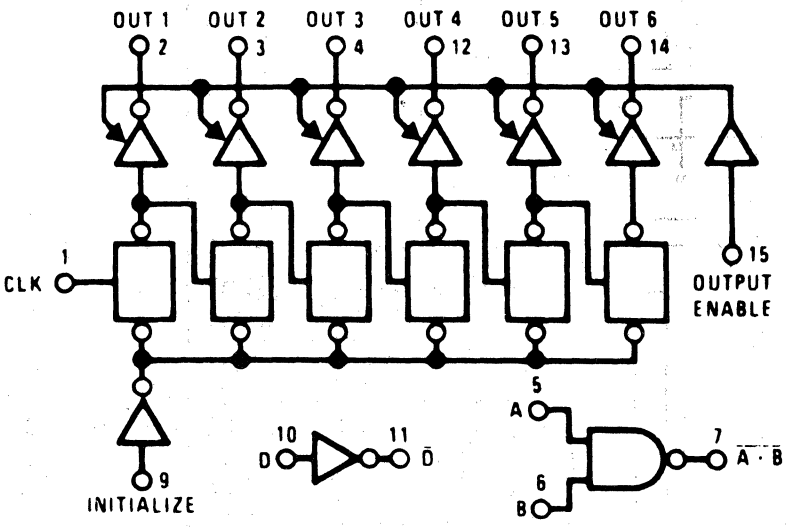

22. LOGIC/BLOCK DRAWINGS

AC50

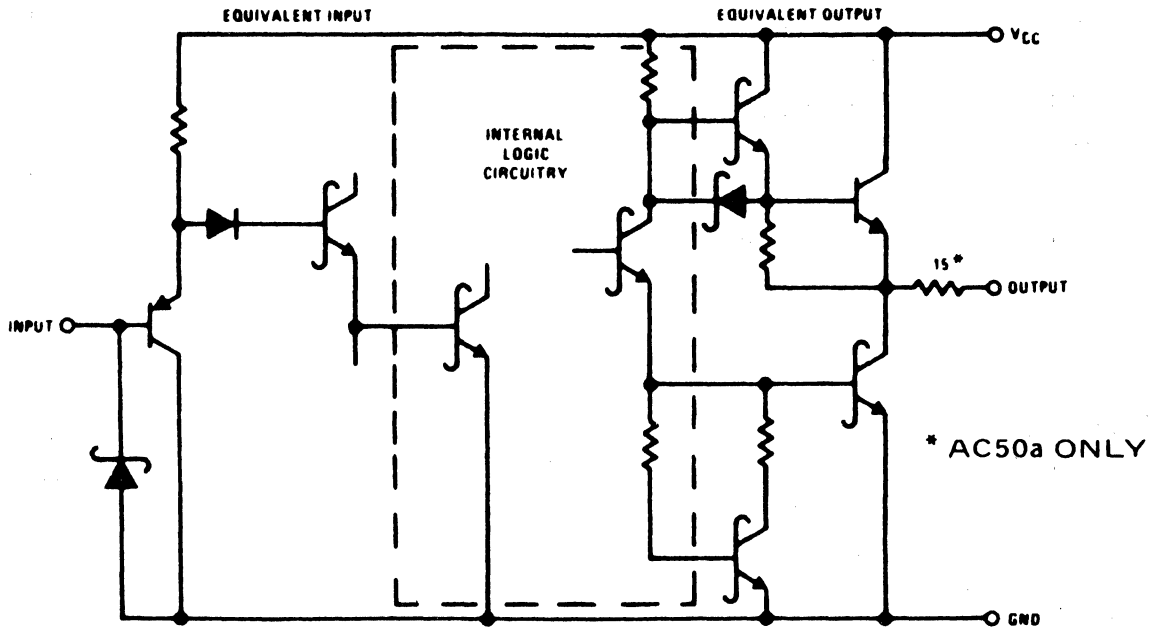

AC51

Positive Logic Y = AE
Recommended PNP Transistors
2N5910, 2N5771

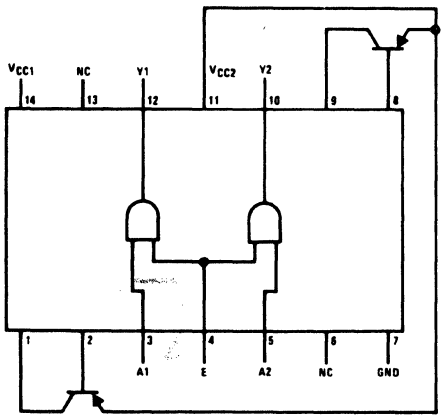

AC53

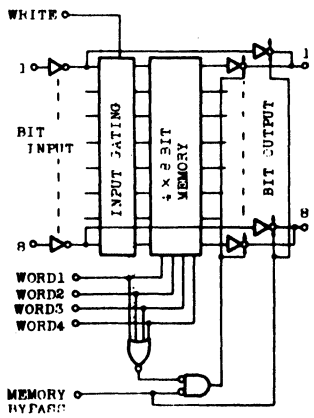

AC53a

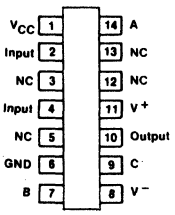

AC54

FUNCTION	AC54a PIN NO.	AC54 PIN NO.
V+	11	14
V−	5	7
Ø1 INPUT A	2	4
Ø1 BIAS	3	5
Ø1 INPUT B	4	6
Ø1 OUTPUT	12	1
Ø2 INPUT A	8	11
Ø2 BIAS	7	10
Ø2 INPUT B	6	8
Ø2 OUTPUT	10	13
N. C.	1, 9	2, 3, 9, 12

22. LOGIC/BLOCK DRAWINGS

AD1

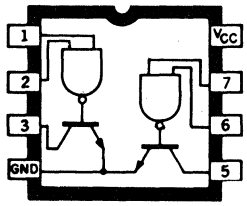

AD2

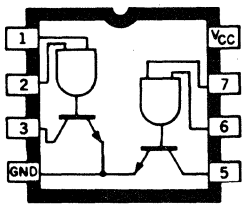

AD3

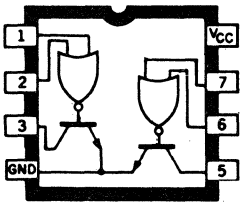

AD4

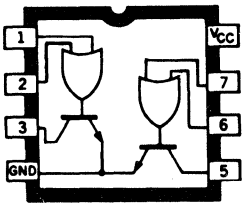

AD29

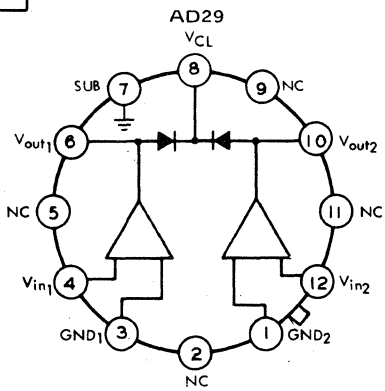

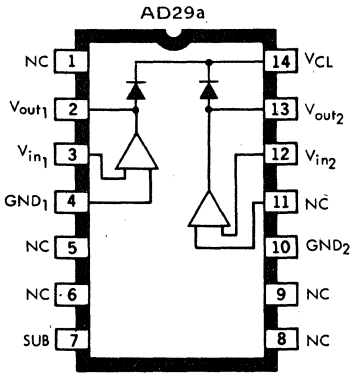

AD34

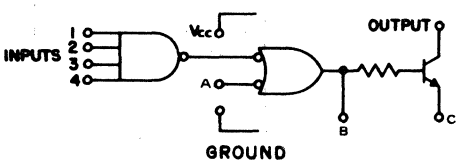

	INPUTS				A	B	C	OUTP	VCC	GND
	1	2	3	4						
AD34	1	2	3	4	13	10	8	9	14	7
AD34a	1	2	3	4	9	6	7	8	10	5

AD35

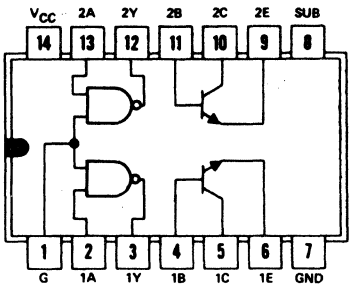

AD40

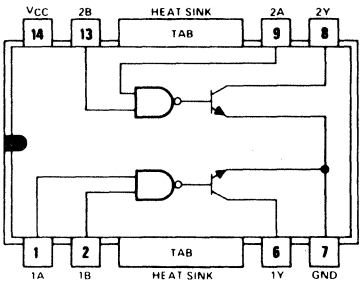

AD45

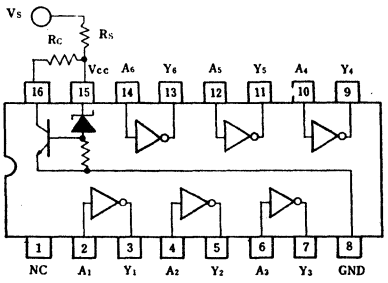

$Y = \overline{A}$
$R_C = 62\,\Omega$, 1 Watt
$R_S = 120\,\Omega$, 2Watt

AD46

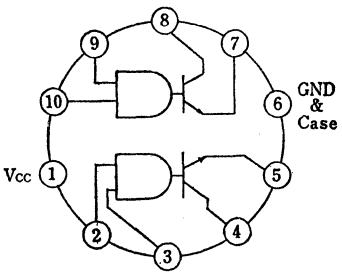

22. LOGIC/BLOCK DRAWINGS

AD49

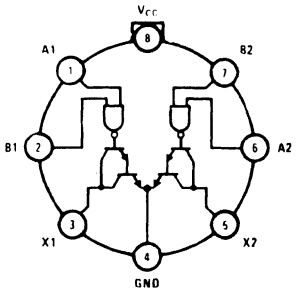

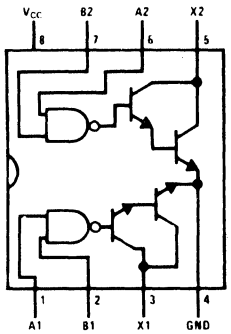

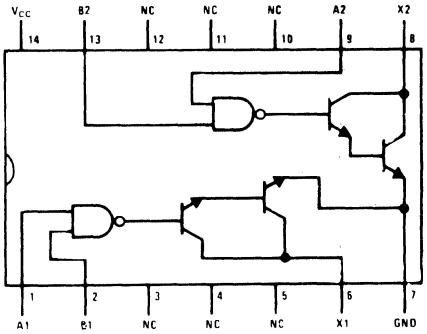

AD54

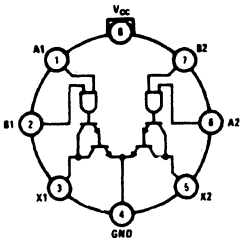

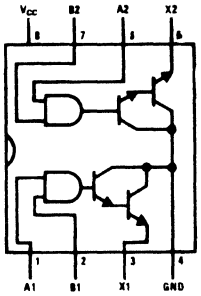

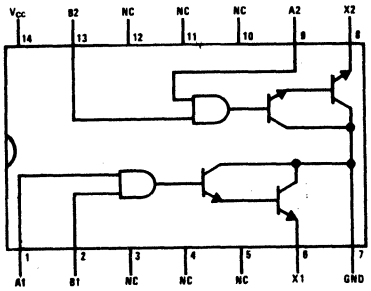

AD66

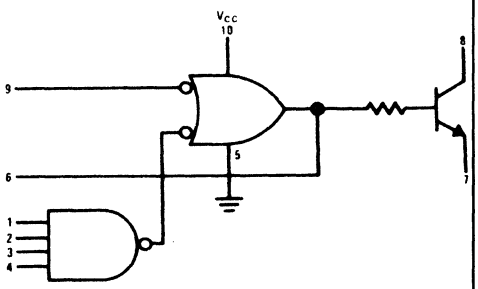

AD92

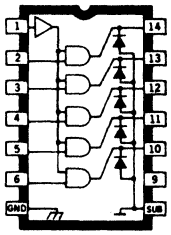

AD94

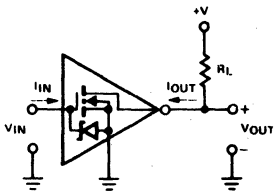

	IN	OUT	GRD
AD94	1	2	Case
AD94a	2	3	1

AD95

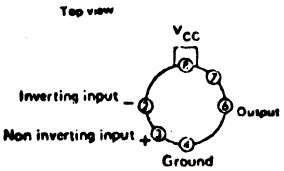

AD104

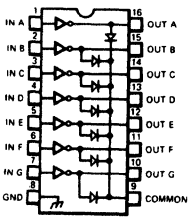

AD104a

AD105

BOTTOM VIEW

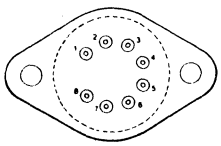

Pin	Function
1	Output-driver 1
2	Emitter-driver 1
3	Ground
4	Input-driver 1
5	VCC
6	Input-driver 2
7	Emitter-driver 2
8	Output-driver 2

22. LOGIC/BLOCK DRAWINGS

AD106

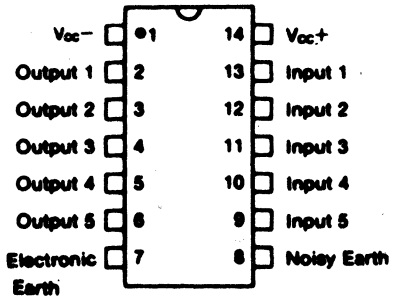

AD107

Pin No.	Function
1	Output Enable
2	Output 6
3	Output 7
4	Output 8
5	Output 9
6	Output 10
7	Data Output
8	Ground
9	Clock Input
10	Data Input
11	Output 1
12	Output 2
13	Output 3
14	Output 4
15	Output 5
16	V_{CC}

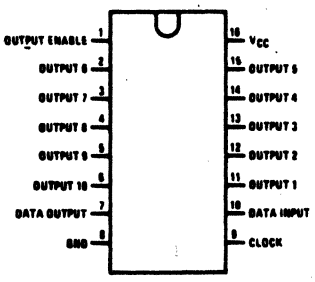

AD109

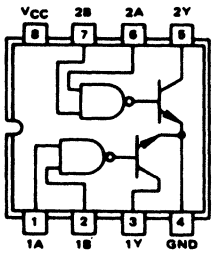

MC75461 – Positive AND

TRUTH TABLE

A	B	Y
L	L	L ("on" state)
L	H	L ("on" state)
H	L	L ("on" state)
H	H	H ("off" state)

a H = high level, L = low level.

MC75463 – Positive OR

TRUTH TABLE

A	B	Y
L	L	L ("on" state)
L	H	H ("off" state)
H	L	H ("off" state)
H	H	H ("off" state)

c H = high level, L = low level

MC75464 – Positive NOR

TRUTH TABLE

A	B	Y
L	L	H ("off" state)
L	H	L ("on" state)
H	L	L ("on" state)
H	H	L ("on" state)

d H = high level, L = low level.

AD150

Switching Transistor, Non-inverting Power Driver

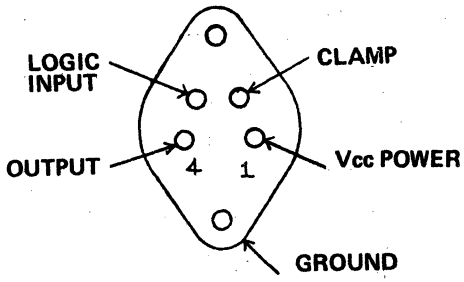

AD151

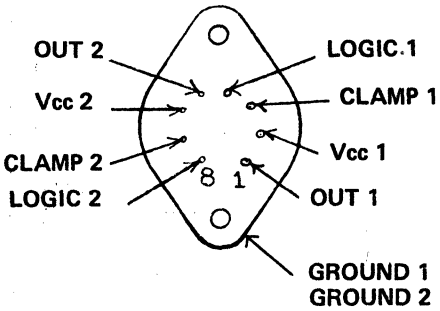

AD152

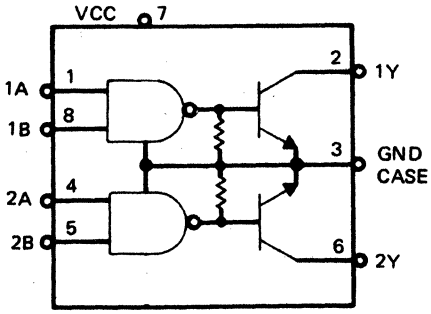

DUAL "AND" DRIVER
POSITIVE LOGIC Y=AB

AD153

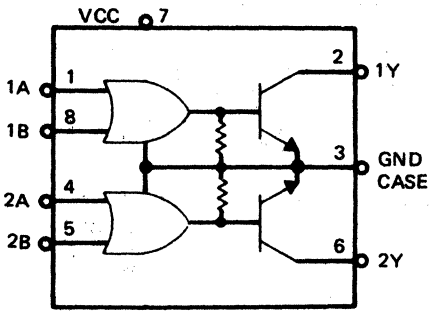

DUAL "NOR" DRIVER
POSITIVE LOGIC $Y = \overline{A+B}$

22. LOGIC/BLOCK DRAWINGS

AD154

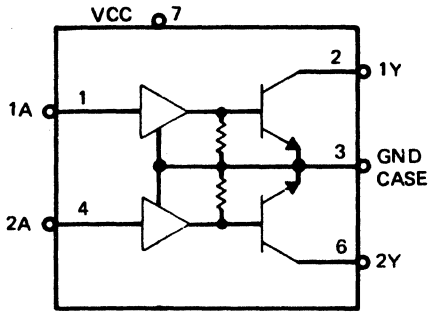

DUAL "INVERTER"
POSITIVE LOGIC Y = $\overline{A}$

AD155

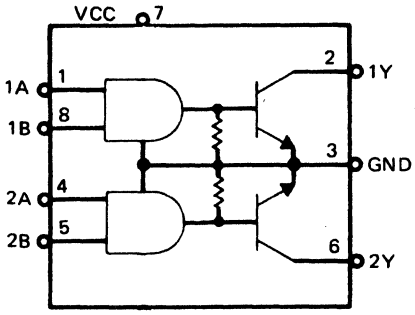

DUAL "NAND" DRIVER
POSITIVE LOGIC Y = $\overline{AB}$

AD156

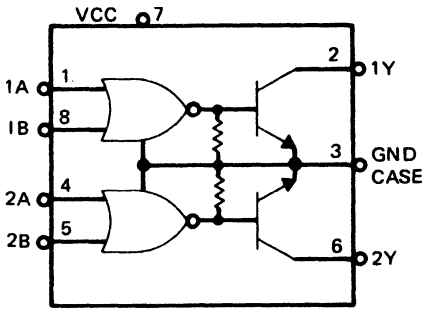

DUAL "OR" DRIVER
POSITIVE LOGIC Y = A+B

AD157

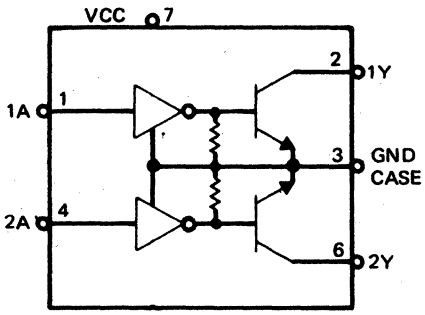

DUAL "BUFFER"
POSITIVE LOGIC Y = A

AD161

Quad Bi-polar Driver

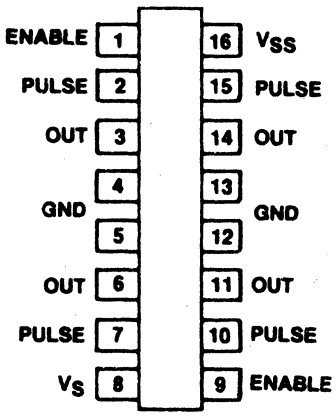

22. LOGIC/BLOCK DRAWINGS

AD162 Dual Half Bridge Driver

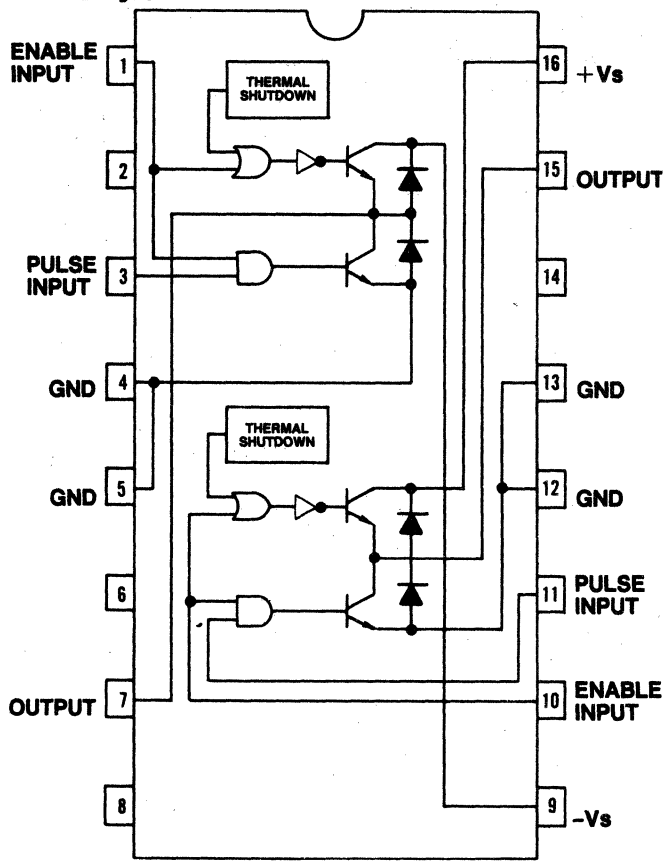

AD163 Quad Driver

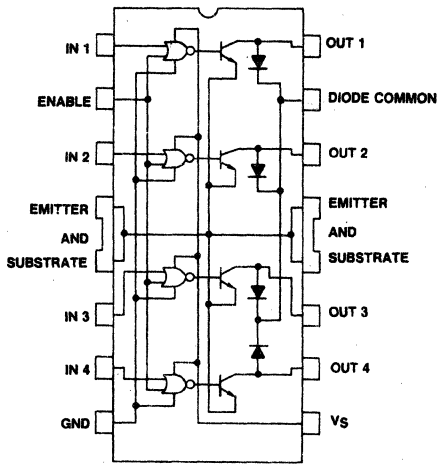

AD164 Solenoid And Motor Driver

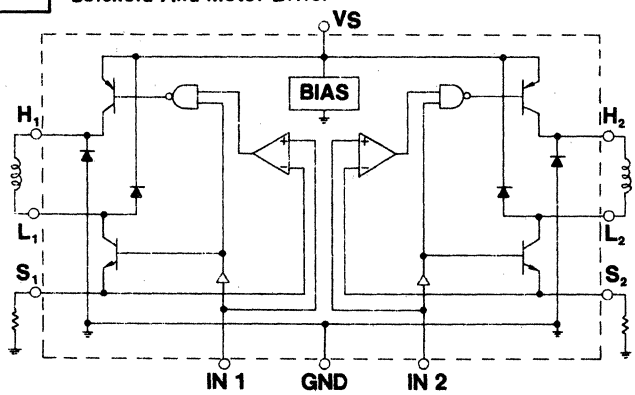

AD165 Dual Solenoid Driver

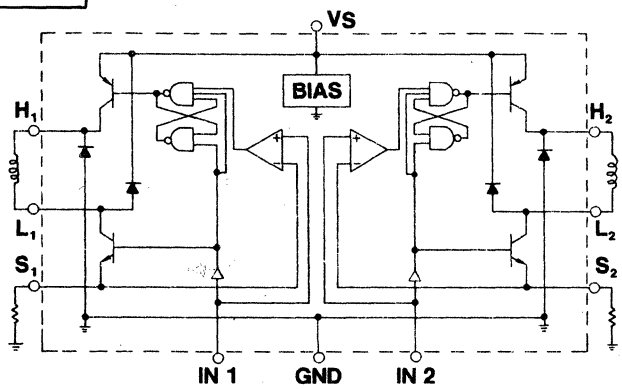

AD166 Solenoid And Motor Driver

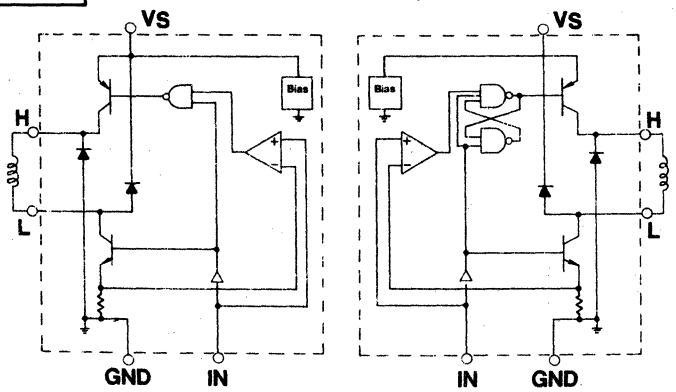

AD167 Dual Hammer Driver

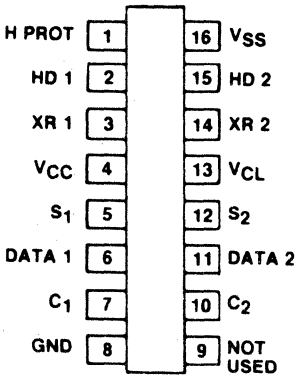

22. LOGIC/BLOCK DRAWINGS

AE1

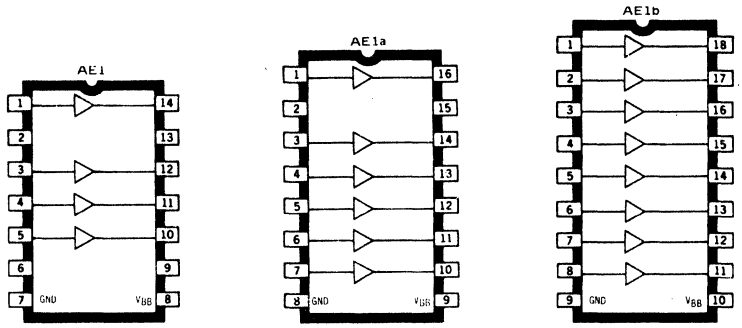

AE6

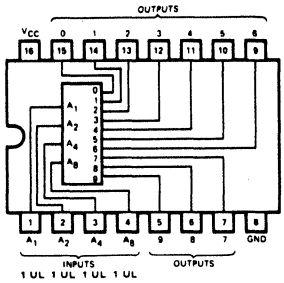

AE7

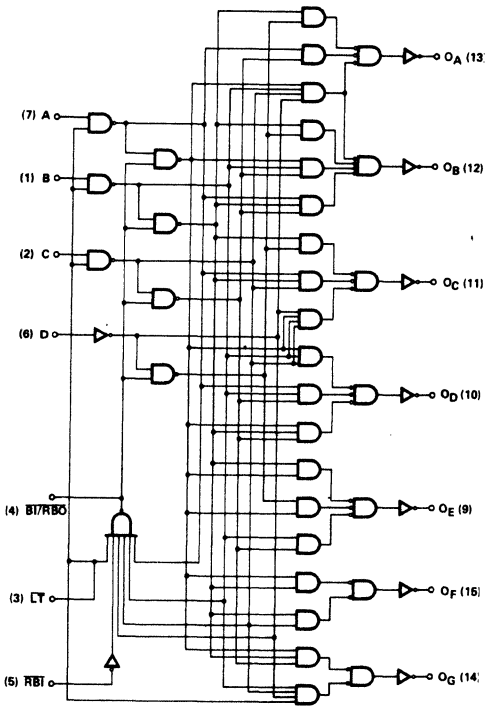

AE8

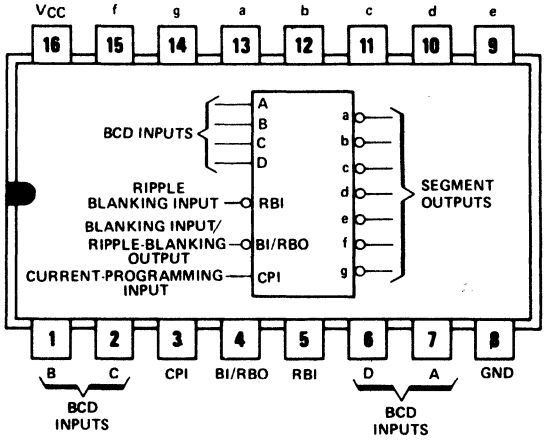

AE15

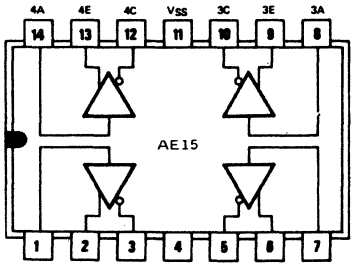

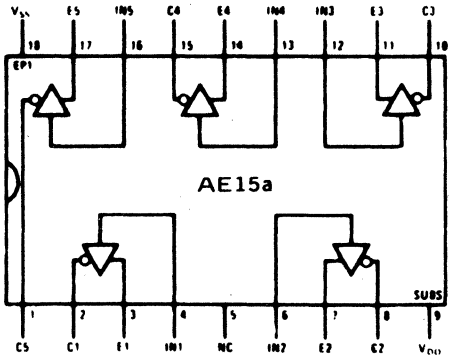

AE16

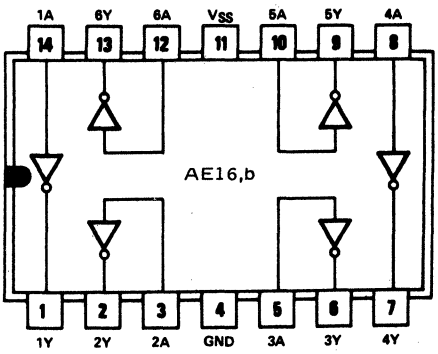

22. LOGIC/BLOCK DRAWINGS

AE23

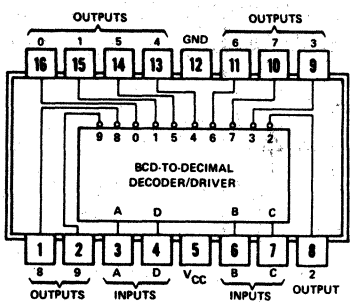

AE26

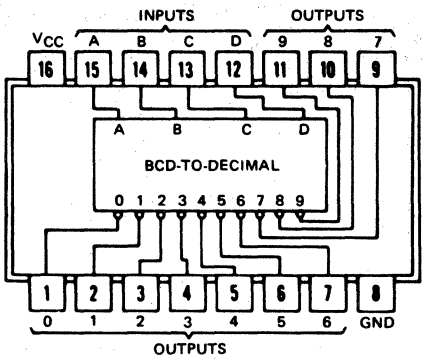

AE28

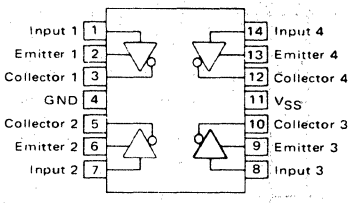

AE42

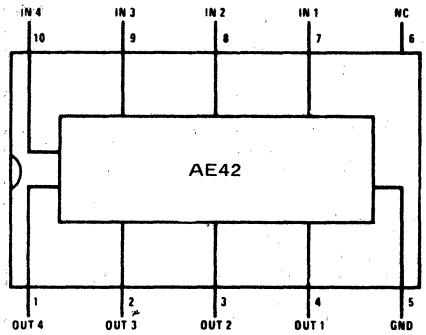

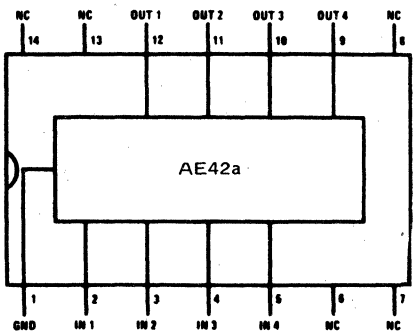

AE43

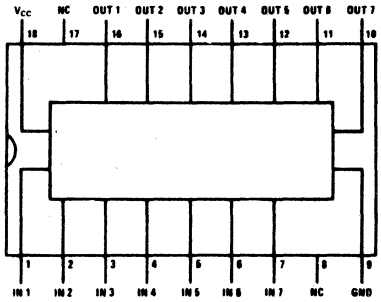

AE44

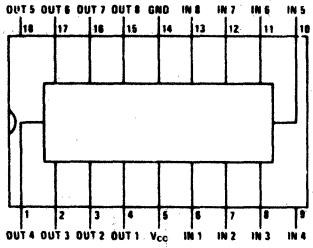

AE45

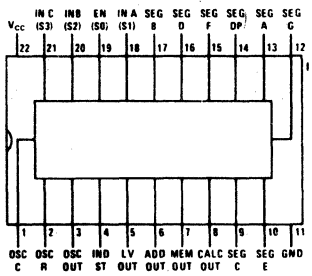

AE46

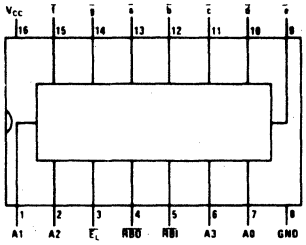

AE47

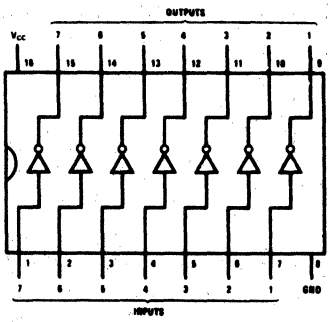

AE48

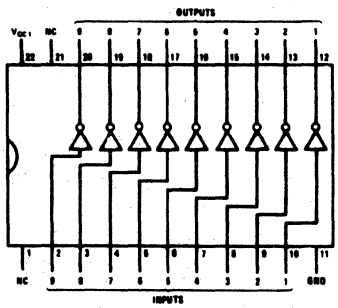

AE49

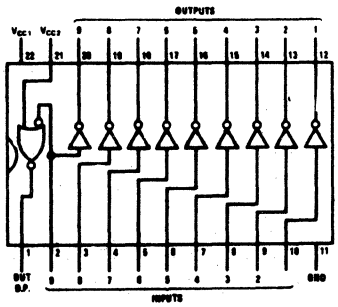

22. LOGIC/BLOCK DRAWINGS

AE50

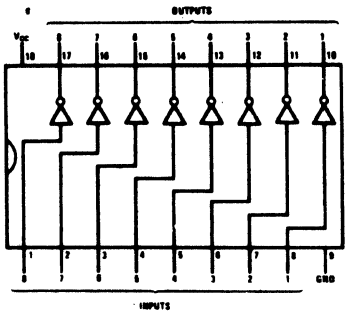

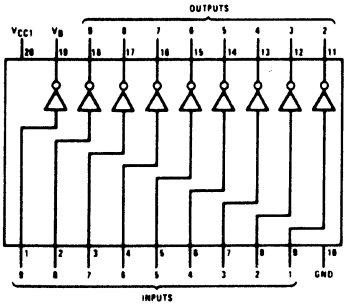

AE50a

AE51

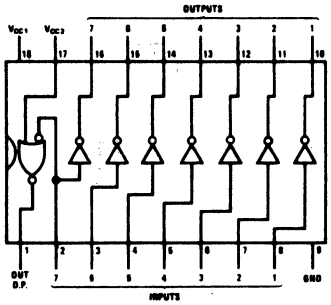

AE53

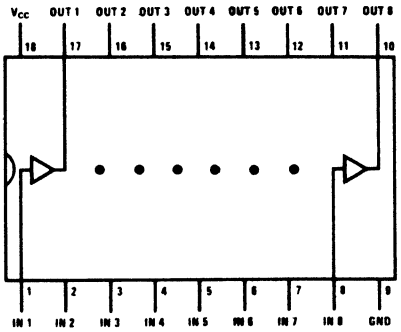

AE54

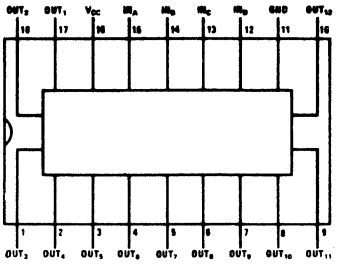

AE55

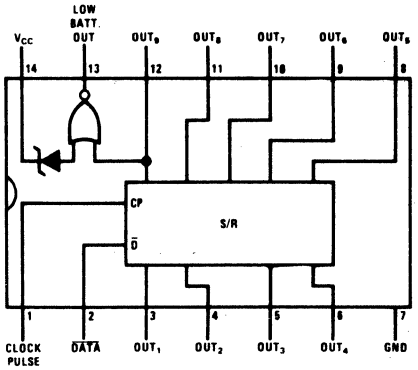

AE58

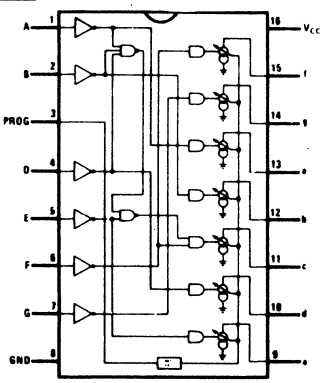

AE59

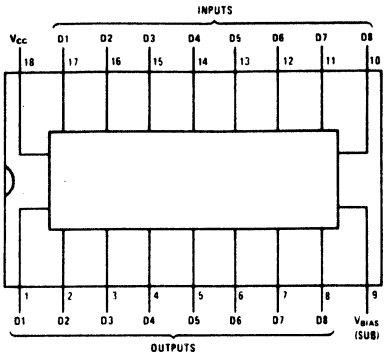

AE62

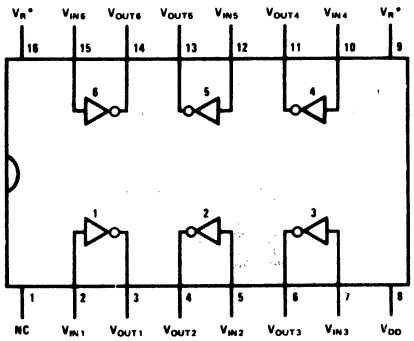

AE63

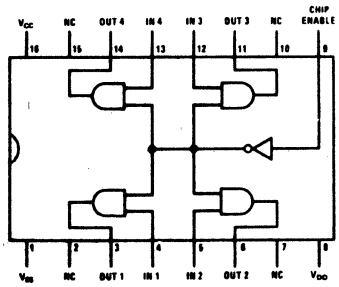

AE66

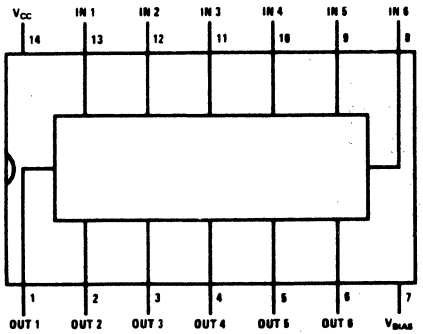

22. LOGIC/BLOCK DRAWINGS

AE68

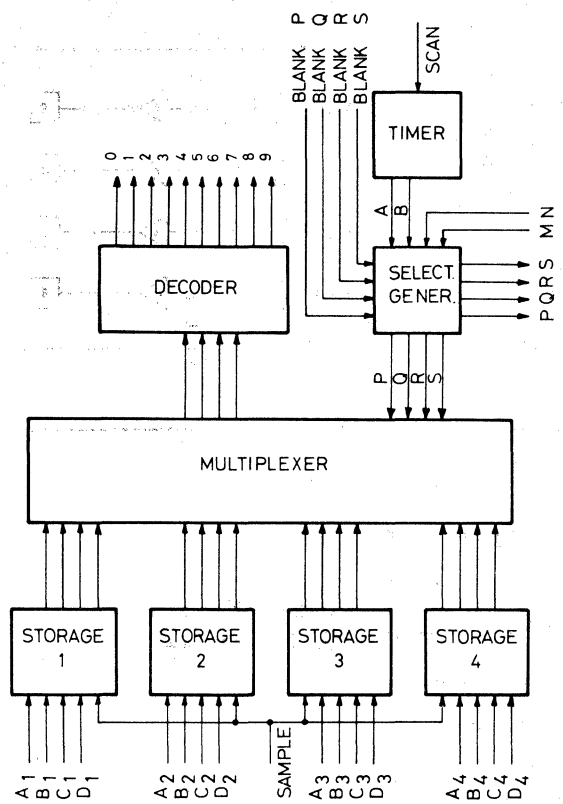

PIN CONNECTION

1	V_{SS}	21	B4
2	"9"	22	B3
3	"8"	23	B2
4	"7"	24	B1
5	"6"	25	A4
6	"5"	26	A3 } LSD
7	"4"	27	A2
8	"3"	28	A1
9	"2"	29	V_{GG}
10	"1"	30	M
11	"0"	31	N
12	SAMPLE	32	P
13	D4	33	Q
14	D3 } MSD	34	R
15	D2	35	S
16	D1	36	BLANK S
17	C4	37	BLANK R
18	C3	38	BLANK Q
19	C2	39	BLANK P
20	C1	40	SCAN

AE70

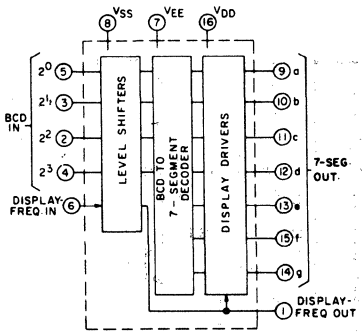

AE71

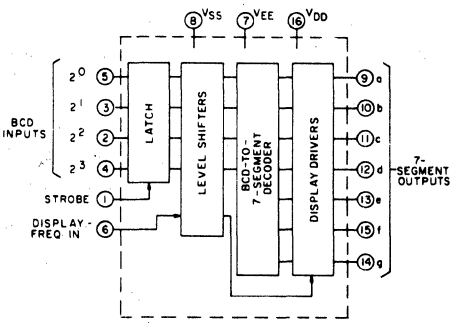

AE74

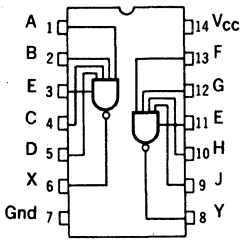

AE75

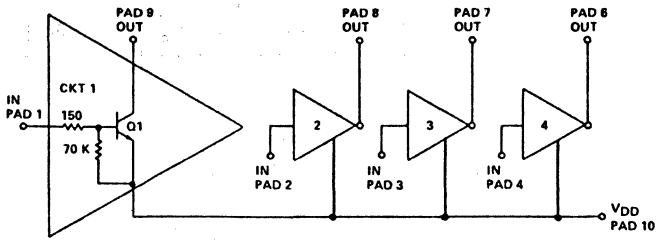

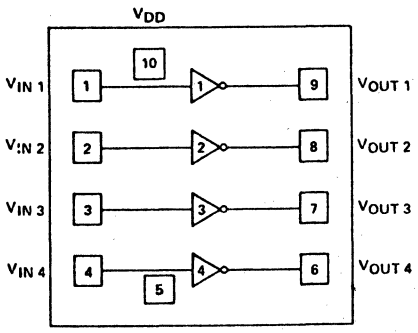

22. LOGIC/BLOCK DRAWINGS

AE76

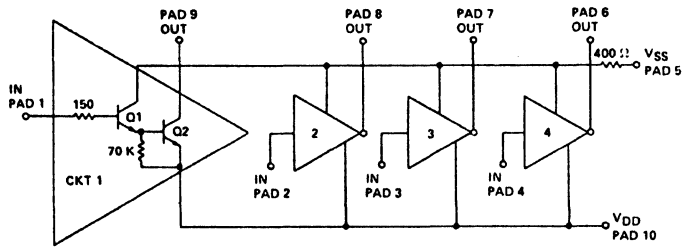

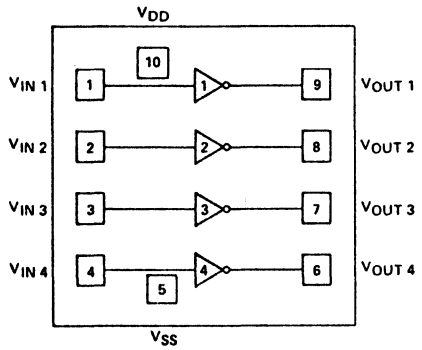

AE85

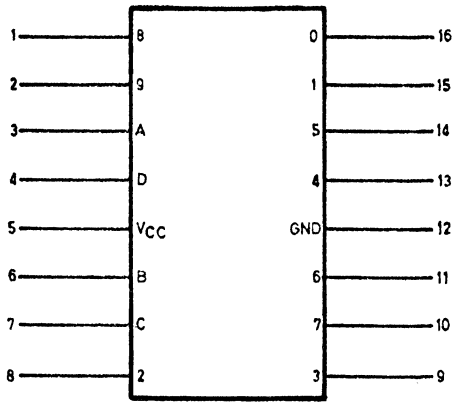

Vcc — Pin 5
Gnd — Pin 12

AE86

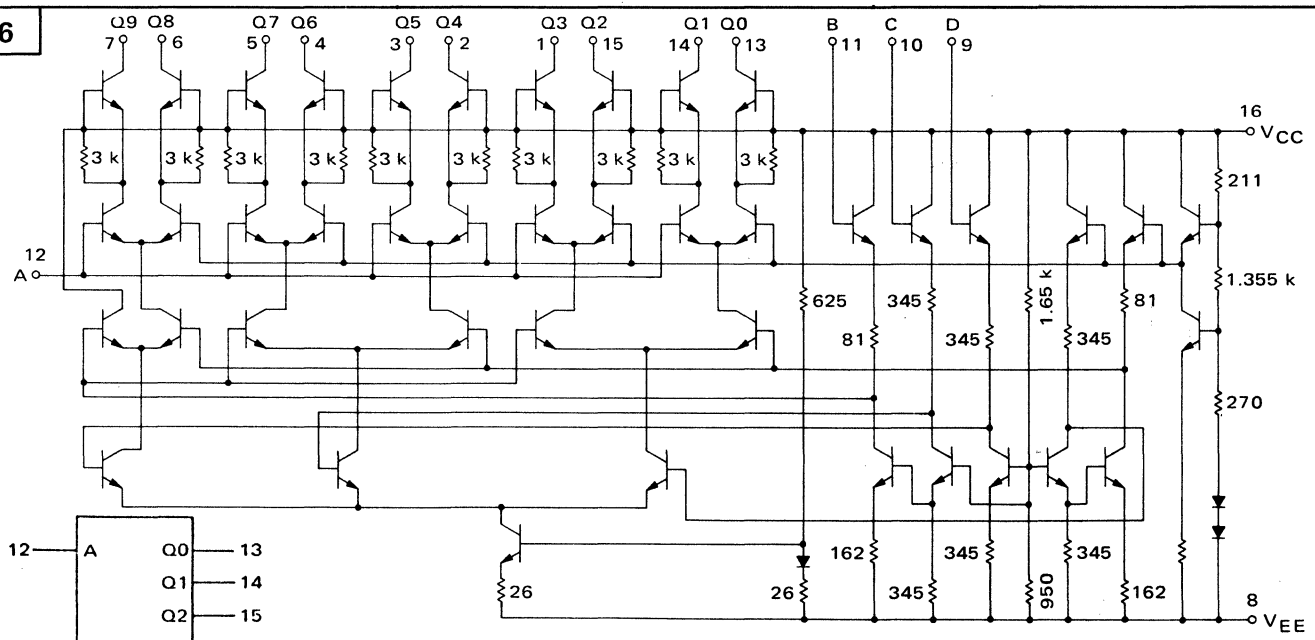

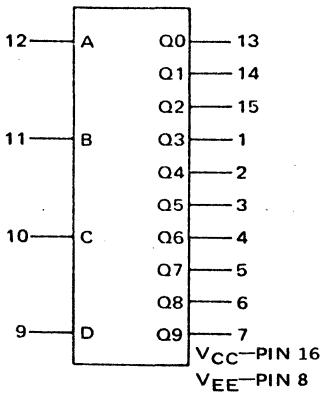

22. LOGIC/BLOCK DRAWINGS

AE90

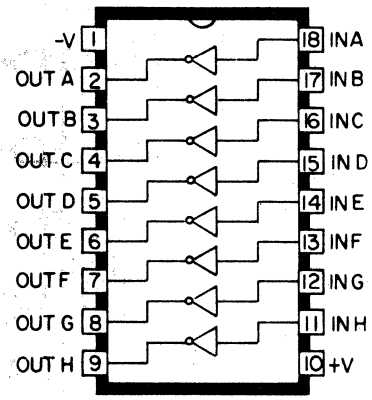

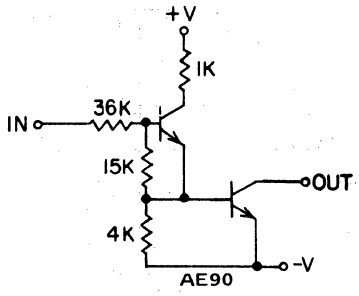

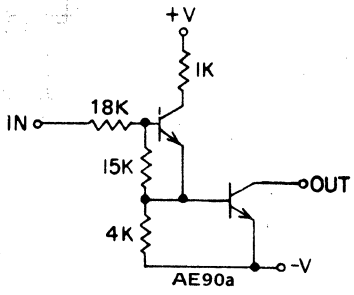

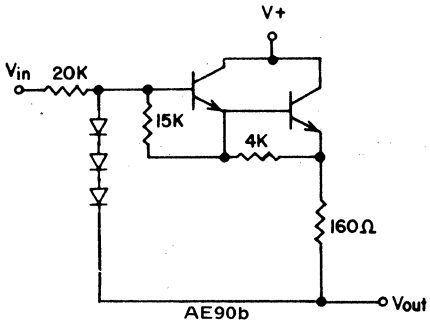

AE91

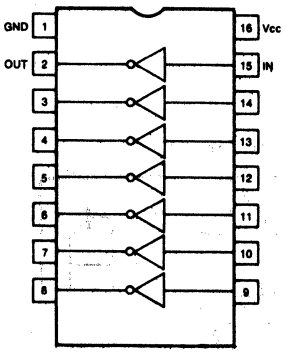

AE92

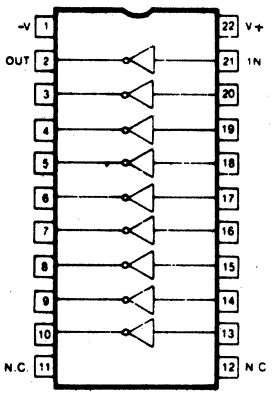

AE93

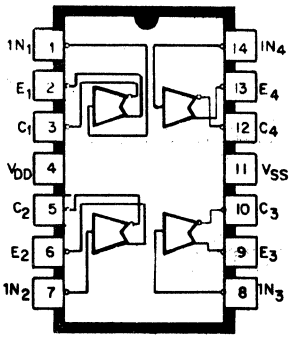

AE94

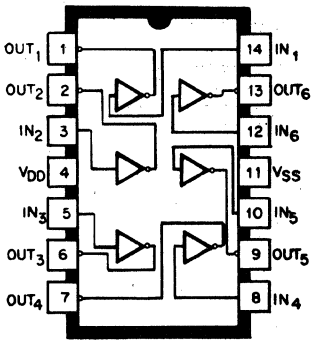

22. LOGIC/BLOCK DRAWINGS

AE95

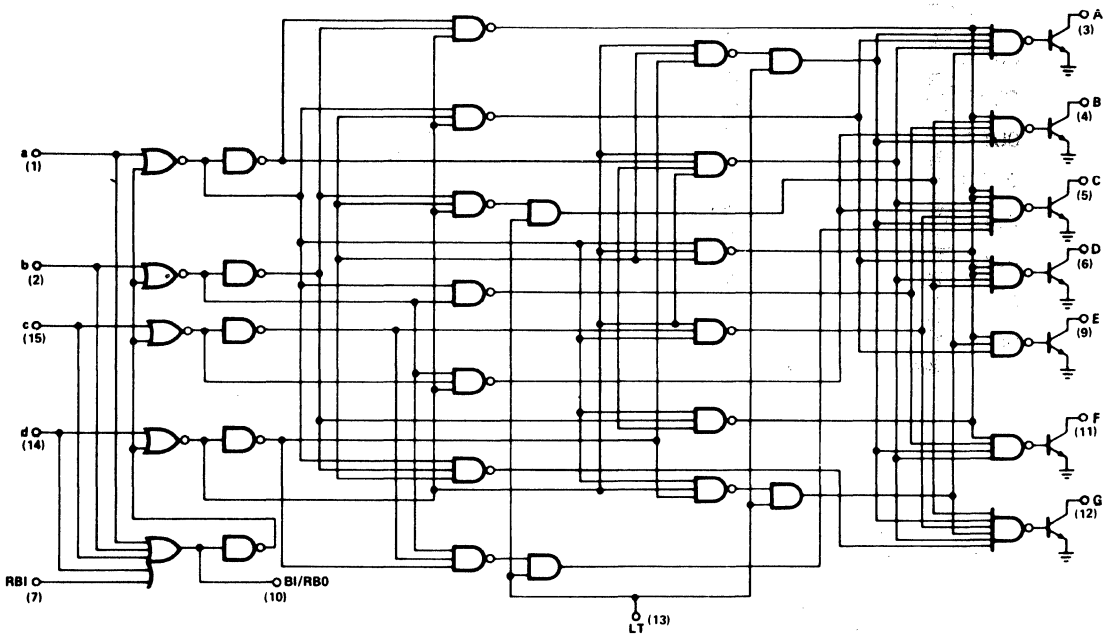

AE95: OUTPUT TRANSISTOR DRIVER IS NAND GATE

AE95a: OUTPUT TRANSISTOR DRIVER IS AND GATE

AE95b- Outputs have resistor pullups.

V_{CC} = (16)
GND = (8)
( ) = Denotes Pin Numbers

AE97

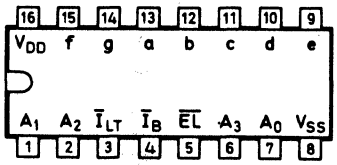

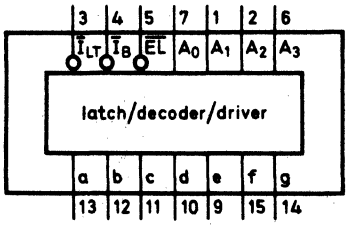

AE101

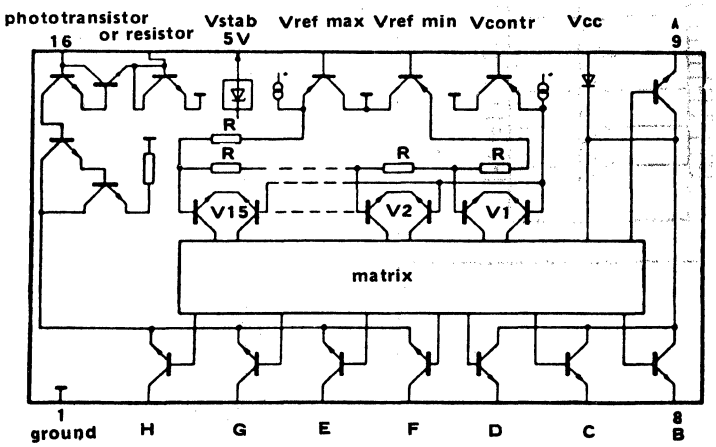

22. LOGIC/BLOCK DRAWINGS

AE108

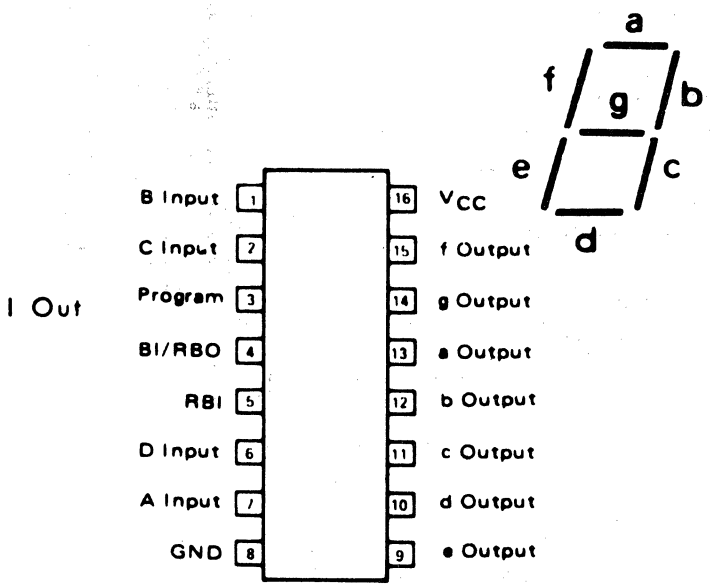

AE111

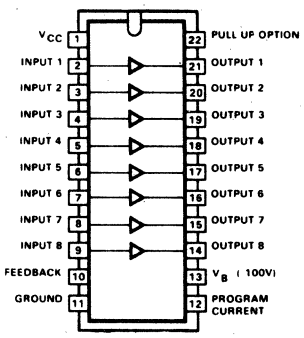

AE111a

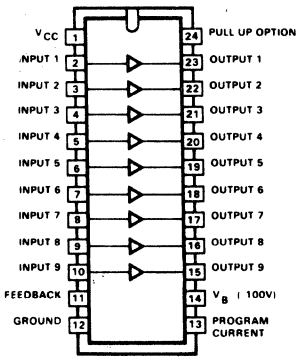

AE111

AE112

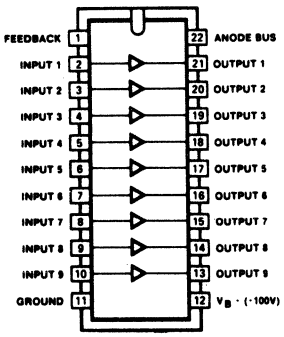

AE112

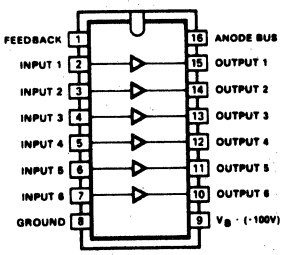

AE112a

AE117

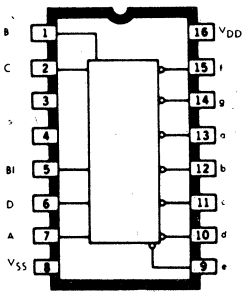

AE131

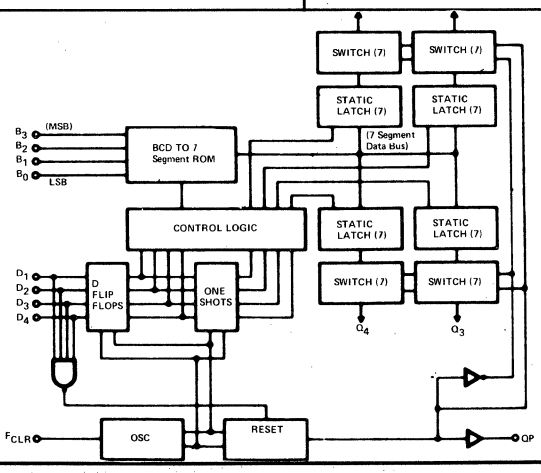

22. LOGIC/BLOCK DRAWINGS

AE133

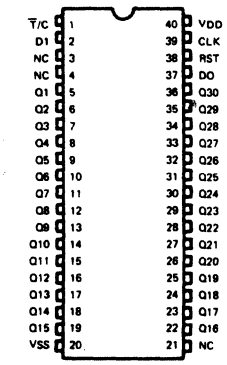

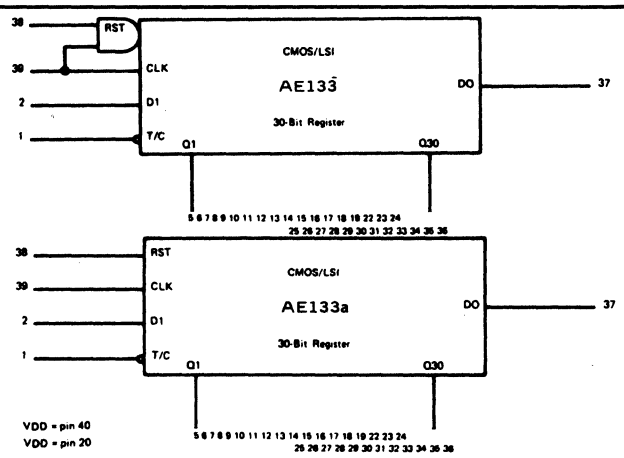

AE134

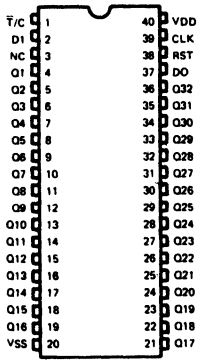

AE135

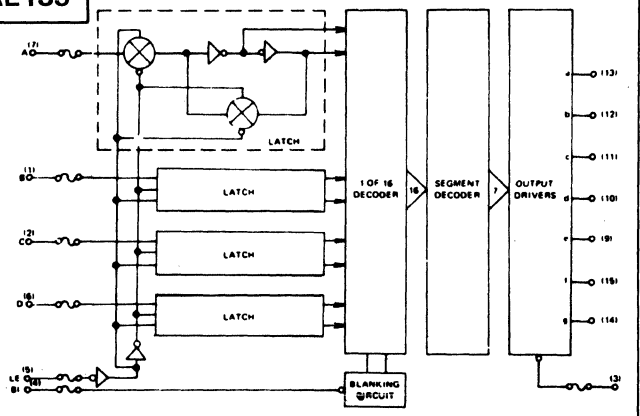

AE136

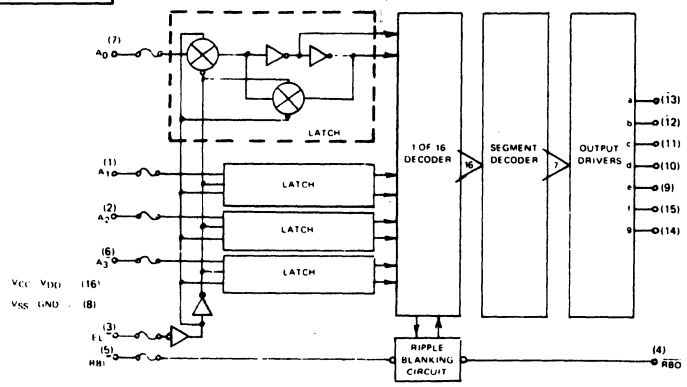

AE139

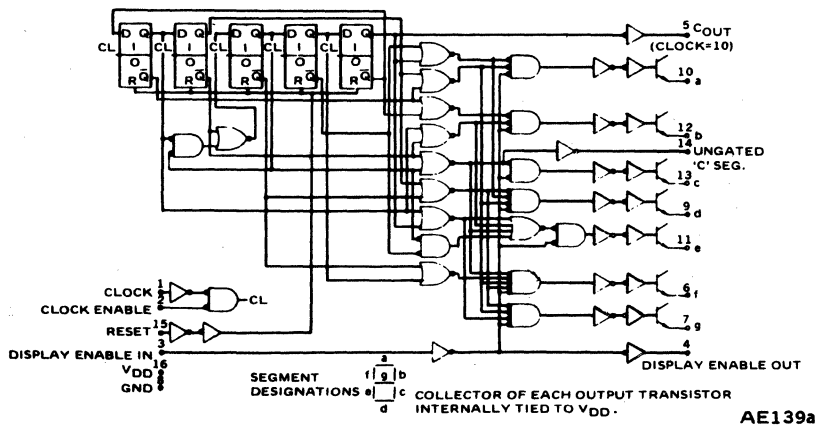

AE139a - No output transistors

AE144

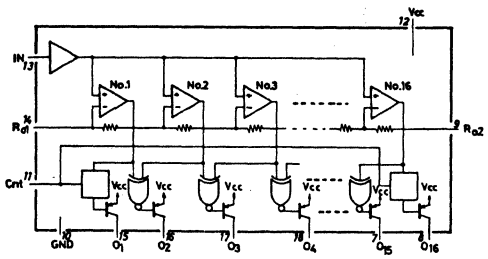

AE156

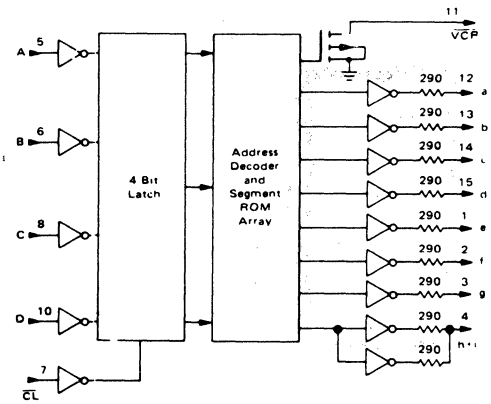

22. LOGIC/BLOCK DRAWINGS

AE160

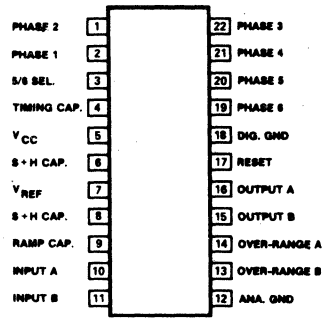

AE165

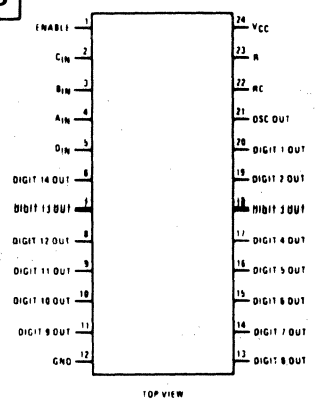

AE166

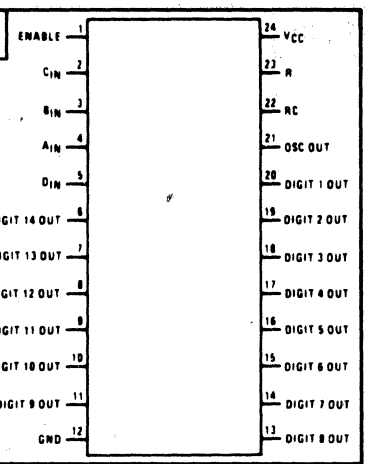

AE172

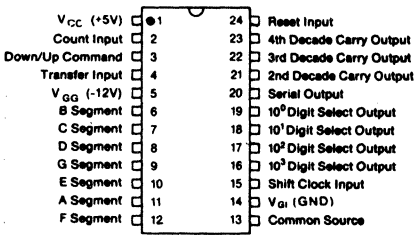

AE172a

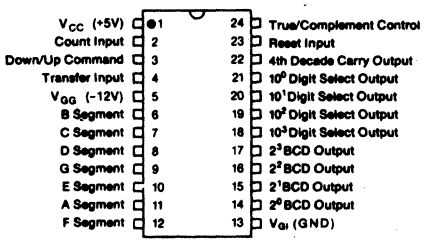

AE172b

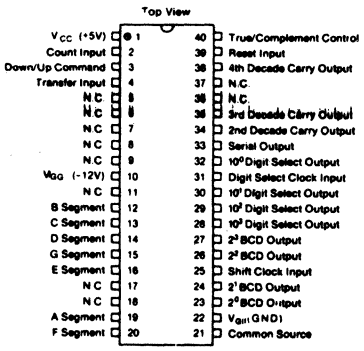

AE172

AE173

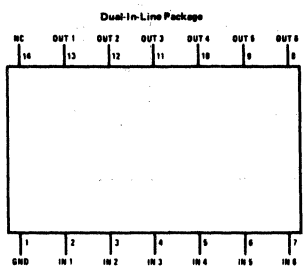

AE176

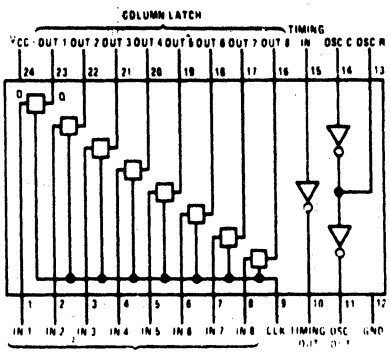

AE176c

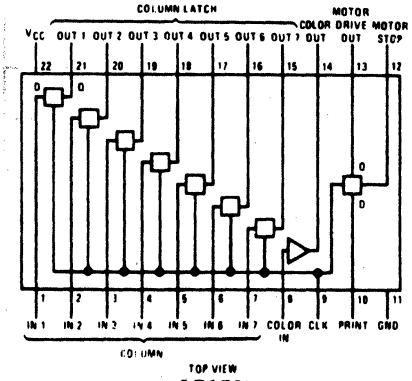

AE176b

22. LOGIC/BLOCK DRAWINGS

AE178

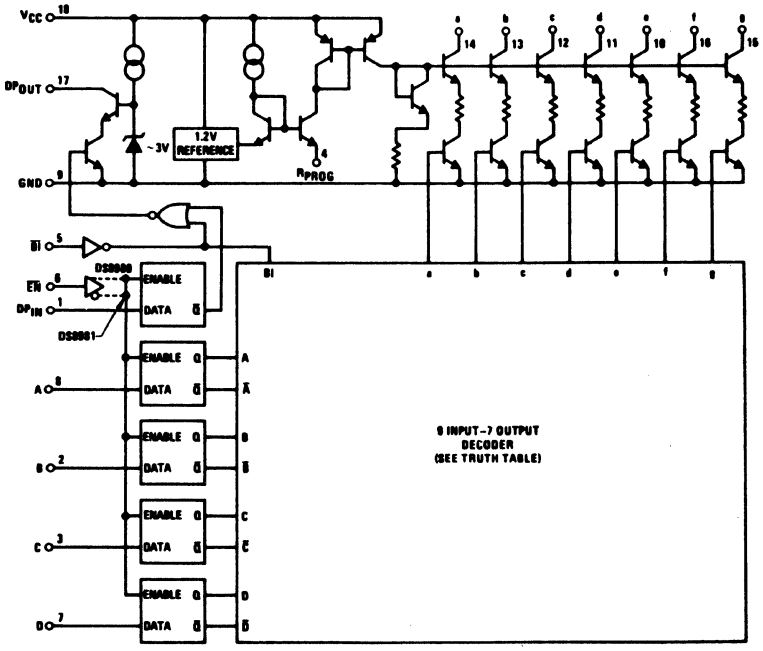

AE180

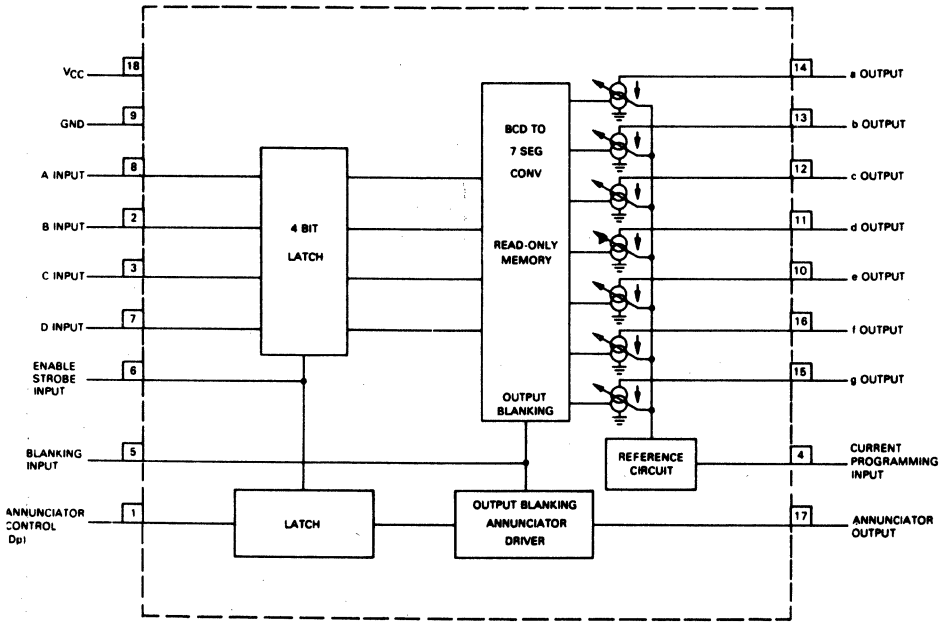

AE183

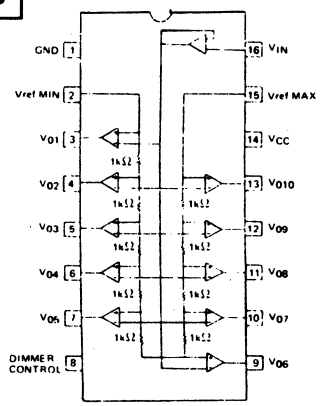

22. LOGIC/BLOCK DRAWINGS

AE192

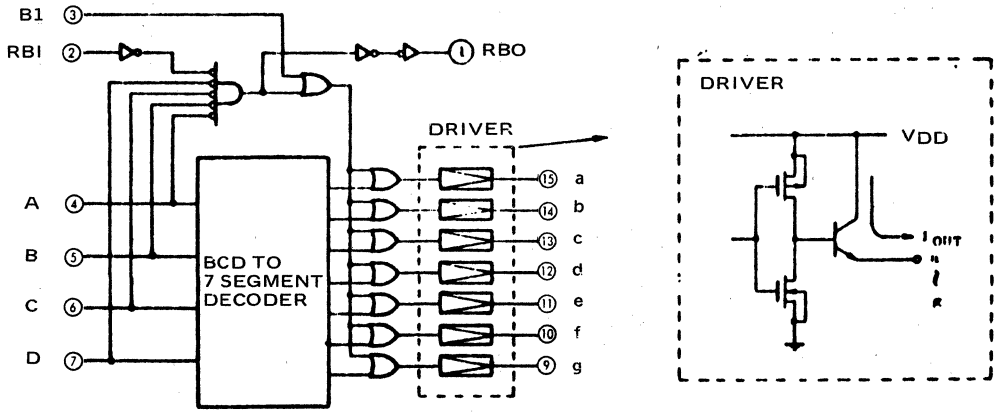

AE195

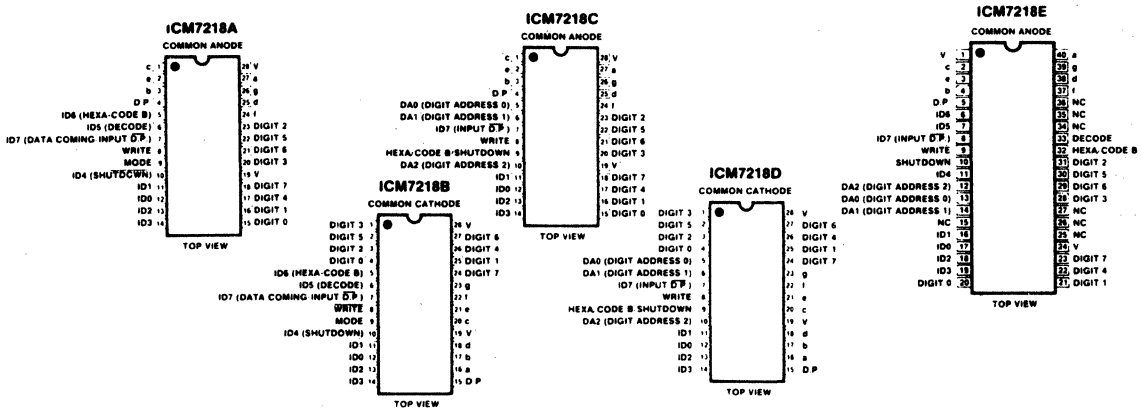

AE198

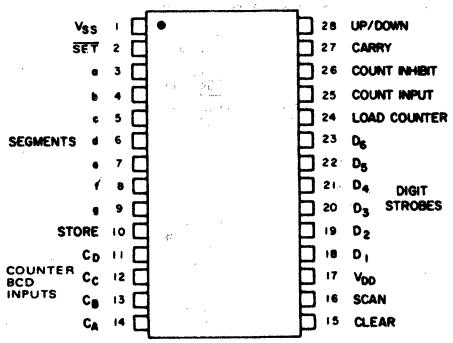

AE199

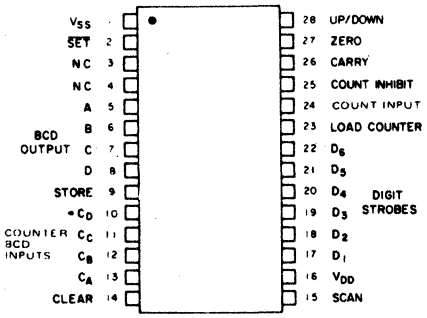

AE202

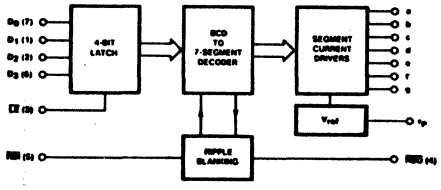

22. LOGIC/BLOCK DRAWINGS

AE226

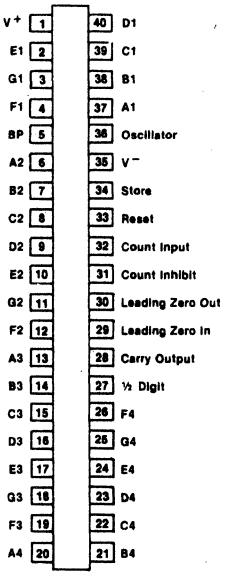

AE227

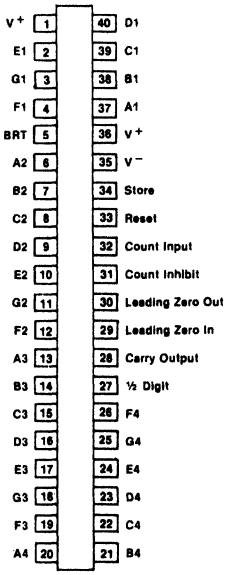

AE265

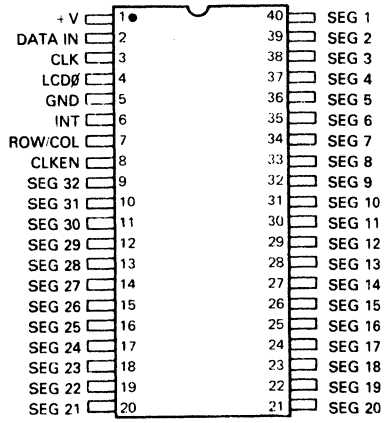

AE270

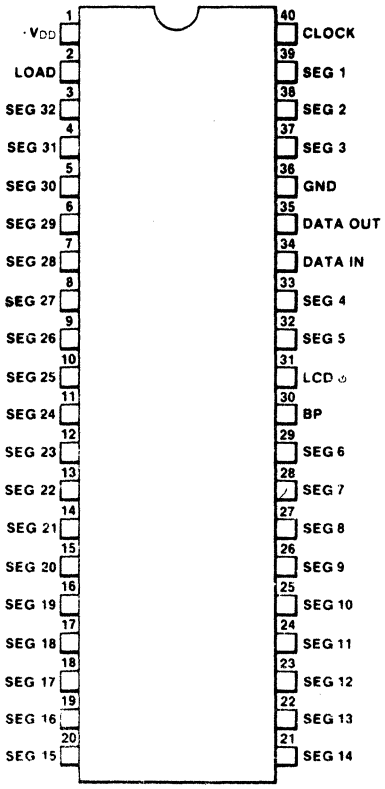

AE276

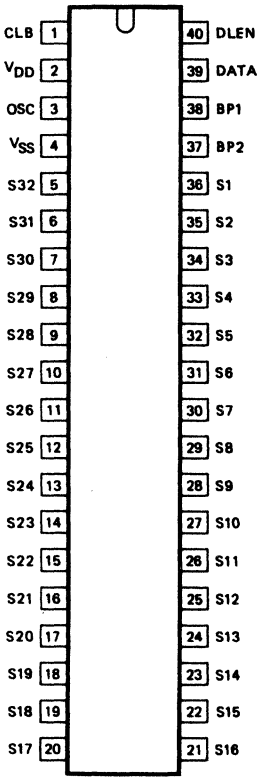

AE276a

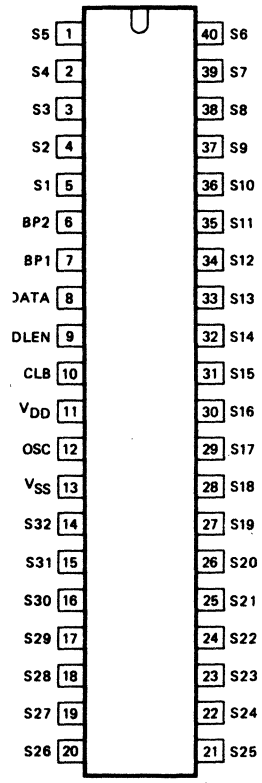

22. LOGIC/BLOCK DRAWINGS

AE283a

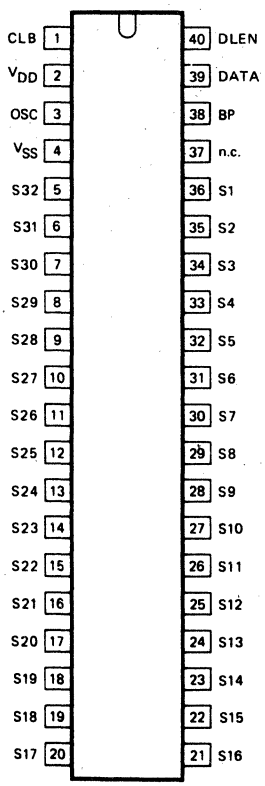

AF4

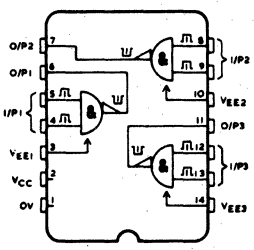

AF5

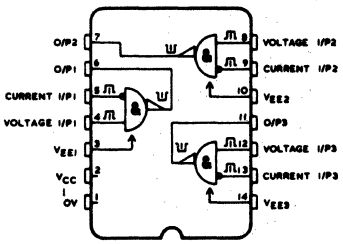

AF6

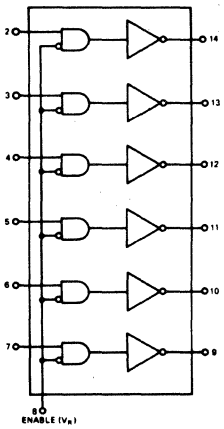

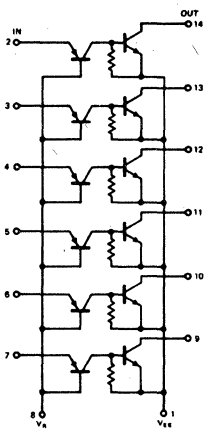

AF13

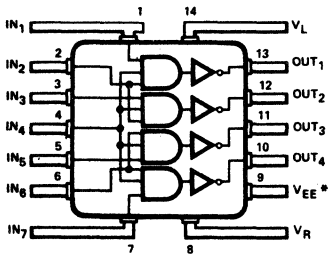

AF13

AF14

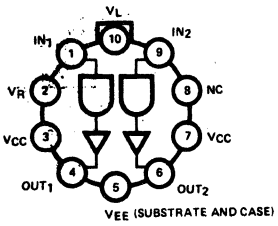

AF14

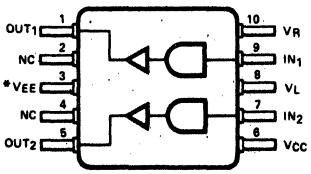

AF14a

AF15

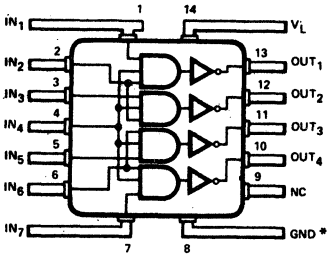

AF15

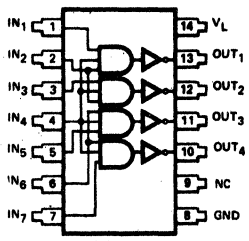

AF15a

AF16

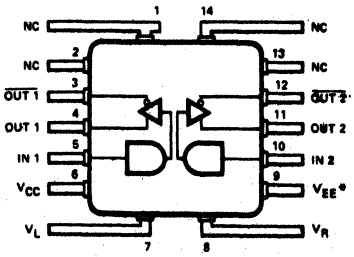

AF16

22. LOGIC/BLOCK DRAWINGS

AF21

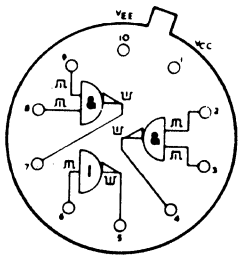

AF22

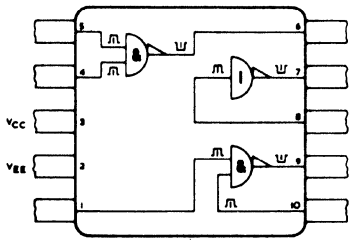

AF23

Pin	Function
1	Ch. 1 Input
2	Ch. 1 Output
3	$-V_{EE}$
4	Ch. 2 Output
5	Ch. 2 Input
6	Inhibit Input
7	V_{SS} (GND)
8	Ch. 3 Input
9	Ch. 3 Output
10	$-V_{EE}$
11	Ch. 4 Output
12	Ch. 4 Input
13	Open
14	$+V_{DD}$

22. LOGIC/BLOCK DRAWINGS

BA5

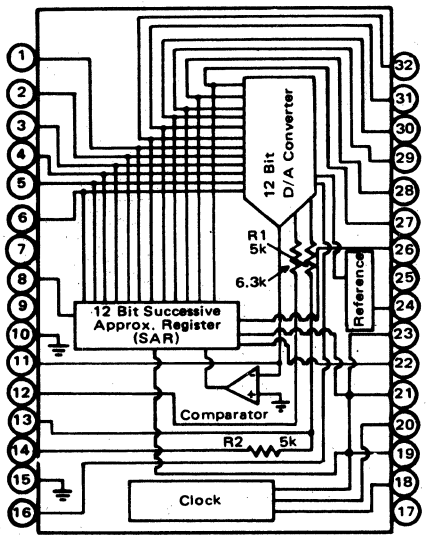

PIN CONNECTIONS

1. Bit 6	32. Bit 7
2. Bit 5	31. Bit 8
3. Bit 4	30. Bit 9
4. Bit 3	29. Bit 10 (LSB-10 Bits)
5. Bit 2	28. Bit 11
6. Bit 1 (MSB)	27. Bit 12 (LSB-12 Bits)
7. +5V Analog	26. Serial out
8. $\overline{\text{Bit 1 (MSB)}}$	25. -15V
9. +5V Digital	24. Ref. out (+6.2V)
10. Digital Common	23. Clock out
11. Comparator IN	22. Status
12. Bipolar Offset	21. Short Cycle
13. R1 10V Range	20. Clock Inhibit
14. R2 20V Range	19. External Clock
15. Analog Common	18. Convert Command
16. Gain Adjust	17. +15V

BA29

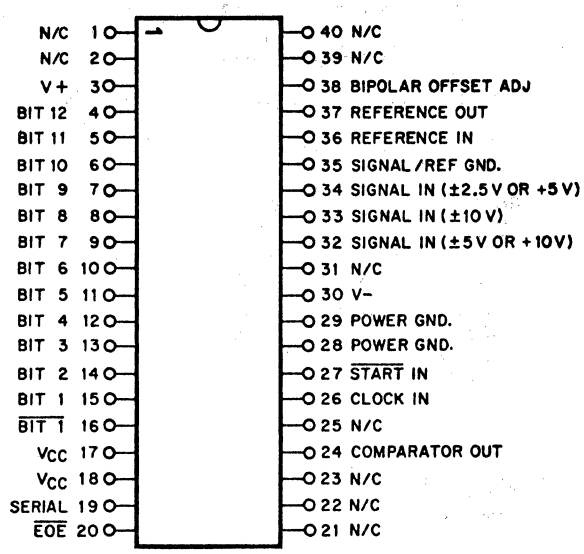

BA37

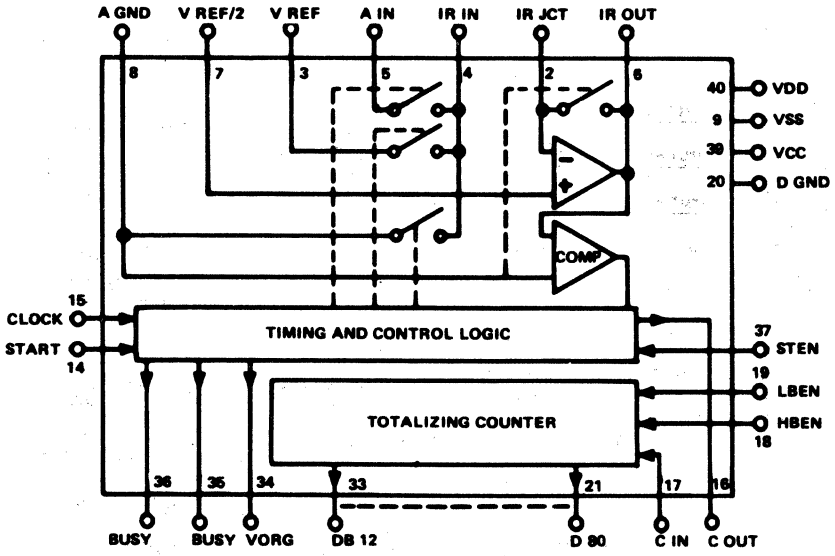

22. LOGIC/BLOCK DRAWINGS

BA48

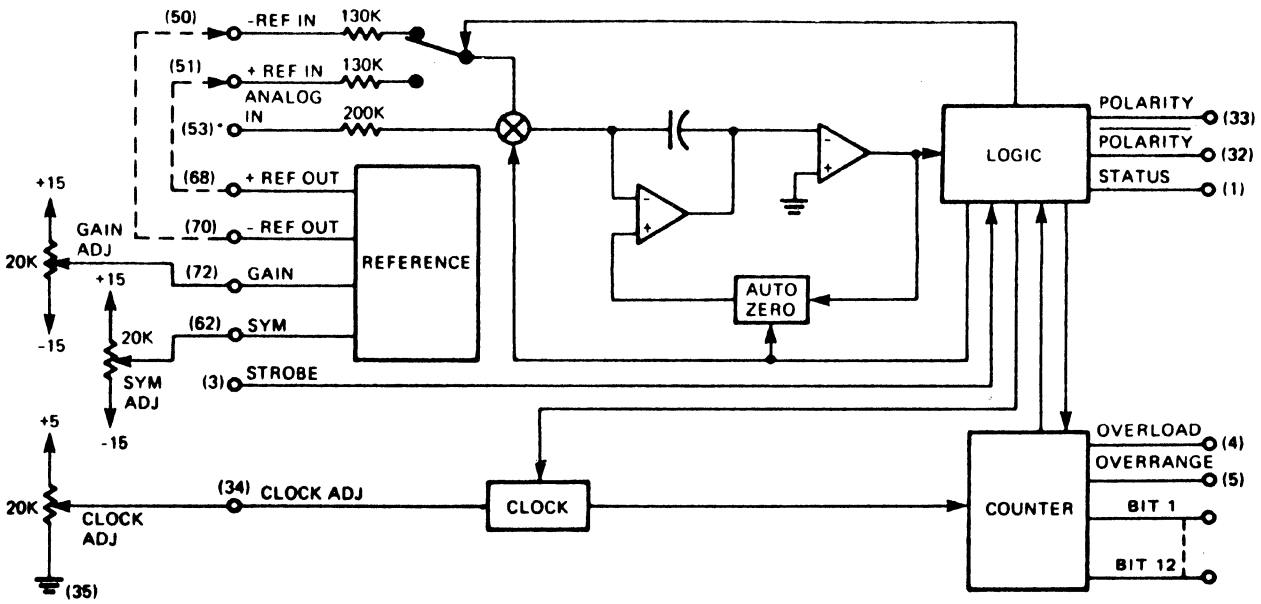

BA50

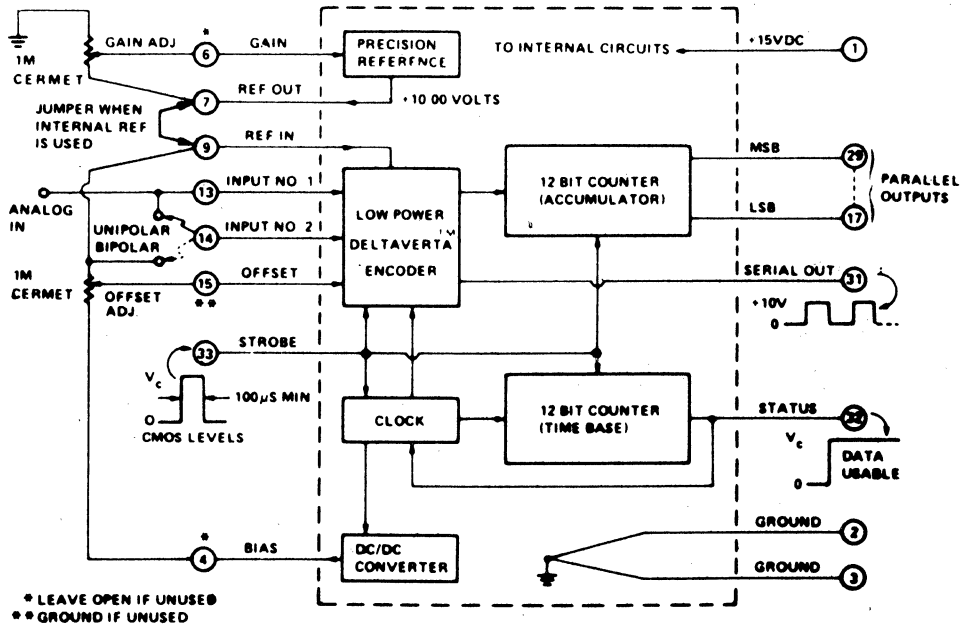

22. LOGIC/BLOCK DRAWINGS

BA72

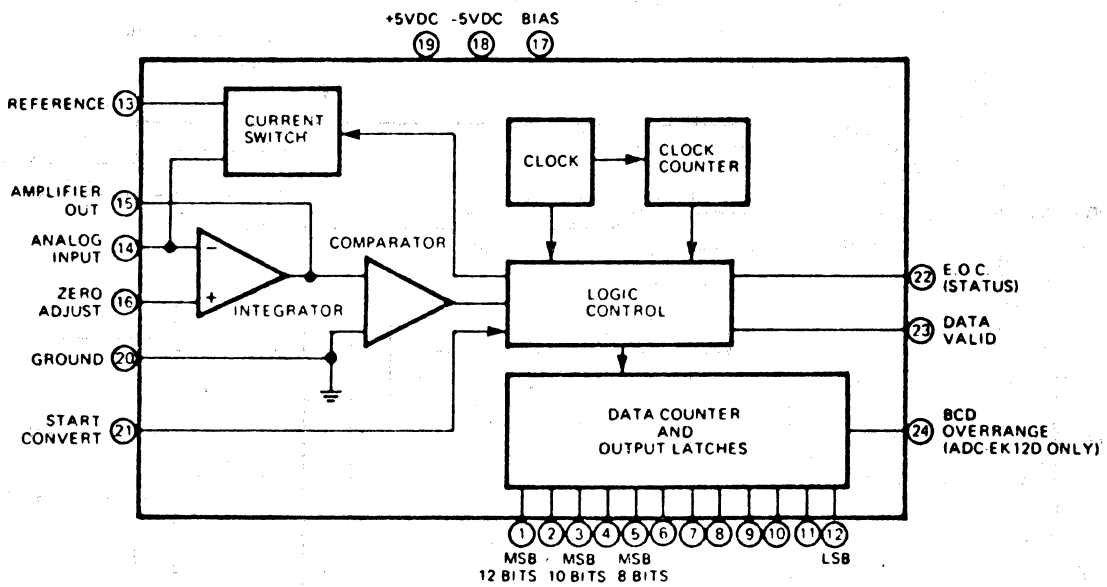

BA75

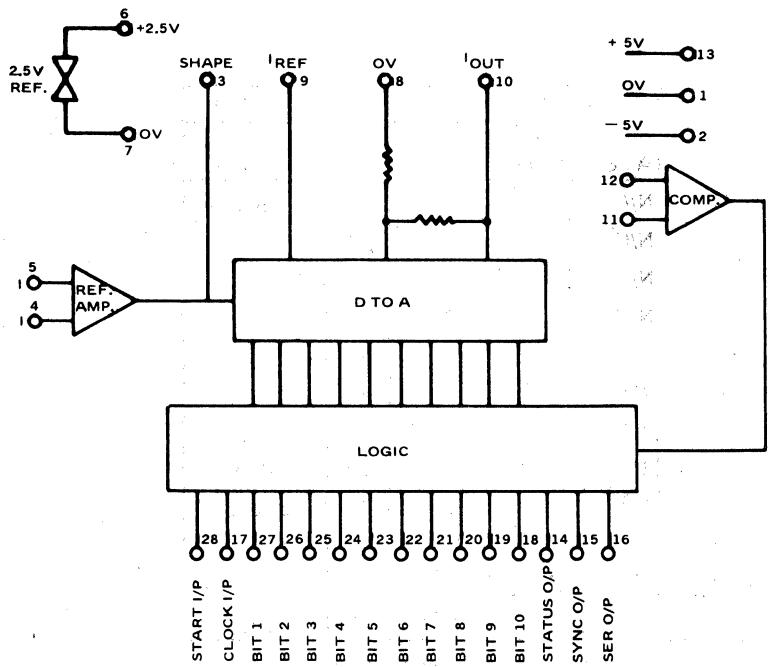

22. LOGIC/BLOCK DRAWINGS

BA78

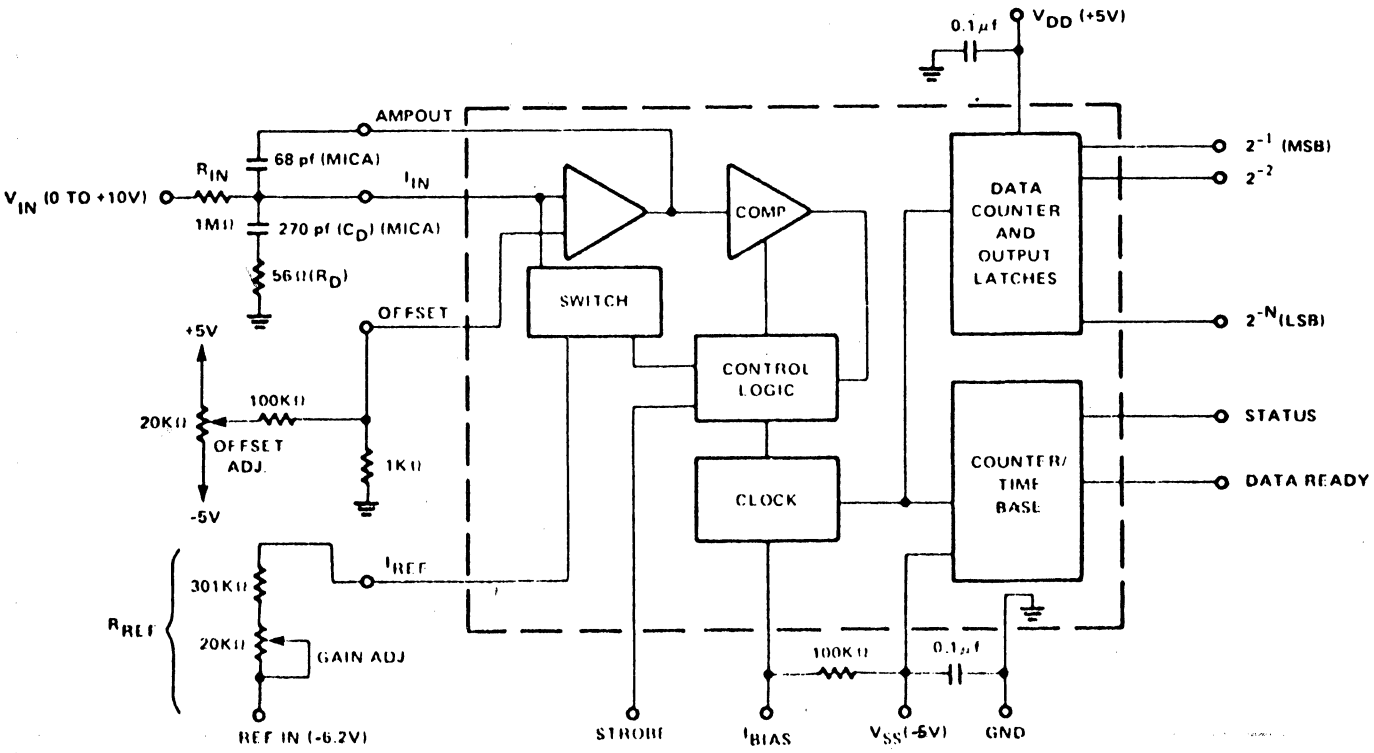

Pin	FUNCTION ADC BA78	BA78a	BA78b	Pin	FUNCTION All Units
1	N/C	N/C	2^{-1}	13	I_{Ref}
2	N/C	N/C	2^{-2}	14	I in
3	N/C	2^{-1}	2^{-3}	15	Amp Out
4	N/C	2^{-2}	2^{-4}	16	Offset
5	2^{-1}	2^{-3}	2^{-5}	17	I_{Bias}
6	2^{-2}	2^{-4}	2^{-6}	18	V_{ss}
7	2^{-3}	2^{-5}	2^{-7}	19	V_{DD}
8	2^{-4}	2^{-6}	2^{-8}	20	GND
9	2^{-5}	2^{-7}	2^{-9}	21	Strobe
10	2^{-6}	2^{-8}	2^{-10}	22	Status
11	2^{-7}	2^{-9}	2^{-11}	23	Data Ready
12	2^{-8}	2^{-10}	2^{-12}	24	N/C

NOTE: N/C = Make no connection

22. LOGIC/BLOCK DRAWINGS

BA91

PIN	FUNCTION	PIN	FUNCTION
1	GND.	41	+5V POWER SUPPLY
2	GND.	42	+5V POWER SUPPLY
3	12V POWER SUPPLY	43	+12V POWER SUPPLY
4	12V POWER SUPPLY	44	+12V POWER SUPPLY
5	COSINE CH. 0 LOW	45	N C
6	HIGH	46	N C
7	SINE CH 0 HIGH	47	MSB
8	LOW	48	BIT 2
9	COSINE CH. 1 LOW	49	BIT 3
10	HIGH	50	BIT 4
11	SINE CH. 1 HIGH	51	BIT 5
12	LOW	52	BIT 6
13	COSINE CH. 2 LOW	53	BIT 7
14	HIGH	54	BIT 8
15	SINE CH. 2 HIGH	55	BIT 9
16	LOW	56	BIT 10
17	COSINE CH. 3 LOW	57	BIT 11
18	HIGH	58	BIT 12
19	SINE CH. 3 HIGH	59	BIT 13
20	LOW	60	BIT 14 LSB
21	COSINE CH. 4 LOW	61	N/C
22	HIGH	62	CHANNEL ADDRESS INPUT LSB (1)
23	SINE CH. 4 HIGH	63	CHANNEL ADDRESS INPUT BIT 2 (2)
24	LOW	64	CHANNEL ADDRESS INPUT MSB (4)
25	COSINE CH 5 LOW	65	CHANNEL ADDRESS OUTPUT MSB (4)
26	HIGH	66	CHANNEL ADDRESS OUTPUT BIT 2 (2)
27	SINE CH 5 HIGH	67	CHANNEL ADDRESS OUTPUT LSB (1)
28	LOW	68	N C
29	COSINE CH. 6 LOW	69	N C
30	HIGH	70	CLEAR INPUT
31	SINE CH 6 HIGH	71	STROBE OUTPUT
32	LOW	72	LOAD INPUT
33	COSINE CH. 7 LOW	73	RESET INPUT
34	HIGH	74	ENABLE OUTPUT
35	SINE CH. 7 HIGH	75	INTERRUPT INPUT
36	LOW	76	N C
37	N C	77	N C
38	REFERENCE GND.	78	N C
39	HIGH	79	N C
40	5V POWER SUPPLY	80	N C

BA98

PIN	FUNCTION	PIN	FUNCTION
1	BIT 12	21	BIT 8
2		22	−15VDC
3		23	−15VDC
4	CLOCK OUT	24	BIT 6
5	BIT 11	25	BIT 5
6	BIT 10	26	+5VDC
7		27	+5VDC
8		28	−5VDC
9		29	−5VDC
10		30	BIT 4
11		31	BIT 3
12		32	BIT 2
13	DATA READY	33	BIT 1 (MSB)
14	+15VDC	34	START CONV IN
15	+15 VDC	35	$\overline{\text{MSB}}$
16	GND	36	DATA READY (DELAYED)
17	GND	37	
18	GND	38	
19	GND	39	ANA RETURN (SHIELD)
20	BIT 7	40	ANA IN
		41	ANA RETURN (SHIELD)

BA105

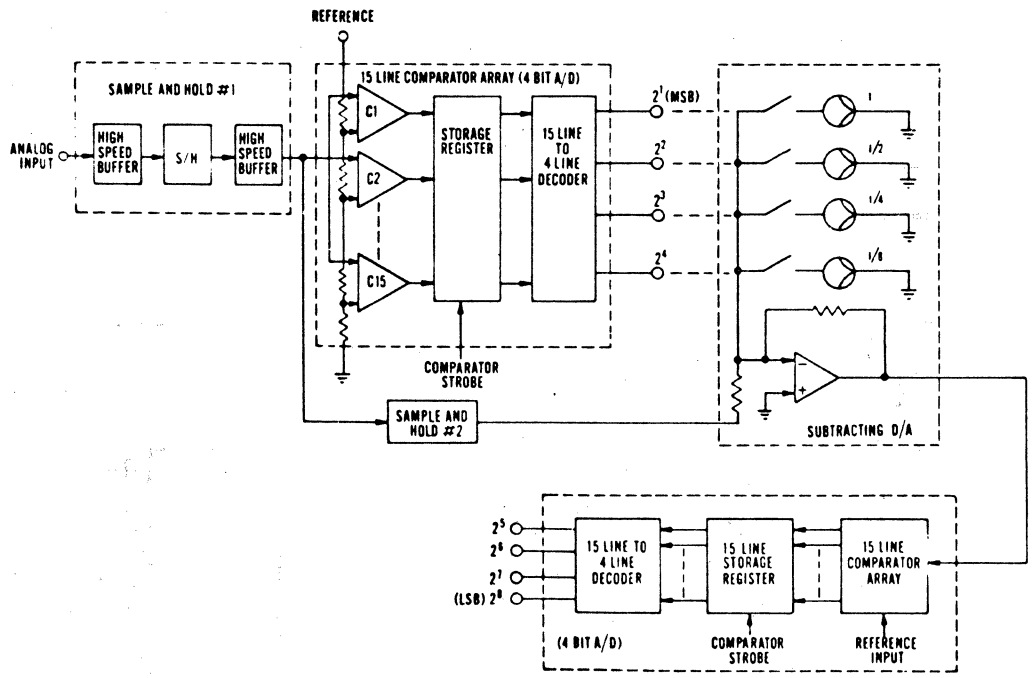

Connector Pin	Signal
1, 2, 3, 4, A	Power Ground
13	+5 volt in
D	+15 volt in
L	−15 volt in
H	Analog in
F	Analog return
19	Trigger in
20	Data ready
R	2^1 out
S	2^2 out
T	2^3 out
U	2^4 out
V	2^5 out
W	2^6 out
X	2^7 out
Y	2^8 out
21	Output Register Strobe
22	Test mode
J	Reference Out Lo
K	Reference Out Hi

22. LOGIC/BLOCK DRAWINGS

BA106

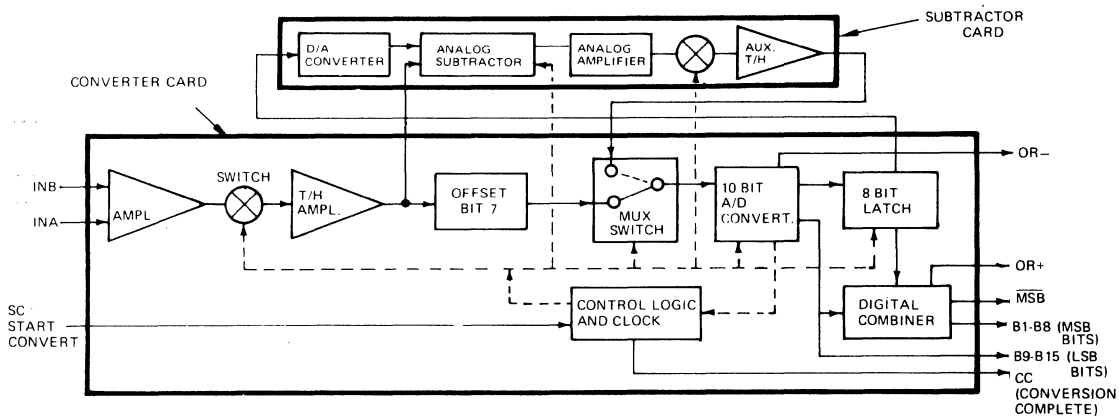

SUBTRACTOR CARD

PIN	DESIG	FUNCTION	PIN	DESIG	FUNCTION
1	AUX T/H OUT	Output from Aux T/H	22	–15V	Card Power Interconnection
2	AUX T/H SWITCH	Pulse In from Control Logic	23		
3			24	+10V Ref.	Reference Out
4			25	–15V	External Power In
5			26	+5V	External Power In and Card Interconnection
6			27		
7			28	+15V	External Power In
8			29		
9			30	AG	External Analog GND and Card Interconnection
10			31	AG	Analog GND and Card Interconnection
11			32		
12			33		
13			34	A5	Bit In
14			35	A1	MSB Bit In
15	+15V	Card Power Interconnection	36	A6	Bit In
16	Subtr. IN	Input from T/H	37	A2	Bit In
17			38	A7	Bit In
18	PG	External Power GND and Card Interconnection	39	A3	Bit In
19			40	A8	Bit In
20			41	A4	Bit In
21					

NOTES:
See Card Interconnect Diagram and Notes regarding power and ground connections.

CONVERTER CARD

PIN	DESIG	FUNCTION	PIN	DESIG	FUNCTION
1	A1	MSB Bit Out	22	–15V	Power In Transfer
2	B4	Bit Out	23	B12	Bit Out
3	OR+	+Over Range Flag	24	B13	Bit Out
4	A2	Bit Out	25	B9	Bit Out
5	B1	MSB Bit Out	26	+5V	Power In Transfer
6	A3	Bit Out	27	$\overline{MSB}$	$\overline{MSB}$ Bit Out
7	B2*	Bit Out	28	B14	Bit Out
8	A4	Bit Out	29	B15	LSB Bit Out
9	B3	Bit Out	30	OR–	–Over Range Flag
10	B5	Bit Out	31	T/H OUT	Output to Subtractor
11	A5	Bit Out	32	AG	Analog GND Transfer
12	A6	Bit Out	33	+In	T/H ANA Input
13	B6	Bit Out	34	AG	Analog GND Transfer
14	A8	LSB Bit Out	35	Remote Sense	T/H Feedback
15	+15V	Power In Transfer	36	–In	T/H ANA Input
16	B8	Bit Out	37		
17	A7	Bit Out	38	MUX In	Input from AUX T/H
18	PG	Power GND Transfer	39	AUX T/H Control Pulse	Pulse Out to Control AUX T/H
19	B7	Bit Out	40	CC	Conversion Complete (Out)
20	B10	Bit Out	41	SC	Start Conversion (In)
21	B11	Bit Out			

NOTES:
Bits A1–A8 from first conversion are not system output.
Bits B1–B15 and $\overline{MSB}$ are final digital outputs.

BA123

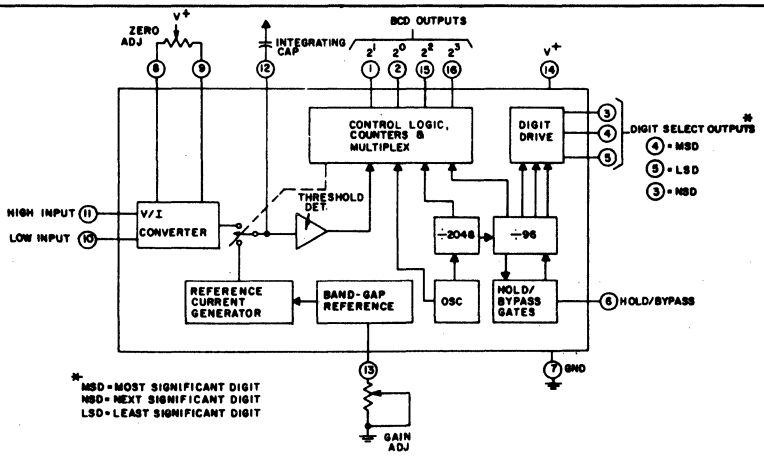

BA128

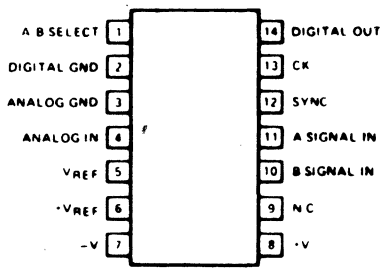

22. LOGIC/BLOCK DRAWINGS

BA143

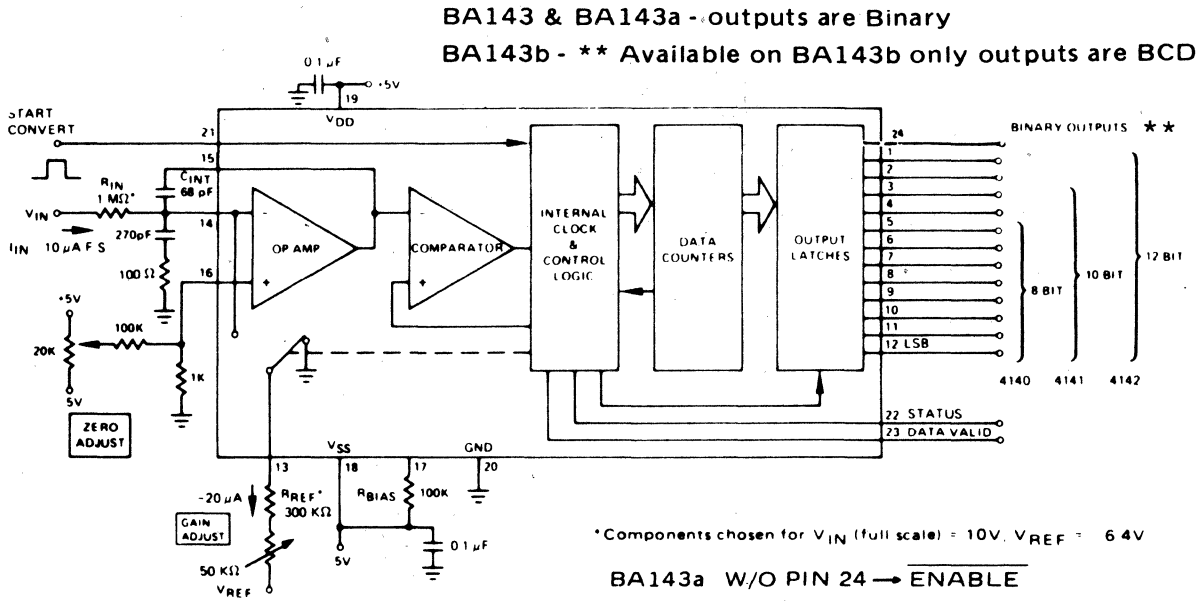

BA146

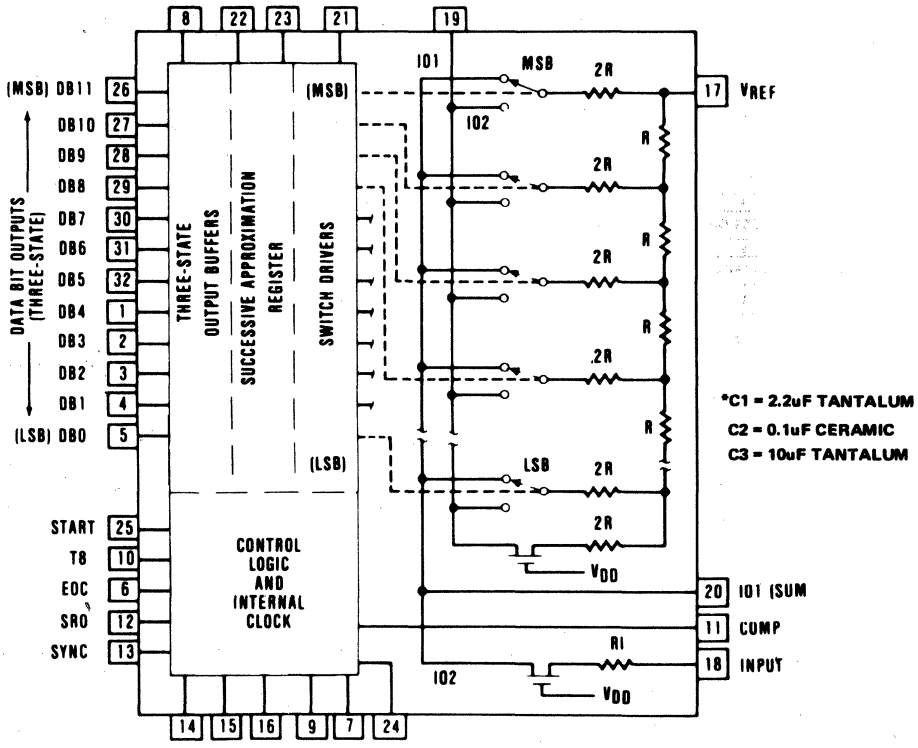

22. LOGIC/BLOCK DRAWINGS

BA147

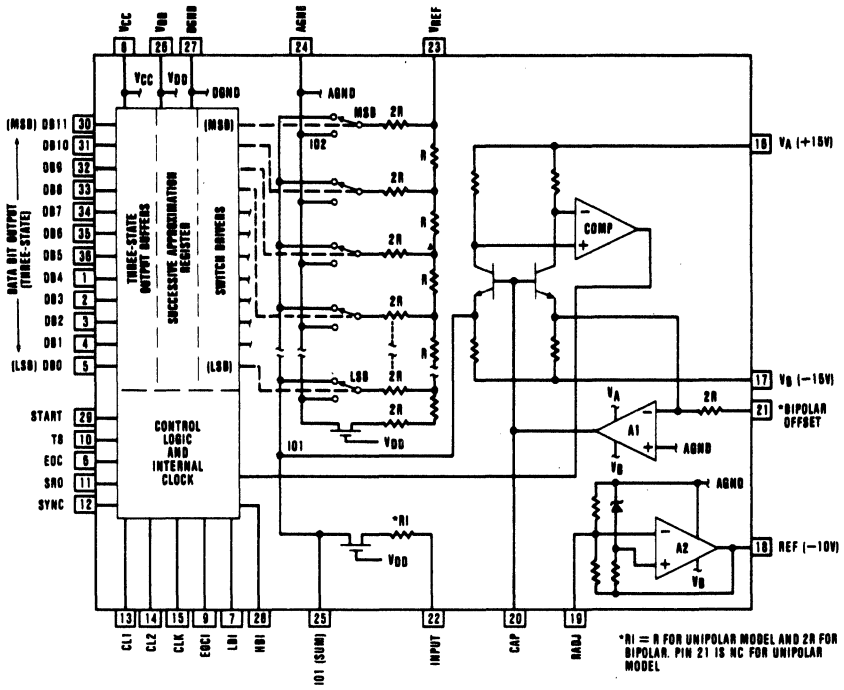

BA148

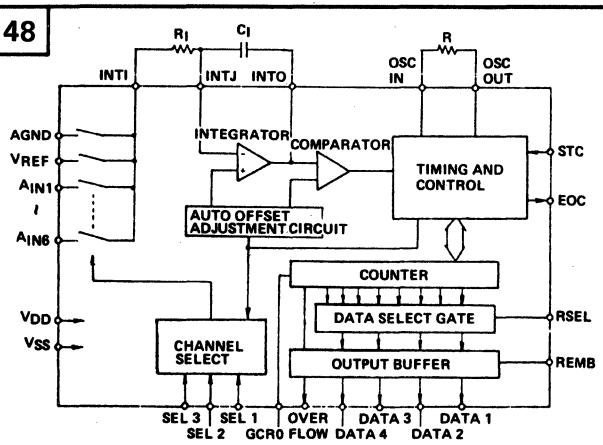

BA149

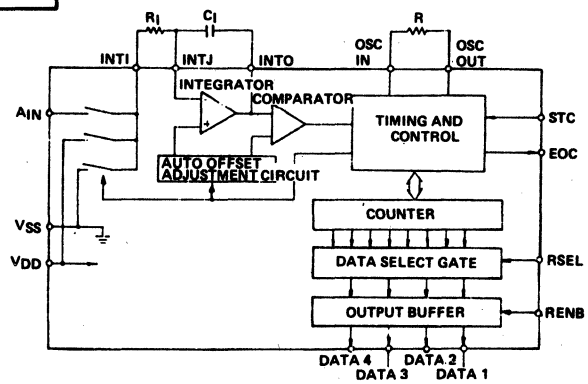

BA153

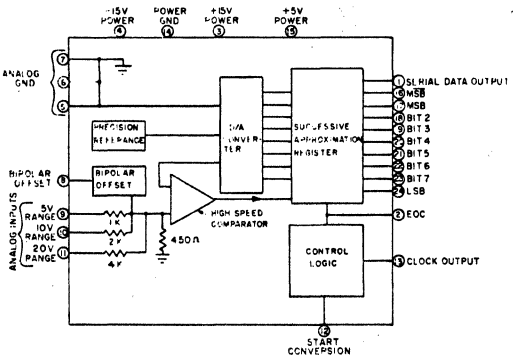

BA163

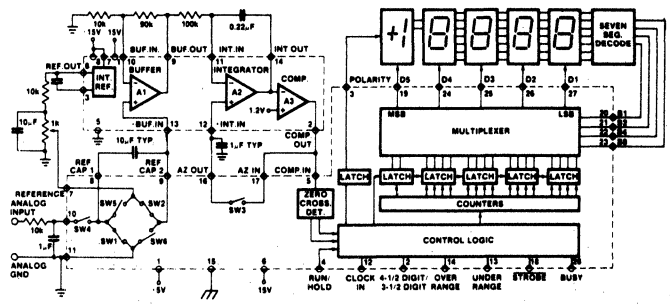

22. LOGIC/BLOCK DRAWINGS

BA165

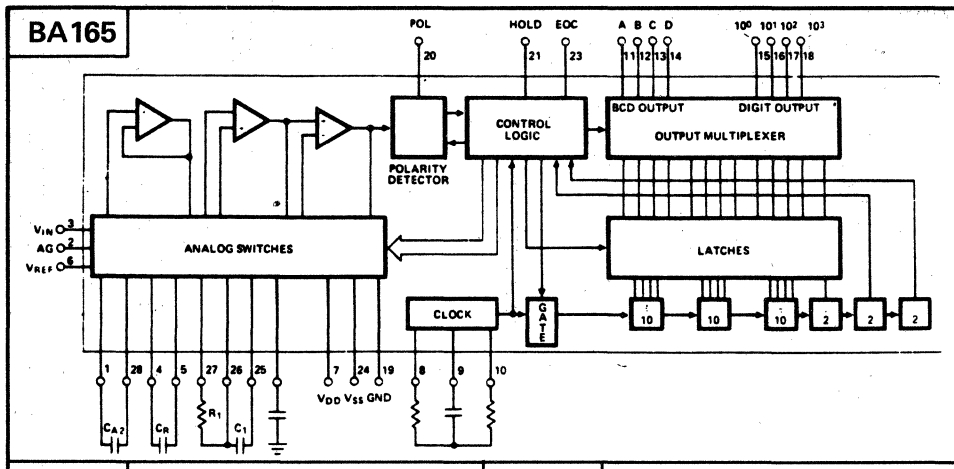

BA168

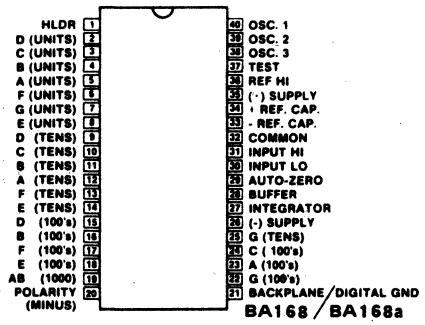

BA186

*3 State Control
*Applies to BA18ba only

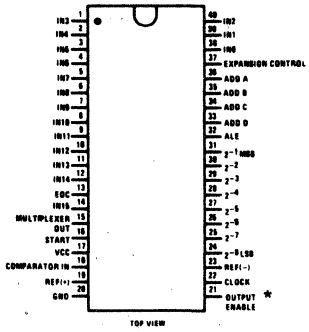

BA201

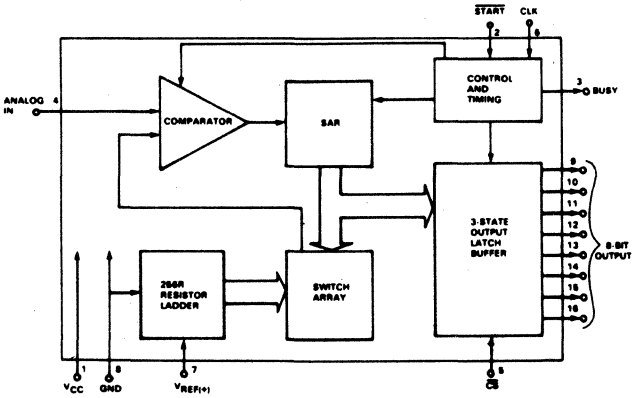

BA215

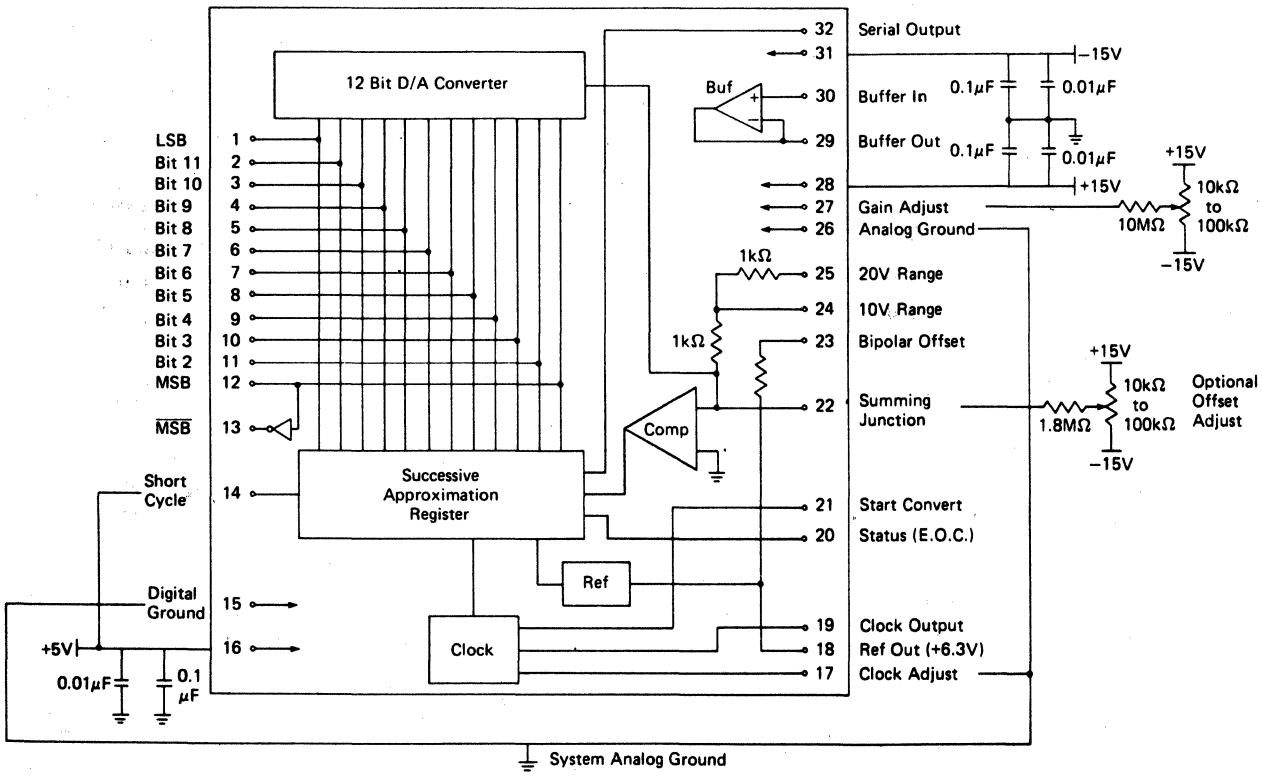

22. LOGIC/BLOCK DRAWINGS

BA224

PIN	FUNCTION
1	RANGE CONTROL
2	GROUND
3	V_{EE}
4	OUTPUT
5	BIT 1 IN (MSB)
6	BIT 2 IN
7	BIT 3 IN
8	BIT 4 IN
9	BIT 5 IN
10	BIT 6 IN
11	BIT 7 IN
12	BIT 8 IN (LSB)
13	Vcc
14	+ REFERENCE
15	− REFERENCE
16	COMPENSATION

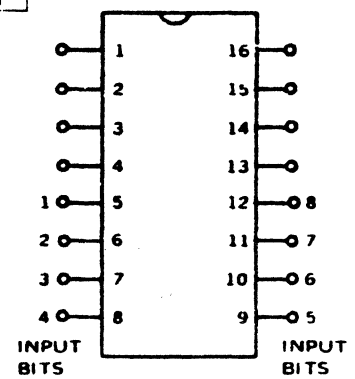

BA236

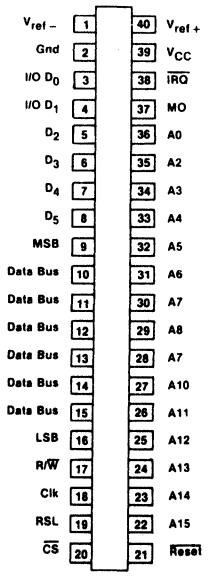

BB1

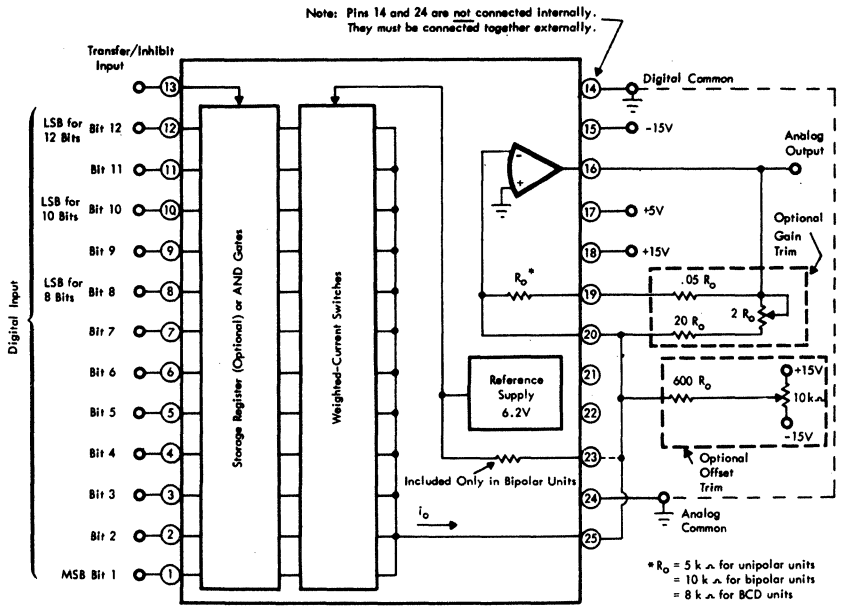

Note:
Bit 8 is the LSB for an 8-Bit D/A — Bit 10 is the LSB for a 10-Bit D/A — Bit 12 is the LSB for a 12-Bit D/A. — Connect unused inputs to Analog Common (pin 24).

**Do not make any connections to pins (21) and (22). The unit can be damaged if pin (21) is accidentally shorted to Common.

22. LOGIC/BLOCK DRAWINGS

BB30

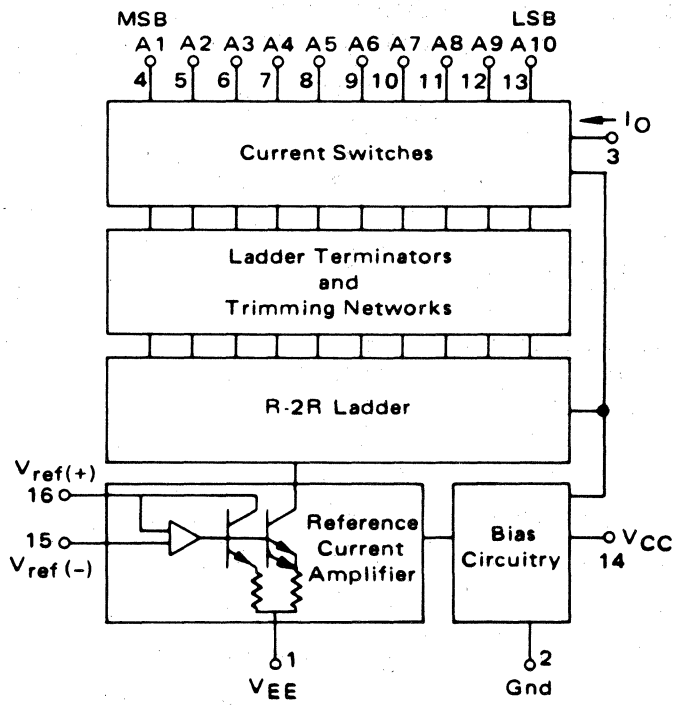

BB32

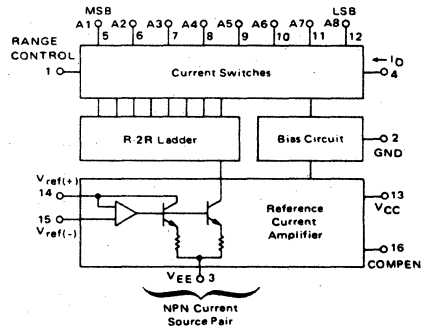

BB34

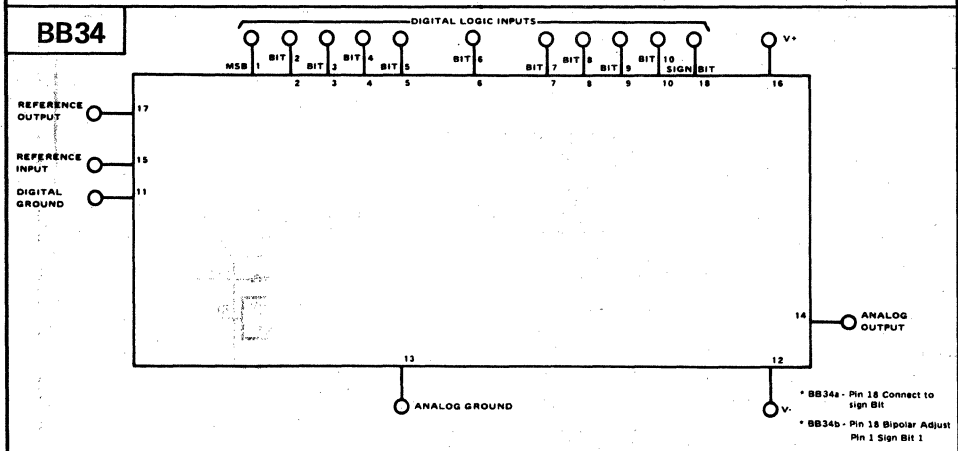

BB37

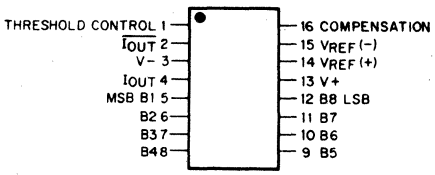

BB39

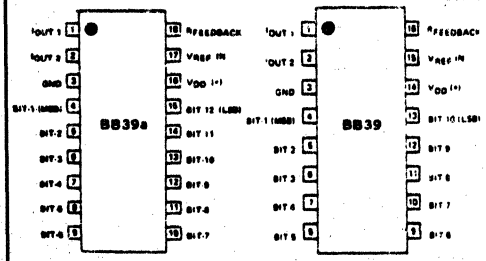

BB39b

PIN	FUNCTION	PIN	FUNCTION
1	FEEDBACK	13	BIT 14 IN (LSB)
2	OUTPUT 2	14	BIT 13 IN
3	OUTPUT 1	15	BIT 12 IN
4	NC	16	BIT 11 IN
5	BIT 1 IN (MSB)	17	BIT 10 IN
6	BIT 2 IN	18	BIT 9 IN
7	BIT 3 IN	19	BIT 8 IN
8	BIT 4 IN	20	BIT 7 IN
9	NC	21	BIT 6 IN
10	NC	22	BIT 5 IN
11	NC	23	+VDD
12	GROUND	24	REFERENCE IN

BB39c

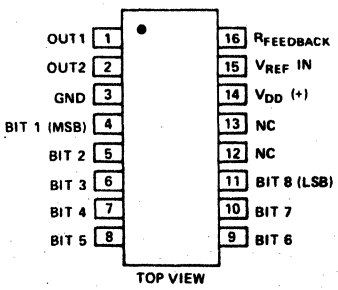

BB39d

PIN	FUNCTION
1	OUTPUT 1
2	OUTPUT 2
3	GROUND
4	BIT 1 IN (MSB)
5	BIT 2 IN
6	BIT 3 IN
7	BIT 4 IN
8	BIT 5 IN
9	BIT 6 IN
10	BIT 7 IN
11	BIT 8 IN
12	BIT 9 IN
13	BIT 10 IN
14	BIT 11 IN
15	BIT 12 IN
16	BIT 13 IN
17	BIT 14 IN (LSB)
18	+VDD
19	REFERENCE IN
20	FEEDBACK

22. LOGIC/BLOCK DRAWINGS

BB40

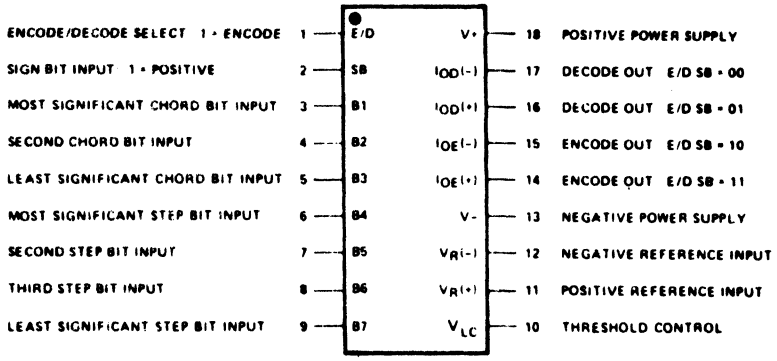

BB42

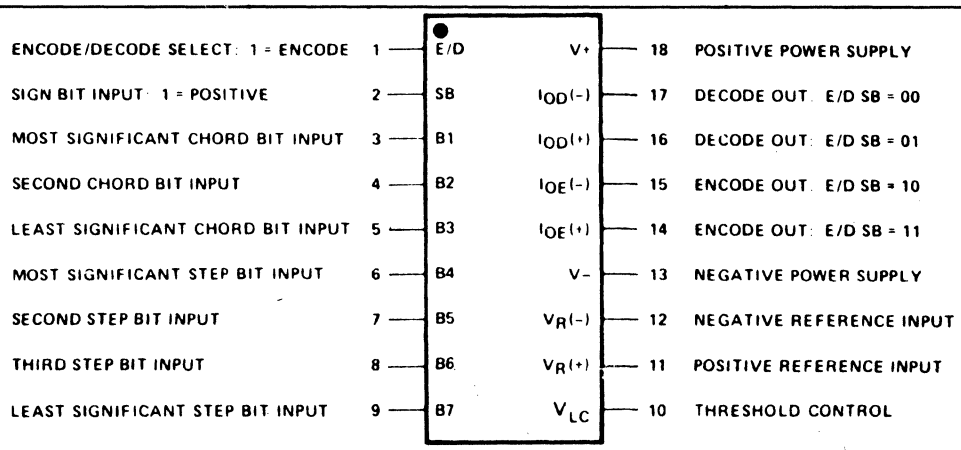

BB44

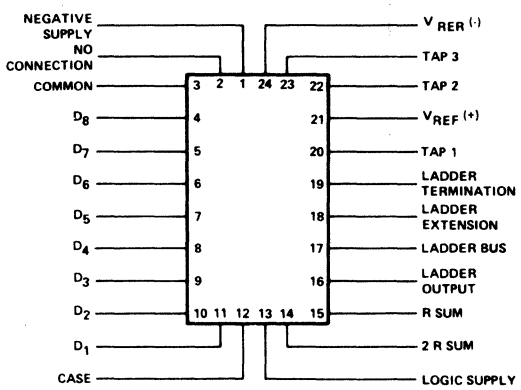

BB65

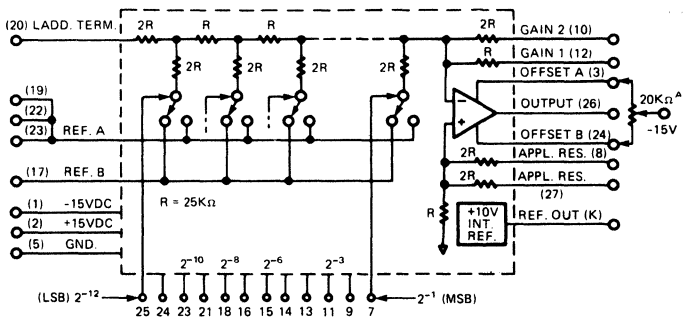

BB71

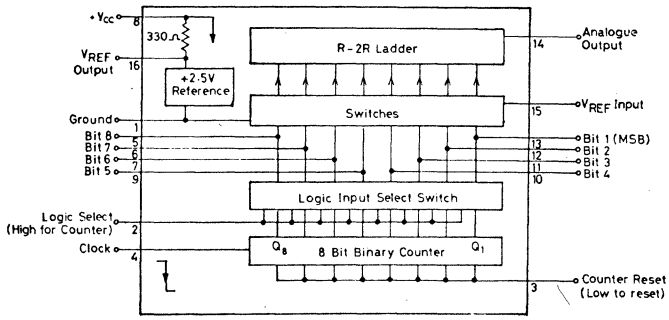

BB83

PIN	FUNCTION
1	MSB 1
2	MSB 2
3	MSB 3
4	MSB 4
5	MSB 5
6	MSB 6
7	MSB 7
8	LSB 8
9	— 15V DC
10	GND
11	
12	OUTPUT
13	
14	+15V DC
15	
16	+5V DC

22. LOGIC/BLOCK DRAWINGS

BB88

1. Iout1
2. Iout2
3. Com
4. Bit 1 (MSB)
5. Bit 2
6. Bit 3
7. Bit 4
8. Bit 5
9. Bit 6
10. Bit 7
11. Bit 8
12. Bit 9
13. Bit 10
14. Bit 11
15. Bit 12 (LSB)
16. +VDD
17. Vref In
18. R feedback

BB93

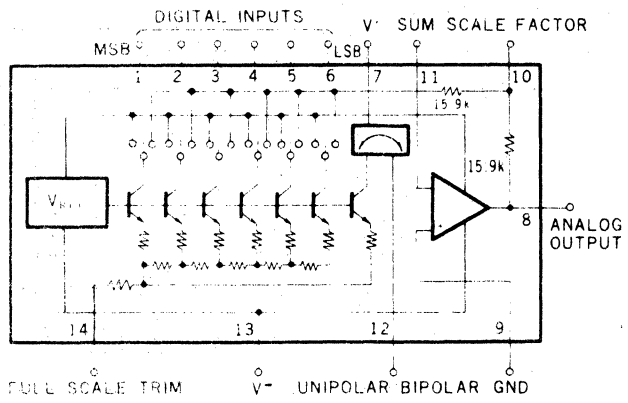

BB96

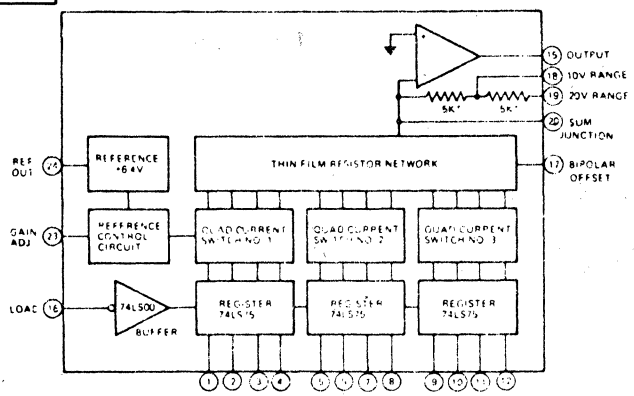

BB98

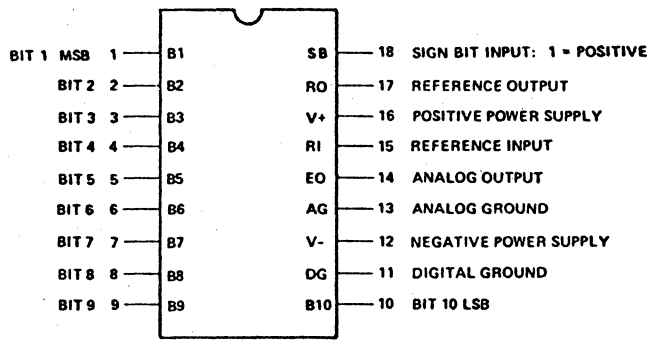

BB101

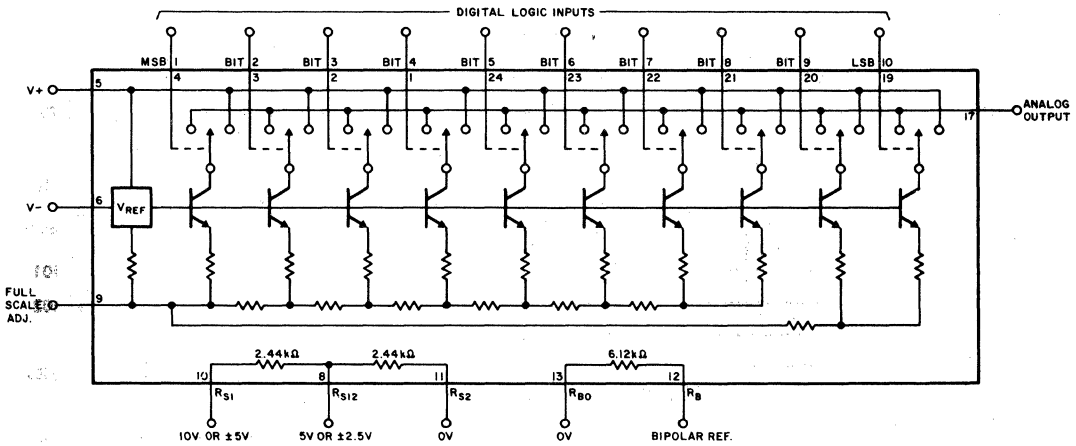

BB156

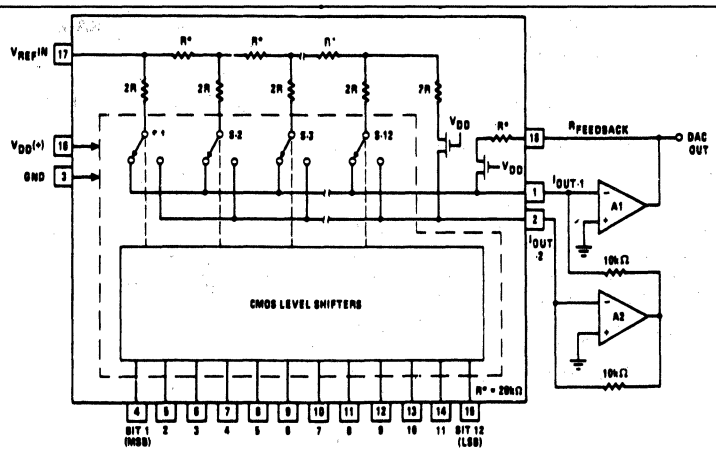

22. LOGIC/BLOCK DRAWINGS

BB157

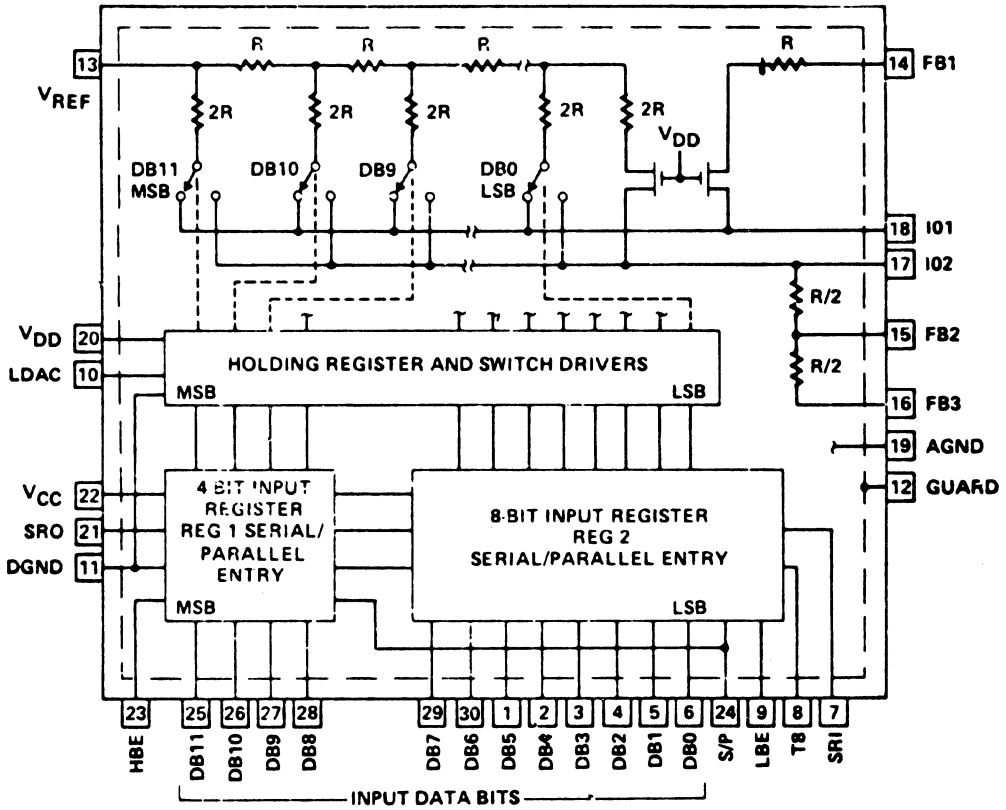

BB158

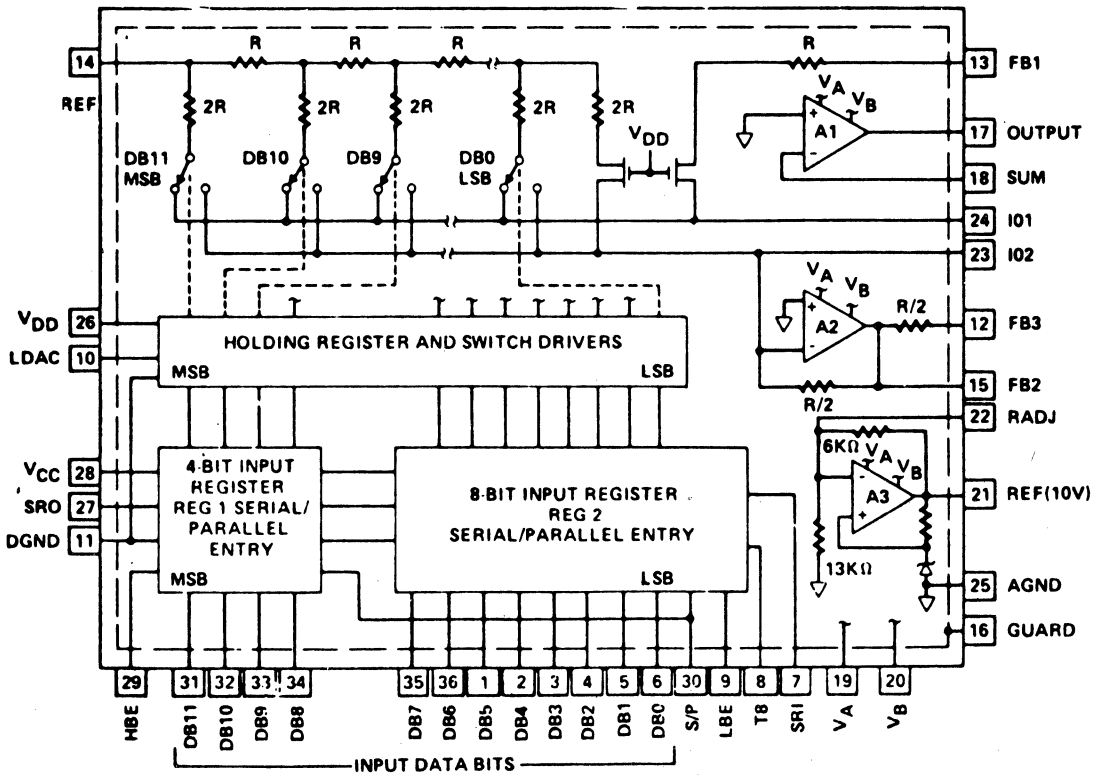

22. LOGIC/BLOCK DRAWINGS

BB159

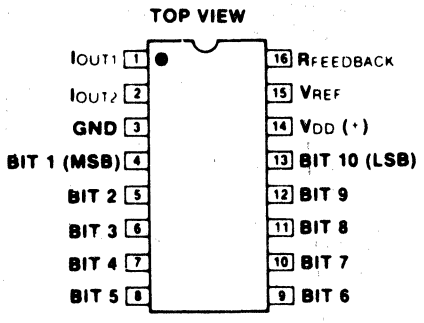

BB159

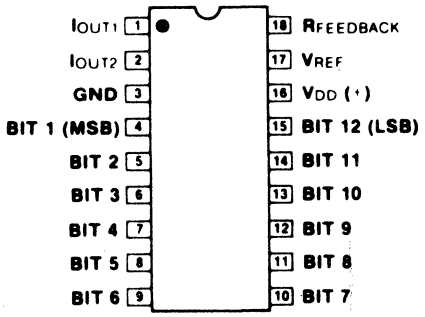

BB159a

BB160

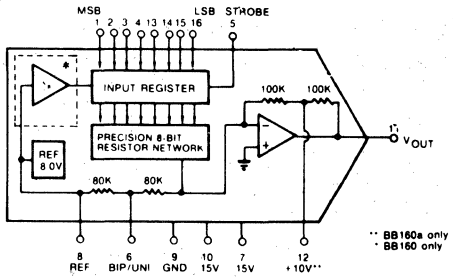

BB161

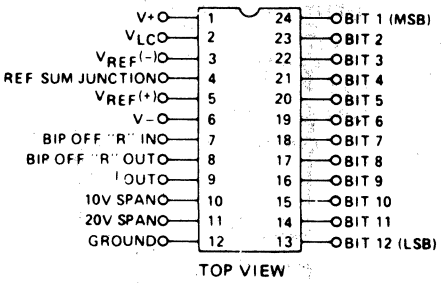

BB179

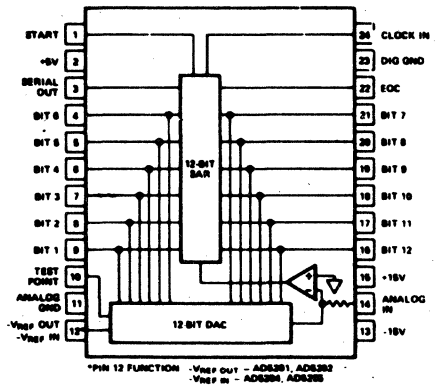

BB180

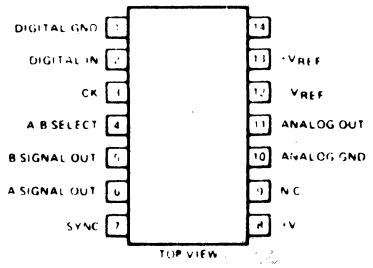

BB189

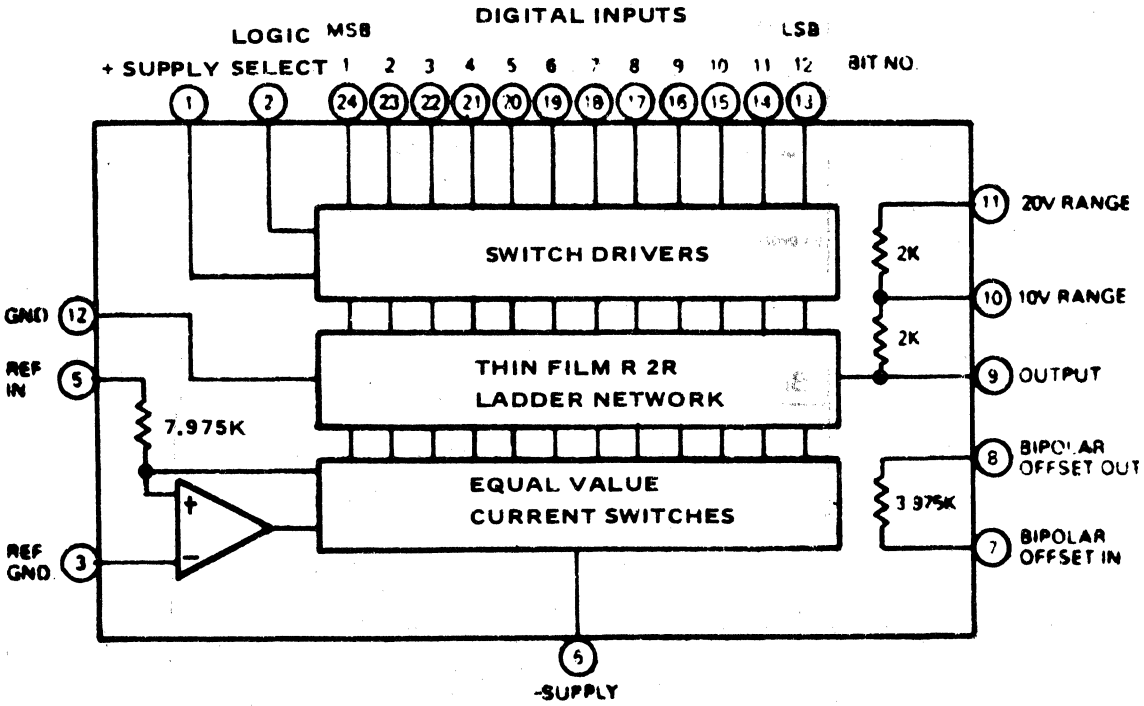

22. LOGIC/BLOCK DRAWINGS

BB192

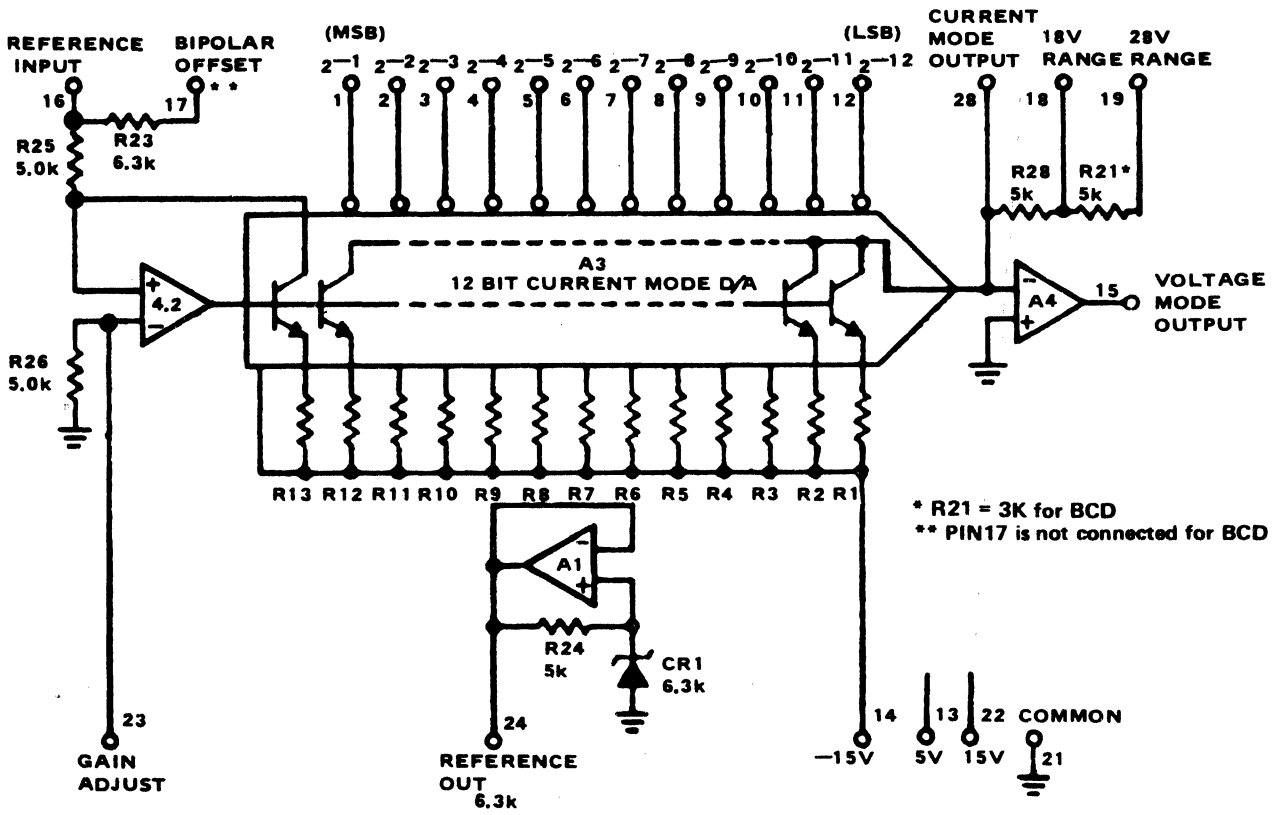

BB193

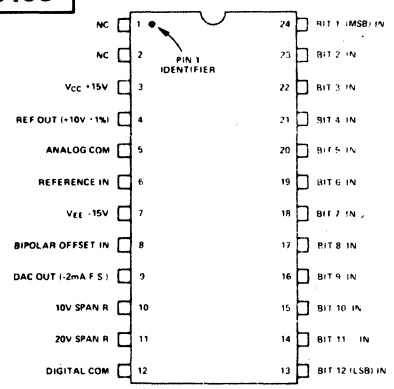

BB206

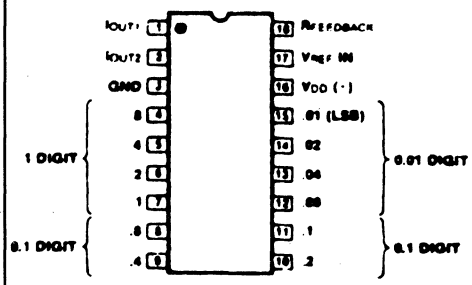

BB209

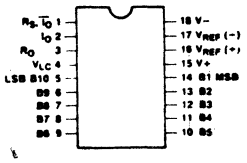

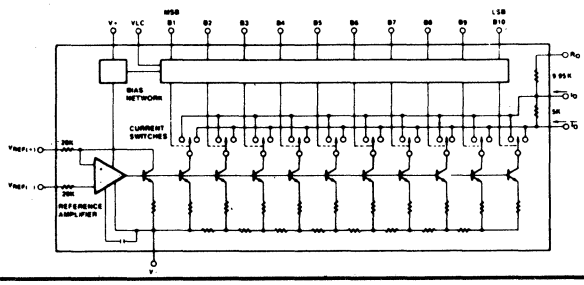

22. LOGIC/BLOCK DRAWINGS

BB210

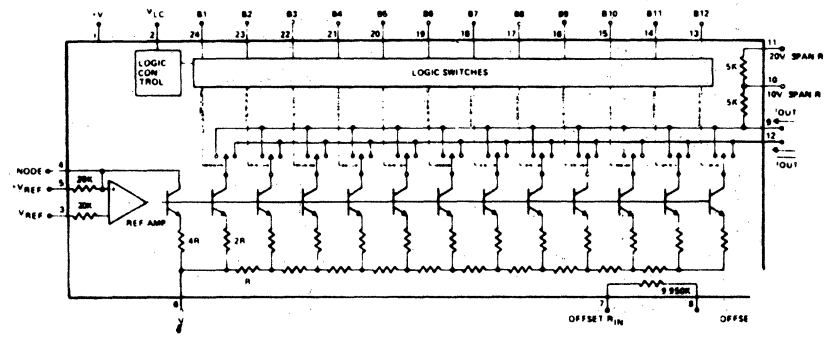

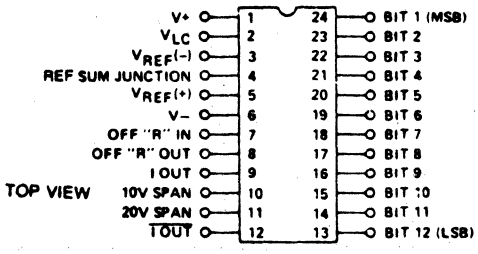

BB212

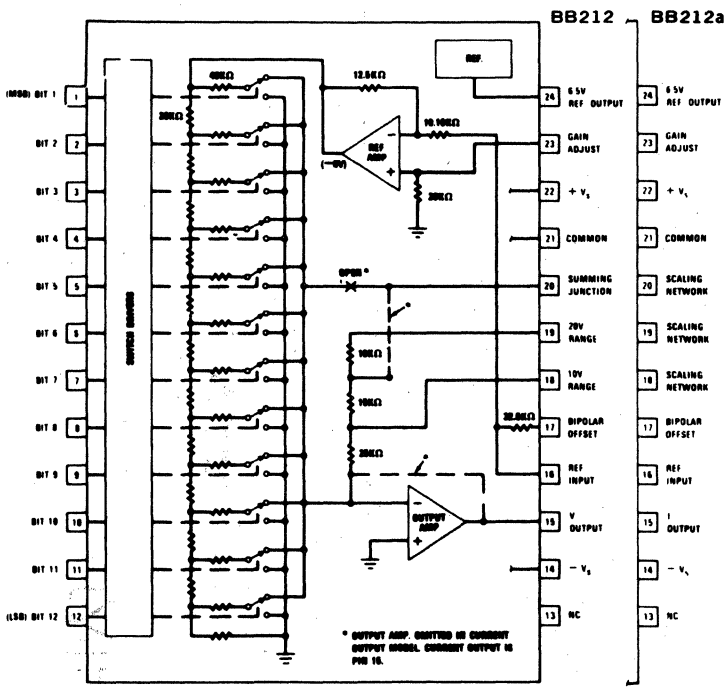

BB217

PIN ASSIGNMENTS

1. Vcc + 15

1. Vcc +15/+5VDC
2. CMOS/TTL LOGIC THRESHOLD
3. -INPUT, REF AMP
4. REF AMP SUMMING JUCTION
5. +INPUT, REF AMP
6. VEE, -15VDC
7. BIPOLAR OFFSET RESISTOR
8. BIPOLAR OFFSET RESISTOR
9. CURRENT OUTPUT
10. 10V RANGE
11. 20V RANGE
12. COMMON
13. BIT 12 (LSB)
14. BO
14. BIT 11
15. BIT 10
16. BIT 9
17. BIT 8
18. BIT 7
19. BIT 6
20. BIT 5
21. BIT 4
22a BIT 3
23. BIT 2
24. BIT 1 (LSB)

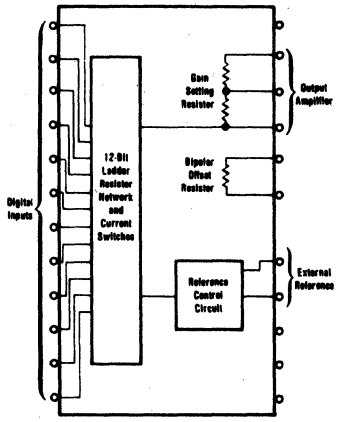

BB218

PIN ASSIGNMENTS

1. Vcc +15/VDC
2. CMOS/TTL Logic Threshold
3. NC*
4. REF Out
5. REF Gnd
6. REF Input
7. Vff -15VDC
8. Bipolar Offset Resistor
9. Current Output
10. 10V Range
11. 20 V Range
12. Common
13. Bit 12 (LSB)
14. Bit 11
15. Bit 10
16. Bit 9
17. Bit 8
18. Bit 7
19. Bit 6
20. Bit 5
21. Bit 4
22. Bit 3
23. Bit2
23. Bit 2
24. Bit 1 (MSB)

*Internally there is no connection to pin 3; therefore, pin 3 can be tied to pin 1 or can be left open.

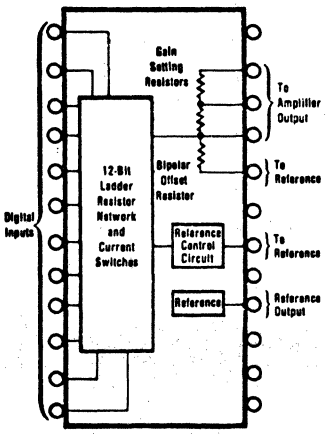

BB227

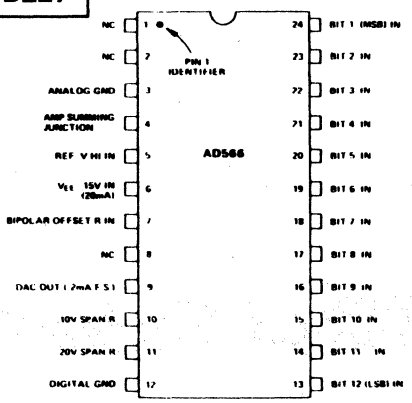

22. LOGIC/BLOCK DRAWINGS

BB231

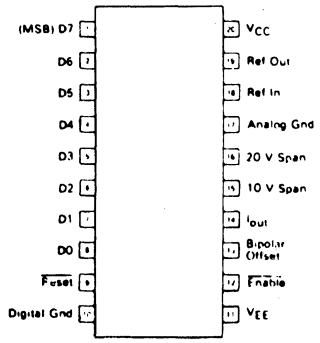

BB252

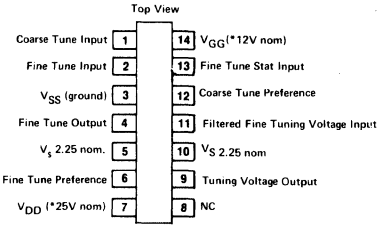

BB268

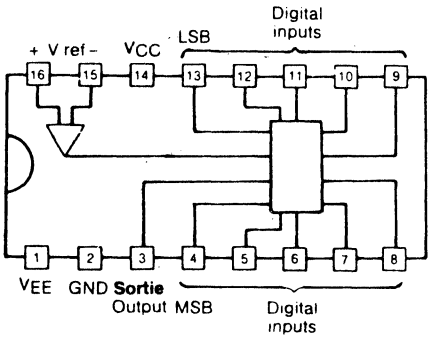

BB274

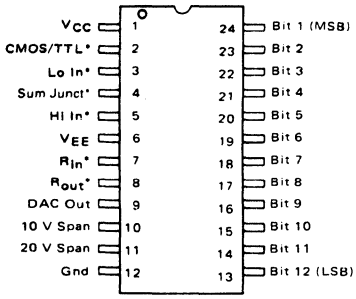

BB275

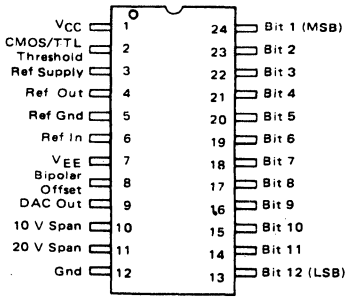

BB285

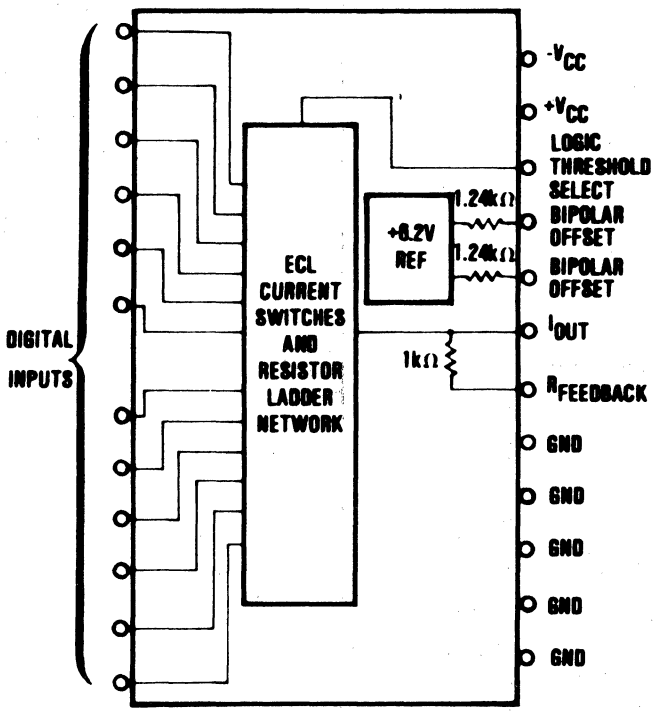

BB287

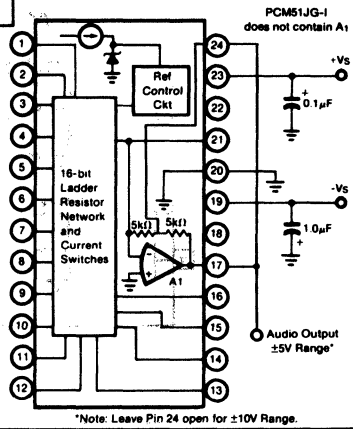

22. LOGIC/BLOCK DRAWINGS

BB294

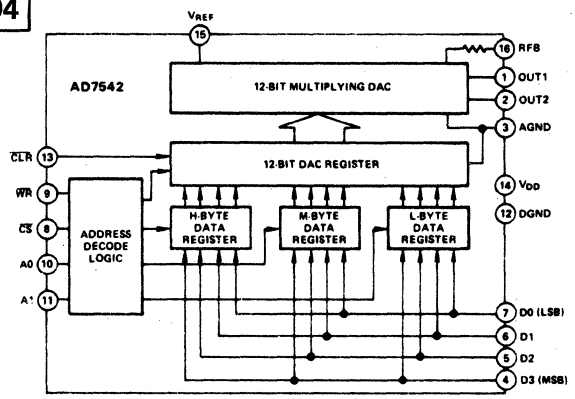

BB295

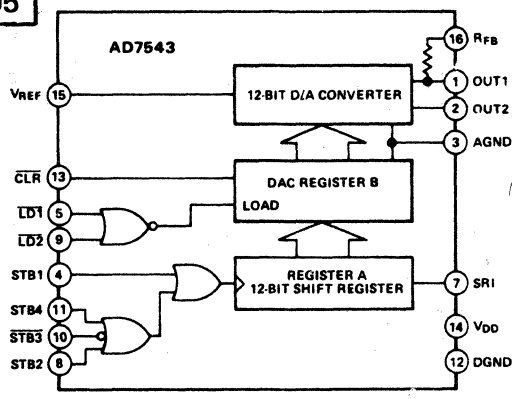

BB317

High speed monolithic D to A converter with reference

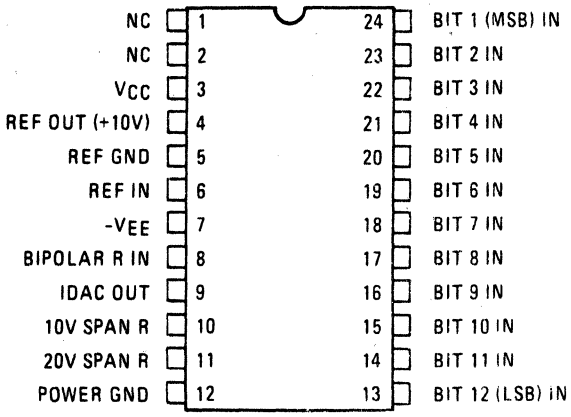

BC2

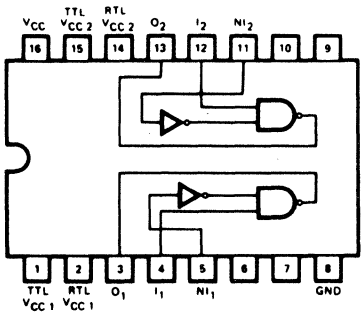

BC3

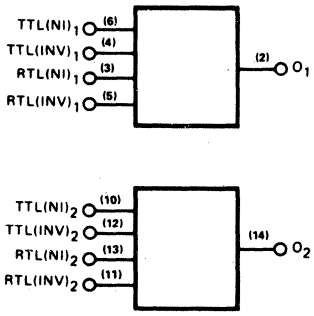

GRD – 8
V_{CC} – 16

BC4

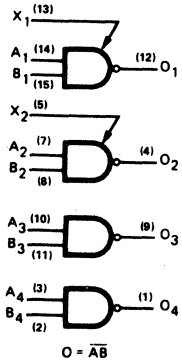

GRD – 8
V_{CC} – 16

BC6

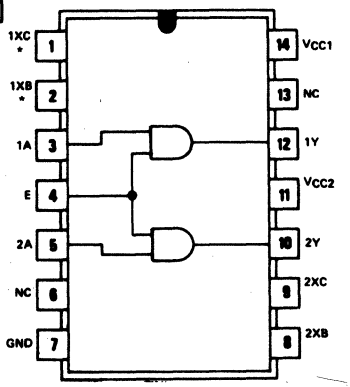

* NO CONNECTION TO PINS 1,2,8 AND 9 FOR BC6a.

22. LOGIC/BLOCK DRAWINGS

BC7

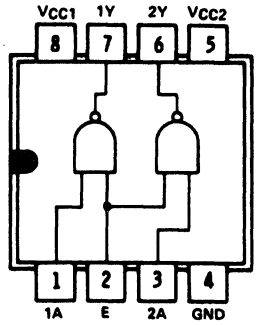

BC7

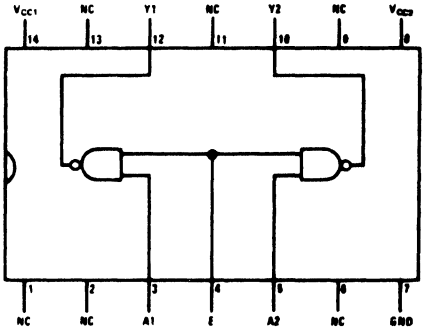

BC7a

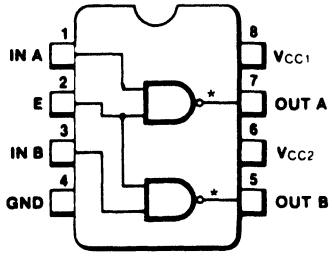

*BC7b: NON-INVERTING OUTPUT
BC7c: INVERTING OUTPUT

BC8

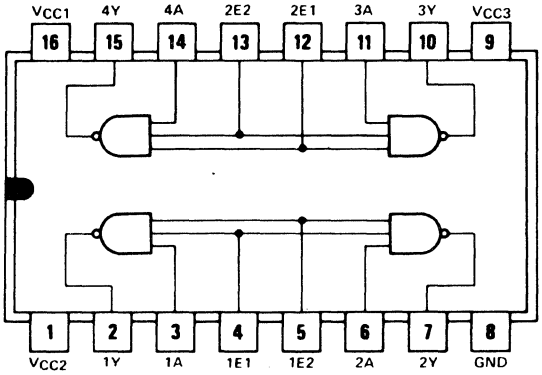

BC9

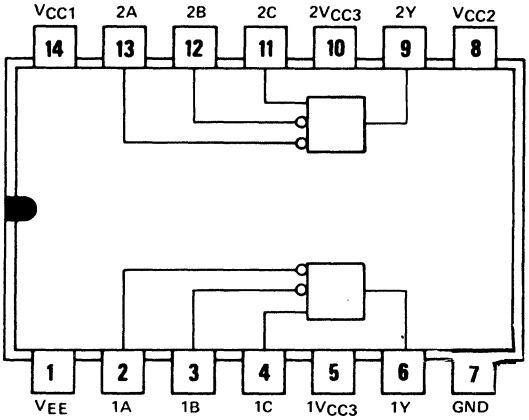

BC20

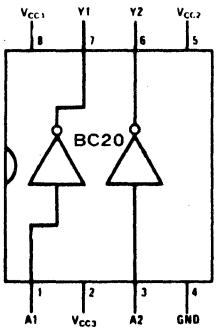

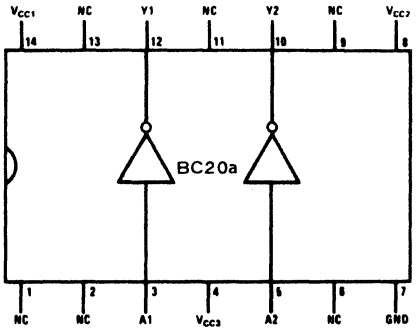

BC21

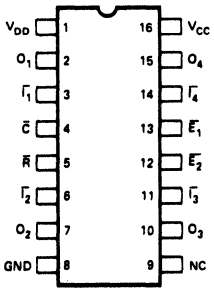

BC22

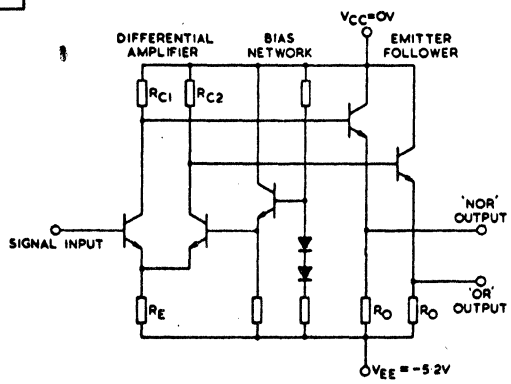

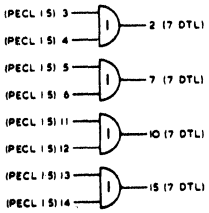

BC23

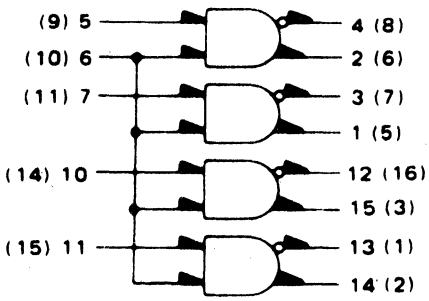

22. LOGIC/BLOCK DRAWINGS

BC24

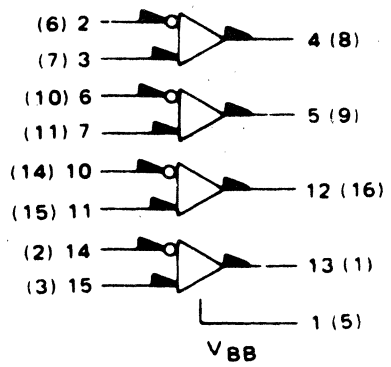

BC25

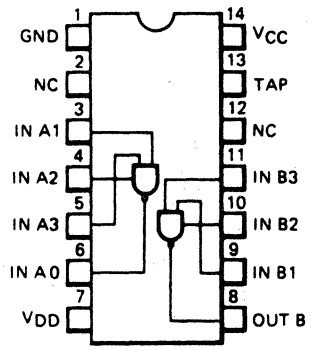

BC26

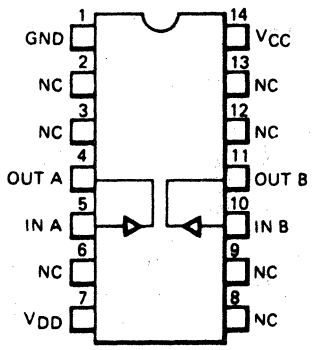

BC27

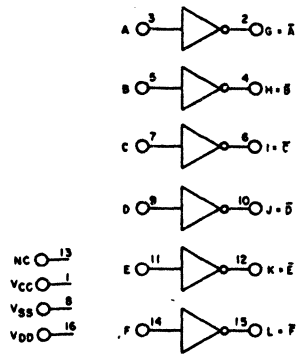

BC27a is NON Inverting Version of BC27

BC28

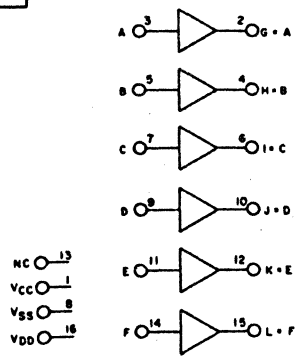

BC29

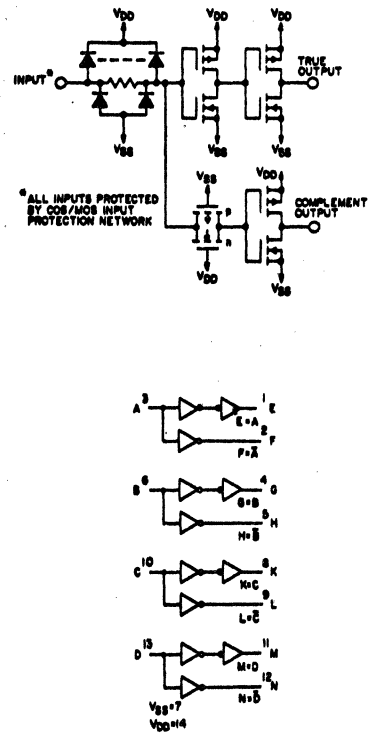

BC40

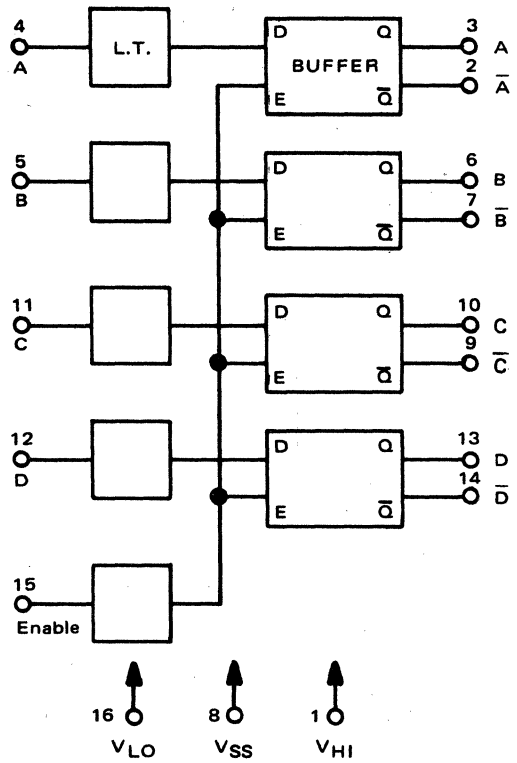

22. LOGIC/BLOCK DRAWINGS

BC44

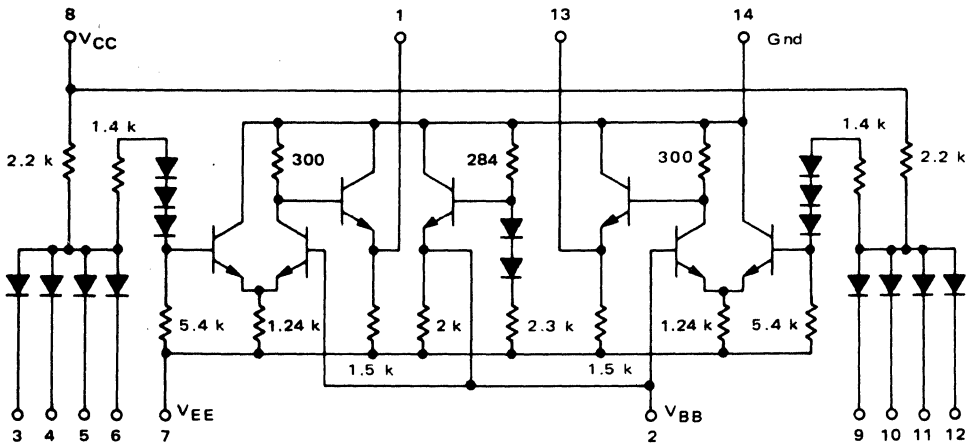

Resistor values are nominal.

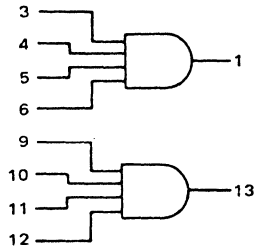

BC45

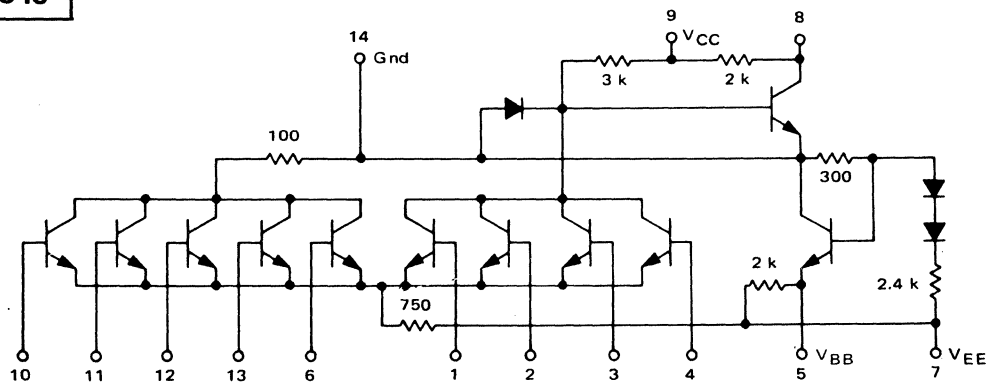

Resistor values are nominal.

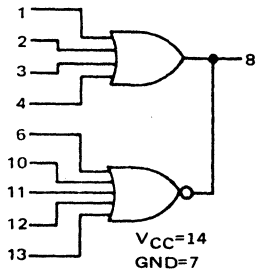

BC46

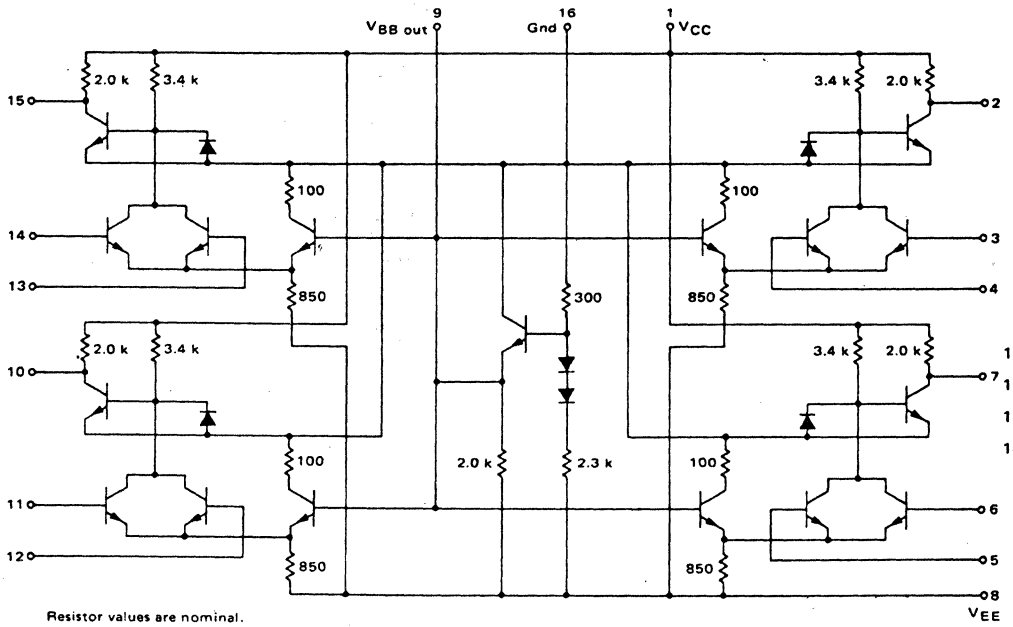

Resistor values are nominal.

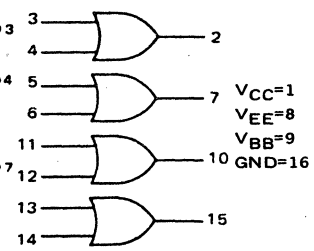

22. LOGIC/BLOCK DRAWINGS

BC54

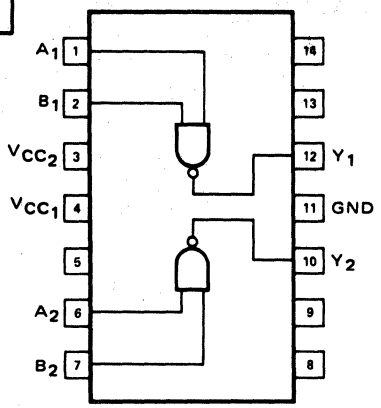

BC54

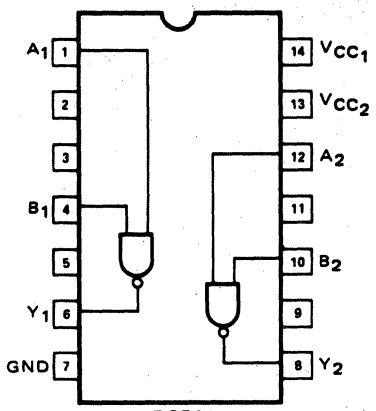

BC54a

BC56

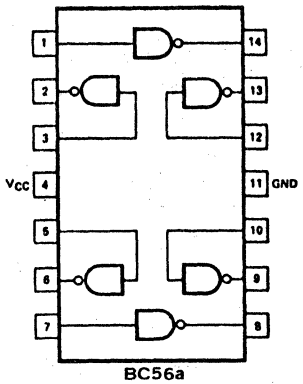

BC56a

BC59

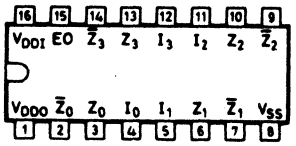

BC64

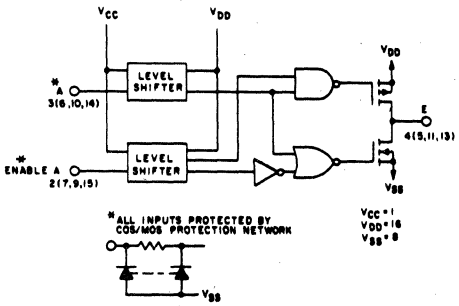

logic diagram (1 of 4 units).

BC65

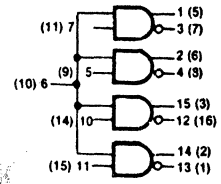

V_{CC} = 9 (13)
V_{EE} = 8 (12)
GND = 16 (4)

Logic Equations
2 = 5•6
4 = 5•6

BC78

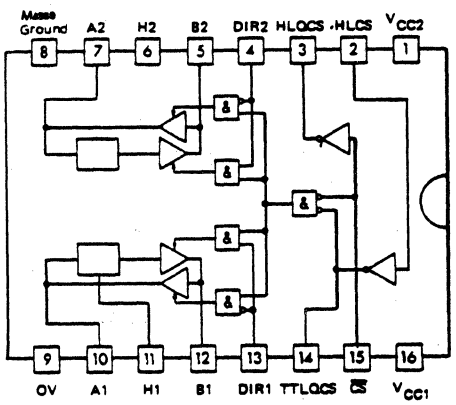

BC79

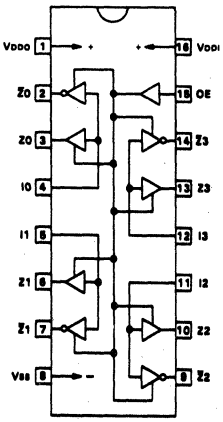

BC80

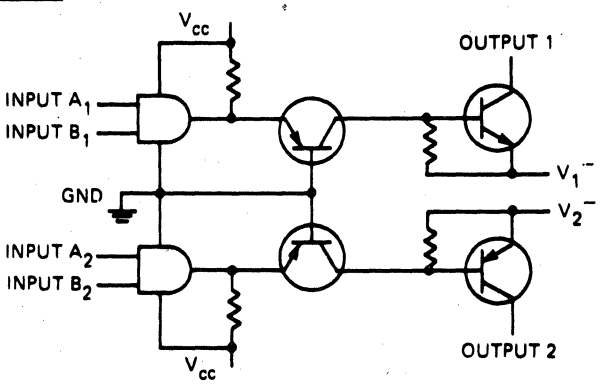

22. LOGIC/BLOCK DRAWINGS

CA27

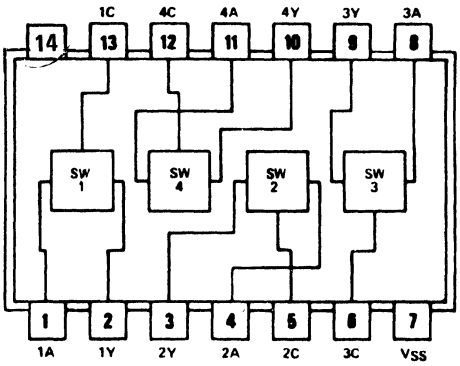

CA30

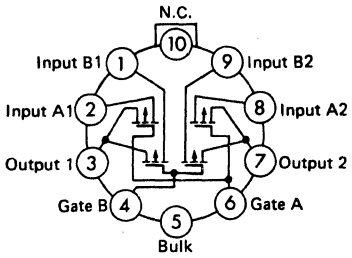

Pin 5 connected to case and device bulk

CA31

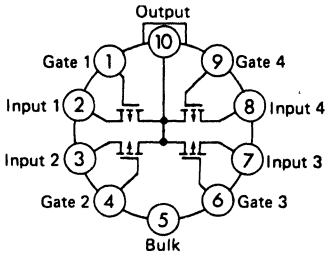

Pin 5 connected to case and device bulk

CA32

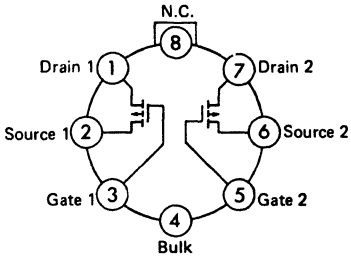

Pin 4 connected to case and device bulk

CA33

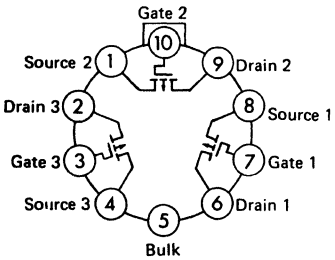

Pin 5 connected to case and device bulk

CA4

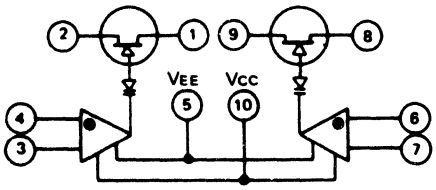

CA34

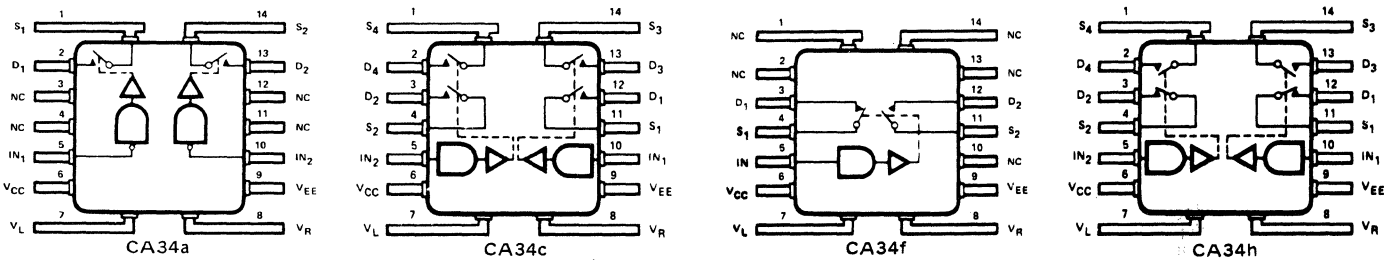

CA35

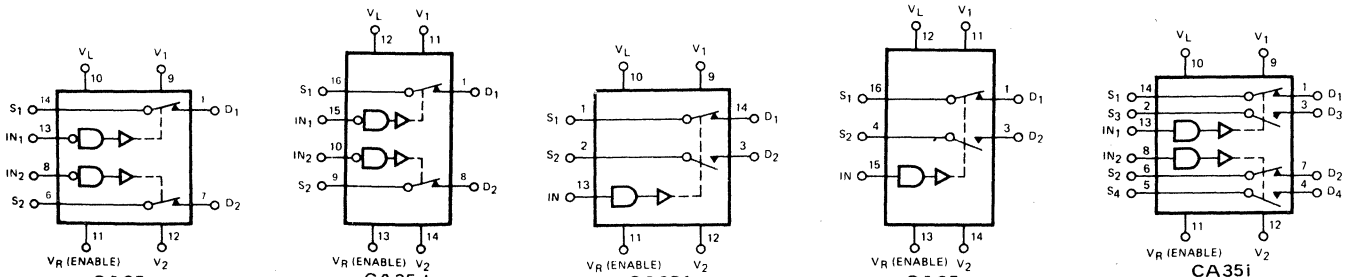

Continued on next page

CA35 Continued

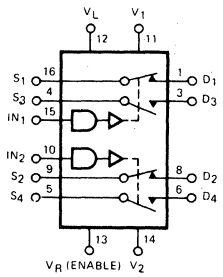

CA35j

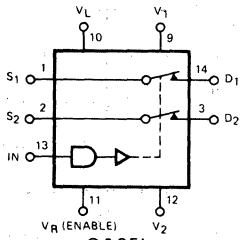

CA35k

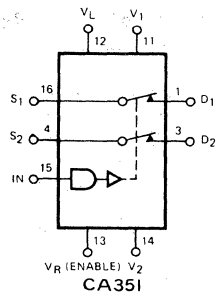

CA35l

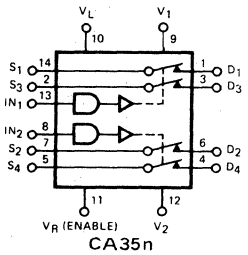

CA35n

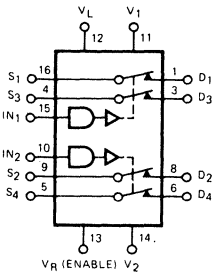

CA35o

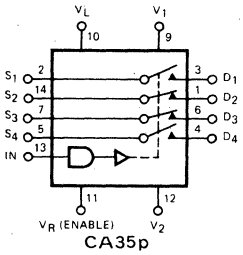

CA35p

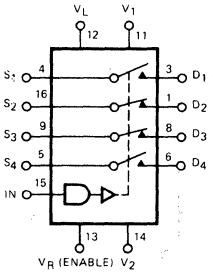

CA35q

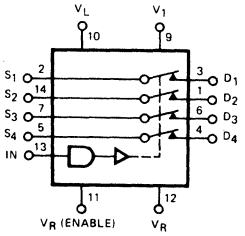

CA35r

CA36

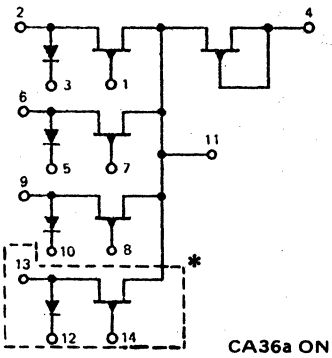

CA36a ONLY

CA44

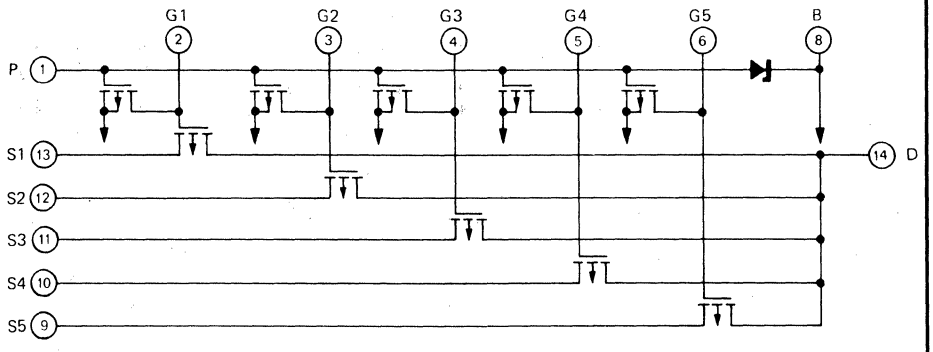

CA45

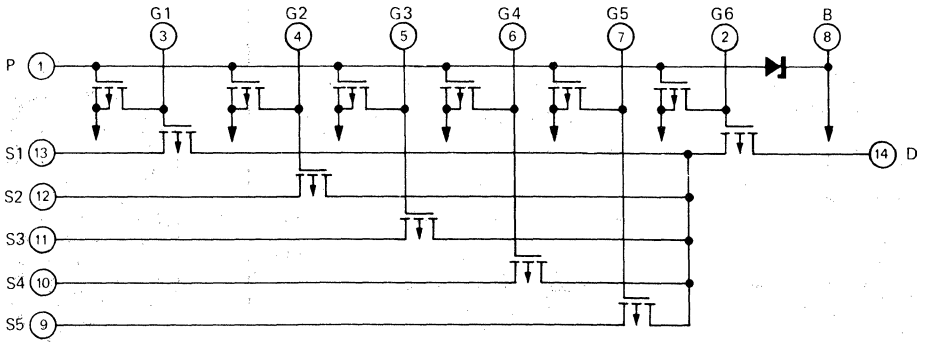

22. LOGIC/BLOCK DRAWINGS

CA46

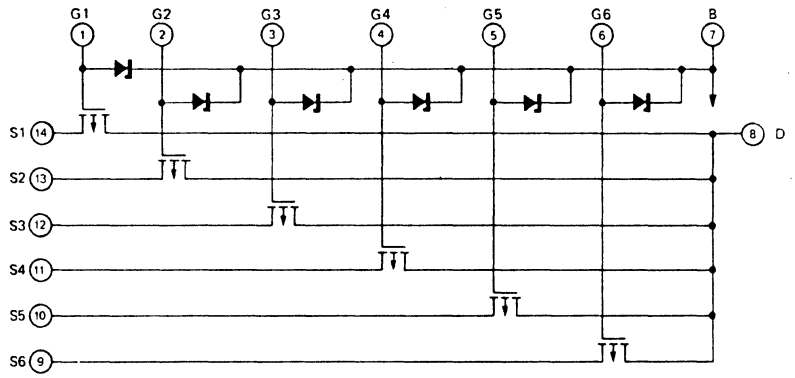

CA47

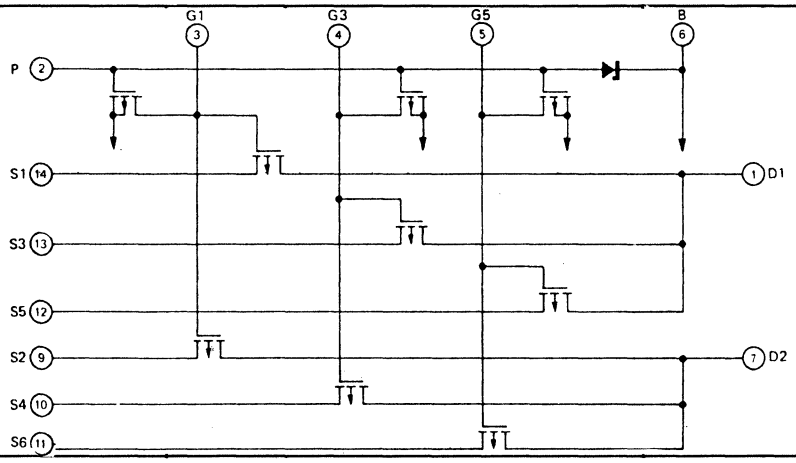

CA48

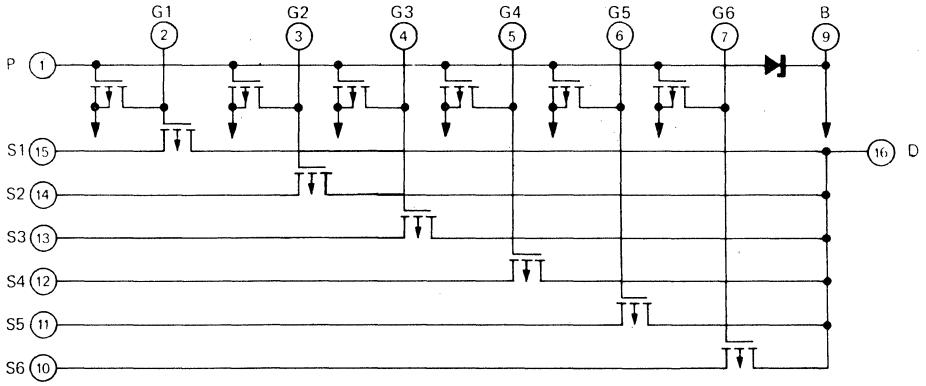

CA49

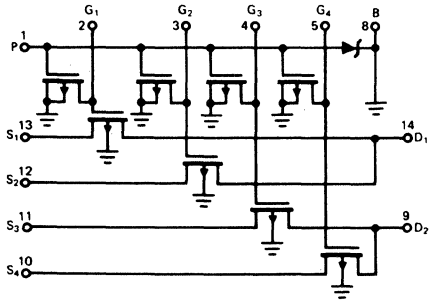

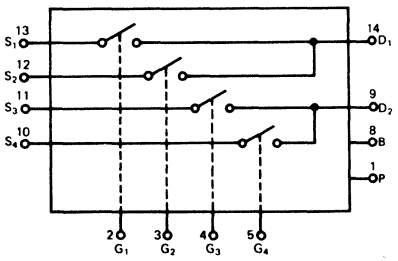

CA52

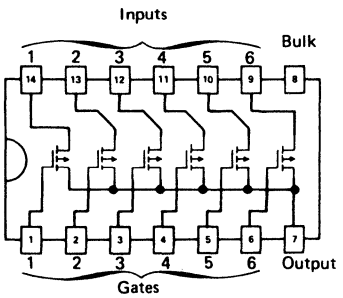

22. LOGIC/BLOCK DRAWINGS

CA53

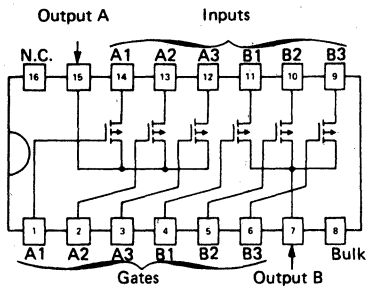

CA54

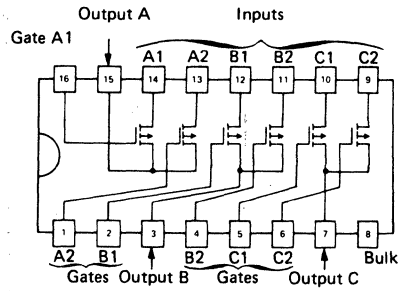

CA55

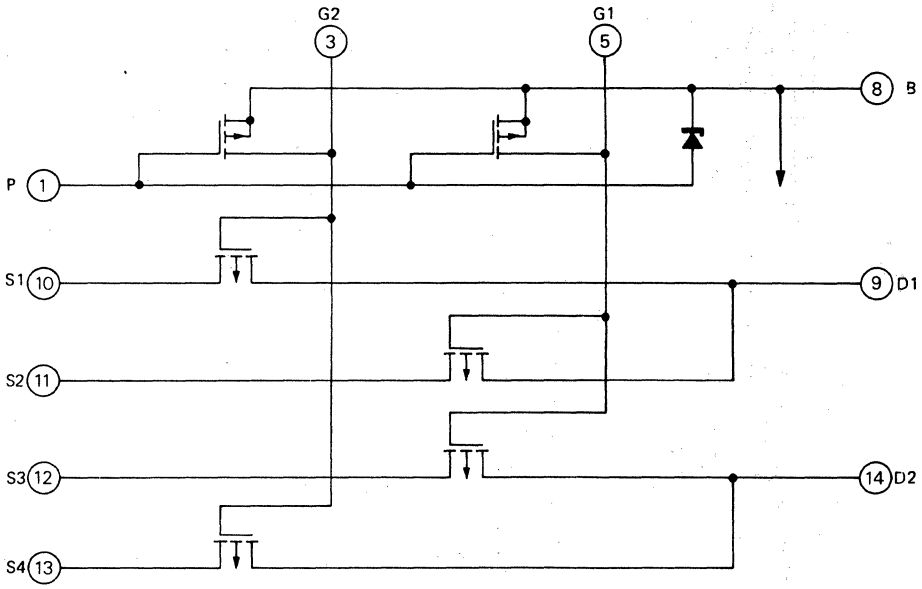

CA59

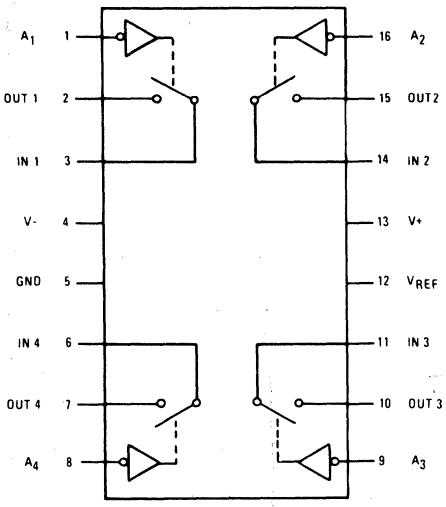

CA61

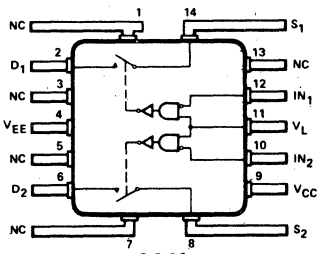

CA61

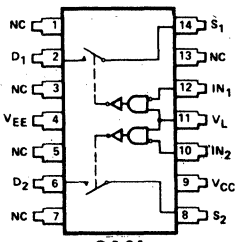

CA61a

CA62

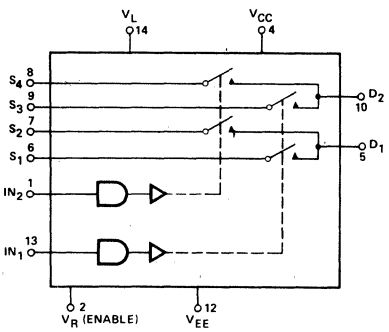

CA63

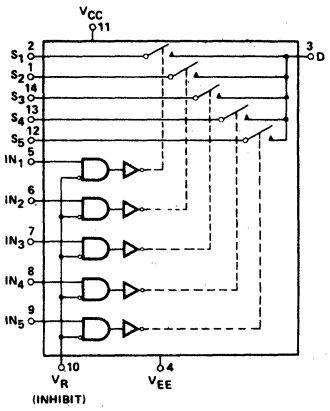

22. LOGIC/BLOCK DRAWINGS

CA64

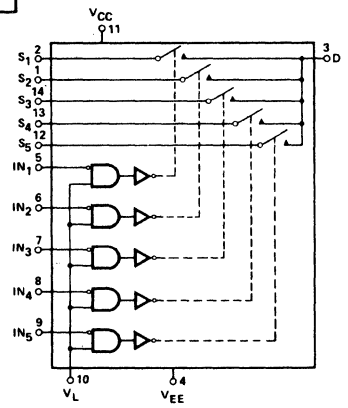

CA65

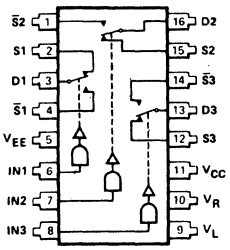

CA66

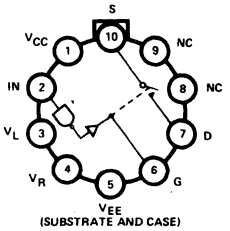

CA67

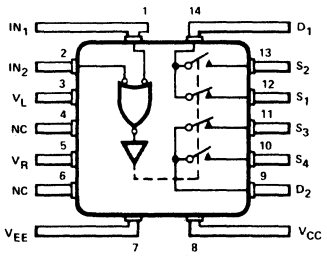

CA67

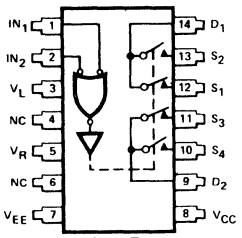

CA67a

CA68

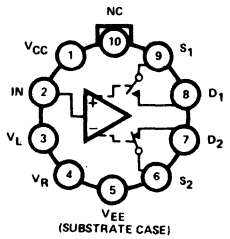

CA71

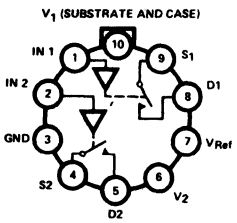

CA71

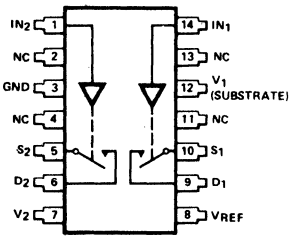

CA71b

CA72

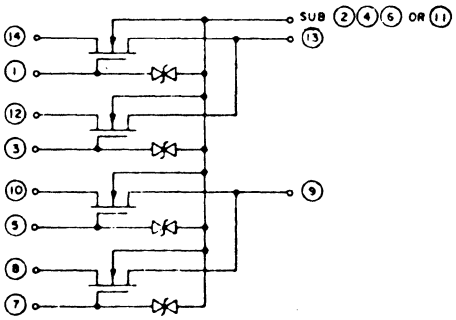

CA73

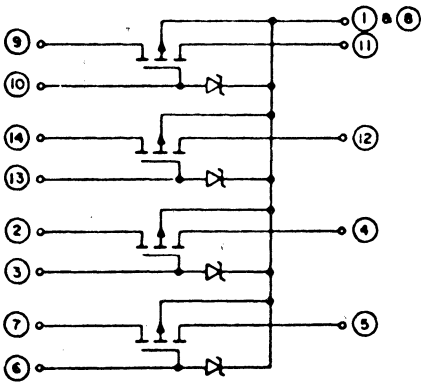

22. LOGIC/BLOCK DRAWINGS

CA74

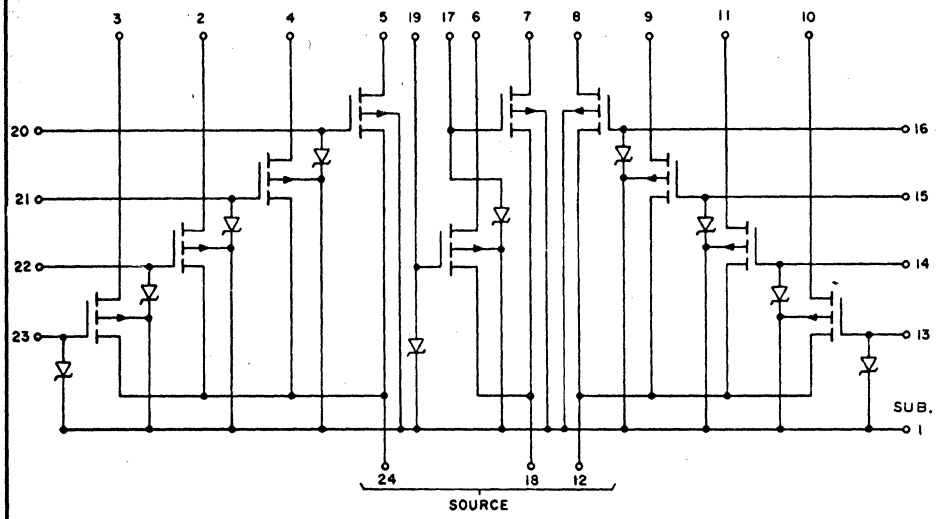

CA79

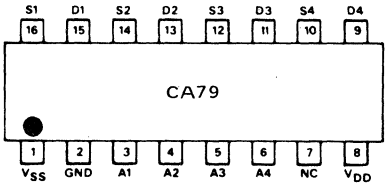

CA80

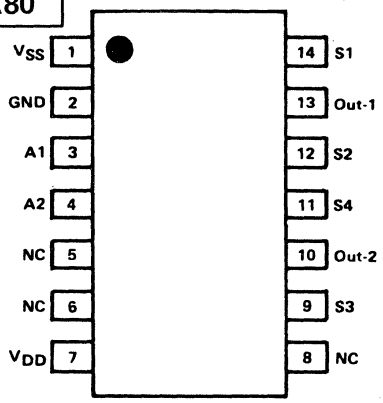

CA83

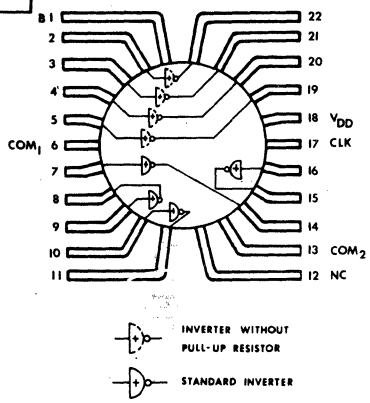

CA84

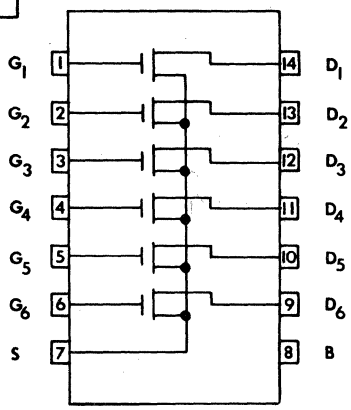

CA85

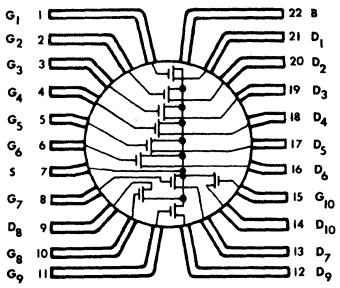

CA86

Pin	Function		
1	G_1	12	D_9
2	G_2	13	D_7
3	G_3	14	D_{10}
4	G_4	15	G_{10}
5	G_5	16	D_6
6	G_6	17	D_5
7	Source	18	D_4
8	G_7	19	D_3
9	D_8	20	D_2
10	G_8	21	D_1
11	G_9	22	Substrate

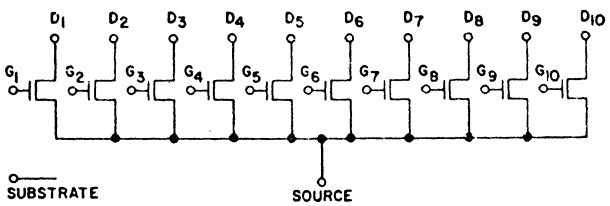

22. LOGIC/BLOCK DRAWINGS

CA87

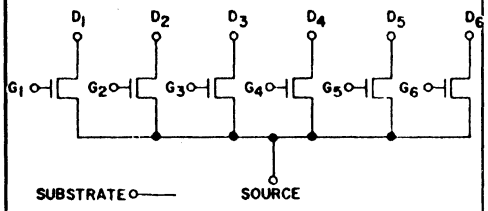

Pin	Function
1	G_1
2	G_2
3	G_3
4	G_4
5	G_5
6	G_6
7	Source
8	Substrate
9	D_6
10	D_5
11	D_4
12	D_3
13	D_2
14	D_1

CA88

Pin	Function
1	SUBSTRATE
2	SWITCH 2 RETURN
3	CONTROL 3
4	OUTPUT 3
5	INPUT 3
6	SWITCH 3 RETURN
7	INPUT 2
8	OUTPUT 2
9	CONTROL 2
10	INHIBIT
11	LOGIC GROUND
12	V_{DD}
13	CONTROL 1
14	N/C
15	N/C
16	OUTPUT 1
17	INPUT 1
18	SWITCH 4 RETURN
19	INPUT 4
20	OUTPUT 4
21	CONTROL 4
22	SWITCH 1 RETURN

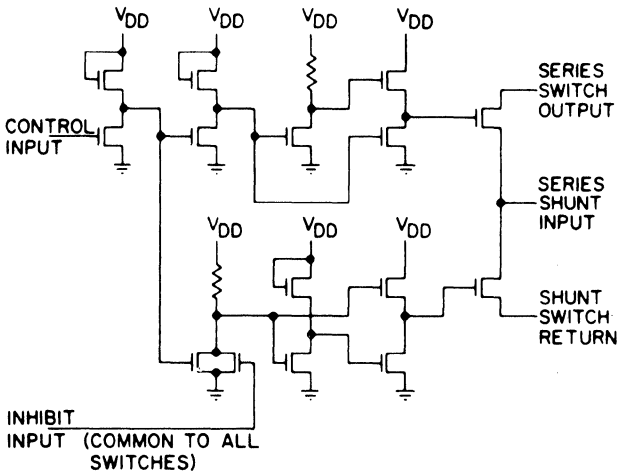

CA90

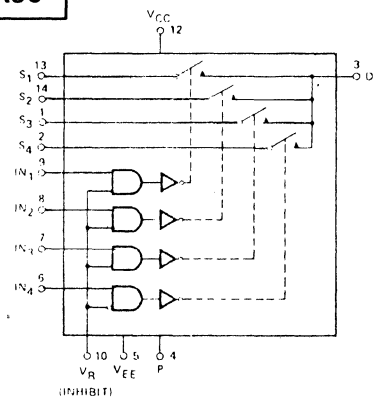

CA91

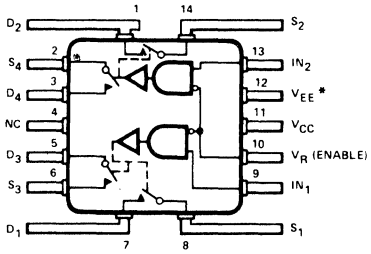

CA91

CA92

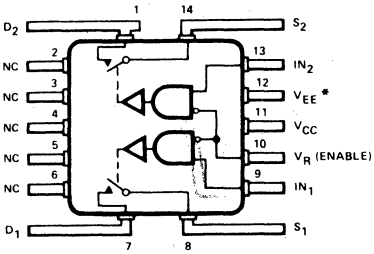

CA92

CA93

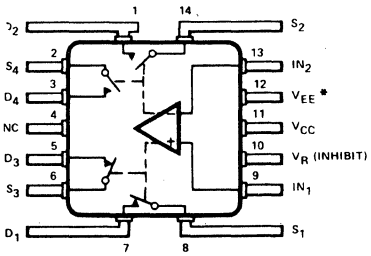

CA93

CA94

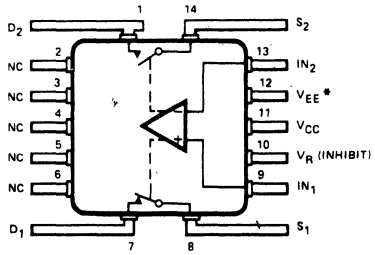

CA94

CA100

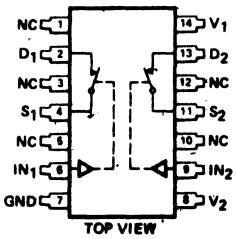

22. LOGIC/BLOCK DRAWINGS

CA102

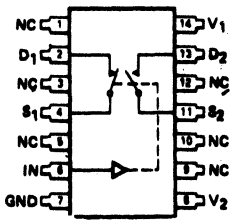

CA103

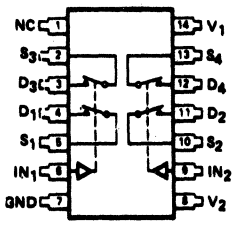

CA104

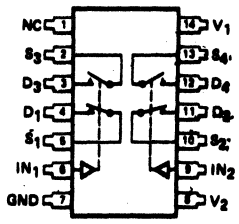

CA105

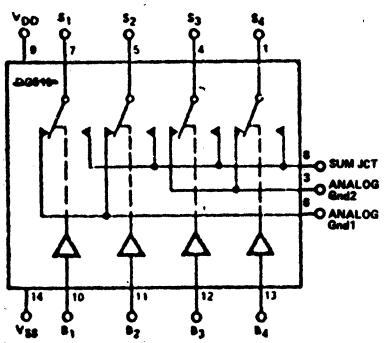

CA106

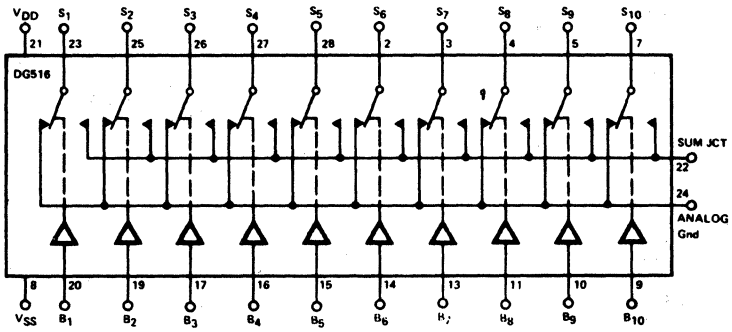

CA107

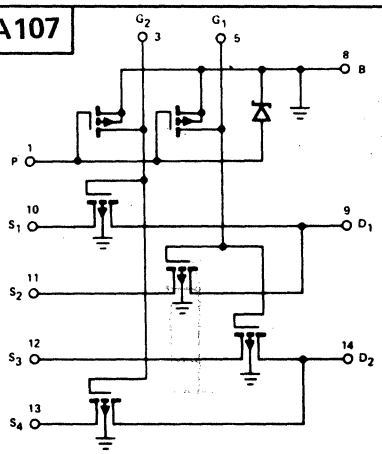

CA108

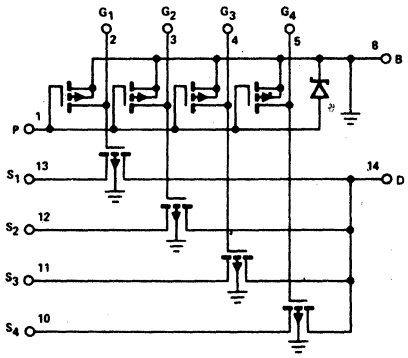

CA109

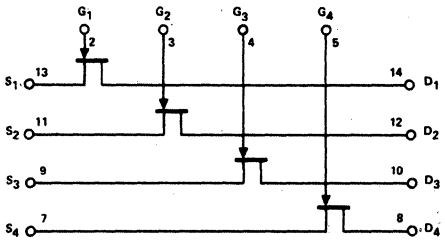

CA110

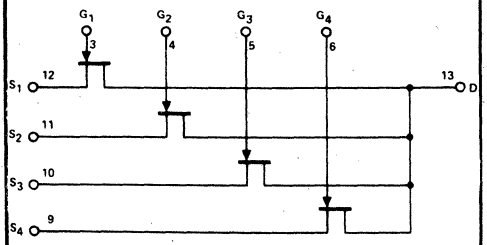

CA112

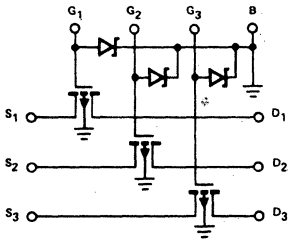

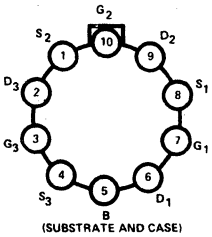

22. LOGIC/BLOCK DRAWINGS

CA114

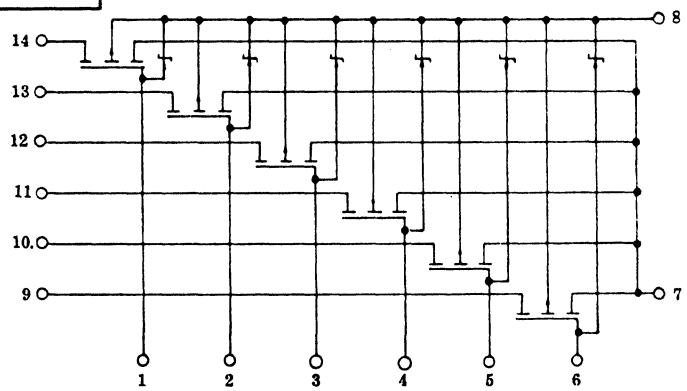

CA128

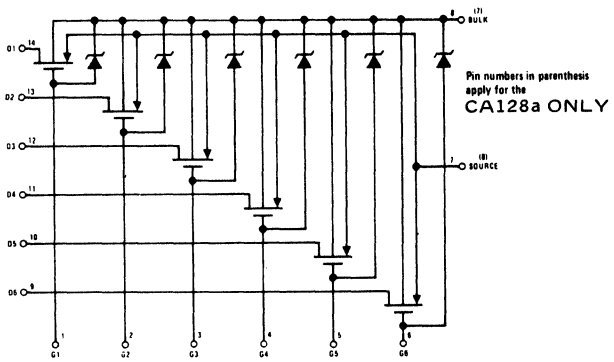

CA156

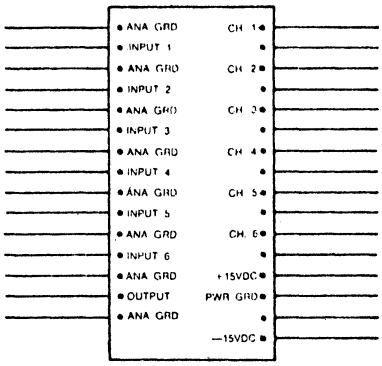

CA166

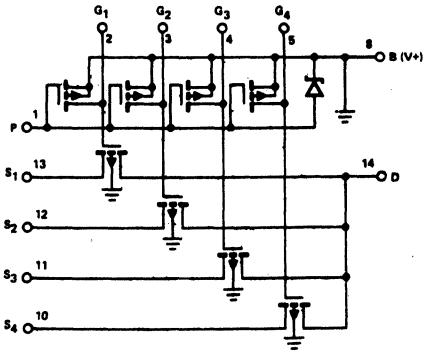

CA167

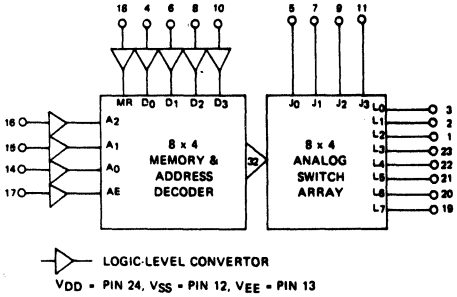

CA175

PIN FUNCTION

1. Source 1
2. Gate 1
3. Substrate
4. Gate 2
5. Gate 3
6. Substrate
7. Gate 4
8. Source 4
9. Drain 4
10. Drain 3
11. Source 3
12. Source 2
13. Drain 2
14. Drain 1

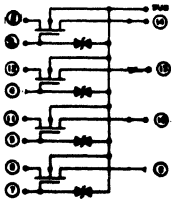

CA176

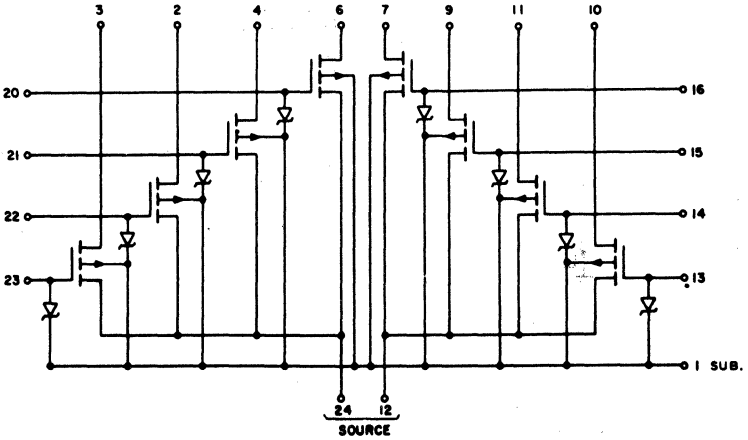

CA183

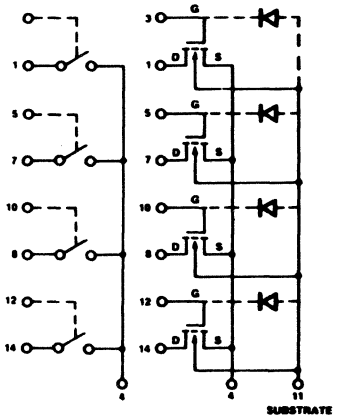

CA50

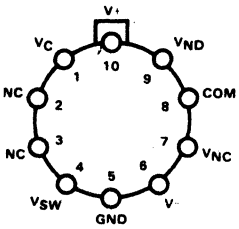

CA51

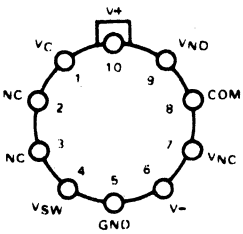

22. LOGIC/BLOCK DRAWINGS

CA70

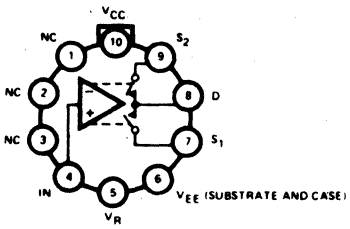

CA70

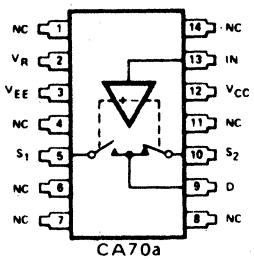

CA70a

CA116

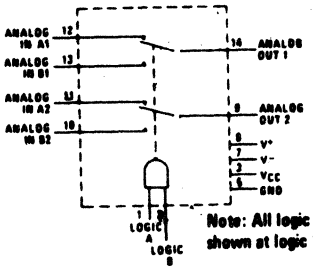

Note: All logic inputs shown at logic "1."

CA117

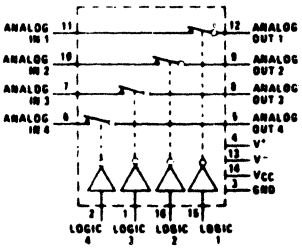

CA118

Dual DPST

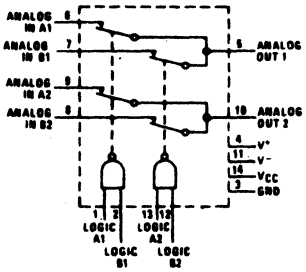

Note: Pin connections are identical for DIP and Flatpack. All logic inputs shown at logic "1."

CA120

DUAL SPST

* Pinned out in N Package only.

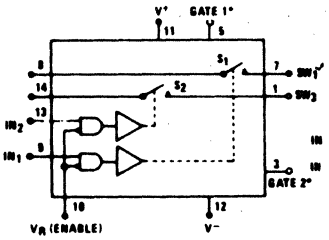

DUAL SPST

Note: Dotted line portions are not applicable to the dual SPST.

CA135

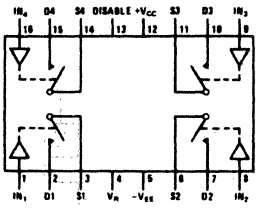

CA135

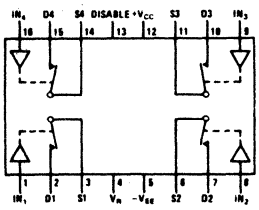

CA135a

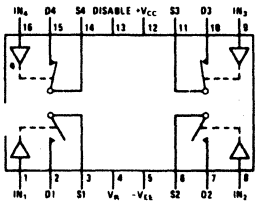

CA135b

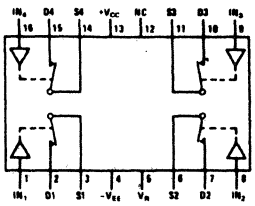

CA135c

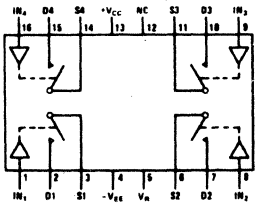

CA135d

22. LOGIC/BLOCK DRAWINGS

CA160

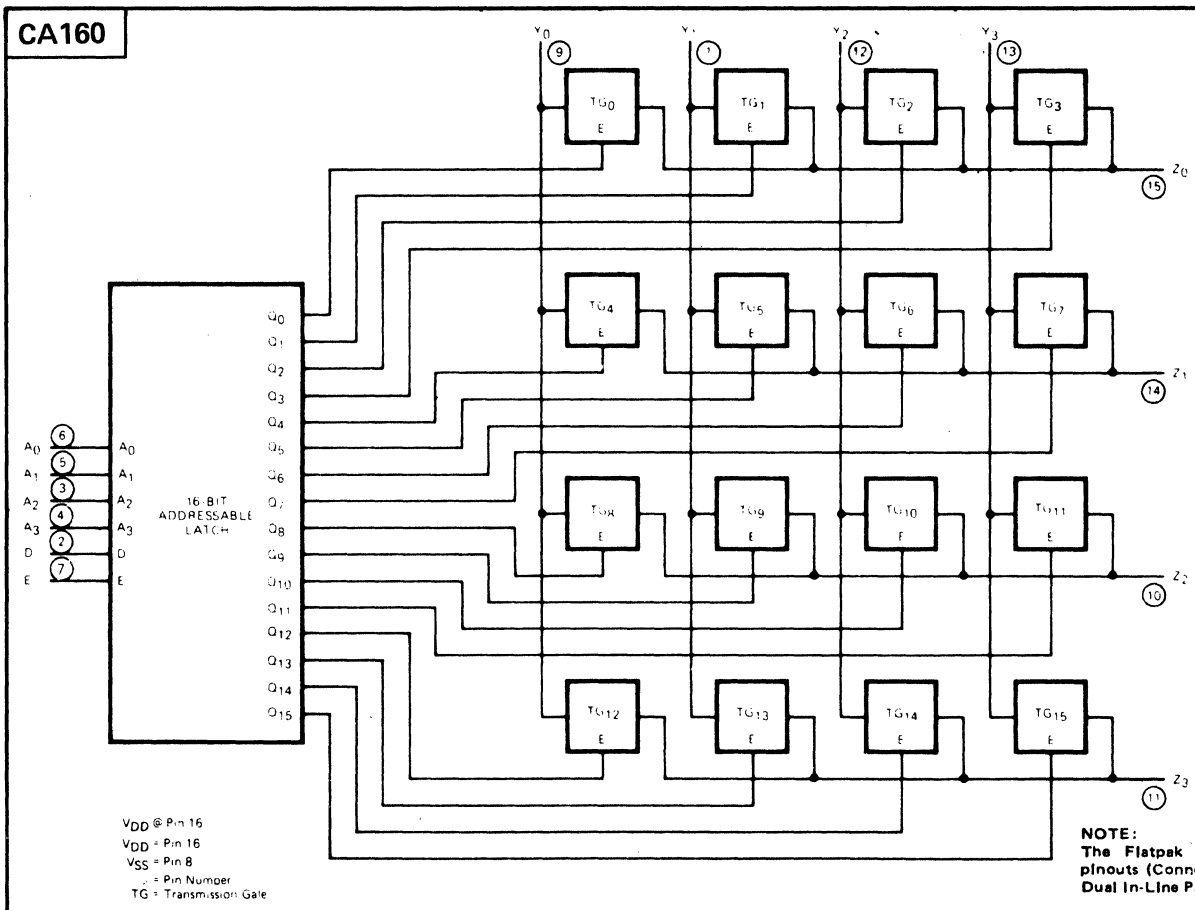

NOTE:
The Flatpak version has the same pinouts (Connection Diagram) as the Dual In-Line Package.

CB9

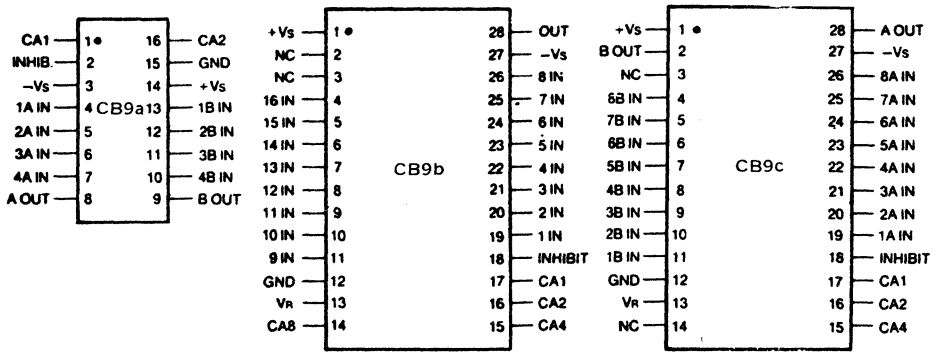

CB72

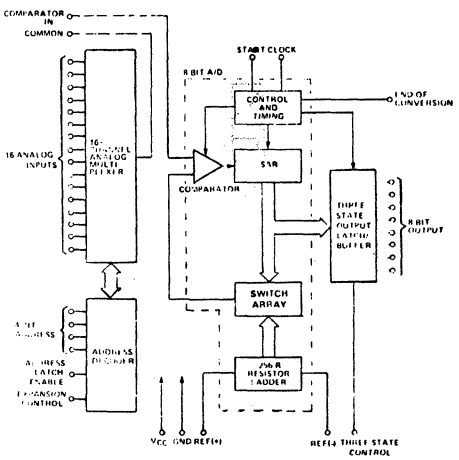

CB59b

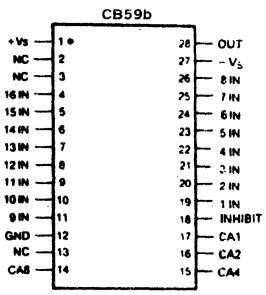

CB73

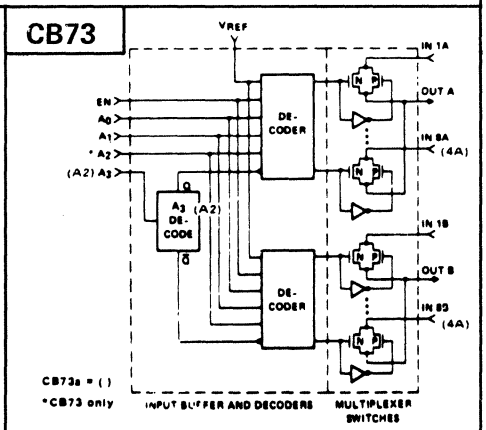

22. LOGIC/BLOCK DRAWINGS

CB10

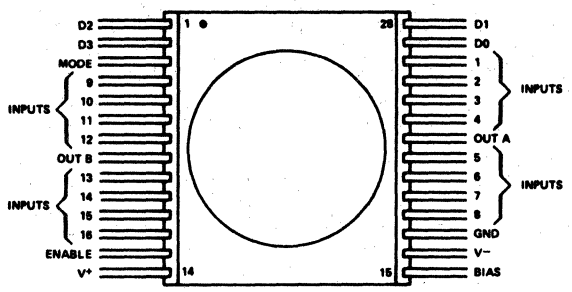

CB14

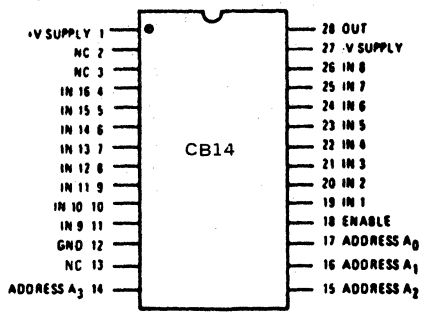

CB19

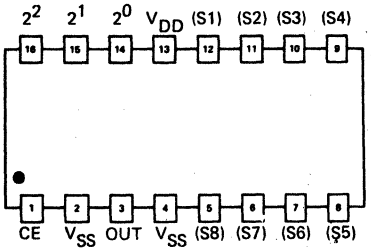

Pin 2 and 4 are internally connected to case and device bulk.

CB21

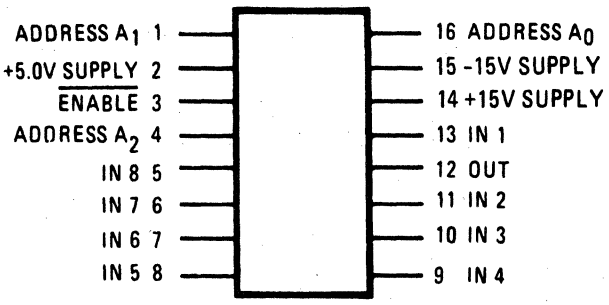

CB22

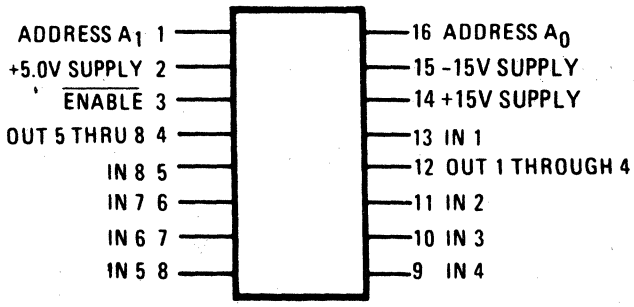

CB37

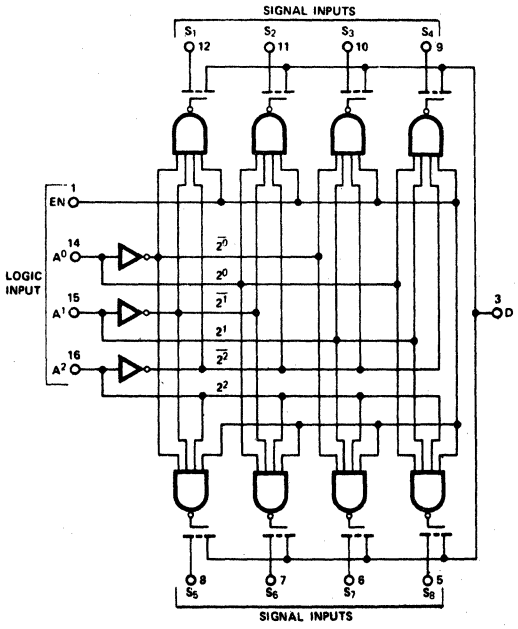

CB48

CB48a AND Logic

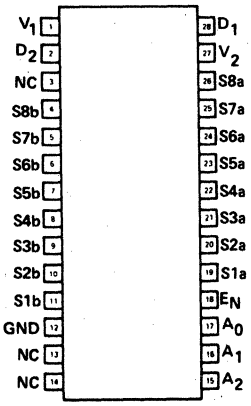

V_1 COMMON TO SUBSTRATE

22. LOGIC/BLOCK DRAWINGS

CB49

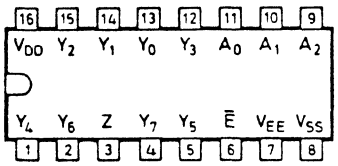

CB50

CB51

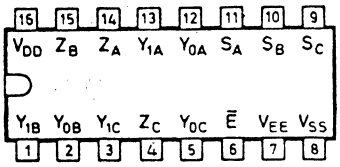

CB52

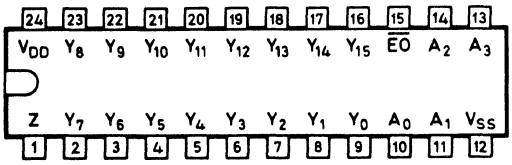

CB56

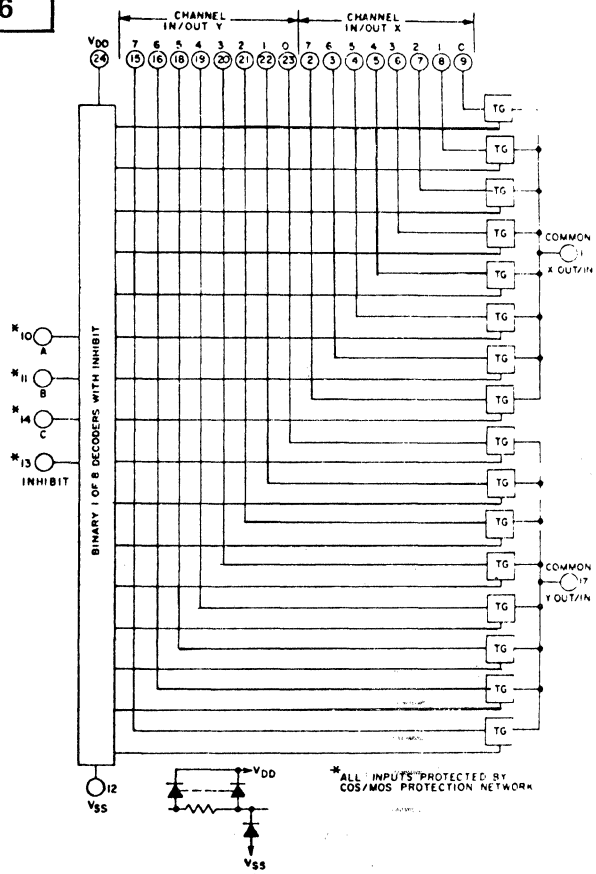

CB66

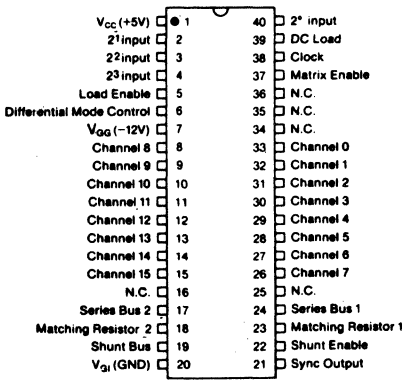

CB47

CB47a AND Logic

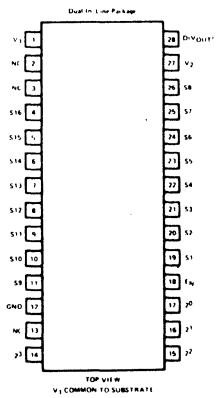

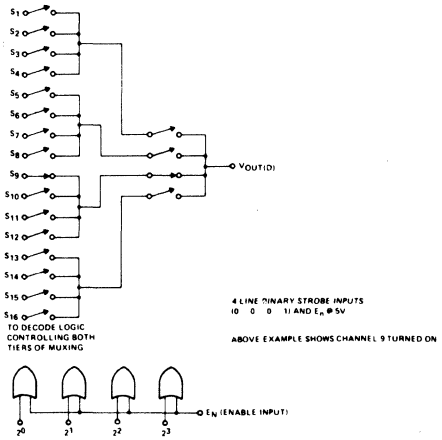

CB74

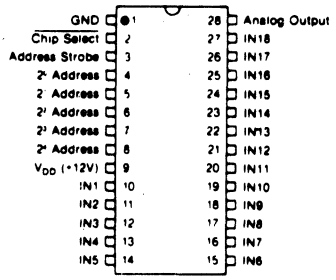

22. LOGIC/BLOCK DRAWINGS

CB75

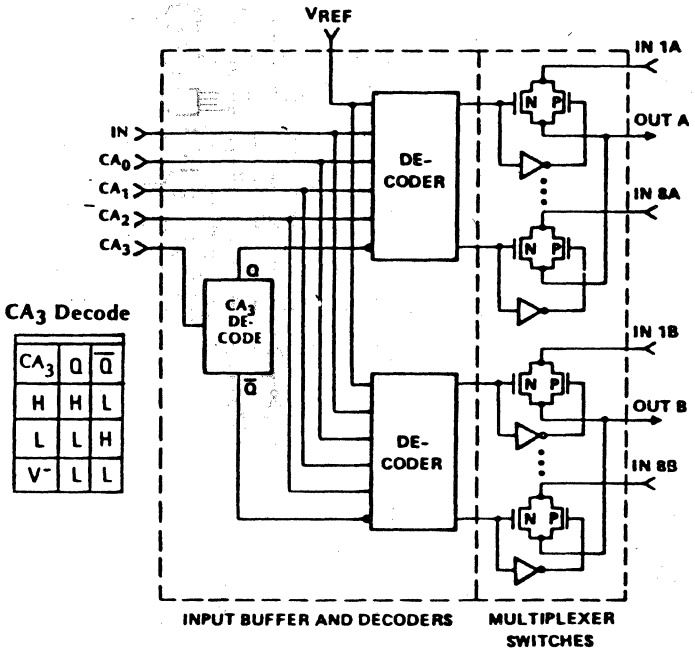

CA3 Decode

CA3	Q	Q̄
H	H	L
L	L	H
V⁻	L	L

CC1

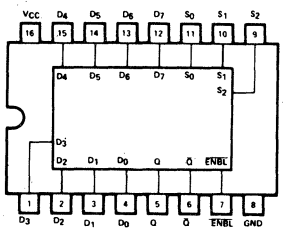

CC11

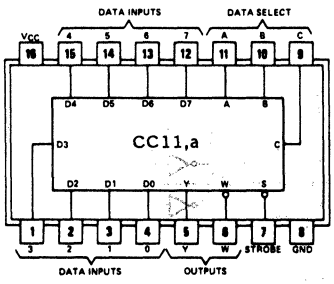

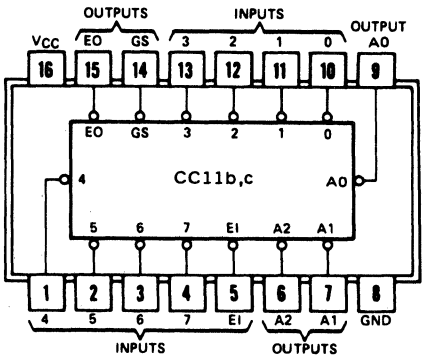

CC13

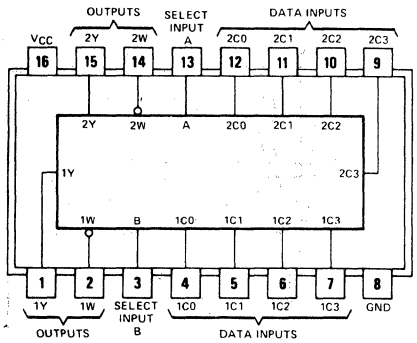

CC17

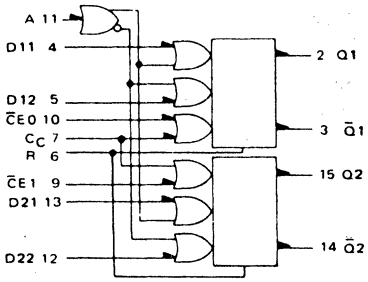

CC18

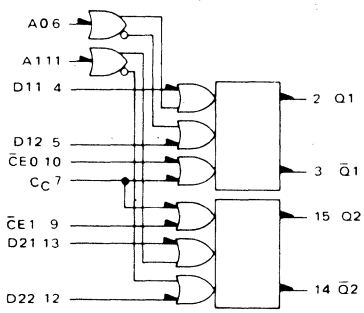

CC25

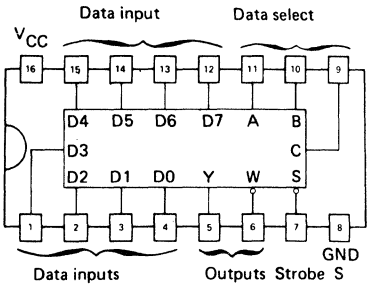

22. LOGIC/BLOCK DRAWINGS

CC28

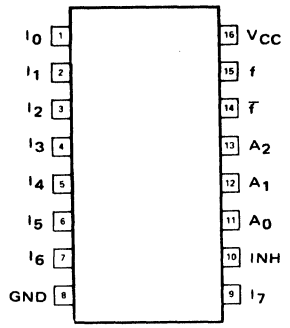

CC29

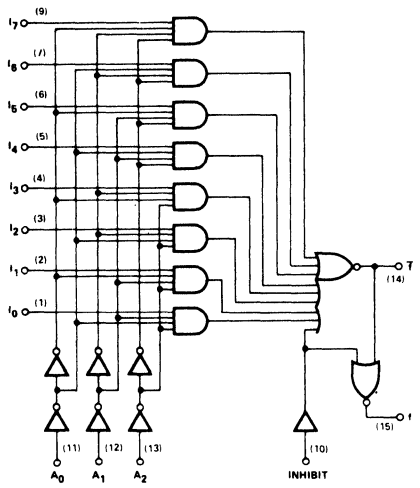

V_{CC} = (16)
GND = (8)
( ) = denotes pin numbers

CC30

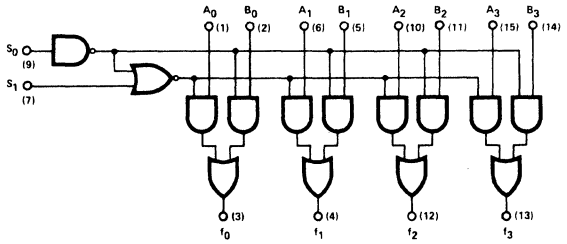

CC32

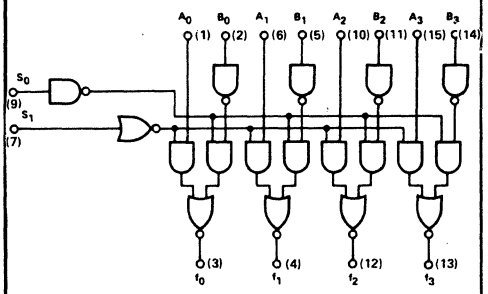

CC33

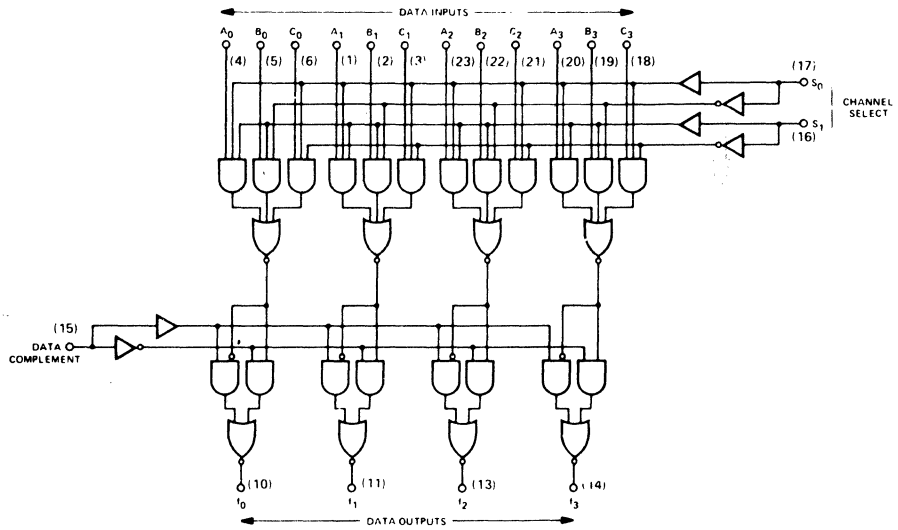

V_{CC} (24)
GND (12)
( ) denotes pin numbers

22. LOGIC/BLOCK DRAWINGS

CC34

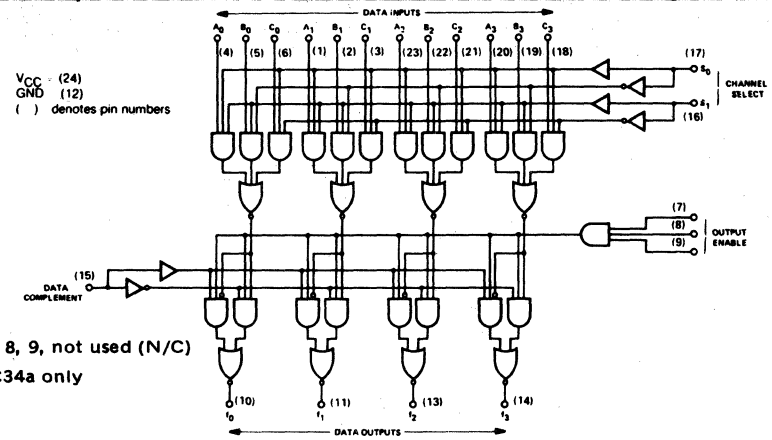

CC34a - Pin 7, 8, 9, not used (N/C) on CC34a only

CC35

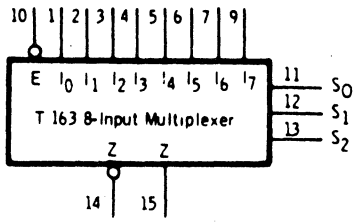

V_{CC} = PIN 16

GND = PIN 8

CC37

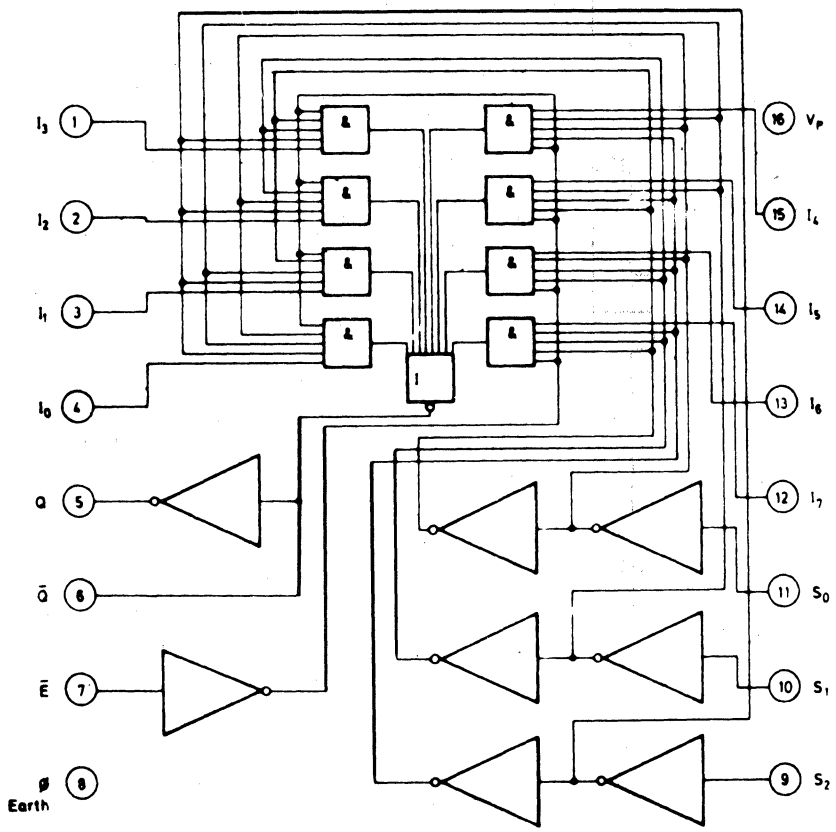

22. LOGIC/BLOCK DRAWINGS

CC42

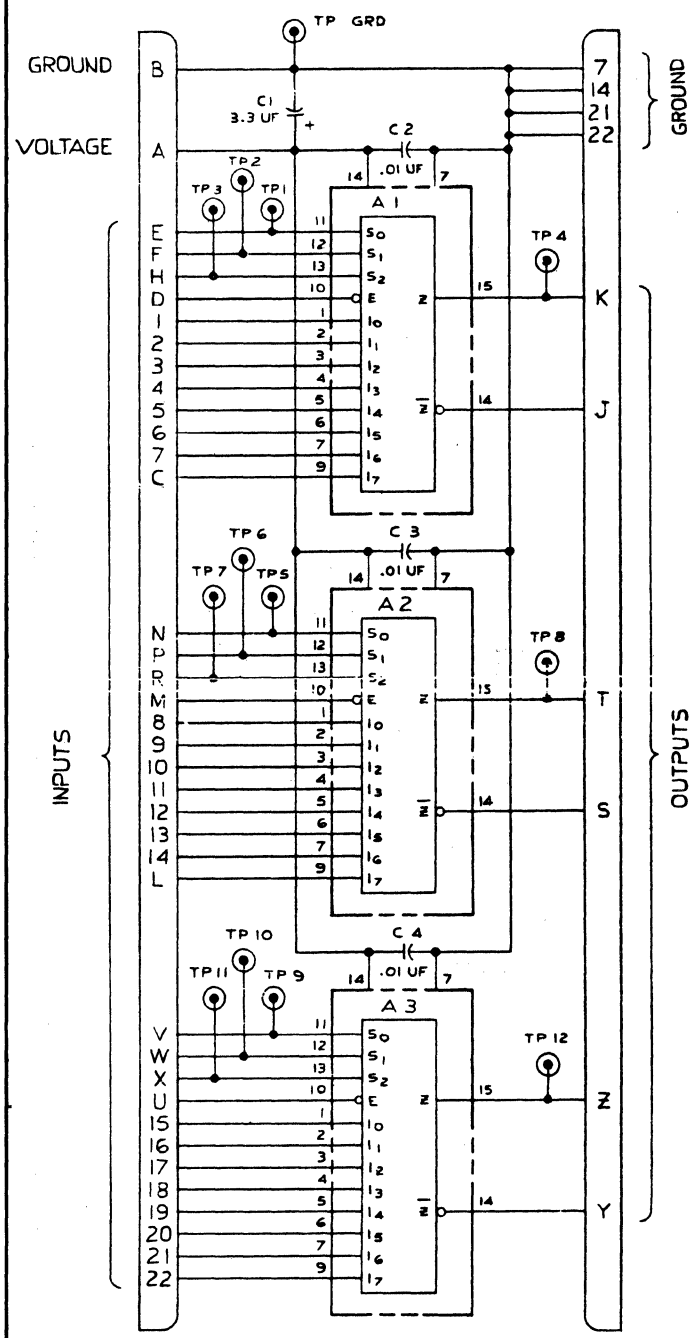

CC43

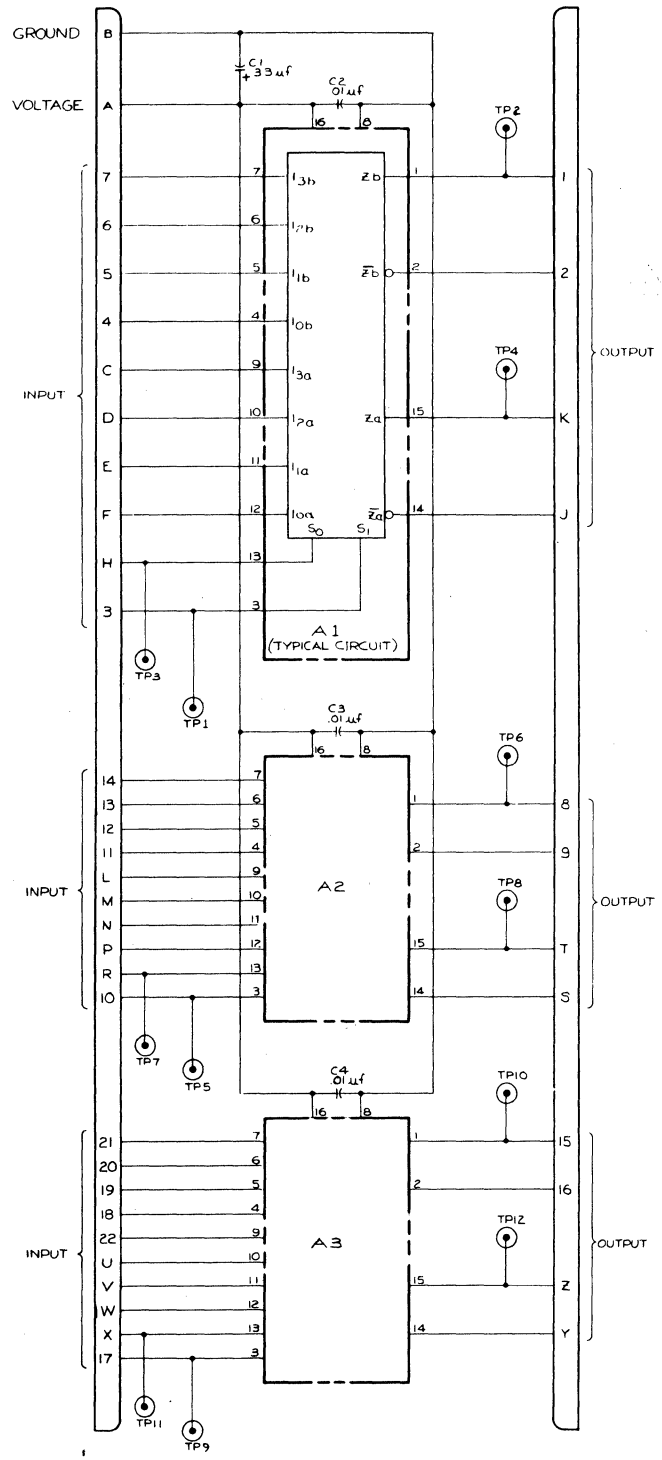

22. LOGIC/BLOCK DRAWINGS

CC45

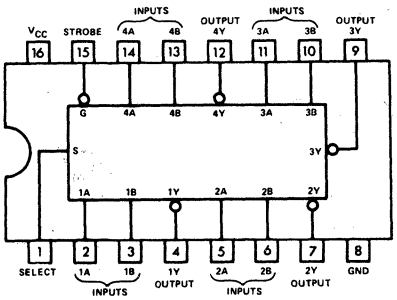

CC46

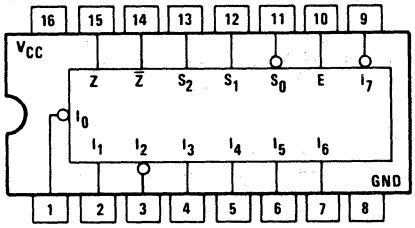

CC48

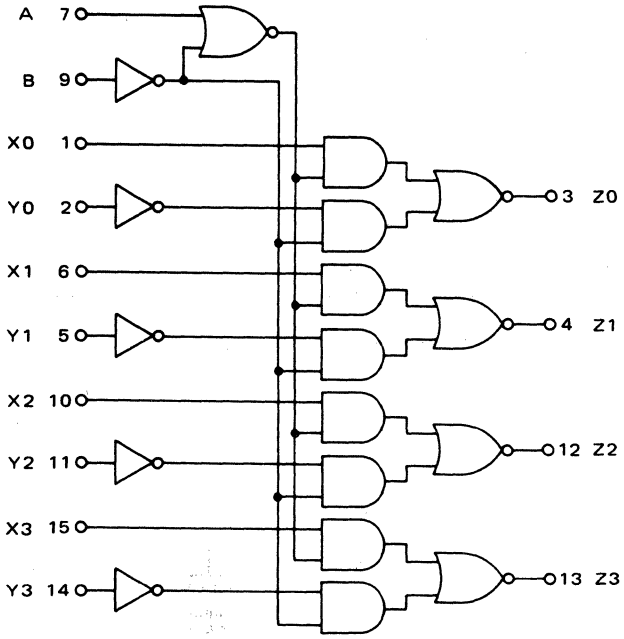

CC50

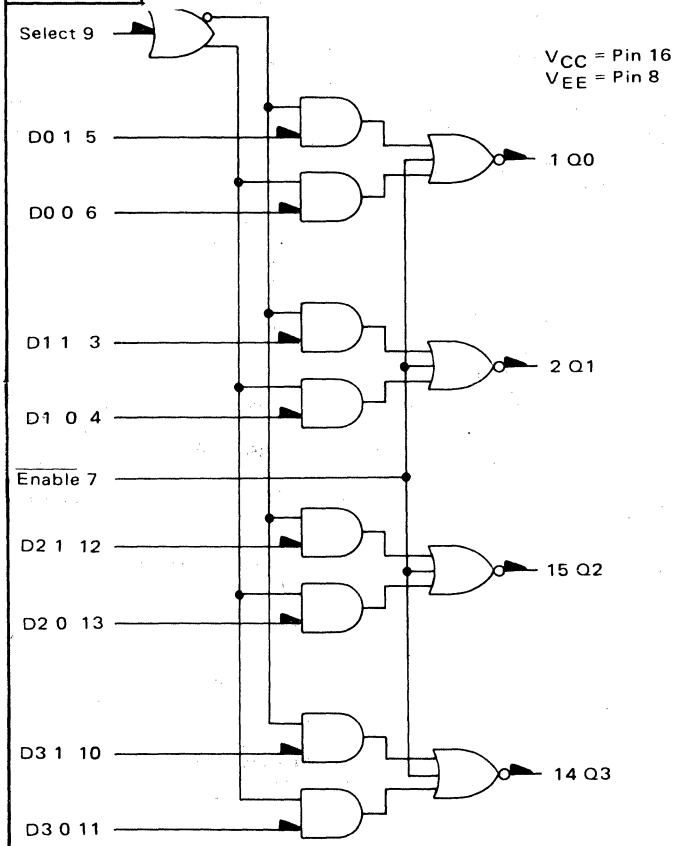

CC51

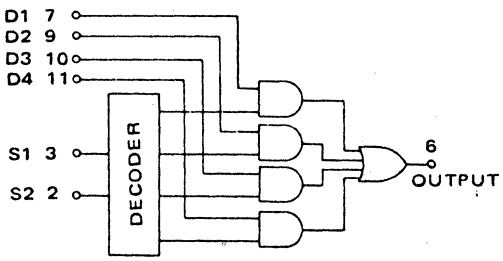

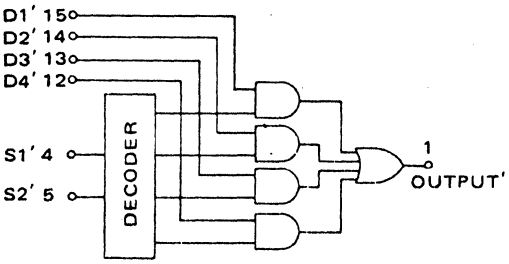

22. LOGIC/BLOCK DRAWINGS

CC52

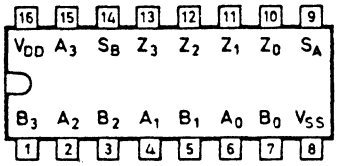

CC53

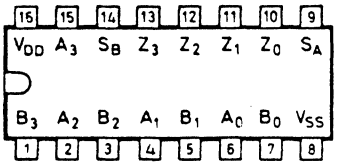

CC61

V_{CC1} = 1 (5)
V_{CC2} = 16 (4)
V_{EE} = 8 (12)
( ) = Flatpak

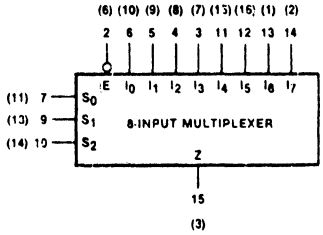

CC62

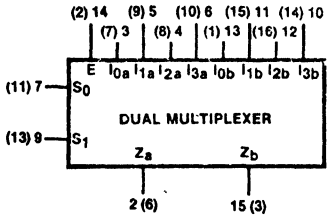

V_{CC1} = 1 (5)
V_{CC2} = 16 (4)
V_{EE} = 8 (12)
( ) = Flatpak

CC63

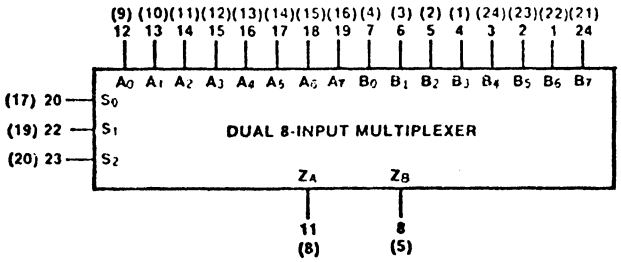

V_{CC} = 9 (6)
V_{CCA} = 10 (7)
V_{EE} = 21 (18)
( ) = DIP

CC64

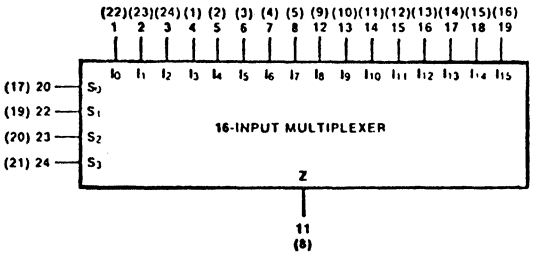

V_{CC} = Pin 9 (6)
V_{CCA} = Pin 10 (7)
V_{EE} = Pin 21 (18)
( ) = DIP

CC65

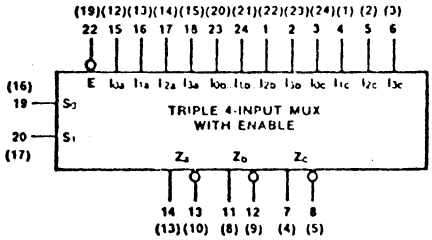

V_{CC} = Pin 9 (6)
V_{CCA} = Pin 10 (7)
V_{EE} = Pin 21 (18)
( ) = DIP

CC69

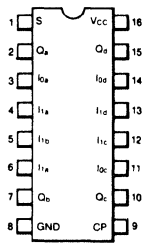

CC69
(TOP VIEW)

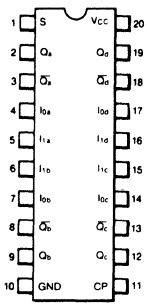

CC69a
(TOP VIEW)

22. LOGIC/BLOCK DRAWINGS

CC75

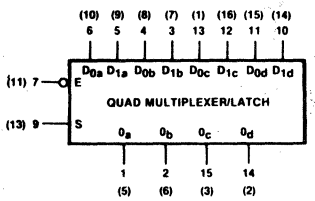

V_{CC} = 16 (4)
V_{EE} = 8 (12)
( ) = Flatpak

CC77

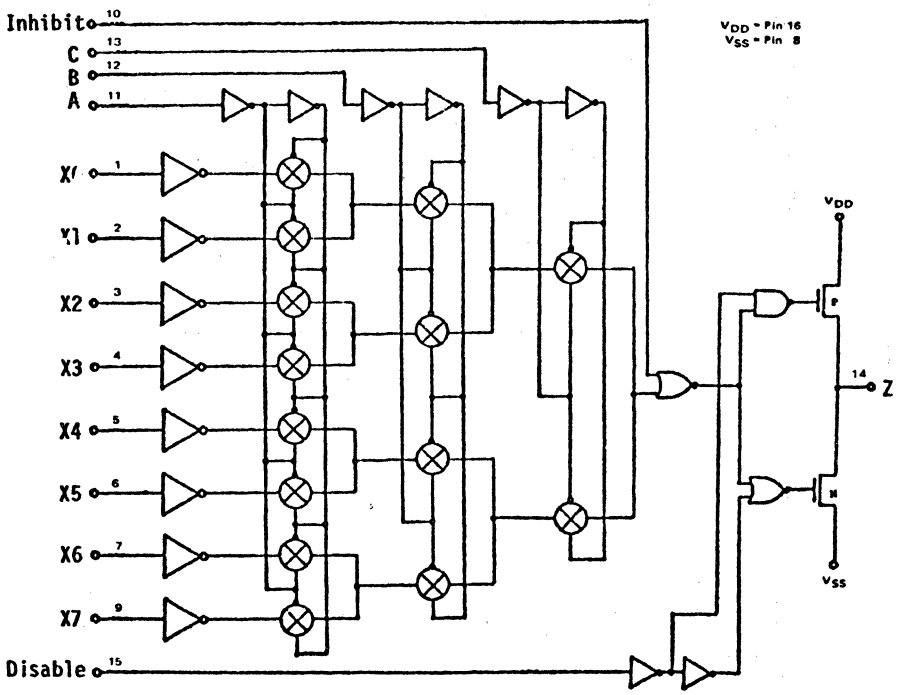

CD12

V_{CC1} = Pin 1(5)
V_{CC2} = Pin 16 (4)
V_{EE} = Pin 8 (12)
( )=FLATPACK

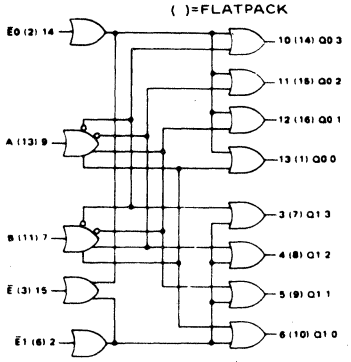

CD12a - outputs are complements of CD12 outputs

CD17

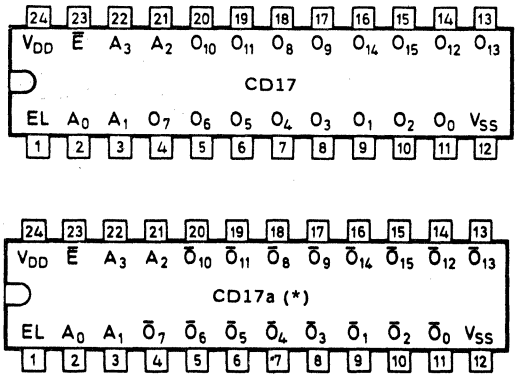

CD22

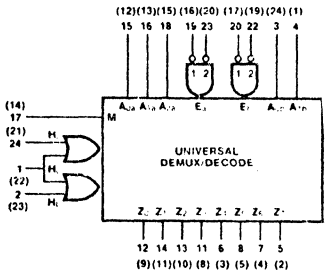

CD22

Dual 1-of-4 Application

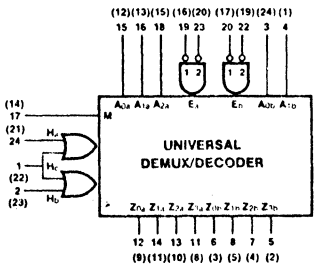

CD22a

CD26

CD26a - Outputs Q0 - Q7 are compliments of CD26 outputs

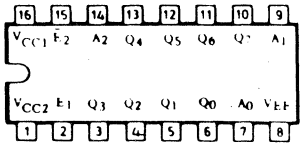

CD50

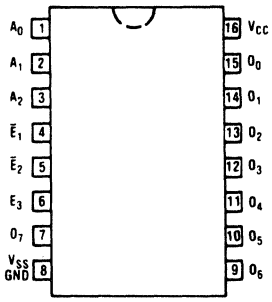

22. LOGIC/BLOCK DRAWINGS

CD51

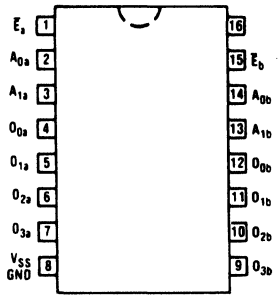

CD52

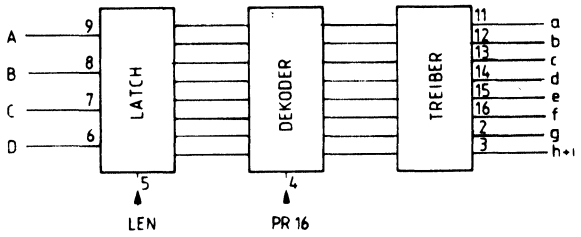

CD53

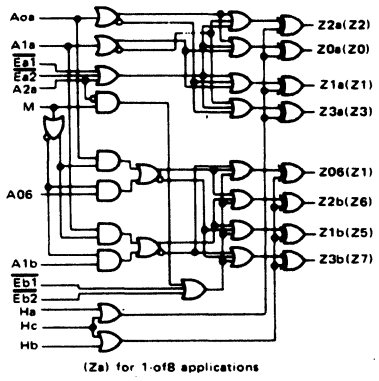

CD58

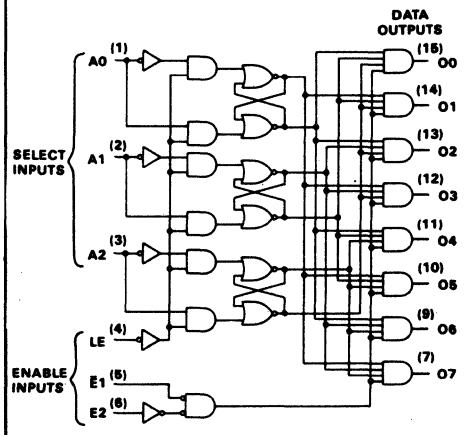

CD59

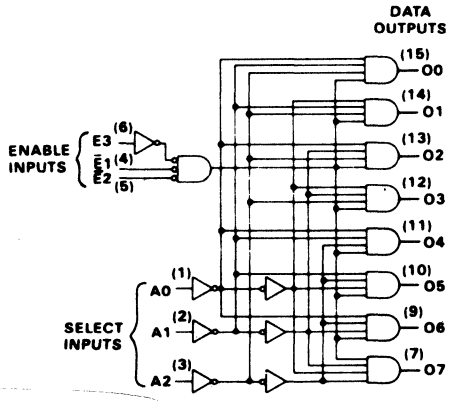

CD3a

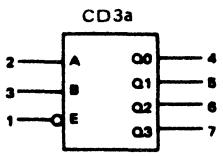

22. LOGIC/BLOCK DRAWINGS

DA1

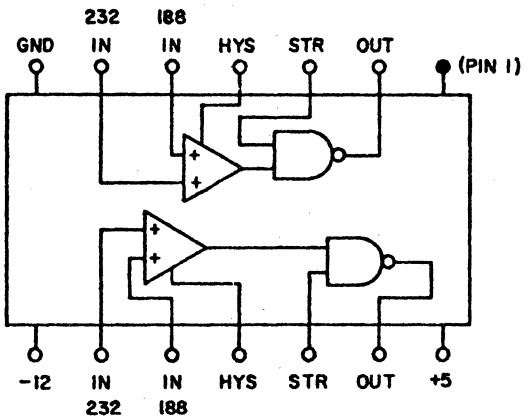

DA2

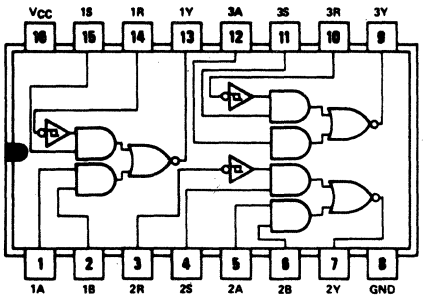

DA3

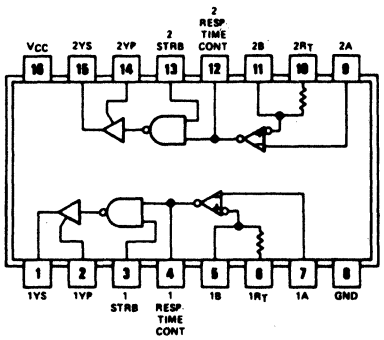

DA4

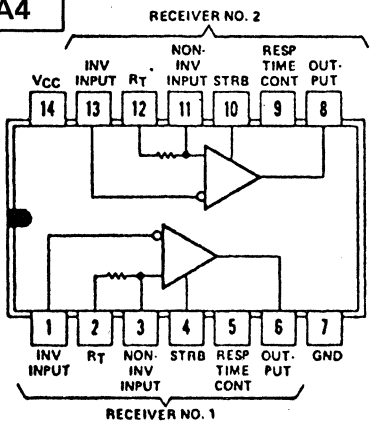

DA5

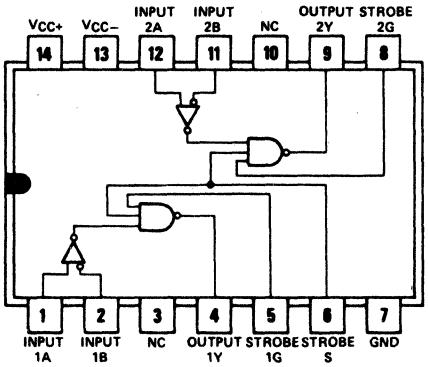

DA5 — HAS STANDARD INPUT TRANSISTORS
DA5a — HAS INPUT PROTECTION DIODES
DA5b — HAS SCHOTTKY INPUT TRANSISTORS

DA7

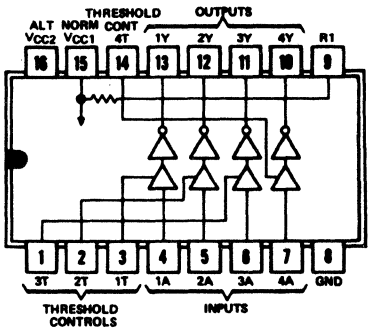

DA8

DA8a - R1=10kΩ

DA8b - R1=2kΩ

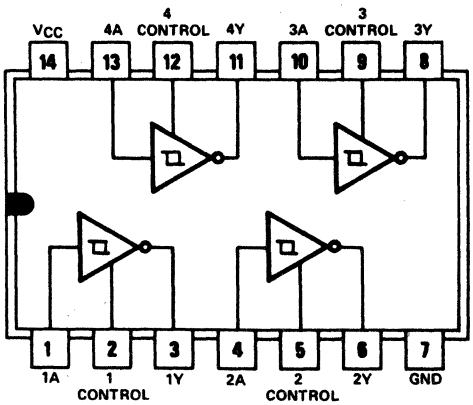

DA9

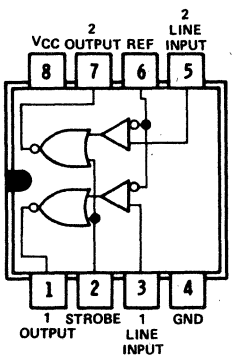

22. LOGIC/BLOCK DRAWINGS

DA10

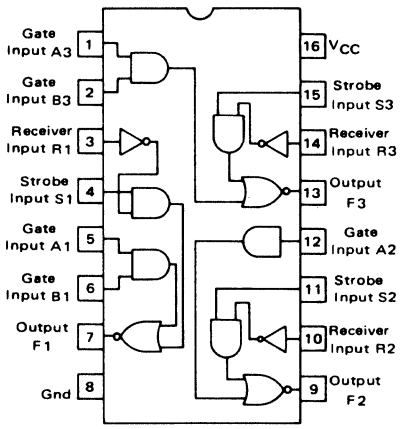

DA21

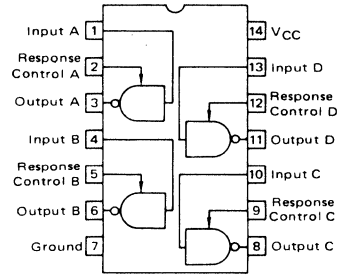

DA23

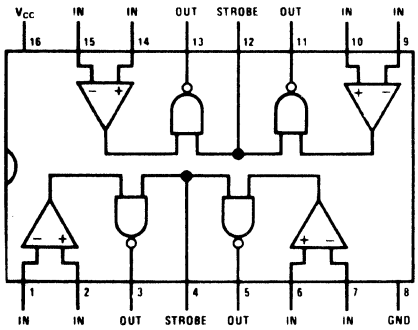

DA24

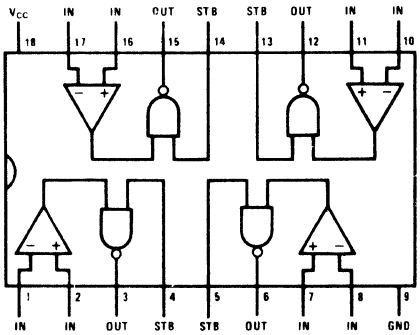

DA28

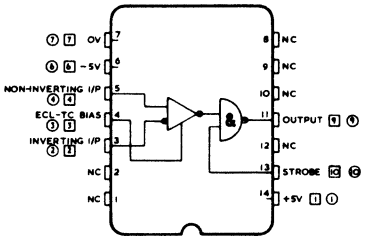

DA29

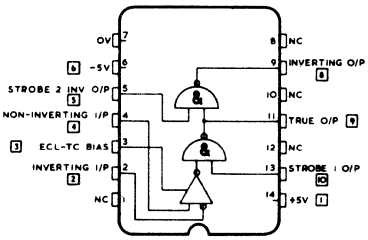

DA31

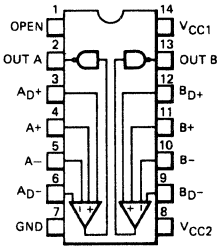

DA32

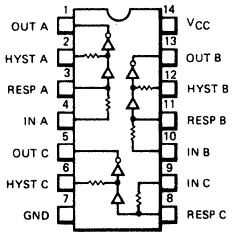

DA33

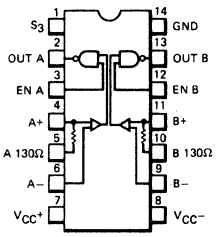

DA35

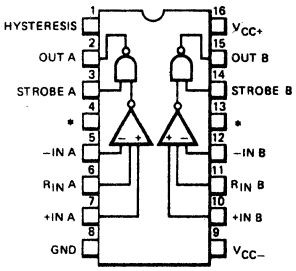

22. LOGIC/BLOCK DRAWINGS

DA36

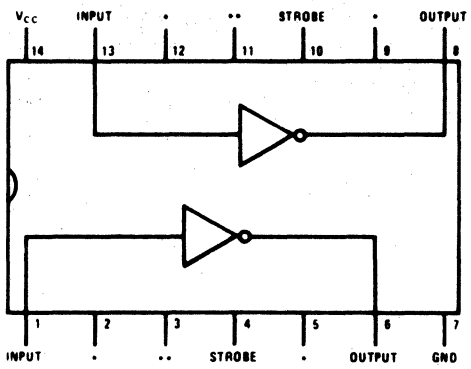

*Make no connections to these pins.
** For operation requiring "Mark Hold" with input open connect a 470 Ω resistor from each of these pins to ground.

DA37

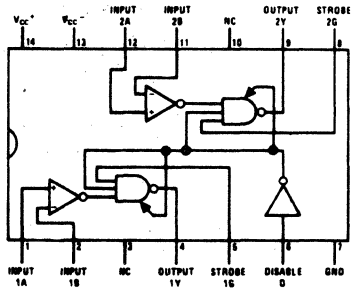

DA39

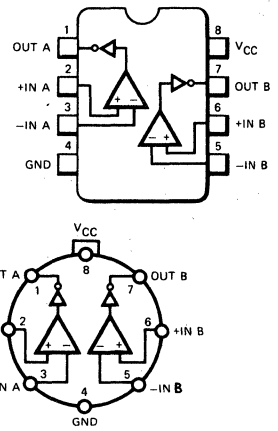

DA40

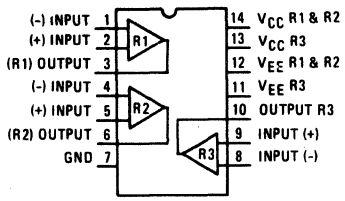

DA40a - Open collector Outputs
DA40b - Does not have 50 Ω input termination resistors.

DA43

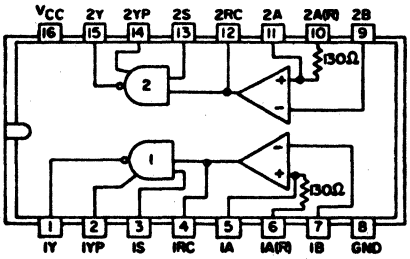

DA47

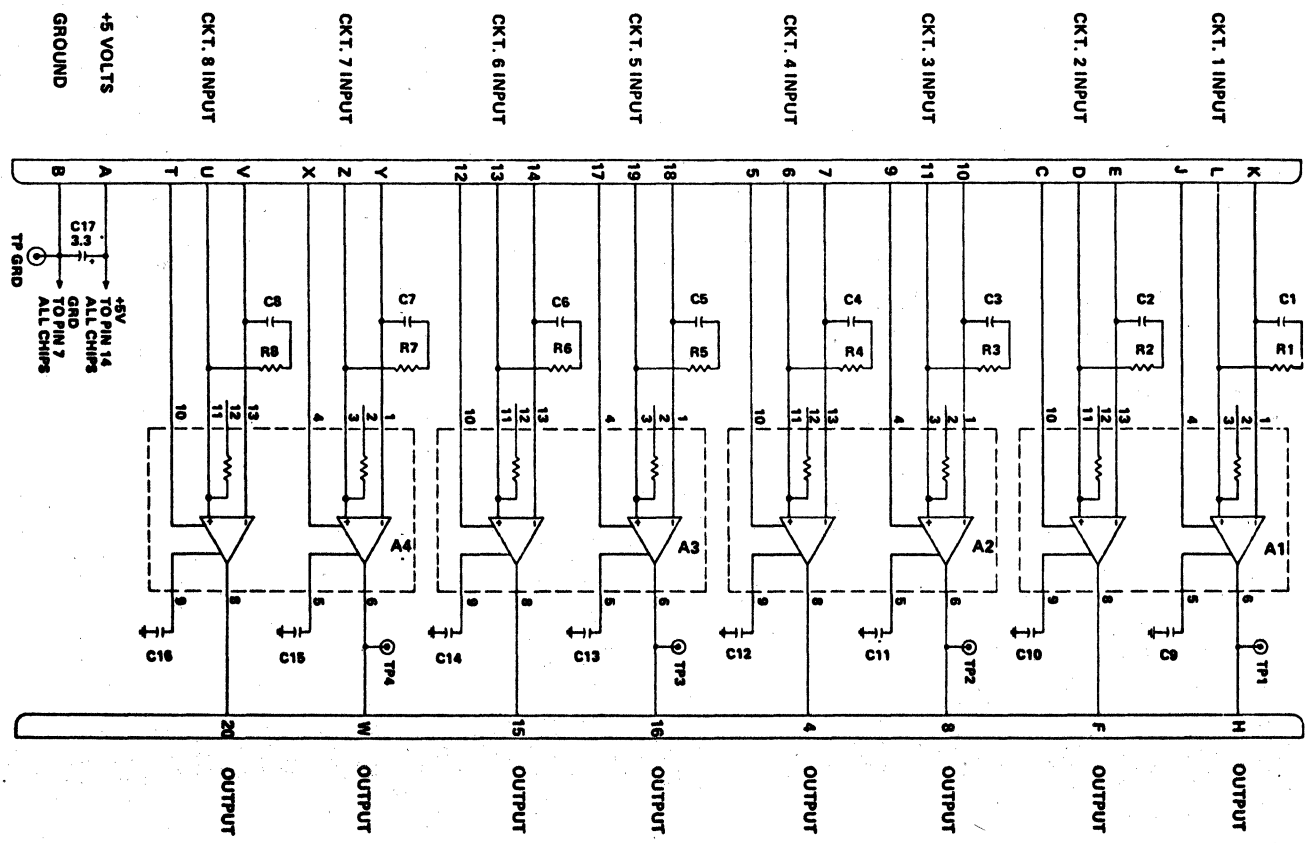

22. LOGIC/BLOCK DRAWINGS

DA48

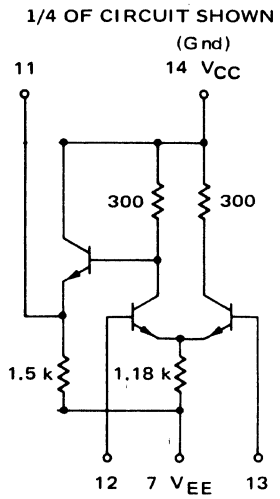

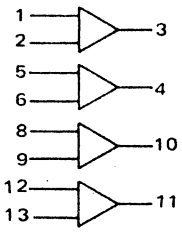

V_{CC}(GND) — PIN 14
V_{EE} — PIN 7

DA49

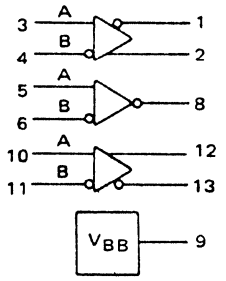

V_{CC}(GND) — PIN 14
V_{EE} — PIN 7

DA53

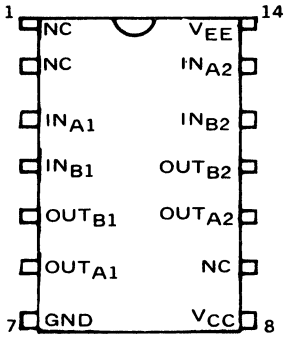

NC=NO CONNECTION

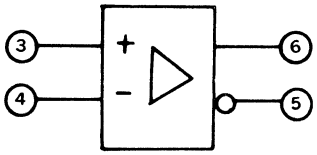

ELEMENT 1

V_{CC}: PIN 14
GND: PIN 7

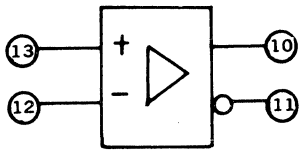

ELEMENT 2

DA54

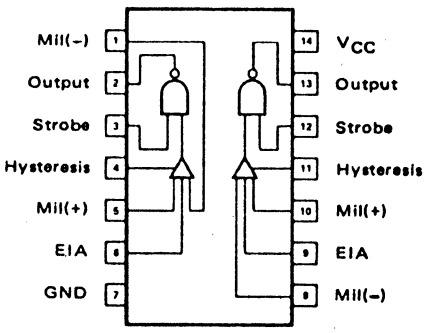

DA55

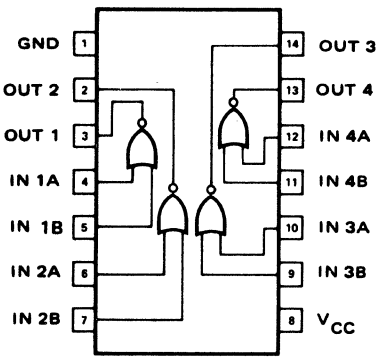

DA56

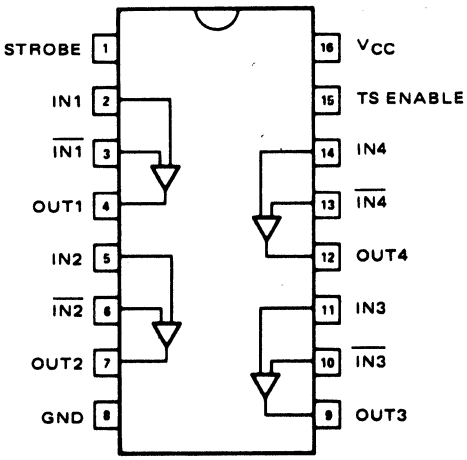

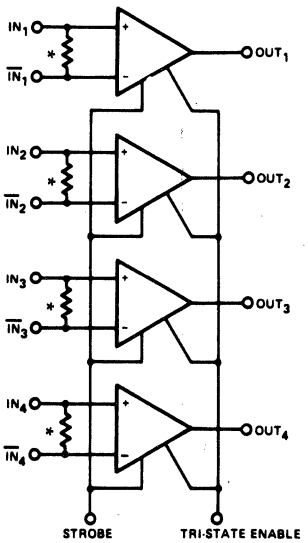

DA56a: * — OPTION INTERNALLY CONNECTED

22. LOGIC/BLOCK DRAWINGS

DA57

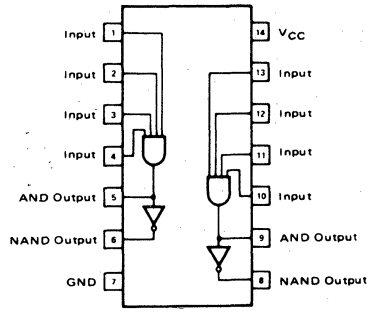

DA60

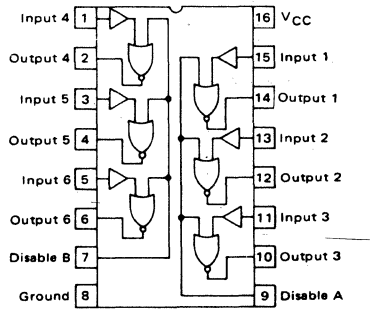

DA62

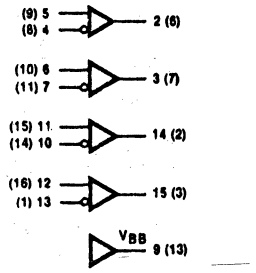

( ) = Flatpak

DA63

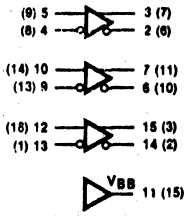

( ) = Flatpak

DA64

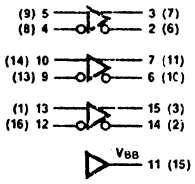

V_{CC1} = Pin 1 (5)
V_{CC2} = Pin 16 (4)
V_{EE} = Pin 8 (12)
( ) = Flatpak

DA68

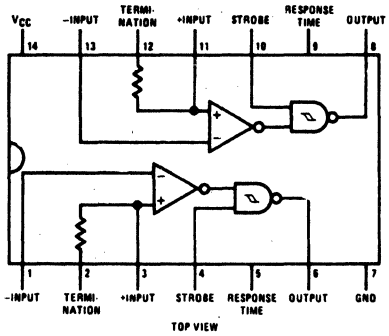

DA70

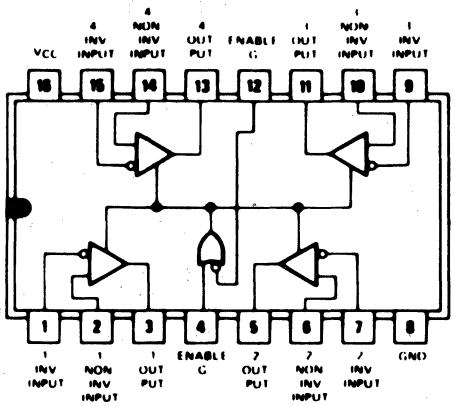

DA72

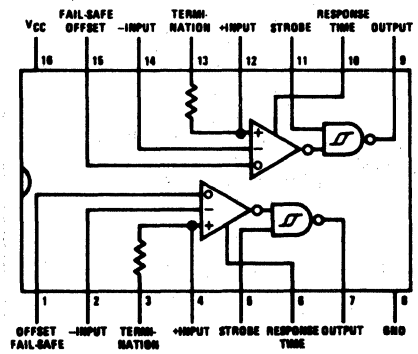

DA73

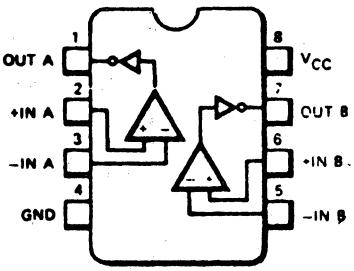

22. LOGIC/BLOCK DRAWINGS

DB8

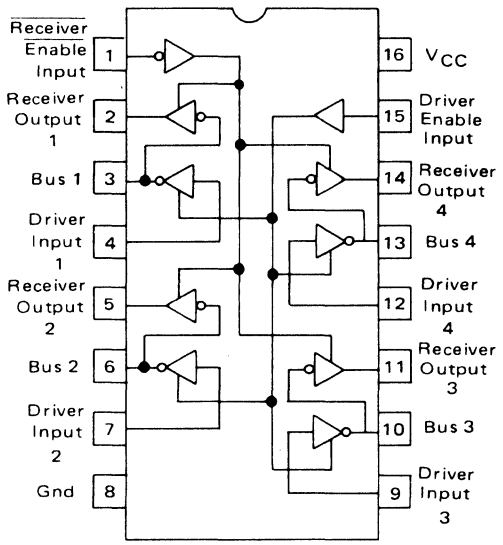

DB8a is Non Inverting Version

DB12

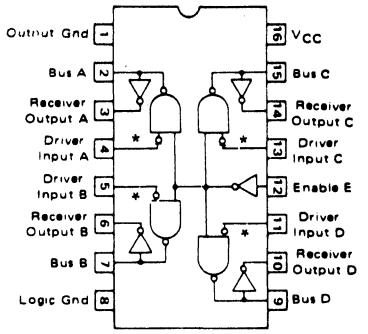

* INVERTERS FOR DB12a ONLY

DB14

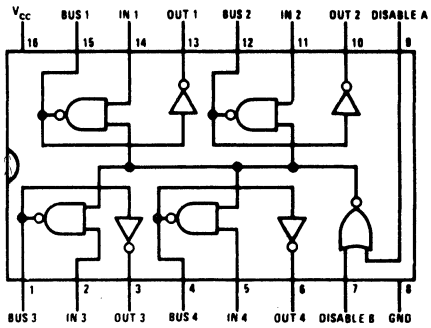

DB15

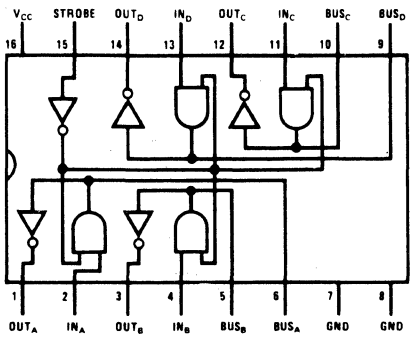

DB17

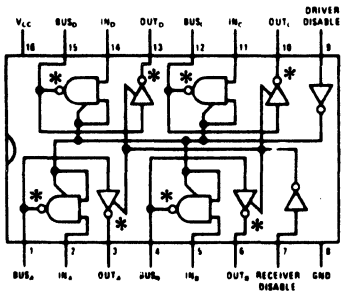

DB17a - * Inverters for DB17 only

DB18

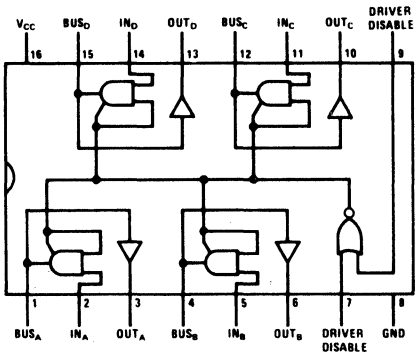

DB19

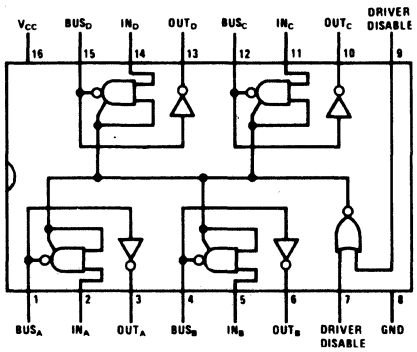

DB28

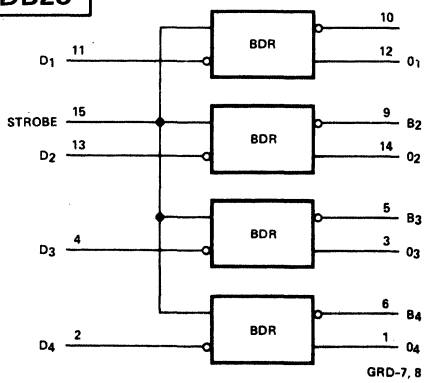

GRD-7, 8
VCC-16

DB32

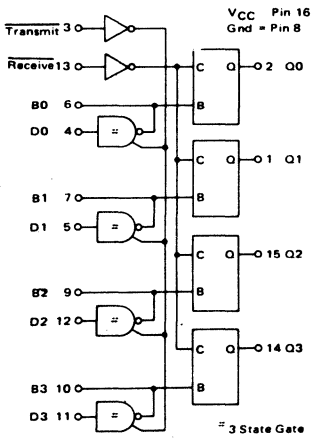

22. LOGIC/BLOCK DRAWINGS

DB36

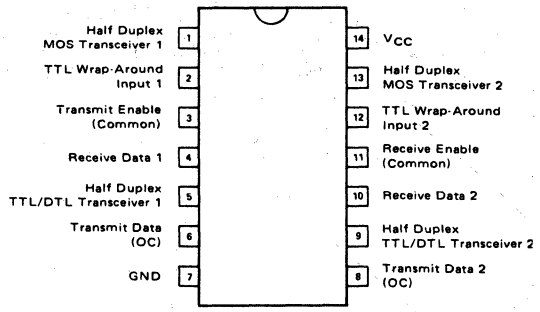

DB37

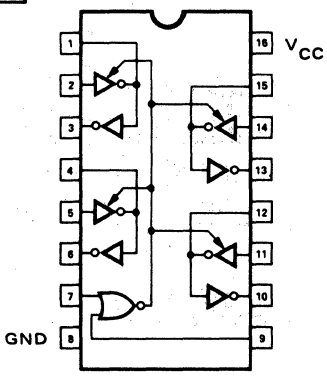

DB38

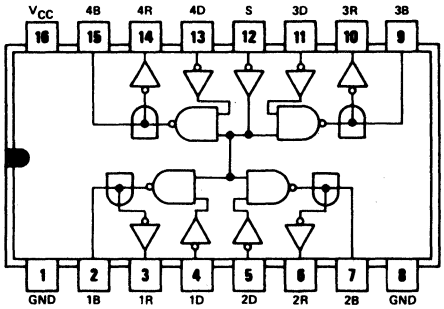

DB39

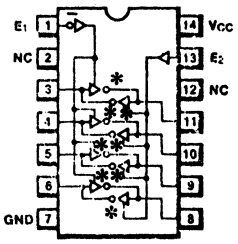

NOTE:
The Flatpak version has the same pinouts (Connection Diagram) as the Dual In-Line Package.

DB39a - * Inverters for DB39 only
DB39a is Non Inverting Version.

DB50

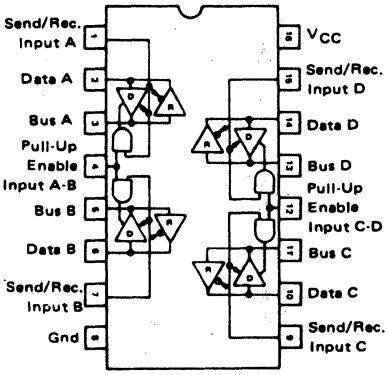

DB74

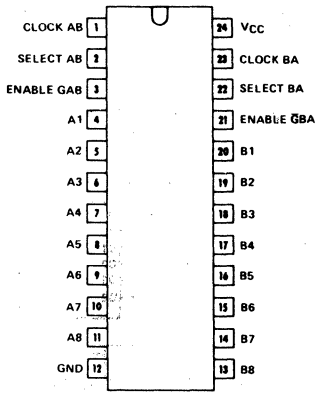

3-State Outputs

DC2

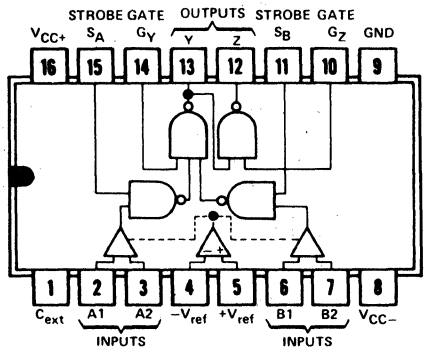

DC3

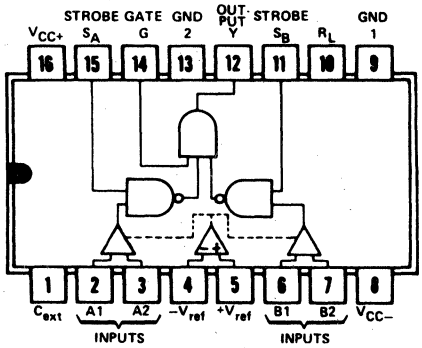

DC5

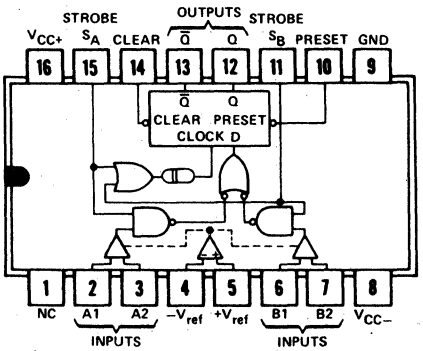

DC5b

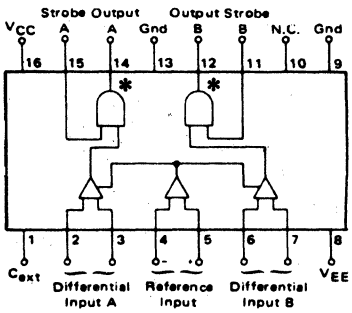

DC5a - outputs inverted for DC5a

22. LOGIC/BLOCK DRAWINGS

DC6

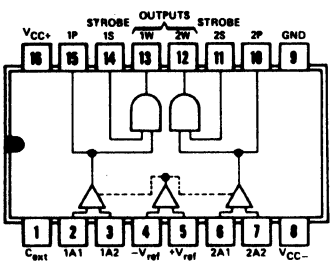

DC7

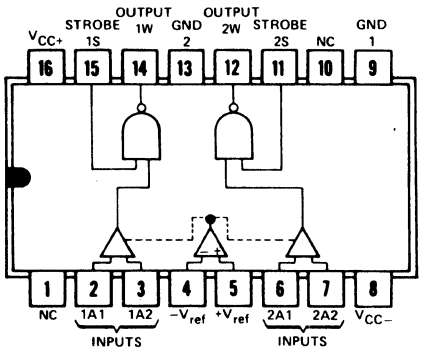

DC7a - Outputs 1W and 2W are not inverted

DC8

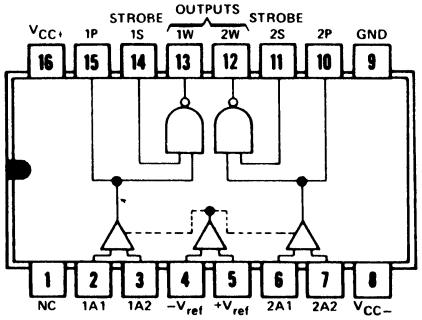

DC8a - Outputs 1W and 2W are not inverted

DC1

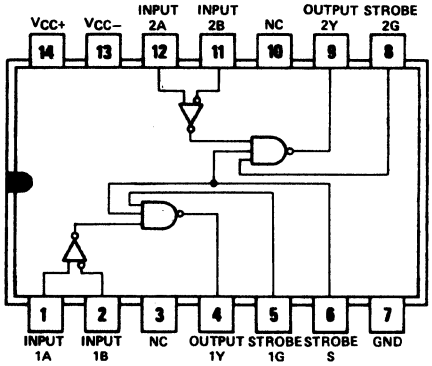

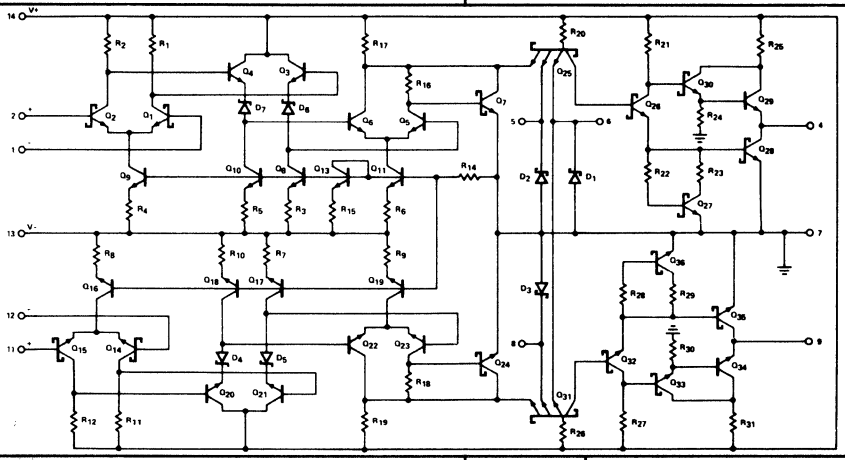

DC1b

DC9

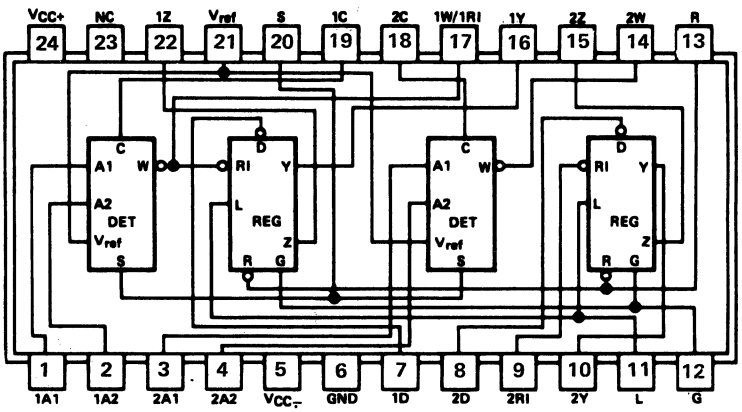

DC10

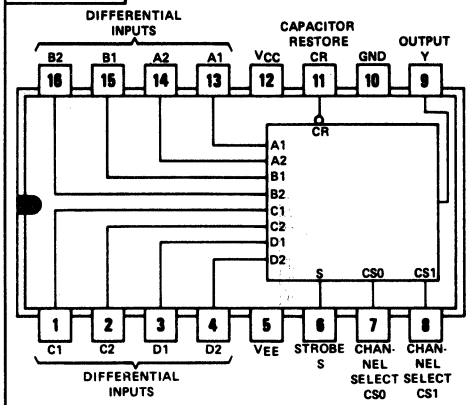

DC11

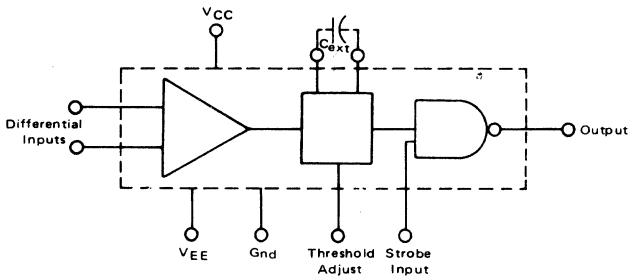

DC12

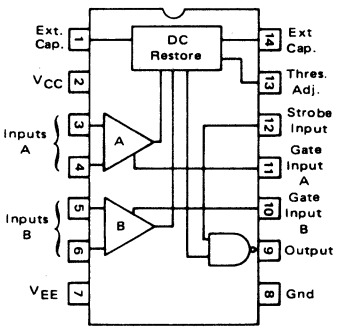

22. LOGIC/BLOCK DRAWINGS

DC13

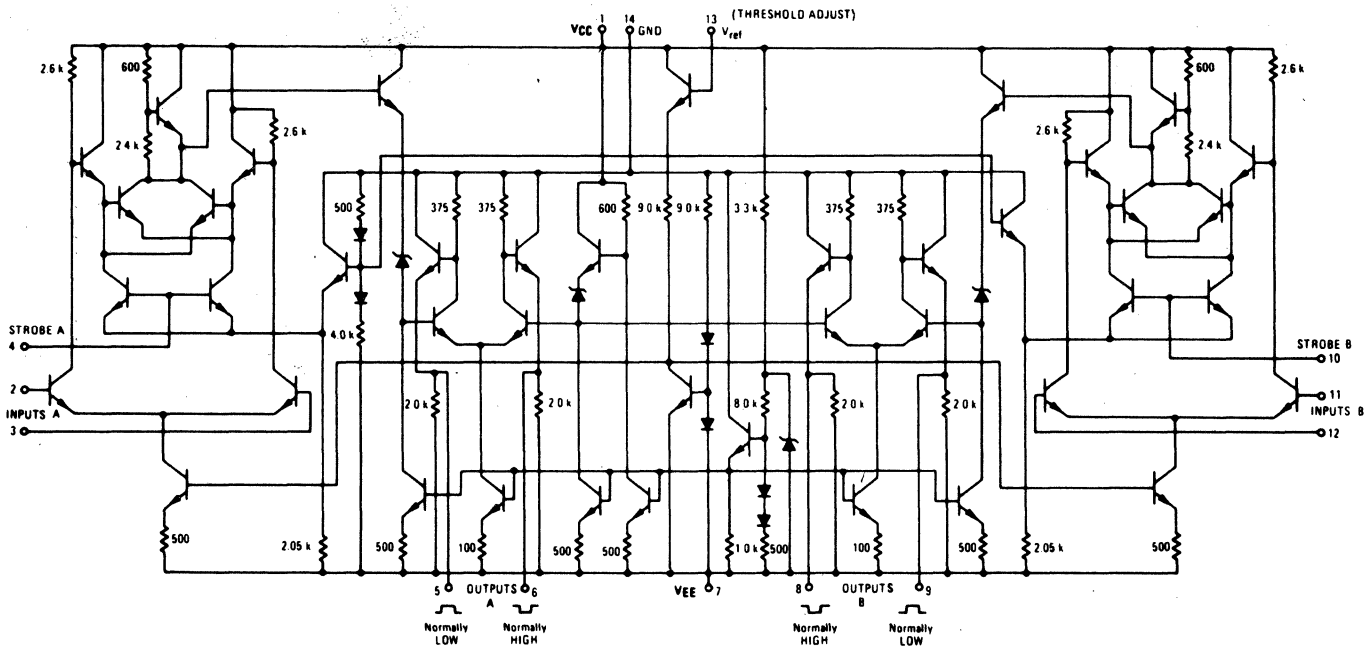

DC14

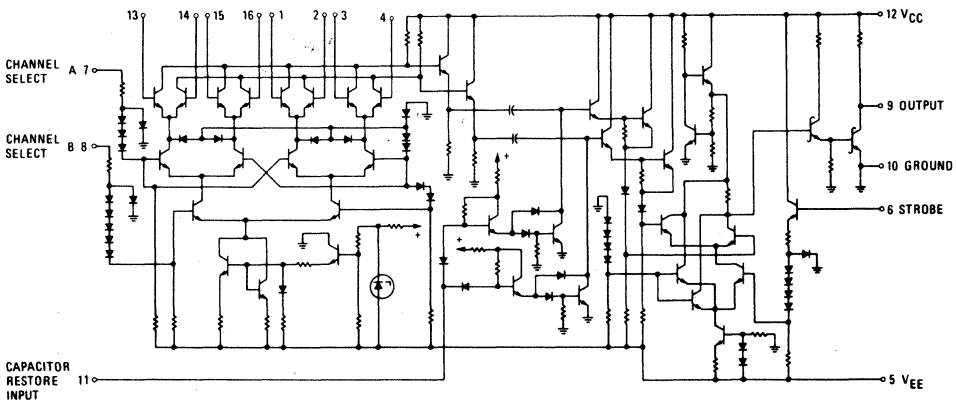

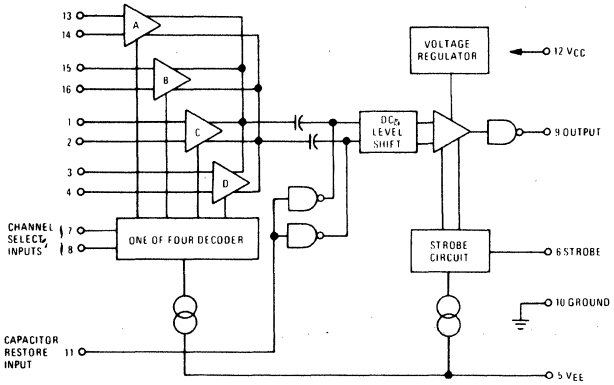

22. LOGIC/BLOCK DRAWINGS

DC15

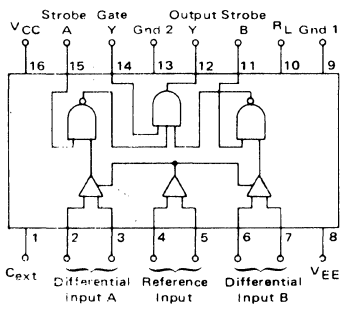

DC20

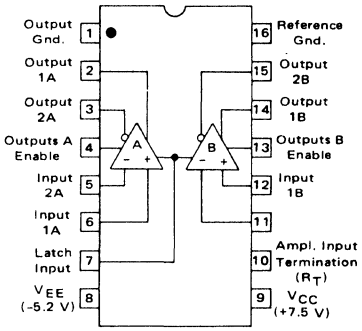

DC23

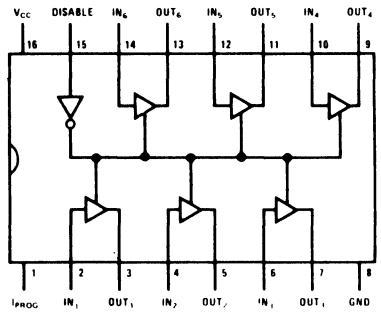

DC24

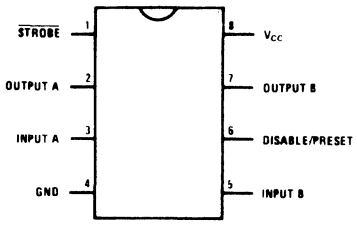

DC25

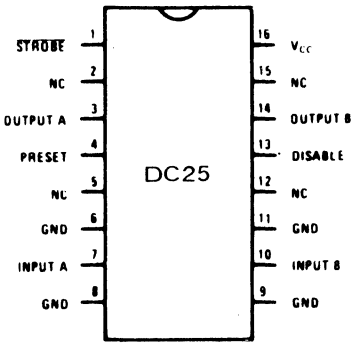

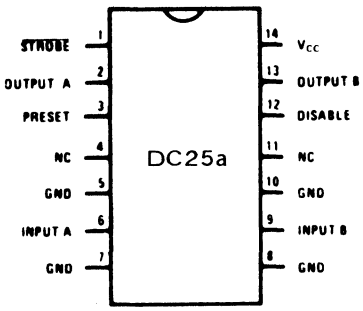

DC27

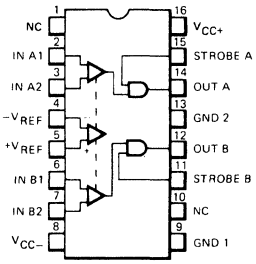

DC36

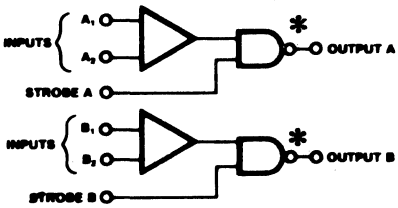

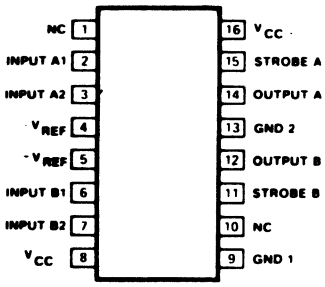

DC36a - * Inverters for DC36 only

DD3

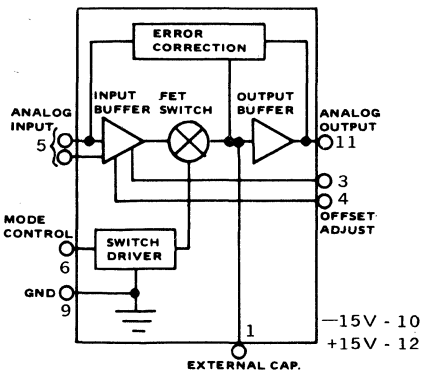

DD9

* DD9a - Pins 10 & 12 N/C

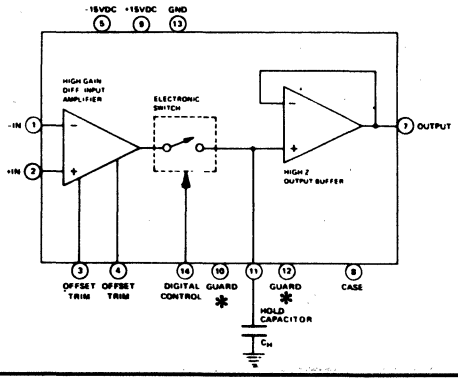

DD33

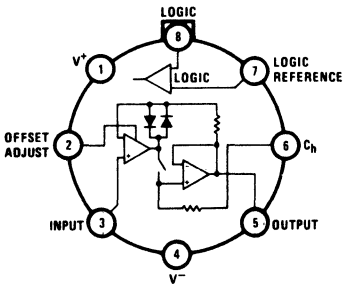

22. LOGIC/BLOCK DRAWINGS

DD45

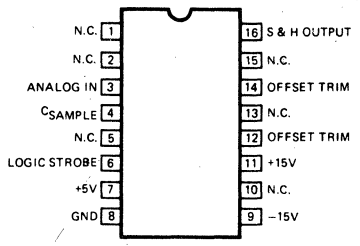

DD54

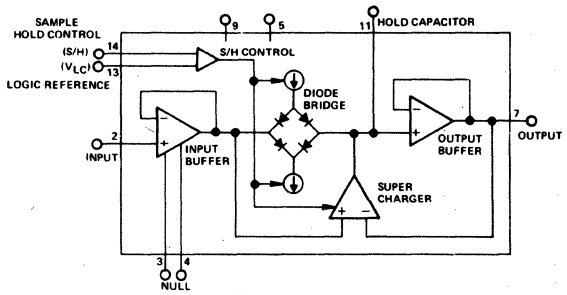

DE1

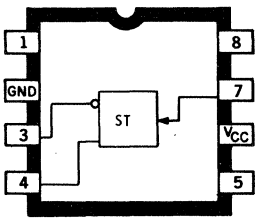

DE2

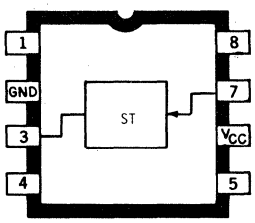

DE3

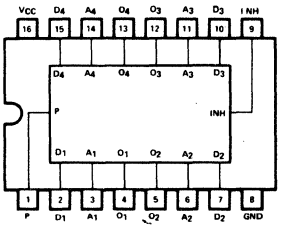

DE3a

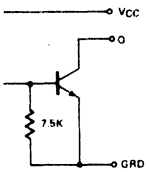

DE6

DE6a - Nor version of DE6

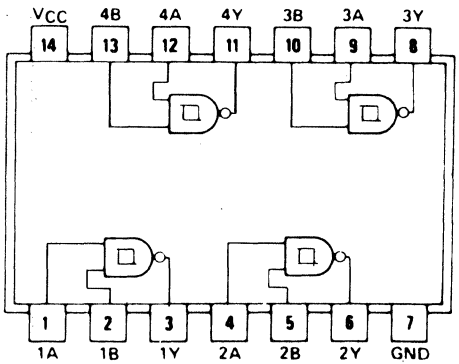

DE14

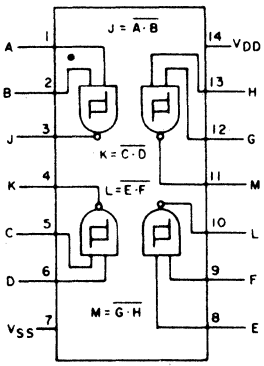

DE22

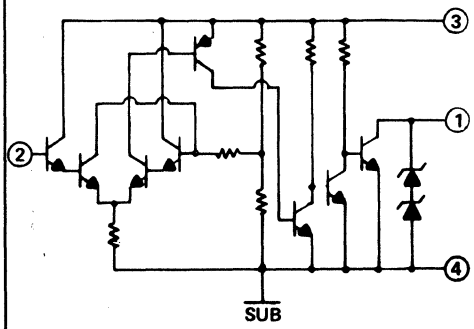

DE23

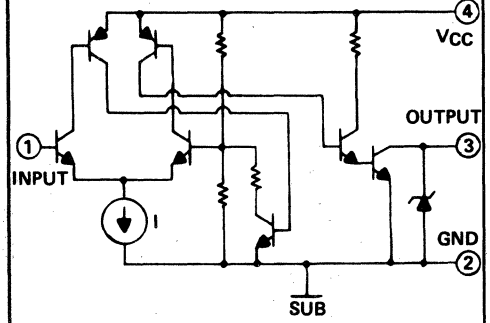

DE33

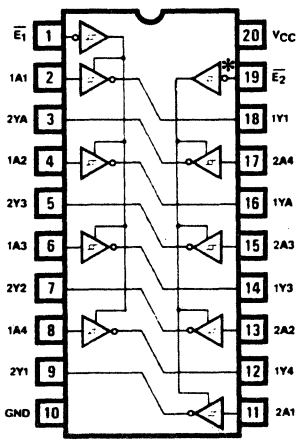

DE33a - * Inverter DE33 only

DE35

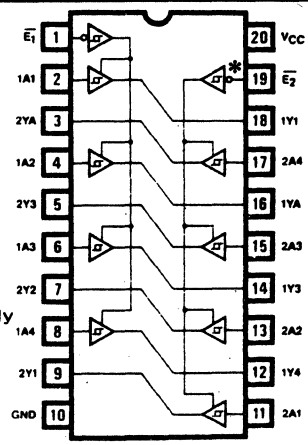

DE35a - * Inverter for DE35 only

22. LOGIC/BLOCK DRAWINGS

E1-11

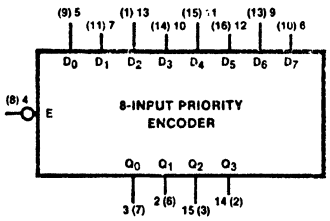

V_{CC1} = Pin 1 (5)
V_{CC2} = Pin 16 (4)
V_{EE} = Pin 8 (12)
() = Flatpak

E1-12

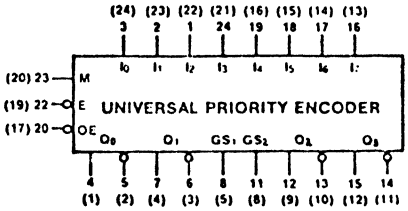

V_{CC} = Pin 9 (6)
V_{CCA} = Pin 10 (7)
V_{EE} = Pin 21 (18)
( ) = DIP

E2-5

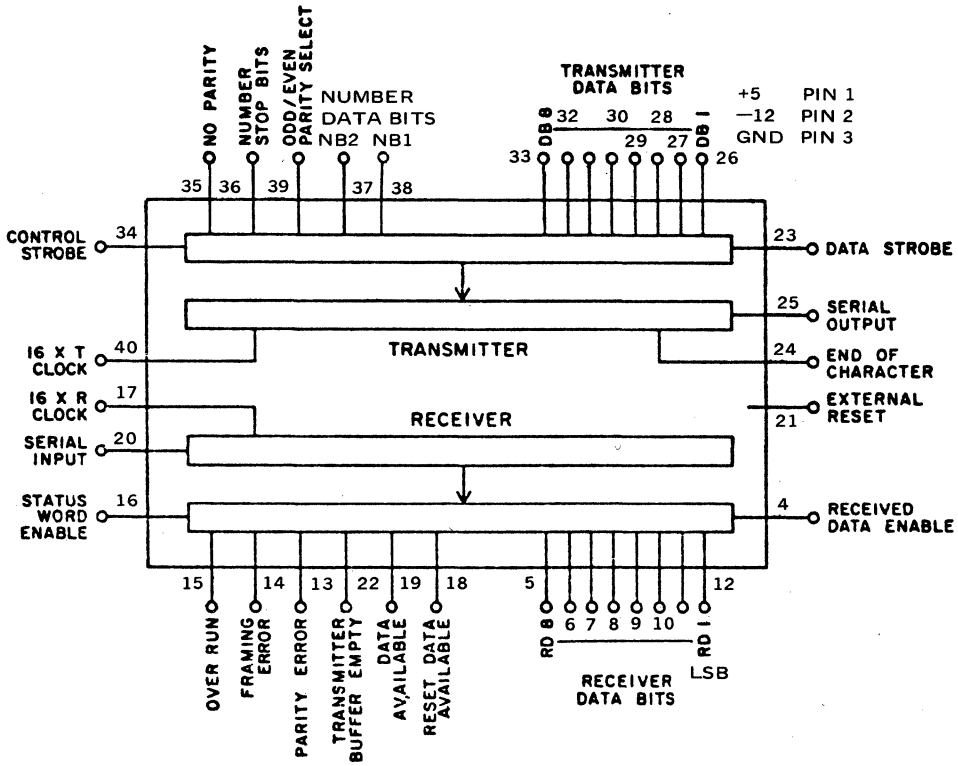

E2-8

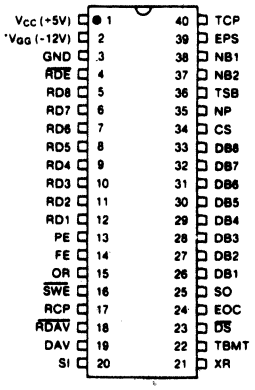

* E2-8A PIN 2: NO CONNECTION

E2-9

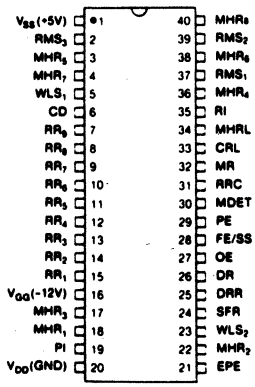

22. LOGIC/BLOCK DRAWINGS

E2-10

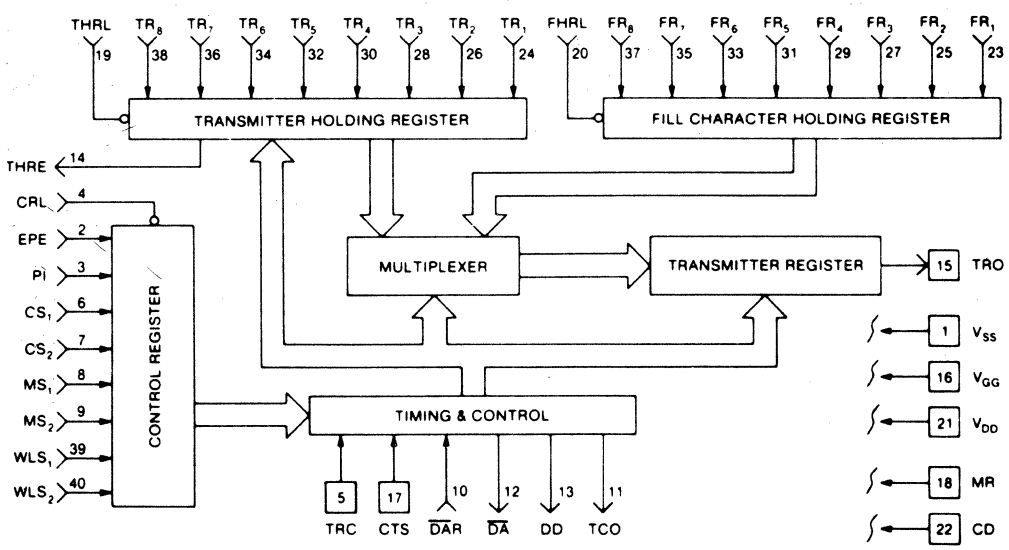

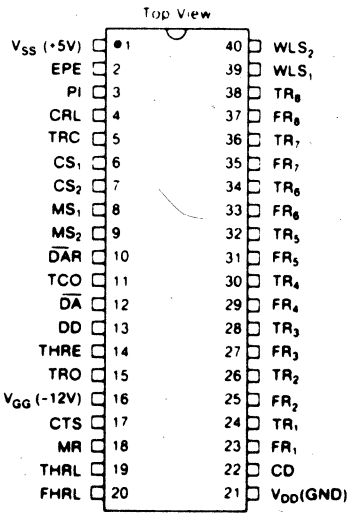

E2-15

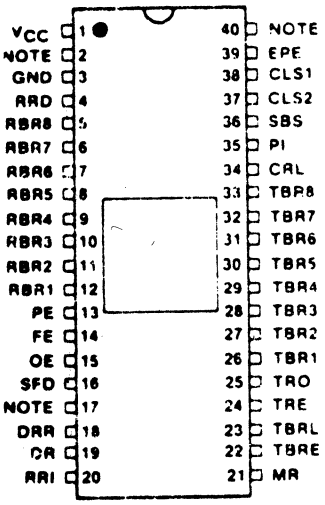

PIN	IM6402	IM6403
2	N C	CONTROL
17	RRC	OSC IN
40	TRC	OSC OUT

22. LOGIC/BLOCK DRAWINGS

E3-4

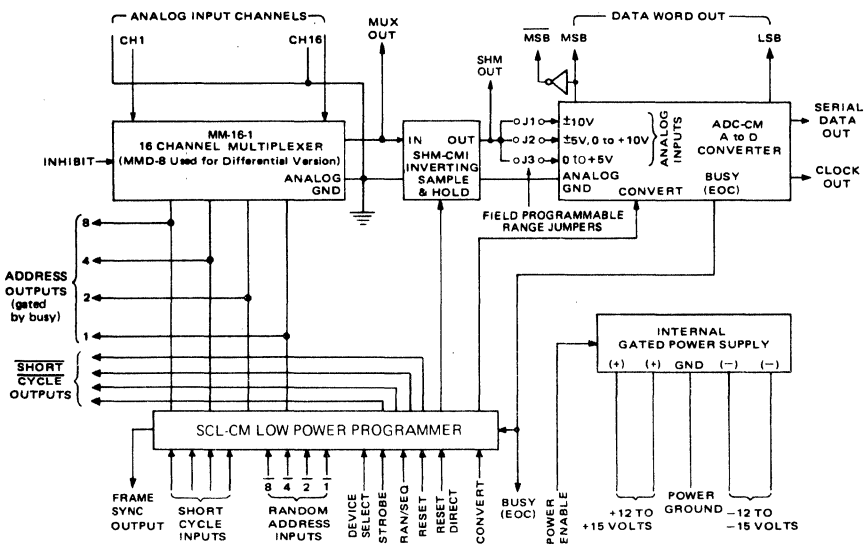

FUNCTION	PIN	PIN	FUNCTION
-15VDC A/D Cont. Pwr	A1	B1	+15V Pwr. A/D & Mux.
-15V S/H,Mux Cont Pwr	A2	B2	+15V Pwr. SCL-CM & A/D
Analog Power Gnd	A3	B3	Analog Signal Gnd
Analog In 1 LO/In 2	A4	B4	Analog In HI/In 1
Analog In 2 HI/In 3	A5	B5	Analog Signal Gnd
Analog In 2 LO/In 4	A6	B6	Analog In 3 HI/In 5
Analog Signal Gnd	A7	B7	Analog In 3 LO/In 6
Analog Signal Gnd	A8	B8	Analog In 4 HI/In 7
Analog In 5 HI/In 9	A9	B9	Analog In 4 LO/In 8
Analog In 5 LO/In 10	A10	B10	Analog Signal Gnd
Analog In 6 HI/In 11	A11	B11	Analog Signal Gnd
Analog In 6 LO/In 12	A12	B12	Analog In 7 HI/In 13
Analog Signal Gnd	A13	B13	Analog In 7 LO/In 14
Analog Signal Gnd	A14	B14	Analog In 8 HI/In 15
Sample Hold Out J1,J2,J3	A15	B15	Analog In 8 LO/In 16
Bit 12 (LSB) Dig. Out	A16	B16	Mux. Ana. Out-SHM.In
Bit 11 Digital Output	A17	B17	Interrupt Power Control
Bit 10 Digital Output	A18	B18	Mux. Address (1) Output

FUNCTION	PIN	PIN	FUNCTION
Bit 9 Digital Output	A19	B19	Mux Address (2) Output
Bit 8 Digital Output	A20	B20	Mux Address (4) Output
Bit 7 Digital Output	A21	B21	Mux Address (8) Output
Bit 6 Digital Output	A22	B22	Mux Inhibit Input
Bit 5 Digital Output	A23	B23	Busy (EOC) Output
Bit 4 Digital Output	A24	B24	Start Convert Input
Bit 3 Digital Output	A25	B25	Device Select Input
Bit 2 Digital Output	A26	B26	Strobe Input
Bit 1 ($\overline{MSB}$) Dig. Out.	A27	B27	Frame Sync Output
Bit 1 (MSB) Dig. Out.	A28	B28	Random Address ($\overline{1}$) Input
Random Add. ($\overline{8}$) Input	A29	B29	Random Address ($\overline{2}$) Input
Reset Direct Input	A30	B30	Random Address ($\overline{4}$) Input
Reset Input	A31	B31	Short Cycle ($\overline{1}$) Output
Random/Sequential In.	A32	B32	Short Cycle ($\overline{2}$) Output
Short Cycle (1) Input	A33	B33	Short Cycle ($\overline{4}$) Output
Short Cycle (2) Input	A34	B34	Short Cycle ($\overline{8}$) Output
Short Cycle (4) Input	A35	B35	A/D Clock Output
Short Cycle (8) Input	A36	B36	A/D Serial Output

Pin functions are shared depending on whether an 8 channel differential or 16 single-ended model is ordered. FUNCTIONS listed with a slash / show the differential version first then the single-ended version, i.e. E3 4 / E3-4a

E3-5

CONNECTOR FUNCTIONS ARE ARRANGED IN VERTICAL EDGEBOARD VIEW

CONNECTOR J1

PIN	FUNCTION	PIN	FUNCTION
A	CH 16 HI ANALOG INPUT	1	CH 16 LO ANALOG INPUT
B	CH 15 HI ANALOG INPUT	2	CH 15 LO ANALOG INPUT
C	CH 14 HI ANALOG INPUT	3	CH 14 LO ANALOG INPUT
D	CH 13 HI ANALOG INPUT	4	CH 13 LO ANALOG INPUT
E	CH 12 HI ANALOG INPUT	5	CH 12 LO ANALOG INPUT
F	CH 11 HI ANALOG INPUT	6	CH 11 LO ANALOG INPUT
H	CH 10 HI ANALOG INPUT	7	CH 10 LO ANALOG INPUT
J	CH 9 HI ANALOG INPUT	8	CH 9 LO ANALOG INPUT
K	AUX. LO ANALOG INPUT	9	AUX. LO ANALOG INPUT
L	DEVICE SELECT	10	RANDOM / SEQUENTIAL
M	STROBE	11	RESET
N	2 RANDOM ADDRESS INPUT	12	4 RANDOM ADDRESS INPUT
P	1 RANDOM ADDRESS INPUT	13	8 RANDOM ADDRESS INPUT
R	AUX. LO ANALOG INPUT	14	AUX. LO ANALOG INPUT
S	CH 8 HI ANALOG INPUT	15	CH 8 LO ANALOG INPUT
T	CH 7 HI ANALOG INPUT	16	CH 7 LO ANALOG INPUT
U	CH 6 HI ANALOG INPUT	17	CH 6 LO ANALOG INPUT
V	CH 5 HI ANALOG INPUT	18	CH 5 LO ANALOG INPUT
W	CH 4 HI ANALOG INPUT	19	CH 4 LO ANALOG INPUT
X	CH 3 HI ANALOG INPUT	20	CH 3 LO ANALOG INPUT
Y	CH 2 HI ANALOG INPUT	21	CH 2 LO ANALOG INPUT
Z	CH 1 HI ANALOG INPUT	22	CH 1 LO ANALOG INPUT

CONNECTOR J2

PIN	FUNCTION	PIN	FUNCTION
A	12 DIGITAL OUTPUT (LSB)	1	8 SEQUENCER OUTPUT
B	11 DIGITAL OUTPUT	2	4 SEQUENCER OUTPUT
C	10 DIGITAL OUTPUT	3	2 SEQUENCER OUTPUT
D	9 DIGITAL OUTPUT	4	1 SEQUENCER OUTPUT
E	8 DIGITAL OUTPUT	5	INT. CLOCK OUT
F	7 DIGITAL OUTPUT	6	NO CONNECTION
H	6 DIGITAL OUTPUT	7	NO CONNECTION
J	5 DIGITAL OUTPUT	8	NO CONNECTION
K	4 DIGITAL OUTPUT	9	CONVERT
L	3 DIGITAL OUTPUT	10	NO CONNECTION
M	2 DIGITAL OUTPUT	11	NO CONNECTION
N	1 DIGITAL OUTPUT (MSB)	12	NO CONNECTION
P	SERIAL OUTPUT	13	-15VDC (S&H)
R	BUSY	14	FRAME SYNC
S	-15VDC OR -20VDC	15	$\overline{1}$ SEQUENCER OUTPUT
T	ADC INPUT (TEST POINT)	16	$\overline{2}$ SEQUENCER OUTPUT
U	+15VDC	17	$\overline{4}$ SEQUENCER OUTPUT
V	-15VDC	18	$\overline{8}$ SEQUENCER OUTPUT
W	GROUND	19	$\overline{1}$ SHORT CYCLE INPUT
X	GROUND	20	$\overline{2}$ SHORT CYCLE INPUT
Y	+5VDC	21	$\overline{4}$ SHORT CYCLE INPUT
Z	+5VDC	22	$\overline{8}$ SHORT CYCLE INPUT

-20V USED ONLY FOR E3-5a)

E3-5a

LEAVE J2-13 OPEN WHEN J2-S IS CONNECTED TO -20V (±10VFS INPUT RANGE IN USE)

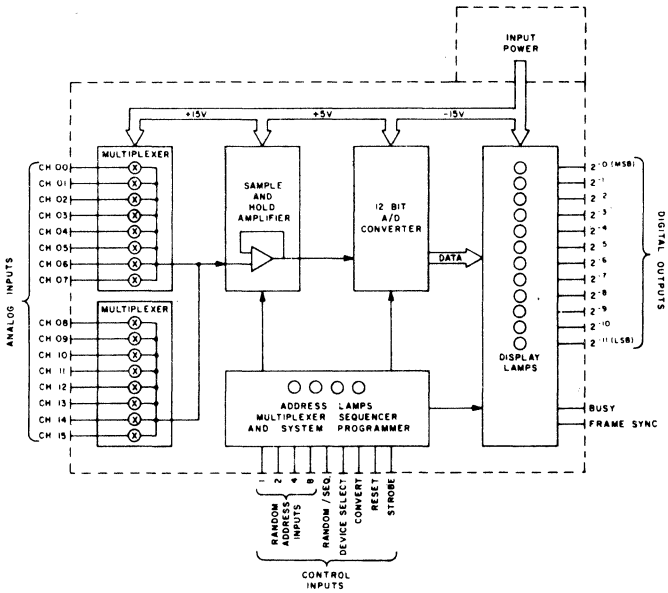

22. LOGIC/BLOCK DRAWINGS

E3-29

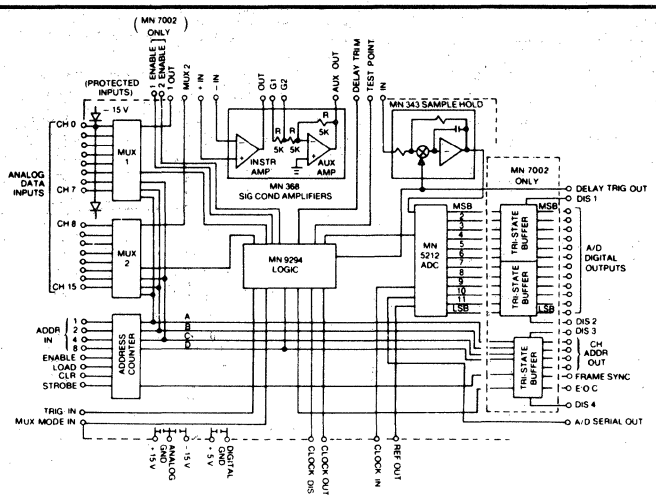

E4-3

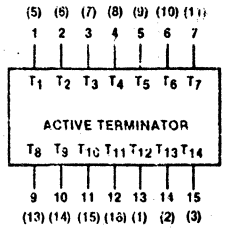

E6-1

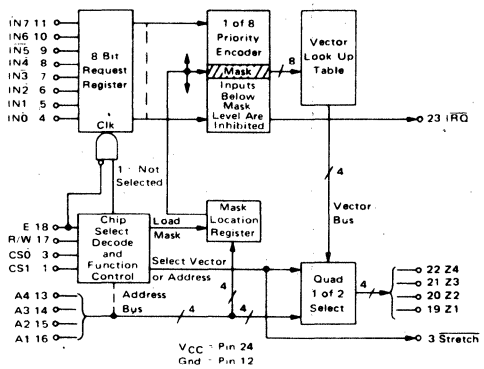

E6-9

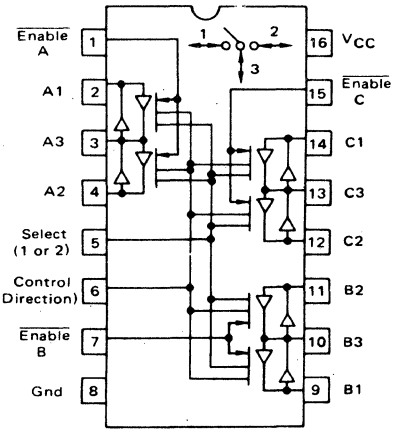

E6-14

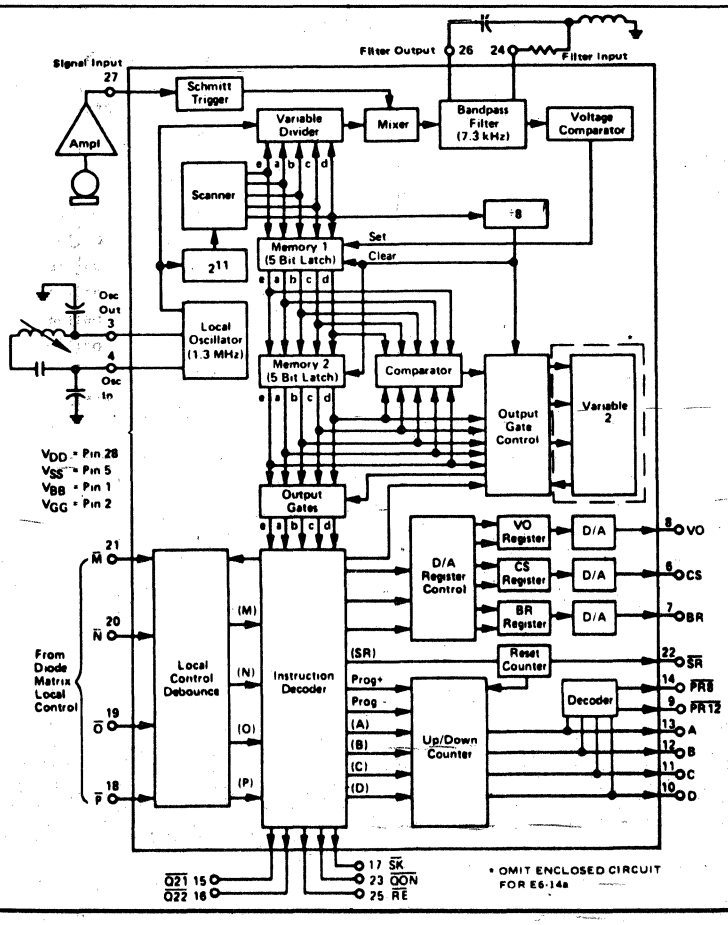

E6-19

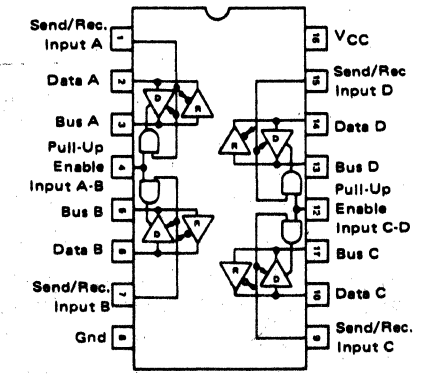

22. LOGIC/BLOCK DRAWINGS

E6-20

PIN NAMES

A0 – A7	Bus A Data Inputs/Outputs
B0 – B7	Bus B Data Inputs/Outputs
DIR	Direction Control Input
$\overline{G}$	Enable (Active LOW) Input

(TOP VIEW)

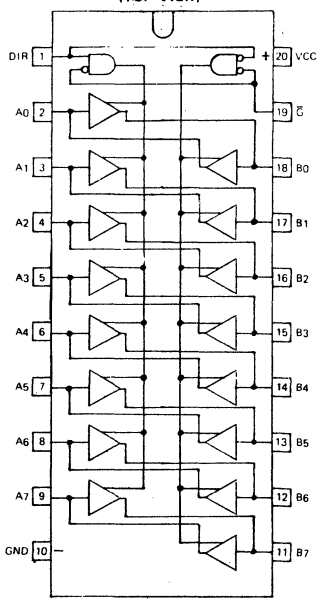

E6-27

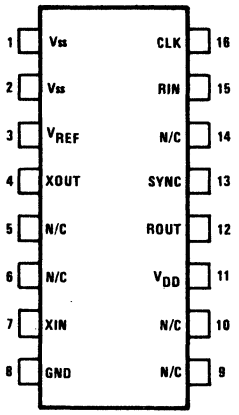

E6-31

E6-31a Pin 16 SYNDET

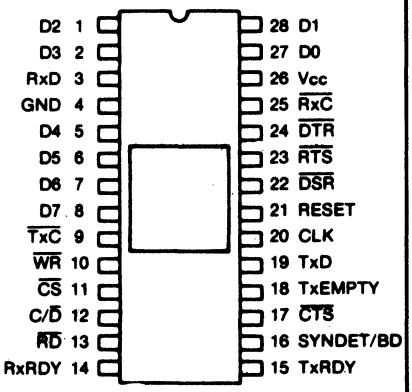

E6-36

TRANSMITTER

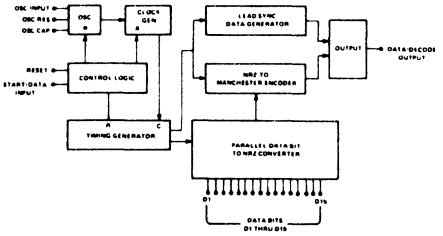

E6-37

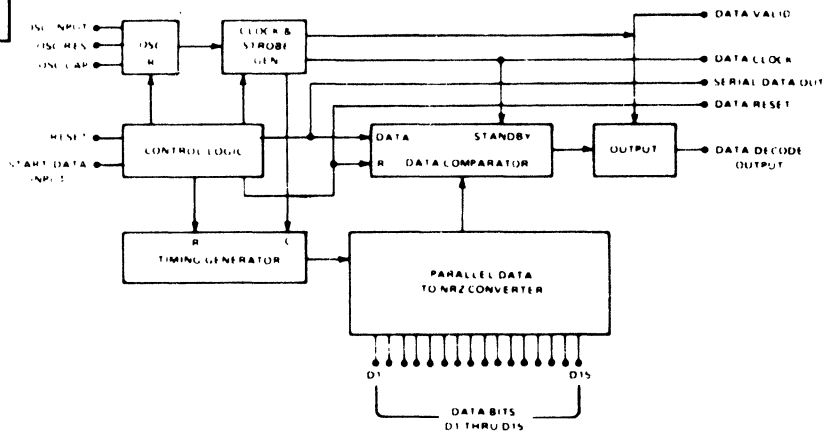

E6-44

PIN ASSIGNMENT

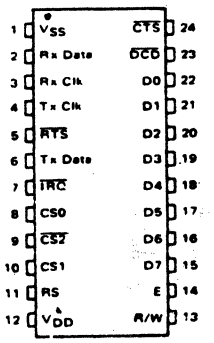

E6-49

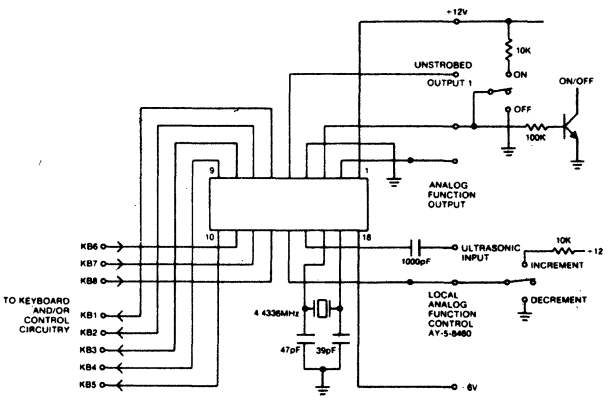

E6-52

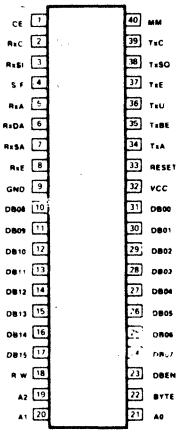

NOTE
00 is least significant bit, highest number (that is, DB15, A21 is most significant bit

22. LOGIC/BLOCK DRAWINGS

E6-61

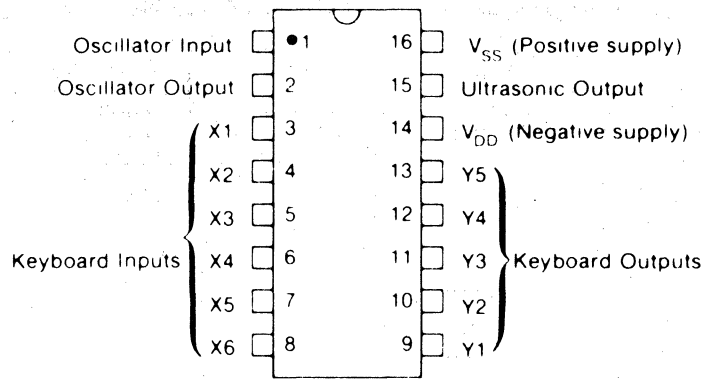

E6-63

Pin No.

1.	Osc	9.	I.R.Diode Drive Output
2.	Osc	10.	KSa)
3.	KI 1)	11.	KSb)
4.	KI 2)	12.	KSc)
5.	KI 3)	13.	KSd)
6.	KI 4)	14.	KSe)
7.	KI 5)	15.	KSf)
8.	V_{EE}	16.	V_{CC}

E7-4

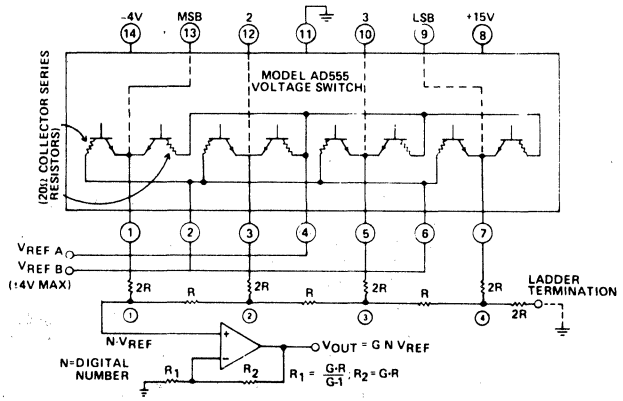

E7-5

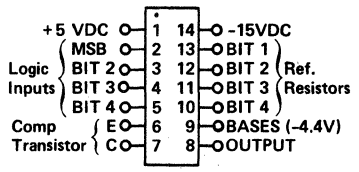

E7-6

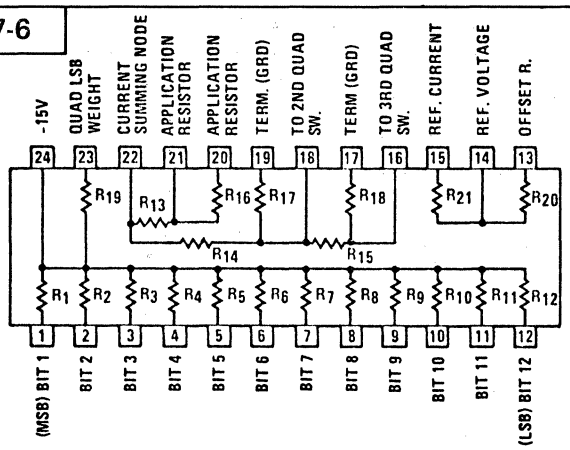

E7-7

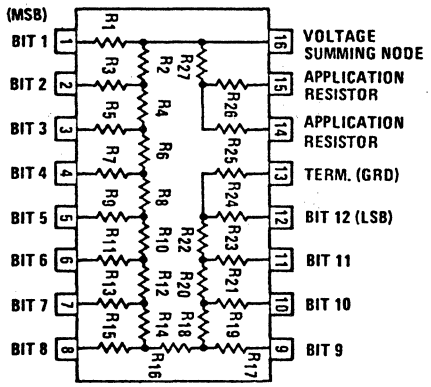

E7-9

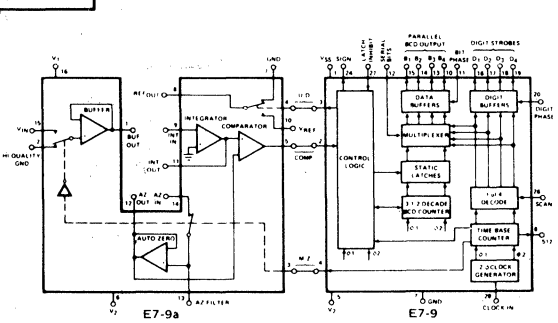

E7-10

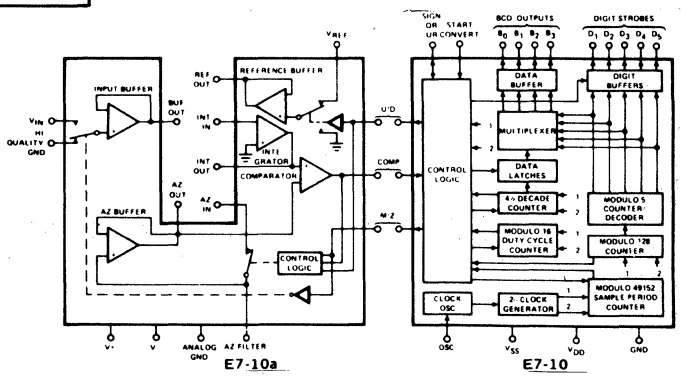

22. LOGIC/BLOCK DRAWINGS

E7-19

E7-19 ANALOG PROCESSOR

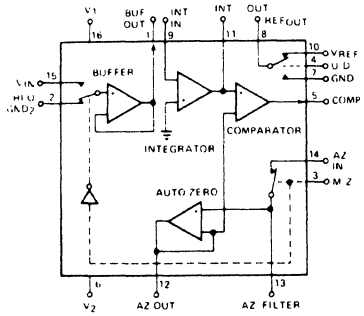

E7-19a DIGITAL PROCESSOR

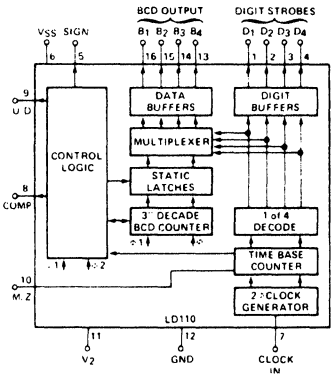

E7-19b DIGITAL PROCESSOR

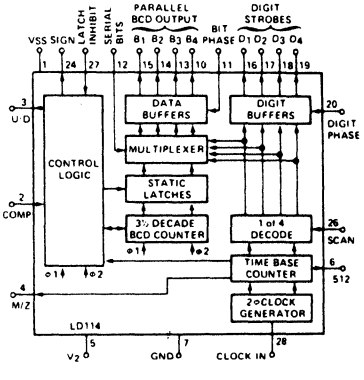

E7-23

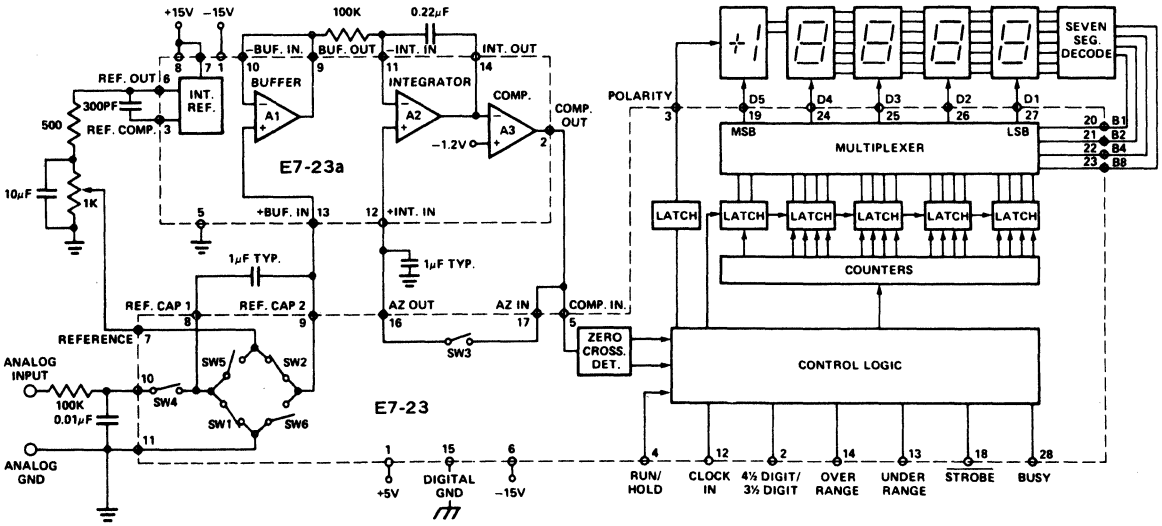

E7-24

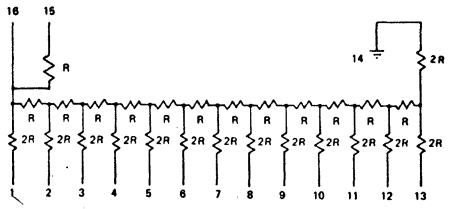

E7-25

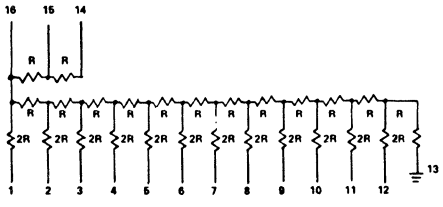

E7-26

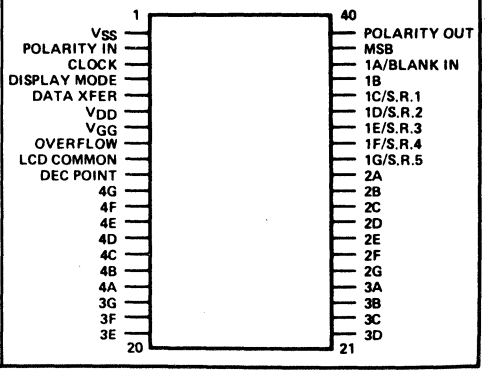

22. LOGIC/BLOCK DRAWINGS

E7-27

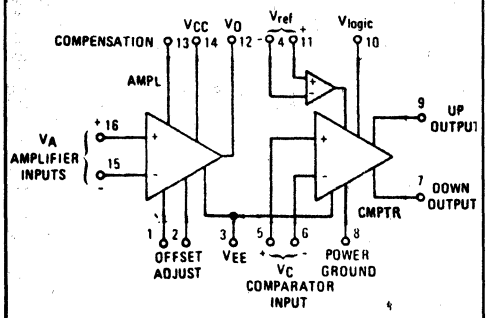

E7-28

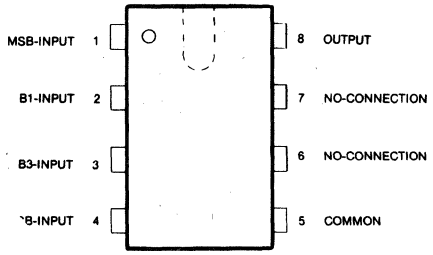

This view is of the labeled side with the pins extending downward.

E7-29

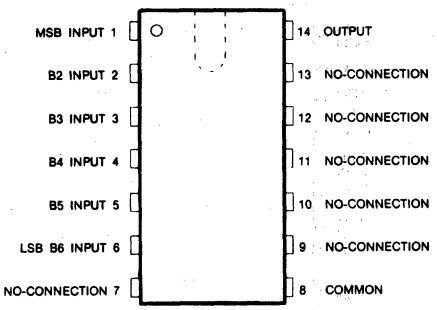

This view is of the labeled side with the pins extending downward.

E7-35

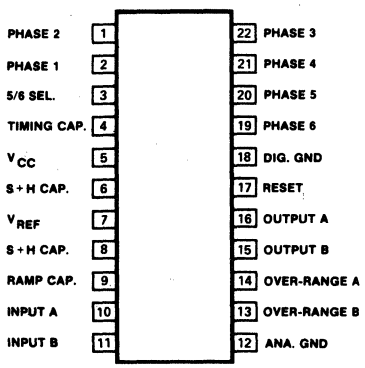

E7-52

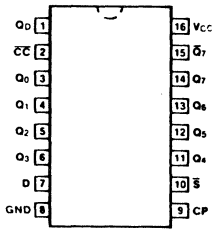

E7-53

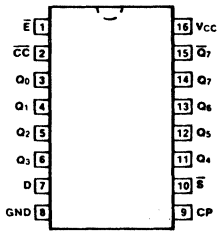

E7-56

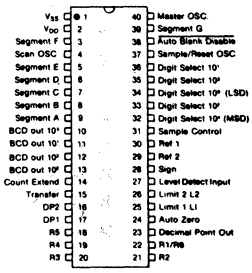

E7-57

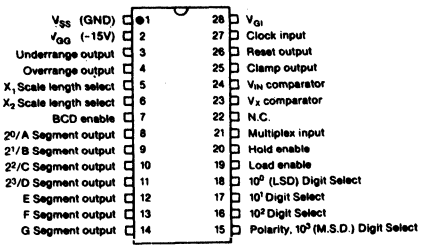

E7-58

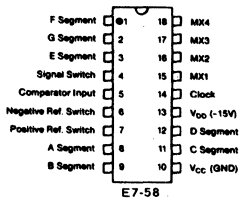

E7-58

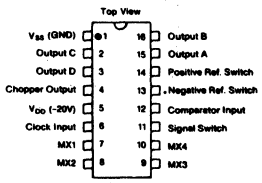

E7-58a

E7-11

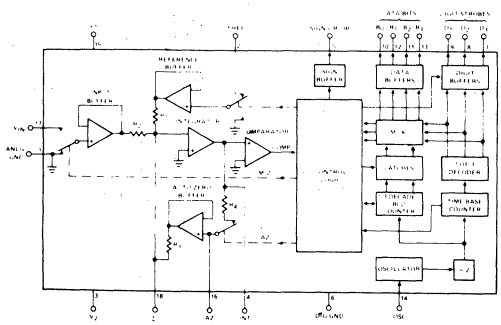

E7-18

NOTE:
1. CELL LOGIC IS REPEATED FOR REGISTER STAGES Q_5 TO Q_1 E7-18/18a Q_9 TO Q_1 E7-18b
2. NUMBERS IN PARENTHESES ARE FOR E7-18b

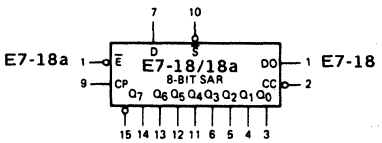

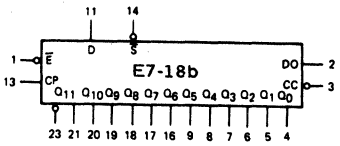

VCC = PIN 16
GND = PIN 12
NC = PINS 10, 15, 22

22. LOGIC/BLOCK DRAWINGS

E7-49

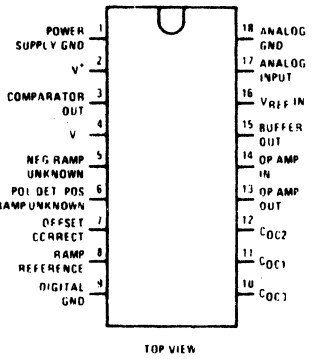

E8-3

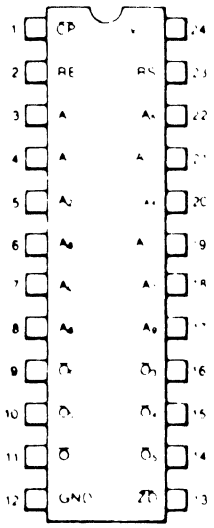

NOTE:
The Flatpak version has the same pinouts (Connection Diagram) as the Dual In-Line Package.

E8-6

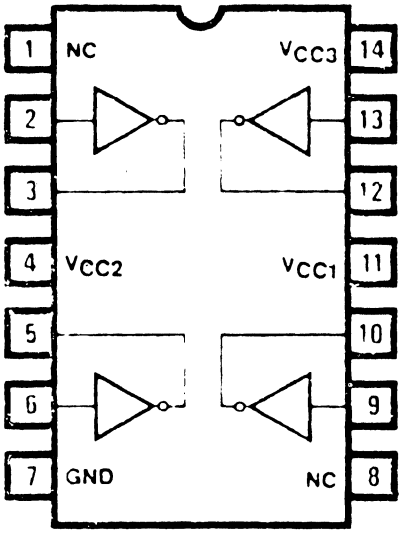

E9-2

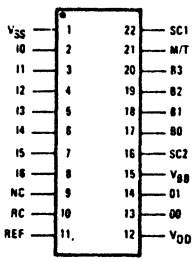

E9-3

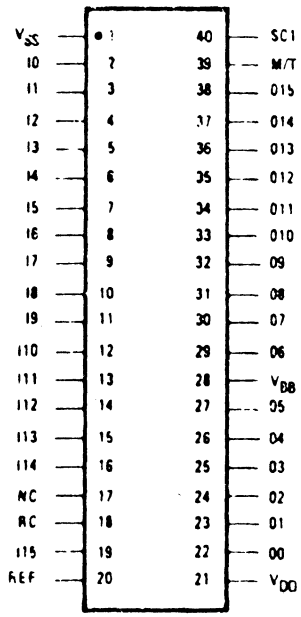

E9-4

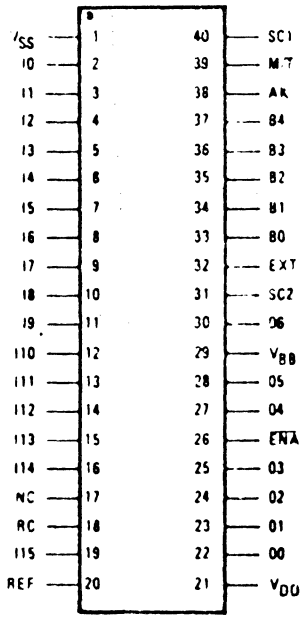

22. LOGIC/BLOCK DRAWINGS

E11-1

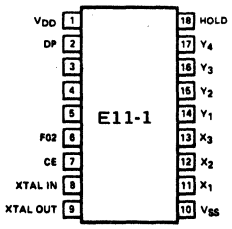

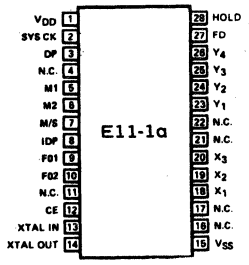

	PINS 3	4	5
E11-1	M1	M/S	F01
E11-1b	M2	M/S	F01
E11-1c	M1/M2	IDP SEL	F01
E11-1d	M1	IDP SEL	F01
E11-1e*	M1	M/S	KT
E11-1f*	M2	M/S	KT

E11-5

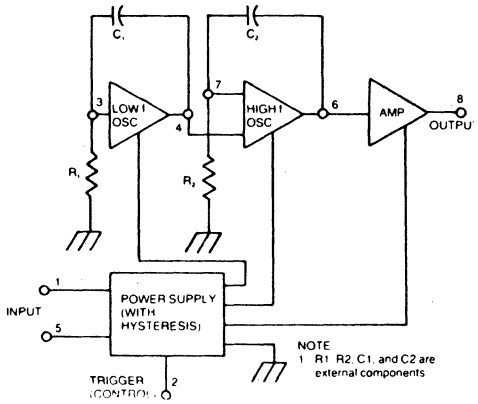

E11-6

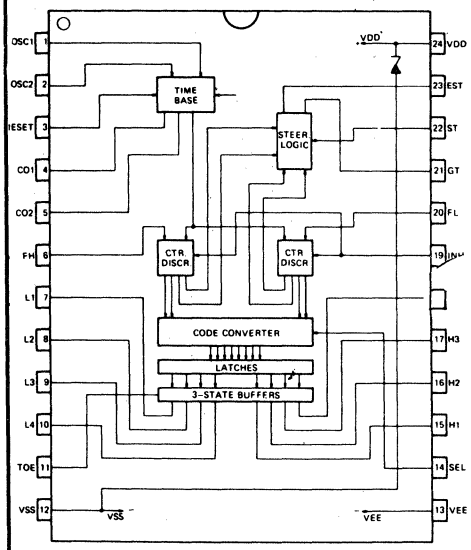

E11-8

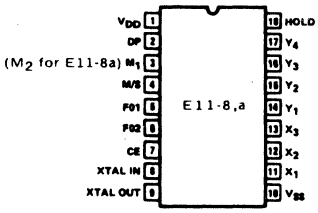

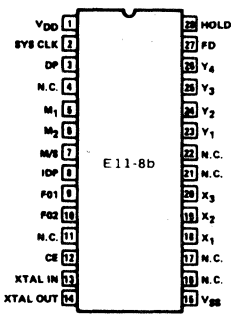

E11-9

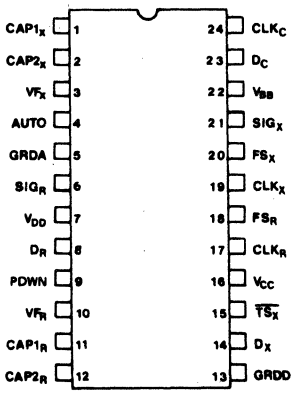

22. LOGIC/BLOCK DRAWINGS

E11-10

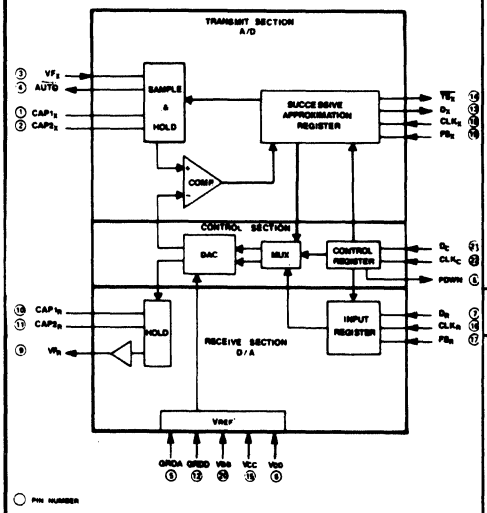

E11-13

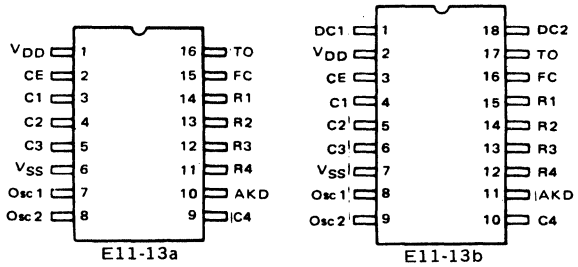

E11-19

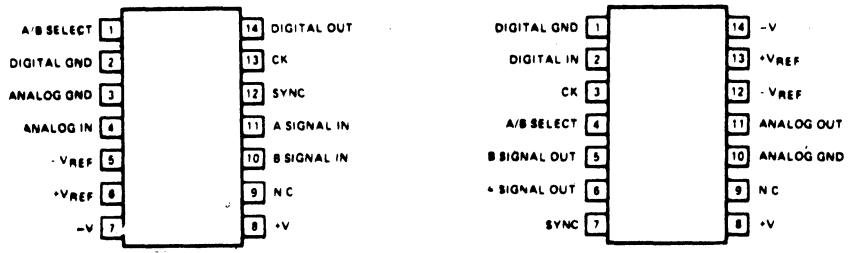

E11-20

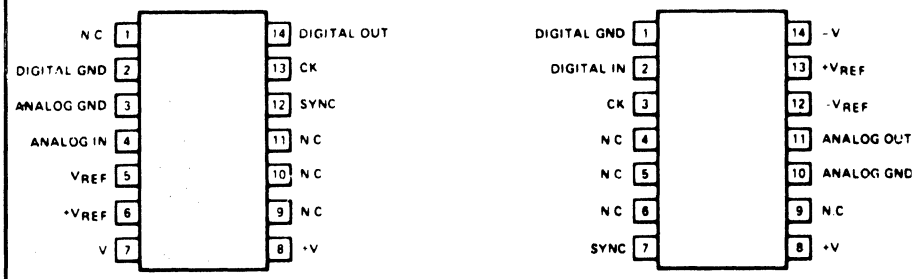

E11-22

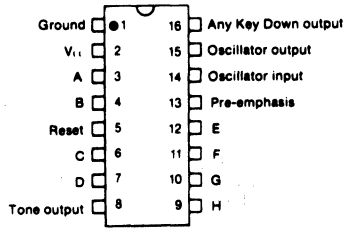

E11-23

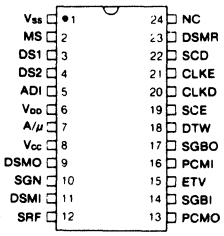

E11-24

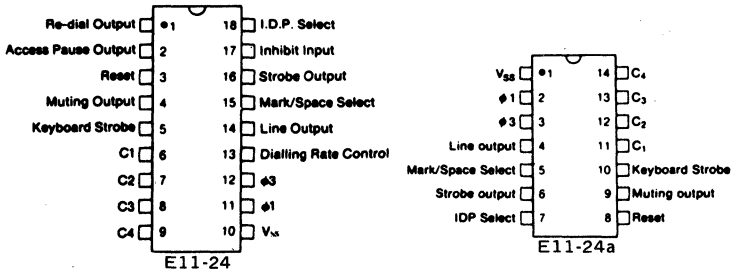

22. LOGIC/BLOCK DRAWINGS

E11-25

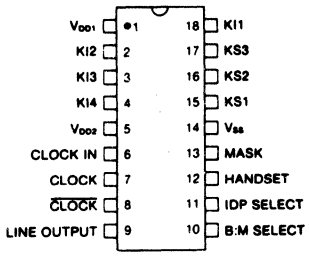

E11-25

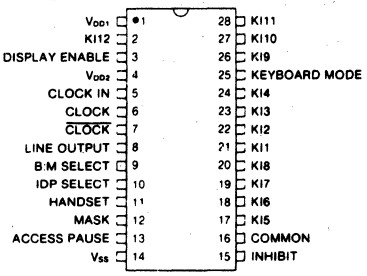

E11-25b

E11-26

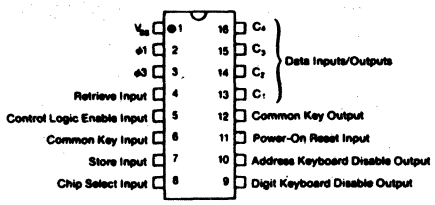

E11-27

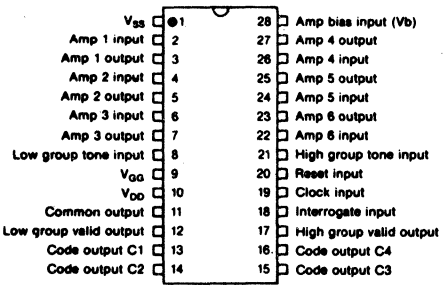

E11-27

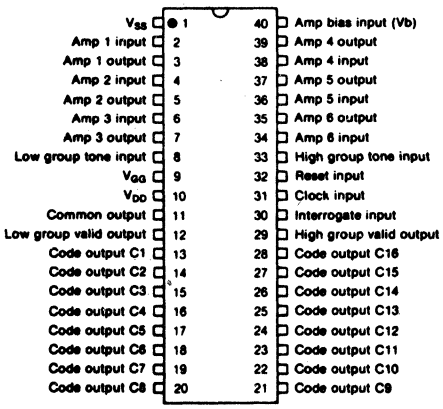

E11-27a

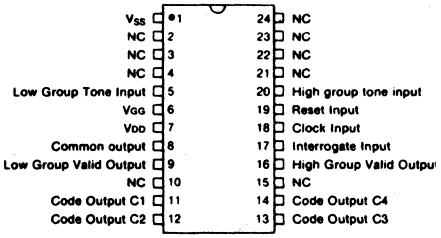

E11-27b

E11-28

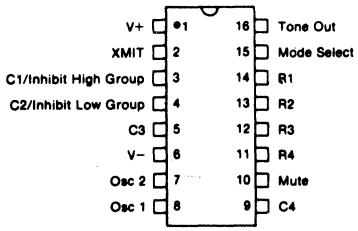

E11-29

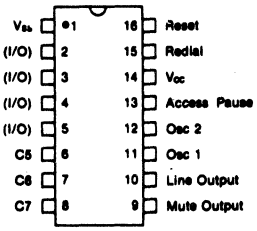

E11-30

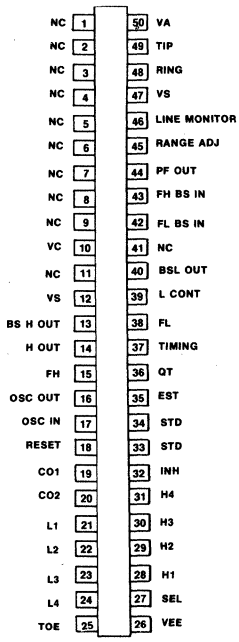

E11-33

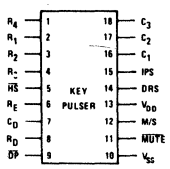

E11-33a

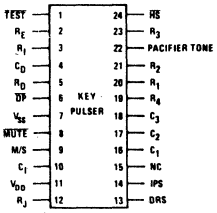

E11-33b

E11-34

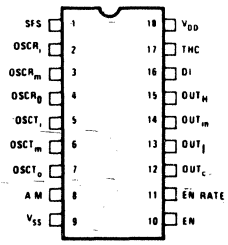

E11-34

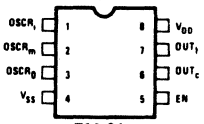

E11-34a

22. LOGIC/BLOCK DRAWINGS

E11-39

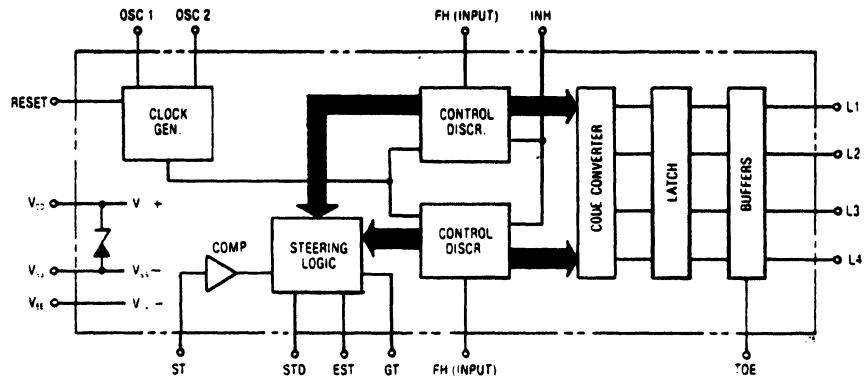

E11-40

*applies to E11-40a only

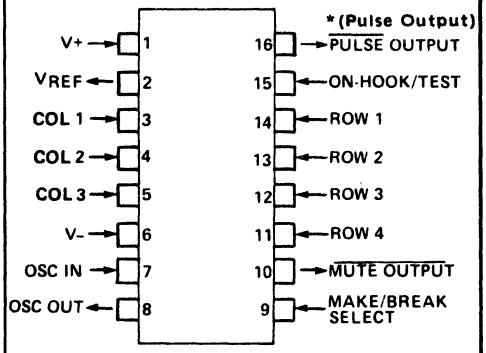

E11-42

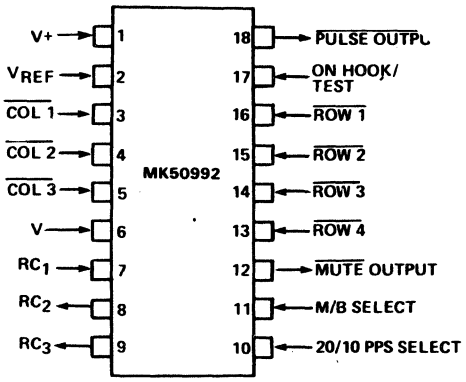

E11-46

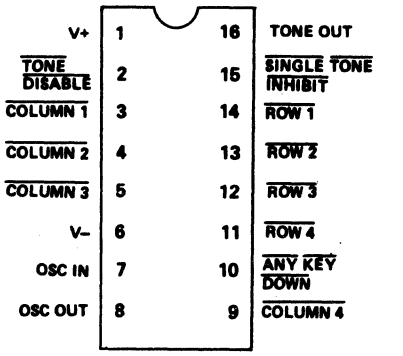

E11-51

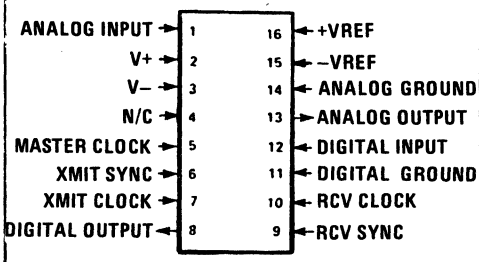

E11-53

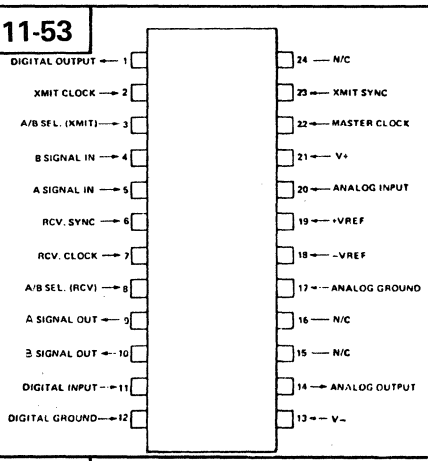

E11-54

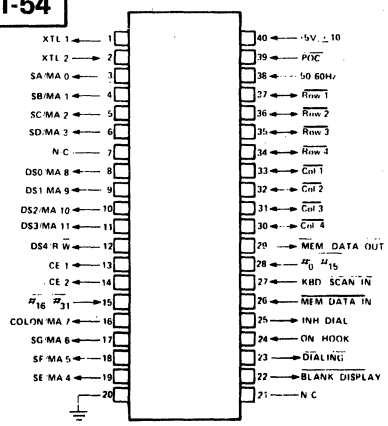

E11-66

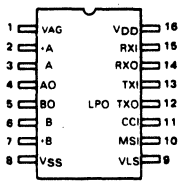

E11-68

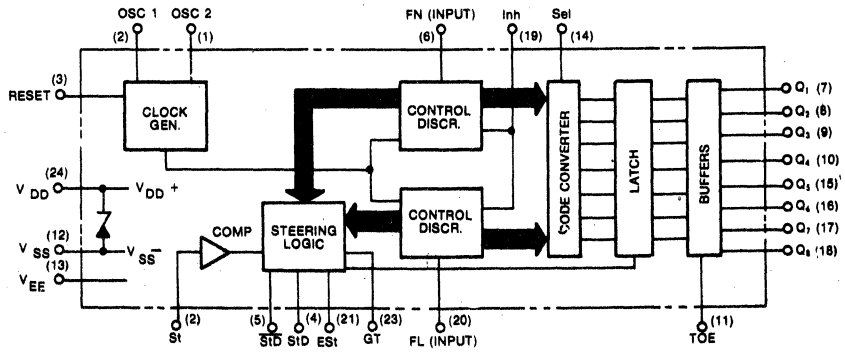

E11-69

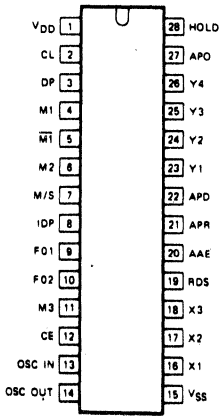

22. LOGIC/BLOCK DRAWINGS

E11-71

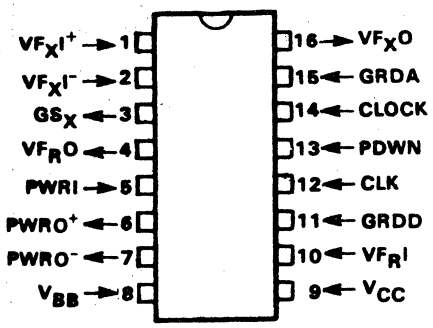

E11-73

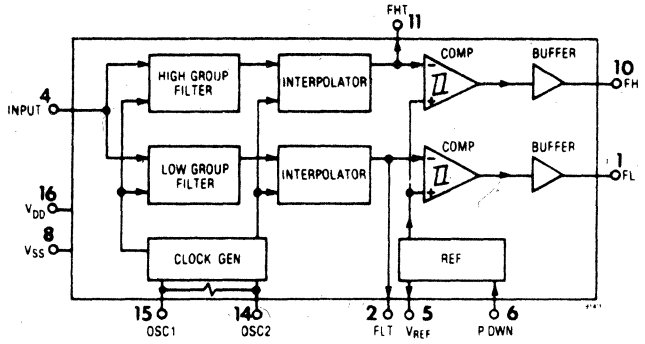

E11-76

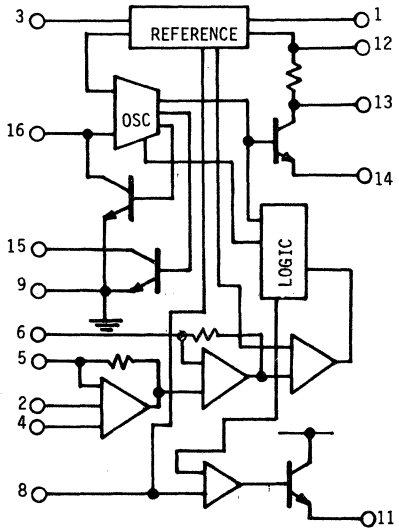

E11-77

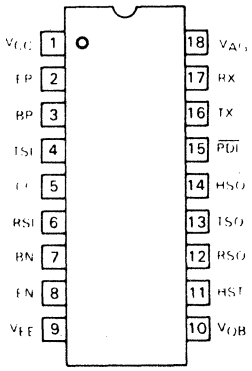

E11-15

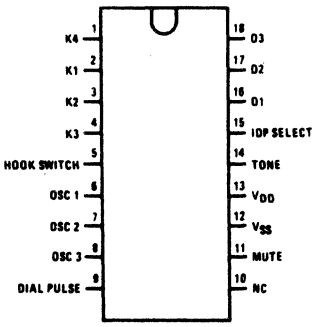

TOP VIEW

E11-32

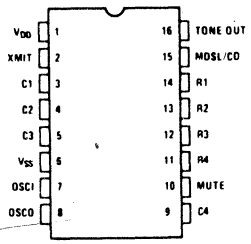

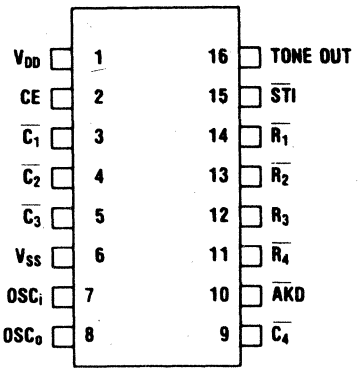

22. LOGIC/BLOCK DRAWINGS

E11-35

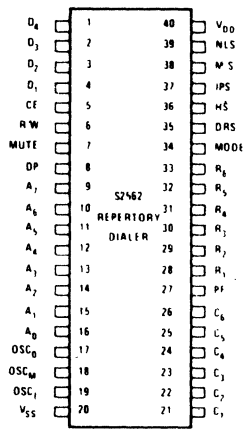

E11-36

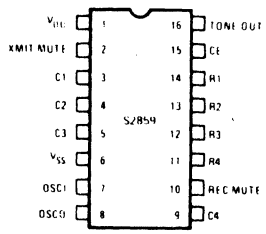

E11-37

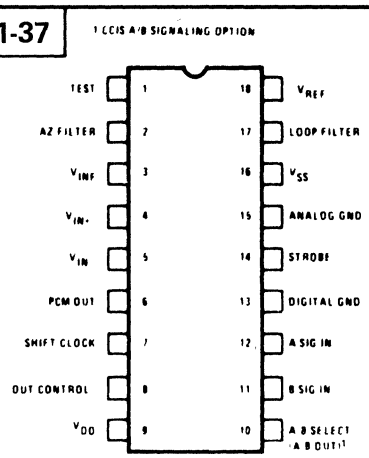

E11-38

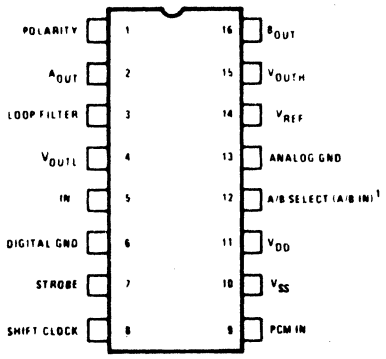

E11-44

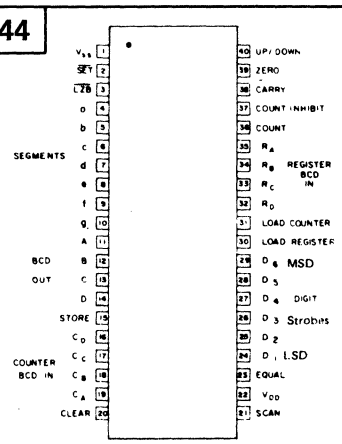

E11-45

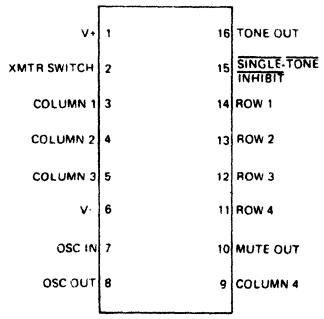

E11-47

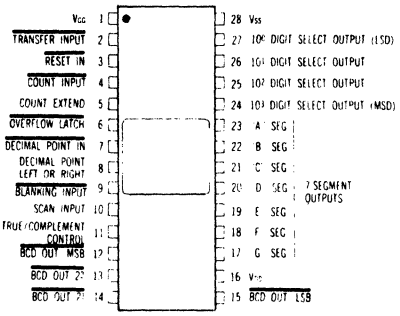

E11-48

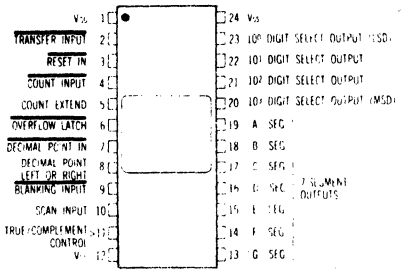

E11-49

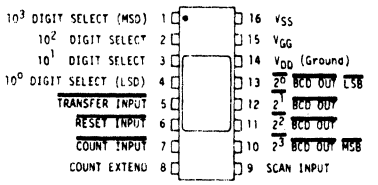

E11-64

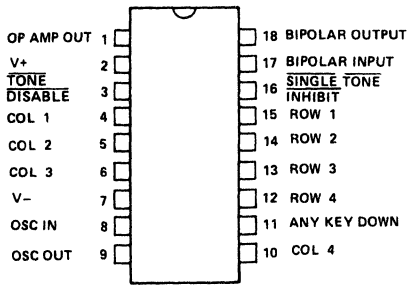

E11-72

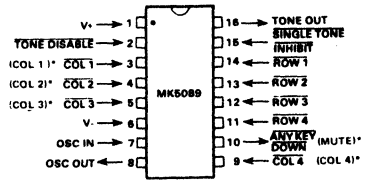

*Applies to E11-72a only

22. LOGIC/BLOCK DRAWINGS

E11-102

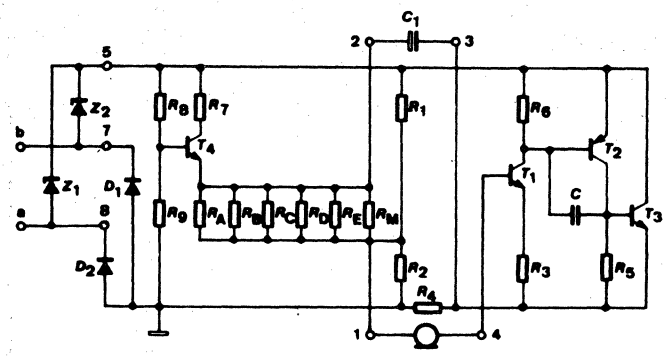

E11-103

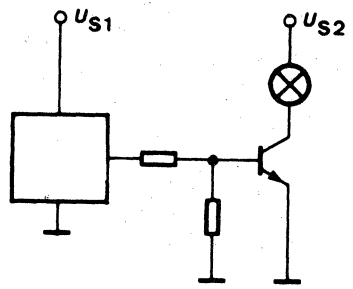

E11-104

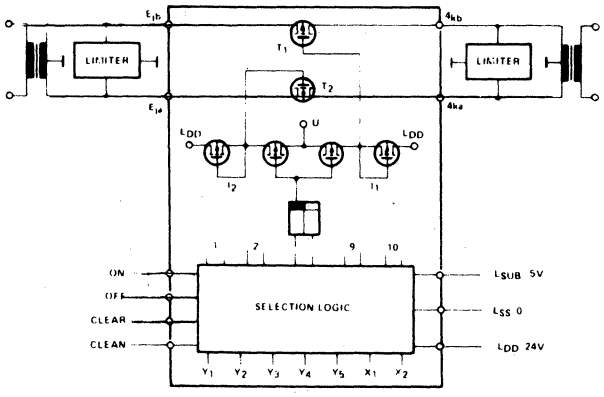

E11-110

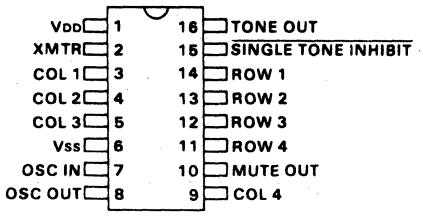

E11-111

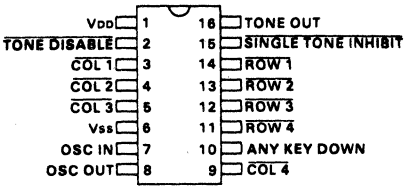

E11-117

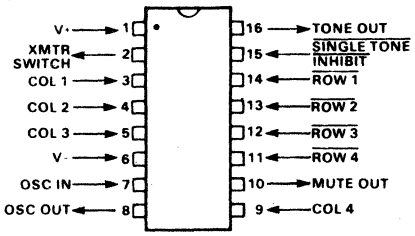

E11-118

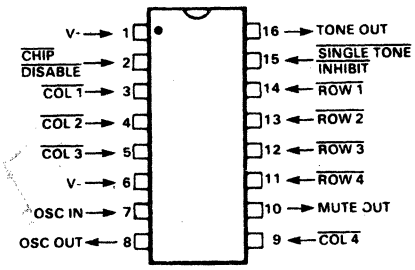

E11-119

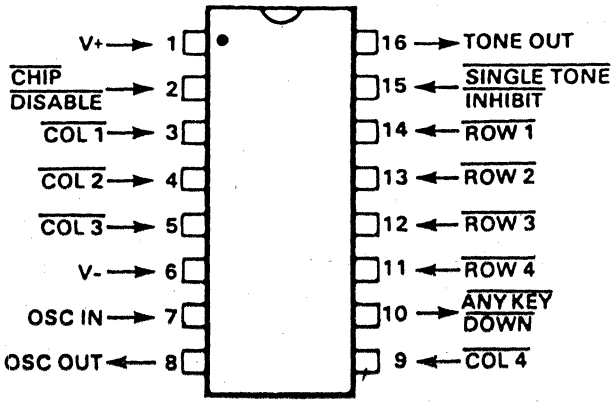

22. LOGIC/BLOCK DRAWINGS

E11-130

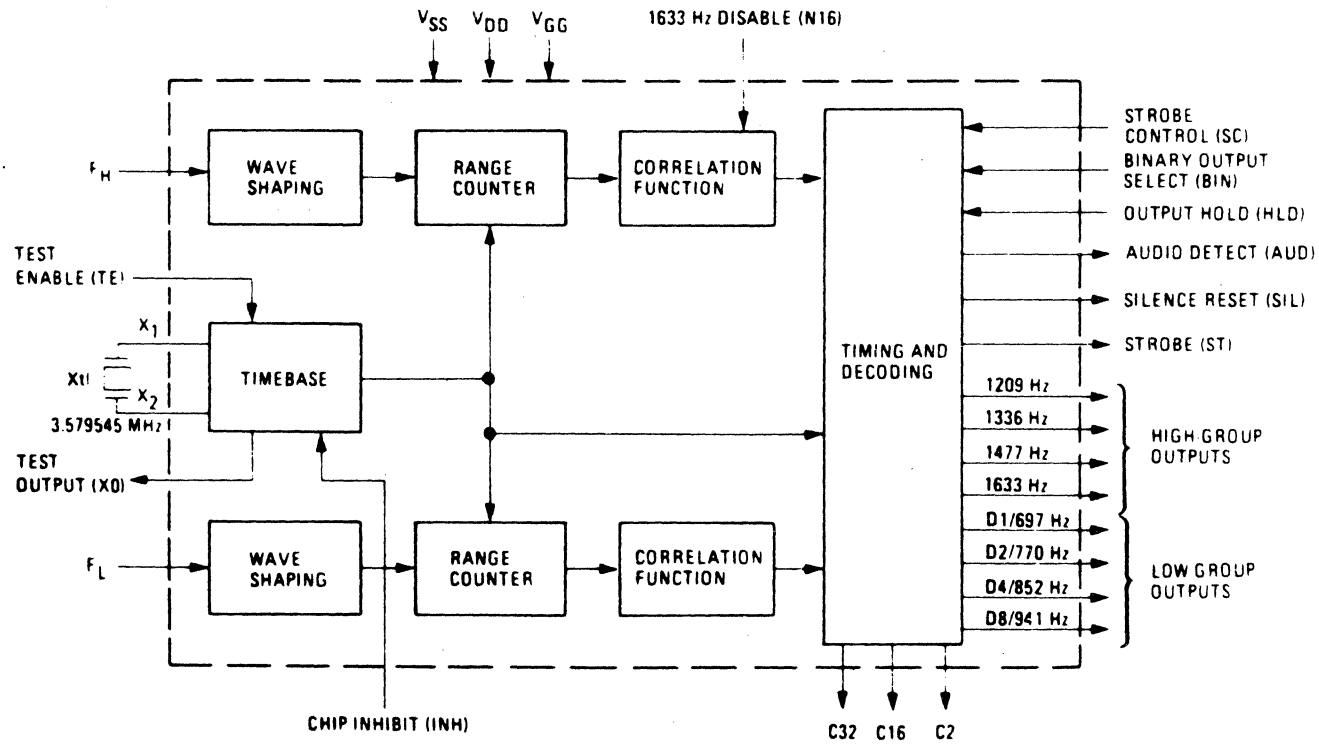

E11-145

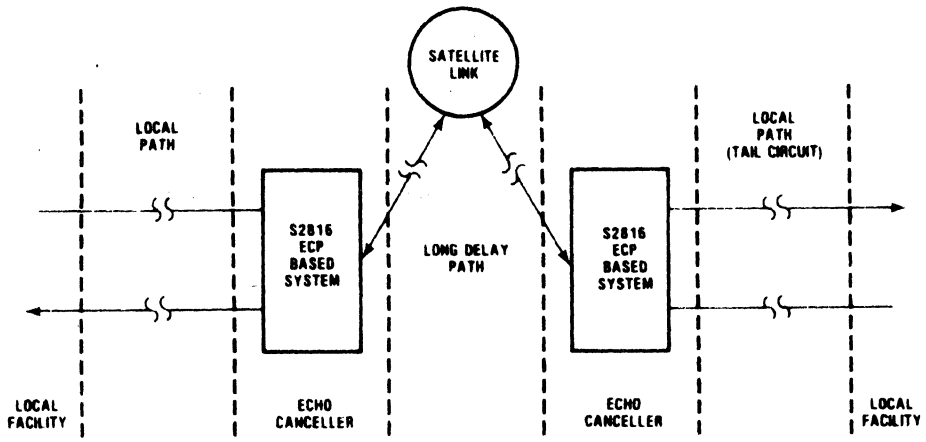

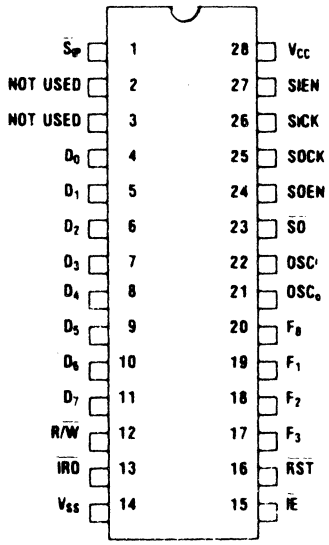

Echo cancellor processor

22. LOGIC/BLOCK DRAWINGS

E12-2

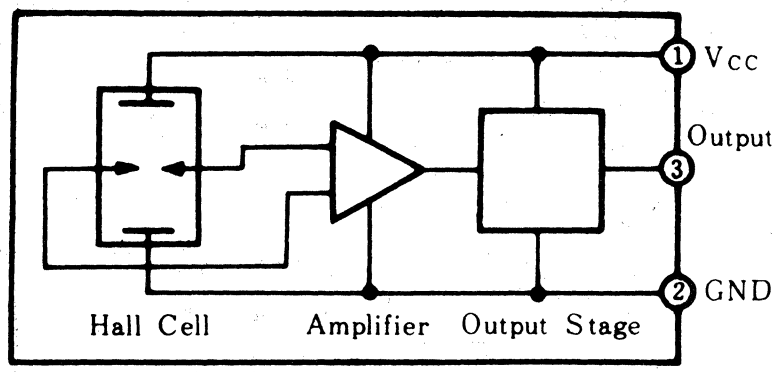

E12-3

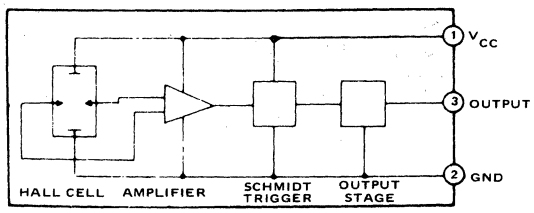

E12-4

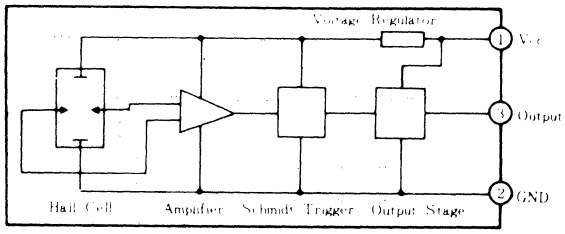

E12-5

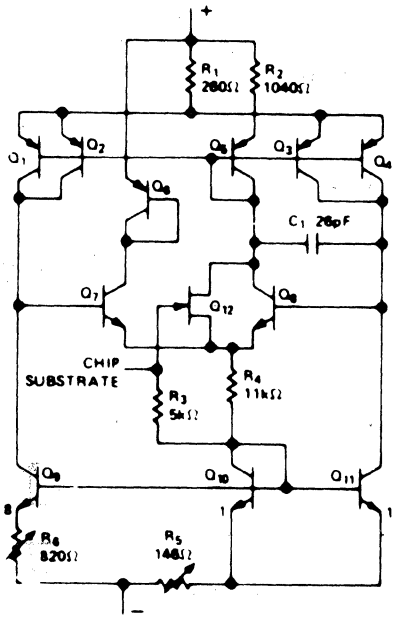

E12-7

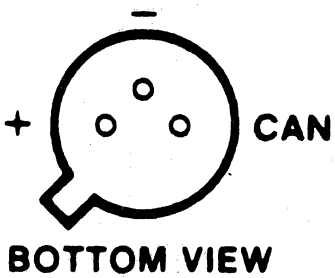

22. LOGIC/BLOCK DRAWINGS

E13-36

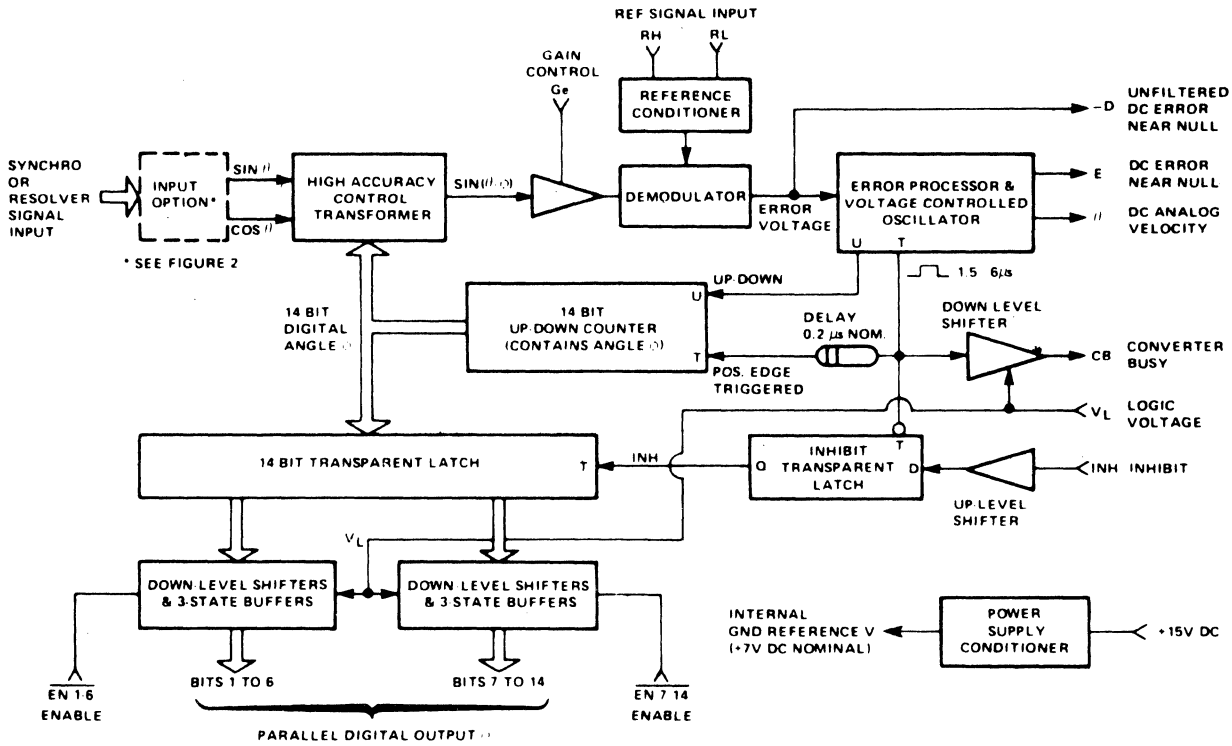

E14-7

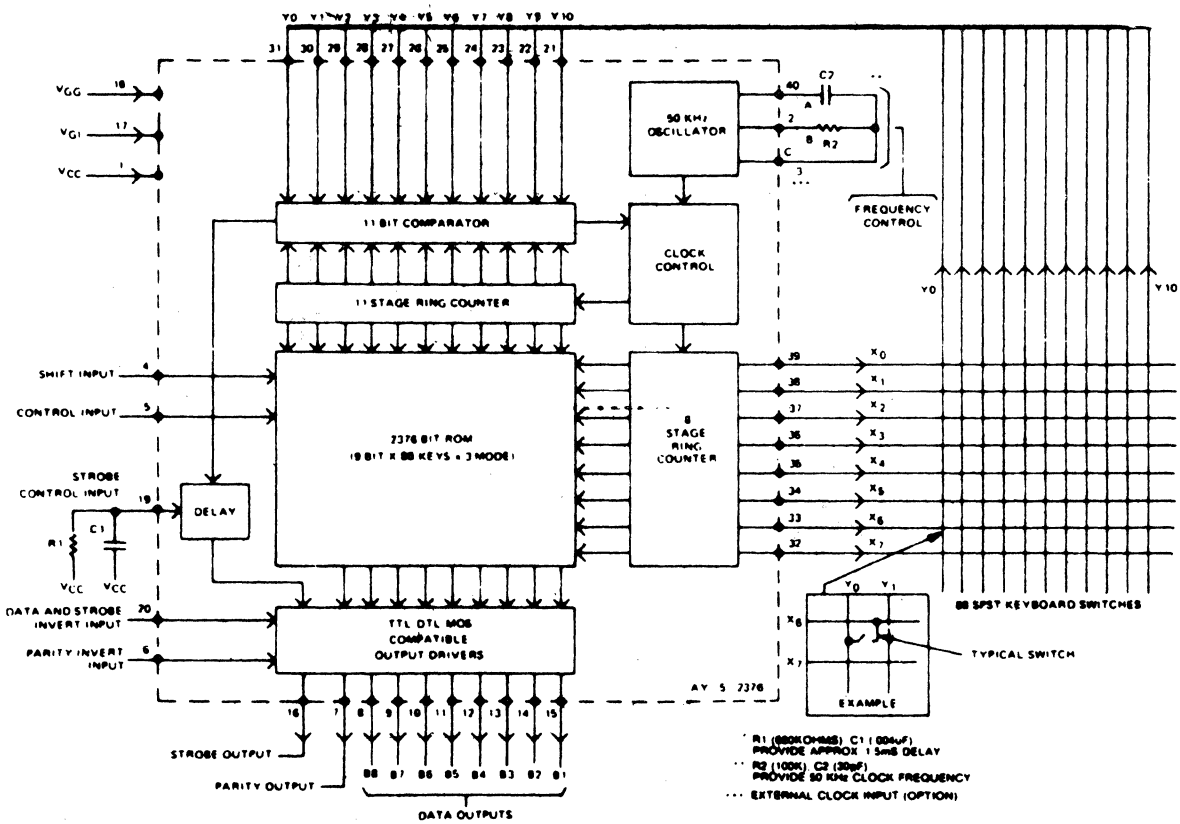

22. LOGIC/BLOCK DRAWINGS

E14-9

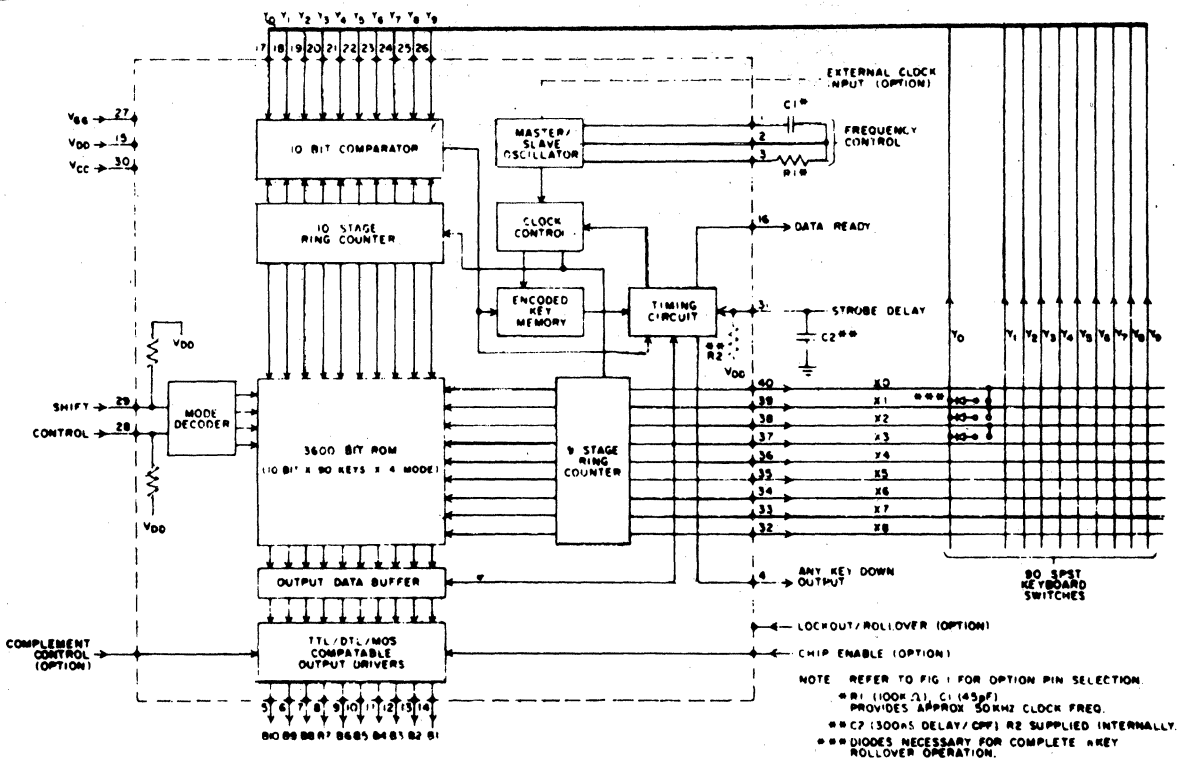

E15-9

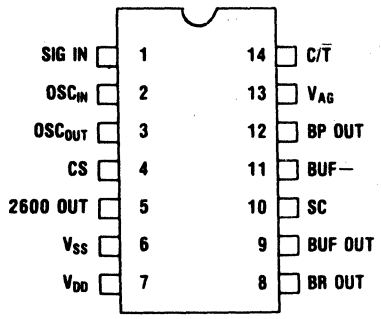

E17-5

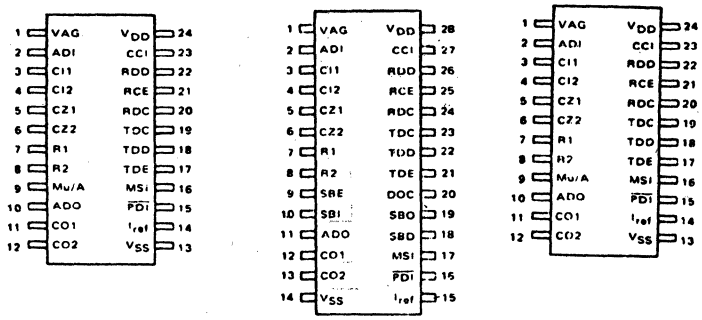

E17-6

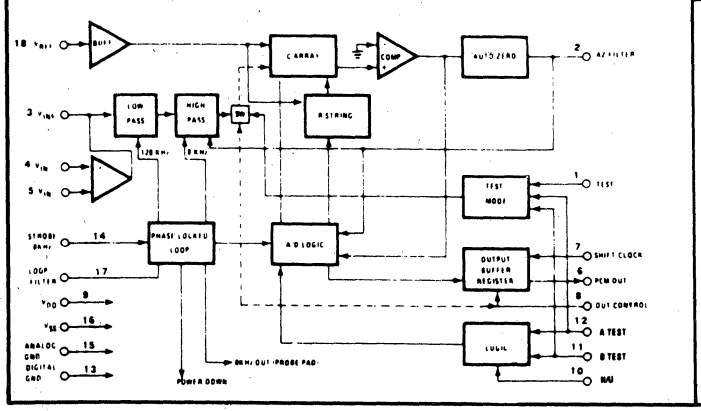

E17-7

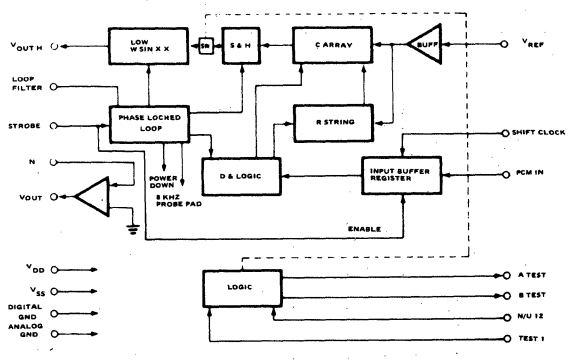

22. LOGIC/BLOCK DRAWINGS

E17-9

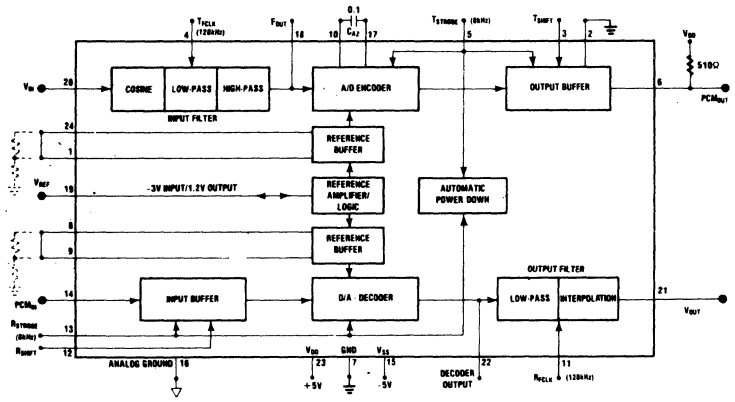

E17-10

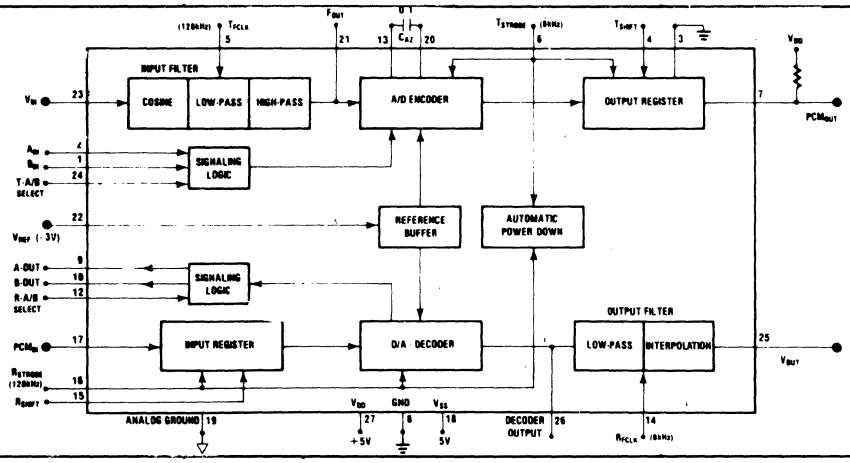

E17-15

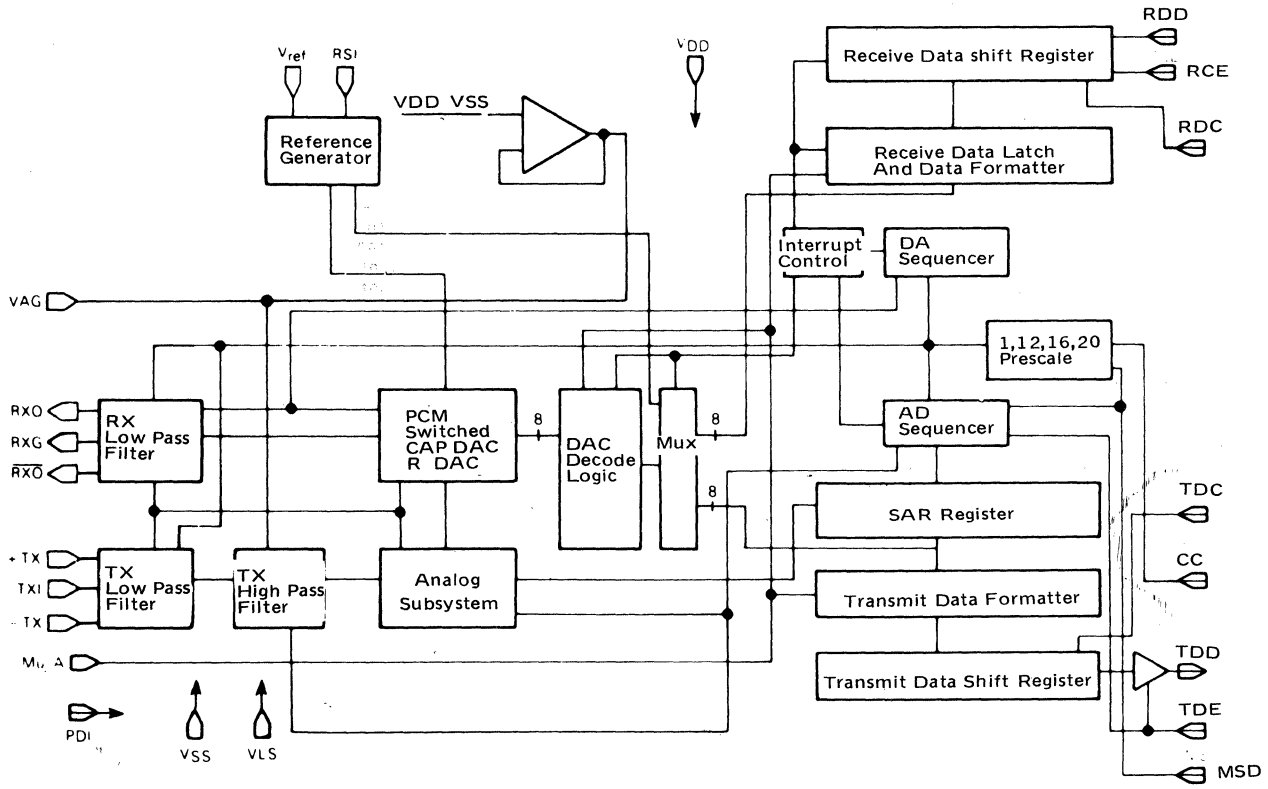

22. LOGIC/BLOCK DRAWINGS

E17-3

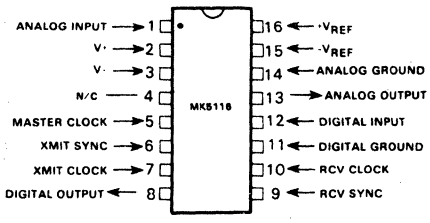

E17-16

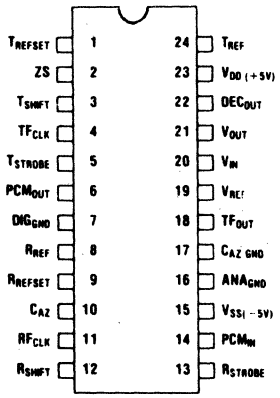

E22-13

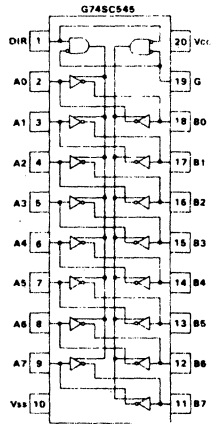

E22-15

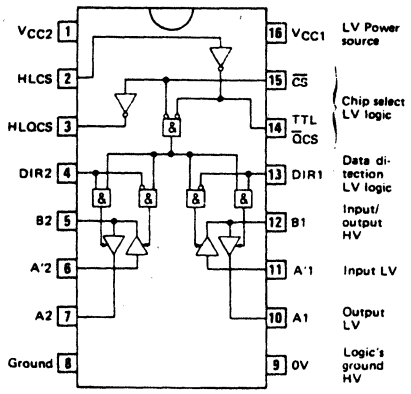

E25-5

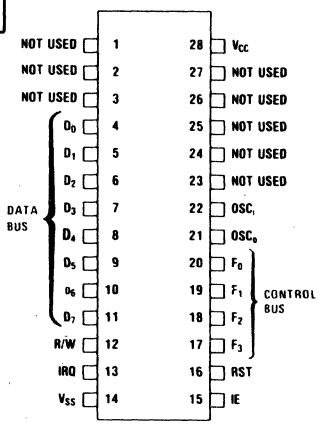

E25-6

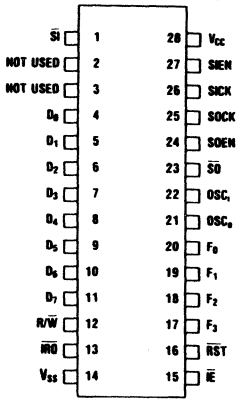

E26-2

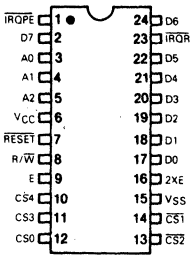

E27-6

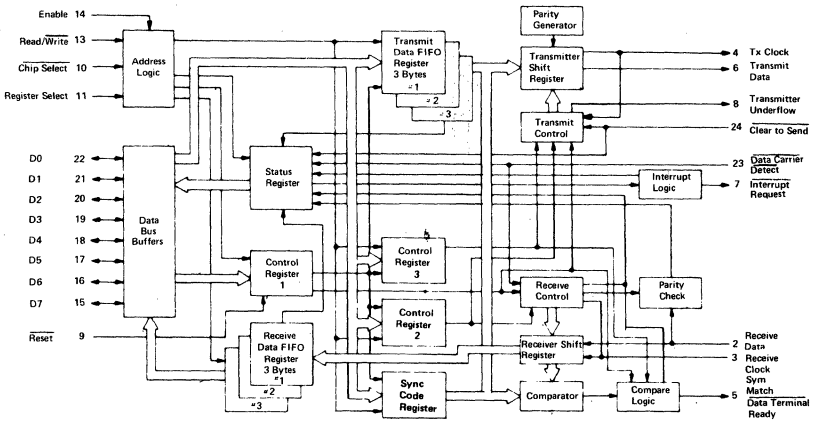

E27-8

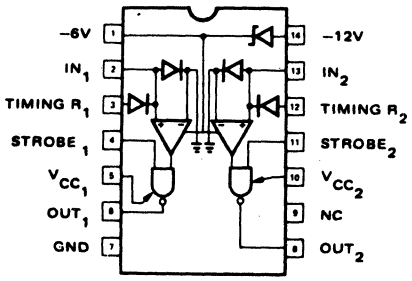

22. LOGIC/BLOCK DRAWINGS

E29-1

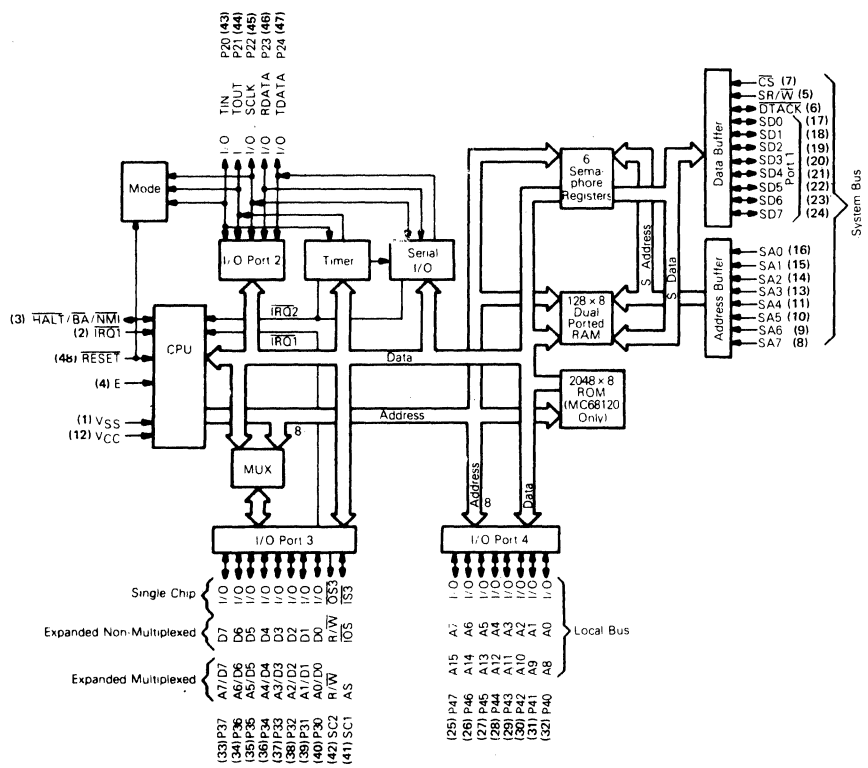

E30-11

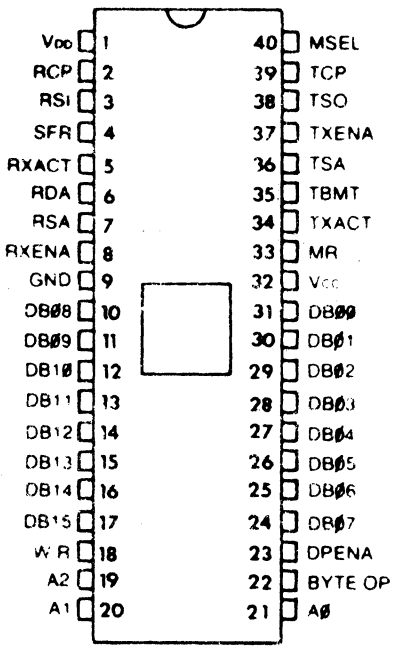

E31-1

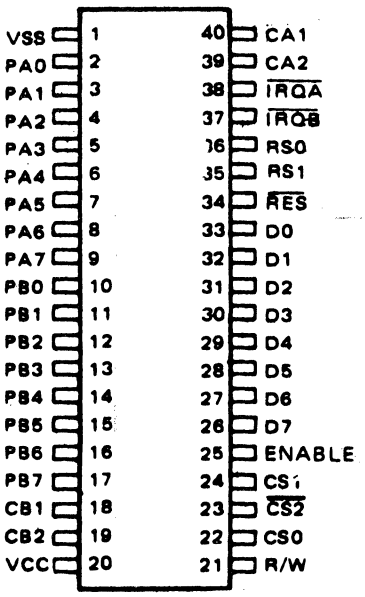

22. LOGIC/BLOCK DRAWINGS

E31-2

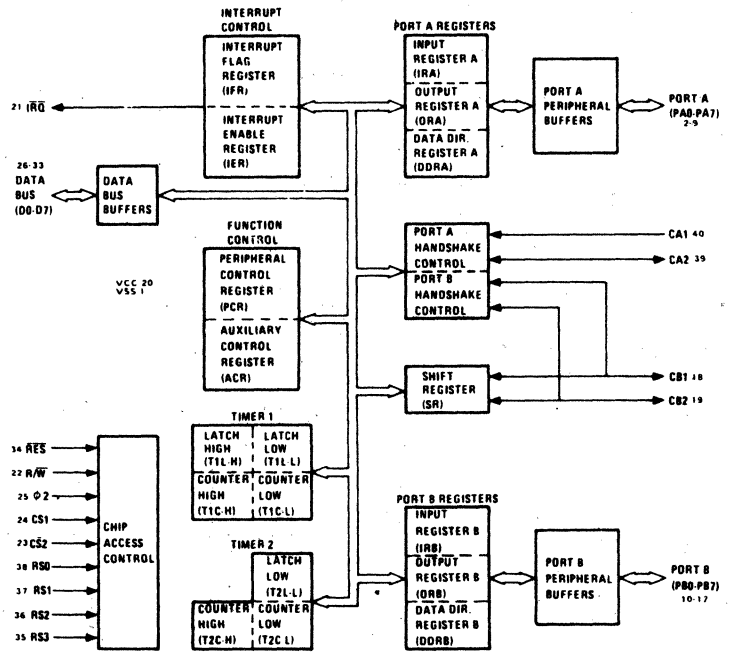

E31-3

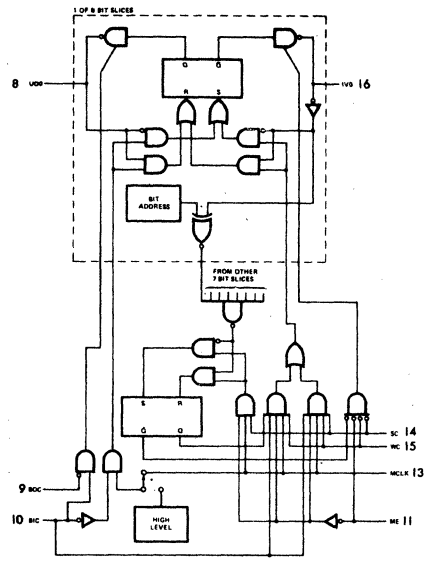

E45-1

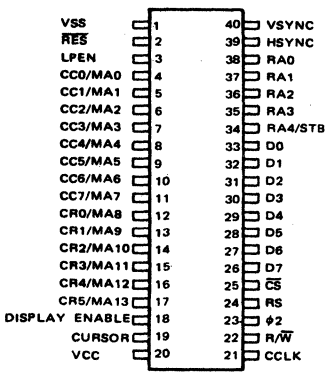

E45-3

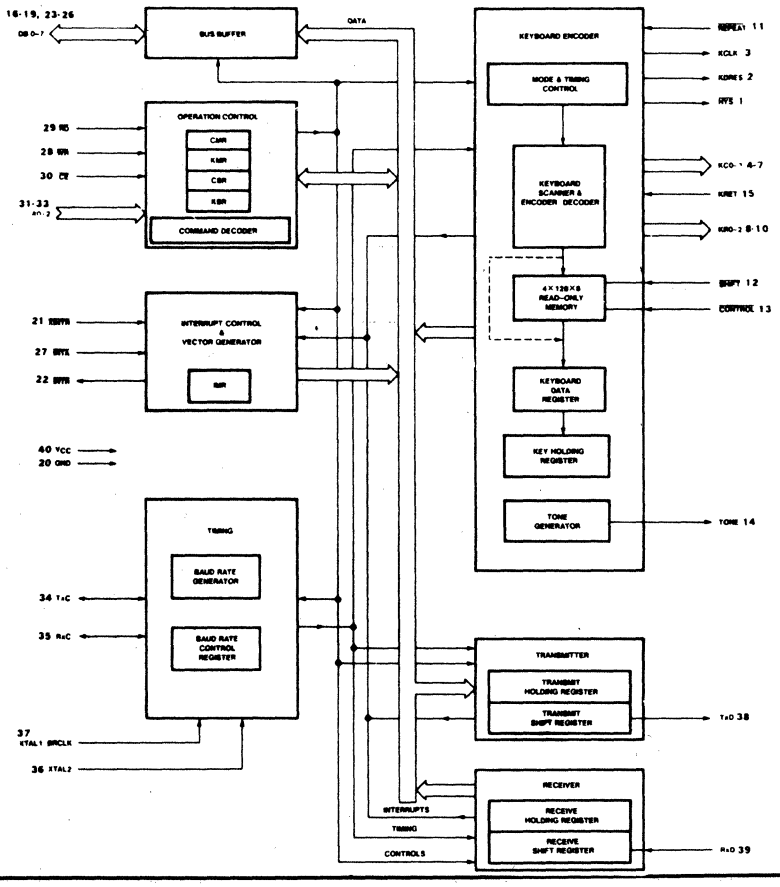

22. LOGIC/BLOCK DRAWINGS

E45-4

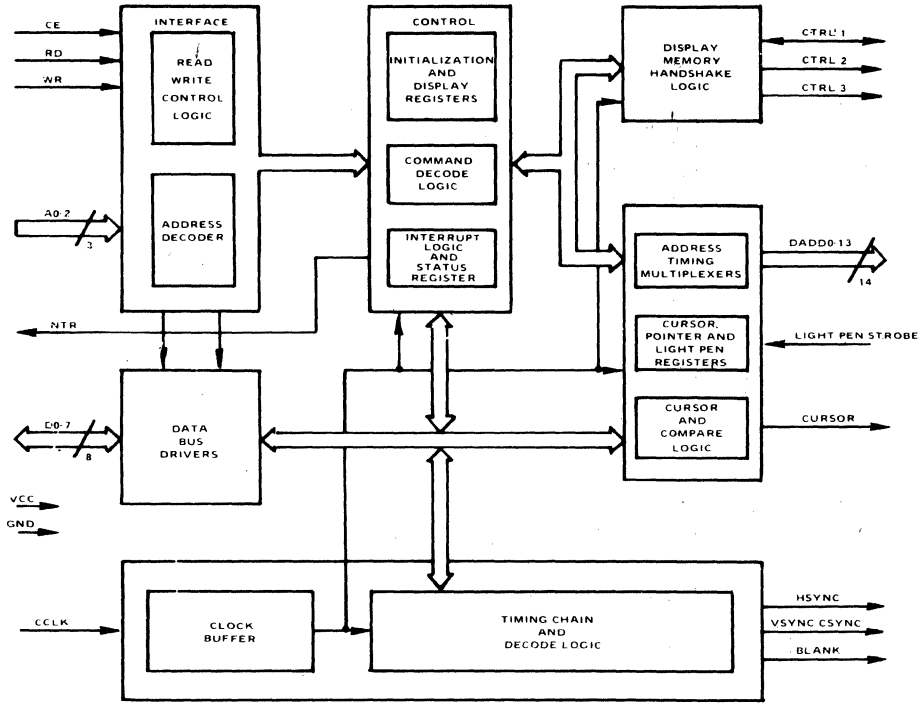

E45-5

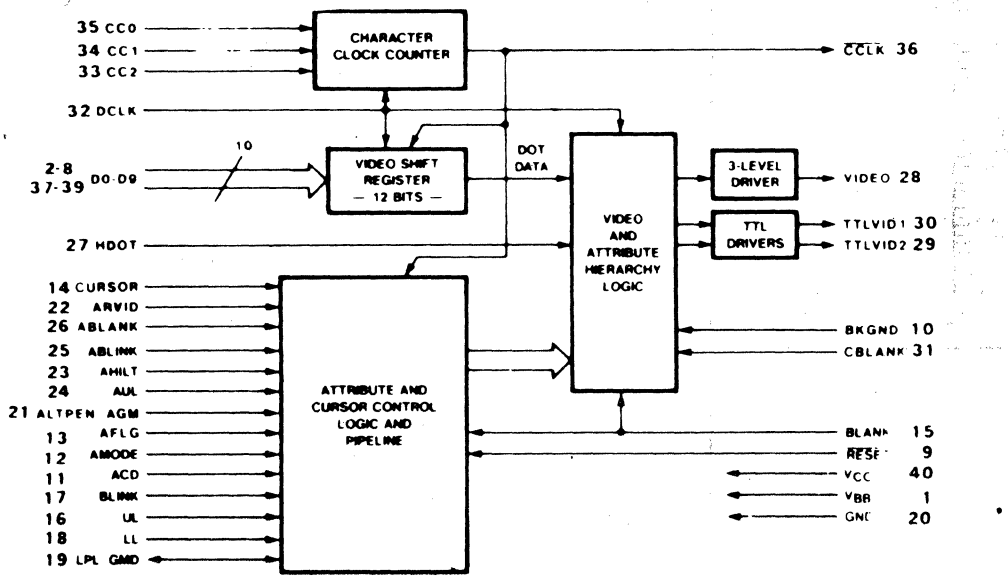

22. LOGIC/BLOCK DRAWINGS

E45-7

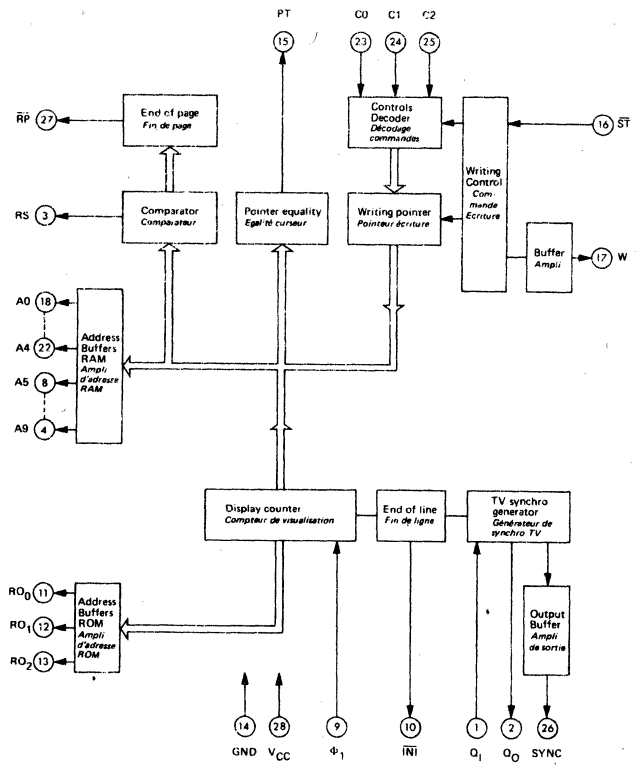

E50-1 Teletext timing chain for U.S.A. 525 line system

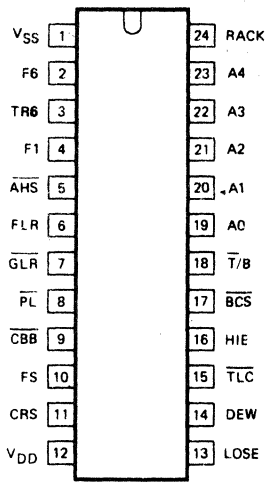

INTERPRETER — MEMORY DISCONTINUED DEVICES
SYMBOLS AND CODES EXPLAINED

★ SYMBOLS & CODES COMMON TO MORE THAN ONE SECTION

TYPE NUMBER

- #ai(A) – Advanced Information — This information is on a new product that is in sampling, pre-production or first production stage. Specifications and information are subject to change without notice. D.A.T.A. will update as information becomes available.
- #ob — Do Not Use in New Design — This part will be discontinued in the near future and should not be used in new designs.
- #1, #2 – Device has two or more modes of operation — listed on separate lines in the same technical section.
- RT — Suffix indicates device is a replacement type; consult manufacturer.
- ⊡ — Indicators of separate manufacturers producing same type number (non-JEDEC), whose characteristics are not the same. This manufacturer-identifying symbol (assigned by D.A.T.A.) is an integral part of the type number (in Type No. Cross Index, Technical Data Sections) to avoid the possibility of confusing the devices of one manufacturer with the devices of others.
- #mil(M) – Indicates type is available with MIL-STD-883 screening and/or MIL-STD-883B/C screening with preburn in tests and burn in, consult Mfr for ordering information.
- % — (Sect. 4 & 6) Device requires companion device to complete code; see logic drawing.

MINIMUM OUTPUT SINK CURRENT

- † — Typical
- # — Maximum
- $ — Minimum output source current
- ♦ — Minimum output high current
- Δ — Maximum output leakage current
- % — Minimum driving (fanout) current
- ⊡ — Absolute max, rated output current
- ∅ — At 25°C

LOGIC/BLOCK DRAWINGS

- A — RAMs
- B — ROMs
- C — Character Generators
- E — Code Converters
- F — Shift Registers
- Z — Special Devices
- § — Optional Terminal Connections available; consult manufacturer

MAX OPERATING POWER DISSIPATION

- † — Typical
- * — Minimum
- % — Per bit
- ♦ — Quiescent power dissipation
- ⊡ — Absolute maximum
- ∅ — At 25°C

OUTLINE DRAWINGS

- CY — TO 5-type (non-JEDEC)
- CH — Chip package
- FL — Flat package (non-JEDEC)
- ML — Molded or encapsulated package not included in other categories.
- MO — Standard JEDEC outline
- TO — Standard JEDEC outline
- — Package style only shown; no dimensions.

LINE NO.

- ▼ — New Type
- ♦ — Revised Specification
- # — Manufactured Outside U.S.A.

INPUT LOGIC LEVEL: MAX. 'O'

- † — Typical
- * — Minimum
- % — Output (no Input) value given. (This also applies for value given for '1' level).
- ♦ — Bipolar load only; can be adjusted for the MOS load. (Applies for '1' level value, also)
- ∅ — At 25°C

OPERATING TEMPERATURE CODE

0	—	0 up to 9°C
1	—	10 up to 19°C
2	—	20 up to 29°C
3	—	30 up to 39°C
4	—	40 up to 49°C
5	—	50 up to 59°C
6	—	60 up to 69°C
7	—	70 up to 79°C
8	—	80 up to 89°C
9	—	90 up to 99°C
A	—	100 up to 109°C
B	—	110 up to 119°C
C	—	120 up to 129°C
D	—	130 up to 139°C
E	—	140 up to 149°C
F	—	150 up to 159°C
G	—	160 up to 169°C
H	—	170 up to 179°C
J	—	180 up to 189°C
K	—	190 up to 199°C

▾ — USED IN NEGATIVE COLUMN TO INDICATE VALUE IS POSITIVE

EXAMPLES OF OPERATING TEMP. RANGE CODE:

5 — Min. value Lies between — 50°C and — 59°C

C — Max. value Lies between +120°C and +129°C

OR

1▾ — Min. value Lies between +10°C and +19°C

8 — Max. value Lies between +80°C and +89°C

STRUCTURE CODE

3-LETTER CODE: X X X

TECHNOLOGY

- B: Bipolar
- M: MOS
- T: Thin film

TYPE

- A: Amorphous
- C: Complementary Symmetry (N+P)
- N: N-Channel
- P: P-Channel

(A, C, N, P: MOS Only)

- D: DTL
- E: ECL
- I: IIL
- R: RTL
- T: TTL

(D, E, I, R, T: Bipolar Only)

- X: Not applicable or not specified

PROCESS

- A: Aluminum Gate
- C: Conventional
- D: Schottky Process
- G: Silicon Gate
- I: Ion-Implanted
- M: Metal — Nitride — Oxide — Silicon
- N: Silicon Nitride
- R: RMOS
- S: Silicon-On-Sapphire
- T: Thick Oxide
- X: Not Applicable or Not Specified

SYMBOLS

⊡ : More than one process used; only one is specified.

XSM 1

TYPE NUMBER	The manufacturer's designated type number for the device.
NUMBER WORDS	The total word capacity of the device.
BITS PER WORD	The word size, i.e., length, in bits.
MODE	The operating mode of the device; static, dynamic, or pseudo static.
STRUCTURE CODE	A 3 letter code indicating the type of technology and manufacturing processes used in fabricating the device (see table).
ACCESS TIME	The time interval between the address in becoming valid and valid data appearing at the output (chip enable being active and device is in the read mode).
WRITE CYCLE TIME	The total time required to complete a write cycle including address/data set-up time, write pulse width and data/address hold time (chip enable in the active state).
OPER POWER DISS	The "worst case" power dissipation under all possible working conditions allowable.
RATED POWER SUP SPAN NEG	The nominal value of power supply (–) input voltage at which the device specifications and parameters are valid.
RATED POWER SUP SPAN POS	The nominal value of power supply (+) input voltage at which the device specifications and parameters are valid.
INPUT LOGIC LEVEL "0"	The most positive (least negative) value of low level input voltage for which operation of the logic element, within specification limits, is guaranteed.
INPUT LOGIC LEVEL "1"	The least positive (most negative) value of high level input voltage for which operation of the logic element, within specification limits, is guaranteed.
OUTPUT SINK CURRENT	The current into the output terminal with input conditions applied that, according to product specifications, will establish a low level at the output.
@ OUT	The output voltage at which the output sink current is specified.
CLOCK FREQUENCY	Applies to dynamic type of devices whose data must be refreshed periodically or circulated continuously. This is the minimum required clock frequency for refresh or recirculation.
OPER TEMP RANGE CODE (–)	Minimum allowable ambient operating temperature (see table).
OPER TEMP RANGE CODE (+)	Maximum allowable ambient operating temperature (see table)
LOGIC/BLOCK DRAWING	Indicates location of logic or block diagram.
OUTLINE DRAWING	Indicates location of package outline drawing and dimensions.

2. READ-WRITE MEMORIES (RAMS)

IN ORDER OF (1)No.WORDS(2)No.BITS/WORD (3)MODE(4)STRUCT.(5)MAX ACC.TIME(6)TYPE No.

LINE No.	6 TYPE No.	ORGANIZATION 1 No. WORDS	2 BITS PER WORD	3 MODE	4 STRUCTURE CODE	5 MAX ACCESS TIME (s)	MAX WRITE CYCLE TIME (s)	MAX OPER. POWER DISS. (W)	RATED POWER SUP. SPAN NEG. (V)	POS. (V)	INPUT LOGIC LEVELS MAX '0' (V)	MIN '1' (V)	MIN OUTPUT SINK CURRENT (A)	@ OUT (V)	MIN CLOCK FREQ. (Hz)	OPER. TEMP. RANGE CODE -	+	DRAWINGS LOGIC/ BLOCK	OUTLINE
✪	✪		(4)	(5)	✪		(8)	✪			✪	(13)	✪		(16)	✪		✪	✪

(5) LETTER
- D – Dynamic
- S – Static
- P – Pseudo Static

(8)
- $ – Min. write-pulse width
- △ – Max. read-write cycle time

(13)
- △ – Open collector/drain output
- § – Three-state output

(16)
- △ – Max. refresh time (inverted)

✪ SYMBOLS AND CODES AT TOP OF FIRST INTERPRETER PAGE

TYPE NUMBER	The manufacturer's designated type number for the device.
NUMBER WORDS	The total word capacity of the device.
BITS PER WORD	The word size, i.e., length, in bits.
OP MODE PROG CODE	A 2 letter code indicating operating mode (i.e., static/dynamic) and programming procedure (i.e., mask/electrical).
STRUCTURE CODE	A 3 letter code indicating the type of technology and manufacturing processes used in fabricating the device (see table).
ACCESS TIME	The time interval between the address in becoming valid and valid data appearing at the output (chip enable being active and device is in the read mode).
OPER POWER DISS	The "worst case" power dissipation under all possible working conditions allowable.
RATED POWER SUP SPAN NEG	The nominal value of power supply (–) input voltage at which the device specifications and parameters are valid.
RATED POWER SUP SPAN POS	The nominal value of power supply (+) input voltage at which the device specifications and parameters are valid.
INPUT LOGIC LEVEL "0"	The most positive (least negative) value of low level input voltage for which operation of the logic element, within specification limits, is guaranteed.
INPUT LOGIC LEVEL "1"	The least positive (most negative) value of high level input voltage for which operation of the logic element, within specification limits, is guaranteed.
OUTPUT SINK CURRENT	The current into the output terminal with input conditions applied that, according to product specifications, will establish a low level at the output.
@ OUT	The output voltage at which the output sink current is specified.
OPER TEMP RANGE CODE (–)	Minimum allowable ambient operating temperature (see table).
OPER TEMP RANGE CODE (+)	Maximum allowable ambient operating temperature (see table).
GENERAL DESCRIPTION	Special circuit features, characteristics or options.
LOGIC/BLOCK DRAWING	Indicates location of logic or block diagram.
OUTLINE DRAWING	Indicates location of package outline drawing and dimensions.

3. READ ONLY MEMORIES (ROMS)

IN ORDER OF (1)No.WDS(2)No.BITS/WD(3)OP.MODE PRG.CODE(4)STRUCT.(5)MAX ACC.TIME(6)TYPE No.

LINE No.	6 TYPE No.	ORGANIZATION 1 No. WORDS	2 BITS PER WORD	3 OP MODE PROG CODE	4 STRUCTURE CODE	5 MAX ACCESS TIME (s)	MAX OPER. POWER DISS. (W)	RATED POWER SUP. SPAN NEG. (V)	POS. (V)	INPUT LOGIC LEVELS MAX '0' (V)	MIN '1' (V)	MIN OUTPUT SINK CURRENT (A)	@ OUT (V)	OPER. TEMP. RANGE CODE -	+	GENERAL DESCRIPTION	DRAWINGS LOGIC/ BLOCK	OUTLINE
✪	✪			(5)	✪		✪			✪	(12)	✪		✪		(17)	✪	✪

(5)

LETTER CODE:

X

PROGRAM CODE

C: Mask programmable: custom program

E: Electrically programmable

S: Mask programmable: standard program (see the description column for program).

(12)

△ – Open collector/drain output

§ – Three-state output

ϕ – Active Pull-up (Totem Pole)

(17)

CS – Chip Select

EAROM – In-circuit Alterable ROM

EPROM – Erasable ROM

fc – Min. clock frequency

FO – Fan Out

KE – Key Encoder

MC – Mode Control

PLA – Programmable Logic Array (see PLA in Sec. 20-Special Memory Devices)

PR – Program

PROM – Fusable Link ROM

Pwr Sw – Power Switched/Power Down Capability

RMM – Read Mostly Memory

Std – Standard

TA – Transistor Array (see TRA in Sec. 20-Special Memory Devices)

TR – Max. refresh time

UV – Violet Erasable

✪ SYMBOLS AND CODES AT TOP OF FIRST INTERPRETER PAGE

TYPE NUMBER	The manufacturer's designated type number for the device.
USE CODE	A 3 letter code indicating operating mode, font and display type (see table).
NUMBER CHARACTERS	The character capacity of the device.
BITS PER CHARACTER	The total number of bits in the display matrix (obtained by multiplying the number of rows times the number of columns).
NUMBER OUTPUTS	The number of output lines available.
STRUCTURE CODE	A 3 letter code indicating the type of technology and manufacturing processes used in fabricating the device (see table).
ACCESS TIME	The time interval between the address in becoming valid and valid data appearing at the output (chip enable being active and device is in the read mode).
OPER POWER DISS	The "worst case" power dissipation under all possible working conditions allowable.
RATED POWER SUP SPAN NEG	The maximum allowable negative voltage (with respect to ground) that may be applied to the negative (–) supply terminal and still guarantee proper device operation.
RATED POWER SUP SPAN NEG	The nominal value of power supply (–) input voltage at which the device specifications and parameters are valid.
RATED POWER SUP SPAN POS	The nominal value of power supply (+) input voltage at which the device specifications and parameters are valid.
INPUT LOGIC LEVEL "1"	The least positive (most negative) value of high level input voltage for which operation of the logic element, within specification limits, is guaranteed.
OUTPUT SINK CURRENT	The current into the output terminal with input conditions applied that, according to product specifications, will establish a low level at the output.
@ OUT	The output voltage at which the output sink current is specified.
OPER TEMP RANGE CODE (–)	Minimum allowable ambient operating temperature (see table).
OPER TEMP RANGE CODE (+)	Maximum allowable ambient operating temperature (see table).
LOGIC/BLOCK DRAWING	Indicates location of logic or block diagram.
OUTLINE DRAWING	Indicates location of package outline drawing and dimensions.

4. CHARACTER GENERATORS

IN ORDER OF (1)USE CODE(2)No.CHARACTERS (3)NO.BITS/CHAR(4)STRUCT(5)ACCESS(6)TYPE NO.

LINE No.	6 TYPE No.	1 USE CODE	2 No. CHARACTERS	3 BITS PER CHAR.	4 No. OUTPUTS	5 STRUCTURE CODE	MAX ACCESS TIME (s)	MAX OPER. POWER DISS. (W)	RATED POWER SUP. SPAN NEG. (V)	RATED POWER SUP. SPAN POS. (V)	INPUT LOGIC LEVELS MAX '0' (V)	INPUT LOGIC LEVELS MIN '1' (V)	MIN OUTPUT SINK CURRENT (A)	MIN OUTPUT SINK CURRENT @ OUT (V)	OPER. TEMP. RANGE CODE -	OPER. TEMP. RANGE CODE +	DRAWINGS LOGIC/BLOCK	DRAWINGS OUTLINE
✪	✪	(3)			(6)	✪		✪			✪	(13)	✪		✪		✪	✪

(3)

3-LETTER CODE	X X X	
OPERATING MODE	FONT	DISPLAY
D: Dynamic	A: ASCII	A: Row or Column scan
S: Static	B: Alpha	C: Raster: Column scan
	C: Custom	R: Raster: Row scan
	E: EBCDIC	S: Segment or dot
	H: Hollerith (compressed)	T: CRT
	N: Numeric	X: Not specified
	S: Selectric	
	X: Not specified	

(6) LETTER CODE:
A: 7 x 8 Array

(13) △ – Open collector/drain output
§ – Three-state output

✪ SYMBOLS AND CODES AT TOP OF FIRST INTERPRETER PAGE

INTERPRETER — MEMORY DISCONTINUED DEVICES
SYMBOLS AND CODES EXPLAINED

TYPE NUMBER	The manufacturer's designated type number for the device.
CONVERSION CODE FRM	Indicates the code being converted from (see table).
CONVERSION CODE TO	Indicates the code being coverted to (see table).
NUMBER WORDS	The total word capacity of the device.
NUMBER CODE BITS IN	The size (number) of the input code.
NUMBER CODE BITS OUT	The size (number) of the output code.
MODE	The operating mode of the device; status, dynamic, or pseudo status.
STRUCTURE CODE	A 3 letter code indicating the type of technology and manufacturing processes used in fabricating the device (see table).
ACCESS TIME	The time interval between the address in becoming valid and valid data appearing at the output (chip enable being active and device is in the read mode).
OPER POWER DISS	The "worst case" power dissipation under all possible working conditions allowable.
RATED POWER SUP SPAN NEG	The nominal value of power supply (–) input voltage at which the device specifications and parameters are valid.
RATED POWER SUP SPAN POS	The nominal value of power supply (+) input voltage at which the device specifications and parameters are valid.
INPUT LOGIC LEVEL "0"	The most positive (least negative) value of low level input voltage for which operation of the logic element, within specification limits, is guaranteed.
INPUT LOGIC LEVEL "1"	The least positive (most negative) value of high level input voltage for which operation of the logic element, within specification limits, is guaranteed.
OUTPUT SINK CURRENT	The current into the output terminal with input conditions applied that, according to product specifications, will establish a low level at the output.
@ OUT	The output voltage at which the output sink current is specified.
OPER TEMP RANGE CODE (–)	Minimum allowable ambient operating temperature (see table).
OPER TEMP RANGE CODE (+)	Maximum allowable ambient operating temperature (see table).
LOGIC/BLOCK DRAWING	Indicates location of logic or block diagram.
OUTLINE DRAWING	Indicates location of package outline drawing and dimensions.

6. CODE CONVERTERS

IN ORDER OF(1)FROM CODE(2)TO CODE(3)No.WORDS (4)No.INPUT BITS(5)No.OUTPUT BITS(6)TYPE No.

LINE No.	6 TYPE No.	CONVERSION CODE 1 FRM	CONVERSION CODE 2 TO	3 No. WORDS	No. CODE BITS 4 IN	No. CODE BITS 5 OUT	MODE	STRUCTURE CODE	MAX ACCESS TIME (s)	MAX OPER. POWER DISS. (W)	RATED POWER SUP. SPAN NEG. (V)	RATED POWER SUP. SPAN POS. (V)	INPUT LOGIC LEVELS MAX '0' (V)	INPUT LOGIC LEVELS MIN '1' (V)	MIN OUTPUT SINK CURRENT (A)	MIN OUTPUT SINK CURRENT @ OUT (V)	OPER. TEMP. RANGE CODE -	OPER. TEMP. RANGE CODE +	DRAWINGS LOGIC/BLOCK	DRAWINGS OUTLINE
✪	✪	3	4				8			✪			✪	15	✪		✪		✪	✪

3 4 NUMBER:

1 –	USASCII	7 –	96-column
2 –	EBCDIC	8 –	Key Encoded
3 –	Selectric	9 –	Custom
4 –	BCD	10 –	Baudot
5 –	Binary	11 –	EIA RS244A
6 –	Hollerith	12 –	Non Return to Zero
		13 –	Modified Frequency Modulated

8 LETTER
D – Dynamic
S – Static

15 △ – Open collector/drain Output
§ – Three-state output

✪ SYMBOLS AND CODES AT TOP OF FIRST INTERPRETER PAGE

TYPE NUMBER	The manufacturer's designated type number for the device.
BITS PER REGISTER	Bit size (capacity) of the device.
NUMBER REGISTERS	Total number of registers the device contains.
OPER CODE	A 3 letter code designating type of input/output and operating mode (see table).
WORST CASE FREQUENCY	The maximum allowable operating frequency of the device.
STRUCTURE CODE	A 3 letter code indicating the type of technology and manufacturing processes used in fabricating the device (see table).
OPER POWER DISS	The "worst case" power dissipation under all possible working conditions allowable.
RATED POWER SUP SPAN NEG	The nominal value of power supply (–) input voltage at which the device specifications and parameters are valid.
RATED POWER SUP SPAN POS	The nominal value of power supply (+) input voltage at which the device specifications and parameters are valid.
INPUT LOGIC LEVEL "0"	The most positive (least negative) value of low level input voltage for which operation of the logic element, within specification limits, is guaranteed.
INPUT LOGIC LEVEL "1"	The least positive (most negative) value of high level input voltage for which operation of the logic element, within specification limits, is guaranteed.
PROP DELAY	The time delay between the 50% points on the input and output waveforms when the output changes state due to a change of input state.
OUTPUT SINK CURRENT	The current into the output terminal with input conditions applied that, according to product specifications, will establish a low level at the output.
@ OUT	The output voltage at which the output sink current is specified.
CLOCK FREQUENCY	Applies to dynamic type of devices whose data must be refreshed periodically or circulated continuously. This is the minimum required clock frequency for refresh or recirculation.
OPER TEMP RANGE CODE (–)	Minimum allowable ambient operating temperature (see table).
OPER TEMP RANGE CODE (+)	Maximum allowable ambient operating temperature (see table).
LOGIC/BLOCK DRAWING	Indicates location of logic or block diagram.
OUTLINE DRAWING	Indicates location of package outline drawing and dimensions.

7. SHIFT REGISTERS

IN ORDER OF(1)No.BITS/REG(2)No.REGISTERS (3)OP.CODE(4)MAX W/C FREQ(5)STRUCT(6)TYPE No

LINE No.	6 TYPE No.	ORGANIZATION 1 BITS PER REGISTER	ORGANIZATION 2 No. REGS	3 OPER. CODE	4 MAX WORST CASE FREQ. (Hz)	5 STRUCTURE CODE	MAX OPER. POWER DISS. (W)	RATED POWER SUP. SPAN NEG. (V)	RATED POWER SUP. SPAN POS. (V)	INPUT LOGIC LEVELS MAX '0' (V)	INPUT LOGIC LEVELS MIN '1' (V)	MAX PROP. DELAY (s)	MIN OUTPUT SINK CURRENT (A)	MIN OUTPUT SINK CURRENT @ OUT (V)	MIN CLOCK FREQ. (Hz)	OPER. TEMP. RANGE CODE -	OPER. TEMP. RANGE CODE +	DRAWINGS LOGIC/BLOCK	DRAWINGS OUTLINE
	✪			(5)		✪	✪			✪	(12)		✪			✪		✪	✪

(5)

3-LETTER CODE: X X X

INPUT	OUTPUT	OPERATING MODE
P: Parallel	P: Parallel	D: Dynamic
S: Series	S: Series	S: Static
B: Has both Parallel and Serial Inputs		

SYMBOLS

* – Device contains additional memory storage (see logic diagram)

(12)

Δ – Open collector/drain output

§ – Three-state output

✪ SYMBOLS AND CODES AT TOP OF FIRST INTERPRETER PAGE

INTERPRETER — MEMORY DISCONTINUED DEVICES
SYMBOLS AND CODES EXPLAINED

TYPE NUMBER	The manufacturer's designated type number for the device.
FUNCTION CODE	A 3 letter code indicating the device's main or basic function.
NUMBER WORDS	The total word capacity of the device.
BITS PER WORD	The word size, i.e., length, in bits.
OP MODE PROG CODE	A 2 letter code indicating operating mode (i.e., static/dynamic) and programming procedure (i.e., mask/electrical).
STRUCTURE CODE	A 3 letter code indicating the type of technology and manufacturing processes used in fabricating the device (see table).
ACCESS TIME*	The time interval between the address in becoming valid and valid data appearing at the output (chip enable being active and device is in the read mode).
OPER POWER DISS	The "worst case" power dissipation under all possible working conditions allowable.
RATED POWER SUP SPAN NEG	The nominal value of power supply (–) input voltage at which the device specifications and parameters are valid.
RATED POWER SUP SPAN POS	The nominal value of power supply (+) input voltage at which the device specifications and parameters are valid.
INPUT LOGIC LEVEL "0"	The most positive (least negative) value of low level input voltage for which operation of the logic element, within specification limits, is guaranteed.
INPUT LOGIC LEVEL "1"	The least positive (most negative) value of high level input voltage for which operation of the logic element, within specification limits, is guaranteed.
OUTPUT SINK CURRENT	The current into the output terminal with input conditions applied that, according to product specifications, will establish a low level at the output.
@ OUT	The output voltage at which the output sink current is specified.
OPER TEMP RANGE CODE (–)	Minimum allowable ambient operating temperature (see table).
OPER TEMP RANGE CODE (+)	Maximum allowable ambient operating temperature (see table).
GENERAL DESCRIPTION	Special circuit features, characteristics or options.
LOGIC/BLOCK DRAWING	Indicates location of logic or block diagram.
OUTLINE DRAWING	Indicates location of package outline drawing and dimensions.

20. SPECIAL MEMORY DEVICES

IN ORDER OF: (1)FUNCT CODE (2)NO. WORDS (3)BITS/WD (4)OP MODE (5)STRUCT &(6)TYPE NO.

LINE No.	6 TYPE No.	1 FUNCT-ION CODE	ORGANIZATION 2 No. WORDS	3 BITS per WORD	4 OP MODE PROG CODE	5 STRUC-TURE CODE	MAX. ACCES TIME (S)	MAX. OPER. PWR. DISS. (W)	RATED PWR. SUPPLY SPAN NEG. (V)	RATED PWR. SUPPLY SPAN POS. (V)	INPUT LOGIC LEVELS MAX. '0' (V)	INPUT LOGIC LEVELS MIN. '1' (V)	MIN. OUTPUT SINK CURRENT (A)	MIN. OUTPUT OUTPUT VOLT (V)	OUTPUT TEMP. RNG. CODE -	OUTPUT TEMP. RNG. CODE +	GENERAL DESCRIPT-ION	DRAWINGS LOGIC/ BLOCK	DRAWINGS OUT-LINE
✪	✪	(3)			(6)	✪	(8)	✪			✪	(13)	✪		✪		(18)	✪	✪

(3)
ATN – Arc Tan
CAM – Content Addressable Memory (CAM)
CCD – Charge-Coupled Device
COS – Cosine
DMC – Dynamic Memory Controller
MBM – Magnetic Bubble Memory
MBS – Magnetic Bubble Memory Support
MCT – Memory Controller
MDR – Memory Driver
MUL – Multipliers
PGA – Programmable Gate Array
PLA – Programmable Logic Array (PLA)
PLS – Programmable Logic Sequencer
PRP – Programmable ROM Patch
PMX – Programmable Multiplexer
RYG – Rhythm
SCN – Sine-Cosine
SIN – Sine
TRA – Transistor Array
SYS – Special Memory Systems and Subsystems

NOTE: For PGA's and PLA's the number in the "No. Words" column represents the max. no. of product terms (1 for PGA's); the number in the "Bits per word" column represents the no. of outputs.
For PMX's the number in the "No. Words" column represents the no. of multiplexer inputs; the figure in the "Bits per Word" column represents the no. of outputs.

(6)
2–LETTER CODE X X

OPERATING MODE
D: Dynamic (see description column for max. refresh time or min. clock freq.)
S: Static

PROGRAM CODE
C: Mask programmable: custom program
E: Electrically programmable
S: Mask programmable: standard program (see the description column for program)
W: Addressable writing

(8) $ – Propogation delay

(13) △ – Open collector/drain output
§ – Three-state output

(18) RAM/ROM – Two mode device (RAM/EAROM)
RHY – Rhythms
VAR – Variable
VOL – Volatile

✪ SYMBOLS AND CODES AT TOP OF FIRST INTERPRETER PAGE

1. TYPE No. CROSS INDEX

IN TYPE NUMBER SEQUENCE

TYPE No.	MFRS	Pg&Line
5AR174	RTN	96 - 34
5AR175	RTN	94 - 8
7AR174	RTN	96 - 35
7AR175	RTN	94 - 9
08C05	♦CGR	32 - 72
08C13	♦CGR	23 - 94
08C14	♦CGR	32 - 48
08C16	♦CGR	32 - 39
08C19	♦CGR	23 - 92
08C22	♦CGR	32 - 65
08C24	♦CGR	23 - 76
08C25	♦CGR	23 - 67
08C41	♦CGR	24 - 37
08C42	♦CGR	24 - 32
08C44	♦CGR	24 - 10
08C49	♦CGR	32 - 21
08C50	♦CGR	32 - 15
08C51	♦CGR	32 - 2
08C52	♦CGR	31 - 77
08C53	♦CGR	24 - 35
15C06	♦CGR	44 - 30
15C07	♦CGR	43 - 90
15C09	♦CGR	23 - 93
15C10	♦CGR	44 - 97
15C12	♦CGR	43 - 88
15C16	♦CGR	24 - 33
15C17	♦CGR	23 - 79
15C18	♦CGR	24 - 38
15C19	♦CGR	23 - 95
15C21	♦CGR	24 - 11
15C22	♦CGR	23 - 68
15C24	♦CGR	24 - 36
15C40	♦CGR	32 - 4
15C41	♦CGR	31 - 79
15C47	♦CGR	32 - 66
15C51	♦CGR	43 - 29
15C52	♦CGR	43 - 81
15C53	♦CGR	32 - 73
15C54	♦CGR	32 - 49
15C55	♦CGR	32 - 40
15C56	♦CGR	32 - 22
15C57	♦CGR	32 - 16
21F02B	MULB	37 - 67
PHIN	♦SIC	
21L02-1B	MULB	37 -102
PHIN	SIC	
21L02-3B	MULB	37 - 78
PHIN	SIC	
25C01	♦CGR	55 - 62
25C02	♦CGR	52 - 98
25C03	♦CGR	52 - 53
25C04	♦CGR	55 - 64
25C05	♦CGR	53 - 28
25C06	♦CGR	52 - 69
25C07	♦CGR	53 - 30
25C08	♦CGR	52 - 74
25C09	♦CGR	53 - 32
25C10	♦CGR	52 - 77
25C13	♦CGR	44 -100
25C14	♦CGR	44 - 98
25C15	♦CGR	44 - 95
25C16	♦CGR	44 - 13
25L01B	MULB	27 - 52
PHIN	♦SIC	
25LS22JC	RTN	99 - 10
25LS22JM	RTN	99 - 11
25LS22WC	RTN	99 - 12
25LS22WM	RTN	99 - 13
25LS23JC	RTN	99 - 14
25LS23JM	RTN	99 - 15
25LS23WC	RTN	99 - 16
25LS23WM	RTN	99 - 17
25LS194AJC	RTN	93 - 76
25LS194AJM	RTN	93 - 77
25LS194AWC	RTN	93 - 78
25LS194AWM	RTN	93 - 79
25LS195AJC	RTN	93 - 80
25LS195AJM	RTN	93 - 81
25LS195AWC	RTN	93 - 82
25LS195AWM	RTN	93 - 83
25LS299JC	RTN	99 - 18
25LS299JM	RTN	99 - 19
25LS299WC	RTN	99 - 20
25LS299WM	RTN	99 - 21
25LS670JC	RTN	20 - 22
25LS670JM	RTN	20 - 23
25LS670WC	RTN	20 - 24
25LS670WM	RTN	20 - 25
27LS02AFM	♦MMI	21 - 22
27LS02AJC	♦MMI	21 - 18
27LS02AJM	♦MMI	21 - 23
27LS02ANC	♦MMI	21 - 19
27LS03AFM	♦MMI	21 - 24
27LS03AJC	♦MMI	21 - 20
27LS03AJM	♦MMI	21 - 25
27LS03ANC	♦MMI	21 - 21
27S02AFM	♦MMI	21 - 14
27S02AJC	♦MMI	21 - 10
27S02AJM	♦MMI	21 - 15
27S02ANC	♦MMI	21 - 11
27S03AFM	♦MMI	21 - 16
27S03AJC	♦MMI	21 - 12
27S03AJM	♦MMI	21 - 17
27S03ANC	♦MMI	21 - 13
30C01	♦CGR	43 - 21
30C02	♦CGR	43 - 80
30C06	♦CGR	53 - 33
30C13	♦CGR	55 - 63
30C15	♦CGR	43 - 89
30C25	♦CGR	43 - 87
30C26	♦CGR	53 - 31
30C27	♦CGR	55 - 65
30C29	♦CGR	32 - 71
30C30	♦CGR	32 - 64

TYPE No.	MFRS	Pg&Line
30C31	♦CGR	32 - 46
30C32	♦CGR	32 - 37
30C50	♦CGR	44 - 14
30C66	♦CGR	53 - 29
30C67	♦CGR	52 - 54
30C68	♦CGR	52 - 70
30C71	♦CGR	52 - 75
30C82	♦CGR	52 - 99
30C83	♦CGR	44 - 99
30C89	♦CGR	44 -101
30C90	♦CGR	52 - 78
30C91	♦CGR	44 - 96
53LS080F	MMI	57 - 85
53LS080J	MMI	57 - 86
53LS080N	MMI	57 - 87
53LS081F	MMI	57 - 88
53LS081J	MMI	57 - 89
53LS081N	MMI	57 - 90
53LS140F	MMI	61 - 50
53LS140J	MMI	61 - 51
53LS140N	MMI	61 - 52
53LS141F	MMI	61 - 53
53LS141J	MMI	61 - 54
53LS141N	MMI	61 - 55
53LS240F	MMI	67 - 38
53LS240J	MMI	67 - 39
53LS240N	MMI	67 - 40
53LS241F	MMI	67 - 41
53LS241J	MMI	67 - 42
53LS241N	MMI	67 - 43
53LS280J	MMI	64 - 22
53LS280N	MMI	64 - 23
53LS281J	MMI	64 - 24
53LS281N	MMI	64 - 25
53LS440F	MMI	72 - 82
53LS440J	MMI	72 - 83
53LS440N	MMI	72 - 84
53LS441F	MMI	72 - 85
53LS441J	MMI	72 - 86
53LS441N	MMI	72 - 87
53LS480J	MMI	69 -107
53LS480N	MMI	69 -108
53LS481J	MMI	70 - 1
53LS481N	MMI	70 - 2
53LS482F	MMI	70 - 3
53LS482J	MMI	70 - 4
53LS482N	MMI	70 - 5
53LS483F	MMI	70 - 6
53LS483J	MMI	70 - 7
53LS483N	MMI	70 - 8
53LS840F	MMI	77 - 88
53LS840J	MMI	77 - 89
53LS840N	MMI	77 - 90
53LS841F	MMI	77 - 91
53LS841J	MMI	77 - 92
53LS841N	MMI	77 - 93
53LS880F	MMI	75 - 8
53LS880J	MMI	75 - 9
53LS880N	MMI	75 - 10
53LS881F	MMI	75 - 11
53LS881J	MMI	75 - 12
53LS881N	MMI	75 - 13
53LS1640J	MMI	81 - 58
53LS1640N	MMI	81 - 59
53LS1641J	MMI	81 - 60
53LS1641N	MMI	81 - 61
53LS1680F	MMI	80 - 33
53LS1680J	MMI	80 - 34
53LS1680N	MMI	80 - 35
53LS1681F	MMI	80 - 36
53LS1681J	MMI	80 - 37
53LS1681N	MMI	80 - 38
53MA14-1	GECB	100 - 93
53PS140F	MMI	60 -102
53PS140J	MMI	60 -103
53PS140N	MMI	60 -104
53PS141F	MMI	60 -105
53PS141J	MMI	60 -106
53PS141N	MMI	61 - 1
53PS240F	MMI	66 - 88
53PS240J	MMI	66 - 89
53PS240N	MMI	66 - 90
53PS241F	MMI	66 - 91
53PS241J	MMI	66 - 92
53PS241N	MMI	66 - 93
53PS280J	MMI	64 - 5
53PS280N	MMI	64 - 6
53PS281J	MMI	64 - 7
53PS281N	MMI	64 - 8
53PS440F	MMI	72 - 2
53PS440J	MMI	72 - 3
53PS440N	MMI	72 - 4
53PS441F	MMI	72 - 5
53PS441J	MMI	72 - 6
53PS441N	MMI	72 - 7
53PS480J	MMI	69 - 74
53PS480N	MMI	69 - 75
53PS481J	MMI	69 - 76
53PS481N	MMI	69 - 77
53PS482F	MMI	69 - 78
53PS482J	MMI	69 - 79
53PS482N	MMI	69 - 80
53PS483F	MMI	69 - 81
53PS483J	MMI	69 - 82
53PS483N	MMI	69 - 83
53PS840F	MMI	77 - 48
53PS840J	MMI	77 - 49
53PS840N	MMI	77 - 50
53PS841F	MMI	77 - 51
53PS841J	MMI	77 - 52
53PS841N	MMI	77 - 53
53PS880F	MMI	74 - 84
53PS880J	MMI	74 - 85
53PS880N	MMI	74 - 86

TYPE No.	MFRS	Pg&Line
53PS881F	MMI	74 - 87
53PS881J	MMI	74 - 88
53PS881N	MMI	74 - 89
53PS1640J	MMI	81 - 32
53PS1640N	MMI	81 - 33
53PS1641J	MMI	81 - 34
53PS1641N	MMI	81 - 35
53PS1680F	MMI	80 - 12
53PS1680J	MMI	80 - 13
53PS1680N	MMI	80 - 14
53PS1681F	MMI	80 - 15
53PS1681J	MMI	80 - 16
53PS1681N	MMI	80 - 17
53RA281J	MMI	63 - 93
53RA281N	MMI	63 - 94
53RA283J	MMI	63 - 95
53RA283N	MMI	63 - 96
53RA441F	MMI	71 -102
53RA481J	MMI	69 - 42
53RA481N	MMI	69 - 43
53RA483J	MMI	69 - 44
53RA483N	MMI	69 - 45
53RA841J	MMI	77 - 40
53RA841N	MMI	77 - 41
53RA881J	MMI	74 - 76
53RA881N	MMI	74 - 77
53RA883J	MMI	74 - 78
53RA883N	MMI	74 - 79
53RA1641J	MMI	81 - 36
53RA1641N	MMI	81 - 37
53RA1681J	MMI	79 -100
53RA1681N	MMI	79 -101
53RA1683J	MMI	79 -102
53RA1683N	MMI	79 -103
53RS441F	MMI	71 -103
53RS441J	MMI	71 -104
53RS441N	MMI	71 -105
53RS841J	MMI	77 - 42
53RS841N	MMI	77 - 43
53RS1641J	MMI	81 - 38
53RS1641N	MMI	81 - 39
53S080F	MMI	57 - 81
53S081F	MMI	57 - 82
53S140F	MMI	61 - 26
53S140J	MMI	61 - 27
53S140N	MMI	61 - 28
53S141F	MMI	61 - 29
53S141J	MMI	61 - 30
53S141N	MMI	61 - 31
53S240F	MMI	67 - 12
53S240J	MMI	67 - 13
53S240N	MMI	67 - 14
53S241F	MMI	67 - 15
53S241J	MMI	67 - 16
53S241N	MMI	67 - 17
53S280J	MMI	63 - 97
53S280N	MMI	63 - 98
53S281J	MMI	63 - 99
53S281N	MMI	63 -100
53S440F	MMI	72 - 39
53S440J	MMI	72 - 40
53S440N	MMI	72 - 41
53S441F	MMI	72 - 42
53S441J	MMI	72 - 43
53S441N	MMI	72 - 44
53S480J	MMI	69 - 46
53S480N	MMI	69 - 47
53S481J	MMI	69 - 48
53S481N	MMI	69 - 49
53S482F	MMI	69 - 50
53S482J	MMI	69 - 51
53S482N	MMI	69 - 52
53S483F	MMI	69 - 53
53S483J	MMI	69 - 54
53S483N	MMI	69 - 55
53S840F	MMI	77 -100
53S840J	MMI	77 -101
53S840N	MMI	77 -102
53S841F	MMI	77 -103
53S841J	MMI	77 -104
53S841N	MMI	77 -105
53S880F	MMI	74 - 64
53S880J	MMI	74 - 65
53S880N	MMI	74 - 66
53S881F	MMI	74 - 67
53S881J	MMI	74 - 68
53S881N	MMI	74 - 69
53S1640J	MMI	81 - 48
53S1640N	MMI	81 - 49
53S1641J	MMI	81 - 50
53S1641N	MMI	81 - 51
53S1680F	MMI	79 -110
53S1680J	MMI	80 - 1
53S1680N	MMI	80 - 2
53S1681F	MMI	80 - 3
53S1681J	MMI	80 - 4
53S1681N	MMI	80 - 5
54LS91J	RTN	99 - 40
54LS91W	RTN	99 - 41
54LS95BJ	RTN	92 - 21
54LS95BW	RTN	92 - 22
54LS164J	RTN	98 - 98
54LS164W	RTN	98 - 99
54LS170J	RTN	20 - 10
54LS170W	RTN	20 - 11
54LS174J	RTN	96 - 24
54LS174W	RTN	96 - 25
54LS175J	RTN	93 - 84
54LS175W	RTN	93 - 85
54LS194AJ	♦RTN	93 - 6
54LS194AW	♦RTN	93 - 7
54LS195AJ	RTN	93 - 8
54LS195AW	RTN	93 - 9
54LS295AJ	♦RTN	93 - 10

TYPE No.	MFRS	Pg&Line
54LS295AW	♦RTN	93 - 11
54LS395AJ	RTN	92 - 53
54LS395AW	RTN	92 - 54
54LS670J	RTN	20 - 12
55MA25-1	GECB	101 - 9
57LS376J	MMI	97 - 21
57S374J	MMI	97 - 48
57S376J	MMI	97 - 49
57S378J	MMI	97 - 50
63LS080F	MMI	57 - 91
63LS080J	MMI	57 - 92
63LS080N	MMI	57 - 93
63LS081F	MMI	57 - 94
63LS081J	MMI	57 - 95
63LS081N	MMI	57 - 96
63LS140F	MMI	61 - 32
63LS140J	MMI	61 - 33
63LS140N	MMI	61 - 34
63LS141F	MMI	61 - 35
63LS141J	MMI	61 - 36
63LS141N	MMI	61 - 37
63LS240F	MMI	67 - 21
63LS240J	MMI	67 - 22
63LS240N	MMI	67 - 23
63LS241F	MMI	67 - 24
63LS241J	MMI	67 - 25
63LS241N	MMI	67 - 26
63LS280J	MMI	64 - 26
63LS280N	MMI	64 - 27
63LS281J	MMI	64 - 28
63LS281N	MMI	64 - 29
63LS440F	MMI	72 - 59
63LS440J	MMI	72 - 60
63LS440N	MMI	72 - 61
63LS441F	MMI	72 - 62
63LS441J	MMI	72 - 63
63LS441N	MMI	72 - 64
63LS480J	MMI	70 - 9
63LS480N	MMI	70 - 10
63LS481J	MMI	70 - 11
63LS481N	MMI	70 - 12
63LS482F	MMI	70 - 13
63LS482J	MMI	70 - 14
63LS482N	MMI	70 - 15
63LS483F	MMI	70 - 16
63LS483J	MMI	70 - 17
63LS483N	MMI	70 - 18
63LS840F	MMI	77 - 94
63LS840J	MMI	77 - 95
63LS840N	MMI	77 - 96
63LS841F	MMI	77 - 97
63LS841J	MMI	77 - 98
63LS841N	MMI	77 - 99
63LS880F	MMI	75 - 14
63LS880J	MMI	75 - 15
63LS880N	MMI	75 - 16
63LS881F	MMI	75 - 17
63LS881J	MMI	75 - 18
63LS881N	MMI	75 - 19
63LS1640J	MMI	81 - 62
63LS1640N	MMI	81 - 63
63LS1641J	MMI	81 - 64
63LS1641N	MMI	81 - 65
63LS1680F	MMI	80 - 39
63LS1680J	MMI	80 - 40
63LS1680N	MMI	80 - 41
63LS1681F	MMI	80 - 42
63LS1681J	MMI	80 - 43
63LS1681N	MMI	80 - 44
63PS140F	MMI	61 - 2
63PS140J	MMI	61 - 3
63PS140N	MMI	61 - 4
63PS141F	MMI	61 - 5
63PS141J	MMI	61 - 6
63PS141N	MMI	61 - 7
63PS240F	MMI	66 - 94
63PS240J	MMI	66 - 95
63PS240N	MMI	66 - 96
63PS241F	MMI	66 - 97
63PS241J	MMI	66 - 98
63PS241N	MMI	66 - 99
63PS280J	MMI	64 - 9
63PS280N	MMI	64 - 10
63PS281J	MMI	64 - 11
63PS281N	MMI	64 - 12
63PS440F	MMI	72 - 8
63PS440J	MMI	72 - 9
63PS440N	MMI	72 - 10
63PS441F	MMI	72 - 11
63PS441J	MMI	72 - 12
63PS441N	MMI	72 - 13
63PS480J	MMI	69 - 84
63PS480N	MMI	69 - 85
63PS481J	MMI	69 - 86
63PS481N	MMI	69 - 87
63PS482F	MMI	69 - 88
63PS482J	MMI	69 - 89
63PS482N	MMI	69 - 90
63PS483F	MMI	69 - 91
63PS483J	MMI	69 - 92
63PS483N	MMI	69 - 93
63PS840F	MMI	77 - 54
63PS840J	MMI	77 - 55
63PS840N	MMI	77 - 56
63PS841F	MMI	77 - 57
63PS841J	MMI	77 - 58
63PS841N	MMI	77 - 59
63PS880F	MMI	74 - 90
63PS880J	MMI	74 - 91
63PS880N	MMI	74 - 92
63PS881F	MMI	74 - 93
63PS881J	MMI	74 - 94
63PS881N	MMI	74 - 95
63PS1640J	MMI	81 - 40

TYPE No.	MFRS	Pg&Line
63PS1640N	MMI	81 - 41
63PS1641J	MMI	81 - 42
63PS1641N	MMI	81 - 43
63PS1680F	MMI	80 - 18
63PS1680J	MMI	80 - 19
63PS1680N	MMI	80 - 20
63PS1681F	MMI	80 - 21
63PS1681J	MMI	80 - 22
63PS1681N	MMI	80 - 23
63RA281J	MMI	63 -101
63RA281N	MMI	63 -102
63RA283J	MMI	63 -103
63RA283N	MMI	63 -104
63RA441F	MMI	71 -106
63RA481J	MMI	69 - 56
63RA481N	MMI	69 - 57
63RA483J	MMI	69 - 58
63RA483N	MMI	69 - 59
63RA841J	MMI	77 - 44
63RA841N	MMI	77 - 45
63RA881J	MMI	74 - 80
63RA881N	MMI	74 - 81
63RA883J	MMI	74 - 82
63RA883N	MMI	74 - 83
63RA1641J	MMI	81 - 44
63RA1641N	MMI	81 - 45
63RA1681J	MMI	79 -104
63RA1681N	MMI	79 -105
63RA1683J	MMI	79 -106
63RA1683N	MMI	79 -107
63RS441F	MMI	71 -107
63RS441J	MMI	71 -108
63RS441N	MMI	72 - 1
63RS841J	MMI	77 - 46
63RS841N	MMI	77 - 47
63RS1641J	MMI	81 - 46
63RS1641N	MMI	81 - 47
63S080F	MMI	57 - 83
63S081F	MMI	57 - 84
63S140F	MMI	61 - 10
63S140J	MMI	61 - 11
63S140N	MMI	61 - 12
63S141F	MMI	61 - 13
63S141J	MMI	61 - 14
63S141N	MMI	61 - 15
63S240F	MMI	66 -104
63S240J	MMI	67 - 1
63S240N	MMI	67 - 2
63S241F	MMI	67 - 3
63S241J	MMI	67 - 4
63S241N	MMI	67 - 5
63S280J	MMI	64 - 1
63S280N	MMI	64 - 2
63S281J	MMI	64 - 3
63S281N	MMI	64 - 4
63S440F	MMI	72 - 20
63S440J	MMI	72 - 21
63S440N	MMI	72 - 22
63S441F	MMI	72 - 23
63S441J	MMI	72 - 24
63S441N	MMI	72 - 25
63S480J	MMI	69 - 60
63S480N	MMI	69 - 61
63S481J	MMI	69 - 62
63S481N	MMI	69 - 63
63S482F	MMI	69 - 64
63S482J	MMI	69 - 65
63S482N	MMI	69 - 66
63S483F	MMI	69 - 67
63S483J	MMI	69 - 68
63S483N	MMI	69 - 69
63S840F	MMI	77 - 65
63S840J	MMI	77 - 66
63S840N	MMI	77 - 67
63S841F	MMI	77 - 68
63S841J	MMI	77 - 69
63S841N	MMI	77 - 70
63S880F	MMI	74 - 70
63S880J	MMI	74 - 71
63S880N	MMI	74 - 72
63S881F	MMI	74 - 73
63S881J	MMI	74 - 74
63S881N	MMI	74 - 75
63S1640J	MMI	81 - 52
63S1640N	MMI	81 - 53
63S1641J	MMI	81 - 54
63S1641N	MMI	81 - 55
63S1680F	MMI	80 - 6
63S1680J	MMI	80 - 7
63S1680N	MMI	80 - 8
63S1681F	MMI	80 - 9
63S1681J	MMI	80 - 10
63S1681N	MMI	80 - 11
67LS376J	MMI	97 - 22
67LS376N	MMI	97 - 23
67S374J	MMI	97 - 51
67S374N	MMI	97 - 52
67S376J	MMI	97 - 53
67S376N	MMI	96 - 58
67S378J	MMI	97 - 54
67S378N	MMI	97 - 55
74LS91J	RTN	99 - 42
74LS91W	RTN	99 - 43
74LS95BJ	RTN	92 - 23
74LS95BW	RTN	92 - 24
74LS164J	RTN	98 -100
74LS164W	RTN	98 -101
74LS170J	RTN	20 - 13
74LS170W	RTN	20 - 14
74LS174J	RTN	96 - 26
74LS174W	RTN	96 - 27
74LS175J	RTN	93 - 86
74LS175W	RTN	93 - 87
74LS194AJ	RTN	93 - 12

♦-Mfr's data sheet available in microfilm service

Cur-In current D.A.T.A.BOOK
Obs-In this book
Δ-Registered with JEDEC by this manufacturer

1. TYPE No. CROSS INDEX

IN TYPE NUMBER SEQUENCE

TYPE No.	MFRS	Pg&Line
74LS194AW	RTN	93 - 13
74LS195AJ	RTN	93 - 14
74LS195AW	RTN	93 - 15
74LS295AJ	RTN	93 - 16
74LS295AW	RTN	93 - 17
74LS395AJ	RTN	92 - 55
74LS395AW	RTN	92 - 56
74LS670J	RTN	20 - 15
74LS670W	RTN	20 - 16
75S68J	♦MMI	21 - 58
85S68N	♦MMI	21 - 76
93L412DC	♦FSC	27 -105
93L412DM	♦FSC	27 -109
93L412FC	♦FSC	27 -106
93L412FM	♦FSC	28 - 1
93L415CC	FSC	34 - 87
93L420DC	♦FSC	25 - 95
93L420DM	♦FSC	25 -107
93L420FM	♦FSC	25 -108
93L421DC	♦FSC	26 - 51
93L421DM	♦FSC	26 - 54
93L421FM	♦FSC	26 - 55
93L421PC	♦FSC	26 - 52
370AJ	TSC	90 - 19
370AL	TSC	90 - 20
370BL	TSC	90 - 21
370CJ	TSC	90 - 22
370CL	TSC	90 - 23
370ML	TSC	90 - 24
375AJ	TSC	90 - 76
375AL	TSC	90 - 77
375BL	TSC	90 - 78
375CJ	TSC	90 - 79
375CL	TSC	90 - 80
375ML	TSC	90 - 81
511	♦DTC	95 - 84
511T	♦DTC	95 - 87
512	DTC	100 - 13
512T	DTC	100 - 14
513T	DTC	95 - 88
527	♦DTC	94 - 67
527T	♦DTC	94 - 75
569T	♦DTC	95 - 4
690A	DTC	90 -103
809-01#1	QDI	71 - 20
809-01#2	QDI	75 - 81
811-01	QDI	43 - 86
811-02	QDI	52 - 73
811-03#1	QDI	52 - 76
811-03#2	QDI	52 -102
1101ADM	♦AMD	27 - 22
1103-1IK	MULB	33 - 15
PHIN	♦SIC	
1103-1XA	MULB	33 - 16
PHIN	♦SIC	
1103IK	MULB	33 - 40
PHIN	♦SIC	
1103XA	MULB	33 - 41
PHIN	♦SIC	
1216	♦GTE	36 - 75
1217	♦GTE	36 - 74
1217A	♦GTE	36 - 73
1217B	♦GTE	36 - 71
1217C	♦GTE	36 - 69
1218	♦GTE	36 - 72
1218A	♦GTE	36 - 70
1218B	♦GTE	36 - 68
1218C	♦GTE	36 - 66
1301#1	♦ITL	63 - 44
1301#2	♦ITL	62 - 78
1311	ITL	84 - 13
1312	ITL	85 - 80
1313	ITL	85 - 81
1402	♦ITL	105 - 83
1402AB	MULB	105 - 75
PHIN	SIC	
1402AI	MULB	105 - 76
PHIN	SIC	
1403	♦ITL	106 - 80
1403ATA	MULB	106 - 65
PHIN	SIC	
1403AV	MULB	106 - 66
PHIN	SIC	
1404	♦ITL	107 - 54
1404ATA	MULB	107 - 28
PHIN	SIC	
1404AV	MULB	107 - 29
PHIN	SIC	
1405	♦ITL	106 - 20
1405K	MULB	106 - 25
PHIN	SIC	
1601#1	♦ITL	64 - 95
1601#2	♦ITL	62 - 82
1701#1	ITL	64 - 96
1701#2	ITL	62 - 83
1702	♦ITL	64 - 97
1801	GTE	38 - 94
1802	GTE	38 - 86
2048	♦GIC	43 - 93
2101-1F	MULB	30 - 42
PHIN	♦SIC	
	VALG	
2101-1N	PHIN	30 - 43
♦SIC	VALG	
2101-2F	MULB	30 - 59
PHIN	♦SIC	
	VALG	
2101-2N	PHIN	30 - 60
♦SIC	VALG	
2101F	MULB	29 -110
PHIN	♦SIC	
	VALG	
2102-1F	MULB	37 -103

cont.next col.

TYPE No.	MFRS	Pg&Line
2102-1F		
(cont.)	PHIN	
	SIC	
	VALG	
2102-1I	MULB	37 -104
	PHIN	
	SIC	
	VALG	
2102-1N	MULB	37 -105
	PHIN	
	SIC	
	VALG	
2102-2F	MULB	38 - 24
	PHIN	
	SIC	
	VALG	
2102-2I	MULB	38 - 25
	PHIN	
	SIC	
	VALG	
2102-2N	MULB	38 - 26
	PHIN	
	SIC	
	VALG	
2102AF	♦MULB	37 - 68
	PHIN	
	♦SIC	
	VALG	
2102AI	♦MULB	37 - 69
	PHIN	
	♦SIC	
	VALG	
2102AN	♦MULB	37 - 70
	PHIN	
	♦SIC	
	VALG	
2102B	MULB	38 - 53
	PHIN	
	SIC	
2102F	MULB	38 - 54
	PHIN	
	SIC	
	VALG	
2102I	MULB	38 - 55
	PHIN	
	SIC	
	VALG	
2102N	PHIN	38 - 56
	SIC	
	VALG	
2109-3	ITL	52 - 85
2109-4	ITL	52 - 90
2111-1IK	MULB	30 - 44
	PHIN	
	♦SIC	
2111-1N	PHIN	30 - 45
	♦SIC	
	VALG	
2111-1XA	MULB	30 - 46
	PHIN	
	♦SIC	
2111-2I	PHIN	30 - 61
	♦SIC	
	VALG	
2111-2IK	MULB	30 - 62
	PHIN	
	♦SIC	
2111-2N	PHIN	30 - 63
	♦SIC	
	VALG	
2111-2XA	MULB	30 - 64
	PHIN	
	♦SIC	
2111I	PHIN	30 - 96
	♦SIC	
	VALG	
2111IK	MULB	30 - 97
	PHIN	
	♦SIC	
2111N	PHIN	30 - 98
	♦SIC	
	VALG	
2111XA	MULB	30 - 99
	PHIN	
	♦SIC	
2112-1F	MULB	30 - 47
	PHIN	
	♦SIC	
	VALG	
2112-1N	MULB	30 - 48
	PHIN	
	♦SIC	
	VALG	
2112-2F	MULB	30 - 65
	PHIN	
	♦SIC	
	VALG	
2112-2N	MULB	30 - 66
	PHIN	
	♦SIC	
	VALG	
2112F	MULB	30 -100
	PHIN	
	♦SIC	
	VALG	
2112N	MULB	31 - 1
	PHIN	
	♦SIC	
	VALG	
2114-1CB	GTE	42 - 24
2114-1CE#mil	♦GTE	42 - 25
2114-2CA	GTE	40 - 49
2114-2CA#mil	GTE	42 - 30
2114-2CB	GTE	40 - 50
2114-2CE	GTE	40 - 51
2114-2CE#mil	GTE	42 - 31
2114-2ME	GTE	42 - 32
2114-3CA	GTE	41 - 21
2114-3CA#mil	GTE	42 - 51
2114-3CB	GTE	41 - 22
2114-3CE	GTE	41 - 23
2114-3ME	GTE	42 - 52
2114-UCA	GTE	42 - 65
2114A-4	ITL	42 -104
2114A-5	ITL	43 - 3
2114AL-1	ITL	42 - 95
2114AL-2	ITL	42 - 96
2114AL-3	ITL	42 - 97
2114AL-4	ITL	42 -105
2114UCA	GTE	42 - 66
2114UCA#mil	GTE	42 - 67
2114UCB	GTE	42 - 68
2114UCE	GTE	42 - 69
2114UCE#mil	GTE	42 - 70
2114UMA	GTE	42 - 71
2114UME	GTE	42 - 72
2114USA	GTE	42 - 73
2115F	MULB	37 - 20
	PHIN	
	SIC	
	VALG	
2115I	MULB	37 - 21
	PHIN	
	SIC	
	VALG	

TYPE No.	MFRS	Pg&Line
2115LF	MULB	37 - 22
	PHIN	
	SIC	
	VALG	
2115LI	MULB	37 - 23
	PHIN	
	SIC	
	VALG	
2115LN	MULB	37 - 24
	PHIN	
	SIC	
	VALG	
2115N	MULB	37 - 25
	PHIN	
	SIC	
	VALG	
2117-2	ITL	54 - 56
2117-3	ITL	54 - 66
2117-4	ITL	54 - 79
2118-3	ITL	54 -104
2118-4	ITL	54 -110
2118-7	ITL	55 - 7
2125F	SIC	37 - 26
	VALG	
2125I	SIC	37 - 27
	VALG	
2125LF	SIC	37 - 28
	VALG	
2125LI	SIC	37 - 29
	VALG	
2125LN	SIC	37 - 30
	VALG	
2125N	SIC	37 - 31
	VALG	
2141-2	♦GTE	51 - 81
	♦ITL	
2141-3	♦GTE	51 - 89
	♦ITL	
2141-4	♦GTE	51 -106
	♦ITL	
2141-5	♦GTE	52 - 13
	♦ITL	
2141-UCB	♦GTE	49 - 74
2141-UCE	♦GTE	49 - 75
2141L-3	♦ITL	51 - 90
2141L-4	♦ITL	51 -107
2141L-5	♦ITL	52 - 14
2142	ITL	41 - 75
2142-2	ITL	40 - 52
2142-3	ITL	41 - 24
2142L3	ITL	41 - 25
2142L	ITL	41 - 76
2147-6	ITL	51 - 80
2147H-3	ITL	51 - 63
2147H-4	ITL	51 - 64
2164-15	ITL	56 - 23
2164-20	ITL	56 - 35
2164-25	ITL	56 - 46
2180-4D	♦MMI	47 - 10
2180D	♦MMI	45 - 87
2316	♦ITL	79 - 39
2316E	♦ITL	79 - 48
2317	♦ITL	81 - 21
2364-4CJ	GTE	82 - 85
2364-4CK	GTE	82 - 86
2364-5CJ	GTE	82 - 87
2364-5CK	GTE	82 - 88
2364-30I	♦SIC	83 - 3
2364-35I	♦SIC	83 - 4
2364-45I	♦SIC	83 - 15
2501B	MULB	27 - 6
PHIN	SIC	
2501I	MULB	27 - 4
PHIN	SIC	
	VALG	
2501N	SIC	27 - 7
	VALG	
2502B	MULB	105 - 99
PHIN	♦SIC	
2502I	MULB	105 -100
PHIN	♦SIC	
2502N	♦SIC	105 -102
	VALG	
2503N	♦SIC	106 -106
	VALG	
2503TA	MULB	106 -104
PHIN	♦SIC	
	VALG	
2504N	♦SIC	107 - 79
	VALG	
2504TA	MULB	107 - 76
PHIN	♦SIC	
	VALG	
2504V	MULB	107 - 77
PHIN	♦SIC	
2506N	♦SIC	103 -101
	VALG	
2506T	MULB	103 - 94
♦PHIN	♦SIC	
	VALG	
2506V	MULB	103 - 95
♦PHIN	♦SIC	
2507N	♦SIC	103 -102
	VALG	
2507T	MULB	103 - 96
♦PHIN	♦SIC	
	VALG	
2507V	MULB	103 - 97
♦PHIN	♦SIC	
2508XC	MULB	33 - 39
PHIN	♦SIC	
2509A	MULB	102 - 2
PHIN	♦SIC	
2509K	MULB	102 - 3
PHIN	♦SIC	
	VALG	
2509N	♦SIC	102 - 4
	VALG	

TYPE No.	MFRS	Pg&Line
2510A	MULB	104 - 5
♦PHIN	♦SIC	
2510K	MULB	104 - 6
♦PHIN	♦SIC	
	VALG	
2510N	♦SIC	104 - 7
	VALG	
2511A	MULB	105 - 4
♦PHIN	♦SIC	
2511K	MULB	105 - 5
♦PHIN	♦SIC	
	VALG	
2511N	♦SIC	105 - 6
	VALG	
2512K	MULB	107 - 23
♦PHIN	♦SIC	
	VALG	
2513I	♦SIC	85 - 11
	VALG	
2513N	♦SIC	85 - 12
	VALG	
2513NXCM2140	MULB	85 - 10
♦PHIN	♦SIC	
2513NXCMXXXX#1		86 - 5
MULB	♦PHIN	
	♦SIC	
2513NXCMXXXX#2		86 - 9
MULB	♦PHIN	
	♦SIC	
2516I	♦SIC	84 - 49
	VALG	
2516IXCM2150	MULB	84 - 47
♦PHIN	♦SIC	
2516IXCMXXXX	MULB	85 -101
♦PHIN	♦SIC	
2516NXCM2150	MULB	84 - 48
♦PHIN	♦SIC	
2516NXCMXXXX	MULB	85 -102
♦PHIN	♦SIC	
2517N	SIC	103 -103
	VALG	
2517T	MULB	103 - 98
♦PHIN	♦SIC	
	VALG	
2517V	MULB	103 - 99
♦PHIN	♦SIC	
2518B	MULB	101 - 52
PHIN	♦SIC	
2518F	MULB	101 - 59
PHIN	♦SIC	
2518I	MULB	101 - 53
PHIN	♦SIC	
2518N	♦SIC	101 - 54
	VALG	
2519B	MULB	101 - 66
PHIN	♦SIC	
2519F	MULB	101 - 69
PHIN	♦SIC	
2519I	MULB	101 - 67
PHIN	♦SIC	
	VALG	
2519N	♦SIC	101 - 68
	VALG	
2521N	♦SIC	104 - 49
	VALG	
2521V	MULB	104 - 50
♦PHIN	♦SIC	
2522N	♦SIC	104 - 76
	VALG	
2522V	MULB	104 - 77
♦PHIN	♦SIC	
2524V	MULB	106 - 31
♦PHIN	♦SIC	
	VALG	
2525N	♦SIC	107 - 47
	VALG	
2525V	MULB	107 - 35
♦PHIN	♦SIC	
2526/CM3400	MULB	89 - 21
♦PHIN	♦SIC	
2526/CM3940	MULB	87 - 83
♦PHIN	♦SIC	
2526I#1	MULB	85 - 83
♦PHIN	♦SIC	
	VALG	
2526I#2	MULB	71 - 12
♦PHIN	♦SIC	
	VALG	
2526N#1	MULB	85 - 84
♦PHIN	♦SIC	
	VALG	
2526N#2	MULB	71 - 13
♦PHIN	♦SIC	
	VALG	
2527N	♦SIC	105 - 11
	VALG	
2527V	MULB	105 - 52
♦PHIN	♦SIC	
2528N	♦SIC	105 - 13
	VALG	
2528V	MULB	105 - 14
♦PHIN	♦SIC	
2529V	MULB	105 - 12
♦PHIN	♦SIC	
2530I	MULB	69 - 8
PHIN	♦SIC	
	VALG	
2530N	MULB	69 - 9
PHIN	♦SIC	
	VALG	
2532-1B	MULB	103 - 52
♦PHIN	♦SIC	
2532B	MULB	103 - 47
♦PHIN	♦SIC	
2532N	♦SIC	103 - 48
	VALG	

TYPE No.	MFRS	Pg&Line
2533N	♦SIC	107 - 90
	VALG	
2533V	MULB	107 - 94
♦PHIN	♦SIC	
2580I	MULB	77 - 37
PHIN	♦SIC	
	VALG	
2580N	MULB	77 - 38
PHIN	♦SIC	
	VALG	
2600-1F	MULB	78 -105
PHIN	♦SIC	
	VALG	
2600-1I	MULB	78 -106
PHIN	♦SIC	
	VALG	
2600-1N	MULB	78 -107
PHIN	♦SIC	
	VALG	
2600I	MULB	79 - 31
PHIN	♦SIC	
	VALG	
2601F	MULB	31 - 2
PHIN	SIC	
2602-1B	MULB	37 -106
PHIN	SIC	
2602-1I	MULB	37 -107
PHIN	SIC	
2602B	MULB	38 - 57
PHIN	SIC	
2602I	MULB	38 - 58
PHIN	SIC	
2604	MULB	47 - 35
PHIN	♦SIC	
2604A	MULB	47 - 36
PHIN	♦SIC	
2606-1B	MULB	30 - 49
PHIN	♦SIC	
2606-1F	PHIN	30 - 50
♦SIC	VALG	
2606-1I	PHIN	30 - 51
♦SIC	VALG	
2606-1N	PHIN	30 - 52
♦SIC	VALG	
2606B	MULB	30 - 92
PHIN	♦SIC	
2606F	PHIN	30 - 93
♦SIC	VALG	
2606I	PHIN	30 - 94
♦SIC	VALG	
2606N	PHIN	30 - 95
♦SIC	VALG	
2607I	♦MULB	74 - 37
PHIN	♦SIC	
	VALG	
2608-1F	PHIN	74 - 38
♦SIC	VALG	
2608-1I	♦MULB	74 - 39
PHIN	♦SIC	
	VALG	
2608-1N	♦MULB	74 - 40
PHIN	♦SIC	
	VALG	
2609F	♦MULB	86 - 24
PHIN	♦SIC	
	VALG	
2609I	♦MULB	86 - 25
PHIN	♦SIC	
	VALG	
2609N	♦MULB	86 - 26
PHIN	♦SIC	
	VALG	
2611IK	MULB	30 - 1
PHIN	SIC	
2611XA	MULB	30 - 2
PHIN	SIC	
2616-1F	♦MULB	78 -109
PHIN	♦SIC	
	VALG	
2616-1I	♦MULB	78 -110
PHIN	♦SIC	
	VALG	
2616-1N	♦MULB	79 - 1
PHIN	♦SIC	
	VALG	
2616I	MULB	79 - 8
PHIN	♦SIC	
	VALG	
2617-1F	♦MULB	79 - 2
PHIN	♦SIC	
	VALG	
2617-1I	♦MULB	79 - 3
PHIN	♦SIC	
	VALG	
2617-1N	♦MULB	79 - 4
PHIN	♦SIC	
	VALG	
2617I	MULB	79 - 9
PHIN	♦SIC	
	VALG	
2632A-35F	♦SIC	81 - 99
2632A-35I	♦SIC	81 -100
2632A-35N	♦SIC	81 -101
2632F	♦MULB	81 -104
PHIN	SIC	
2632I	♦MULB	81 -105
PHIN	SIC	
2660-1F	MULB	47 - 37
PHIN	♦SIC	
	VALG	
2660-1I	MULB	47 - 38
PHIN	♦SIC	
	VALG	

♦-Mfr's data sheet available in microfilm service

Cur-In current D.A.T.A.BOOK
△-Registered with JEDEC by this manufacturer

Obs-In this book

1. TYPE No. CROSS INDEX

IN TYPE NUMBER SEQUENCE

TYPE No.	MFRS	Pg&Line
2660-1N	MULB	47 - 39
PHIN	♦SIC	
	VALG	
2660-2F	MULB	47 - 97
PHIN	♦SIC	
	VALG	
2660-2I	MULB	47 - 98
PHIN	♦SIC	
	VALG	
2660-2N	MULB	47 - 99
PHIN	♦SIC	
	VALG	
2660-3F	MULB	46 - 52
PHIN	♦SIC	
	VALG	
2660-3I	MULB	46 - 53
PHIN	♦SIC	
	VALG	
2660-3N	MULB	46 - 54
PHIN	♦SIC	
	VALG	
2660F	MULB	46 - 55
PHIN	♦SIC	
	VALG	
2660I	MULB	46 - 56
PHIN	♦SIC	
	VALG	
2660N	MULB	46 - 57
PHIN	♦SIC	
	VALG	
2664A-35F	♦SIC	83 - 5
2664A-35I	♦SIC	83 - 6
2664A-35N	SIC	83 - 7
2664F	♦MULB	83 - 16
PHIN	♦SIC	
2664I	♦MULB	83 - 17
PHIN	♦SIC	
2664N	♦MULB	83 - 18
PHIN	♦SIC	
2680-1F	MULB	47 - 11
PHIN	♦SIC	
	VALG	
2680-1I	♦SIC	47 - 12
	VALG	
2680-1N	♦SIC	47 - 13
	VALG	
2680-2F	MULB	47 -100
PHIN	♦SIC	
	VALG	
2680-2I	♦SIC	47 -101
	VALG	
2680-2N	♦SIC	47 -102
	VALG	
2680F	MULB	45 - 88
PHIN	♦SIC	
	VALG	
2680I	♦SIC	45 - 89
	VALG	
2680N	♦SIC	45 - 90
	VALG	
2690-2F	♦MULB	53 - 67
PHIN	♦SIC	
2690-2I	♦MULB	53 - 68
PHIN	♦SIC	
2690-2N	♦MULB	53 - 69
PHIN	♦SIC	
2690-3F	♦MULB	53 - 89
PHIN	♦SIC	
2690-3I	♦MULB	53 - 90
PHIN	♦SIC	
2690-3N	♦MULB	53 - 91
PHIN	♦SIC	
2690-4F	♦MULB	54 - 12
PHIN	♦SIC	
2690-4I	♦MULB	54 - 13
PHIN	♦SIC	
2690-4N	♦MULB	54 - 14
PHIN	♦SIC	
2704I	MULB	70 -102
PHIN	SIC	
	VALG	
2708I	MULB	76 - 4
PHIN	SIC	
	VALG	
2808	♦ITL	76 - 45
3300-4-5F	♦FSC	100 - 72
3303-4-5F	♦FSC	100 - 98
3303-9-5F	♦FSC	100 - 99
3304-4-5F	♦FSC	100 - 52
3304-9-5F	♦FSC	100 - 53
3305-4-5F	♦FSC	100 - 82
3305-4-6J	♦FSC	100 - 83
3306-4-5F	♦FSC	101 - 33
3306-4-6J	♦FSC	101 - 34
3307-9-5F	FSC	103 -110
3320-4-5F	♦FSC	102 - 21
3325-9-5F	♦FSC	102 - 90
3530-4-6J	♦FSC	23 - 20
3539-1CD	♦GTE	31 - 88
3539-1CP	♦GTE	31 - 89
3539-2CD	♦GTE	31 - 95
3539-2CP	♦GTE	31 - 96
3539A	GTE	31 - 97
3539ACD	♦GTE	31 - 84
3539ACP	♦GTE	31 - 85
3539B	GTE	31 - 90
3539U	GTE	31 -102
3539UCD	♦GTE	31 -103
3539UCP	♦GTE	31 -104
3636-1	♦ITL	80 - 31
3636B-1	♦ITL	79 - 99
4027-2F	MULB	45 - 46
PHIN	SIC	

TYPE No.	MFRS	Pg&Line
4027-2I	MULB	45 - 47
PHIN	SIC	
4027-2N	MULB	45 - 48
PHIN	SIC	
4027-3F	MULB	45 - 91
PHIN	SIC	
4027-3I	MULB	45 - 92
PHIN	SIC	
4027-3N	MULB	45 - 93
PHIN	SIC	
4027-4F	MULB	46 - 58
PHIN	SIC	
4027-4I	MULB	46 - 59
PHIN	SIC	
4027-4N	MULB	46 - 60
PHIN	SIC	
4044UCA	GTE	51 - 49
4044UCB	♦GTE	51 - 50
4044UCE	♦GTE	51 - 51
4104	GTE	42 - 47
4104ACC	GTE	42 - 33
4104ACP	GTE	42 - 34
4104BCC	GTE	42 - 26
4104BCP	GTE	42 - 27
4104UMC	GTE	42 - 48
4104USC	GTE	42 - 35
4200	GTE	51 - 33
4200A	GTE	51 - 19
4200ACC	GTE	51 - 20
4200ACD	GTE	51 - 21
4200ACP	GTE	51 - 22
4200BCC	GTE	51 - 11
4200BCD	GTE	51 - 12
4200BCP	GTE	51 - 13
4200UMC	GTE	51 - 34
4200USC	GTE	51 - 23
4300ACC	GTE	51 - 8
4300ACD	GTE	51 - 9
4300ACP	GTE	51 - 10
4402	♦GTE	51 - 24
4402ACC	♦GTE	51 - 14
4402ACD	♦GTE	51 - 15
4402BCC	♦GTE	51 - 3
4402BCD	♦GTE	51 - 4
4502-ACD	GTE	50 - 94
4502ABD	GTE	50 - 95
4557BDC	♦FSC	102 - 25
4557BDM	♦FSC	102 - 26
4557BFC	♦FSC	102 - 27
4557BFM	♦FSC	102 - 28
4557BPC	♦FSC	102 - 29
4721BDC	♦FSC	29 - 34
4721BDM	♦FSC	29 - 35
4721BFC	♦FSC	29 - 36
4721BFM	♦FSC	29 - 37
4721BPC	♦FSC	29 - 38
4735BDC	♦FSC	63 - 26
4735BDM	♦FSC	63 - 27
4735BFC	♦FSC	63 - 28
4735BFM	♦FSC	63 - 29
4735BPC	♦FSC	63 - 30
4736BDC	♦FSC	36 - 50
4736BDM	♦FSC	36 - 51
4736BFC	♦FSC	36 - 52
4736BFM	♦FSC	36 - 53
4736BPC	♦FSC	36 - 54
4801	♦GTE	51 - 60
4801A	♦GTE	51 - 52
4801ACC	♦GTE	51 - 53
4801B	♦GTE	51 - 45
4801BCC	♦GTE	51 - 46
4801C	♦GTE	51 - 44
4801UCC	♦GTE	51 - 61
4804	♦GTE	42 - 92
4804A	♦GTE	42 - 74
4804ACC	♦GTE	42 - 75
4804B	♦GTE	42 - 63
4804BCC	♦GTE	42 - 64
4804C	♦GTE	42 - 62
4804UCC	♦GTE	42 - 93
5055J	MMI	84 - 89
5056J	MMI	84 - 28
5061J	MMI	85 - 33
5062J	MMI	84 - 59
5071J	MMI	85 - 17
5072J	MMI	85 - 39
5073J	MMI	84 - 64
5074J	MMI	84 - 51
5086D	♦MMI	110 - 3
5155J	MMI	84 - 90
5156J	MMI	84 - 29
5161J	MMI	85 - 34
5162J	MMI	84 - 60
5171J	MMI	85 - 18
5172J	MMI	85 - 40
5173J	MMI	84 - 65
5174J	MMI	84 - 52
5200-1D	♦MMI	59 - 97
5200-1F	♦MMI	59 - 98
5200-1J	♦MMI	59 - 99
5200-1N	♦MMI	59 -100
5200D	♦MMI	60 - 13
5200J	♦MMI	60 - 14
5200N	♦MMI	60 - 15
5201-1D	♦MMI	59 -101
5201-1F	♦MMI	59 -102
5201-1J	♦MMI	59 -103
5201-1N	♦MMI	59 -104
5201D	♦MMI	60 - 16
5201J	♦MMI	60 - 17
5201N	♦MMI	60 - 18
5205-1D	♦MMI	66 - 1
5205-1F	♦MMI	66 - 2
5205-1J	♦MMI	66 - 3

TYPE No.	MFRS	Pg&Line
5205-1N	♦MMI	66 - 4
5205D	♦MMI	66 - 28
5205J	♦MMI	66 - 29
5205N	♦MMI	66 - 30
5206-1D	MMI	66 - 5
5206-1F	♦MMI	66 - 6
5206-1J	♦MMI	66 - 7
5206-1N	♦MMI	66 - 8
5206D	♦MMI	66 - 31
5206J	♦MMI	66 - 32
5206N	♦MMI	66 - 33
5208-1J	♦MMI	63 - 4
5208-1N	♦MMI	63 - 5
5209-1J	♦MMI	63 - 6
5209-1N	♦MMI	63 - 7
5210-1F	♦MMI	62 - 65
5210-1J	♦MMI	62 - 66
5210-1N	♦MMI	62 - 67
5210D	♦MMI	62 - 68
5210J	♦MMI	62 - 69
5210N	♦MMI	62 - 70
5225-1D	♦MMI	68 - 7
5225-1J	♦MMI	68 - 10
5225-1N	♦MMI	68 - 11
5225D	♦MMI	68 - 13
5230-1D	♦MMI	57 - 70
5230-1F	♦MMI	57 - 30
5230-1J	♦MMI	57 - 31
5230-1N	♦MMI	57 - 32
5230D	♦MMI	57 - 45
5230J	♦MMI	57 - 46
5230N	♦MMI	57 - 47
5231-1D	♦MMI	57 - 71
5231-1F	♦MMI	57 - 33
5231-1J	♦MMI	57 - 34
5231-1N	♦MMI	57 - 35
5231D	♦MMI	57 - 48
5231J	♦MMI	57 - 49
5231N	♦MMI	57 - 50
5235-1F	MMI	63 - 15
5235-1J	MMI	63 - 16
5235-1N	MMI	63 - 17
5236-1F	MMI	63 - 18
5236-1J	MMI	63 - 19
5236-1N	MMI	63 - 20
5240-1D	MMI	68 - 58
5240-1F	MMI	68 - 73
5240-1J	MMI	68 - 74
5240-1N	MMI	68 - 75
5241-1D	MMI	68 - 59
5241-1F	MMI	68 - 76
5241-1J	MMI	68 - 60
5241-1N	MMI	68 - 77
5242-1D	♦MMI	66 - 13
5242-1J	♦MMI	66 - 14
5243-1D	♦MMI	66 - 15
5243-1J	♦MMI	66 - 16
5246	♦MMI	62 - 77
5247	♦MMI	68 - 34
5248-1J	MMI	68 - 54
5248-1N	MMI	68 - 55
5249-1J	MMI	68 - 56
5249-1N	MMI	68 - 57
5250-1D	MMI	71 - 63
5250-1F	MMI	71 - 64
5250-1J	MMI	71 - 65
5250-1N	MMI	71 - 66
5251-1D	MMI	71 - 67
5251-1F	MMI	71 - 68
5251-1J	MMI	71 - 69
5251-1N	MMI	71 - 70
5252-1F	MMI	71 - 71
5252-1J	MMI	71 - 72
5252-1N	MMI	71 - 73
5253-1F	MMI	71 - 74
5253-1J	MMI	71 - 75
5253-1N	MMI	71 - 76
5255-1F	MMI	76 - 81
5255-1N	MMI	76 - 82
5255D	MMI	76 - 67
5256-1F	MMI	76 - 83
5256-1N	MMI	76 - 84
5260-1F	MMI	76 - 63
5260-1N	MMI	76 - 64
5260D	MMI	83 - 47
5261-1F	MMI	76 - 65
5261-1N	MMI	76 - 66
5275-1F	MMI	78 - 69
5275-1N	MMI	78 - 70
5275D	MMI	78 - 71
5275J	MMI	78 - 72
5276-1F	MMI	78 - 73
5276-1N	MMI	78 - 74
5276D	MMI	78 - 75
5276J	MMI	78 - 76
5280-1N	MMI	73 - 95
5280-2N	MMI	73 - 54
5280-IF24	none	75 - 70
5281-1N	MMI	73 - 96
5281-2N	MMI	73 - 55
5282-1N	MMI	73 - 97
5283-1N	MMI	73 - 98
5284-1F	MMI	73 - 99
5284-1J	MMI	73 -100
5284-1N	MMI	73 -101
5285-1F	MMI	73 -102
5285-1J	MMI	73 -103
5285-1N	MMI	73 -104
5286-1J	♦MMI	73 -105
5286-1N	♦MMI	73 -106
5286-2J	MMI	73 - 56
5286-2N	MMI	73 - 57
5287-1J	♦MMI	73 -107
5287-1N	♦MMI	73 -108

TYPE No.	MFRS	Pg&Line
5287-2J	MMI	73 - 58
5287-2N	MMI	73 - 59
5289-1J	MMI	73 -109
5289-1N	MMI	73 -110
5289-2J	MMI	73 - 60
5289-2N	MMI	73 - 61
5297	♦MMI	86 - 18
5299	♦MMI	85 - 94
5300-1D	MMI	61 - 80
5300-1N	MMI	61 - 61
5300D	MMI	61 - 81
5300J	MMI	61 - 82
5301-1D	MMI	61 - 83
5301-1N	MMI	61 - 62
5301D	MMI	61 - 84
5301J	MMI	61 - 85
5305-1D	♦MMI	67 - 94
5305-1N	♦MMI	67 - 52
5305D	♦MMI	67 - 70
5305J	♦MMI	67 - 71
5306-1D	♦MMI	67 - 95
5306-1N	♦MMI	67 - 53
5306D	♦MMI	67 - 72
5306J	♦MMI	67 - 73
5308-1N	MMI	64 - 62
5309-1N	MMI	64 - 63
5330-1D	♦MMI	58 - 57
5330-1N	♦MMI	57 -107
5330D	♦MMI	58 - 11
5330J	♦MMI	58 - 12
5331-1D	♦MMI	58 - 58
5331-1N	♦MMI	57 -108
5331D	♦MMI	58 - 13
5331J	♦MMI	58 - 14
5335-1D	MMI	64 - 78
5335-1F	MMI	64 - 64
5335-1J	MMI	64 - 65
5335-1N	MMI	64 - 66
5335D	MMI	64 - 79
5336-1D	MMI	64 - 80
5336-1F	MMI	64 - 67
5336-1J	MMI	64 - 68
5336-1N	MMI	64 - 69
5340-1D	MMI	70 - 84
5340-1F	MMI	70 - 47
5340-1N	MMI	70 - 48
5340D	MMI	70 - 85
5341-1D	MMI	70 - 86
5341-1F	MMI	70 - 49
5341-1N	MMI	70 - 50
5348-1D	MMI	70 - 80
5348-1N	MMI	70 - 51
5349-1D	MMI	70 - 81
5349-1N	MMI	70 - 52
5350-1D	MMI	71 - 98
5350-1N	MMI	72 - 88
5351-1D	MMI	71 - 99
5351-1N	MMI	72 - 89
5352-1D	MMI	71 -100
5352-1N	MMI	72 - 90
5353-1D	MMI	71 -101
5353-1N	MMI	72 - 91
5380-1D	MMI	75 - 90
5380-1F	MMI	75 - 58
5380-1N	MMI	75 - 59
5381-1D	MMI	75 - 91
5381-1F	MMI	75 - 60
5381-1N	MMI	75 - 61
5384-1F	MMI	75 - 62
5384-1J	MMI	75 - 63
5384-1N	MMI	75 - 64
5385-1F	MMI	75 - 65
5385-1J	MMI	75 - 66
5385-1N	MMI	75 - 67
5386-1D	♦MMI	75 - 92
5386-1J	♦MMI	75 - 68
5387-1D	♦MMI	75 - 93
5387-1J	♦MMI	75 - 69
5519	DTC	100 - 35
5520	♦DTC	99 -106
5521	♦DTC	99 -105
5527	♦DTC	94 - 76
5530	♦MMI	25 - 31
5530F	♦MMI	25 - 32
5530J	♦MMI	25 - 33
5530N	♦MMI	25 - 34
5531	♦MMI	25 - 35
5531F	♦MMI	25 - 36
5531J	♦MMI	25 - 37
5531N	♦MMI	25 - 38
5548	DTC	88 - 70
5549	DTC	88 - 74
5551BM	♦TSC	100 - 91
5551CM	♦TSC	100 - 92
5552BM	♦TSC	100 - 42
5552CM	♦TSC	100 - 43
5560D	♦MMI	21 - 87
5560F	♦MMI	21 - 99
5560J	♦MMI	21 -100
5560N	♦MMI	21 - 88
5561D	♦MMI	21 - 89
5561F	♦MMI	21 -101
5561J	♦MMI	21 -102
5561N	♦MMI	21 - 90
5584	♦DTC	22 - 72
5587#1	♦DTC	22 - 94
5587#2	♦DTC	22 - 7
5588#1	♦DTC	22 - 89
5588#2	♦DTC	22 - 99
5588#3	♦DTC	23 - 36
6055N	MMI	84 - 91
6056N	MMI	84 - 30
6061N	MMI	85 - 35
6062N	MMI	84 - 61

TYPE No.	MFRS	Pg&Line
6071N	MMI	85 - 19
6072N	MMI	85 - 41
6073N	MMI	84 - 66
6074N	MMI	84 - 53
6086D	♦MMI	110 - 4
6155N	MMI	84 - 92
6156N	MMI	84 - 31
6161N	MMI	85 - 36
6162N	MMI	84 - 62
6171N	MMI	85 - 20
6172N	MMI	85 - 42
6173N	MMI	84 - 67
6174N	MMI	84 - 54
6200-1D	♦MMI	59 - 76
6200-1F	♦MMI	59 - 77
6200-1J	♦MMI	59 - 78
6200-1N	♦MMI	59 - 79
6200D	♦MMI	60 - 19
6200J	♦MMI	60 - 20
6200N	♦MMI	60 - 21
6201-1D	♦MMI	59 - 80
6201-1F	♦MMI	59 - 81
6201-1J	♦MMI	59 - 82
6201-1N	♦MMI	59 - 83
6201D	♦MMI	60 - 22
6201J	♦MMI	60 - 23
6201N	♦MMI	60 - 24
6205-1D	♦MMI	65 - 97
6205-1F	♦MMI	65 - 98
6205-1J	♦MMI	65 - 99
6205-1N	♦MMI	65 -100
6205D	♦MMI	66 - 21
6205J	♦MMI	66 - 22
6205N	♦MMI	66 - 23
6206-1D	♦MMI	65 -101
6206-1F	♦MMI	65 -102
6206-1J	♦MMI	65 -103
6206-1N	♦MMI	65 -104
6206D	♦MMI	66 - 24
6206J	♦MMI	66 - 25
6206N	♦MMI	66 - 26
6208-1J	MMI	62 -106
6208-1N	MMI	62 -107
6209-1J	MMI	62 -108
6209-1N	MMI	62 -109
6210-1F	♦MMI	62 - 62
6210-1J	♦MMI	62 - 63
6210-1N	♦MMI	62 - 64
6210D	♦MMI	62 - 71
6210J	♦MMI	62 - 72
6210N	♦MMI	62 - 73
6225-1D	♦MMI	68 - 6
6225-1J	♦MMI	68 - 8
6225-1N	♦MMI	68 - 9
6225D	♦MMI	68 - 12
6230-1D	♦MMI	57 - 51
6230-1F	♦MMI	57 - 24
6230-1J	♦MMI	57 - 25
6230-1N	♦MMI	57 - 26
6230D	♦MMI	57 - 52
6230J	♦MMI	57 - 53
6230N	♦MMI	57 - 54
6231-1D	♦MMI	57 - 55
6231-1F	♦MMI	57 - 27
6231-1J	♦MMI	57 - 28
6231-1N	♦MMI	57 - 29
6231D	♦MMI	57 - 56
6231J	♦MMI	57 - 57
6231N	♦MMI	57 - 58
6235-1F	MMI	63 - 9
6235-1J	MMI	63 - 10
6235-1N	MMI	63 - 11
6236-1F	MMI	63 - 12
6236-1J	MMI	63 - 13
6236-1N	MMI	63 - 14
6240-1D	MMI	68 - 51
6240-1F	MMI	68 - 64
6240-1J	MMI	68 - 65
6240-1N	MMI	68 - 66
6241-1D	MMI	68 - 52
6241-1F	MMI	68 - 67
6241-1J	MMI	68 - 53
6241-1N	MMI	68 - 68
6242-1D	♦MMI	66 - 9
6242-1J	♦MMI	66 - 10
6243-1D	♦MMI	66 - 11
6243-1J	♦MMI	66 - 12
6246	♦MMI	62 - 76
6247	♦MMI	68 - 33
6248-1J	MMI	68 - 45
6248-1N	MMI	68 - 46
6249-1J	MMI	68 - 47
6249-1N	MMI	68 - 48
6250-1D	MMI	71 - 47
6250-1F	MMI	71 - 48
6250-1J	MMI	71 - 49
6250-1N	MMI	71 - 50
6251-1D	MMI	71 - 51
6251-1F	MMI	71 - 52
6251-1J	MMI	71 - 53
6251-1N	MMI	71 - 54
6252-1F	MMI	71 - 55
6252-1J	MMI	71 - 56
6252-1N	MMI	71 - 57
6253-1F	MMI	71 - 58
6253-1J	MMI	71 - 59
6253-1N	MMI	71 - 60
6255-1F	MMI	76 - 73
6255-1N	MMI	76 - 74
6255D	MMI	76 - 68
6256-1F	MMI	76 - 75
6256-1N	MMI	76 - 76
6260-1F	MMI	76 - 55
6260-1N	MMI	76 - 56

♦-Mfr's data sheet available in microfilm service

Cur-In current D.A.T.A.BOOK
Obs-In this book
△-Registered with JEDEC by this manufacturer

1. TYPE No. CROSS INDEX

IN TYPE NUMBER SEQUENCE

TYPE No.	MFRS	Pg&Line
6260D	MMI	83 - 48
6261-1F	MMI	76 - 57
6261-1N	MMI	76 - 58
6275-1F	MMI	78 - 61
6275-1N	MMI	78 - 62
6275D	MMI	78 - 63
6275J	MMI	78 - 64
6276-1F	MMI	78 - 65
6276-1N	MMI	78 - 66
6276D	MMI	78 - 67
6276J	MMI	78 - 68
6280-1N	MMI	73 - 70
6280-2N	MMI	73 - 38
6281-1N	MMI	73 - 71
6281-2N	MMI	73 - 39
6282-1F	MMI	73 - 72
6282-1N	MMI	73 - 73
6283-1N	MMI	73 - 74
6284-1F	MMI	73 - 75
6284-1J	MMI	73 - 76
6284-1N	MMI	73 - 77
6285-1F	MMI	73 - 78
6285-1J	MMI	73 - 79
6285-1N	MMI	73 - 80
6286-1J	♦MMI	73 - 81
6286-1N	♦MMI	73 - 82
6286-2J	MMI	73 - 40
6286-2N	MMI	73 - 41
6287-1J	MMI	73 - 83
6287-1N	MMI	73 - 84
6287-2J	MMI	73 - 42
6287-2N	MMI	73 - 43
6289-1J	MMI	73 - 85
6289-1N	MMI	73 - 86
6289-2J	MMI	73 - 44
6289-2N	MMI	73 - 45
6290N	MMI	86 - 16
6291N	MMI	86 - 17
6292N	MMI	85 - 92
6293N	MMI	85 - 93
6297	♦MMI	86 - 19
6299	♦MMI	85 - 95
6300-1D	MMI	61 - 86
6300-1N	MMI	61 - 38
6300D	MMI	61 - 87
6300J	MMI	61 - 88
6301-1D	MMI	61 - 89
6301-1N	MMI	61 - 39
6301D	MMI	61 - 90
6301J	MMI	61 - 91
6305-1D	♦MMI	67 - 68
6305-1N	♦MMI	67 - 27
6305D	♦MMI	67 - 74
6305J	♦MMI	67 - 75
6306-1D	♦MMI	67 - 69
6306-1N	♦MMI	67 - 28
6306D	♦MMI	67 - 76
6306J	♦MMI	67 - 77
6308-1J	MMI	64 - 43
6308-1N	MMI	64 - 44
6309-1J	MMI	64 - 45
6309-1N	MMI	64 - 46
6330-1D	♦MMI	58 - 15
6330-1J	♦MMI	57 - 97
6330-1N	♦MMI	57 - 98
6330D	♦MMI	58 - 16
6330J	♦MMI	58 - 17
6331-1D	♦MMI	58 - 18
6331-1J	♦MMI	57 - 99
6331-1N	♦MMI	57 -100
6331D	♦MMI	58 - 19
6331J	♦MMI	58 - 20
6335-1D	MMI	64 - 81
6335-1F	MMI	64 - 47
6335-1N	MMI	64 - 48
6335D	MMI	64 - 82
6336-1D	MMI	64 - 83
6336-1F	MMI	64 - 49
6336-1N	MMI	64 - 50
6340-1D	MMI	70 - 87
6340-1N	MMI	70 - 28
6340D	MMI	70 - 88
6341-1D	MMI	70 - 89
6341-1N	MMI	70 - 29
6348-1N	MMI	70 - 30
6349-1N	MMI	70 - 31
6350-1N	MMI	72 - 45
6351-1J	MMI	72 - 46
6351-1N	MMI	72 - 47
6352-1J	MMI	72 - 48
6352-1N	MMI	72 - 49
6353-1J	MMI	72 - 50
6353-1N	MMI	72 - 51
6380-1F	MMI	75 - 42
6380-1N	MMI	75 - 43
6381-1F	MMI	75 - 44
6381-1N	MMI	75 - 45
6384-1F	MMI	75 - 46
6384-1J	MMI	75 - 47
6384-1N	MMI	75 - 48
6385-1F	MMI	75 - 49
6385-1J	MMI	75 - 50
6385-1N	MMI	75 - 51
6386-1J	♦MMI	75 - 52
6387-1J	♦MMI	75 - 53
6530	♦MMI	25 - 9
6530N	♦MMI	25 - 10
6531	♦MMI	25 - 11
6531N	MMI	25 - 12
6560D	♦MMI	21 - 67
6560N	♦MMI	21 - 77
6561D	♦MMI	21 - 68
6561N	♦MMI	21 - 78
7005-11-6B	AMS	46 - 61

TYPE No.	MFRS	Pg&Line
7005-12-6B	AMS	47 - 40
7110	ITL	109 - 19
7110-3	ITL	109 - 20
7270-11-6E	AMS	45 - 94
7270-12-6E	AMS	47 - 14
7280-11-6D	AMS	45 - 95
7280-12-6D	AMS	47 - 15
7280-14-6D	AMS	47 -103
7491PC	TUNH	99 - 22
8108-3CD	♦GTE	43 - 75
8108-3MD	GTE	43 - 57
8108-5CD	GTE	43 - 78
8108-5MD	GTE	43 - 69
8118-3CJ	GTE	43 - 76
8118-3MD	GTE	43 - 58
8118-5CJ	GTE	43 - 79
8118-5MD	GTE	43 - 70
8308	GTE	43 - 77
9010-1200	DSI	52 - 51
9010-1210	DSI	43 - 19
9010-1230	DSI	52 - 52
9010-1231	DSI	43 - 18
9010-1250	DSI	43 - 20
9010-1322	DSI	80 -103
9010-1323	DSI	81 - 6
9010-1324	DSI	82 - 66
9010-1334	DSI	82 - 12
9200-1-4L	FSC	91 - 53
9200-1-7B	FSC	91 - 54
9200-9-4L	FSC	91 - 55
9200-9-7B	FSC	91 - 56
9228-1-4L	♦FSC	99 - 93
9228-1-7B	♦FSC	99 - 94
9228-9-4L	♦FSC	99 - 95
9228-9-7B	♦FSC	99 - 96
9300-1-3L	GECB	91 -104
9300-9-3L	GECB	91 -105
9410DC	♦FSC	21 - 85
9410DM	♦FSC	21 - 86
10149D	♦MMI	60 - 96
10410FC	FSC	24 - 61
10415FC	FSC	34 - 12
21143MA	GTE	42 - 53
29600DC	RTN	64 - 54
29600DM	RTN	64 - 73
29601DC	RTN	64 - 55
29601DM	RTN	64 - 74
29602DC	RTN	64 - 30
29602DM	RTN	64 - 56
29603DC	RTN	64 - 31
29603DM	RTN	64 - 57
29610DC	RTN	67 - 18
29610DM	RTN	67 - 44
29612DC	RTN	67 - 29
29612DM	RTN	67 - 54
29620DC	RTN	70 - 23
29620DM	RTN	70 - 53
29622DC	RTN	70 - 32
29622DM	RTN	70 - 55
29624DC	RTN	69 - 70
29624DM	RTN	69 - 71
29625DC	RTN	69 - 72
29625DM	RTN	69 - 73
29626DC	RTN	69 - 94
29626DM	RTN	69 - 95
29627DC	RTN	69 - 96
29627DM	RTN	69 - 97
29630DC	RTN	74 - 99
29630DM	RTN	74 -100
29632DC	RTN	75 - 2
29632DM	RTN	75 - 3
29634DC	RTN	74 -101
29634DM	RTN	74 -102
29635DC	RTN	74 -103
29635DM	RTN	74 -104
29636DC	RTN	75 - 4
29636DM	RTN	75 - 5
29637DC	RTN	75 - 6
29637DM	RTN	75 - 7
29640DC	RTN	72 - 52
29640DM	RTN	72 - 92
29641ADC#ai	RTN	81 - 56
29641ADM#ai	RTN	81 - 66
29641AFM#ai	RTN	81 - 67
29641DC	RTN	72 - 53
29641DC#ai	RTN	81 - 70
29641DM	RTN	72 - 93
29641DM#ai	RTN	81 - 72
29641FM#ai	RTN	81 - 73
29642DC	RTN	72 - 65
29642DM	RTN	72 - 94
29643ADC#ai	RTN	81 - 57
29643ADM#ai	RTN	81 - 68
29643AFM#ai	RTN	81 - 69
29643DC	RTN	72 - 66
29643DC#ai	RTN	81 - 71
29643DM	RTN	72 - 95
29643DM#ai	RTN	81 - 74
29643FM#ai	RTN	81 - 75
29650DC	RTN	77 -106
29650DM	RTN	78 - 16
29652DC	RTN	77 -107
29652DM	RTN	78 - 17
29660DC	RTN	61 - 56
29660DM	RTN	61 - 65
29661DC	RTN	61 - 57
29661DM	RTN	61 - 66
29662DC	RTN	61 - 40
29662DM	RTN	61 - 63
29663DC	RTN	61 - 41
29663DM	RTN	61 - 64
29680DC	RTN	80 - 46
29680DM	RTN	80 - 52
29682DC	RTN	80 - 49

TYPE No.	MFRS	Pg&Line
29682DM	RTN	80 - 53
29690DC	RTN	109 - 41
29690DM	RTN	109 - 42
29691DC	RTN	109 - 43
29691DM	RTN	109 - 44
29693DC	♦RTN	109 - 70
29693DM	♦RTN	109 - 71
29693FM	♦RTN	109 - 72
29700FM	♦MMI	21 - 59
29700JC	♦MMI	21 - 50
29700JM	♦MMI	21 - 60
29700NC	♦MMI	21 - 51
29701FM	♦MMI	21 - 61
29701JC	♦MMI	21 - 52
29701JM	♦MMI	21 - 62
29701NC	♦MMI	21 - 53
29702FM	♦MMI	21 - 63
29702JC	♦MMI	21 - 54
29702JM	♦MMI	21 - 64
29702NC	♦MMI	21 - 55
29703FM	♦MMI	21 - 65
29703JC	♦MMI	21 - 56
29703JM	♦MMI	21 - 66
29703NC	♦MMI	21 - 57
35391CD	GTE	31 - 91
35391CP	GTE	31 - 92
35392CD	GTE	31 - 98
35392CP	GTE	31 - 99
40194BDC	♦FSC	91 - 68
40194BDM	♦FSC	91 - 69
40194BFC	♦FSC	91 - 70
40194BFM	♦FSC	91 - 71
40194BPC	♦FSC	91 - 72
40195BDC	♦FSC	91 - 73
40195BDM	♦FSC	91 - 74
40195BFC	♦FSC	91 - 75
40195BFM	♦FSC	91 - 76
40195BPC	♦FSC	91 - 77
67401AN	♦MMI	102 -102
74172	SIEG	20 - 61
84172	SIEG	20 - 62
93400BDC	FSC	26 - 59
93400DC	♦FSC	26 - 56
93403-1-4L	♦FSC	22 - 26
93403-1-7B	♦FSC	22 - 27
93403-9-4L	♦FSC	22 - 28
93403DM	AMD	21 - 91
93403FM	AMD	21 - 92
93403PC	AMD	21 - 93
93406DC	♦FSC	60 - 25
93410AFC	♦FSC	25 - 96
93410APC	♦FSC	25 - 97
93410DC	♦FSC	26 - 3
93410DM	♦FSC	26 - 18
93410FC	♦FSC	26 - 4
93410FM	♦FSC	26 - 19
93410PC	♦FSC	26 - 5
93411ADC	♦FSC	25 - 98
	RTN	
93411DC	♦FSC	25 -109
	RTN	
93411DM	♦FSC	26 - 14
	RTN	
93411FC	FSC	25 -110
93411FM	♦FSC	26 - 15
93411PC	♦FSC	26 - 1
93411PM	FSC	26 - 26
93412DC	♦FSC	27 -103
93412DM	♦FSC	27 -107
93412FC	♦FSC	27 -104
93412FM	♦FSC	27 -108
93415AF	♦SIC	34 - 70
	VALG	
93415AI	MULB	34 - 71
PHIN	♦SIC	
93415AN	♦SIC	34 - 72
	VALG	
93416DC	♦FSC	62 - 18
93416DM	♦FSC	62 - 22
93417DC	♦FSC	61 - 16
93417DM	♦FSC	61 - 42
93417FC	♦FSC	61 - 17
93417FM	♦FSC	61 - 43
93417PC	♦FSC	61 - 18
93421ADC	♦FSC	25 - 81
	RTN	
93421DC	♦FSC	25 - 99
	RTN	
93421DM	♦FSC	26 - 6
	RTN	
93421FM	♦FSC	26 - 7
93421PC	♦FSC	25 -100
93425AF	♦SIC	34 - 73
	VALG	
93425AI	MULB	34 - 74
PHIN	♦SIC	
93425AN	♦SIC	34 - 75
	VALG	
93426DC	♦FSC	62 - 19
93426DM	♦FSC	62 - 23
93427DC	♦FSC	61 - 19
93427DM	♦FSC	61 - 44
93427FC	♦FSC	61 - 20
93427FM	♦FSC	61 - 45
93427PC	♦FSC	61 - 21
93433ADC	FSC	20 -102
93433AFC	FSC	20 -103
93433BDC	FSC	20 -104
93433BDM	FSC	20 -105
93433BFC	FSC	20 -106
93433BFM	FSC	20 -107
93434DC	♦FSC	57 - 59
93434DM	♦FSC	57 - 60
93435-1-6P	♦FSC	22 - 8

TYPE No.	MFRS	Pg&Line
93435DC	♦FSC	22 - 9
93436DC	♦FSC	67 - 6
93436DM	♦FSC	67 - 30
93436FC	♦FSC	67 - 7
93436FM	♦FSC	67 - 31
93436PC	♦FSC	67 - 8
93438DC	♦FSC	70 - 19
93446DC	♦FSC	67 - 9
93446DM	♦FSC	67 - 32
93446FC	♦FSC	67 - 10
93446FM	♦FSC	67 - 33
93446PC	♦FSC	67 - 11
93457DC	♦FSC	59 - 84
93457DM	♦FSC	59 -105
93457FC	♦FSC	59 - 85
93457FM	♦FSC	59 -106
93457PC	♦FSC	59 - 86
93464DC	♦FSC	73 - 35
93464DM	♦FSC	73 - 46
93464FC	♦FSC	73 - 36
93464FM	♦FSC	73 - 47
93464PC	♦FSC	73 - 37
93467DC	♦FSC	59 - 87
93467DM	♦FSC	59 -107
93467FC	♦FSC	59 - 88
93467FM	♦FSC	59 -108
93467PC	♦FSC	59 - 89
93470PC	♦FSC	48 - 96
93481ADC	♦FSC	45 - 24
93481AFC	♦FSC	45 - 25
93481APC	♦FSC	45 - 26
93481DC	♦FSC	45 - 27
93481FC	♦FSC	45 - 28
93481PC	♦FSC	45 - 29
95410DC	♦FSC	24 - 69
95415DC	FSC	34 - 9
100141D#ai	RTCF	97 - 61
100141F#ai	RTCF	97 - 62
100142D	none	109 - 7
100142D#ai	RTCF	109 - 8
280251E	AMD	105 - 61
280259E	AMD	105 - 62
280351E	AMD	106 - 48
280359E	AMD	106 - 49
280451E	AMD	107 - 12
280459E	AMD	107 - 13
85100111	AMS	22 - 98
85100211	AMS	22 -106
85100311	AMS	24 - 8
85100411	AMS	24 - 30
85100511	AMS	32 - 38
85100711	AMS	48 - 93
85100811	AMS	32 - 47
85500311	AMS	52 - 55
85500411	AMS	52 - 71
91100111	AMS	20 - 67
91100211	AMS	22 -109
91100311	AMS	24 - 2
91150311	AMS	24 - 5
91600111	AMS	33 - 94
91600111-6C	AMS	33 - 95
91600111-6D	AMS	33 - 96
91600211	AMS	33 - 89
91600311	AMS	43 -101
91700112-6D	AMS	38 - 82
91700112-6DP	AMS	38 - 83
91700115-6D	AMS	38 - 87
91700116-6D	AMS	38 - 89
A01	♦INS	22 - 78
A01FT	♦INS	22 - 79
A5240D	MMI	68 - 69
A5241D	MMI	68 - 70
A5280D	MMI	73 - 91
A5281D	MMI	73 - 92
A5503	♦INS	26 - 86
A5503FT	♦INS	26 - 87
A6240D	MMI	68 - 71
A6241D	MMI	68 - 72
A6280D	MMI	73 - 93
A6281D	MMI	73 - 94
AM21L47-45LC	none	51 - 62
AM27S08DC	♦AMD	57 -101
AM27S08DM	♦AMD	57 -102
AM27S09DC	♦AMD	57 -103
AM27S09DM	♦AMD	57 -104
AM27S10DC	♦AMD	61 - 46
AM27S10DM	♦AMD	61 - 47
AM27S11DC	♦AMD	61 - 48
AM27S11DM	♦AMD	61 - 49
AM27S26DC	♦AMD	69 -103
AM27S26DM	♦AMD	69 -104
AM27S80DC	♦AMD	73 - 29
AM27S80DM	♦AMD	73 - 30
AM27S80XX	♦AMD	73 - 31
AM27S180DMB	none	73 - 21
AM91L01AFM	AMD	31 - 69
AM91L01BFM	AMD	31 - 55
AM91L02ADC	AMD	37 -108
AM91L02ADM	AMD	38 - 1
AM91L02AFM	AMD	38 - 2
AM91L02APC	AMD	38 - 3
AM91L02BDC	AMD	37 - 79
AM91L02BDM	AMD	37 - 80
AM91L02BFM	AMD	37 - 81
AM91L02BPC	AMD	37 - 82
AM91L02CDC	AMD	37 - 61
AM91L02CDM	AMD	37 - 62
AM91L02CPC	AMD	37 - 63
AM91L02DC	AMD	38 - 27
AM91L02DM	AMD	38 - 28
AM91L02FM	AMD	38 - 29
AM91L02PC	AMD	38 - 30
AM91L11AFM	AMD	31 - 70
AM91L11BFM	AMD	31 - 56

TYPE No.	MFRS	Pg&Line
AM91L12AFM	AMD	31 - 71
AM91L12BFM	AMD	31 - 57
AM91L30APC	AMD	43 - 16
AM91L30BPC	AMD	43 - 14
AM91L30CPC	AMD	43 - 6
AM91L30DPC	AMD	43 - 4
AM91L40APC	AMD	51 - 58
AM91L40BPC	AMD	51 - 47
AM91L40CPC	AMD	51 - 41
AM91L40DPC	AMD	51 - 35
AM2533DC	AMD	107 - 91
AM2533V	AMD	107 - 92
AM9050CDC	♦AMD	47 - 41
AM9050CPC	♦AMD	47 - 42
AM9050DDC	♦AMD	46 - 62
AM9050DPC	♦AMD	46 - 63
AM9050EDC	♦AMD	45 - 96
AM9050EPC	♦AMD	45 - 97
AM9060CDC	♦AMD	47 - 43
AM9060CPC	♦AMD	47 - 44
AM9060DDC	♦AMD	46 - 64
AM9060DPC	♦AMD	46 - 65
AM9060EDC	♦AMD	45 - 98
AM9060EPC	♦AMD	45 - 99
AM9101	♦AMD	29 - 63
AM9101AFM	♦AMD	31 - 72
AM9101BFM	♦AMD	31 - 58
AM9101EDC	♦AMD	29 - 57
AM9101EPC	♦AMD	29 - 58
AM9102ADC	♦AMD	38 - 4
AM9102ADM	♦AMD	38 - 5
AM9102AFM	♦AMD	38 - 6
AM9102APC	♦AMD	38 - 7
AM9102BDM	♦AMD	37 - 83
AM9102BFM	♦AMD	37 - 84
AM9102BPC	♦AMD	37 - 85
AM9102CDC	♦AMD	37 - 64
AM9102CDM	♦AMD	37 - 65
AM9102CPC	♦AMD	37 - 66
AM9102DC	♦AMD	38 - 31
AM9102DDC	♦AMD	37 - 53
AM9102DM	♦AMD	38 - 32
AM9102DPC	♦AMD	37 - 54
AM9102EDC	♦AMD	36 - 76
AM9102EPC	♦AMD	36 - 77
AM9102FM	♦AMD	38 - 33
AM9102PC	♦AMD	38 - 34
AM9111	♦AMD	29 - 64
AM9111AFM	♦AMD	31 - 73
AM9111BFM	♦AMD	31 - 59
AM9111EDC	♦AMD	29 - 59
AM9111EPC	♦AMD	29 - 60
AM9112	♦AMD	29 - 65
AM9112AFM	♦AMD	31 - 74
AM9112EDC	♦AMD	29 - 61
AM9112EPC	♦AMD	29 - 62
AM9124EDC	♦AMD	42 - 36
AM9124EPC	♦AMD	42 - 37
AM9130APC	♦AMD	43 - 17
AM9130BPC	♦AMD	43 - 15
AM9130CPC	♦AMD	43 - 7
AM9130DPC	♦AMD	43 - 5
AM9130EPC	♦AMD	42 -106
AM9140APC	♦AMD	51 - 59
AM9140BPC	♦AMD	51 - 48
AM9140CPC	♦AMD	51 - 42
AM9140DPC	♦AMD	51 - 36
AM9140EPC	♦AMD	51 - 25
AM9208BDC	♦AMD	74 - 35
AM9208BDM	♦AMD	74 - 36
AM9208CDC	♦AMD	74 - 29
AM9214DC	♦AMD	68 - 42
AM9214DM	♦AMD	68 - 43
AM9216BDC	♦AMD	79 - 5
AM9216BDM	♦AMD	79 - 6
AM9216CDC	♦AMD	78 -108
AM9217ADC	♦AMD	79 - 32
AM9217ADM	♦AMD	79 - 33
AM9217BDC	♦AMD	79 - 10
AM9217BDM	♦AMD	79 - 11
AM270051E	AMD	25 - 66
AM270151E	AMD	25 - 67
AM280251E	AMD	105 - 63
AM280251F	AMD	105 - 64
AM280259E#1	AMD	105 - 65
AM280259E#2	AMD	105 - 66
AM280259F#1	AMD	105 - 67
AM280259F#2	AMD	105 - 68
AM280351F	AMD	106 - 50
AM280351T	AMD	106 - 51
AM280359F#1	AMD	106 - 52
AM280359F#2	AMD	106 - 53
AM280359T#1	AMD	106 - 54
AM280359T#2	AMD	106 - 55
AM280451F	AMD	107 - 82
AM280451T	AMD	107 - 83
AM280459F#1	AMD	107 - 84
AM280459F#2	AMD	107 - 85
AM280459T#1	AMD	107 - 86
AM280459T#2	♦AMD	107 - 87
AO1	INS	22 - 77
AO1FT	INS	22 - 80
AO2	INS	26 - 85
ASM10#1	AEX	32 - 10
ASM10#2	AEX	32 - 55
ASM30#1	AEX	32 - 9
ASM30#2	AEX	32 - 54
ASM30#3	AEX	43 - 85
AY5-2376	GIC	89 - 1
AY5-3600	♦GIC	89 - 2
AY5-3600-PRO	♦GIC	89 - 12
B200	♦FMI	109 - 31
B500	♦FMI	109 - 32
B2000	FMI	109 - 30

♦-Mfr's data sheet available in microfilm service

Cur-In current D.A.T.A.BOOK
Δ-Registered with JEDEC by this manufacturer

Obs-In this book

1. TYPE No. CROSS INDEX

IN TYPE NUMBER SEQUENCE

TYPE No.	MFRS	Pg&Line
B2107A1	ITL	47 - 30
B2107A4	ITL	47 -104
B2107A5	ITL	48 - 18
B2107A	ITL	47 - 45
B2107B4	ITL	47 - 16
B2107B6	ITL	47 -105
B2107B	ITL	45 -100
B2107B-4	ITL	47 - 17
B2107B-5	ITL	47 - 46
B2608	ITL	82 - 84
B2616	ITL	79 - 80
B2704	ITL	70 -103
B2708	ITL	76 - 5
B2708-1	ITL	75 -104
B2708L	ITL	76 - 6
B2716	ITL	79 - 97
B2716-1	ITL	79 - 95
B2716-2	ITL	79 - 96
B2758	ITL	74 - 61
C1101A1	AMD	27 - 8
	ITL	
C1101A1DM	AMD	27 - 9
C1101A51	AMD	27 - 23
C1101A	AMD	27 - 24
	ITL	
C1101ADM	AMD	27 - 25
C1103	ITL	33 - 42
C1103-1	ITL	33 - 17
C1103A1	ITL	33 - 7
C1103A2	ITL	33 - 8
C1103A	ITL	33 - 30
C1302	ITL	63 - 45
C1402A	ITL	105 - 84
C1601	AMD	64 - 98
C1602	AMD	62 - 86
C1602A6	ITL	65 - 5
C1602A	ITL	64 - 99
C1701	AMD	64 -100
C1702	AMD	62 - 87
C1702A2	ITL	64 - 84
C1702A6	ITL	64 - 93
C1702A	ITL	64 - 88
C1702AL2	ITL	64 - 85
C1702AL	ITL	64 - 89
C2000	FMI	109 - 33
C2101	AMD	31 - 3
	ITL	
C2101-2	AMD	30 - 67
	ITL	
C2101A2	ITL	29 - 66
C2101A4	ITL	30 - 4
C2101A	ITL	29 - 91
C2101A-2	ITL	29 - 67
C2101A-4	ITL	30 - 5
C2102	AMD	38 - 59
	ITL	
C2102-1	AMD	38 - 8
	ITL	
C2102-2	AMD	38 - 35
	ITL	
C2102-8	ITL	38 - 79
C2102A2	ITL	37 - 55
C2102A4	ITL	37 - 88
C2102A6	ITL	38 - 36
C2102A	ITL	37 - 71
C2104	ITL	47 -106
C2104-2	ITL	46 - 66
C2104-4	ITL	47 - 47
C2104A	ITL	47 -107
C2104A-1	ITL	45 - 49
C2104A-2	ITL	45 -101
C2104A-3	ITL	46 - 67
C2104A-4	ITL	47 - 48
C2105	ITL	32 - 92
C2105-1	ITL	32 - 85
C2105-2	ITL	32 - 87
C2107A1	ITL	47 - 31
C2107A4	ITL	47 -108
C2107A5	ITL	48 - 19
C2107A8	ITL	48 - 20
C2107A	ITL	47 - 49
C2107B4	ITL	47 - 18
C2107B6	ITL	47 -109
C2107B	ITL	45 -102
C2108-2	ITL	52 - 86
C2108-4	ITL	52 - 92
C2109-3	ITL	52 - 87
C2109-4	ITL	52 - 91
C2111	AMD	31 - 4
	ITL	
C2111-2	AMD	30 - 68
	ITL	
C2111A	ITL	29 - 92
C2111A-2	ITL	29 - 68
C2111A-4	ITL	30 - 6
C2112	AMD	31 - 5
	ITL	
C2112-2	AMD	30 - 69
	ITL	
C2112A	ITL	29 - 93
C2112A-2	ITL	29 - 69
C2112A-4	ITL	30 - 7
C2114	ITL	41 - 77
C2114-2	ITL	40 - 53
C2114-3	ITL	41 - 26
C2114L3	ITL	41 - 27
C2114L	ITL	41 - 78
C2115	ITL	37 - 32
C2115-2	ITL	36 -107
C2115A	ITL	36 - 82
C2115A-2	ITL	36 -108
C2115AL	ITL	36 - 83
C2115AL-2	ITL	36 -109
C2115L	ITL	37 - 33

TYPE No.	MFRS	Pg&Line
C2116	ITL	54 - 15
C2116-2	ITL	53 - 92
C2116-3	ITL	54 - 16
C2116-4	ITL	54 - 44
C2117-2	ITL	53 - 70
C2117-3	ITL	53 - 93
C2117-4	ITL	54 - 17
C2117-5	ITL	54 - 93
C2125	ITL	37 - 34
C2125-2	ITL	36 -110
C2125A	ITL	36 - 84
C2125A-2	ITL	37 - 1
C2125AL	ITL	36 - 85
C2125AL-2	ITL	37 - 2
C2125L	ITL	37 - 35
C2141-2	ITL	51 - 82
C2141-3	ITL	51 - 91
C2141-4	ITL	51 -108
C2141-5	ITL	52 - 15
C2141L-3	ITL	51 - 92
C2141L-4	ITL	51 -109
C2141L-5	ITL	52 - 16
C2142	ITL	41 - 79
C2142-2	ITL	40 - 54
C2142-3	ITL	41 - 28
C2142L	ITL	41 - 80
C2142L-2	ITL	40 - 55
C2142L-3	ITL	41 - 29
C2147	ITL	51 - 71
C2147-3	ITL	51 - 65
C2147L	ITL	51 - 72
C2164-15	ITL	56 - 24
C2164-20	ITL	56 - 55
C2164-25	ITL	56 - 47
C2167-10	ITL	55 - 53
C2167-55	ITL	55 - 28
C2167-70	ITL	55 - 37
C2167L-70	ITL	55 - 38
C2308	ITL	74 - 43
C2316A	ITL	79 - 36
C2316E	ITL	79 - 49
C2405	ITL	107 - 15
C2416	ITL	105 -108
C2464	ITL	108 - 29
C2608	ITL	73 - 32
C2704	ITL	70 -104
C2708	AMD	76 - 7
	ITL	
C2708-1	ITL	75 -105
C2708L	ITL	76 - 8
C2716	ITL	80 - 82
C2732	ITL	82 - 51
C2758	ITL	76 - 9
C3102	ITL	25 - 48
C3102A	ITL	24 -104
C3104	ITL	109 - 9
C3106	ITL	25 - 49
C3106-8	ITL	25 - 50
C3106A	ITL	25 - 16
C3107	ITL	25 - 51
C3107-8	ITL	25 - 52
C3107A	ITL	25 - 17
C3301	ITL	60 - 5
C3301A	ITL	59 - 90
C3302	ITL	65 - 70
C3302-4	ITL	65 - 76
C3302-6	ITL	65 - 77
C3304#1	ITL	68 - 44
C3304#2	ITL	71 - 62
C3304A4	ITL	68 - 26
C3304A6	ITL	68 - 27
C3304A	ITL	68 - 24
C3322	ITL	65 - 71
C3322-4	ITL	65 - 78
C3322-6	ITL	65 - 79
C3324A4	ITL	68 - 61
C3324A	ITL	68 - 49
C3601	ITL	61 - 58
C3605A	ITL	72 -110
C3605A-1	ITL	72 -106
C3625A	ITL	73 - 1
C3625A-1	ITL	72 -107
C5101	ITL	28 - 68
C5101-1	ITL	28 - 42
C5101-3	ITL	28 - 69
C5101-8	ITL	28 -102
C5101L3	ITL	28 - 70
C5101L	ITL	28 - 71
C5101L-1	ITL	28 - 43
C5101L-3	ITL	28 - 72
CD2155D	♦RCA	20 - 68
CD4005	♦RCA	20 - 65
CD4005D	♦RCA	21 - 5
CD4006	RCA	95 - 62
CD4006AY	RCA	95 - 63
CD4006AY#	RCA	95 - 65
CD4006BK	RCA	95 - 82
CD4006CJ	♦NSC	95 - 77
CD4006CN	♦NSC	95 - 78
CD4006D	RCA	95 - 64
CD4006MD	♦NSC	95 - 79
CD4006MF	♦NSC	95 - 80
CD4006MJ	♦NSC	95 - 81
CD4014AY	♦RCA	97 - 70
CD4014BK	♦RCA	98 - 28
CD4014CJ	♦NSC	97 -103
CD4014CN	NSC	97 -104
CD4014D	RCA	97 -105
CD4014MD	NSC	97 -106
CD4014MF	NSC	97 -107
CD4014MJ	♦NSC	97 -108
CD4015AY	RCA	94 - 84
CD4015BK	RCA	95 - 3
CD4015CJ	♦NSC	94 -107

TYPE No.	MFRS	Pg&Line
CD4015CN	♦NSC	94 -108
CD4015D	RCA	94 -104
CD4015MD	♦NSC	94 -109
CD4015MF	♦NSC	94 -110
CD4015MJ	♦NSC	95 - 1
CD4021BK	RCA	98 - 29
CD4021CJ	♦NSC	97 -109
CD4021CN	♦NSC	97 -110
CD4021D	RCA	97 - 71
CD4021MD	♦NSC	98 - 1
CD4021MF	♦NSC	98 - 2
CD4021MJ	♦NSC	98 - 3
CD4031AY	RCA	102 - 30
CD4031BCJ	♦NSC	102 - 37
CD4031BCN	♦NSC	102 - 38
CD4031BK	RCA	102 - 52
CD4031BMJ	♦NSC	102 - 39
CD4031BMW	♦NSC	102 - 40
CD4034AK	RCA	96 - 68
CD4034BCJ	♦NSC	96 - 77
CD4034BCN	♦NSC	96 - 78
CD4034BK	RCA	96 - 76
CD4034BMJ	♦NSC	96 - 79
CD4034BMW	♦NSC	96 - 80
CD4035BCJ	♦NSC	90 -110
CD4035BCN	♦NSC	91 - 1
CD4035BK	RCA	92 - 20
CD4035BMJ	♦NSC	91 - 2
CD4035BMW	♦NSC	91 - 3
CD4035CJ	♦NSC	91 - 4
CD4035CN	♦NSC	91 - 5
CD4035MD	♦NSC	91 - 6
CD4035MF	♦NSC	91 - 7
CD4035MJ	♦NSC	91 - 8
CD4042AD	RCA	90 - 50
CD4042AE	RCA	90 - 51
CD4042AF	RCA	90 - 52
CD4042AH	RCA	90 - 53
CD4042AK	RCA	90 - 54
CD4042AY	RCA	90 - 55
CD4058AD	♦RCA	96 - 69
CD4058AK	♦RCA	96 - 70
CD4061AD-PR	RCA	26 - 66
CD4062AK-PR	RCA	105 - 2
CD4062AT-PR	RCA	105 - 3
CD4076AD	RCA	90 - 11
CD4076AE	RCA	90 - 12
CD4076AF	RCA	90 - 13
CD4076AH	RCA	90 - 14
CD4076AK	RCA	90 - 15
CD4076AY	RCA	90 - 16
CD4076BCJ	NSC	91 - 44
CD4076BCN	NSC	91 - 45
CD4076BK	RCA	90 - 17
CD4076BMJ	NSC	91 - 46
CD4076BMW	NSC	91 - 47
CD4076BY	RCA	90 - 18
CD4094BY	♦RCA	98 - 73
CD40024D	RCA	22 - 97
CD40032D	RCA	68 - 35
CD40032E	RCA	68 - 36
CD40100BK	RCA	101 - 8
CD40104BD	RCA	91 - 48
CD40104BE	RCA	91 - 49
CD40104BF	RCA	91 - 50
CD40104BH	RCA	91 - 51
CD40104BK	RCA	91 - 52
CD40105AD	RCA	95 - 5
CD40105AE	RCA	95 - 6
CD40105AF	RCA	95 - 7
CD40105AH	RCA	95 - 8
CD40105AK	RCA	95 - 9
CD40105AY	RCA	95 - 10
CD40105BK	RCA	100 - 80
CD40105BY	RCA	100 - 81
CD40108BK	RCA	20 - 58
CD40174BCJ	NSC	95 -110
CD40174BCN	NSC	96 - 1
CD40174BD	RCA	96 - 8
CD40174BE	RCA	96 - 9
CD40174BF	RCA	96 - 10
CD40174BK	RCA	96 - 11
CD40174BMJ	NSC	96 - 2
CD40174BMW	NSC	96 - 3
CD40175BCJ	NSC	91 - 28
CD40175BCN	NSC	91 - 29
CD40175BMJ	NSC	91 - 30
CD40175BMW	NSC	91 - 31
CD40194BD	RCA	91 - 87
CD40194BE	RCA	91 - 88
CD40194BF	RCA	91 - 89
CD40194BH	RCA	91 - 90
CD40194BK	RCA	91 - 91
CDP18U42CD	♦RCA	62 - 88
CDP1821SCD	♦RCA	36 - 23
CDP1821SD	♦RCA	36 - 24
CDP1822DL1	RCA	29 - 27
CDP1822DL3	RCA	29 - 28
CDP1822DL8	RCA	29 - 29
CDP1822SCD	RCA	27 - 64
CDP1822SD	RCA	27 - 63
CDP1825CD	♦RCA	39 - 97
CDP1825CE	♦RCA	39 - 98
CDP1825CH	♦RCA	39 - 99
CDP1825D	♦RCA	39 -100
CDP1825E	♦RCA	39 -101
CDP1842CD	♦RCA	62 - 89
CM1101	♦AMS	27 - 54
CM1101A1	♦AMS	27 - 53
CM1101A	♦AMS	27 - 55
CM1103	♦AMS	33 - 43
CM1402	♦AMS	105 - 85
CM1402A	♦AMS	105 - 86
CM1403	♦AMS	106 - 81

TYPE No.	MFRS	Pg&Line
CM1403A	♦AMS	106 - 82
CM1404	♦AMS	107 - 55
CM1404A	♦AMS	107 - 56
CM1600-1C	♦STX	78 - 93
CM1600-1P	♦STX	78 - 94
CM1600-3C	♦STX	78 - 46
CM1600-3P	♦STX	78 - 47
CM1801	♦AMS	43 - 97
CM1805	♦AMS	23 - 59
CM1808#1	♦AMS	23 - 57
CM1808#2	♦AMS	23 - 58
CM2100	♦AMS	21 - 9
CM2102A4	ITL	37 - 89
CM2102A6	ITL	38 - 37
CM2106	♦AMS	22 - 70
CM2106M	♦AMS	22 - 71
CM2150	♦AMS	26 - 53
CM2400	♦AMS	39 - 47
CM2401	AMS	44 - 9
CM2402	AMS	48 -102
CM2403	AMS	34 -106
CM2404	AMS	39 - 28
CM2405	AMS	43 -108
CM2800CPGXXXX		58 -107
	♦AMS	
CM2800MPGXXXX		58 -108
	♦AMS	
CM2850CDE0011%		88 - 18
	♦AMS	
CM2850CDE0012%		88 -106
	♦AMS	
CM2850CDE0013%		88 -107
	♦AMS	
CM2850CDE0014%		87 - 94
	♦AMS	
CM2850CDE0015%		87 - 95
	♦AMS	
CM2850CDE0017%		87 - 28
	♦AMS	
CM2850CDE0018%		87 - 29
	♦AMS	
CM2850CDE0019%		88 - 19
	♦AMS	
CM2850CDE0049%		88 - 21
	♦AMS	
CM2850CDE0050%		88 - 22
	♦AMS	
CM2850CDE0051%		88 -109
	♦AMS	
CM2850CDE0052%		88 -110
	♦AMS	
CM2850CDEXXXX		60 - 26
	♦AMS	
CM2850CPEXXXX		60 - 27
	♦AMS	
CM2850MDEXXXX		60 - 28
	♦AMS	
CM2850MPEXXXX		60 - 29
	♦AMS	
CM2900-01%	♦AMS	84 - 78
CM2900-02%	♦AMS	84 - 79
CM2901CDE0005		84 - 80
	♦AMS	
CM2901CDE0008		84 - 81
	♦AMS	
CM3200-2D	♦STX	82 - 32
CM3200-3D	♦STX	82 - 34
CM3200-C	♦STX	82 - 29
CM3200-D	♦STX	82 - 30
CM3200-P	♦STX	82 - 31
CM3200C	♦STX	81 - 80
CM3200P	♦STX	81 - 81
CM3301A	ITL	59 -109
CM4006	SOD	95 - 61
CM4014	SOD	99 -110
CM4015	SOD	94 - 80
CM4021	SOD	97 - 72
CM4500-01	AMS	107 - 11
CRC1001-3-1	CRC	102 - 63
CRC1501-1-2	♦CRC	107 - 17
CRC1501-2-2	♦CRC	107 - 18
CRC1502-1-2	♦CRC	101 - 38
CRC1502-2-2	♦CRC	101 - 39
CRC1503-1-2	♦CRC	101 - 40
CRC1503-2-2	♦CRC	101 - 41
CRC1504-1-2	♦CRC	100 - 76
CRC1504-2-2	♦CRC	100 - 77
CRC1505-1-3	♦CRC	102 -106
CRC1505-2-3	♦CRC	102 -107
CRC1505-3-3	♦CRC	102 -108
CRC3001-1-3	♦CRC	59 - 6
CRC3001-2-3	♦CRC	59 - 7
CRC3002-1-3#1		66 - 36
	♦CRC	
CRC3002-1-3#2		63 - 35
	♦CRC	
CRC3002-1-3XXX#1		63 - 36
	♦CRC	
CRC3002-1-3XXX#2		66 - 37
	♦CRC	
CRC3002-2-3#1		66 - 38
	♦CRC	
CRC3002-2-3#2		63 - 37
	♦CRC	
CRC3002-2-3XXX#1		63 - 38
	♦CRC	
CRC3002-2-3XXX#2		66 - 39
	♦CRC	
CRC3003-1-3	♦CRC	109 - 95
CRC3003-2-3	♦CRC	109 - 96
CRC3004-1-3	♦CRC	109 - 28
CRC3004-2-3	♦CRC	109 - 29
CRC3501-1-2XXX#1		65 - 20
	♦CRC	

TYPE No.	MFRS	Pg&Line
CRC3501-1-2XXX#2		67 -107
	♦CRC	
CRC3501-2-2XXX#1		65 - 21
	♦CRC	
CRC3501-2-2XXX#2		67 -108
	♦CRC	
CRC3502-1-2	♦CRC	87 - 26
CRC3502-2-2	♦CRC	87 - 27
CRC3503-1-2	♦CRC	88 - 4
CRC3503-2-2	♦CRC	88 - 5
CRC3504-1-2	♦CRC	84 - 94
CRC3504-2-2	♦CRC	84 - 95
CRC3505-1-2	♦CRC	84 - 96
CRC3505-2-2	♦CRC	84 - 97
CRC4001-1-3	♦CRC	22 - 85
CRC4001-2-3	♦CRC	22 - 86
CRC4002-1-2	♦CRC	23 - 22
CRC4002-2-2	♦CRC	23 - 23
CRC4003-1-2	♦CRC	23 - 61
CRC4003-2-2	♦CRC	23 - 62
D1103	ITL	33 - 44
D1103-1	ITL	33 - 18
D1103A1	ITL	33 - 9
D1103A2	ITL	33 - 10
D1103A	ITL	33 - 31
D2101	ITL	31 - 6
D2101-1	ITL	30 - 53
D2101-2	ITL	30 - 70
D2101A	ITL	29 - 94
D2101A-2	ITL	29 - 70
D2101A-4	ITL	30 - 8
D2102A2	ITL	37 - 56
D2102A4	ITL	37 - 90
D2102A6	ITL	38 - 38
D2102A	ITL	37 - 72
D2104	ITL	47 -110
D2104-2	ITL	46 - 68
D2104-4	ITL	47 - 50
D2104A	ITL	48 - 1
D2104A-1	ITL	45 - 50
D2104A-2	ITL	45 -103
D2104A-3	ITL	46 - 69
D2104A-4	ITL	47 - 51
D2107C	ITL	46 - 70
D2107C-1	ITL	45 - 51
D2107C-2	ITL	45 -104
D2107C-4	ITL	47 - 52
D2108-2	ITL	52 - 88
D2108-4	ITL	52 - 93
D2111	ITL	31 - 7
D2111-1	ITL	30 - 54
D2111-2	ITL	30 - 71
D2111A2	ITL	29 - 71
D2111A4	ITL	30 - 9
D2111A	ITL	29 - 95
D2111A-2	ITL	29 - 72
D2111A-4	ITL	30 - 10
D2112	ITL	31 - 8
D2112-2	ITL	30 - 72
D2112A2	ITL	28 - 31
D2112A4	ITL	28 - 44
D2112A	ITL	29 - 96
D2112A-2	ITL	29 - 73
D2112A-4	ITL	30 - 11
D2115	ITL	37 - 36
D2115-2	ITL	37 - 3
D2115L	ITL	37 - 37
D2117-2	ITL	54 - 57
D2117-3	ITL	54 - 67
D2117-4	ITL	54 - 80
D2117-5	ITL	54 - 94
D2118-3	ITL	53 - 52
D2118-4	ITL	53 - 57
D2118-7	ITL	53 - 71
D2141-2	ITL	51 - 83
D2141-3	ITL	51 - 93
D2141-4	ITL	51 -110
D2141-5	ITL	52 - 17
D2141L-3	ITL	51 - 94
D2141L-4	ITL	52 - 1
D2141L-5	ITL	52 - 18
D2308	ITL	74 - 41
D2316A	ITL	79 - 37
D2316E	ITL	79 - 50
D2332	ITL	82 - 10
D2364	ITL	83 - 20
D2464	ITL	108 - 30
D2608	ITL	73 - 33
D2708	ITL	76 - 10
D2708-1	ITL	75 -106
D2708-6	ITL	76 - 39
D2708L	ITL	76 - 11
D2732	ITL	82 - 36
D2732-6	ITL	82 - 37
D2758	ITL	74 - 62
D3101	ITL	21 - 94
D3101A	ITL	21 - 69
D3106	ITL	25 - 53
D3106-8	ITL	25 - 54
D3106A	ITL	25 - 18
D3107	ITL	25 - 55
D3107-8	ITL	25 - 56
D3107A	ITL	25 - 19
D3301A	ITL	59 - 91
D3302	ITL	65 - 72
D3302-4	ITL	65 - 80
D3302-6	ITL	65 - 81
D3302A4	ITL	66 - 17
D3302A	ITL	65 -105
D3302AL6	ITL	66 - 18
D3304A4	ITL	68 - 28
D3304A6	ITL	68 - 29
D3304A	ITL	68 - 25
D3322	ITL	65 - 73

♦-Mfr's data sheet available in microfilm service

Cur-In current D.A.T.A.BOOK
Δ-Registered with JEDEC by this manufacturer

Obs-In this book

1. TYPE No. CROSS INDEX

IN TYPE NUMBER SEQUENCE

MEMORY

TYPE No.	MFRS	Pg&Line
D3322-4	ITL	65 - 82
D3322-6	ITL	65 - 83
D3322A4	ITL	66 - 19
D3322A	ITL	65 -106
D3322AL6	ITL	66 - 20
D3324A4	ITL	68 - 62
D3324A	ITL	68 - 50
D3601	ITL	61 - 59
D3601-1	ITL	61 - 24
D3602	ITL	67 - 45
D3602-4	ITL	67 - 57
D3602-6	ITL	67 - 58
D3602A	ITL	67 - 46
D3602A-2	ITL	67 - 34
D3602L6	ITL	67 - 59
D3604	ITL	70 - 33
D3604-4	ITL	70 - 62
D3604-6	ITL	70 - 63
D3604A	ITL	70 - 34
D3604A-2	ITL	70 - 20
D3604AL	ITL	70 - 64
D3604L6	ITL	70 - 65
D3605	ITL	72 - 67
D3605-1	ITL	72 - 26
D3605-2	ITL	72 - 54
D3605A	ITL	73 - 2
D3605A-1	ITL	72 -108
D3608	ITL	75 - 33
D3608-4	ITL	75 - 56
D3621	ITL	61 - 60
D3621-1	ITL	61 - 25
D3622	ITL	67 - 47
D3622-4	ITL	67 - 60
D3622-6	ITL	67 - 61
D3622A	ITL	67 - 48
D3622A-2	ITL	67 - 35
D3624	ITL	70 - 35
D3624-4	ITL	70 - 66
D3624A	ITL	70 - 36
D3624A-2	ITL	70 - 21
D3625	ITL	72 - 68
D3625-1	ITL	72 - 27
D3625-2	ITL	72 - 55
D3625A	ITL	73 - 3
D3625A-1	ITL	72 -109
D3628	ITL	75 - 34
D3628-4	ITL	75 - 57
D3636	ITL	80 - 47
D3636-1	ITL	80 - 32
D4016	EEC	94 - 68
D4039	EEC	99 - 92
D4208	EEC	100 - 36
D4218	EEC	20 - 59
D5104-10	ITL	49 - 16
D5104-15	ITL	49 - 18
D5104-20	ITL	49 - 20
DL1-2080	♦GIC	103 - 11
DL1-3066	GIC	102 -109
DL5-1200	♦GIC	104 -105
DL5-1512	♦GIC	106 - 18
DL7-1200	♦GIC	104 -106
DL7-1512	GIC	106 - 19
DL7-2256	♦GIC	105 - 36
DL9-1024-21#1	♦GIC	107 - 48
DL9-1024-21#2	♦GIC	107 - 78
DL9-1024-23#1	♦GIC	107 - 24
DL9-1024-23#2	♦GIC	107 - 49
DL9-1024-28#1	♦GIC	107 - 25
DL9-1024-28#2	♦GIC	107 - 50
DL9-1024-69#1	♦GIC	107 - 26
DL9-1024-69#2	♦GIC	107 - 51
DL9-1402A26#1	GIC	105 - 87
DL9-1402A26#2	GIC	105 - 77
DL9-1402A55#1	GIC	105 - 88
DL9-1402A55#2	GIC	105 - 78
DL9-1403A15#1	GIC	106 - 83
DL9-1403A15#2	GIC	106 - 72
DL9-1403A26#1	GIC	106 - 84
DL9-1403A26#2	GIC	106 - 73
DL9-1403A55#1	GIC	106 - 85
DL9-1403A55#2	GIC	106 - 74
DL9-1404A15#1	GIC	107 - 57
DL9-1404A15#2	GIC	107 - 36
DL9-1404A26#1	GIC	107 - 58
DL9-1404A26#2	GIC	107 - 37
DL9-1404A55#1	GIC	107 - 59
DL9-1404A55#2	GIC	107 - 38
DL9-2512-21#1	♦GIC	106 - 76
DL9-2512-21#2	♦GIC	106 -105
DL9-2512-23#1	♦GIC	106 - 61
DL9-2512-23#2	♦GIC	106 - 77
DL9-2512-28#1	♦GIC	106 - 62
DL9-2512-28#2	♦GIC	106 - 78
DL9-2512-69#1	♦GIC	106 - 63
DL9-2512-69#2	♦GIC	106 - 79
DL9-4256-28#1	♦GIC	105 - 72

TYPE No.	MFRS	Pg&Line
DL9-4256-28#2	♦GIC	105 - 80
DL9-4256-69#1	♦GIC	105 - 73
DL9-4256-69#2	♦GIC	105 - 81
DL9-4256-71#1	♦GIC	105 - 82
DL9-4256-71#2	♦GIC	105 -101
DM54L89AN	NSC	22 - 11
DM54L91F	NSC	99 - 36
DM54L91N	NSC	99 - 37
DM54L95F	♦NSC	91 -100
DM54L95N	♦NSC	91 -101
DM54L98N	♦NSC	91 - 84
DM54L164AN	NSC	98 - 89
DM54L165AF	NSC	98 - 21
DM54L165AN	NSC	98 - 22
DM54L187AF	NSC	60 - 45
DM54L187AJ	NSC	60 - 46
DM54L187AN	NSC	60 - 47
DM54L187AW	NSC	60 - 48
DM54LS95BJ	NSC	93 - 89
DM54LS95BN	NSC	93 - 90
DM54LS95BW	NSC	93 - 91
DM54LS96J	NSC	95 - 14
DM54LS96N	NSC	95 - 15
DM54LS96W	NSC	95 - 16
DM54LS164N	♦NSC	99 - 4
DM54LS170N	♦NSC	20 - 17
DM54LS189J	♦NSC	21 -107
DM54LS189W	♦NSC	21 -108
DM54LS194AN	NSC	92 - 57
DM54LS195AN	NSC	93 - 18
DM54LS289J	NSC	22 - 1
DM54LS289W	NSC	22 - 2
DM54LS295AJ	NSC	92 - 25
DM54LS295AN	NSC	92 - 26
DM54LS295AW	NSC	92 - 27
DM54S187J	♦NSC	59 - 70
DM54S200J	♦NSC	25 - 39
DM54S200W	♦NSC	25 - 40
DM54S206J	♦NSC	25 - 57
DM54S206N	♦NSC	25 - 58
DM54S206W	♦NSC	25 - 59
DM54S270J	♦NSC	65 -107
DM54S271J	♦NSC	62 -110
DM54S271N	♦NSC	62 - 91
DM54S287D	♦NSC	61 - 8
DM54S370J	♦NSC	65 -108
DM54S371J	♦NSC	63 - 1
DM54S371N	♦NSC	62 - 92
DM54S387D	NSC	61 - 9
DM54S470J	♦NSC	64 - 58
DM54S470N	♦NSC	64 - 13
DM54S471J	♦NSC	64 - 59
DM54S471N	♦NSC	64 - 14
DM54S570D	NSC	66 -100
DM54S571D	NSC	66 -101
DM72S04J	NSC	62 - 93
DM72S114D	NSC	64 - 15
DM74L89AJ	NSC	22 - 12
DM74L89AW	NSC	21 - 6
DM74L91F	NSC	99 - 38
DM74L91J	NSC	99 - 39
DM74L95F	NSC	91 -102
DM74L95J	NSC	91 -103
DM74L98J	NSC	91 - 85
DM74L98W	NSC	91 - 86
DM74L164AJ	NSC	98 - 90
DM74L164AW	NSC	98 - 91
DM74L165AF	NSC	98 - 23
DM74L165AJ	NSC	98 - 24
DM74L187AF	NSC	60 - 49
DM74L187AJ	NSC	60 - 50
DM74L187AN	NSC	60 - 51
DM74L187AW	NSC	60 - 52
DM74LS95BJ	NSC	93 - 92
DM74LS95BN	NSC	93 - 93
DM74LS95BW	NSC	93 - 94
DM74LS96J	NSC	95 - 17
DM74LS96N	NSC	95 - 18
DM74LS96W	NSC	95 - 19
DM74LS164J	NSC	99 - 5
DM74LS164W	NSC	99 - 6
DM74LS170J	NSC	20 - 18
DM74LS170W	NSC	20 - 19
DM74LS189J	♦NSC	21 -103
DM74LS189N	♦NSC	21 -104
DM74LS194AJ	NSC	92 - 58
DM74LS194AW	NSC	92 - 59
DM74LS195AJ	NSC	93 - 19
DM74LS195AW	NSC	93 - 20
DM74LS289J	NSC	21 -105
DM74LS289N	NSC	21 -106
DM74LS295AJ	NSC	92 - 28
DM74LS295AN	NSC	92 - 29
DM74LS295AW	NSC	92 - 30
DM74S187J	♦NSC	59 - 71
DM74S187N	♦NSC	59 - 72
DM74S200J	♦NSC	24 -105
DM74S200N	♦NSC	24 -106
DM74S200W	♦NSC	24 -107
DM74S206J	♦NSC	25 - 20
DM74S206N	♦NSC	25 - 21
DM74S206W	♦NSC	25 - 22
DM74S270J	♦NSC	65 - 93
DM74S270N	♦NSC	65 - 94
DM74S271J	♦NSC	62 -100
DM74S271N	♦NSC	62 - 94
DM74S289W	♦NSC	21 - 70
DM74S370J	♦NSC	65 - 95
DM74S370N	♦NSC	65 - 96

TYPE No.	MFRS	Pg&Line
DM74S371J	♦NSC	62 -101
DM74S371N	♦NSC	62 - 95
DM74S470J	♦NSC	64 - 32
DM74S470N	♦NSC	64 - 16
DM74S471J	♦NSC	64 - 33
DM74S471N	♦NSC	64 - 17
DM74S570D	NSC	66 -102
DM74S571D	NSC	66 -103
DM75L51F	♦NSC	91 -106
DM75L51N	♦NSC	91 - 25
DM75S28J	♦NSC	73 - 64
DM75S29J	♦NSC	73 - 65
DM75S68D	NSC	21 - 84
DM75S97J	♦NSC	59 - 73
DM75S202N	NSC	62 - 96
DM75S222N	NSC	64 - 18
DM76L13F	NSC	90 -104
DM76L13J	NSC	90 -105
DM76L13N	NSC	90 -106
DM76L70F	NSC	98 - 81
DM76L70J	NSC	98 - 82
DM76L70N	NSC	98 - 83
DM76L90N	♦NSC	98 - 25
DM76L97F	NSC	60 - 41
DM76L97N	NSC	60 - 55
DM76L99N	NSC	22 - 60
DM77S186J	♦NSC	78 - 23
DM77S187J	♦NSC	78 - 24
DM77S201J	♦NSC	63 - 2
DM77S202J	♦NSC	63 - 3
DM77S221J	♦NSC	64 - 60
DM77S222J	♦NSC	64 - 61
DM77S228J	♦NSC	75 - 54
DM77S229J	♦NSC	75 - 55
DM77S295J	♦NSC	70 - 44
DM77S296J	♦NSC	70 - 45
DM78L70F	NSC	98 - 84
DM82S04J	NSC	62 - 97
DM82S04N	NSC	62 - 98
DM82S114D	NSC	64 - 19
DM82S114N	NSC	64 - 20
DM85L51F	NSC	91 -107
DM85L51J	NSC	91 - 26
DM85L51W	NSC	91 - 27
DM85S28J	♦NSC	73 - 48
DM85S28N	♦NSC	73 - 49
DM85S29J	♦NSC	73 - 50
DM85S29N	♦NSC	73 - 51
DM85S50J	NSC	96 - 48
DM85S50N	NSC	96 - 49
DM85S50W	NSC	96 - 50
DM85S97J	♦NSC	59 - 74
DM85S97N	♦NSC	59 - 75
DM85S202N	NSC	62 - 99
DM85S222N	NSC	64 - 21
DM86L13F	NSC	90 -107
DM86L13J	NSC	90 -108
DM86L13N	NSC	90 -109
DM86L70F	NSC	98 - 85
DM86L70J	NSC	98 - 86
DM86L70N	NSC	98 - 87
DM86L70W	NSC	98 - 74
DM86L90J	NSC	98 - 26
DM86L90W	NSC	98 - 27
DM86L97F	NSC	60 - 42
DM86L97J	NSC	60 - 56
DM86L97W	NSC	60 - 57
DM86L99J	NSC	22 - 61
DM86L99W	NSC	22 - 62
DM86S21J	NSC	22 - 95
DM86S21N	NSC	22 - 96
DM87S186J	♦NSC	78 - 19
DM87S186N	♦NSC	78 - 20
DM87S187J	♦NSC	78 - 21
DM87S187N	♦NSC	78 - 22
DM87S201J	♦NSC	62 -102
DM87S201N	♦NSC	62 -103
DM87S202J	♦NSC	62 -104
DM87S202N	♦NSC	62 -105
DM87S221J	♦NSC	64 - 34
DM87S221N	♦NSC	64 - 35
DM87S222J	♦NSC	64 - 36
DM87S222N	♦NSC	64 - 37
DM87S228J	♦NSC	75 - 28
DM87S228N	♦NSC	75 - 29
DM87S229J	♦NSC	75 - 30
DM87S229N	♦NSC	75 - 31
DM87S295J	♦NSC	70 - 24
DM87S295N	♦NSC	70 - 25
DM87S296J	♦NSC	70 - 26
DM87S296N	♦NSC	70 - 27
DM88L70F	NSC	98 - 88
DM3301A	ITL	59 -110
DM3601	ITL	61 - 67
DM5488J	♦NSC	57 - 42
DM5488N	♦NSC	57 - 36
DM5488W	♦NSC	57 - 37
DM5489J	♦NSC	22 - 63
DM5491AJ	♦NSC	99 - 76
DM5491AN	♦NSC	99 - 77
DM5491AW	♦NSC	99 - 78
DM5495N	♦NSC	93 - 95
DM7488J	♦NSC	57 - 43
DM7488N	♦NSC	57 - 44
DM7488W	♦NSC	57 - 38
DM7489J	♦NSC	22 - 29
DM7489N	♦NSC	22 - 30
DM7491AJ	NSC	99 - 79
DM7491AN	NSC	99 - 80
DM7491AW	NSC	99 - 81
DM7495J	♦NSC	93 - 96
DM7542N	♦NSC	93 -103
DM7570D	♦NSC	98 - 97
DM7573D	♦NSC	61 - 92

TYPE No.	MFRS	Pg&Line
DM7573J	♦NSC	62 - 24
DM7574D	♦NSC	59 - 59
DM7574J	♦NSC	59 - 60
DM7575J	♦NSC	109 - 64
DM7576J	♦NSC	109 - 65
DM7577D	♦NSC	58 - 21
DM7577J	♦NSC	58 - 3
DM7577N	♦NSC	58 - 4
DM7578D	♦NSC	58 - 22
DM7578J	♦NSC	58 - 5
DM7578N	♦NSC	58 - 6
DM7590D	♦NSC	98 - 30
DM7595D	♦NSC	68 - 79
DM7595J	♦NSC	68 - 80
DM7596D	♦NSC	68 - 81
DM7596J	♦NSC	68 - 82
DM7597D	♦NSC	59 - 58
DM7597J	♦NSC	60 - 34
DM7597N	♦NSC	60 - 7
DM7598J	♦NSC	57 - 72
DM7598N	♦NSC	57 - 41
DM7600D	♦NSC	91 -108
DM7613J	♦NSC	93 - 29
DM7613N	♦NSC	93 - 30
DM7613W	♦NSC	93 - 31
DM7678J	♦NSC	85 - 13
DM7679J	♦NSC	85 - 14
DM7696D	♦NSC	68 - 39
DM7795J	NSC	68 - 83
DM7796J	NSC	68 - 84
DM8300J	♦NSC	93 - 32
DM8300W	♦NSC	93 - 33
DM8531D	♦NSC	78 - 79
DM8531J	♦NSC	78 - 80
DM8531N	♦NSC	78 - 81
DM8542J	NSC	93 -104
DM8542W	NSC	93 -105
DM8546J	NSC	96 - 81
DM8546W	NSC	96 - 82
DM8551J	NSC	92 - 60
DM8551W	♦NSC	92 - 61
DM8570J	♦NSC	98 -103
DM8570W	♦NSC	98 -104
DM8573D	♦NSC	61 - 93
DM8573J	♦NSC	62 - 25
DM8573N	♦NSC	62 - 26
DM8574D	♦NSC	59 - 61
DM8574J	♦NSC	59 - 62
DM8574N	♦NSC	62 - 30
DM8575J	♦NSC	109 - 66
DM8575N	♦NSC	109 - 67
DM8576J	♦NSC	109 - 68
DM8576N	♦NSC	109 - 69
DM8577D	♦NSC	58 - 23
DM8577J	♦NSC	58 - 7
DM8577N	♦NSC	58 - 8
DM8578D	♦NSC	58 - 24
DM8578J	♦NSC	58 - 9
DM8578N	♦NSC	58 - 10
DM8581D	NSC	76 -104
DM8581N	NSC	77 - 1
DM8582D	NSC	25 -101
DM8582N	NSC	25 -102
DM8590J	♦NSC	98 - 31
DM8590W	♦NSC	98 - 32
DM8595D	♦NSC	68 - 85
DM8595J	♦NSC	68 - 86
DM8595N	♦NSC	68 - 87
DM8596D	♦NSC	68 - 88
DM8596J	♦NSC	68 - 89
DM8596N	♦NSC	68 - 90
DM8597J	♦NSC	60 - 35
DM8597N	♦NSC	60 - 36
DM8598J	♦NSC	57 - 61
DM8598N	♦NSC	57 - 62
DM8599J	♦NSC	22 - 13
DM8599N	♦NSC	22 - 14
DM8600D	♦NSC	91 -109
DM8600N	♦NSC	91 -110
DM8613J	NSC	93 - 34
DM8613N	NSC	93 - 35
DM8613W	NSC	93 - 36
DM8679J	♦NSC	85 - 15
DM8679N	♦NSC	85 - 16
DM8696D	♦NSC	68 - 40
DM8696N	♦NSC	68 - 41
DM8795J	NSC	68 - 91
DM8795N	NSC	68 - 92
DM8796J	NSC	68 - 93
DM8796N	NSC	68 - 94
DM9300N	♦NSC	93 - 37
DM54174J	♦NSC	96 - 28
DM54174N	♦NSC	96 - 29
DM54174W	♦NSC	96 - 30
DM54175J	♦NSC	93 -106
DM54175N	♦NSC	93 -107
DM54175W	♦NSC	93 -108
DM54184AJ	NSC	88 - 58
DM54184AW	NSC	88 - 59
DM54184J	NSC	88 - 60
DM54184W	NSC	88 - 61
DM54187D	♦NSC	60 - 8
DM54187J	NSC	60 - 9
DM54198F	NSC	97 - 33
DM54198N	♦NSC	97 - 34
DM54199F	♦NSC	97 - 35
DM54199N	♦NSC	97 - 36
DM74164J	NSC	98 -105
DM74165J	NSC	98 - 33
DM74165W	NSC	98 - 34
DM74166J	NSC	98 - 60
DM74166W	NSC	98 - 61
DM74170J	NSC	20 - 29
DM74174J	NSC	96 - 31

TYPE No.	MFRS	Pg&Line
DM74174N	NSC	96 - 32
DM74174W	NSC	96 - 33
DM74175J	NSC	93 -109
DM74175N	NSC	93 -110
DM74175W	NSC	94 - 1
DM74184AJ	NSC	88 - 62
DM74184AN	NSC	88 - 63
DM74184AW	NSC	88 - 64
DM74184J	NSC	88 - 65
DM74184N	NSC	88 - 66
DM74184W	NSC	88 - 67
DM74187J	♦NSC	60 - 10
DM74187N	♦NSC	60 - 11
DM74194J	NSC	93 - 97
DM74194W	NSC	93 - 98
DM74195J	NSC	93 - 38
DM74195W	NSC	93 - 39
DM74198F	NSC	97 - 37
DM74198J	NSC	97 - 38
DM74199F	NSC	97 - 39
DM74199J	NSC	97 - 40
DM74200D	NSC	25 - 82
DM74200N	NSC	25 - 83
DM93415AJ	♦NSC	34 - 59
DM93415J	♦NSC	34 - 68
DM93425AJ	♦NSC	34 - 60
DM93425J	♦NSC	34 - 69
EA1003	♦EAI	101 - 19
EA1004	♦EAI	104 - 21
EA1005	♦EAI	104 - 8
EA1007	♦EAI	101 - 20
EA1008	♦EAI	103 - 22
EA1009	♦EAI	103 - 16
EA1012	EAI	102 - 6
EA1013	EAI	102 - 1
EA1200	♦EAI	101 - 44
EA1201	♦EAI	101 - 42
EA1202	♦EAI	102 - 22
EA1203	♦EAI	102 - 17
EA1204	♦EAI	105 - 29
EA1204D	♦EAI	105 - 30
EA1205	♦EAI	105 - 19
EA1205D	♦EAI	105 - 20
EA1206	♦EAI	106 - 37
EA1208	♦EAI	100 - 78
EA1210	♦EAI	105 - 48
EA1212	♦EAI	106 - 32
EA1221	♦EAI	104 -107
EA1221D	♦EAI	104 -108
EA1500	♦EAI	32 - 88
EA1500-1	♦EAI	32 - 98
EA1500A1#1	♦EAI	32 - 94
EA1500A1#2	♦EAI	32 - 95
EA1500A#1	♦EAI	32 - 83
EA1500A#2	♦EAI	32 - 84
EA1501	EAI	32 - 99
EA1502	♦EAI	32 -102
EA2000CD	♦EAI	89 - 17
EA2000CP	♦EAI	89 - 18
EA2007ADC#1	♦EAI	89 - 4
EA2007ADC#2	♦EAI	89 - 6
EA2007APC#1	♦EAI	89 - 5
EA2007APC#2	♦EAI	89 - 7
EA2030DC	♦EAI	89 - 19
EA2030PC	♦EAI	89 - 20
EA2308AC	♦EAI	74 - 18
EA2308AL	♦EAI	74 - 58
EA2308AP	♦EAI	74 - 19
EA2316ADC	EAI	79 - 67
EA2316ADM	EAI	79 - 68
EA2704	♦EAI	70 -105
EA2704DC	♦EAI	70 -106
EA2704DL	♦EAI	70 -108
EA2704DM	♦EAI	70 -109
EA2708	♦EAI	76 - 12
EA2708DC	♦EAI	76 - 13
EA2708DL	♦EAI	76 - 38
EA2708DM	♦EAI	76 - 40
EA2716	EAI	78 - 51
EA3001#1	♦EAI	84 - 11
EA3001#2	♦EAI	88 - 23
EA3100	♦EAI	65 - 24
EA3101#1	♦EAI	87 - 60
EA3101#2	♦EAI	88 - 37
EA3200	♦EAI	81 - 82
EA3200DC	♦EAI	82 - 16
EA3300#1	♦EAI	68 - 38
EA3300#2	♦EAI	71 - 46
EA3307#1	♦EAI	87 - 43
EA3307#2	♦EAI	88 - 8
EA3500	♦EAI	68 - 2
EA3501	♦EAI	84 - 6
EA3513	♦EAI	84 - 7
EA3701	♦EAI	84 - 1
EA3800#1	♦EAI	76 - 90
EA3800#2	♦EAI	76 - 91
EA3801	EAI	110 - 5
EA3815	EAI	76 - 87
EA4000	♦EAI	71 - 16
EA4001	♦EAI	84 - 55
EA4004	♦EAI	85 - 32
EA4015#1	♦EAI	87 - 44
EA4015#2	♦EAI	88 - 7
EA4016	♦EAI	86 - 33
EA4034#1	EAI	88 - 20
EA4034#2	EAI	88 -108
EA4035#1	EAI	87 - 81
EA4035#2	EAI	88 -100
EA4079	EAI	109 -100
EA4080	EAI	109 - 17
EA4122DC1	EAI	46 - 71
EA4122DC2	EAI	45 -105
EA4122DC	EAI	47 - 53
EA4122PC1	EAI	46 - 72

♦-Mfr's data sheet available in microfilm service

Cur-In current D.A.T.A.BOOK
Δ-Registered with JEDEC by this manufacturer

Obs-In this book

1. TYPE No. CROSS INDEX

IN TYPE NUMBER SEQUENCE

TYPE No.	MFRS	Pg&Line
EA4122PC2	EAI	45 -106
EA4122PC	EAI	47 - 54
EA4501	♦EAI	84 - 99
EA4501-1	♦EAI	84 -100
EA4501SJ1	♦EAI	84 -101
EA4501SJ	♦EAI	84 -102
EA4600C1#1	♦EAI	78 -101
EA4600C1#2	♦EAI	78 -102
EA4600C1#3	♦EAI	81 - 19
EA4600C1#4	♦EAI	81 - 20
EA4600C#1	♦EAI	78 - 97
EA4600C#2	♦EAI	78 - 98
EA4600C#3	♦EAI	81 - 15
EA4600C#4	♦EAI	81 - 16
EA4600M#1	♦EAI	78 - 99
EA4600M#2	♦EAI	78 -100
EA4600M#3	♦EAI	81 - 17
EA4600M#4	♦EAI	81 - 18
EA4700DC1	♦EAI	74 - 20
EA4700DC	♦EAI	74 - 14
EA4700DL	♦EAI	74 - 59
EA4700DM	♦EAI	74 - 22
EA4700PC1	♦EAI	74 - 21
EA4700PC	♦EAI	74 - 15
EA4800#1	♦EAI	81 - 1
EA4800#2	♦EAI	81 - 2
EA4800#3	♦EAI	81 - 76
EA4800#4	♦EAI	81 - 77
EA4900#1	♦EAI	79 - 74
EA4900#2	♦EAI	79 - 75
EA4900C#1	♦EAI	79 - 76
EA4900C#2	♦EAI	79 - 77
EA4900L#1	♦EAI	81 - 30
EA4900L#2	♦EAI	81 - 31
EDH81H32-45c	none	55 -101
EDH81H32-55c	none	55 -102
EDH8808-150J883B	none	53 - 25
EDH8808-150J883C	none	53 - 26
EDH8808-150PCHR	none	53 - 27
EDH8808C85CC	none	53 - 24
EF68A10CP	THEF	24 - 25
EF4116BC-15	♦THEF	54 - 58
EF4116BC-20	♦THEF	54 - 68
EF4116BC-25	♦THEF	54 - 81
EF4116BC-30	♦THEF	54 - 95
EF4116BJ-15	♦THEF	54 - 59
EF4116BJ-20	♦THEF	54 - 69
EF4116BJ-25	♦THEF	54 - 82
EF4116BJ-30	♦THEF	54 - 96
EF6810CMB	THEF	24 - 26
EF6810CP	THEF	24 - 27
ER1105	♦GIC	62 - 58
ER1711	GIC	110 - 19
ER2050	GIC	58 - 70
ER2401	GIC	73 - 10
ER2401A	GIC	73 - 13
ER2800	♦GIC	78 - 27
ER2805	GIC	78 - 28
ER3401	GIC	73 - 9
F10145APC	♦FSC	21 - 26
F10411DC	♦FSC	24 - 62
F10411FC	♦FSC	24 - 63
F10411PC	♦FSC	24 - 64
FCJ221	RTCF	91 - 38
FDN106	♦MULB	101 - 45
♦PHIN	♦VALG	
FDN116	♦MULB	101 - 43
♦PHIN	♦VALG	
FDN126	♦MULB	102 - 23
♦PHIN	♦VALG	
FDN136	♦MULB	102 - 18
♦PHIN	♦VALG	
FDN141A	♦SIEG	105 - 31
FDN146	♦MULB	105 - 32
♦PHIN	♦VALG	
FDN146A	MULB	105 - 33
♦PHIN	♦VALG	
FDN151A	♦SIEG	105 - 21
FDN156	♦MULB	105 - 22
♦PHIN	♦VALG	
FDN156A	MULB	105 - 23
♦PHIN	♦VALG	
FDN166A	MULB	105 - 50
	PHIN	
FDN186	MULB	100 - 79
PHIN	♦VALG	
FDN196A	MULB	105 - 49
PHIN	♦VALG	
FDN206	MULB	104 -109
PHIN	♦VALG	
FDN206A	MULB	104 -110
PHIN	♦VALG	
FDN216A	MULB	106 - 33
	♦VALG	
FDN506	MULB	101 - 21
PHIN	♦VALG	
FDN516A	MULB	101 - 22
PHIN	♦VALG	
FDN526A	MULB	104 - 22
PHIN	♦VALG	
FDQ106	♦MULB	23 - 21
♦PHIN	♦RTCF	
	♦VALG	
FDR106Z1	♦MULB	65 - 15
FDR106Z1#1	♦MULB	84 - 12
FDR106Z1#2	♦MULB	84 - 14
FDR106Z1#3	♦MULB	84 - 21
FDR106Z1#4	♦MULB	88 - 36
FDR106Z	♦MULB	65 - 16
FDR106Z#1	♦MULB	65 - 17
♦RTCF	♦VALG	

TYPE No.	MFRS	Pg&Line
FDR106Z#2	♦MULB	65 - 90
♦RTCF	♦VALG	
FDR116Z1	♦MULB	84 - 8
PHIN	♦RTCF	
SIC	♦VALG	
FDR116Z2	MULB	84 - 9
PHIN	♦RTCF	
SIC	♦VALG	
FDR116Z	♦MULB	68 - 3
PHIN	♦RTCF	
SIC	♦VALG	
FDR126Z1#1	♦MULB	87 - 61
PHIN	♦RTCF	
SIC	♦VALG	
FDR126Z	♦MULB	65 - 25
PHIN	♦RTCF	
SIC	VALG	
FDR131Z1#1	♦MULB	87 - 47
PHIN	♦RTCF	
SIC	♦VALG	
FDR131Z1#2	♦MULB	88 - 11
PHIN	♦RTCF	
SIC	VALG	
FDR131Z#1	♦MULB	69 - 29
PHIN	♦RTCF	
SIC	VALG	
FDR131Z#2	♦MULB	71 - 89
PHIN	SIC	
FDR146BZ1	MULB	84 - 56
PHIN	RTCF	
SIC	VALG	
FDR146BZ2	MULB	85 - 30
PHIN	RTCF	
SIC	VALG	
FDR146BZ	MULB	71 - 17
PHIN	RTCF	
SIC	VALG	
FDR146Z1	MULB	84 - 57
PHIN	RTCF	
SIC	♦VALG	
FDR146Z2	MULB	85 - 31
PHIN	RTCF	
SIC	VALG	
FDR146Z	MULB	71 - 18
PHIN	RTCF	
SIC	VALG	
FDR151BZ	MULB	79 - 78
PHIN	RTCF	
SIC	VALG	
FDR151Z	MULB	79 - 79
PHIN	RTCF	
SIC	VALG	
FDR161BZ	VALG	76 - 88
FDY850Z	♦VALG	76 - 89
FJB93H00	MULB	94 - 5
FJB93H72	MULB	94 - 6
FJB93L00	MULB	92 - 1
FJB93L28	MULB	99 - 97
FJB9300	♦RTCF	92 - 62
FJB9328	♦MULB	99 -104
FJB9334	MULB	20 - 60
FJB9338	MULB	20 - 5
FJB9396	MULB	95 - 20
FJB93164	MULB	99 - 7
FJB93165	MULB	98 - 58
FJB93198	MULB	97 - 41
FJB93404	MULB	21 - 79
FJB93406	MULB	60 - 30
FJB93410	♦MULB	25 -103
FJB93415	♦MULB	34 - 81
FJB93434	♦MULB	57 - 63
FJJ151	♦RTCF	99 - 44
FJJ151-7491A	♦MULB	99 - 45
	♦VALG	
FJJ151A-7491A		99 - 46
	♦MULB	
FJJ181-7475	♦MULB	90 - 33
♦PHIN	SIC	
FJJ231	RTCF	93 - 99
FJJ241	♦MULB	95 - 21
	RTCF	
FJJ241-7496	♦VALG	95 - 49
FJJ241A	♦MULB	95 - 22
FJJ321	RTCF	94 - 64
FJJ371	♦RTCF	99 - 86
FJQ111	MULB	22 - 15
RTCF	VALG	
FLH561-74184	SIEG	88 - 68
FLH565-84184	SIEG	88 - 69
FLH571-74185A	SIEG	88 - 71
FLH575-84185A	SIEG	88 - 72
FLJ151-7475	♦SIEG	90 - 34
FLJ155-8475	SIEG	90 - 35
FLJ161-7490	SIEG	92 - 18
FLJ165-8490	SIEG	92 - 19
FLJ191-7495A	SIEG	92 - 63
FLJ195-8495A	SIEG	92 - 64
FLJ221-7491A	SIEG	99 - 47
FLJ225-8491A	SIEG	99 - 48
FLJ231-7494	SIEG	91 - 57
FLJ235-8494	SIEG	91 - 58
FLJ261-7496	♦SIEG	95 - 23
FLJ265-8496	♦SIEG	95 - 24
FLJ311-74198	SIEG	96 - 90
FLJ315-84198	SIEG	96 - 91
FLJ321-74199	SIEG	96 - 92
FLJ325-84199	SIEG	96 - 93
FLJ361-74118	SIEG	95 - 89
FLJ365-84118	SIEG	95 - 90
FLJ371-74119	SIEG	95 - 91
FLJ375-84119	SIEG	95 - 92
FLJ441-74164	SIEG	98 -106
FLJ445-84164	SIEG	98 -107
FLJ451-74165	SIEG	98 - 46

TYPE No.	MFRS	Pg&Line
FLJ455-84165	SIEG	98 - 47
FLJ461-74166	SIEG	96 - 94
FLJ465-84166	SIEG	96 - 95
FLJ481-4932	SIEG	99 - 98
FLJ485-49832	SIEG	99 - 99
FLJ491-49702	SIEG	92 - 2
FLJ495-49802	SIEG	92 - 3
FLJ531-74174	SIEG	95 - 93
FLJ535-84174	SIEG	95 - 94
FLJ541-74175	SIEG	90 - 36
FLJ545-84175	SIEG	90 - 37
FLJ551-74194	SIEG	92 - 65
FLJ555-84194	SIEG	92 - 66
FLJ561-74195	SIEG	93 - 40
FLJ565-84195	SIEG	93 - 41
FLQ101-7489	SIEG	22 - 31
FLQ105-8489	SIEG	22 - 32
FLQ111-7481A	SIEG	20 - 76
FLQ115-8481A	SIEG	20 - 77
FLQ121-7484A	SIEG	20 - 78
FLQ125-8484A	SIEG	20 - 79
FLQ131-74170	SIEG	20 - 56
FLQ135-84170	SIEG	20 - 57
FLQ141-74200	SIEG	26 - 27
FLR121	♦SIEG	58 - 25
FLR131	♦SIEG	61 - 94
FR1502E00	WDC	101 - 76
FR1502E01	WDC	101 - 74
FR1502E1C	WDC	100 - 7
FR1502E02	WDC	101 - 70
FR1502E2C	WDC	100 - 5
FR1502E3C	WDC	100 - 11
FR1502E12	WDC	101 - 71
FR1502E	WDC	101 - 77
FR1502EC	WDC	100 - 9
FR1502F00	WDC	101 - 78
FR1502F01	WDC	101 - 75
FR1502F1C	WDC	100 - 8
FR1502F02	WDC	101 - 72
FR1502F2C	WDC	100 - 6
FR1502F3C	WDC	100 - 12
FR1502F12	WDC	101 - 73
FR1502FC	WDC	100 - 10
FT19	♦XDS	94 - 73
G5316D3	♦GTE	78 - 34
G5316D3#ai	GTE	78 - 88
G5316P3	♦GTE	78 - 35
G5316P3#ai	GTE	78 - 89
GDN116	SIEG	102 - 19
GDN116A	SIEG	102 - 20
GDQ101	SIEG	26 - 60
GDQ106	SIEG	26 - 61
GER542W1#1	♦GESY	81 - 8
GER542W1#2	♦GESY	77 - 15
GER542W1#3	♦GESY	71 - 90
GER542W1#4	♦GESY	69 - 32
GER543W1	GESY	84 -103
GER1101	♦GESY	27 - 46
GER1103	♦GESY	33 - 84
GER11011	♦GESY	27 - 45
GFB7495	♦RTCF	92 - 67
GFB7496	♦RTCF	95 - 25
GFB74195	♦RTCF	92 - 68
GTB3101AD	♦RTCF	21 - 71
GTC3101AD	♦RTCF	21 - 80
GWN105	♦ALGG	103 - 5
GXB10139F	SIC	57 - 73
GXB10139N	SIC	57 - 74
GXB10146	RTCF	34 - 3
GXB10147A	SIEG	23 -110
GXB10149A	♦SIEG	60 - 95
GXB10151	RTCF	23 - 7
GXB10410	♦PHIN	24 - 65
RTCF	SIC	
GXB10422AN	RTCF	27 - 80
GXB10422F	RTCF	27 - 85
GXB10422N	RTCF	27 - 86
GXB95410	RTCF	24 - 45
GXB100415	RTCF	33 -107
GXB100422AF	RTCF	27 - 76
GXB100422AN	RTCF	27 - 77
GXB100422F	RTCF	27 - 81
GXB100422N	RTCF	27 - 82
GYN101A	♦VALG	102 - 24
GYN111	♦VALG	104 - 14
GYN121	♦VALG	103 - 19
GYN131	♦VALG	102 - 79
GYQ101	MULB	33 - 45
PHIN	RTCF	
SIC	VALG	
GYQ131	♦VALG	33 - 19
GZF1100	♦RTCF	98 - 75
GZF1106	♦RTCF	102 - 99
GZF1106P	♦MULB	102 -101
♦PHIN	SIC	
GZF1400	♦RTCF	26 - 96
GZF1400D	♦MULB	26 - 71
	♦VALG	
GZF1400P	♦MULB	26 - 90
♦PHIN	SIC	
GZN101	♦VALG	99 - 34
GZQ101	♦VALG	26 - 58
H1702A2	ITL	64 - 86
H1702A	ITL	64 - 90
H1702AL2	ITL	64 - 87
H1702AL	ITL	64 - 91
H2708	ITL	76 - 14
H5200D	♦MMI	60 - 1
H5200N	♦MMI	60 - 2
H5201D	♦MMI	60 - 3
H5201N	♦MMI	60 - 4
H6200D	♦MMI	59 - 92
H6200N	♦MMI	59 - 93
H6201D	♦MMI	59 - 94

TYPE No.	MFRS	Pg&Line
H6201N	♦MMI	59 - 95
HAB1500-1	VALG	32 -100
HAB1501	MULB	32 -101
♦PHIN	♦RTCF	
SIC	VALG	
HAB1502	MULB	32 -103
PHIN	RTCF	
SIC	VALG	
HD1-54C164	HAS	98 - 76
HD1-54C165	HAS	98 - 4
HD1-54C173	HAS	91 - 92
HD1-54C174	HAS	96 - 4
HD1-54C175	HAS	91 - 93
HD1-54C195	HAS	91 - 78
HD1-54C200	HAS	26 - 91
HD1-54C89	HAS	22 - 81
HD1-54C95	HAS	91 - 79
HD1-74C164	HAS	98 - 77
HD1-74C165	HAS	98 - 5
HD1-74C173	HAS	91 - 94
HD1-74C174	HAS	96 - 5
HD1-74C175	HAS	91 - 95
HD1-74C195	HAS	91 - 23
HD1-74C200	HAS	26 - 92
HD1-74C89	HAS	22 - 82
HD1-74C95	HAS	91 - 80
HD1-4006A2	HAS	95 - 67
HD1-4006A9	HAS	95 - 68
HD1-4014A2	HAS	97 - 90
HD1-4014A9	HAS	97 - 73
HD1-4015A2	HAS	94 - 91
HD1-4015A9	HAS	94 - 85
HD1-4021A2	HAS	97 - 91
HD1-4021A9	HAS	97 - 74
HD1-4035A2	HAS	90 - 87
HD1-4035A9	HAS	90 - 70
HD1-4042A2	HAS	90 - 56
HD1-4042A9	HAS	90 - 57
HD9-54C164	HAS	98 - 78
HD9-54C165	HAS	98 - 6
HD9-54C173	HAS	91 - 96
HD9-54C174	HAS	96 - 6
HD9-54C175	HAS	91 - 97
HD9-54C195	HAS	91 - 81
HD9-54C200	HAS	26 - 93
HD9-54C89	HAS	22 - 83
HD9-54C95	HAS	91 - 82
HD9-74C164	HAS	98 - 79
HD9-74C165	HAS	98 - 7
HD9-74C173	HAS	91 - 98
HD9-74C174	HAS	96 - 7
HD9-74C175	HAS	91 - 99
HD9-74C195	HAS	91 - 24
HD9-74C200	HAS	26 - 94
HD9-74C89	HAS	22 - 84
HD9-74C95	HAS	91 - 83
HD9-4014A2	HAS	97 - 92
HD9-4014A9	HAS	97 - 75
HD9-4015A2	HAS	94 - 92
HD9-4015A9	HAS	94 - 86
HD9-4021A2	HAS	97 - 93
HD9-4021A9	HAS	97 - 76
HD9-4035A2	HAS	90 - 88
HD9-4035A9	HAS	90 - 71
HD9-4042A2	HAS	90 - 58
HD9-4042A9	HAS	90 - 59
HD21S145	HITJ	102 - 15
HD2316	♦HITJ	20 - 75
HD2524	♦HITJ	99 - 49
HD2524P	♦HITJ	99 - 50
HD2533	♦HITJ	94 - 31
HD2533P	♦HITJ	94 - 32
HD2534	HITJ	94 - 62
HD2534P	HITJ	94 - 63
HD2546	HITJ	95 - 56
HD2546P	HITJ	95 - 57
HD3101P	HITJ	99 - 87
HD3109P	HITJ	102 - 10
HD3116P	HITJ	100 - 48
HD3117P	HITJ	101 - 79
HD3118P	HITJ	100 - 37
HD3119P	HITJ	102 - 11
HD3213P	HITJ	102 - 54
HD3214P	HITJ	102 - 83
HD3220P	HITJ	106 - 17
HD3224P	HITJ	102 - 16
HD3502	HITJ	105 - 69
HD3503	HITJ	106 - 56
HD3504	HITJ	107 - 14
HD3505	HITJ	106 - 16
HD3506	HITJ	103 - 68
HD3507	HITJ	103 - 69
HD3508	HITJ	102 - 91
HD3509	HITJ	104 - 39
HD3510	HITJ	105 - 17
HD3523	HITJ	103 - 7
HD3524	HITJ	103 - 8
HEF4721	RTCF	29 - 55
HEF4736	RTCF	36 - 64
HEPC3802P-RT	MOTA	86 - 40
HM1-6501B2	HAS	28 - 16
HM1-6501B9	HAS	28 - 17
HM1-6501D5	HAS	28 - 4
HM1-6508D5	HAS	36 - 4
HM1-6518D5	HAS	36 - 5
HM1-6551D5	HAS	28 - 5
HM1-6561D5	HAS	28 - 6
HM1-6562B2	HAS	28 - 18
HM1-6562D5	HAS	28 - 7
HM1-6610-2	HAS	62 - 33
HM1-6610-9	HAS	62 - 34
HM1-6610B2	HAS	62 - 35
HM1-6610B9	HAS	62 - 36
HM1-6610D5	HAS	62 - 56

TYPE No.	MFRS	Pg&Line
HM1-6611B2	HAS	62 - 37
HM1-6611B9	HAS	62 - 38
HM1-6612-2	HAS	62 - 39
HM1-6612-9	HAS	62 - 40
HM1-6612B2	HAS	62 - 41
HM1-6612B9	HAS	62 - 42
HM1-6612D5	HAS	62 - 57
HM1-7625R2	HAS	64 - 70
HM1-7625R5	HAS	64 - 38
HM1-7629-5	HAS	64 - 51
HM1-7645-2	HAS	72 - 69
HM1-7645-5	HAS	72 - 28
HM1-7645P2	HAS	72 - 70
HM1-7645P5	HAS	72 - 29
HM1-7683-2	HAS	75 - 35
HM1-7683-5	HAS	75 - 22
HM1-7686-2	HAS	77 -108
HM1-7686-5	HAS	77 - 71
HM1-7686P2	HAS	78 - 1
HM1-7686P5	HAS	77 - 72
HM1-7686RP2	HAS	78 - 2
HM1-7686RP5	HAS	77 - 73
HM1-7686R2	HAS	78 - 3
HM1-7686R5	HAS	77 - 74
HM1-7687-2	HAS	78 - 4
HM1-7687-5	HAS	77 - 75
HM1-7687P2	HAS	78 - 5
HM1-7687P5	HAS	77 - 76
HM1-7687RP2	HAS	78 - 6
HM1-7687RP5	HAS	77 - 77
HM1-7687R2	HAS	78 - 7
HM1-7687R5	HAS	77 - 78
HM3-6312-2	HAS	76 - 98
HM3-6312A2	HAS	76 - 93
HM3-6501-2	HAS	28 - 29
HM3-6501B2	HAS	28 - 19
HM3-6501B9	HAS	28 - 20
HM3-6543-2	HAS	49 - 6
HM3-6562-2	HAS	28 - 30
HM3-6562B2	HAS	28 - 21
HM3-7625R2	HAS	64 - 71
HM3-7625R5	HAS	64 - 39
HM3-7629-5	HAS	64 - 52
HM3-7640AR2	HAS	70 - 37
HM3-7640A2	HAS	70 - 38
HM3-7641AR2	HAS	70 - 39
HM3-7641A2	HAS	70 - 40
HM3-7642A2	HAS	72 - 71
HM3-7642P2	HAS	72 - 72
HM3-7643A2	HAS	72 - 73
HM3-7643P2	HAS	72 - 74
HM3-7644-2	HAS	72 - 97
HM3-7644A2	HAS	72 - 56
HM3-7645-2	HAS	72 - 75
HM3-7645-5	HAS	72 - 30
HM3-7645P2	HAS	72 - 76
HM3-7645P5	HAS	72 - 31
HM3-7647R2	HAS	70 - 54
HM3-7680P2	HAS	75 - 36
HM3-7681P2	HAS	75 - 37
HM3-7681RP2	HAS	75 - 38
HM9-76LS03-5	HAS	57 -109
HM9-6312-9	HAS	76 - 97
HM9-6312A9	HAS	76 - 92
HM9-6312C9	HAS	76 - 99
HM9-6501-5	HAS	28 - 32
HM9-6501B2	HAS	28 - 22
HM9-6501B9	HAS	28 - 23
HM9-6512-9	HAS	23 - 87
HM9-6512C9	HAS	23 - 88
HM9-6533-9	HAS	39 - 77
HM9-6533C9	HAS	39 - 78
HM9-6543-9	HAS	49 - 7
HM9-6543C9	HAS	49 - 8
HM9-6562-5	HAS	28 - 33
HM9-6562B2	HAS	28 - 24
HM9-6610-2	HAS	62 - 43
HM9-6610-9	HAS	62 - 44
HM9-6610B2	HAS	62 - 45
HM9-6610B9	HAS	62 - 46
HM9-6611A9	HAS	62 - 31
HM9-6611B2	HAS	62 - 47
HM9-6611B9	HAS	62 - 48
HM9-6612-2	HAS	62 - 49
HM9-6612-9	HAS	62 - 50
HM9-6612B2	HAS	62 - 51
HM9-6612B9	HAS	62 - 52
HM9-7625R2	HAS	64 - 72
HM9-7625R5	HAS	64 - 40
HM9-7629-5	HAS	64 - 53
HM9-7640AR5	HAS	69 -105
HM9-7640A5	HAS	69 -106
HM9-7642A5	HAS	72 - 32
HM9-7642P5	HAS	72 - 33
HM9-7643A5	HAS	72 - 34
HM9-7643P5	HAS	72 - 35
HM9-7644-5	HAS	72 - 57
HM9-7644A5	HAS	72 - 36
HM9-7645-2	HAS	72 - 77
HM9-7645-5	HAS	72 - 37
HM9-7645P2	HAS	72 - 78
HM9-7645P5	HAS	72 - 38
HM9-7647R5	HAS	70 - 22
HM9-7680P5	HAS	75 - 23
HM9-7680RP5	HAS	75 - 24
HM9-7681P5	HAS	75 - 25
HM9-7681RP5	HAS	75 - 26
HM9-7683-2	HAS	75 - 39
HM9-7683-5	HAS	75 - 27
HM9-7684P5	HAS	77 - 79
HM9-7686-2	HAS	78 - 8
HM9-7686-5	HAS	77 - 80
HM9-7686P2	HAS	78 - 9
HM9-7686P5	HAS	77 - 81

♦-Mfr's data sheet available in microfilm service

Cur-In current D.A.T.A.BOOK
Δ-Registered with JEDEC by this manufacturer

Obs-In this book

1. TYPE No. CROSS INDEX

IN TYPE NUMBER SEQUENCE

TYPE No.	MFRS	Pg&Line
HM9-7686RP2	HAS	78 - 10
HM9-7686RP5	HAS	77 - 82
HM9-7686R2	HAS	78 - 11
HM9-7686R5	HAS	77 - 83
HM9-7687-2	HAS	78 - 12
HM9-7687-5	HAS	77 - 84
HM9-7687P2	HAS	78 - 13
HM9-7687P5	HAS	77 - 85
HM9-7687RP2	HAS	78 - 14
HM9-7687RP5	HAS	77 - 86
HM9-7687R2	HAS	78 - 15
HM9-7687R5	HAS	77 - 87
HM2101	HITJ	20 - 66
HM2104	♦HITJ	24 - 70
HM2110-2	♦HITJ	33 -108
HM2110G	HITJ	34 - 4
HM2110G-1	HITJ	34 - 1
HM2110G-2	HITJ	33 -109
HM2112A	HITJ	36 - 80
HM2112B	HITJ	36 - 81
HM2501	HITJ	20 -110
HM2502	HITJ	21 - 7
HM2505	♦HITJ	26 - 16
HM2510G	HITJ	34 - 83
HM2510G-1	HITJ	34 - 76
HM2510G-2	HITJ	34 - 63
HM2511-2	HITJ	34 - 64
HM2540	HITJ	48 - 95
HM3503-1	♦HITJ	39 - 6
HM4503	♦HITJ	45 - 23
HM4507	♦HITJ	47 - 55
HM4511	HITJ	45 -107
HM4511-1	HITJ	45 - 52
HM4517	♦HITJ	47 - 56
HM4517-1	♦HITJ	47 - 29
HM4704-1	♦HITJ	45 -108
HM4704-2	♦HITJ	46 - 73
HM4704L-2	♦HITJ	45 - 53
HM4704L-3	♦HITJ	45 -109
HM4704L-4	♦HITJ	46 - 74
HM4704L-6	♦HITJ	48 - 2
HM4710	♦HITJ	45 - 37
HM4711-1	♦HITJ	45 - 42
HM4711-2	♦HITJ	45 - 54
HM4711-3	♦HITJ	45 -110
HM4716-3	HITJ	53 - 94
HM4716-4	HITJ	54 - 18
HM4816	HITJ	53 - 53
HM4847	♦HITJ	49 - 44
HM4847-2	♦HITJ	50 - 82
HM4847-3	♦HITJ	49 - 36
HM6117FP3#ai	♦HITJ	44 - 64
HM6117FP4#ai	♦HITJ	44 - 65
HM6117LFP3	♦HITJ	44 - 63
HM6117LFP4	♦HITJ	44 - 66
HM6148LP-3	HITJ	39 - 52
HM6148P-3	HITJ	39 - 53
HM6322-9	HAS	76 - 96
HM6322A9	HAS	76 - 94
HM6322C9	HAS	76 - 95
HM6501-9	♦HAS	28 - 8
HM6501B9	♦HAS	28 - 9
HM6503-9	♦HAS	43 -109
HM6504-9	♦HAS	48 -103
HM6505-9	HAS	48 -104
HM6508-9	♦HAS	34 -108
HM6511-9	♦HAS	23 - 82
HM6511C9	♦HAS	23 - 83
HM6512-9	♦HAS	23 - 84
HM6512C9	♦HAS	23 - 85
HM6513-9	♦HAS	32 - 36
HM6514-9	♦HAS	39 - 48
HM6514B9	♦HAS	39 - 49
HM6518-9	♦HAS	34 -109
HM6518B9	♦HAS	34 -110
HM6533-9	HAS	39 - 50
HM6533C9	HAS	39 - 51
HM6543-9	♦HAS	48 -105
HM6543C9	♦HAS	48 -106
HM6551-9	♦HAS	28 - 10
HM6551B9	♦HAS	28 - 11
HM6561-9	♦HAS	28 - 12
HM6561B9	♦HAS	28 - 13
HM6562-9	♦HAS	28 - 14
HM6562B9	♦HAS	28 - 15
HM6564-9	♦HAS	53 - 23
HM6611-9	♦HAS	62 - 55
HM6611A9	♦HAS	62 - 53
HM6641-9	HAS	70 - 97
HM6661-9	♦HAS	62 - 54
HM6661A9	♦HAS	62 - 32
HM45102	HITJ	38 - 9
HM100474F1	HITJ	39 - 31
HM435101	♦HITJ	36 - 13
HM435101-1	♦HITJ	35 - 81
HM435101-V	♦HITJ	36 - 14
HM435101P	♦HITJ	28 - 73
HM435101P-1	♦HITJ	28 - 45
HM435101V	♦HITJ	28 - 74
HM435101VP	♦HITJ	28 - 75
HM452102-3	♦HITJ	37 - 73
HM452102-4	♦HITJ	37 - 91
HN3200P	HITJ	63 - 86
HN3250P	HITJ	69 - 31
HN46332P	♦HITJ	82 - 81
HN46532-2	HITJ	81 -106
HN46532-3	HITJ	82 - 9
HN46532P-2	HITJ	82 - 5
HN46532P-3	HITJ	82 - 8
HN46830	HITJ	76 - 48
HN46830A	HITJ	74 - 44
HN46830P	HITJ	76 - 49
HN48016	HITJ	80 - 72
HN351702A	♦HITJ	64 -101

TYPE No.	MFRS	Pg&Line
HN462316EP	HITJ	80 -105
HN462708	♦HITJ	76 - 15
HPROM0512-2	♦HAS	58 - 88
HPROM0512-5	♦HAS	58 - 89
HPROM0512-8	♦HAS	58 - 85
HPROM1024-2	♦HAS	61 - 70
HPROM1024-5	♦HAS	61 - 71
HPROM1024-8	♦HAS	61 - 72
HPROM1024A2	♦HAS	61 - 73
HPROM1024A5	♦HAS	61 - 74
HPROM1024A8	♦HAS	61 - 75
HPROM1256-2	♦HAS	59 - 53
HPROM1256-5	♦HAS	59 - 54
HPROM1256-8	♦HAS	59 - 50
HPROM8256-2	♦HAS	58 - 26
HPROM8256-5	♦HAS	58 - 27
HPROM8256-8	♦HAS	58 - 28
HRAM0016-2	HAS	20 -108
HRAM0016-5	HAS	20 -109
HRAM0064-2	HAS	22 - 33
HRAM0064-5	HAS	22 - 34
HRM2048	♦ECV	58 - 98
HRM2048#1	♦ECV	77 - 14
HRM2048#2	♦ECV	71 - 45
HRM2048#3	♦ECV	67 -104
HRM2048#4	♦ECV	65 - 12
HRM2048#5	♦ECV	59 - 47
HRM2048#6	♦ECV	58 - 99
HROM0512-2	HAS	58 - 86
HROM0512-5	HAS	58 - 87
HROM1024-2-0002	♦HAS	87 - 96
HROM1024-2-0003	♦HAS	87 - 97
HROM1024-2-0004	♦HAS	87 - 30
HROM1024-2-0005	♦HAS	87 - 31
HROM1024-5-0002	♦HAS	87 - 98
HROM1024-5-0003	♦HAS	87 - 99
HROM1024-5-0004	♦HAS	87 - 32
HROM1024-5-0005	♦HAS	87 - 33
HROM1024B2	♦HAS	60 - 37
HROM1024B2-0002	♦HAS	87 -100
HROM1024B2-0003	♦HAS	87 -101
HROM1024B2-0004	♦HAS	87 - 34
HROM1024B2-0005	♦HAS	87 - 35
HROM1024B5	♦HAS	60 - 38
HROM1024B5-0002	♦HAS	87 -102
HROM1024B5-0003	♦HAS	87 -103
HROM1024B5-0004	♦HAS	87 - 36
HROM1024B5-0005	♦HAS	87 - 37
HROM1256-2	♦HAS	59 - 51
HROM1256-5	♦HAS	59 - 52
HROM2560-2	♦HAS	68 - 1
HROM2561-2	♦HAS	84 - 10
HYB4060	♦SIEG	47 - 57
HYB4060A	♦SIEG	48 - 3
HYB4116-A3	♦SIEG	53 - 95
HYB4116-A4	♦SIEG	54 - 19
HYB4116-A5	♦SIEG	54 - 45
HYB4116-P4	♦SIEG	54 - 20
I106	♦ICC	96 - 52
I107	♦ICC	96 - 53
I768	ICC	100 - 40
I769	ICC	100 - 41
IB2118-10	♦ITL	54 -105
IB2118-12	♦ITL	55 - 1
IB2118-15	ITL	55 - 8
IB2141-2	ITL	51 - 84
IB2141-3	ITL	51 - 95
IB2141-4	ITL	52 - 2
IB2141-5	ITL	52 - 19
IB2141L3	ITL	51 - 96
IB2141L4	ITL	52 - 3
IB2141L5	ITL	52 - 20
IB2147HL3	ITL	51 - 66
IB2147HL	ITL	51 - 73
IB2164-15	ITL	56 - 25
IB2164-20	ITL	56 - 36
IB2164-25	ITL	56 - 48
IB2167-10	ITL	55 - 54
IB2167-55	ITL	55 - 29
IB2167-70	ITL	55 - 39
IB2167L70	ITL	55 - 40
IB2186	♦ITL	52 -103
IB2186-25	♦ITL	53 - 5
IB2186-30	♦ITL	53 - 16
IB2186-35	♦ITL	53 - 20
IB2187	♦ITL	52 -104
IB2187-25	♦ITL	53 - 6
IB2187-30	♦ITL	53 - 7
IB2187-35	♦ITL	53 - 8
IC2118-12	ITL	55 - 2
IC2118-15	ITL	55 - 9
IC2141-2	ITL	51 - 85
IC2141-3	ITL	51 - 97
IC2141-4	ITL	52 - 4
IC2141-5	ITL	52 - 21
IC2141L3	ITL	51 - 98
IC2141L5	ITL	52 - 22
IC2164-15#ai	ITL	56 - 26

TYPE No.	MFRS	Pg&Line
IC2164-20#ai	ITL	56 - 37
IC2164-25#ai	ITL	56 - 49
IC2167-10#ai	ITL	55 - 55
IC2167-55#ai	ITL	55 - 30
IC2167-70#ai	ITL	55 - 41
IC2167L70#ai	ITL	55 - 42
IC2186-25	ITL	53 - 9
IC2186-30	ITL	53 - 17
IC2186-35	ITL	53 - 21
IC2186#ai	ITL	52 -105
IC2187-25	ITL	53 - 10
IC2187-30	ITL	53 - 18
IC2187-35	ITL	53 - 22
IC2187#ai	ITL	52 -106
ID2128-15#ai	ITL	44 - 20
ID2141-2	ITL	51 - 86
ID2141-3	ITL	51 - 99
ID2141-4	ITL	52 - 5
ID2141-5	ITL	52 - 23
ID2141L3	ITL	51 -100
ID2141L4	ITL	52 - 6
ID2141L5	ITL	52 - 24
ID2164-15#ai	ITL	56 - 27
ID2164-20#ai	ITL	56 - 38
ID2164-25#ai	ITL	56 - 50
ID2167-10#ai	ITL	55 - 56
ID2167-55#ai	ITL	55 - 31
ID2167-70#ai	ITL	55 - 43
ID2167L70#ai	ITL	55 - 44
ID2186#ai	ITL	52 -107
ID2708	ITL	76 - 16
IFR0211	♦EEC	95 -103
IFR2211	EEC	95 -104
IM53S08CDG	INL	73 - 66
IM53S08CJG	INL	73 - 67
IM53S08MDG	INL	73 - 87
IM53S08MJG	INL	73 - 88
IM53S09CDG	INL	76 - 51
IM53S09CJG	INL	76 - 52
IM53S09MDG	INL	76 - 59
IM53S09MJG	INL	76 - 60
IM53S10CDG	INL	76 - 69
IM53S10CJG	INL	76 - 70
IM53S10MDG	INL	76 - 77
IM53S10MJG	INL	76 - 78
IM53S18CDG	INL	73 - 68
IM53S18CJG	INL	73 - 69
IM53S18MDG	INL	73 - 89
IM53S18MJG	INL	73 - 90
IM53S19CDG	INL	76 - 53
IM53S19CJG	INL	76 - 54
IM53S19MDG	INL	76 - 61
IM53S19MJG	INL	76 - 62
IM53S20CDG	INL	76 - 71
IM53S20CJG	INL	76 - 72
IM53S20MDG	INL	76 - 79
IM53S20MJG	INL	76 - 80
IM55S08ACDE	INL	34 - 13
IM55S08ACJE	INL	34 - 14
IM55S08CDE	INL	34 - 25
IM55S08CJE	INL	34 - 26
IM55S08MDE	INL	34 - 37
IM55S08MJE	INL	34 - 38
IM55S18ACDE	INL	34 - 15
IM55S18ACJE	INL	34 - 16
IM55S18CDE	INL	34 - 27
IM55S18CJE	INL	34 - 28
IM55S18MDE	INL	34 - 39
IM55S18MJE	INL	34 - 40
IM55S23CJE	INL	24 -108
IM55S23MJE	INL	25 - 23
IM55S33CJE	INL	24 -109
IM55S33MJE	INL	25 - 24
IM631Z	INL	76 - 86
IM0641	INL	22 -110
IM1003	INL	24 - 3
IM1288E	INL	24 - 9
IM1289E	INL	24 - 31
IM1503	INL	24 - 6
IM4096X1	INL	48 - 90
IM4116-2CDE	INL	23 - 97
IM4116-2CJE	INL	23 - 98
IM4116-2CPE	INL	23 - 99
IM4116-3CDE	INL	23 -100
IM4116-3CJE	INL	23 -101
IM4116-3CPE	INL	23 -102
IM4116-4CDE	INL	23 -103
IM4116-4CJE	INL	23 -104
IM4116-4CPE	INL	23 -105
IM5501CDE	♦INL	22 - 35
IM5501CFE	♦INL	22 - 36
IM5501CPE	♦INL	22 - 37
IM5501MDE	♦INL	22 - 38
IM5501MFE	♦INL	22 - 39
IM5501MPE	♦INL	22 - 40
IM5502#1	♦INL	20 - 80
IM5502#2	♦INL	20 - 81
IM5503ACDE	♦INL	26 - 8
IM5503ACPE	♦INL	26 - 9
IM5503AMDE	♦INL	26 - 20
IM5503AMFE	♦INL	26 - 21
IM5503CDE	♦INL	26 - 28
IM5503CFE	♦INL	26 - 29
IM5503CPE	♦INL	26 - 30
IM5503MDE	♦INL	26 - 31
IM5503MFE	♦INL	26 - 32
IM5503MPE	♦INL	26 - 33
IM5508CDE	♦INL	34 - 88
IM5508MDE	♦INL	34 - 90
IM5512#1	♦INL	20 - 82
IM5512#2	♦INL	20 - 83
IM5522	INL	20 - 84
IM5523ACDE	♦INL	26 - 10
IM5523ACPE	♦INL	26 - 11

TYPE No.	MFRS	Pg&Line
IM5523AMDE	♦INL	26 - 22
IM5523AMFE	♦INL	26 - 23
IM5523CDE	♦INL	26 - 34
IM5523CFE	♦INL	26 - 35
IM5523CPE	♦INL	26 - 36
IM5523MDE	♦INL	26 - 37
IM5523MFE	♦INL	26 - 38
IM5523MPE	♦INL	26 - 39
IM5528CDE	INL	34 - 89
IM5528MDE	INL	34 - 91
IM5532	INL	20 - 85
IM5533ACDE	♦INL	26 - 12
IM5533ACPE	♦INL	26 - 13
IM5533AMDE	♦INL	26 - 24
IM5533AMFE	♦INL	26 - 25
IM5533CDE	♦INL	26 - 40
IM5533CFE	♦INL	26 - 41
IM5533CPE	♦INL	26 - 42
IM5533MDE	♦INL	26 - 43
IM5533MFE	♦INL	26 - 44
IM5533MPE	♦INL	26 - 45
IM5543CDE	INL	27 -100
IM5553CDE	INL	27 -101
IM5563CDE	INL	27 -102
IM5600CDE	♦INL	58 - 29
IM5600CFE	♦INL	58 - 30
IM5600CJE	♦INL	58 - 31
IM5600CPE	♦INL	58 - 32
IM5600MDE	♦INL	58 - 33
IM5600MFE	♦INL	58 - 34
IM5600MJE	♦INL	58 - 35
IM5603ACDE	♦INL	61 - 95
IM5603ACFE	♦INL	61 - 96
IM5603ACJE	♦INL	61 - 97
IM5603ACPE	♦INL	61 - 98
IM5603AMDE	♦INL	62 - 27
IM5603AMFE	♦INL	62 - 28
IM5603AMJE	♦INL	61 - 99
IM5603CDE	INL	62 - 29
IM5603CDE#	♦INL	61 -100
IM5603MDE	INL	62 - 20
IM5603MDE#	♦INL	61 -101
IM5603MFE	INL	61 -102
IM5603MFE#	♦INL	61 -103
IM5603MPE	INL	62 - 21
IM5604CDE	♦INL	67 - 78
IM5604CFE	INL	66 - 83
IM5604CFE#	♦INL	67 - 79
IM5604CJE	♦INL	67 - 80
IM5604CPE	INL	66 - 84
IM5604CPE#	♦INL	67 - 81
IM5604MDE	♦INL	67 - 82
IM5604MFE	♦INL	67 - 83
IM5604MJE	♦INL	67 - 84
IM5605CDG	♦INL	70 - 74
IM5605CJG	♦INL	70 - 75
IM5605MDG	♦INL	70 - 76
IM5605MJG	♦INL	70 - 82
IM5608-1ID	INL	35 - 49
IM5608-1IJ	INL	35 - 50
IM5608-1MD	INL	35 - 51
IM5608-1MF	INL	35 - 52
IM5608-1MJ	INL	35 - 53
IM5608A-1ID	♦INL	35 - 1
IM5608A-1IJ	♦INL	35 - 2
IM5608A-1MD	♦INL	35 - 3
IM5608A-1MF	♦INL	35 - 4
IM5608A-1MS	♦INL	35 - 5
IM5608AID	INL	35 - 16
IM5608AIJ	INL	35 - 17
IM5608AMD	INL	35 - 18
IM5608AMF	INL	35 - 19
IM5608AMJ	INL	35 - 20
IM5608CJ	INL	36 - 7
IM5608CP	INL	36 - 8
IM5608ID	INL	35 - 85
IM5608IJ	INL	35 - 86
IM5608IP	INL	35 - 87
IM5608MD	INL	35 - 88
IM5608MF	INL	35 - 89
IM5608MJ	INL	35 - 90
IM5610CDE	♦INL	58 - 36
IM5610CFE	♦INL	58 - 37
IM5610CJE	♦INL	58 - 38
IM5610CPE	♦INL	58 - 39
IM5610MDE	♦INL	58 - 40
IM5610MFE	♦INL	58 - 41
IM5610MJE	♦INL	58 - 42
IM5623ACDE	♦INL	61 -104
IM5623ACFE	♦INL	61 -105
IM5623ACJE	♦INL	61 -106
IM5623ACPE	♦INL	61 -107
IM5623AMDE	♦INL	61 -108
IM5623AMFE	♦INL	61 -109
IM5623AMJE	♦INL	61 -110
IM5623CDE	♦INL	62 - 1
IM5623CFE	♦INL	62 - 2
IM5623CJE	♦INL	62 - 3
IM5623CPE	♦INL	62 - 4
IM5623MDE	♦INL	62 - 5
IM5623MFE	♦INL	62 - 6
IM5623MJE	♦INL	62 - 7
IM5624CDE	♦INL	67 - 85
IM5624CFE	INL	66 - 85
IM5624CFE#	♦INL	67 - 86
IM5624CJE	♦INL	67 - 87
IM5624CPE	INL	66 - 86
IM5624CPE#	♦INL	67 - 88
IM5624MDE	♦INL	67 - 89
IM5624MFE	♦INL	67 - 90
IM5624MJE	♦INL	67 - 91
IM5625CDG	♦INL	70 - 77
IM5625CJG	♦INL	70 - 78
IM5625MDG	♦INL	70 - 79

TYPE No.	MFRS	Pg&Line
IM5625MJG	♦INL	70 - 83
IM6001-6C	INL	33 - 97
IM6001-6D	INL	33 - 98
IM6002-6D	INL	33 - 90
IM6002-6E	INL	33 - 91
IM6002-11CDF	INL	33 - 92
IM6002-11CDN	INL	33 - 93
IM6003-10CDF	INL	43 -102
IM6003-11CDF	INL	43 - 99
IM6364IDG	INL	83 - 43
IM6364IJG	INL	83 - 44
IM6364MDG	INL	82 - 93
IM6508-1IDE	INL	35 - 41
IM6508-1IDN	INL	35 - 42
IM6508-1MDE	INL	35 - 43
IM6508-1MDN	INL	35 - 44
IM6508A-1IDE	INL	35 - 6
IM6508A-1IDN	INL	35 - 45
IM6508A-1MDE	INL	35 - 7
IM6508A-1MDN	INL	35 - 46
IM6508AIDE	INL	35 - 21
IM6508AIDN	INL	35 - 78
IM6508AMDE	INL	35 - 22
IM6508AMDN	INL	35 - 79
IM6508CPE	♦INL	36 - 9
IM6508IDN	INL	35 - 91
IM6508MDE	INL	35 - 92
IM6508MDN	INL	35 - 93
IM6512A-IFN	INL	23 - 86
IM6512CDN	INL	23 - 90
IM6512CFN	INL	23 - 91
IM6512IFN	INL	23 - 89
IM6518-1IDE	INL	35 - 54
IM6518-1IDN	INL	35 - 55
IM6518-1MDE	INL	35 - 56
IM6518-1MDN	INL	35 - 57
IM6518A-1ID	INL	35 - 8
IM6518A-1IDE	INL	35 - 9
IM6518A-1IDN	INL	35 - 23
IM6518A-1IJ	INL	35 - 10
IM6518A-1MD	INL	35 - 11
IM6518A-1MDE	INL	35 - 12
IM6518A-1MDN	INL	35 - 24
IM6518A-1MF	INL	35 - 13
IM6518A-1MS	INL	35 - 14
IM6518AID	INL	35 - 25
IM6518AIDE	INL	35 - 26
IM6518AIDN	INL	35 - 27
IM6518AIJ	INL	35 - 28
IM6518AMD	INL	35 - 29
IM6518AMDE	INL	35 - 30
IM6518AMDN	INL	35 - 31
IM6518AMF	INL	35 - 32
IM6518AMJ	INL	35 - 33
IM6518CJ	♦INL	36 - 10
IM6518CP	♦INL	36 - 11
IM6518CPN	♦INL	36 - 12
IM6518ID	INL	35 - 94
IM6518IDE	INL	35 - 95
IM6518IDN	INL	35 - 96
IM6518IJ	INL	35 - 97
IM6518IP	INL	35 - 98
IM6518MD	INL	35 - 99
IM6518MDE	INL	35 -100
IM6518MDN	INL	35 -101
IM6518MF	INL	35 -102
IM6518MJ	INL	35 -103
IM6523CPE	INL	26 - 80
IM6523IDE	INL	26 - 81
IM6523IPE	INL	26 - 82
IM6523MDE	INL	26 - 83
IM6523MPE	INL	26 - 84
IM6524-1IDE	♦INL	26 -103
IM6524-1IDN	♦INL	26 - 76
IM6524-1MDE	♦INL	26 -104
IM6524-1MDN	♦INL	26 - 77
IM6524A-1IDE	♦INL	26 - 99
IM6524A-1IDN	♦INL	26 - 67
IM6524A-1MDE	♦INL	26 -100
IM6524A-1MDN	♦INL	26 - 68
IM6524AIDE	♦INL	26 -101
IM6524AIDN	♦INL	26 - 69
IM6524AMDE	♦INL	26 -102
IM6524AMDN	♦INL	26 - 70
IM6524CFE	INL	26 - 72
IM6524CPE	INL	26 - 73
IM6524IDE	INL	26 -105
IM6524IDN	INL	26 - 78
IM6524MDE	INL	26 -106
IM6524MDN	INL	26 - 79
IM6524MFE	INL	26 - 74
IM6524MPE	INL	26 - 75
IM6551-IDF	INL	28 - 64
IM6551-MDF	INL	28 - 65
IM6551A-IDF	INL	28 - 34
IM6551A-MDF	INL	28 - 35
IM6551AIDF	INL	28 - 25
IM6551AIJF	INL	28 - 26
IM6551AMDF	INL	28 - 27
IM6551AMJF	INL	28 - 28
IM6551CJF	INL	28 - 46
IM6551CPF	INL	28 - 47
IM6551IDF	INL	28 - 38
IM6551IJF	INL	28 - 39
IM6551MJF	INL	28 - 40
IM6551MPF	INL	28 - 41
IM6561-IDN	INL	28 - 66
IM6561-MDN	INL	28 - 67
IM6561A-IDN	INL	28 - 36
IM6561A-MDN	INL	28 - 37
IM6603AIDG	INL	73 - 4
IM6603AIJG	INL	73 - 5
IM6603IDG	INL	73 - 6
IM6603IJG	INL	73 - 7

♦-Mfr's data sheet available in microfilm service

Cur-In current D.A.T.A.BOOK
Δ-Registered with JEDEC by this manufacturer

Obs-In this book

1. TYPE No. CROSS INDEX

IN TYPE NUMBER SEQUENCE

TYPE No.	MFRS	Pg&Line
IM6604AIDG	INL	70 - 98
IM6604AIJG	INL	70 - 99
IM6604IDG	INL	70 -100
IM6604IJG	INL	70 -101
IM7001-12CDF	INL	38 - 90
IM7001-12CPF	INL	38 - 91
IM7001-15CDF	INL	38 - 95
IM7001-16CDF	INL	38 - 98
IM7003	INL	43 -110
IM7003-12CDF	INL	44 - 1
IM7003-12CPF	INL	44 - 2
IM7005-11-6B	INL	46 - 75
IM7005-12-6B	INL	47 - 58
IM7008-10-6D	INL	52 - 80
IM7008-11-6D	INL	52 - 82
IM7027P-2	INL	45 - 55
IM7027P-3	INL	46 - 1
IM7027P-4	INL	46 - 76
IM7101	INL	31 - 46
IM7111	INL	31 - 47
IM7112	INL	31 - 48
IM7116-3CDE	INL	53 - 96
IM7116-4CDE	INL	54 - 21
IM7116A-3CDE	INL	53 - 97
IM7116A-4CDE	INL	54 - 22
IM7141LCPN	INL	51 - 54
IM7270-11-6E	INL	46 - 2
IM7270-12-6E	INL	47 - 19
IM7280-11-6D	INL	46 - 3
IM7280-12-6D	INL	47 - 20
IM7280-14-6D	INL	48 - 4
IM7501CDE	INL	27 - 26
IM7501MDE	INL	27 - 27
IM7505A-1CJF	INL	45 - 56
IM7505A-2CJF	INL	46 - 4
IM7505ACJF	INL	47 - 59
IM7507	INL	47 - 60
IM7507-1	INL	46 - 77
IM7507-2	INL	46 - 5
IM7511CDE	INL	27 - 5
IM7511MDE	INL	27 - 10
IM7512CDE	INL	27 - 28
IM7512MDE	INL	27 - 41
IM7552-1CDE	INL	38 - 10
IM7552-1CPE	INL	38 - 11
IM7552-1MDE	INL	38 - 12
IM7552-1MPE	INL	38 - 13
IM7552-2CDE	INL	38 - 39
IM7552-2CPE	INL	38 - 40
IM7552-2MDE	INL	38 - 41
IM7552CDE	INL	38 - 60
IM7552CPE	INL	38 - 61
IM7552MDE	INL	38 - 62
IM7552MPE	INL	38 - 63
IM7601CDE	INL	60 - 74
IM7601MDE	INL	60 - 83
IM7602CDG	INL	59 - 19
IM7602MDG	INL	59 - 23
IM7603CDG	INL	63 - 62
IM7603MDG	INL	63 - 77
IM7604CDG	INL	68 - 18
IM7604MDG	INL	65 - 36
IM7605CDG	INL	68 - 19
IM7605MDG	INL	65 - 37
IM7702CDE	INL	105 - 89
IM7702MDE	INL	105 - 90
IM7703#1	INL	106 - 86
IM7703#2	INL	106 - 87
IM7703CMD	INL	106 - 88
IM7703CTV	INL	106 - 89
IM7704#1	INL	107 - 60
IM7704#2	INL	107 - 61
IM7704CMD	INL	107 - 62
IM7704CTV	INL	107 - 63
IM7706CTA	INL	103 -104
IM7706MTA	INL	103 - 83
IM7707CTA	INL	103 -105
IM7707MTA	INL	103 - 84
IM7708CDG	INL	76 - 46
IM7712CTV	INL	107 - 39
IM7712CTW	INL	107 - 40
IM7722CMD	INL	107 - 41
IM7722CPA	INL	107 - 42
IM7722CTA	INL	107 - 43
IM7722CTV	INL	107 - 44
IM7733CDA	INL	107 - 98
IM7733CPA	INL	107 - 99
IM7733CTY	INL	107 -100
IM7733MDA	INL	107 -101
IM7733MPA	INL	107 -102
IM7733MTY	INL	107 -103
IM7780CDC	INL	103 - 30
IM7780CDE	INL	103 - 31
IM7780CPE	INL	103 - 32
IM7780MDC	INL	103 - 33
IM600310	INL	43 -103
IM600311	INL	43 -100
IM700112-6D	INL	38 - 84
IM700112-6DP	INL	38 - 85
IM700115-6D	INL	38 - 88
IM700116-6D	INL	38 - 92
IM855003	INL	52 - 56
IM855004	INL	52 - 72
IP2118-10	ITL	54 -106
IP2118-12	ITL	55 - 3
IP2118-15	ITL	55 - 10
IP2128-15#ai	ITL	44 - 21
IP2128-20#ai	ITL	44 - 25
IP2141-2	ITL	51 - 87
IP2141-3	ITL	51 -101
IP2141-4	ITL	52 - 7
IP2141-5	ITL	52 - 25
IP2141L3	ITL	51 -102
IP2141L4	ITL	52 - 8

TYPE No.	MFRS	Pg&Line
IP2141L5	ITL	52 - 26
IP2147HL3	ITL	51 - 67
IP2147HL	ITL	51 - 74
IP2164-15#ai	ITL	56 - 28
IP2164-20#ai	ITL	56 - 39
IP2164-25#ai	ITL	56 - 51
IP2167-10#ai	ITL	55 - 57
IP2167-55	ITL	55 - 32
IP2167-55#ai	ITL	55 - 33
IP2167-70#ai	ITL	55 - 45
IP2167L70#ai	ITL	55 - 46
IP2186-25	ITL	53 - 11
IP2186-30	ITL	53 - 19
IP2186-35	ITL	53 - 12
IP2186#ai	ITL	52 -108
IP2187-25	ITL	53 - 13
IP2187-30	ITL	53 - 14
IP2187-35	ITL	53 - 15
ISR0212	♦EEC	94 - 69
ISR0253	EEC	100 - 31
ISR2212	EEC	94 - 70
ISR2253	EEC	100 - 32
ISR2276	EEC	94 - 71
ISR9005	EEC	105 - 51
ITT74LS174	♦ITTG	96 - 19
ITT74LS175	♦ITTG	93 - 42
ITT370-1D	ITTG	90 - 25
ITT370-5D	ITTG	90 - 26
ITT1103	♦ITTG	33 - 46
ITT1103-1	♦ITTG	33 - 20
ITT1144-1C	♦ITTG	104 - 96
ITT2147-55D	ITTG	50 - 85
ITT2147-55J	ITTG	50 - 86
ITT2147-55N	ITTG	50 - 87
ITT2147-70D	ITTG	50 - 96
ITT2147-70J	ITTG	50 - 97
ITT2147-70LD	ITTG	50 - 98
ITT2147-70LJ	ITTG	50 - 99
ITT2147-70LN	ITTG	50 -100
ITT2147-70N	ITTG	50 -101
ITT2147-90D	ITTG	50 -105
ITT2147-90J	ITTG	50 -106
ITT2147-90N	ITTG	50 -102
ITT2147H-55D	ITTG	50 - 88
ITT2147H-55N	ITTG	50 - 89
ITT2167-45D	ITTG	55 - 20
ITT2167-45N	ITTG	55 - 21
ITT2167-55D	ITTG	55 - 22
ITT2167-55N	ITTG	55 - 23
ITT2167-70D	ITTG	55 - 25
ITT2167-70N	ITTG	55 - 26
ITT2168-45D	ITTG	52 - 45
ITT2168-45N	ITTG	52 - 46
ITT2168-55D	ITTG	52 - 47
ITT2168-55N	ITTG	52 - 48
ITT2168-70D	ITTG	52 - 49
ITT2168-70N	ITTG	52 - 50
ITT3329-5C	♦ITTG	106 - 21
ITT3330-5C	ITTG	106 - 5
ITT3331-5C	ITTG	106 - 13
ITT3347	♦ITTG	103 - 49
ITT3357	♦ITTG	103 - 53
ITT3383-5C	♦ITTG	105 - 24
ITT3514-1	♦ITTG	69 - 10
ITT3514-2	♦ITTG	69 - 12
ITT4027-2D	♦ITTG	45 - 57
ITT4027-2J	ITTG	45 - 58
ITT4027-2N	♦ITTG	45 - 59
ITT4027-3D	♦ITTG	46 - 6
ITT4027-3J	ITTG	46 - 7
ITT4027-3N	♦ITTG	46 - 8
ITT4027-4D	♦ITTG	46 - 78
ITT4027-4J	ITTG	46 - 79
ITT4027-4N	♦ITTG	46 - 80
ITT4027-6	ITTG	48 - 5
ITT4027-6D	♦ITTG	48 - 6
ITT4027-6J	ITTG	48 - 7
ITT4027-6N	♦ITTG	48 - 8
ITT4116-2D	♦ITTG	53 - 72
ITT4116-2J	ITTG	53 - 73
ITT4116-2N	♦ITTG	53 - 74
ITT4116-3D	♦ITTG	53 - 98
ITT4116-3J	ITTG	53 - 99
ITT4116-3N	♦ITTG	53 -100
ITT4116-4D	♦ITTG	54 - 23
ITT4116-4J	ITTG	54 - 24
ITT4116-4N	♦ITTG	54 - 25
ITT4164-15	ITTG	56 - 3
ITT4164-20	ITTG	56 - 9
IXD2201A	♦XIC	38 -106
IXD2210	♦XIC	23 - 44
IXD2212D	♦XIC	31 - 51
KM8655	TAI	71 - 8
KM8656	TAI	76 - 50
KM8657	TAI	80 -106
KM8680	TAI	45 - 30
KMS4027	TAI	45 - 60
KMS4102	TAI	37 - 92
KMS4104	TAI	49 - 92
KMS4114	TAI	40 - 56
KMS4116	TAI	53 - 75
KMS36000	TAI	82 - 97
L2114-1CB	GTE	42 - 28
L2114-1CE#mil	GTE	42 - 29
L2114-2CA	GTE	40 - 57
L2114-2CA#mil	GTE	42 - 38
L2114-2CB	GTE	40 - 58
L2114-2CE	GTE	40 - 59
L2114-2CE#mil	GTE	42 - 39
L2114-2ME	GTE	42 - 40
L2114-3CA	GTE	41 - 30
L2114-3CB	GTE	41 - 31
L2114-3CE	GTE	41 - 32
L2114-3CE#mil	GTE	42 - 54

TYPE No.	MFRS	Pg&Line
L2114-3ME	GTE	42 - 55
L2114-UCA	GTE	42 - 76
L2114UCA	GTE	42 - 77
L2114UCA#mil	GTE	42 - 78
L2114UCB	GTE	42 - 79
L2114UCB#mil	GTE	42 - 80
L2114UCE	GTE	42 - 81
L2114UCE#mil	GTE	42 - 82
L2114UMA	GTE	42 - 83
L2114UME	GTE	42 - 84
L2141-3	GTE	51 - 16
L2141-4	GTE	51 - 26
L2141-5	GTE	51 - 37
L3539-1CD	GTE	31 - 93
L3539-1CP	GTE	31 - 94
L3539-2CD	GTE	31 -100
L3539-2CP	GTE	31 -101
L3539ACD	GTE	31 - 86
L3539ACP	GTE	31 - 87
L4044UCA	GTE	51 - 55
L4044UCB	GTE	51 - 56
L4044UCE	GTE	51 - 57
L5530	♦MMI	25 - 72
L5530F	♦MMI	25 - 73
L5530J	♦MMI	25 - 74
L5530N	♦MMI	25 - 75
L5531	♦MMI	25 - 76
L5531F	♦MMI	25 - 77
L5531J	♦MMI	25 - 78
L5531N	♦MMI	25 - 79
L5560D	♦MMI	22 - 66
L5560F	♦MMI	22 - 3
L5560J	♦MMI	22 - 4
L5560N	♦MMI	22 - 67
L5561D	♦MMI	22 - 68
L5561F	♦MMI	22 - 5
L5561J	♦MMI	22 - 6
L5561N	♦MMI	22 - 69
L6530	♦MMI	25 - 68
L6530N	♦MMI	25 - 69
L6531	♦MMI	25 - 70
L6531N	♦MMI	25 - 71
L6560D	♦MMI	22 - 64
L6560N	♦MMI	21 -109
L6561D	♦MMI	22 - 65
L6561N	♦MMI	21 -110
L21143MA	GTE	42 - 56
M5G2401S	MITJ	73 - 8
M5K4116P-4	MITJ	54 - 26
M5K4116P4	MITJ	54 - 27
M5K4116S-4	MITJ	54 - 28
M5K4116S4	MITJ	54 - 29
M5L1702AS#1	MITJ	64 -102
M5L1702AS#2	MITJ	67 - 96
M5L2101AP	MITJ	29 - 97
M5L2101AP2	MITJ	29 - 74
M5L2101AS	MITJ	29 - 98
M5L2101AS2	MITJ	29 - 75
M5L2101AS4	MITJ	30 - 12
M5L2104S	MITJ	47 - 61
M5L2107BP	♦MITJ	46 - 9
M5L2107BS	♦MITJ	46 - 10
M5L2107BS-4	♦MITJ	47 - 21
M5L2111AP	MITJ	29 - 99
M5L2111AP2	MITJ	29 - 76
M5L2111AS	MITJ	29 -100
M5L2111AS2	MITJ	29 - 77
M5L2111AS4	MITJ	30 - 13
M5L2112AP	MITJ	29 -101
M5L2112AP2	MITJ	29 - 78
M5L2112AS	MITJ	29 -102
M5L2112AS2	MITJ	29 - 79
M5L2112AS4	MITJ	30 - 14
M5L2114LS	MITJ	41 - 81
M5L2708K	MITJ	73 - 22
M5L2708K65	MITJ	73 - 23
M5L2708S	MITJ	76 - 17
M5L2708S-65	MITJ	76 - 41
M5L2716K-65	♦MITJ	78 - 29
M5L2764K2	MITJ	83 - 30
M5L2764K3	MITJ	83 - 31
M5L5101P-1	MITJ	28 - 48
M74LS173P	MITJ	93 - 21
M74LS630P	MITJ	20 - 30
M120-2D1	♦SGSI	30 - 15
M120-2F1	♦SGSI	30 - 16
M120D1	♦SGSI	30 - 90
M120F1	♦SGSI	30 - 91
M120T1	♦SGSI	100 - 73
M120T8	♦SGSI	100 - 74
M121T1	♦SGSI	100 - 96
M121T8	♦SGSI	100 - 97
M122T1	♦SGSI	100 - 54
M122T8	♦SGSI	100 - 55
M124T1	♦SGSI	101 - 35
M124T8	♦SGSI	101 - 36
M125T1	♦SGSI	105 - 37
M127T1	♦SGSI	104 - 4
M129T1	♦SGSI	103 - 3
M130T1	♦SGSI	107 - 64
M134T1	♦SGSI	101 - 37
M136T1	♦SGSI	106 - 90
M137T1	♦SGSI	102 - 76
M137T2	SGSI	102 - 77
M140T1	♦SGSI	101 - 23
M140T2	♦SGSI	101 - 24
M141D1	♦SGSI	105 - 91
M200M1AA	SGSI	85 - 85
M200M1XX	SGSI	85 - 86
M203	ICC	96 - 54
M204	ICC	91 - 59
M206	ICC	95 - 86
M207	ICC	95 - 85
M210M1AA	SGSI	62 - 81

TYPE No.	MFRS	Pg&Line
M240D1A	♦SGSI	69 - 11
M240D1B	♦SGSI	69 - 7
M250D1	SGSI	109 - 80
M252B1AA	♦SGSI	109 - 84
M252B1XX	♦SGSI	109 - 82
M252D1AA	♦SGSI	109 - 85
M252D1XX	♦SGSI	109 - 83
M253B1AA	SGSI	109 - 78
M253B1XX	SGSI	109 - 76
M253D1AA	SGSI	109 - 79
M253D1XX	SGSI	109 - 77
M254B1XX	♦SGSI	109 - 81
M330AB1	♦SGSI	38 - 64
M330AD1	SGSI	38 - 65
M330BB1	SGSI	38 - 42
M330BD1	SGSI	38 - 43
M330CB1	SGSI	38 - 14
M330CD1	SGSI	38 - 15
M1403A	ITL	106 - 91
M1404A	ITL	107 - 65
M1405A	ITL	106 - 22
M2102AD1-2	♦SGSI	37 - 57
M2102AD1-4	♦SGSI	37 - 93
M2102AD1-6	♦SGSI	38 - 44
M2114-2MA	♦GTE	42 - 41
M2114-3MA	♦GTE	41 - 33
M2114-3ME	♦GTE	41 - 34
M2114-UMA	♦GTE	42 - 85
M2114-USA	GTE	42 - 86
M2114UMA	♦GTE	42 - 87
M2704D1	SGSI	70 -107
M2708-1D1	SGSI	76 - 1
M2708-4D1	SGSI	76 - 43
M2708D1	SGSI	76 - 18
M2816-4	♦ITL	80 -102
M3602	ITL	67 - 62
M3602-6	ITL	67 - 64
M3621	ITL	61 - 68
M3622	ITL	67 - 63
M3622-6	ITL	67 - 65
M4027P-2B1	♦SGSI	45 - 61
M4027P-2D1	♦SGSI	45 - 62
M4027P-2F1	♦SGSI	45 - 63
M4027P-3B1	♦SGSI	46 - 11
M4027P-3D1	♦SGSI	46 - 12
M4027P-3F1	♦SGSI	46 - 13
M4027P-4B1	♦SGSI	46 - 81
M4027P-4D1	♦SGSI	46 - 82
M4027P-4F1	♦SGSI	46 - 83
M4104UMC	♦GTE	42 - 49
M4104USC	♦GTE	42 - 42
M4116-2F1	SGSI	53 - 76
M4116-3F1	SGSI	53 -101
M4116-4F1	SGSI	54 - 30
M4116P-2B1	♦SGSI	53 - 77
M4116P-2D1	♦SGSI	53 - 78
M4116P-2F1	♦SGSI	53 - 79
M4116P-3B1	♦SGSI	53 -102
M4116P-3D1	♦SGSI	53 -103
M4116P-3F1	♦SGSI	53 -104
M4116P-4B1	♦SGSI	54 - 31
M4116P-4D1	♦SGSI	54 - 32
M4116P-4F1	♦SGSI	54 - 33
M4200-UMC	♦GTE	51 - 38
M4200-USC	GTE	51 - 27
M4200USC	♦GTE	51 - 28
M5391P	MITJ	99 - 23
M5395P	MITJ	90 - 38
M5823P	MITJ	101 - 80
M5825P	MITJ	102 - 8
M5826P	MITJ	102 - 7
M8108-3MD	GTE	43 - 59
M8108-5MD	GTE	43 - 71
M8118-3MD	GTE	43 - 60
M8118-5MD	GTE	43 - 72
M36000-4B1	SGSI	82 - 94
M36000-4D1	SGSI	82 - 95
M36000-4F1	SGSI	82 - 96
M36000-5F1	SGSI	82 - 98
M58201P	MITJ	100 - 44
M58209P	MITJ	103 - 4
M58232P	MITJ	101 - 82
M58233P	MITJ	99 -108
M58301P	MITJ	105 - 18
M58332-XXXP	MITJ	81 - 79
M58480P	MITJ	29 - 32
M58481S	MITJ	40 - 1
M58502P	♦MITJ	105 - 79
M58503P	♦MITJ	106 - 75
M58504P	♦MITJ	107 - 45
M58531P	♦MITJ	27 - 29
M58533P	♦MITJ	33 - 47
M58563S1#1	♦MITJ	65 - 6
M58563S1#2	♦MITJ	67 -101
M58563S#1	MITJ	none
Repl.by M5L1702AS#1 Obs.		
M58563S#2	MITJ	none
Repl.by M5L1702AS#2 Obs.		
M58651S	MITJ	none
Repl.by M5G2401S Obs.		
M58656S	♦MITJ	27 - 58
M58721P	MITJ	none
Repl.by M5L2101AP-4 Cur.		
M58721S	♦MITJ	30 - 17
M58722P	MITJ	none
Repl.by M5L2111AP-4 Cur.		
M58722S	♦MITJ	30 - 18
M58723P	MITJ	none
Repl.by M5L2112AP-4 Cur.		
M58723S	♦MITJ	30 - 19
M58724P	MITJ	none
Repl.by M5L2114LP Cur.		
M58724P-2	MITJ	none
Repl.by M5L2114LP-2 Cur.		

TYPE No.	MFRS	Pg&Line
M58724P-3	MITJ	none
Repl.by M5L2114LP-3 Cur.		
M58724S	MITJ	none
Repl.by M5L2114LS Obs.		
M58724S-2	MITJ	none
Repl.by M5L2114LS-2 Cur.		
M58724S-3	MITJ	none
Repl.by M5L2114LS-3 Cur.		
M58725S	MITJ	44 - 74
M58730-001S	♦MITJ	73 - 24
M58730-XXXP	♦MITJ	73 - 15
M58731-XXXS	♦MITJ	79 - 35
M58732S	MITJ	none
Repl.by M5L2708S Obs.		
M58732S-1	MITJ	none
Repl.by M5L2708S-65 Obs.		
M58733S	MITJ	78 - 40
M58733S-1	MITJ	78 - 41
M58751P2	♦MITJ	38 - 66
M58751P	MITJ	none
Repl.by M5L2102AP-4 Cur.		
M58751S	MITJ	none
Repl.by M5L2102AS-4 Cur.		
M58754P	MITJ	none
Repl.by M5T4044P-45 Cur.		
M58754P-2	MITJ	none
Repl.by M5T4044P-20 Cur.		
M58754P-3	MITJ	none
Repl.by M5T4044P-30 Cur.		
M58754S	MITJ	none
Repl.by M5T4044S-45 Cur.		
M58754S-2	MITJ	none
Repl.by M5T4044S-20 Cur.		
M58754S-3	MITJ	none
Repl.by M5T4044S-30 Cur.		
M58755P-1	MITJ	none
Repl.by M5L2107BP Obs.		
M58755S1	MITJ	none
Repl.by M5L2107BS Obs.		
M58755S2	MITJ	none
Repl.by M5L2107BS-4 Obs.		
M58755S3	♦MITJ	45 - 64
M58755S	♦MITJ	47 - 62
M58756K	♦MITJ	47 - 63
M58756S	MITJ	none
Repl.by M5L2104S Obs.		
M58759K-15	♦MITJ	53 - 80
M58759K-20	♦MITJ	53 -105
M58759K-25	♦MITJ	54 - 34
M58759K-30	♦MITJ	54 - 46
M58759P-15	MITJ	none
Repl.by M5K4116P-2 Cur.		
M58759P-20	MITJ	none
Repl.by M5K4116P-3 Cur.		
M58759P-25	MITJ	none
Repl.by M5K4116P-4 Obs.		
M58759P-30	♦MITJ	54 - 47
M58759S	♦MITJ	54 - 70
M58759S-15	MITJ	none
Repl.by M5K4116S-2 Cur.		
M58759S-20	MITJ	none
Repl.by M5K4116S-3 Cur.		
M58759S-25	MITJ	none
Repl.by M5K4116S-4 Obs.		
M58759S-30	♦MITJ	54 - 48
M58764S20	MITJ	56 - 10
M58764S-12	♦MITJ	55 -103
M58764S-15	♦MITJ	56 - 4
M58980P	MITJ	none
Repl.by M5L5101P-1 Obs.		
M58981P	♦MITJ	39 - 79
M58981S	♦MITJ	39 - 80
M58981S-30	MITJ	39 - 72
MB452	FMI	91 - 60
MB452M	FMI	91 - 61
MB453	FMI	95 - 26
MB453M	FMI	95 - 27
MB454	FMI	100 - 15
MB454M	FMI	100 - 16
MB455	FMI	96 - 96
MB455M	FMI	96 - 97
MB460	FMI	20 - 31
MB460M	FMI	20 - 32
MB2128-15#ai	ITL	44 - 22
MB2128-20#ai	ITL	44 - 26
MB2141-4	ITL	52 - 9
MB2141-5	ITL	52 - 27
MB2164-15	ITL	56 - 29
MB2164-20	ITL	56 - 40
MB2164-25	ITL	56 - 52
MB2167-10	ITL	55 - 58
MB2167-55	ITL	55 - 34
MB2167-70	ITL	55 - 47
MB2167L70	ITL	55 - 48
MB2186	ITL	53 - 1
MB2716	ITL	80 - 62
MB7041	FMI	24 - 48
MB7042	♦FMI	24 - 53
MB7042H	♦FMI	24 - 52
MB7044	FMI	24 - 66
MB7046	♦FMI	34 - 5
MB7046H	♦FMI	33 -110
MB7046N	♦FMI	34 - 10
MB7047	♦FMI	24 - 1
MB7051	FMI	58 - 43
MB7051C	FMI	58 - 44
MB7052	FMI	62 - 8
MB7052P	FMI	62 - 9
MB7052Z	FMI	62 - 10
MB7053	FMI	67 - 92
MB7053P	FMI	67 - 49
MB7053Z	FMI	67 - 36
MB7054	FMI	72 -100
MB7054C	♦FMI	72 -101

♦-Mfr's data sheet available in microfilm service

Cur-In current D.A.T.A.BOOK
Δ-Registered with JEDEC by this manufacturer

Obs-In this book

1. TYPE No. CROSS INDEX

IN TYPE NUMBER SEQUENCE

TYPE No.	MFRS	Pg&Line
MB7055	♦FMI	75 - 96
MB7055C	♦FMI	75 - 94
MB7056	FMI	58 - 45
MB7056C	FMI	58 - 46
MB7057	FMI	62 - 11
MB7057P	FMI	62 - 12
MB7057Z	FMI	62 - 13
MB7058	FMI	67 - 93
MB7058P	FMI	67 - 50
MB7058Z	FMI	67 - 37
MB7059	FMI	72 -102
MB7059C	FMI	72 -103
MB7060	♦FMI	75 - 97
MB7060C	FMI	75 - 95
MB7061	♦FMI	34 - 77
MB7061H	♦FMI	34 - 61
MB7063	♦FMI	23 - 78
MB7067	FMI	39 - 42
MB7071E	♦FMI	27 - 79
MB7071H	♦FMI	27 - 78
MB7071N	♦FMI	27 - 83
MB7077	♦FMI	39 - 41
MB7130EC	♦FMI	75 - 20
MB7130HC	♦FMI	74 -105
MB7131EC	FMI	75 - 21
MB7131HC	FMI	74 -106
MB7136E	♦FMI	80 - 30
MB7136ET	FMI	80 - 55
MB7136H	♦FMI	79 -108
MB7136HT	FMI	80 - 54
MB7142NC	FMI	82 - 38
MB8101E	♦FMI	29 - 80
MB8101N	♦FMI	30 - 20
MB8102	FMI	37 - 94
MB8103	FMI	33 - 48
MB8105	FMI	46 - 14
MB8107	♦FMI	46 - 15
MB8107E	♦FMI	46 - 84
MB8107H	♦FMI	46 - 16
MB8107N	♦FMI	47 - 64
MB8107Y	♦FMI	45 - 65
MB8111E	♦FMI	29 - 81
MB8111N	♦FMI	30 - 21
MB8112E	♦FMI	29 - 82
MB8112N	♦FMI	30 - 22
MB8114E	♦FMI	40 - 60
MB8114EL	♦FMI	40 - 61
MB8114H	♦FMI	40 - 36
MB8114N	♦FMI	41 - 35
MB8114NL	♦FMI	41 - 36
MB8115E	♦FMI	37 - 38
MB8115H	♦FMI	37 - 4
MB8115N	♦FMI	37 - 49
MB8115Y	♦FMI	36 - 86
MB8116EC	♦FMI	54 - 71
MB8116HC	♦FMI	54 - 60
MB8116N	FMI	54 - 35
MB8116NC	♦FMI	54 - 83
MB8116NP	♦FMI	54 - 84
MB8116NZ	♦FMI	54 - 85
MB8116Y	FMI	53 - 58
MB8117-15P	♦FMI	53 - 59
MB8117-15Z	FMI	53 - 81
MB8125E	♦FMI	37 - 39
MB8125H	♦FMI	37 - 5
MB8125N	♦FMI	37 - 50
MB8125Y	♦FMI	36 - 87
MB8128-10C#ai		44 - 68
	♦FMI	
MB8132EH	♦FMI	55 - 70
MB8132EL	♦FMI	55 - 71
MB8132HH	FMI	55 - 66
MB8132HL	FMI	55 - 67
MB8132NH	FMI	55 - 84
MB8132NL	FMI	55 - 85
MB8164E	FMI	56 - 11
MB8164H	FMI	56 - 1
MB8164N	FMI	56 - 17
MB8167	FMI	55 - 18
MB8168-90Z#ai	FMI	52 - 44
MB8201	FMI	32 - 90
MB8201H	FMI	32 - 91
MB8201N	FMI	32 - 96
MB8202	FMI	43 - 91
MB8214	♦FMI	46 - 48
MB8214E	♦FMI	47 - 32
MB8214H	♦FMI	46 - 49
MB8214N	♦FMI	47 - 96
MB8215	♦FMI	45 - 38
MB8215E	♦FMI	45 - 39
MB8216	FMI	52 - 79
MB8216E#ai	♦FMI	53 - 60
MB8216EC	♦FMI	53 - 61
MB8216N#ai	♦FMI	53 - 66
MB8224E	FMI	46 - 50
MB8224N	FMI	47 - 33
MB8227E	FMI	46 - 17
MB8227H	FMI	45 - 66
MB8227N	FMI	46 - 85
MB8264-15E	FMI	56 - 5
MB8264-20N	FMI	56 - 12
MB8308E	FMI	74 - 23
MB8308N	FMI	74 - 42
MB8364A	FMI	83 - 45
MB8364M	FMI	83 - 46
MB8401E	FMI	36 - 29
MB8401H	♦FMI	36 - 25
MB8401N	♦FMI	36 - 39
MB8404E	FMI	49 - 1
MB8404EC	♦FMI	49 - 2
MB8404EP	♦FMI	49 - 3
MB8411E	♦FMI	36 - 30
MB8411H	♦FMI	36 - 26
MB8411N	♦FMI	36 - 40

TYPE No.	MFRS	Pg&Line
MB8414E	FMI	39 - 67
MB8414EC	FMI	39 - 68
MB8414EP	FMI	39 - 69
MB8416-15Z	FMI	44 - 38
MB8416-20Z	FMI	44 - 48
MB8416-25P	FMI	44 - 56
MB8416-25Z	FMI	44 - 57
MB8416A12Z#ai		44 - 31
	♦FMI	
MB8416A15Z#ai		44 - 39
	♦FMI	
MB8417-15P	FMI	44 - 40
MB8417-15Z	FMI	44 - 41
MB8417-20Z	FMI	44 - 49
MB8417-25P	FMI	44 - 58
MB8417-25Z	FMI	44 - 59
MB8417A12P#ai		44 - 32
	♦FMI	
MB8417A12Z#ai		44 - 33
	♦FMI	
MB8417A15P#ai		44 - 42
	♦FMI	
MB8417A15Z#ai		44 - 43
	♦FMI	
MB8417XZ	♦FMI	44 - 75
MB8418	♦FMI	44 - 50
MB8418-20Z	FMI	44 - 51
MB8418-25P	FMI	44 - 60
MB8418-25Z	FMI	44 - 61
MB8418A12P#ai		44 - 34
	♦FMI	
MB8418A12Z#ai		44 - 35
	♦FMI	
MB8418A15P#ai		44 - 44
	♦FMI	
MB8418A15Z#ai		44 - 45
	♦FMI	
MB8503	FMI	64 -103
MB8513	FMI	64 -104
MB8518	♦FMI	76 - 19
MB8518E	♦FMI	76 - 42
MB8518H	♦FMI	76 - 20
MB10141	FMI	94 - 25
MB10141M	FMI	94 - 26
MB10145	FMI	21 - 29
MB84015	FMI	94 - 93
MB84015M	FMI	94 - 87
MB84021	FMI	97 - 94
MB84021M	FMI	97 - 77
MB84035	FMI	90 - 89
MB84035M	FMI	90 - 72
MBC5101L4	AMI	27 - 65
MBC6508A	AMI	36 - 27
MBC6831B	AMI	78 - 52
MBM27C32-25Z#ai		82 - 39
	FMI	
MBM27C32-30Z#ai		82 - 40
	FMI	
MBM27C256-30CV		83 - 69
	none	
MBM27C256-45CV		83 - 70
	none	
MBM27C256-45Z	none	83 - 71
MBM2114A10LP	FMI	40 - 33
MBM2114A15LP	FMI	40 - 37
MBM2114A20LP	FMI	40 - 62
MBM2114A20P	FMI	40 - 63
MBM2115E	♦FMI	37 - 40
MBM2115H	♦FMI	37 - 6
MBM2115N	♦FMI	37 - 51
MBM2115Y	♦FMI	36 - 88
MBM2125E	♦FMI	37 - 41
MBM2125H	♦FMI	37 - 7
MBM2125N	♦FMI	37 - 52
MBM2125Y	♦FMI	36 - 89
MBM2147E	♦FMI	50 -103
MBM2147F35Z	FMI	49 - 26
MBM2147F45Z	FMI	49 - 31
MBM2147H35C	♦FMI	49 - 27
MBM2147H35F	♦FMI	49 - 28
MBM2147H45C	♦FMI	49 - 32
MBM2147H45F	♦FMI	49 - 33
MBM2147N	♦FMI	51 - 2
MBM2148-55#ai		40 - 13
	♦FMI	
MBM2148-55Z	FMI	40 - 14
MBM2148-70#ai	FMI	40 - 20
MBM2148-70Z	FMI	40 - 21
MBM2149-55Z#ai		40 - 15
	♦FMI	
MBM2716C	FMI	80 - 64
MBM2716HC	FMI	80 - 65
MBM2732	FMI	82 - 52
MBM4044E	♦FMI	49 - 93
MBM4044H	♦FMI	49 - 82
MBM4044N	♦FMI	50 - 37
MBM6504	FMI	49 - 22
MBM6514	FMI	40 - 2
MBM10410	FMI	24 - 67
MBM10415	FMI	34 - 11
MBM10415AC	♦FMI	34 - 6
MBM10422A7C#ai		27 - 75
	FMI	
MBM10470-20	FMI	48 - 94
MBM10474A15C#ai		39 - 36
	FMI	
MBM10480	FMI	53 - 34
MBM93415A	♦FMI	34 - 78
MBM93415AH	♦FMI	34 - 62
MBM100422TF	FMI	27 - 99
MBM100470C	FMI	48 - 91
MBM100470CF	FMI	48 - 92
MBM100474-15C#ai		39 - 37
	FMI	

TYPE No.	MFRS	Pg&Line
MBM100474-15CF#ai		
	FMI	39 - 38
MBM100474-20C#ai		39 - 39
	FMI	
MBM100474-20CF#ai		
	FMI	39 - 40
MC68A29L#ai	MOTA	110 - 6
MC68A29P#ai	MOTA	110 - 7
MC68B29L#ai	MOTA	110 - 8
MC68B29P#ai	MOTA	110 - 9
MC794P	♦MOTA	94 - 30
MC894P	♦MOTA	90 - 65
MC1036F	♦MOTA	20 - 69
MC1036P	♦MOTA	20 - 70
MC1037F	♦MOTA	20 - 71
MC1037P	♦MOTA	20 - 72
MC1141G	♦MOTA	102 -110
MC1142G	♦MOTA	105 - 1
MC1160G	♦MOTA	104 - 15
MC1161G	♦MOTA	102 - 5
MC1182L	♦MOTA	63 - 87
MC1236L	♦MOTA	20 - 73
MC1237L	♦MOTA	20 - 74
MC1680L	♦MOTA	20 - 1
MC1680S	♦MOTA	20 - 2
MC1681L	♦MOTA	20 - 3
MC1681S	♦MOTA	20 - 4
MC1694L	♦MOTA	94 - 58
MC1695L	MOTA	94 - 59
MC1702A	ITL	63 - 92
MC2102A4	ITL	32 - 74
MC2102A6	ITL	32 - 75
MC2118-10	ITL	54 -107
MC2118-12	ITL	55 - 4
MC2118-15	ITL	55 - 11
MC2128-15#ai	ITL	44 - 23
MC2128-20#ai	ITL	44 - 27
MC2164-15#ai	ITL	56 - 30
MC2164-20#ai	ITL	56 - 41
MC2360G	♦MOTA	104 - 23
MC2361G	♦MOTA	104 - 62
MC2362G	♦MOTA	105 - 15
MC2363G	♦MOTA	105 - 16
MC2380G	♦MOTA	103 - 66
MC2381G	♦MOTA	103 - 67
MC2708	ITL	76 - 21
MC4005F	MOTA	21 - 1
MC5101-4	ITL	28 -103
MC5101L-4	ITL	28 -104
MC5484L	MOTA	21 - 2
MC5491AL	♦MOTA	99 - 51
MC5494L	MOTA	94 - 33
MC5495F	MOTA	93 - 67
MC5495L	MOTA	93 - 68
MC5496L	MOTA	95 - 28
MC6565L	♦MOTA	103 - 29
MC6829L#ai	MOTA	110 - 10
MC6829P#ai	MOTA	110 - 11
MC7072NC	FMI	27 - 84
MC7270L	MOTA	92 - 47
MC7270P	MOTA	92 - 48
MC7271L	MOTA	92 - 49
MC7271P	MOTA	92 - 50
MC7484L	MOTA	21 - 3
MC7484P	MOTA	21 - 4
MC7491AL	♦MOTA	99 - 52
MC7491AP	♦MOTA	99 - 53
MC7494L	MOTA	94 - 34
MC7494P	MOTA	94 - 35
MC7495F	MOTA	93 - 69
MC7495L	MOTA	93 - 70
MC7495P	MOTA	93 - 71
MC7496L	MOTA	91 - 62
MC7496P	MOTA	95 - 29
MC8270L	MOTA	92 - 51
MC8271L	MOTA	92 - 52
MC8300L	MOTA	92 - 69
MC8300P	MOTA	92 - 70
MC8328L	MOTA	99 - 89
MC8328P	MOTA	99 - 90
MC8391F	♦MOTA	99 - 54
MC8391L	♦MOTA	99 - 55
MC8391P	♦MOTA	99 - 56
MC8394L	MOTA	94 - 36
MC8394P	MOTA	94 - 37
MC8396L	MOTA	95 - 30
MC8396P	MOTA	95 - 31
MC9300L	MOTA	92 - 71
MC9328L	MOTA	99 - 91
MC9391F	♦MOTA	99 - 57
MC9391L	♦MOTA	99 - 58
MC9394L	MOTA	94 - 38
MC9396L	MOTA	95 - 32
MC10139P	♦MOTA	57 - 75
MC10176L	♦MOTA	96 - 42
MC10176P	♦MOTA	96 - 43
MC10186L	MOTA	96 - 44
MC14006AL	MOTA	95 - 60
MC14006CL	MOTA	95 - 58
MC14006CP	MOTA	95 - 59
MC14014AL	MOTA	99 - 27
MC14014CL	MOTA	99 - 25
MC14014CP	MOTA	99 - 26
MC14015AL	MOTA	94 - 94
MC14015CL	MOTA	94 -105
MC14015CP	MOTA	94 -106
MC14015L	MOTA	94 - 95
MC14021AL	♦MOTA	97 - 66
MC14021CL	♦MOTA	97 - 63
MC14021CP	♦MOTA	97 - 64
MC14034AL	♦MOTA	96 - 63
MC14034CL	♦MOTA	96 - 64
MC14035AL	♦MOTA	90 - 68
MC14035CL	♦MOTA	90 - 66

TYPE No.	MFRS	Pg&Line
MC14035CP	♦MOTA	90 - 67
MC14076AL	MOTA	91 - 32
MC14076CL	MOTA	90 - 90
MC14076CP	MOTA	90 - 91
MC14517AL	MOTA	102 - 75
MC14517CL	MOTA	102 - 71
MC14517CP	MOTA	102 - 72
MC14549AL	MOTA	99 - 28
MC14549CL	MOTA	99 - 29
MC14549CP	MOTA	99 - 30
MC14557AL	MOTA	102 - 41
MC14557CL	MOTA	102 - 35
MC14557CP	MOTA	102 - 36
MC14559AL	MOTA	99 - 31
MC14559CL	MOTA	99 - 32
MC14559CP	MOTA	99 - 33
MC14562AL	MOTA	104 - 35
MC14562CL	MOTA	104 - 36
MC14562CP	MOTA	104 - 37
MC14580AL	MOTA	20 - 7
MC14580CL	MOTA	20 - 8
MC14580CP	MOTA	20 - 9
MC29100LC	MOTA	109 - 45
MC29100LM	MOTA	109 - 46
MC29101LC	MOTA	109 - 47
MC29101LM	MOTA	109 - 48
MC54164AF	♦MOTA	98 - 92
MC54164AL	♦MOTA	98 - 93
MC54165F	MOTA	98 - 35
MC54165L	MOTA	98 - 36
MC54195L	MOTA	93 - 43
MC74164AF	♦MOTA	98 - 94
MC74164AL	♦MOTA	98 - 95
MC74164AP	♦MOTA	98 - 96
MC74165F	MOTA	98 - 37
MC74165L	MOTA	98 - 38
MC74165P	MOTA	98 - 39
MC74195L	MOTA	93 - 44
MC74195P	MOTA	93 - 45
MC82100LC	MOTA	109 - 49
MC82100LM	MOTA	109 - 50
MC82101LC	MOTA	109 - 51
MC82101LM	MOTA	109 - 52
MCM21L14-20L	MOTA	40 - 64
MCM21L14-20P	MOTA	40 - 65
MCM21L14-25L	MOTA	40 - 96
MCM21L14-25P	MOTA	40 - 97
MCM21L14-30L	MOTA	41 - 37
MCM21L14-30P	MOTA	41 - 38
MCM21L14-45L	MOTA	41 - 82
MCM21L14-45P	MOTA	41 - 83
MCM21L15AC-45	MOTA	36 - 90
MCM21L15AC-70	MOTA	37 - 8
MCM21L25AC-45	MOTA	36 - 91
MCM21L25AC-70	MOTA	37 - 9
MCM25A32C	MOTA	82 - 43
MCM25A32L	MOTA	82 - 44
MCM25L32-25C	MOTA	82 - 41
MCM25L32-25L	MOTA	82 - 42
MCM25L32-35C	MOTA	82 - 45
MCM25L32-35L	MOTA	82 - 46
MCM25L32C	MOTA	82 - 53
MCM25L32L	MOTA	82 - 54
MCM27A16C	MOTA	78 - 48
MCM27A16L	MOTA	78 - 49
MCM27L16-25C	MOTA	80 - 66
MCM27L16-35C	MOTA	80 - 73
MCM27L16-35L	MOTA	80 - 74
MCM27L16C	MOTA	80 - 83
MCM27L16L	MOTA	80 - 84
MCM66L41-20C	♦MOTA	49 - 94
MCM66L41-20JL		49 - 95
	♦MOTA	
MCM66L41-20NL		49 - 96
	♦MOTA	
MCM66L41-20P	♦MOTA	49 - 97
MCM66L41-25C	♦MOTA	50 - 10
MCM66L41-25JL		50 - 11
	♦MOTA	
MCM66L41-25NL		50 - 12
	♦MOTA	
MCM66L41-25P	♦MOTA	50 - 13
MCM66L41-30C	♦MOTA	50 - 38
MCM66L41-30JL		50 - 39
	♦MOTA	
MCM66L41-30NL		50 - 40
	♦MOTA	
MCM66L41-30P	♦MOTA	50 - 41
MCM66L41-45C	♦MOTA	50 - 53
MCM66L41-45JL		50 - 54
	♦MOTA	
MCM66L41-45NL		50 - 55
	♦MOTA	
MCM66L41-45P	♦MOTA	50 - 56
MCM68A308L	♦MOTA	74 - 30
MCM68A332C	♦MOTA	81 -102
MCM68A332P	♦MOTA	81 -103
MCM68A364C	♦MOTA	83 - 8
MCM68A364L	MOTA	83 - 9
MCM68A364P	MOTA	83 - 10
MCM68A764C	MOTA	83 - 32
MCM68A764L	MOTA	83 - 33
MCM68B10L	♦MOTA	24 - 22
MCM68B10P	♦MOTA	24 - 23
MCM68B10S	♦MOTA	24 - 21
MCM68B30AC	MOTA	74 - 24
MCM68B30AP	MOTA	74 - 25
MCM68B308C	MOTA	74 - 26
MCM68B308L	MOTA	74 - 27
MCM68B308P	MOTA	74 - 28
MCM68B364C	MOTA	82 -101
MCM68B364L	MOTA	83 - 1
MCM68B364P	MOTA	83 - 2
MCM68L732C	MOTA	82 - 55

TYPE No.	MFRS	Pg&Line
MCM68L732C35	MOTA	82 - 47
MCM68L732L	MOTA	82 - 56
MCM68L732L35	MOTA	82 - 48
MCM68L764-35C	MOTA	83 - 34
MCM68L764-35L	MOTA	83 - 35
MCM0464L50	MOTA	110 - 21
MCM0464L60	MOTA	110 - 22
MCM0464L70	MOTA	110 - 23
MCM1110LA#1	♦MOTA	63 - 64
MCM1110LA#2	♦MOTA	66 - 54
MCM1110LB	♦MOTA	66 - 55
MCM1110LC	♦MOTA	63 - 65
MCM1111L	♦MOTA	88 - 86
MCM1112L	♦MOTA	88 - 87
MCM1120L	♦MOTA	86 - 6
MCM1121L	♦MOTA	84 -104
MCM1122L	♦MOTA	84 -105
MCM1130L#1	♦MOTA	84 - 36
MCM1130L#2	♦MOTA	84 - 22
MCM1131L	♦MOTA	84 - 37
MCM1132L	♦MOTA	84 - 38
MCM1140L#1	MOTA	69 - 25
MCM1140L#2	MOTA	71 - 85
MCM1141L	MOTA	71 - 9
MCM1150LA#1	♦MOTA	65 - 34
MCM1150LA#2	♦MOTA	68 - 20
MCM1150LB	♦MOTA	68 - 21
MCM1150LC	♦MOTA	65 - 35
MCM1151L#1	♦MOTA	87 - 62
MCM1151L#2	♦MOTA	88 - 38
MCM1170L	♦MOTA	22 - 87
MCM1172L	♦MOTA	39 - 10
MCM1173L	♦MOTA	39 - 11
MCM1175L	♦MOTA	39 - 9
MCM2102L1	♦MOTA	38 - 16
MCM2102L2	♦MOTA	38 - 45
MCM2102L	♦MOTA	38 - 67
MCM2102P1	♦MOTA	38 - 17
MCM2102P2	♦MOTA	38 - 46
MCM2102P	♦MOTA	38 - 68
MCM2114L	♦MOTA	41 - 84
MCM2114P	♦MOTA	41 - 85
MCM2115AC-45	♦MOTA	36 - 92
MCM2115AC-55	♦MOTA	36 -102
MCM2115AC-70	♦MOTA	37 - 10
MCM2115AL	♦MOTA	36 - 78
MCM2125AC-45	♦MOTA	36 - 93
MCM2125AC-55	♦MOTA	36 -103
MCM2125AC-70	♦MOTA	37 - 11
MCM2125AL	MOTA	36 - 79
MCM2147P55	MOTA	49 - 37
MCM2147P70	MOTA	49 - 45
MCM2147P85	MOTA	49 - 63
MCM2147P100	MOTA	49 - 73
MCM2148C70	MOTA	49 - 46
MCM2148C85	MOTA	49 - 64
MCM2148HC70	MOTA	49 - 47
MCM2148HL70	MOTA	49 - 48
MCM2148L70	MOTA	49 - 49
MCM2148L85	MOTA	49 - 65
MCM2532L	MOTA	82 - 57
MCM2708P	♦MOTA	76 - 22
MCM2716L	♦MOTA	80 - 85
MCM2717L	MOTA	80 - 86
MCM2801	♦MOTA	57 - 20
MCM2832-15L	MOTA	81 - 83
MCM2832-15P	MOTA	81 - 84
MCM2832-20L	MOTA	81 - 85
MCM2832-20P	MOTA	81 - 86
MCM4000L	♦MOTA	57 - 17
MCM4000P	♦MOTA	57 - 18
MCM4002L	♦MOTA	57 - 64
MCM4002P	♦MOTA	57 - 65
MCM4003AL	♦MOTA	58 - 83
MCM4004AL	♦MOTA	60 - 39
MCM4004L	♦MOTA	60 - 31
MCM4006AL	♦MOTA	60 - 12
MCM4027AC1	MOTA	45 - 40
MCM4027AL1	MOTA	45 - 41
MCM4027AL2	MOTA	45 - 67
MCM4027AL3	MOTA	46 - 18
MCM4027AL4	MOTA	46 - 86
MCM4027C2	MOTA	45 - 68
MCM4027C3	MOTA	46 - 19
MCM4027C4	MOTA	46 - 87
MCM4027L2	MOTA	45 - 69
MCM4027L3	MOTA	46 - 20
MCM4027L4	MOTA	46 - 88
MCM4027P3	MOTA	46 - 21
MCM4027P4	MOTA	46 - 89
MCM4064AL	♦MOTA	22 - 41
MCM4064L	♦MOTA	21 - 95
MCM4067AL%	♦MOTA	88 - 75
MCM4067L%	♦MOTA	88 - 76
MCM4068AL%	♦MOTA	88 - 77
MCM4068L%	♦MOTA	88 - 78
MCM4069AL%	♦MOTA	88 - 88
MCM4070AL%	♦MOTA	88 - 89
MCM4096C6	MOTA	46 - 90
MCM4096C11	MOTA	48 - 9
MCM4096C16	♦MOTA	47 - 65
MCM4096L6	MOTA	46 - 91
MCM4096L11	MOTA	48 - 10
MCM4096L16	MOTA	47 - 66
MCM4116AC15	♦MOTA	54 - 61
MCM4116AC20	♦MOTA	54 - 72
MCM4116AC25	♦MOTA	54 - 86
MCM4116AC30	♦MOTA	54 - 97
MCM4116AL15	MOTA	54 - 62
MCM4116AL20	MOTA	54 - 73
MCM4116AL25	MOTA	54 - 87
MCM4116AL30	MOTA	54 - 98
MCM4116C15	MOTA	54 - 63
MCM4116C20	MOTA	54 - 74

♦-Mfr's data sheet available in microfilm service

Cur-In current D.A.T.A.BOOK
Δ-Registered with JEDEC by this manufacturer

Obs-In this book

1. TYPE No. CROSS INDEX

IN TYPE NUMBER SEQUENCE

TYPE No.	MFRS	Pg&Line
MCM4116C25	MOTA	54 - 88
MCM4116C30	MOTA	54 - 99
MCM4116L15	MOTA	54 - 64
MCM4116L20	MOTA	54 - 75
MCM4116L25	MOTA	54 - 89
MCM4116L30	MOTA	54 -100
MCM4117L15	MOTA	53 - 82
MCM4117L20	MOTA	53 -106
MCM4117L25	MOTA	54 - 36
MCM4117L30	MOTA	54 - 49
MCM4132L15	MOTA	55 - 72
MCM4132L20	MOTA	55 - 86
MCM4132L25	MOTA	55 - 98
MCM4132L30	MOTA	55 -100
MCM4300L	♦MOTA	57 - 19
MCM4303AL	♦MOTA	58 - 84
MCM4304L	♦MOTA	60 - 40
MCM4364L	MOTA	21 - 96
MCM4516C	MOTA	53 - 62
MCM4516L	MOTA	53 - 63
MCM4517-10C	MOTA	53 - 54
MCM4517-10P	MOTA	53 - 55
MCM4517-12C	MOTA	53 - 64
MCM4517-15C	MOTA	53 - 83
MCM5003AL	MOTA	58 - 90
MCM5003L	MOTA	58 - 91
MCM5004AL	MOTA	58 - 92
MCM5004L	MOTA	58 - 93
MCM5303AL	MOTA	58 - 94
MCM5303L	MOTA	58 - 95
MCM5304AL	MOTA	58 - 96
MCM5304L	MOTA	58 - 97
MCM6508C-25	MOTA	34 - 97
MCM6508C-30	MOTA	34 - 99
MCM6508C-46	MOTA	34 -103
MCM6508P-25	MOTA	34 - 98
MCM6508P-30	MOTA	34 -102
MCM6508P-46	MOTA	34 -104
MCM6518C-25	MOTA	34 - 95
MCM6518C-30	MOTA	34 -100
MCM6518P-25	MOTA	34 - 96
MCM6518P-30	MOTA	34 -101
MCM6518P-46	MOTA	34 -105
MCM6550L	♦MOTA	109 - 86
MCM6550P	♦MOTA	109 - 87
MCM6560L#1	MOTA	74 - 50
MCM6560L#2	MOTA	77 - 33
MCM6560P#1	MOTA	74 - 51
MCM6560P#2	MOTA	77 - 34
MCM6561L#1	MOTA	88 - 31
MCM6561L#2	MOTA	87 - 55
MCM6561L#3	MOTA	88 - 93
MCM6561L#4	MOTA	87 - 76
MCM6561L#5	MOTA	87 -104
MCM6561L#6	MOTA	87 - 17
MCM6561P#1	MOTA	88 - 32
MCM6561P#2	MOTA	87 - 56
MCM6561P#3	MOTA	88 - 94
MCM6561P#4	MOTA	87 - 77
MCM6561P#5	MOTA	87 -105
MCM6561P#6	MOTA	87 - 18
MCM6562L#1	MOTA	88 - 33
MCM6562L#2	MOTA	87 - 57
MCM6562L#3	MOTA	88 - 95
MCM6562L#4	MOTA	87 - 78
MCM6562L#5	MOTA	87 -106
MCM6562L#6	MOTA	87 - 19
MCM6562P#1	MOTA	88 - 34
MCM6562P#2	MOTA	87 - 58
MCM6562P#3	MOTA	88 - 96
MCM6562P#4	MOTA	87 - 79
MCM6562P#5	MOTA	87 -107
MCM6562P#6	MOTA	87 - 20
MCM6570L	♦MOTA	86 - 28
MCM6570P	♦MOTA	86 - 29
MCM6571AL	♦MOTA	85 - 59
MCM6571AP	♦MOTA	85 - 60
MCM6571L	♦MOTA	85 - 61
MCM6571P	♦MOTA	85 - 62
MCM6572L	♦MOTA	85 - 63
MCM6572P	♦MOTA	85 - 64
MCM6573L	♦MOTA	85 - 65
MCM6573P	♦MOTA	85 - 66
MCM6574L	♦MOTA	85 - 67
MCM6574P	♦MOTA	85 - 68
MCM6575L	♦MOTA	85 - 69
MCM6575P	♦MOTA	85 - 70
MCM6576L	♦MOTA	85 - 71
MCM6576P	♦MOTA	85 - 72
MCM6577L	♦MOTA	85 - 73
MCM6577P	♦MOTA	85 - 74
MCM6578L	♦MOTA	85 - 75
MCM6578P	♦MOTA	85 - 76
MCM6579L	♦MOTA	85 - 77
MCM6579P	♦MOTA	85 - 78
MCM6580L	MOTA	86 - 2
MCM6580P	MOTA	86 - 3
MCM6581L	MOTA	84 - 74
MCM6581P	MOTA	84 - 75
MCM6583L	MOTA	84 - 76
MCM6583P	MOTA	84 - 77
MCM6590L	MOTA	79 - 69
MCM6591L#1	MOTA	87 - 52
MCM6591L#2	MOTA	88 - 28
MCM6591L#3	MOTA	87 - 9
MCM6591L#4	MOTA	87 - 72
MCM6591L#5	MOTA	87 - 86
MCM6591L#6	MOTA	88 - 81
MCM6604AC2	MOTA	46 - 92
MCM6604AC4	MOTA	47 - 67
MCM6604AC	MOTA	48 - 11
MCM6604AL2	MOTA	46 - 93
MCM6604AL4	MOTA	47 - 68
MCM6604AL	MOTA	48 - 12

TYPE No.	MFRS	Pg&Line
MCM6604L2	MOTA	45 - 31
MCM6604L4	MOTA	45 - 32
MCM6604L	MOTA	45 - 33
MCM6604P2	MOTA	45 - 34
MCM6604P4	MOTA	45 - 35
MCM6604P	MOTA	45 - 36
MCM6605AL1	MOTA	45 - 70
MCM6605AL2	MOTA	46 - 22
MCM6605AL	MOTA	47 - 69
MCM6605AP1	MOTA	45 - 71
MCM6605AP2	MOTA	46 - 23
MCM6605AP	MOTA	47 - 70
MCM6616L3	MOTA	53 - 42
MCM6616L4	MOTA	53 - 43
MCM6616L5	MOTA	53 - 44
MCM6616L20	MOTA	54 - 76
MCM6616L25	MOTA	54 - 90
MCM6616L30	MOTA	54 -101
MCM6616P3	MOTA	53 - 45
MCM6616P4	MOTA	53 - 46
MCM6616P5	MOTA	53 - 47
MCM6616P20	MOTA	54 - 77
MCM6616P25	MOTA	54 - 91
MCM6616P30	MOTA	54 -102
MCM6630L15	MOTA	55 - 73
MCM6630L20	MOTA	55 - 87
MCM6631L15	MOTA	55 - 74
MCM6631L20	MOTA	55 - 88
MCM6632-15L	♦MOTA	55 - 75
MCM6632-20L	♦MOTA	55 - 89
MCM6632AL15	MOTA	55 - 76
MCM6632AL20	MOTA	55 - 90
MCM6632AP12	MOTA	55 - 68
MCM6633AL15	MOTA	55 - 77
MCM6633AL20	MOTA	55 - 91
MCM6633AP12	MOTA	55 - 69
MCM6633L15	MOTA	55 - 78
MCM6633L20	MOTA	55 - 92
MCM6641-20C	MOTA	49 - 98
MCM6641-20JL	MOTA	49 - 99
MCM6641-20NL	MOTA	49 -100
MCM6641-20P	♦MOTA	49 -101
MCM6641-25C	MOTA	50 - 14
MCM6641-25JL	MOTA	50 - 15
MCM6641-25NL	MOTA	50 - 16
MCM6641-25P	♦MOTA	50 - 17
MCM6641-30C	MOTA	50 - 42
MCM6641-30JL	MOTA	50 - 43
MCM6641-30NL	MOTA	50 - 44
MCM6641-30P	♦MOTA	50 - 45
MCM6641-45C	MOTA	50 - 57
MCM6641-45JL	MOTA	50 - 58
MCM6641-45NL	MOTA	50 - 59
MCM6641-45P	♦MOTA	50 - 60
MCM6664-15C	MOTA	55 -107
MCM6664-15L	♦MOTA	55 -108
MCM6664-20C	MOTA	55 -109
MCM6664-20L	♦MOTA	55 -110
MCM6664A-12L#ai		52 -100
	♦MOTA	
MCM6664A-12P#ai		52 -101
	♦MOTA	
MCM6665-15L	MOTA	56 - 6
MCM6665-20L	♦MOTA	56 - 13
MCM6665L25	MOTA	56 - 18
MCM6665L25-5L		56 - 19
	♦MOTA	
MCM6674L	MOTA	85 - 37
MCM6810ACL1	MOTA	24 - 14
MCM6810ACL	MOTA	24 - 15
MCM6810AL1	MOTA	24 - 16
MCM6810AL	MOTA	24 - 17
MCM6810AP1	MOTA	24 - 18
MCM6810AP	MOTA	24 - 19
MCM6810BJCS	MOTA	24 - 28
MCM6810CJCS	MOTA	24 - 20
MCM6830AL	MOTA	74 - 45
MCM6832C	♦MOTA	79 - 64
MCM6832P	♦MOTA	79 - 65
MCM7001L1	♦MOTA	36 - 67
MCM7001L	♦MOTA	36 - 65
MCM7620DC	MOTA	67 - 51
MCM7620DM	MOTA	67 - 55
MCM7620LDC	MOTA	66 - 79
MCM7620LDM	MOTA	66 - 81
MCM7621DM	MOTA	67 - 56
MCM7621LDC	MOTA	66 - 80
MCM7621LDM	MOTA	66 - 82
MCM7640D	MOTA	70 - 41
MCM7640DC	MOTA	70 - 42
MCM7640DM	MOTA	70 - 56
MCM7640L	MOTA	69 - 98
MCM7640P	MOTA	69 - 99
MCM7641D	MOTA	70 - 43
MCM7641DM	MOTA	70 - 57
MCM7641L	MOTA	69 -100
MCM7641P	MOTA	69 -101
MCM7642D	MOTA	72 - 79
MCM7642DC	MOTA	72 - 80
MCM7642DM	MOTA	72 - 98
MCM7642L	♦MOTA	72 - 14
MCM7642P	MOTA	72 - 15
MCM7643D	MOTA	72 - 81
MCM7643DM	MOTA	72 - 99
MCM7643L	MOTA	72 - 16
MCM7643P	MOTA	72 - 17
MCM7660L	MOTA	74 - 96
MCM7660P	MOTA	74 - 97
MCM7661L	MOTA	74 - 98
MCM7680CDC	MOTA	73 - 25
MCM7680CDM	MOTA	73 - 26
MCM7680DC	MOTA	75 - 32
MCM7680DCL	MOTA	73 - 52
MCM7680DM	MOTA	75 - 40

TYPE No.	MFRS	Pg&Line
MCM7680DML	MOTA	73 - 62
MCM7680LDC	MOTA	75 - 79
MCM7680LDM	MOTA	75 - 82
MCM7681CDC	MOTA	73 - 27
MCM7681CDM	MOTA	73 - 28
MCM7681DCL	MOTA	73 - 53
MCM7681DM	MOTA	75 - 41
MCM7681DML	MOTA	73 - 63
MCM7681LDC	MOTA	75 - 80
MCM7681LDM	MOTA	75 - 83
MCM7684DC	MOTA	80 - 45
MCM7684DM	MOTA	80 - 50
MCM7685DM	MOTA	80 - 51
MCM10139F	♦MOTA	57 - 76
MCM10140AL	♦MOTA	23 - 8
MCM10140L	♦MOTA	23 - 4
MCM10142AL	♦MOTA	23 - 1
MCM10142L	♦MOTA	23 - 5
MCM10144AL	MOTA	24 - 58
MCM10144F	MOTA	24 - 55
MCM10145F	MOTA	21 - 30
MCM10146F	MOTA	34 - 2
MCM10147AL	MOTA	23 -106
MCM10147F	MOTA	23 -109
MCM10148AL	♦MOTA	23 - 9
MCM10148F	♦MOTA	23 - 2
MCM10149AL	MOTA	59 - 64
MCM10149F	MOTA	60 - 97
MCM10150AL	♦MOTA	59 - 63
MCM10539F	MOTA	57 - 77
MCM10539L	MOTA	57 - 78
MCM10544F	MOTA	24 - 56
MCM10544L	MOTA	24 - 57
MCM10545F	MOTA	21 - 31
MCM10545L	MOTA	21 - 32
MCM10546F	MOTA	34 - 7
MCM10546L	MOTA	34 - 8
MCM10547F	MOTA	23 -107
MCM10547L	MOTA	23 -108
MCM10548F	MOTA	22 -107
MCM10548L	MOTA	22 -108
MCM10549F	MOTA	60 - 98
MCM10549L	MOTA	60 - 99
MCM10552F	MOTA	24 - 46
MCM10552L	MOTA	24 - 47
MCM14505AL	♦MOTA	23 - 14
MCM14505BAL	♦MOTA	23 - 15
MCM14505BCL	♦MOTA	23 - 16
MCM14505BCP	♦MOTA	23 - 17
MCM14505CL	♦MOTA	23 - 18
MCM14505CP	♦MOTA	23 - 19
MCM14505L	♦MOTA	23 - 13
MCM65116-12C	MOTA	44 - 36
MCM65116-12P	MOTA	44 - 37
MCM65116-15C	MOTA	44 - 46
MCM65116-15P	MOTA	44 - 47
MCM65116-20C	MOTA	44 - 52
MCM65116-20P	MOTA	44 - 53
MCM65147-55C	♦MOTA	48 -107
MCM65147-55P	♦MOTA	48 -108
MCM65147-70C	♦MOTA	48 -109
MCM65147-70P	♦MOTA	48 -110
MCM65308L	MOTA	74 - 31
MCM65308P	MOTA	74 - 32
MCM65317L	MOTA	79 - 25
MCM65317P	MOTA	79 - 26
MCM65516-43	♦MOTA	79 - 7
MCM65516-55	♦MOTA	79 - 34
MCM66320AL15	MOTA	55 - 79
MCM66320AL20	MOTA	55 - 93
MCM66321AL15	MOTA	55 - 80
MCM66321AL20	MOTA	55 - 94
MCM66330AL15	MOTA	55 - 81
MCM66330AL20	MOTA	55 - 95
MCM66331AL15	MOTA	55 - 82
MCM66331AL20	MOTA	55 - 96
MCM66700L	MOTA	86 - 27
MCM66710L	MOTA	86 - 41
MCM66714L	MOTA	86 - 42
MCM66720L	MOTA	86 - 43
MCM66730L	MOTA	86 - 44
MCM66734L	MOTA	86 - 45
MCM66740L	MOTA	86 - 46
MCM66750L	MOTA	86 - 47
MCM66751C	MOTA	85 - 57
MCM66751P	MOTA	85 - 58
MCM66760L	MOTA	86 - 48
MCM66770L	MOTA	86 - 49
MCM66780L	MOTA	86 - 50
MCM66790L	MOTA	86 - 51
MCM68308L	MOTA	74 - 46
MCM68308P	MOTA	74 - 47
MCM68316E1L	MOTA	79 - 27
MCM68316E1P	MOTA	79 - 28
MCM68316EL	MOTA	79 - 29
MCM68316EP	MOTA	79 - 30
MCM68317L	MOTA	79 - 81
MCM68317P	MOTA	79 - 82
MCM68332L	MOTA	82 - 6
MCM68332P	MOTA	82 - 7
MCM68708BJCS#ai		76 - 23
	♦MOTA	
MCM68708CJCS#ai		76 - 24
	♦MOTA	
MCM68708MTL#ai		76 - 25
	♦MOTA	
MCM68732C0	MOTA	82 - 58
MCM68732C1	MOTA	82 - 59
MCM68732C35	MOTA	82 - 49
MCM68732C	MOTA	82 - 60
MCM68732L1	MOTA	82 - 61
MCM68732L35	MOTA	82 - 50
MCM68732L	MOTA	82 - 62
MCM68766-35L	♦MOTA	83 - 11

TYPE No.	MFRS	Pg&Line
MCM82707L	MOTA	75 - 75
MCM82707P	MOTA	75 - 76
MCM82708L	MOTA	75 - 77
MCM82708P	MOTA	75 - 78
MCM93412DC	MOTA	27 - 59
MCM93412DM	MOTA	27 - 60
MCM93412FM	MOTA	27 - 61
MCM93412PC	MOTA	27 - 62
MCM93425FM	MOTA	34 - 82
MCM93425PC	MOTA	34 - 79
MCM145101-1L	MOTA	28 - 49
MCM145101-1P	MOTA	28 - 50
MCM145101-3L	MOTA	28 - 76
MCM145101-3P	MOTA	28 - 77
MCM145101-8L	MOTA	28 -105
MCM145101-8P	MOTA	28 -106
MCM145101L	MOTA	28 - 78
MCM145101P	MOTA	28 - 79
MCM146504	MOTA	49 - 9
MCM146508-1L	MOTA	35 - 58
MCM146508-1P	MOTA	35 - 59
MCM146508-2L	MOTA	35 - 60
MCM146508L	MOTA	35 -104
MCM146508P	MOTA	35 -105
MCM146514L	MOTA	39 -102
MCM146514P	MOTA	39 -103
MCM146518-1L	MOTA	35 - 61
MCM146518-1P	MOTA	35 - 62
MCM146518-2L	MOTA	35 - 63
MCM146518L	MOTA	35 -106
MCM146518P	MOTA	35 -107
MCS1004	♦MTY	84 - 32
MCS1004A	♦MTY	85 - 99
MCS1005	MTY	84 - 33
MCS1007	MTY	62 - 80
MCS1008	MTY	58 - 77
MCS1009	MTY	65 - 60
MCS2000	MTY	84 - 98
MCS2001	MTY	84 - 35
MCS2002	MTY	65 - 33
MCS2003	MTY	65 - 59
MCS2004	MTY	68 - 17
MCS2005	MTY	71 - 25
MCS2006	MTY	77 - 4
MCS2007	MTY	65 - 18
MCS2008	MTY	81 - 5
MCS2009	MTY	77 - 6
MCS2010	MTY	71 - 37
MCS2011	MTY	66 - 40
MCS2012	MTY	63 - 49
MCS2014	MTY	71 - 26
MCS2015	MTY	65 - 63
MCS2017#1	♦MTY	84 - 18
MCS2017#2	♦MTY	71 - 23
MCS2018#1	♦MTY	84 - 17
MCS2018#2	♦MTY	65 - 64
MCS2020#1	♦MTY	84 - 16
MCS2020#2	♦MTY	65 - 57
MCS2022#1	♦MTY	84 - 20
MCS2022#2	♦MTY	77 - 3
MCS2023	♦MTY	73 - 20
MCS2024#1	♦MTY	84 - 15
MCS2024#2	♦MTY	71 - 28
MCS2025#1	♦MTY	84 - 19
MCS2025#2	♦MTY	71 - 27
MCS2026	MTY	78 - 43
MCS2028	MTY	84 - 34
MCS2029	MTY	81 - 92
MCS2050	MTY	27 - 44
MCS2102	♦MTY	104 - 12
MCS2104	♦MTY	101 - 1
MCS2109	♦MTY	103 - 50
MD2114	ITL	41 - 86
MD2118-10	ITL	54 -108
MD2118-12	ITL	55 - 5
MD2118-15	ITL	55 - 12
MD2141-3	ITL	51 -103
MD2141-4	ITL	52 - 10
MD2141-5	ITL	52 - 28
MD2164-15#ai	ITL	56 - 31
MD2164-20#ai	ITL	56 - 42
MD2164-25#ai	ITL	56 - 53
MD2167-10#ai	ITL	55 - 59
MD2167-55#ai	ITL	55 - 35
MD2167-70#ai	ITL	55 - 49
MD2167L70#ai	ITL	55 - 50
MD2186#ai	ITL	53 - 2
MD2708	ITL	76 - 26
MD3601	ITL	61 - 69
MD3604	ITL	70 - 67
MD3624	ITL	70 - 68
MD3636	ITL	80 - 48
MD4330BD	MITC	101 - 2
MD4331BE	MITC	101 - 3
MD4332BC	MITC	101 - 7
MD5200	MILC	59 - 65
MD5200-0002	MILC	87 - 90
MD5200-0003	MILC	87 - 91
MD5200-0004	MILC	87 - 22
MD5200-0005	MILC	87 - 23
MD5205	MILC	65 - 92
MD5210	MILC	62 - 61
MD5225	MILC	68 - 5
MD5300	MILC	60 -101
MD5330	MILC	58 - 59
MD5331	MILC	58 - 60
MD5500	MILC	21 - 35
MD5501	MILC	21 - 33
MD6200	MILC	59 - 66
MD6200-0002	MILC	87 - 92
MD6200-0003	MILC	87 - 93
MD6200-0004	MILC	87 - 24
MD6200-0005	MILC	87 - 25
MD6205	MILC	65 - 91

TYPE No.	MFRS	Pg&Line
MD6210	MILC	62 - 60
MD6225	MILC	68 - 4
MD6300	MILC	60 -100
MD6305	MILC	66 - 87
MD6330	MILC	58 - 47
MD6331	MILC	58 - 48
MD6500	MILC	21 - 36
MD6501	MILC	21 - 34
MD6510	MILC	25 - 65
MD6703AC	♦MITC	105 -110
MD6703AE	♦MITC	106 - 1
MD6703AF	♦MITC	106 - 2
ME511	AMI	84 - 88
MEM3008PS	♦GIC	97 - 65
MEM3021	♦GIC	100 - 75
MEM3021B	♦GIC	100 - 71
MEM-1B	WLD	32 - 76
MEM-2	WLD	32 - 77
MEM-3	WLD	44 -107
MEM-6	WLD	32 - 78
MF1101A1#1	MILC	27 - 11
MF1101A1#2	MILC	27 - 12
MF1101A#1	MILC	27 - 30
MF1101A#2	MILC	27 - 31
MF1103	♦MILC	33 - 49
MF1103-1	♦MILC	33 - 21
MF1103-1#1	MILC	33 - 22
MF1103-1#2	MILC	33 - 23
MF1103#1	MILC	33 - 50
MF1103#2	MILC	33 - 51
MF1301#1	MILC	63 - 43
MF1301#2	MILC	62 - 79
MF1402A	MILC	105 - 92
MF1403A	MILC	106 - 92
MF1403A#1	MILC	106 - 93
MF1403A#2	MILC	106 - 94
MF1404A	MILC	107 - 66
MF1404A#1	MILC	107 - 67
MF1404A#2	MILC	107 - 68
MF1405	MILC	106 - 23
MF1406	MILC	103 - 79
MF1407	MILC	103 - 80
MF1506	MILC	103 - 81
MF1507	MILC	103 - 82
MF1601#1	♦MILC	62 - 84
MF1601#2	♦MILC	64 -105
MF1602	♦MILC	64 -106
MF1701#1	♦MILC	62 - 85
MF1701#2	♦MILC	64 -107
MF1702	♦MILC	64 -108
MF2102	MILC	38 - 18
MF2102-1	MILC	38 - 19
MF2102#1	MILC	38 - 69
MF2102#2	MILC	38 - 70
MF2401	MILC	108 - 27
MF7005	MILC	33 - 37
MF7006	MILC	33 - 71
MF7104	MILC	104 - 54
MF7105	MILC	104 - 11
MF7107	MILC	84 - 84
MF7110	MILC	68 - 37
MF7111	MILC	107 - 8
MF7111A	MILC	107 - 7
MF7112	MILC	48 - 17
MGF8	♦WLD	96 - 51
MIC370-1D	ITTG	90 - 27
MIC370-1D1	ITTG	90 - 28
MIC370-5D	ITTG	90 - 29
MIC370-5D1	ITTG	90 - 30
MIC5033-5D1	♦ITTG	20 - 98
MIC5033-5D2	♦ITTG	20 - 99
MIC5481J	ITTG	20 - 86
MIC5484J	ITTG	20 - 87
MIC5491AJ	ITTG	99 - 63
MIC5494J	ITTG	94 - 39
MIC5495AJ	ITTG	92 - 31
MIC5495J	ITTG	93 - 72
MIC5496J	ITTG	95 - 33
MIC6475J	ITTG	90 - 39
MIC6481J	ITTG	20 - 88
MIC6484J	ITTG	20 - 89
MIC6491AJ	ITTG	99 - 64
MIC6494J	ITTG	94 - 40
MIC6495AJ	ITTG	92 - 32
MIC6495J	ITTG	93 - 73
MIC6496J	ITTG	95 - 34
MIC7481J	♦ITTG	20 - 90
MIC7481N	♦ITTG	20 - 91
MIC7484J	♦ITTG	20 - 92
MIC7484N	♦ITTG	20 - 93
MIC7491AJ	♦ITTG	99 - 65
MIC7491AN	♦ITTG	99 - 66
MIC7494J	♦ITTG	94 - 41
MIC7494N	♦ITTG	94 - 42
MIC7495AJ	♦ITTG	92 - 33
MIC7495AN	♦ITTG	92 - 34
MIC7495J	♦ITTG	93 - 74
MIC7495N	♦ITTG	93 - 75
MIC7496J	♦ITTG	95 - 35
MIC7496N	♦ITTG	95 - 36
MIC9030-5D	ITTG	20 - 6
MIC9033-5D1	♦ITTG	20 -100
MIC9033-5D2	♦ITTG	20 -101
MIC9300-1D	ITTG	92 - 72
MIC9300-5D	ITTG	92 - 73
MIC9328-1D	ITTG	99 -102
MIC9328-5D	ITTG	99 -103
MIC54164J	ITTG	98 -108
MIC54165J	ITTG	98 - 40
MIC54166J	ITTG	98 - 48
MIC54174J	ITTG	95 - 95
MIC54175J	ITTG	90 - 40
MIC54194J	ITTG	92 - 74
MIC54195J	ITTG	93 - 46

♦-Mfr's data sheet available in microfilm service

Cur-In current D.A.T.A.BOOK
Δ-Registered with JEDEC by this manufacturer

Obs-In this book

1. TYPE No. CROSS INDEX

IN TYPE NUMBER SEQUENCE

TYPE No.	MFRS	Pg&Line
MIC64118J	ITTG	95 - 96
MIC64164J	ITTG	98 -109
MIC64165J	ITTG	98 - 41
MIC64166J	ITTG	98 - 49
MIC64174J	ITTG	95 - 97
MIC64175J	ITTG	90 - 41
MIC64194J	ITTG	92 - 75
MIC64195J	ITTG	93 - 47
MIC74164J	♦ITTG	98 -110
MIC74164N	♦ITTG	99 - 1
MIC74165J	ITTG	98 - 42
MIC74165N	ITTG	98 - 43
MIC74166J	ITTG	98 - 50
MIC74166N	ITTG	98 - 51
MIC74174J	ITTG	95 - 98
MIC74174N	ITTG	95 - 99
MIC74175J	ITTG	90 - 42
MIC74175N	ITTG	90 - 43
MIC74194J	♦ITTG	92 - 76
MIC74194N	♦ITTG	92 - 77
MIC74195J	♦ITTG	93 - 48
MIC74195N	♦ITTG	93 - 49
MK48D02J#ai	MOS	44 - 87
MK48D02N#ai	MOS	44 - 88
MK48D02P#ai	MOS	44 - 89
MK1002N	♦MOS	104 - 40
MK1007P	♦MOS	103 - 34
MK2000P#1	♦MOS	84 - 39
MK2000P#2	♦MOS	84 - 23
MK2002P	♦MOS	84 - 40
MK2002P#1	♦MOS	84 - 41
MK2002P#2	♦MOS	84 - 24
MK2101P	MOS	84 -106
MK2141J-2	♦MOS	44 -103
MK2141J-3	♦MOS	44 -105
MK2141N-2	♦MOS	44 -104
MK2141N-3	♦MOS	44 -106
MK2147J-55	♦MOS	49 - 23
MK2147J-70	♦MOS	49 - 24
MK2147J-85	♦MOS	45 - 4
MK2147J-90	♦MOS	49 - 25
MK2147N-55	MOS	44 -109
MK2147N-70	MOS	45 - 2
MK2147N-85	MOS	45 - 5
MK2148J-70	♦MOS	40 - 5
MK2148J-85	♦MOS	40 - 3
MK2148P-70	♦MOS	40 - 6
MK2148P-85	♦MOS	40 - 4
MK2300P	MOS	86 - 15
MK2302P	MOS	85 - 3
MK2400P24	♦MOS	65 - 29
MK2400P28	♦MOS	65 - 30
MK2400P28#1	♦MOS	65 - 31
MK2400P28#2	♦MOS	65 - 32
MK2408P	♦MOS	84 - 87
MK2500P#1	♦MOS	69 - 14
MK2500P#2	♦MOS	71 - 81
MK2503P#1	MOS	87 - 45
MK2503P#2	MOS	88 - 9
MK2600P#1	♦MOS	69 - 15
MK2600P#2	♦MOS	71 - 82
MK2601P#1	MOS	87 - 46
MK2601P#2	MOS	88 - 10
MK2708T	♦MOS	76 - 27
MK2716J-5	♦MOS	80 - 68
MK2716J-6	♦MOS	80 - 75
MK2716J-7	♦MOS	80 - 98
MK2716J-8	♦MOS	80 - 87
MK2716T-5	♦MOS	80 - 69
MK2716T-6	♦MOS	80 - 76
MK2716T-7	♦MOS	80 - 80
MK2716T-8	♦MOS	80 - 88
MK2716T-12	♦MOS	80 -100
MK2764T-8	♦MOS	83 - 36
MK3101P	MOS	84 -107
MK3602P-1	♦MOS	63 - 39
MK3602P-2	♦MOS	63 - 41
MK3602P-3	♦MOS	63 - 46
MK3702T-1	♦MOS	63 - 40
MK3702T-2	♦MOS	63 - 42
MK3702T-3	♦MOS	63 - 47
MK4001P	♦MOS	27 - 47
MK4002P	♦MOS	23 - 60
MK4006-6P	♦MOS	33 - 72
MK4006P	♦MOS	33 - 73
MK4007-4P	♦MOS	27 - 42
MK4007P	♦MOS	27 - 43
MK4008-6P	♦MOS	33 - 76
MK4008-9P	♦MOS	33 - 82
MK4008P	♦MOS	33 - 77
MK4012P	♦MOS	101 - 62
MK4027P-2Δ	INL	45 - 72
MK4027P-3Δ	INL	46 - 24
MK4027P-4	MOS	46 - 94
MK4027P-4Δ	INL	46 - 95
MK4096K-6	♦MOS	48 - 42
MK4096K-11	♦MOS	48 - 72
MK4096K-16	♦MOS	48 - 57
MK4096N-6	♦MOS	48 - 43
MK4096N-11	♦MOS	48 - 73
MK4096N-15	♦MOS	48 - 74
MK4096N-16	♦MOS	48 - 58
MK4096P1	♦MOS	48 - 75
MK4096P7	♦MOS	48 - 59
MK4096P-6	♦MOS	48 - 44
MK4096P-11	♦MOS	48 - 76
MK4096P-15	♦MOS	48 - 77
MK4096P-16	♦MOS	48 - 60
MK4096P-85	♦MOS	48 - 78
MK4102P	MOS	38 - 71
MK4102P-1	♦MOS	37 - 95
MK4102P-6	♦MOS	34 - 94
MK4104P-3	♦MOS	49 -102
MK4104P-4	♦MOS	50 - 18

TYPE No.	MFRS	Pg&Line
MK4104P-5	♦MOS	50 - 46
MK4104P-6	♦MOS	50 - 52
MK4104P-33	♦MOS	49 -103
MK4104P-34	♦MOS	50 - 19
MK4104P-35	♦MOS	50 - 47
MK4114P-3	♦MOS	40 - 66
MK4114P-4	♦MOS	40 - 98
MK4114P-5	♦MOS	41 - 39
MK4116P-1	♦MOS	53 - 65
MK4118J-1	♦MOS	43 - 38
MK4118J-2	♦MOS	43 - 41
MK4118J-3	♦MOS	43 - 47
MK4118J-4	♦MOS	43 - 53
MK4118N-1	♦MOS	43 - 39
MK4118N-2	♦MOS	43 - 42
MK4118N-3	♦MOS	43 - 48
MK4118N-4	♦MOS	43 - 54
MK4118P-1	♦MOS	43 - 40
MK4118P-2	♦MOS	43 - 43
MK4118P-3	♦MOS	43 - 49
MK4118P-4	♦MOS	43 - 55
MK4147J-55	♦MOS	44 -102
MK4147J-70	♦MOS	49 - 50
MK4147J-85	♦MOS	49 - 66
MK4147N-55	♦MOS	49 - 38
MK4147N-70	♦MOS	49 - 51
MK4147N-85	♦MOS	49 - 67
MK4164J-10	♦MOS	55 -104
MK4164J-12	MOS	55 -106
MK4164N-10	♦MOS	55 -105
MK4167P55#ai	♦MOS	55 - 24
MK4167P70	none	55 - 27
MK4200K-11	♦MOS	48 - 79
MK4200K-16	♦MOS	48 - 61
MK4200N-11	♦MOS	48 - 80
MK4200N-16	♦MOS	48 - 62
MK4200P-11	♦MOS	48 - 81
MK4200P-16	♦MOS	48 - 63
MK4516E10#ai	MOS	53 - 37
MK4516E-10	♦MOS	53 - 35
MK4516E-12	MOS	53 - 36
MK4516E-20	MOS	53 -107
MK4516J-8	♦MOS	53 - 38
MK4516J-10	♦MOS	53 - 40
MK4516N-8	♦MOS	53 - 39
MK4516N-10	♦MOS	53 - 41
MK4516N-20	MOS	54 - 1
MK4801P-55	♦MOS	43 - 35
MK4801P-70	♦MOS	43 - 36
MK4801P-90	♦MOS	43 - 37
MK4802P-55	♦MOS	44 - 67
MK4808-2	♦MOS	43 - 22
MK4808-3	♦MOS	43 - 24
MK4808-4	♦MOS	43 - 26
MK4809-2	♦MOS	43 - 23
MK4809-3	♦MOS	43 - 25
MK4809-4	♦MOS	43 - 27
MK4809-5	♦MOS	43 - 28
MK4816-2	♦MOS	44 - 15
MK4816-3	♦MOS	44 - 16
MK4816-4	♦MOS	44 - 17
MK4816-5	♦MOS	44 - 18
MK4816N-3	♦MOS	44 - 19
MK28000P#1	♦MOS	78 - 42
MK28000P#2	♦MOS	81 - 14
MK30000N	♦MOS	74 - 33
MK30000P	♦MOS	74 - 34
MK31000P-3	♦MOS	77 - 5
MK32000P-5	♦MOS	81 - 98
MKB2716T-87	♦MOS	80 - 81
MKB2716T-88	♦MOS	80 - 89
MKB2716T-90	♦MOS	80 - 99
MKB4116E-93	MOS	54 - 2
MKB4116F-93	MOS	54 - 3
MKB4116J-93	MOS	54 - 4
MKB4116P-93	MOS	54 - 5
MKB4118J-82	MOS	43 - 44
MKB4118J-83	MOS	43 - 50
MKB4118P-82	MOS	43 - 45
MKB4118P-83	MOS	43 - 51
ML1101	♦MILC	27 - 32
ML1103	♦MILC	33 - 52
ML11011	♦MILC	27 - 13
MM54C95D	♦NSC	90 -100
MM54C95F	♦NSC	91 - 9
MM54C95J	♦NSC	91 - 10
MM54C164D	♦NSC	98 - 68
MM54C164F	♦NSC	98 - 69
MM54C164J	♦NSC	98 - 70
MM54C165D	♦NSC	97 - 78
MM54C165F	♦NSC	97 - 79
MM54C165J	♦NSC	97 - 80
MM54C173D	NSC	91 - 33
MM54C173F	NSC	91 - 34
MM54C173J	NSC	91 - 35
MM54C174D	NSC	95 -105
MM54C174F	NSC	95 -106
MM54C174J	NSC	95 -107
MM54C175D	♦NSC	91 - 11
MM54C175F	♦NSC	91 - 12
MM54C175J	♦NSC	91 - 13
MM54C195D	♦NSC	90 - 92
MM54C195F	♦NSC	90 - 93
MM54C195J	♦NSC	90 - 94
MM54C922N	NSC	89 - 8
MM54C923N	NSC	89 - 10
MM74C95J	NSC	91 - 14
MM74C95N	NSC	90 -101
	TSC	
MM74C164J	♦NSC	98 - 71
MM74C164N	NSC	98 - 72
	TSC	
MM74C165J	NSC	97 - 81
MM74C165N	NSC	97 - 82

TYPE No.	MFRS	Pg&Line
MM74C173J	NSC	91 - 36
MM74C173N	NSC	91 - 37
	TSC	
MM74C174J	NSC	95 -108
MM74C174N	NSC	95 -109
MM74C175J	NSC	91 - 15
MM74C175N	NSC	91 - 16
MM74C195J	♦NSC	90 - 95
MM74C195N	♦NSC	90 - 96
	TSC	
MM74C374J	NSC	96 - 56
MM74C374N	NSC	96 - 57
MM74C922N	NSC	89 - 9
MM74C923N	NSC	89 - 11
MM82S190-1	♦STX	79 - 85
MM82S190-2	♦STX	79 - 89
MM82S190-3	♦STX	79 - 93
MM82S191-1	♦STX	79 - 86
MM82S191-2	♦STX	79 - 90
MM82S191-3	♦STX	79 - 94
MM400H	♦NSC	100 -100
MM401H	NSC	100 -101
MM402H	♦NSC	101 - 87
MM403H	NSC	101 - 88
MM404H	♦NSC	100 - 56
MM405H	♦NSC	101 - 13
MM406H	NSC	103 - 70
MM407H	NSC	103 - 71
MM408	♦NSC	98 - 65
MM409	♦NSC	97 - 68
MM410	♦NSC	102 - 61
MM421	♦NSC	60 - 84
MM422#1	♦NSC	59 - 24
MM422#2	♦NSC	60 - 85
MM422BN	♦NSC	59 - 39
MM423#1	NSC	63 - 78
MM423#2	NSC	66 - 67
MM423BO#1	NSC	88 - 98
MM423BO#2	NSC	88 -101
MM500H	♦NSC	100 -102
MM501H	NSC	100 -103
MM502H	♦NSC	101 - 89
MM503H	NSC	101 - 90
MM504H	♦NSC	100 - 57
MM505H	♦NSC	101 - 14
MM506H	NSC	103 - 72
MM507H	NSC	103 - 73
MM508	♦NSC	98 - 66
MM509	♦NSC	97 - 69
MM510	♦NSC	102 - 62
MM521	♦NSC	60 - 86
MM522#1	♦NSC	59 - 25
MM522#2	♦NSC	60 - 87
MM522BN	♦NSC	59 - 40
MM523#1	NSC	63 - 79
MM523#2	NSC	66 - 68
MM523BO#1	NSC	88 - 99
MM523BO#2	NSC	88 -102
MM1101A1D	♦NSC	27 - 14
MM1101A1N	♦NSC	27 - 15
MM1101A2D	♦NSC	27 - 1
MM1101A2N	♦NSC	27 - 2
MM1101AD	♦NSC	27 - 33
MM1101AN	♦NSC	27 - 34
MM1101D	♦NSC	27 - 35
MM1101N	♦NSC	27 - 36
MM1103D	NSC	33 - 53
MM1103N	NSC	33 - 54
MM1402A	♦MMI	105 - 74
MM1402AD	♦NSC	105 - 93
MM1402AN	♦NSC	105 - 94
MM1403A	MMI	106 - 64
MM1403AH	♦NSC	106 - 95
MM1403AN	♦NSC	106 - 96
MM1404A	MMI	107 - 27
MM1404AH	NSC	107 - 69
MM1404AN	♦NSC	107 - 70
MM1405A	MMI	106 - 59
MM1412A	MMI	107 - 22
MM1702AD	♦NSC	64 - 92
MM1742J	NSC	65 - 9
MM2101-1D	♦NSC	30 - 55
MM2101-1N	♦NSC	30 - 56
MM2101-2D	♦NSC	30 - 73
MM2101-2N	♦NSC	30 - 74
MM2101D	♦NSC	31 - 9
MM2101N	♦NSC	31 - 10
MM2111-1D	♦NSC	30 - 57
MM2111-1N	♦NSC	30 - 58
MM2111-2D	♦NSC	30 - 75
MM2111-2N	♦NSC	30 - 76
MM2111D	♦NSC	31 - 11
MM2111N	♦NSC	31 - 12
MM2112AJ	♦NSC	29 -103
MM2112AJ-2	♦NSC	29 - 83
MM2112AJ-4	♦NSC	30 - 23
MM2112AJ-4L	♦NSC	30 - 24
MM2112AJ-6	♦NSC	30 - 77
MM2112AJ-6L	♦NSC	30 - 78
MM2112AJ-L	♦NSC	29 -104
MM2112AN	♦NSC	29 -105
MM2112AN-2	♦NSC	29 - 84
MM2112AN-4	♦NSC	30 - 25
MM2112AN-4L	♦NSC	30 - 26
MM2112AN-6	♦NSC	30 - 79
MM2112AN-6L	♦NSC	30 - 80
MM2112AN-L	♦NSC	29 -106
MM2114N-055	♦NSC	41 - 87
MM2147N-055	♦NSC	49 - 52
MM2316EJ	NSC	79 - 12
MM2402	MMI	105 -105
MM2403	MMI	106 -109
MM2404	MMI	107 - 88
MM2405	♦MMI	106 - 34

TYPE No.	MFRS	Pg&Line
MM2406	♦MMI	103 -106
MM2407	♦MMI	103 -107
MM2412	♦MMI	107 - 52
MM2708-1	NSC	76 - 2
MM2708M	NSC	76 - 28
MM2716	NSC	80 - 90
MM2758	NSC	80 - 91
MM2758-1	NSC	80 - 77
MM3200-2C	STX	82 - 33
MM3200-3C	STX	82 - 35
MM3402	MMI	105 -106
MM3403	MMI	106 -110
MM3404	MMI	107 - 89
MM3405	♦MMI	106 - 35
MM3406	♦MMI	103 -108
MM3407	♦MMI	103 -109
MM3412	♦MMI	107 - 53
MM3501D	♦NSC	59 - 26
MM3501J	♦NSC	59 - 27
MM3501N	♦NSC	59 - 28
MM4001AH	♦NSC	102 - 56
MM4006AD	♦NSC	103 - 86
MM4006AH	♦NSC	103 - 87
MM4007AAD	NSC	103 - 12
MM4007AAH	NSC	103 - 13
MM4007D	NSC	103 - 88
MM4007H	NSC	103 - 89
MM4007XXD	NSC	103 - 60
MM4007XXH	NSC	103 - 61
MM4010AH	♦NSC	102 - 57
MM4012D	NSC	105 - 38
MM4012N	NSC	105 - 39
MM4013D	♦NSC	107 - 30
MM4013H	♦NSC	107 - 31
MM4015AD	NSC	102 - 84
MM4016D	♦NSC	106 - 26
MM4016H	♦NSC	106 - 27
MM4017D	♦NSC	106 - 67
MM4017H	♦NSC	106 - 68
MM4018H	NSC	102 - 85
MM4019D	♦NSC	105 - 40
MM4019H	NSC	105 - 41
MM4019XXD	NSC	105 - 25
MM4019XXH	NSC	105 - 26
MM4020D	NSC	103 - 37
MM4020N	NSC	103 - 38
MM4021D	NSC	103 - 23
MM4021H	NSC	103 - 24
MM4021N	NSC	103 - 25
MM4025D	♦NSC	108 - 12
MM4026D	♦NSC	108 - 13
MM4027F	♦NSC	108 - 22
MM4040H	♦NSC	100 - 69
MM4050	♦NSC	101 - 15
MM4050AD	♦NSC	101 - 26
MM4050AH	♦NSC	101 - 27
MM4051	♦NSC	101 - 16
MM4051AH	♦NSC	101 - 28
MM4052H	NSC	103 - 17
MM4053H	NSC	104 - 9
MM4104H	♦NSC	106 - 3
MM4105H	NSC	102 - 92
MM4203D#1	NSC	64 -109
MM4203D#2	NSC	67 - 97
MM4203Q#1	NSC	64 -110
MM4203Q#2	NSC	67 - 98
MM4204D	NSC	71 - 3
MM4210D	♦NSC	60 - 64
MM4210J	♦NSC	60 - 65
MM4211D	♦NSC	60 - 75
MM4211J	♦NSC	60 - 76
MM4213D#1	♦NSC	63 - 66
MM4213D#2	♦NSC	66 - 56
MM4213J#1	♦NSC	63 - 67
MM4213J#2	♦NSC	66 - 57
MM4213N#1	♦NSC	63 - 68
MM4213N#2	♦NSC	66 - 58
MM4220APJ	♦NSC	88 - 46
MM4220BLJ	♦NSC	89 - 22
MM4220BMJ	♦NSC	109 - 97
MM4220BNJ	♦NSC	109 - 1
MM4220D#1	NSC	59 - 14
MM4220D#2	NSC	60 - 66
MM4220EKJ#1	♦NSC	88 - 52
MM4220EKJ#2	♦NSC	87 - 12
MM4220J#1	NSC	59 - 15
MM4220J#2	NSC	60 - 67
MM4220LRJ#1	♦NSC	88 - 49
MM4220LRJ#2	♦NSC	87 - 65
MM4220NPJ	NSC	85 - 21
MM4221J#1	♦NSC	59 - 20
MM4221J#2	♦NSC	60 - 77
MM4224D#1	NSC	63 - 80
MM4224D#2	NSC	66 - 69
MM4224D#3	NSC	71 - 39
MM4224D#4	NSC	77 - 8
MM4225D#1	NSC	63 - 81
MM4225D#2	NSC	66 - 70
MM4225D#3	NSC	71 - 40
MM4225D#4	NSC	77 - 9
MM4227D	NSC	65 - 44
MM4228D	NSC	65 - 45
MM4229D	♦NSC	65 - 49
MM4230D#1	NSC	63 - 59
MM4230D#2	NSC	66 - 49
MM4230FEJ#1	♦NSC	88 - 41
MM4230FEJ#2	♦NSC	88 - 12
MM4230J#1	NSC	63 - 60
MM4230J#2	NSC	66 - 50
MM4230JTJ#1	♦NSC	88 - 55
MM4230JTJ#2	♦NSC	88 - 15
MM4230NNJ	NSC	85 - 22
MM4230NOJ	NSC	85 - 23
MM4230QWJ	♦NSC	88 -103

TYPE No.	MFRS	Pg&Line
MM4230QXJ	♦NSC	87 -108
MM4230QYJ	♦NSC	87 - 38
MM4231CMUJ	♦NSC	88 - 90
MM4231D#1	♦NSC	63 - 72
MM4231D#2	♦NSC	66 - 62
MM4231J#1	♦NSC	63 - 73
MM4231J#2	♦NSC	66 - 63
MM4232AEIJ	♦NSC	109 -101
MM4232AEJJ	♦NSC	109 -102
MM4232AEKJ	♦NSC	109 -103
MM4232J#1	♦NSC	69 - 26
MM4232J#2	♦NSC	71 - 86
MM4233D	♦NSC	69 - 16
MM4233J	♦NSC	69 - 17
MM4240ACAJ	♦NSC	86 - 34
MM4240D	♦NSC	86 - 10
MM4240J	♦NSC	86 - 11
MM4241D	♦NSC	85 -103
MM4241J	♦NSC	85 -104
MM4241N	♦NSC	85 -105
MM4242J	♦NSC	74 - 60
MM4243J#1	♦NSC	65 - 10
MM4243J#2	♦NSC	67 -102
MM4244J	♦NSC	71 - 7
MM4246J	♦NSC	79 - 66
MM4247J	♦NSC	81 - 25
MM4250D	♦NSC	27 - 3
MM4260	NSC	33 - 63
MM4261D	♦NSC	33 - 69
MM4261N	♦NSC	33 - 70
MM4262D	♦NSC	43 - 98
MM4270D	♦NSC	47 - 22
MM4606AD	NSC	95 - 69
MM4606AF	NSC	95 - 70
MM4614AD	NSC	97 - 83
MM4614AF	NSC	97 - 84
MM4621AD	NSC	97 - 85
MM4621AF	NSC	97 - 86
MM4635AD	NSC	90 - 73
MM4635AF	NSC	90 - 74
MM5001AH	♦NSC	102 - 58
MM5006AD	♦NSC	103 - 90
MM5006AH	♦NSC	103 - 91
MM5007AAD	♦NSC	103 - 14
MM5007AAH	♦NSC	103 - 15
MM5007D	♦NSC	103 - 92
MM5007H	♦NSC	103 - 93
MM5007XXD	♦NSC	103 - 62
MM5007XXH	♦NSC	103 - 63
MM5010AH	♦NSC	102 - 59
MM5011A	NSC	102 - 60
MM5012D	NSC	105 - 42
MM5012N	NSC	105 - 43
MM5013D	♦NSC	107 - 32
MM5013H	♦NSC	107 - 33
MM5013N	♦NSC	107 - 34
MM5015AD	NSC	102 - 86
MM5016D	♦NSC	106 - 28
MM5016H	♦NSC	106 - 29
MM5016N	♦NSC	106 - 30
MM5017D	♦NSC	106 - 69
MM5017H	♦NSC	106 - 70
MM5017N	♦NSC	106 - 71
MM5018H	NSC	102 - 87
MM5019D	♦NSC	105 - 44
MM5019H	♦NSC	105 - 45
MM5019XXD	♦NSC	105 - 27
MM5019XXH	♦NSC	105 - 28
MM5020D	NSC	103 - 39
MM5020N	NSC	103 - 40
MM5021D	NSC	103 - 26
MM5021H	NSC	103 - 27
MM5021N	NSC	103 - 28
MM5023D	NSC	103 - 35
MM5023N	♦NSC	103 - 36
MM5024AH	♦NSC	107 - 71
MM5025D	♦NSC	108 - 14
MM5025N	♦NSC	108 - 15
MM5026D	♦NSC	108 - 16
MM5026N	♦NSC	108 - 17
MM5027F	♦NSC	108 - 23
MM5027N	♦NSC	108 - 24
MM5040H	♦NSC	100 - 70
MM5050	♦NSC	101 - 17
MM5050AD	NSC	101 - 29
MM5050AH	NSC	101 - 30
MM5051	NSC	101 - 18
MM5051AH	NSC	101 - 31
MM5052H	NSC	103 - 18
MM5053H	NSC	104 - 10
MM5054D	♦NSC	102 - 73
MM5054N	♦NSC	102 - 74
MM5056N	♦NSC	105 -107
MM5058N	♦NSC	107 - 93
MM5060AAD	♦NSC	104 - 51
MM5060AAN	♦NSC	104 - 52
MM5060ABD	♦NSC	104 - 78
MM5060ABN	♦NSC	104 - 79
MM5060ACD	♦NSC	104 - 84
MM5060ACN	♦NSC	104 - 85
MM5060ADD	♦NSC	104 - 97
MM5060ADN	♦NSC	104 - 98
MM5060XXD	♦NSC	104 - 99
MM5060XXN	♦NSC	104 -100
MM5061D	♦NSC	104 - 28
MM5061N	♦NSC	104 - 29
MM5081	♦NSC	100 - 30
MM5104H	♦NSC	106 - 4
MM5105H	NSC	102 - 93
MM5202AD	♦NSC	65 - 1
MM5202AQ	♦NSC	65 - 2
MM5203D#1	NSC	65 - 3
MM5203D#2	NSC	67 - 99
MM5203Q#1	NSC	65 - 4

♦-Mfr's data sheet available in microfilm service

Cur-In current D.A.T.A.BOOK
Δ-Registered with JEDEC by this manufacturer

Obs-In this book

1. TYPE No. CROSS INDEX

IN TYPE NUMBER SEQUENCE

TYPE No.	MFRS	Pg&Line
MM5203Q#2	NSC	67 -100
MM5204D	♦NSC	71 - 2
MM5210D	♦NSC	60 - 68
MM5210J	♦NSC	60 - 69
MM5210N	♦NSC	60 - 70
MM5211D	♦NSC	60 - 78
MM5211J	♦NSC	60 - 79
MM5211N	♦NSC	60 - 80
MM5212AD	♦NSC	76 -102
MM5212AN	♦NSC	76 -103
MM5213	♦NSC	63 - 63
MM5213D#1	♦NSC	63 - 69
MM5213D#2	♦NSC	66 - 59
MM5213J#1	♦NSC	63 - 70
MM5213J#2	♦NSC	66 - 60
MM5213N#1	♦NSC	63 - 71
MM5213N#2	♦NSC	66 - 61
MM5215	♦MMI	63 - 22
MM5215AD	♦NSC	76 -100
MM5215AN	♦NSC	76 -101
MM5216	♦MMI	63 - 23
MM5220	♦MMI	59 - 1
MM5220APJ	♦NSC	88 - 47
MM5220APN	♦NSC	88 - 48
MM5220BLJ	♦NSC	89 - 23
MM5220BLN	♦NSC	89 - 24
MM5220BMJ	♦NSC	109 - 98
MM5220BMN	♦NSC	109 - 99
MM5220BNJ	♦NSC	109 - 2
MM5220BNN	♦NSC	109 - 3
MM5220D#1	NSC	59 - 16
MM5220D#2	NSC	60 - 71
MM5220EKJ#1	♦NSC	88 - 53
MM5220EKJ#2	♦NSC	87 - 13
MM5220EKN#1	♦NSC	88 - 54
MM5220EKN#2	♦NSC	87 - 14
MM5220J#1	♦NSC	59 - 17
MM5220J#2	♦NSC	60 - 72
MM5220LRJ#1	♦NSC	88 - 50
MM5220LRJ#2	♦NSC	87 - 66
MM5220LRN#1	♦NSC	88 - 51
MM5220LRN#2	♦NSC	87 - 67
MM5220N#1	NSC	59 - 18
MM5220N#2	NSC	60 - 73
MM5220NPJ	NSC	85 - 24
MM5220NPN	NSC	85 - 25
MM5221	♦MMI	59 - 2
MM5221J#1	♦NSC	59 - 21
MM5221J#2	♦NSC	60 - 81
MM5221N#1	♦NSC	59 - 22
MM5221N#2	♦NSC	60 - 82
MM5221RQN#1	♦NSC	87 - 82
MM5221RQN#2	♦NSC	89 - 25
MM5221RRJ	♦NSC	87 - 15
MM5221RRN	♦NSC	87 - 16
MM5224D#1	NSC	63 - 82
MM5224D#2	NSC	66 - 71
MM5224D#3	NSC	71 - 41
MM5224D#4	NSC	77 - 10
MM5225D#1	NSC	63 - 83
MM5225D#2	NSC	66 - 72
MM5225D#3	NSC	71 - 42
MM5225D#4	NSC	77 - 11
MM5227D	♦NSC	65 - 46
MM5228D	NSC	65 - 47
MM5229D	NSC	65 - 50
MM5229N	♦NSC	65 - 51
MM5230D#1	NSC	63 - 61
MM5230D#2	NSC	66 - 51
MM5230FEJ#1	♦NSC	88 - 42
MM5230FEJ#2	♦NSC	88 - 13
MM5230FEN#1	♦NSC	88 - 43
MM5230FEN#2	♦NSC	88 - 14
MM5230J#2	NSC	66 - 52
MM5230JTJ#1	♦NSC	88 - 56
MM5230JTJ#2	♦NSC	88 - 16
MM5230JTN#1	♦NSC	88 - 57
MM5230JTN#2	♦NSC	88 - 17
MM5230N#2	NSC	66 - 53
MM5230NNJ	NSC	85 - 26
MM5230NNN	NSC	85 - 27
MM5230NOJ	NSC	85 - 28
MM5230NON	NSC	85 - 29
MM5230QWJ	♦NSC	88 -104
MM5230QWN	♦NSC	88 -105
MM5230QXJ	♦NSC	87 -109
MM5230QXN	♦NSC	87 -110
MM5230QYJ	♦NSC	87 - 39
MM5230QYN	♦NSC	87 - 40
MM5231CMUJ	♦NSC	88 - 91
MM5231CMUN	♦NSC	88 - 92
MM5231D#1	♦NSC	63 - 74
MM5231D#2	♦NSC	66 - 64
MM5231J#1	♦NSC	63 - 75
MM5231J#2	♦NSC	66 - 65
MM5231N#1	♦NSC	63 - 76
MM5231N#2	♦NSC	66 - 66
MM5232AEIJ	♦NSC	109 -104
MM5232AEIN	♦NSC	109 -105
MM5232AEJJ	♦NSC	109 -106
MM5232AEJN	♦NSC	109 -107
MM5232AEKJ	♦NSC	110 - 1
MM5232AEKN	♦NSC	110 - 2
MM5232J#1	♦NSC	69 - 27
MM5232J#2	♦NSC	71 - 87
MM5232N#1	♦NSC	69 - 28
MM5232N#2	♦NSC	71 - 88
MM5233D	♦NSC	69 - 18
MM5233J	♦NSC	69 - 19
MM5233N	♦NSC	69 - 20
MM5240ABUN	♦NSC	86 - 39
MM5240ABZJ	♦NSC	86 - 35
MM5240ACAJ	♦NSC	86 - 36
MM5240ACAN	♦NSC	86 - 37
MM5240D	♦NSC	86 - 12
MM5240J	♦NSC	86 - 13
MM5240N	♦NSC	86 - 14
MM5241D	♦NSC	85 -106
MM5241J	♦NSC	85 -107
MM5241N	♦NSC	85 -108
MM5242J	♦NSC	74 - 54
MM5242N	♦NSC	74 - 55
MM5243J#1	♦NSC	65 - 11
MM5243J#2	♦NSC	67 -103
MM5244J	♦NSC	71 - 6
MM5246J	♦NSC	79 - 51
MM5246N	♦NSC	79 - 52
MM5247J	♦NSC	81 - 23
MM5247N	♦NSC	81 - 24
MM5260D	NSC	33 - 64
MM5260N	NSC	33 - 65
MM5261D	♦NSC	33 - 67
MM5261N	♦NSC	33 - 68
MM5262D	♦NSC	43 - 95
MM5262N	♦NSC	43 - 96
MM5269D	♦NSC	31 - 13
MM5269N	♦NSC	31 - 14
MM5270AD	♦NSC	45 - 73
MM5270AJ	♦NSC	45 - 74
MM5270AN	♦NSC	45 - 75
MM5270D5	♦NSC	47 - 23
MM5270D	♦NSC	46 - 25
MM5271AD	♦NSC	45 - 43
MM5271AJ	♦NSC	45 - 44
MM5271AN	♦NSC	45 - 45
MM5271D	♦NSC	46 - 96
MM5280AD	♦NSC	45 - 76
MM5280AJ	♦NSC	45 - 77
MM5280AN	♦NSC	45 - 78
MM5280D5	♦NSC	47 - 24
MM5280D	♦NSC	46 - 26
MM5280D-055	♦NSC	47 - 25
MM5280J-055	♦NSC	47 - 26
MM5280N-055	♦NSC	47 - 27
MM5281D	♦NSC	46 - 97
MM5290N-055	NSC	54 - 37
MM5500#1	♦MMI	22 - 42
MM5500#2	♦MMI	22 - 43
MM5501#1	♦MMI	22 - 16
MM5501#2	♦MMI	22 - 17
MM5606AN	NSC	95 - 71
MM5614AN	NSC	97 - 87
MM5621AN	NSC	97 - 88
MM5635AN	NSC	90 - 75
MM5740N	NSC	89 - 16
MM5745N	NSC	89 - 13
MM5746N	NSC	89 - 14
MM6215	♦MMI	63 - 24
MM6216	♦MMI	63 - 25
MM6220	♦MMI	59 - 3
MM6221	♦MMI	59 - 4
MM6500#1	♦MMI	22 - 44
MM6500#2	♦MMI	22 - 45
MM6501#1	♦MMI	22 - 18
MM6501#2	♦MMI	22 - 19
MM6505	♦MMI	26 - 57
MM6510	♦MMI	26 - 46
MM11011D	♦NSC	27 - 16
MM11011N	♦NSC	27 - 17
MMI5530J	MMI	25 - 41
MN1001	MATJ	47 - 71
MN1001-1	MATJ	46 - 98
MN1001-2	MATJ	46 - 27
MN1002P	MATJ	46 - 28
MN1003	MATJ	33 - 55
MN1101	MATJ	24 - 34
MN1114	MATJ	23 - 96
MN1200	MATJ	69 - 13
MN2101	MATJ	30 - 27
MN2102	MATJ	38 - 47
MN2111	MATJ	30 - 28
MN2112	MATJ	30 - 29
MN2332	MATJ	81 - 93
MN2716	MATJ	79 - 98
MN2758	MATJ	74 - 63
MN4116	MATJ	54 - 6
MN5020	MATJ	65 - 19
MN5101	MATJ	28 -107
MP132B	PLSB	90 - 1
MP210BE	♦PLSB	100 - 33
MP210BF	♦PLSB	100 - 34
MP212BE	♦PLSB	100 - 38
MP212BF	♦PLSB	100 - 39
MP216BE	♦PLSB	100 - 84
MP216BF	♦PLSB	100 - 85
MP218B	PLSB	98 - 63
MP220BE	♦PLSB	103 - 9
MP220BF	♦PLSB	103 - 10
MP224B	♦PLSB	100 - 94
MP225B	♦PLSB	103 - 64
MP301B#1	♦PLSB	85 -100
MP301B#2	♦PLSB	85 - 96
MP1101	♦PLSB	27 - 37
MP1402	♦PLSB	105 - 96
MP1403	♦PLSB	106 -101
MP1404	♦PLSB	107 - 73
MP1405	♦PLSB	106 - 24
MP1406	PLSB	103 - 74
MP1407	PLSB	103 - 75
MP1506	PLSB	103 - 76
MP1507	PLSB	103 - 77
MP2118-10	ITL	54 -109
MP2118-12	ITL	55 - 6
MP2118-15	ITL	55 - 13
MP2128-15#ai	ITL	44 - 24
MP2128-20#ai	ITL	44 - 28
MP2141-2	ITL	51 - 88
MP2141-3	ITL	51 -104
MP2141-4	ITL	52 - 11
MP2141-5	ITL	52 - 29
MP2141L3	ITL	51 -105
MP2141L4	ITL	52 - 12
MP2141L5	ITL	52 - 30
MP2147HL3	ITL	51 - 68
MP2147HL	ITL	51 - 75
MP2164-15#ai	ITL	56 - 32
MP2164-20#ai	ITL	56 - 43
MP2164-25#ai	ITL	56 - 54
MP2167-10#ai	ITL	55 - 60
MP2167-55#ai	ITL	55 - 36
MP2167-70#ai	ITL	55 - 51
MP2167L70#ai	ITL	55 - 52
MP2186#ai	ITL	53 - 3
MP2187#ai	ITL	53 - 4
MP3409B	♦PLSB	103 - 43
MP3417B	♦PLSB	102 - 96
MP3802	♦PLSB	89 - 15
MP4260D	♦PLSB	33 -101
MP4260N	♦PLSB	33 -102
MP5260D	PLSB	33 - 99
MP5260N	PLSB	33 -100
MP11011	♦PLSB	27 - 18
MRM1A64-80	MMT	58 -100
MRM1B128-80	MMT	59 - 49
MRM1C256-80	MMT	65 - 56
MRM2A128-40	MMT	59 - 48
MRM2B256-40	MMT	65 - 55
MRM2C512-40	MMT	71 - 22
MRM3A256-20	MMT	65 - 54
MRM3B512-20	MMT	71 - 21
MRM3C1024-20	MMT	77 - 2
MRM4A512-10	MMT	71 - 19
MRM4B1024-10	MMT	76 - 85
MRM4C2048-10	MMT	81 - 4
MS109	♦ECV	57 - 4
MS113	♦ECV	57 - 5
MS115	♦ECV	57 - 12
MS116	♦ECV	57 - 6
MS204	♦ECV	57 - 8
MS208	♦ECV	57 - 7
MS612	RTC	102 - 53
MS618	RTC	100 - 95
MS625	RTC	104 - 34
MS4331BC	MITC	101 - 4
MS4331BD	MITC	101 - 5
MSL8515A	OKIJ	58 - 65
MSL8516A	OKIJ	58 - 66
MSM540	♦OKIJ	101 - 96
MSM541	♦OKIJ	98 - 64
MSM542	♦OKIJ	97 - 67
MSM543	♦OKIJ	95 - 13
MSM544	♦OKIJ	101 - 51
MSM573A	OKIJ	29 - 44
MSM2750-1A	OKIJ	65 - 7
MSM2750-2A	OKIJ	65 - 8
MSM3743A	OKIJ	48 - 33
MSM4015	♦OKIJ	94 - 97
MSM4034	♦OKIJ	96 - 71
MSM4061A	♦OKIJ	26 - 97
MSR4	♦WLD	90 -102
MSR8	♦WLD	94 - 66
MTS1001	♦MTY	103 - 78
MTS1002	♦MTY	101 - 10
MTS1008	MTY	58 - 78
MTS1016	♦MTY	103 - 1
MTS1100	MTY	101 - 95
MTS1102	♦MTY	104 - 2
MTS2013	♦MTY	103 -100
MTS2100	♦MTY	106 - 36
MTS2103	♦MTY	101 - 25
MTS2105	♦MTY	102 - 78
MTS2107	♦MTY	104 - 53
MTS2108	♦MTY	104 - 55
MTS3100	♦MTY	107 - 46
MUF5	♦WLD	95 - 83
MW4050D	♦RCA	47 - 72
MW4050DV1	♦RCA	46 - 99
MW4050DV2	♦RCA	46 - 29
MW4051D	RCA	45 - 19
MW4051DV1	RCA	45 - 17
MW4051DV2	RCA	45 - 16
MW4060D	♦RCA	47 - 73
MW4060DV1	♦RCA	46 -100
MW4060DV2	♦RCA	46 - 30
MW4101D	RCA	27 - 72
MW4101DV1	RCA	27 - 69
MW4101DV2	RCA	27 - 66
MW4104D	RCA	45 - 21
MW4104DV1	RCA	45 - 20
MW4104DV2	RCA	45 - 18
MW4111D	RCA	27 - 73
MW4111DV1	RCA	27 - 70
MW4111DV2	RCA	27 - 67
MW4112D	RCA	27 - 74
MW4112DV1	RCA	27 - 71
MW4112DV2	RCA	27 - 68
MW7001ID	♦RCA	36 -104
MW7040D	♦RCA	29 - 56
MWS5001AD	♦RCA	32 - 81
MWS5001D	♦RCA	36 - 21
MWS5001H	♦RCA	36 - 22
MWS5004D	RCA	45 - 22
MWS5040D	RCA	29 - 25
MWS5040H	RCA	29 - 26
MWS5080D	RCA	24 - 7
MWS5101DL1	RCA	29 - 30
MWS5101DL8	RCA	29 - 39
MWS5101EL1	RCA	29 - 31
MWS5101EL8	RCA	29 - 40
MWS5114-5D	♦RCA	39 - 85
MWS5114-5E	♦RCA	39 - 86
MWS5114D1#ai	♦RCA	39 - 73
MWS5114D2#ai	♦RCA	39 - 70
MWS5114D3#ai	♦RCA	39 - 62
MWS5114D	♦RCA	39 - 87
MWS5114E1#ai	♦RCA	39 - 74
MWS5114E2#ai	♦RCA	39 - 71
MWS5114E3#ai	♦RCA	39 - 63
MWS5114E	♦RCA	39 - 88
MWS5114H	♦RCA	39 - 89
MWS5501D	♦RCA	36 - 19
MWS5501H	♦RCA	36 - 20
MWS5540D	♦RCA	29 - 23
MWS5540H	♦RCA	29 - 24
MWS6514A-5D	RCA	39 - 90
MWS6514A-5E	RCA	39 - 91
MWS6514AD	RCA	39 - 92
MWS6514AE	RCA	39 - 93
MXD2201A	♦XIC	39 - 1
MXD2210	♦XIC	23 - 45
MXD2210-1	♦XIC	23 - 46
MXD2212	♦XIC	31 - 52
MXD2212-1	♦XIC	31 - 53
N74LS89F	PHIN	21 - 37
RTCF	SIC	
	VALG	
N74LS89N	PHIN	21 - 38
RTCF	SIC	
	VALG	
N74LS189F	PHIN	21 - 39
RTCF	SIC	
	VALG	
N74LS189N	PHIN	21 - 40
RTCF	SIC	
	VALG	
N74S200B	MULB	24 -110
PHIN	SIC	
N74S201B	MULB	25 - 1
PHIN	SIC	
N74S201F	MULB	25 - 2
PHIN	SIC	
	VALG	
N74S201N	PHIN	25 - 3
SIC	VALG	
N74S301B	MULB	25 - 4
PHIN	SIC	
N74S301R	♦SIC	25 - 5
N82LS180F	SIC	75 - 71
N82LS180N	SIC	75 - 72
N82S16B	MULB	25 - 6
PHIN	SIC	
N82S17B	MULB	25 - 7
PHIN	SIC	
N82S21B	MULB	22 - 92
PHIN	SIC	
N82S23B	MULB	57 -105
PHIN	SIC	
N82S25B	MULB	21 - 81
PHIN	SIC	
N82S25W	none	21 - 82
N82S71B	MULB	94 - 7
PHIN	SIC	
N82S112F	PHIN	20 - 63
SIC	VALG	
N82S112N	PHIN	20 - 64
SIC	VALG	
N82S114F	MULB	64 - 41
PHIN	SIC	
	VALG	
N82S114N	MULB	64 - 42
PHIN	SIC	
	VALG	
N82S116B	MULB	24 - 89
PHIN	SIC	
N82S117B	MULB	24 - 90
PHIN	SIC	
N82S117F	MULB	24 - 91
PHIN	SIC	
	VALG	
N82S117N	PHIN	24 - 92
SIC	VALG	
N82S123B	MULB	57 -106
PHIN	SIC	
N82S126B	MULB	61 - 76
PHIN	SIC	
N82S129B	MULB	61 - 77
PHIN	SIC	
N82S137BR	none	71 - 78
N82S147AG	none	68 - 95
N82S185AI	none	77 - 27
N82S185BI	none	77 - 26
N82S191AI	none	78 - 83
N82S208F	MULB	31 - 78
PHIN	SIC	
N82S226B	MULB	60 - 32
PHIN	SIC	
N82S229B	MULB	60 - 33
PHIN	SIC	
N93L425F	PHIN	34 - 21
	SIC	
N2114-2MA	GTE	42 - 43
N2114-3MA	GTE	42 - 57
N2114-UMA	GTE	41 - 40
N2114-UME	GTE	41 - 41
N2114UMA	GTE	42 - 88
N2420Y#1	MULB	59 - 10
PHIN	SIC	
N2420Y#2	MULB	60 - 60
PHIN	♦SIC	
N2421Y#1	MULB	59 - 11
PHIN	♦SIC	
N2421Y#2	MULB	60 - 61
PHIN	♦SIC	
N2425Y#1	MULB	59 - 12
PHIN	♦SIC	
N2425Y#2	MULB	60 - 62
PHIN	♦SIC	
N2426Y#1	MULB	59 - 13
PHIN	♦SIC	
N2426Y#2	MULB	60 - 63
PHIN	♦SIC	
N2430Y#1	MULB	63 - 55
PHIN	♦SIC	
N2430Y#2	MULB	66 - 45
PHIN	♦SIC	
N2430YCM0000	MULB	88 - 6
PHIN	SIC	
N2431Y#1	MULB	63 - 56
PHIN	♦SIC	
N2431Y#2	MULB	66 - 46
PHIN	♦SIC	
N2435Y#1	MULB	63 - 57
PHIN	♦SIC	
N2435Y#2	MULB	66 - 47
PHIN	♦SIC	
N2436Y#1	MULB	63 - 58
PHIN	♦SIC	
N2436Y#2	MULB	66 - 48
PHIN	♦SIC	
N3101AB	MULB	21 - 72
PHIN	SIC	
N7488R	SIC	57 - 66
N7491Q	SIC	99 - 59
N7494R	SIC	91 - 63
N7496R	SIC	95 - 37
N8206I	SIC	24 - 85
N8207I	SIC	24 - 86
N8223B	MULB	58 - 49
PHIN	SIC	
N8223E	SIC	58 - 50
N8223F	MULB	58 - 51
PHIN	SIC	
N8223W	MULB	58 - 52
PHIN	SIC	
N8224E	SIC	87 - 1
N8224R	SIC	87 - 2
N8225E	SIC	22 - 20
N8225R	SIC	22 - 21
N8226E	SIC	62 - 14
N8229E	SIC	62 - 15
N8270J	SIC	92 - 4
N8271E	SIC	92 - 5
N8271R	SIC	92 - 6
N8273E	SIC	100 - 26
N8273R	SIC	100 - 27
N8274E	SIC	100 - 17
N8274R	SIC	100 - 18
N8277E	SIC	99 -100
N21143MA	GTE	42 - 58
N74164Q	SIC	96 - 98
N74165R	SIC	96 - 84
N74166R	SIC	96 - 99
N74194R	SIC	92 - 78
N74195R	SIC	93 - 50
N74195W	SIC	93 - 51
N74199P	SIC	96 -100
N74199Y	SIC	96 -101
NC1711	NIT	31 - 76
NC6560AL#1	NIT	74 - 12
NC6560AL#2	NIT	77 - 29
NC6560AP#1	NIT	74 - 13
NC6560AP#2	NIT	77 - 30
NC6560L#1	NIT	74 - 16
NC6560L#2	NIT	77 - 31
NC6560P#1	NIT	74 - 17
NC6560P#2	NIT	77 - 32
NC6561L#1	NIT	88 - 26
NC6561L#2	NIT	87 - 50
NC6561L#3	NIT	88 - 79
NC6561L#4	NIT	87 - 70
NC6561L#5	NIT	87 - 84
NC6561L#6	NIT	87 - 7
NC6561P#1	NIT	88 - 27
NC6561P#2	NIT	87 - 51
NC6561P#3	NIT	88 - 80
NC6561P#4	NIT	87 - 71
NC6561P#5	NIT	87 - 85
NC6561P#6	NIT	87 - 8
NC6570AL	♦NIT	86 - 20
NC6570AP	♦NIT	86 - 21
NC6570L	♦NIT	86 - 22
NC6570P	♦NIT	86 - 23
NC6571AL	NIT	85 - 43
NC6571AP	NIT	85 - 44
NC6571L	NIT	85 - 45
NC6571P	NIT	85 - 46
NC6572L	NIT	85 - 47
NC6572P	NIT	85 - 48
NC6573L	NIT	85 - 49
NC6573P	NIT	85 - 50
NC6574L	NIT	85 - 51
NC6574P	NIT	85 - 52
NC6575L	NIT	85 - 53
NC6575P	NIT	85 - 54
NC6576L	NIT	85 - 55
NC6576P	NIT	85 - 56
NC6580L	NIT	85 -110
NC6580P	NIT	86 - 1
NC6581L	NIT	84 - 68
NC6581P	NIT	84 - 69
NC6583L	NIT	84 - 70
NC6583P	NIT	84 - 71
NC6590AL	NIT	78 - 95
NC6590AP	NIT	78 - 96
NC6590L	NIT	78 -103
NC6590P	NIT	78 -104
NC6591#1	NIT	88 - 35
NC6591#2	NIT	87 - 59
NC6591#3	NIT	88 - 97

♦-Mfr's data sheet available in microfilm service

Cur-In current D.A.T.A.BOOK
△-Registered with JEDEC by this manufacturer

Obs-In this book

1. TYPE No. CROSS INDEX

IN TYPE NUMBER SEQUENCE

TYPE No.	MFRS	Pg&Line
NC6591#4	NIT	87 - 80
NC6591#5	NIT	88 - 1
NC6591#6	NIT	87 - 21
NC6591L#1	NIT	88 - 29
NC6591L#2	NIT	87 - 53
NC6591L#3	NIT	88 - 82
NC6591L#4	NIT	87 - 73
NC6591L#5	NIT	87 - 87
NC6591L#6	NIT	87 - 10
NC6591P#1	NIT	88 - 30
NC6591P#2	NIT	87 - 54
NC6591P#3	NIT	88 - 83
NC6591P#4	NIT	87 - 74
NC6591P#5	NIT	87 - 88
NC6591P#6	NIT	87 - 11
NC6591P#7	NIT	84 - 63
NC7010#1	NIT	65 - 69
NC7010#2	NIT	71 - 36
NC7030	♦NIT	104 - 75
NC7033	♦NIT	110 - 13
NC7035	♦NIT	110 - 12
NC7040	♦NIT	58 - 79
NC7050	♦NIT	62 - 59
NC7053L	NIT	58 -103
		110 - 14
NC7053M	NIT	58 -104
NC7053P	NIT	58 -105
		110 - 15
NC7054L	♦NIT	110 - 16
NC7054M	♦NIT	110 - 17
NC7054P	♦NIT	110 - 18
NC7714	NIT	110 - 20
NCM6560AL	NIT	74 - 52
NCM6560AP	NIT	74 - 53
NCM6560BL	NIT	77 - 35
NCM6560BP	NIT	77 - 36
NCM6561L#1	NIT	87 - 68
NCM6561L#2	NIT	87 - 48
NCM6561L#3	NIT	87 - 5
NCM6561L#4	NIT	88 - 24
NCM6561L#6	NIT	87 - 89
NCM6561P#1	NIT	87 - 69
NCM6561P#2	NIT	87 - 49
NCM6561P#3	NIT	87 - 6
NCM6561P#4	NIT	88 - 25
NCM6561P#5	NIT	88 - 85
NCM6571L	NIT	86 - 54
NCM6571P	NIT	86 - 55
NCM6572L	NIT	86 - 56
NCM6573L	NIT	86 - 57
NCM6573P	NIT	86 - 58
NCM6574L	NIT	86 - 59
NCM6574P	NIT	86 - 60
NCM6575L	NIT	86 - 61
NCM6575P	NIT	86 - 62
NCM6576L	NIT	86 - 63
NCM6576P	NIT	86 - 64
NCM6580L	NIT	86 - 52
NCM6580P	NIT	86 - 53
NCM6581L	NIT	84 - 72
NCM6581P	NIT	84 - 73
NCM6583L	NIT	85 - 87
NCM6583P	NIT	85 - 88
NCR2051H	♦NCR	58 - 69
NCR2161	♦NCR	78 - 45
NCR2168	♦NCR	78 - 44
NCR2264-75	♦NCR	82 - 82
NCR2264-100	♦NCR	82 - 83
NCR2811	♦NCR	77 - 24
NCR4485	♦NCR	32 - 45
NMC5295J-1	NSC	53 - 56
NMC6508AJ-9	NSC	35 - 15
NOM101C	PLSB	57 - 1
NOM102C	PLSB	57 - 2
NOM104C	PLSB	57 - 3
NOM201C	♦PLSB	110 - 24
NOM202C	♦PLSB	110 - 25
NOM204C	♦PLSB	110 - 26
NOM301C	♦PLSB	57 - 10
NOM401C	♦PLSB	57 - 11
NVRM1A	none	44 - 29
pM1024#1	PHIL	59 - 36
pM1024#2	PHIL	59 - 37
pM1024A#1	PHIL	59 - 33
pM1024A#2	PHIL	59 - 34
pM1024AC	PHIL	59 - 35
pM1024C	PHIL	58 -106
pMS16x4C	PHIL	22 - 73
pMS256x1C	PHIL	26 - 62
pMS1024C	PHIL	59 - 38
P1101A1	AMD	27 - 19
	ITL	
P1101A	AMD	27 - 38
	ITL	
P1103	ITL	33 - 56
P1103-1	ITL	33 - 24
P1103A1	ITL	33 - 11
P1103A2	ITL	33 - 12
P1103A	ITL	33 - 32
P1302	ITL	63 - 48
P1402A	ITL	105 - 95
P1403A	ITL	106 - 97
P1404A	ITL	107 - 72
P2101	AMD	31 - 15
	ITL	
P2101-2	AMD	30 - 81
	ITL	
P2101A2	ITL	29 - 85
P2101A4	ITL	30 - 30
P2101A	ITL	29 -107
P2101A-2	ITL	29 - 86
P2101A-4	ITL	30 - 31
P2102	AMD	38 - 72
	ITL	

TYPE No.	MFRS	Pg&Line
P2102-1	AMD	38 - 20
	ITL	
P2102-2	AMD	38 - 48
	ITL	
P2102-8	ITL	38 - 80
P2102A2	ITL	37 - 58
P2102A4	ITL	37 - 96
P2102A6	ITL	38 - 49
P2102A	ITL	37 - 74
P2102AL2	ITL	37 - 59
P2102AL4	ITL	37 - 97
P2102AL	ITL	37 - 75
P2104A	ITL	48 - 13
P2104A-1	ITL	45 - 79
P2104A-2	ITL	46 - 31
P2104A-3	ITL	46 -101
P2104A-4	ITL	47 - 74
P2105	ITL	32 - 93
P2105-1	ITL	32 - 86
P2105-2	ITL	32 - 89
P2107A1	ITL	47 - 34
P2107A4	ITL	48 - 14
P2107A5	ITL	48 - 21
P2107A8	ITL	48 - 22
P2107A	ITL	47 - 75
P2107B4	ITL	47 - 28
P2107B6	ITL	48 - 15
P2107B	ITL	46 - 32
P2107C	ITL	46 -102
P2107C-1	ITL	45 - 80
P2107C-2	ITL	46 - 33
P2107C-4	ITL	47 - 76
P2108-2	ITL	52 - 89
P2108-4	ITL	52 - 94
P2111	AMD	31 - 16
	ITL	
P2111-2	AMD	30 - 82
	ITL	
P2111A2	ITL	29 - 87
P2111A4	ITL	30 - 32
P2111A	ITL	29 -108
P2111A-2	ITL	29 - 88
P2111A-4	ITL	30 - 33
P2112	AMD	31 - 17
	ITL	
P2112-2	AMD	30 - 83
	ITL	
P2112A2	ITL	29 - 89
P2112A4	ITL	30 - 34
P2112A	ITL	29 -109
P2112A-2	ITL	29 - 90
P2112A-4	ITL	30 - 35
P2115	ITL	37 - 42
P2115-2	ITL	37 - 12
P2115A	ITL	36 - 94
P2115A-2	ITL	37 - 13
P2115AL	ITL	36 - 95
P2115AL-2	ITL	37 - 14
P2115L	ITL	37 - 43
P2117-2	ITL	54 - 65
P2117-3	ITL	54 - 78
P2117-4	ITL	54 - 92
P2117-5	ITL	54 -103
P2125	ITL	37 - 44
P2125-2	ITL	37 - 15
P2125A	ITL	36 - 96
P2125A-2	ITL	37 - 16
P2125AL	ITL	36 - 97
P2125AL-2	ITL	37 - 17
P2125L	ITL	37 - 45
P2141-2	ITL	49 - 76
P2141-3	ITL	49 - 83
P2141-4	ITL	49 - 77
P2141-5	ITL	50 - 20
P2141L3	ITL	49 - 84
P2141L4	ITL	49 -104
P2141L5	ITL	50 - 21
P2142-2	ITL	40 - 67
P2142-3	ITL	41 - 42
P2142L3	ITL	41 - 43
P2142L	ITL	39 - 35
P2147	ITL	51 - 76
P2147-3	ITL	51 - 69
P2147L	ITL	51 - 77
P2308	ITL	74 - 48
P2316A	ITL	79 - 38
P2316E	ITL	79 - 53
P2332	ITL	82 - 11
P2364	ITL	83 - 21
P2405	ITL	107 - 16
P2416	ITL	109 - 14
P2608	ITL	73 - 34
P3102	ITL	25 - 60
P3102A	ITL	25 - 8
P3106	ITL	25 - 61
P3106-8	ITL	25 - 62
P3106A	ITL	25 - 25
P3107	ITL	25 - 63
P3107-8	ITL	25 - 64
P3107A	ITL	25 - 26
P3301	ITL	60 - 6
P3301A	ITL	59 - 96
P3302	ITL	65 - 74
P3302-4	ITL	65 - 84
P3302-6	ITL	65 - 85
P3322	ITL	65 - 75
P3322-4	ITL	65 - 86
P3322-6	ITL	65 - 87
P5101	ITL	28 - 80
P5101-1	ITL	28 - 51
P5101-3	ITL	28 - 81
P5101-8	ITL	28 -108
P5101L3	ITL	28 - 82
P5101L	ITL	28 - 83

TYPE No.	MFRS	Pg&Line
P5101L-1	ITL	28 - 52
P5101L-3	ITL	28 - 53
P5104-10	ITL	49 - 17
P5104-15	ITL	49 - 19
P5104-20	ITL	49 - 21
PAL2oR6ACJ883B		109 - 63
	none	
PAL16R6MN	MMI	109 - 38
PCD5101A	none	29 - 45
PCD5101A-S1	none	29 - 46
PCD5114D	none	39 -104
PCD5114P	none	39 -105
PD550#1	GESY	44 - 8
PD550#2	GESY	48 -101
QRO256-1	♦QDC	57 - 67
QRO256-9	♦QDC	57 - 68
QRO1024-1	♦QDC	60 - 53
QRO1024-9	♦QDC	60 - 54
R01492C	WDC	77 - 39
R2316BC	RKW	78 - 53
R2316BMT	RKW	78 - 55
R2316EC	RKW	78 - 54
R2316EMT	RKW	78 - 56
R2332-3CMT	RKW	82 - 13
R2332C	RKW	82 - 17
R2332CE	RKW	82 - 18
R2332CMT	RKW	82 - 19
R2332LC	RKW	82 - 67
R2332LCE	RKW	82 - 68
R2332P	RKW	82 - 20
R2332PE	RKW	82 - 21
R8108-3C	RKW	43 - 61
R8108-3P	RKW	43 - 62
R8108-4C	RKW	43 - 64
R8108-4P	RKW	43 - 65
R8108-5C	RKW	43 - 73
R8108-5P	RKW	43 - 74
RA3-4256	GIC	31 - 41
	GTE	
RA3-4256A	♦GIC	31 - 44
RA3-4256B	♦GIC	31 - 45
	GTE	
RA6-4803D	♦GIC	22 - 90
RA6-4803F	♦GIC	22 - 91
RA9-1101A#1	♦GIC	27 - 39
RA9-1101A#2	♦GIC	27 - 40
RA9-1101A1#1	♦GIC	27 - 20
RA9-1101A1#2	♦GIC	27 - 21
RA9-1103A	♦GIC	33 - 66
RA9-1103B	♦GIC	33 - 57
RA9-1103C	♦GIC	33 - 58
RA9-1103D	♦GIC	33 - 38
RA9-1103E	♦GIC	33 - 25
RA9-2000	GIC	43 - 94
RA9-2048	♦GIC	43 - 92
RAM18A#1	GTE	24 - 12
RAM18A#2	GTE	34 - 92
RAM18A#3	GTE	32 - 30
RAM18A#4	GTE	28 - 2
RAM28A#1	GTE	31 - 81
RAM28A#2	GTE	43 -105
RAM28A#3	GTE	39 - 25
RAM28A#4	GTE	32 - 33
RAM29A	GTE	32 - 6
RAM32D	GTE	32 - 12
RAM36D	GTE	32 - 18
RAM48A#1	GTE	32 - 42
RAM48A#2	GTE	48 - 98
RAM48A#3	GTE	44 - 5
RAM48A#4	GTE	39 - 44
RAM49A	GTE	32 - 51
RAM50A	GTE	32 - 57
RAM52D	GTE	32 - 61
RAM56D	GTE	32 - 68
RAM88B#1	GTE	43 - 30
RAM88B#2	GTE	52 - 95
RAM88B#3	GTE	52 - 31
RAM88B#4	GTE	44 - 10
RAM89B	GTE	43 - 82
RAM125-28A#1	♦GTE	31 - 80
RAM125-28A#2	♦GTE	43 -104
RAM125-28A#3	♦GTE	39 - 24
RAM125-28A#4	♦GTE	32 - 32
RAM125-29A	♦GTE	32 - 5
RAM125-32D	♦GTE	32 - 11
RAM125-36D	♦GTE	32 - 17
RAM125-48A#1	♦GTE	32 - 41
RAM125-48A#2	♦GTE	48 - 97
RAM125-48A#3	♦GTE	44 - 4
RAM125-48A#4	♦GTE	39 - 43
RAM125-49A	♦GTE	32 - 50
RAM125-50A	♦GTE	32 - 56
RAM125-52D	♦GTE	32 - 60
RAM125-56D	♦GTE	32 - 67
RAM218A#1	♦GTE	24 - 13
RAM218A#2	♦GTE	34 - 93
RAM218A#3	♦GTE	32 - 31
RAM218A#4	♦GTE	28 - 3
RAM228A#1	GTE	31 - 82
RAM228A#2	GTE	43 -106
RAM228A#3	GTE	39 - 26
RAM228A#4	GTE	32 - 34
RAM229A	GTE	32 - 7
RAM232D	GTE	32 - 13
RAM236D	GTE	32 - 19
RAM248A#1	GTE	32 - 43
RAM248A#2	GTE	48 - 99
RAM248A#3	GTE	44 - 6
RAM248A#4	GTE	39 - 45
RAM249A	GTE	32 - 52
RAM250A	GTE	32 - 58
RAM252D	GTE	32 - 62
RAM256D	GTE	32 - 69
RAM288B#1	GTE	43 - 31

TYPE No.	MFRS	Pg&Line
RAM288B#2	GTE	52 - 96
RAM288B#3	GTE	52 - 32
RAM288B#4	GTE	44 - 11
RAM289B	GTE	43 - 83
RAM328A#1	♦GTE	31 - 83
RAM328A#2	♦GTE	43 -107
RAM328A#3	♦GTE	39 - 27
RAM328A#4	♦GTE	32 - 35
RAM329A	GTE	32 - 8
RAM332D	GTE	32 - 14
RAM336D	GTE	32 - 20
RAM348A#1	GTE	32 - 44
RAM348A#2	GTE	48 -100
RAM348A#3	GTE	44 - 7
RAM348A#4	GTE	39 - 46
RAM349A	GTE	32 - 53
RAM350A	GTE	32 - 59
RAM352D	GTE	32 - 63
RAM356D	GTE	32 - 70
RAM388B#1	GTE	43 - 32
RAM388B#2	GTE	52 - 97
RAM388B#3	GTE	52 - 33
RAM388B#4	GTE	44 - 12
RAM389B	GTE	43 - 84
RBM256	RKW	109 - 21
RC54LS170F	MULB	20 - 33
RC54LS170W	MULB	20 - 34
RC54LS174B	MULB	96 - 20
RC54LS174F	MULB	96 - 21
RC54LS174W	MULB	96 - 22
RC54LS175B	MULB	93 - 52
RC54LS175F	MULB	93 - 53
RC54LS175W	MULB	93 - 54
RC54S194J	MULB	94 - 10
RC54S194W	MULB	94 - 11
RC54S195J	MULB	93 - 55
RC54S195W	MULB	93 - 56
RC54S200F	MULB	25 - 42
RC54S201F	MULB	24 - 39
RC54S301F	MULB	24 - 40
RC82S09I	MULB	23 - 75
RC82S10F	MULB	32 - 79
RC82S10I	MULB	32 - 80
RC82S11F	MULB	34 - 22
RC82S11I	MULB	34 - 84
RC82S16F	MULB	25 - 43
RC82S17F	MULB	25 - 44
RC82S21F	MULB	22 - 93
RC82S23F	MULB	58 - 61
RC82S23N	MULB	58 - 62
RC82S25F	MULB	21 - 97
RC82S100I	MULB	109 - 53
RC82S100N	MULB	109 - 54
RC82S101I	MULB	109 - 55
RC82S101N	MULB	109 - 56
RC82S102I	MULB	109 - 34
RC82S102N	MULB	109 - 35
RC82S103I	MULB	109 - 36
RC82S103N	MULB	109 - 37
RC82S106I	MULB	58 - 75
RC82S107I	MULB	58 - 76
RC82S114F	MULB	64 - 75
RC82S114I	MULB	64 - 76
RC82S114N	MULB	64 - 77
RC82S115F	MULB	70 - 69
RC82S115I	MULB	70 - 70
RC82S115N	MULB	70 - 71
RC82S116F	MULB	24 - 93
RC82S117F	MULB	24 - 94
RC82S123F	MULB	58 - 63
RC82S123N	MULB	58 - 64
RC82S126F	MULB	61 - 78
RC82S129F	MULB	61 - 79
RC82S130F	MULB	67 - 66
RC82S131F	MULB	67 - 67
RC82S136F	MULB	71 - 61
RC82S137F	MULB	72 - 58
RC82S140F	MULB	70 - 90
RC82S140N	MULB	70 - 91
RC82S141F	MULB	70 - 92
RC82S141N	MULB	70 - 93
RC82S180F	MULB	75 - 84
RC82S180N	MULB	75 - 85
RC82S181F	MULB	75 - 86
RC82S181N	MULB	75 - 87
RC82S184F	MULB	78 - 25
RC82S185F	MULB	78 - 26
RC82S190I	MULB	80 - 56
RC82S190N	MULB	80 - 57
RC82S191I	MULB	80 - 58
RC82S191N	MULB	78 - 78
RC82S200I	MULB	58 - 71
RC82S200N	MULB	58 - 72
RC82S201I	MULB	58 - 73
RC82S201N	MULB	58 - 74
RC82S214I	MULB	63 - 8
RC82S215I	MULB	68 - 63
RC82S226F	MULB	60 - 43
RC82S229F	MULB	60 - 44
RC82S230F	MULB	66 - 27
RC82S231F	MULB	65 - 88
RC82S240F	MULB	65 - 89
RC82S240N	MULB	68 - 30
RC82S241F	MULB	68 - 31
RC82S241N	MULB	68 - 32
RC82S280I	MULB	73 - 16
RC82S281I	MULB	73 - 17
RC82S290F	MULB	78 - 32
RC82S290N	MULB	78 - 30
RC82S291F	MULB	78 - 33
RC82S291N	MULB	78 - 31
RC82S2708F	MULB	75 - 88
RC82S2708N	MULB	75 - 89
RC2001K	MULB	100 - 50

TYPE No.	MFRS	Pg&Line
RC2002K	MULB	100 -104
RC2003K	MULB	101 - 11
RC2004K	MULB	101 -101
RC2005K	MULB	104 - 1
RC3101AF	MULB	21 - 83
RC5330M	♦RTN	25 - 84
RC5330MP	♦RTN	25 - 85
RC5340M	♦RTN	25 - 86
RC5340MP	♦RTN	25 - 87
RC5491A	MULB	99 - 82
RC5491F	MULB	99 - 83
RC5491W	MULB	99 - 84
RC5494B	MULB	94 - 55
RC5494F	MULB	94 - 56
RC5494W	MULB	94 - 57
RC5495A	MULB	92 - 79
RC5495F	MULB	92 - 80
RC5496B	MULB	95 - 38
RC5496F	MULB	95 - 39
RC5496W	MULB	95 - 40
RC5500M	♦RTN	34 - 55
RC5500MP	♦RTN	34 - 56
RC8200N	MULB	95 - 50
RC8200Q	MULB	95 - 51
RC8201F	MULB	95 - 52
RC8201N	MULB	95 - 53
RC8201Q	MULB	95 - 54
RC8202F	MULB	100 - 21
RC8202N	MULB	100 - 22
RC8202Q	MULB	100 - 23
RC8203F	MULB	100 - 24
RC8203N	MULB	100 - 25
RC9300B	MULB	92 - 7
RC10144	♦RTN	24 - 59
RC10144M	RTN	24 - 49
RC10144MP	RTN	24 - 50
RC54164A	MULB	99 - 2
RC54164F	MULB	99 - 3
RC54165B	MULB	96 - 85
RC54165F	MULB	96 - 86
RC54165W	MULB	96 - 87
RC54166B	MULB	96 -102
RC54166F	MULB	96 -103
RC54166W	MULB	96 -104
RC54170B	MULB	20 - 26
		90 - 6
RC54170F	MULB	20 - 27
		90 - 7
RC54170W	MULB	20 - 28
		90 - 8
RC54178A	MULB	92 - 8
RC54178F	MULB	92 - 9
RC54178W	MULB	92 - 10
RC54179B	MULB	92 - 11
RC54179F	MULB	92 - 12
RC54179W	MULB	92 - 13
RC54194B	MULB	92 - 81
RC54194F	MULB	92 - 82
RC54194W	MULB	92 - 83
RC54195B	MULB	93 - 57
RC54195F	MULB	93 - 58
RC54195W	MULB	93 - 59
RC54198F	MULB	96 -105
RC54198N	MULB	96 -106
RC54198Q	MULB	96 -107
RC54199F	MULB	96 -108
RC54199N	MULB	96 -109
RC54199Q	MULB	96 -110
RC95410	RTN	24 - 60
RCD10241	RKW	109 - 23
RCP3271B	MULB	91 - 64
RCP8200F	MULB	95 - 55
RCP9300E	MULB	92 - 14
RCT10241	RKW	109 - 27
RD05D	AMI	101 - 91
RD05G	AMI	101 - 92
RD07C	AMI	101 - 97
RD07F	AMI	101 - 98
RD10C	AMI	101 - 99
RD10F	AMI	101 -100
RD12C	♦AMI	101 - 93
RD12F	♦AMI	101 - 94
RD13G	♦AMI	102 -104
RD15D	AMI	105 - 9
RD15G	AMI	105 - 10
RD55D	♦AMI	101 - 85
RD55G	♦AMI	101 - 86
RD63G	♦AMI	102 -105
RD65D	♦AMI	105 - 7
RD65G	♦AMI	105 - 8
RD803	MON	94 - 72
RD804	MON	94 - 96
RD806	MON	96 - 47
RFD10241	RKW	109 - 25
RH803	MON	94 - 65
RH804	MON	94 - 78
RH806	MON	96 - 46
RI10144M	♦RTN	24 - 51
RL80D	♦RTN	20 - 35
RL80K	♦RTN	20 - 36
RL81D	♦RTN	20 - 37
RL81K	♦RTN	20 - 38
RL82D	♦RTN	20 - 39
RL82K	♦RTN	20 - 40
RL83D	♦RTN	20 - 41
RL83K	♦RTN	20 - 42
RM15	ECV	57 - 9
RM15Y	ECV	57 - 13
RM32	ECV	57 - 14
RM53L	AMI	32 - 23
RM256#1	♦ECV	57 - 22
RM256#2	♦ECV	59 - 57
RM256#3	♦ECV	58 -102
RM256#4	♦ECV	58 - 81

♦-Mfr's data sheet available in microfilm service

Cur-In current D.A.T.A.BOOK
Δ-Registered with JEDEC by this manufacturer

Obs-In this book

1. TYPE No. CROSS INDEX

IN TYPE NUMBER SEQUENCE

TYPE No.	MFRS	Pg&Line
RM256#5	♦ECV	58 - 68
RM256A#1	ECV	59 - 56
RM256A#2	ECV	58 -101
RM256A#3	ECV	58 - 80
RM256A#4	ECV	58 - 67
RM256A#5	ECV	57 - 21
RM1701G	♦WDC	47 - 77
RM1701H	♦WDC	47 - 78
RM4096J3	♦WDC	46 - 34
RM4096J6	♦WDC	46 -103
RM4096J11	♦WDC	48 - 16
RM4096J16	♦WDC	47 - 79
RM5330L	♦RTN	25 - 88
RM5330M	♦RTN	25 - 89
RM5340L	♦RTN	25 - 90
RM5340M	♦RTN	25 - 91
RM5500L	♦RTN	34 - 57
RM5500M	♦RTN	34 - 58
RO1-2048#1	GIC	77 - 7
RO1-2048#2	GIC	71 - 38
RO1-2048#3	GIC	66 - 43
RO1-2048#4	GIC	63 - 53
RO1-2048S#1	GIC	63 - 84
RO1-2048S#2	GIC	66 - 73
RO1-2240	♦GIC	84 - 5
RO1-8192	GIC	77 - 22
RO3-2516	♦GTE	84 - 46
RO3-2560	♦GIC	68 - 14
	♦GTE	
RO3-4096	♦GIC	68 -109
	♦GTE	
RO3-5120	GIC	71 - 14
	GTE	
RO3-8316	♦GTE	79 - 43
RO3-8316A	GIC	79 - 44
	♦GTE	
RO3-8316B	GIC	79 - 40
RO3-9364B	GIC	83 - 19
RO3-16384	GIC	81 - 22
	♦GTE	
RO3-20480	GIC	81 - 3
RO5-1302	GIC	63 - 50
RO5-2240S	♦GIC	84 - 42
RO5-5184	♦GIC	84 - 58
RO5-8192	GIC	77 - 23
RO6-1024/4	GIC	60 - 58
RO6-1024/8	GIC	59 - 8
RO6-2048/4	GIC	66 - 41
RO6-2048/8	GIC	63 - 51
RO6-2048S#1	GIC	65 - 13
RO6-2048S#2	GIC	67 -105
RO7-1024/4	GIC	60 - 59
RO7-1024/8	GIC	59 - 9
RO7-2048/4	GIC	66 - 42
RO7-2048/8	GIC	63 - 52
RO7-2048S#1	GIC	65 - 14
RO7-2048S#2	GIC	67 -106
ROM2316E#ai	SMC	78 - 50
RPD10241	RKW	109 - 24
RR5100#1	RTN	22 - 46
RR5100#2	RTN	22 - 47
RR5100D	RTN	22 - 48
RR5100K	RTN	22 - 49
RR5101#1	RTN	22 - 50
RR5101#2	RTN	22 - 51
RR5102#1	RTN	22 - 52
RR5102#2	RTN	22 - 53
RR5102D	RTN	22 - 54
RR5102K	RTN	22 - 55
RR5103#1	RTN	22 - 56
RR5103#2	RTN	22 - 57
RR5300L-PR	RTN	26 - 47
RR5300MM-PR	RTN	26 - 48
RR5302MM-PR	RTN	26 - 49
RR5302MP-PR	RTN	26 - 50
RR5330-PR	RTN	24 - 41
RR5332-PR	RTN	24 - 42
RR5340-PR	RTN	24 - 43
RR5342-PR	RTN	24 - 44
RR5402-PR	RTN	none
Repl.by RC10144	Obs.	
RR5412-PR	RTN	none
Repl.by RC95410	Obs.	
RR5500L-PR	RTN	34 - 65
RR5500MM-PR	RTN	34 - 66
RR5502MM-PR	RTN	34 - 67
RR6100	♦RTN	22 - 58
RS2-32	♦ITTG	101 - 32
RS03G	♦AMI	101 - 63
RS53G	♦AMI	101 - 64
RSA10241	RKW	109 - 26
RT801	MON	94 - 74
RT802	MON	95 - 2
RT807	MON	99 - 85
RT808	MON	98 - 80
RT809	MON	101 - 6
RT813	MON	100 - 90
S54LS89F	PHIN	21 - 41
RTCF	SIC	
	VALG	
S54LS189F	PHIN	21 - 42
RTCF	SIC	
	VALG	
S54S174F	RTCF	96 - 36
S54S189W	none	22 - 22
S54S194F	RTCF	94 - 20
S54S200F	MULB	25 - 45
PHIN	SIC	
	VALG	
S54S201F	MULB	25 - 46
PHIN	SIC	
	VALG	
S54S350F	RTCF	90 - 31
S54S350W	RTCF	90 - 32

TYPE No.	MFRS	Pg&Line
S54S373F	RTCF	97 - 56
S54S374F	RTCF	97 - 57
S82LS10F	PHIN	34 - 29
	SIC	
S82LS11F	PHIN	34 - 30
	SIC	
S82LS180F	SIC	75 - 74
S82LS181N	VALG	75 - 73
S82S09N	SIC	23 - 77
	VALG	
S82S10F	MULB	34 - 23
PHIN	SIC	
	VALG	
S82S10I	MULB	34 - 85
PHIN	SIC	
S82S10N	SIC	34 - 31
	VALG	
S82S11F	MULB	34 - 24
PHIN	SIC	
	VALG	
S82S11I	MULB	34 - 86
PHIN	SIC	
S82S11N	SIC	34 - 32
	VALG	
S82S17N	SIC	25 - 47
	VALG	
S82S115N	MULB	70 - 72
PHIN	SIC	
	VALG	
S82S116N	SIC	24 - 95
S82S137N	VALG	72 - 96
S82S140N	MULB	70 - 94
PHIN	SIC	
	VALG	
S82S141N	VALG	70 - 73
S82S146F	SIC	69 -102
S82S181AI	none	74 - 1
S82S184I	PHIN	78 - 18
SIC	VALG	
S82S185AR	none	77 - 28
S82S190I	MULB	80 - 59
PHIN	SIC	
	VALG	
S82S191AI	none	78 - 84
S82S200I	MULB	109 - 39
PHIN	SIC	
	VALG	
S82S201I	MULB	109 - 40
PHIN	SIC	
	VALG	
S82S212N	none	32 - 3
S82S290N	MULB	78 - 77
PHIN	SIC	
S146	AMI	33 - 33
S1103	♦AMI	33 - 59
S1103-1	♦AMI	33 - 26
S1103A1-1P	AMI	33 - 13
S1103A1-2P	AMI	33 - 14
S1103A-1P	AMI	33 - 34
S1103A-2P	AMI	33 - 35
S1103AX-1P	AMI	33 - 5
S1103AX-2P	AMI	33 - 6
S1103X-1P	AMI	33 - 3
S1103X-2P	AMI	33 - 4
S1463	♦AMI	102 - 80
S1670	♦AMI	104 - 16
S1685	♦AMI	106 - 6
S1687	♦AMI	107 - 21
S1694	AMI	96 - 59
S1701	♦AMI	106 - 60
S1705	♦AMI	105 - 46
S1708	♦AMI	101 - 65
S1709	♦AMI	100 - 2
S1709L	AMI	100 - 1
S1723	♦AMI	105 - 47
S1724	♦AMI	105 -109
S2103	♦AMI	33 - 60
S2114-1CC	♦AMI	42 - 98
S2114-1PC	♦AMI	42 - 99
S2114-2CB	GTE	42 - 44
S2114-2CC	♦AMI	42 -107
S2114-2CE#mil	GTE	42 - 45
S2114-2PC	♦AMI	42 -108
S2114-3CB	GTE	42 - 59
S2114-3CC	♦AMI	43 - 8
S2114-3CE#mil	GTE	42 - 60
S2114-3PC	♦AMI	43 - 9
S2114A1CC	♦AMI	42 -100
S2114A1PC	♦AMI	42 -101
S2114A2CC	♦AMI	42 -109
S2114A2PC	♦AMI	42 -110
S2114A3CC	♦AMI	43 - 10
S2114A3PC	♦AMI	43 - 11
S2114H	♦AMI	42 - 94
S2114L1CC	♦AMI	42 -102
S2114L1PC	♦AMI	42 -103
S2114L2CC	♦AMI	43 - 1
S2114L2PC	♦AMI	43 - 2
S2114L3CC	♦AMI	43 - 12
S2114L3PC	♦AMI	43 - 13
S2114UCB	GTE	42 - 89
S2114UCE#mil	GTE	42 - 90
S2146	♦AMI	33 - 36
S2147	♦AMI	51 - 78
S2147-3	♦AMI	51 - 70
S2182	AMI	103 - 46
S2182A	♦AMI	103 - 51
S2183	AMI	103 - 56
S2183A	♦AMI	103 - 57
S2184	AMI	104 - 82
S2184A	♦AMI	104 - 83
S2185	AMI	104 - 90
S2185A	♦AMI	104 - 91
S2222	♦AMI	32 - 27

TYPE No.	MFRS	Pg&Line
S2222A-1U	♦AMI	32 - 28
S2222A-2H	♦AMI	32 - 29
S2332	AMI	81 - 91
S2566	♦AMI	109 - 75
S3102	♦AMI	38 - 73
S3102A	♦AMI	37 - 98
S3102B	♦AMI	38 - 50
S3103	AMI	33 - 27
S3514-1W	♦AMI	69 - 21
S3514-2L	♦AMI	69 - 22
S3630A1C	AMI	83 - 58
S3630A1D	AMI	83 - 59
S3630A1P	AMI	83 - 60
S3630AC	AMI	83 - 52
S3630AD	AMI	83 - 53
S3630AP	AMI	83 - 54
S3630B1C	AMI	83 - 61
S3630B1D	AMI	83 - 62
S3630B1P	AMI	83 - 63
S3630BC	AMI	83 - 55
S3630BD	AMI	83 - 56
S3630BP	AMI	83 - 57
S4006	♦AMI	39 - 7
S4006C	AMI	33 - 74
S4006LC	AMI	33 - 75
S4006R	AMI	39 - 8
S4008	♦AMI	33 - 78
S4008-9	♦AMI	33 - 83
S4008C	♦AMI	33 - 79
S4008LC	♦AMI	33 - 80
S4008R	♦AMI	33 - 81
S4015-2	AMI	36 -105
S4015-2E	AMI	37 - 46
S4015-3	AMI	36 - 98
S4015-4	AMI	36 - 99
S4016/2114	AMI	39 - 30
S4017	♦AMI	51 - 79
S4017-1	♦AMI	45 - 6
S4017-2	♦AMI	45 - 3
S4017-3	♦AMI	44 -110
S4017-4	♦AMI	45 - 1
S4025-2	AMI	36 -106
S4025-2E	AMI	37 - 47
S4025-3	AMI	36 -100
S4025-4	AMI	36 -101
S4028-2	AMI	44 - 93
S4028-3	AMI	44 - 94
S4216B	♦AMI	79 - 45
S4264	AMI	83 - 29
S4264C	AMI	83 - 23
S4264C#ai	AMI	83 - 12
S4264D	AMI	83 - 24
S4264D#ai	AMI	83 - 13
S4264P	AMI	83 - 25
S4264P#ai	AMI	83 - 14
S4532	♦AMI	81 - 7
S4716	♦AMI	80 -101
S5101	♦AMI	29 - 47
S5101-1	AMI	29 - 41
S5101-1C	AMI	28 - 84
S5101-2C	AMI	28 - 85
S5101-3	AMI	29 - 48
S5101-8	AMI	29 - 50
S5101-8C	AMI	28 -109
S5101-8E	AMI	28 -110
S5101-8P	AMI	29 - 1
S5101L1-1C	AMI	28 - 54
S5101L1-2C	AMI	28 - 55
S5101L2-1C	AMI	28 - 56
S5101L2-2C	AMI	28 - 57
S5101L3	AMI	29 - 49
S5101L3-1C	AMI	28 - 86
S5101L3-2C	AMI	28 - 87
S5101L3C	AMI	28 - 88
S5101L3CI	AMI	28 - 89
S5101L3CM	AMI	28 - 90
S5101L3E	AMI	28 - 91
S5101L3EI	AMI	28 - 92
S5101L3P	AMI	28 - 93
S5101L3PI	AMI	28 - 94
S5101L8	AMI	29 - 51
S5101L8C	AMI	29 - 2
S5101L8E	AMI	29 - 3
S5101L8P	AMI	29 - 4
S5101L-1C	AMI	28 - 95
S5101L-2C	AMI	28 - 58
S5103	♦AMI	32 - 97
S5204A	♦AMI	70 -110
S5204A-3L	♦AMI	71 - 1
S5232-1W#1	♦AMI	69 - 23
S5232-1W#2	♦AMI	71 - 83
S5232-2L#1	♦AMI	69 - 24
S5232-2L#2	♦AMI	71 - 84
S5491Q	SIC	99 - 60
S5494E	SIC	91 - 65
S5494R	SIC	91 - 66
S5496E	SIC	95 - 41
S5496R	SIC	95 - 42
S6501-8	AMI	29 - 5
S6501-8C	AMI	29 - 6
S6501-8D	AMI	29 - 7
S6501-8P	AMI	29 - 8
S6501L3	AMI	28 - 96
S6501L3C	AMI	28 - 97
S6501L3D	AMI	28 - 98
S6501L3P	AMI	28 - 99
S6501L8	AMI	29 - 9
S6501L8C	AMI	29 - 10
S6501L8D	AMI	29 - 11
S6501L8P	AMI	29 - 12
S6504	AMI	52 - 34
S6504C#ai	AMI	44 -108
S6504D	AMI	49 - 4
S6504P#ai	AMI	49 - 5

TYPE No.	MFRS	Pg&Line
S6508	♦AMI	36 - 46
S6508-1	♦AMI	36 - 31
S6508-1C	AMI	35 - 64
S6508-1CI	AMI	35 - 65
S6508-1CM	AMI	35 - 66
S6508-1E	AMI	35 - 67
S6508-1EI	AMI	35 - 68
S6508-1P	AMI	35 - 69
S6508-1PI	AMI	35 - 70
S6508-2E	♦AMI	36 - 47
S6508-4E	♦AMI	36 - 48
S6508A1	♦AMI	37 - 48
S6508A	♦AMI	36 - 49
S6508A-1	♦AMI	36 - 28
S6508A-2E	♦AMI	36 - 32
S6508A-4E	♦AMI	36 - 33
S6508AC	AMI	35 - 34
S6508ACI	AMI	35 - 35
S6508ACM	AMI	35 - 36
S6508AE	AMI	35 - 37
S6508AEI	AMI	35 - 38
S6508AP	AMI	35 - 39
S6508API	AMI	35 - 40
S6508C	AMI	35 -108
S6508CI	AMI	35 - 71
S6508CM	AMI	35 - 72
S6508E	AMI	35 -109
S6508EI	AMI	35 - 73
S6508P	AMI	36 - 1
S6508PI	AMI	35 - 74
S6518	♦AMI	36 - 2
S6518-1	♦AMI	35 - 75
S6518A	♦AMI	36 - 3
S6518A-1	♦AMI	35 - 48
S6605	♦AMI	46 - 51
S6605A	♦AMI	47 - 80
S6605B	♦AMI	48 - 23
S6606	♦AMI	45 - 86
S6606A	♦AMI	47 - 9
S6810A	♦AMI	24 - 29
S6810A-1	♦AMI	24 - 24
S6831	AMI	79 - 13
S6831A	♦AMI	79 - 14
S6831B	♦AMI	79 - 15
S6831BC	AMI	79 - 16
S6831BCI	AMI	79 - 17
S6831BD	AMI	79 - 18
S6831BDI	AMI	79 - 19
S6831BP	AMI	79 - 20
S6831BPI	AMI	79 - 21
S6831C	AMI	79 - 22
S6834	♦AMI	71 - 4
S6834-1	♦AMI	71 - 5
S8204Y	SIC	63 - 21
S8205Y	SIC	68 - 78
S8206I	SIC	24 - 87
S8207I	SIC	24 - 88
S8223B	MULB	58 - 53
PHIN	SIC	
S8223E	SIC	58 - 54
S8223F	MULB	58 - 55
PHIN	SIC	
S8223W	MULB	58 - 56
PHIN	SIC	
S8224E	SIC	87 - 3
S8224R	SIC	87 - 4
S8225B	SIC	22 - 23
S8225E	SIC	22 - 24
S8225R	SIC	22 - 25
S8226E	SIC	62 - 16
S8228I	SIC	71 - 77
S8229E	SIC	62 - 17
S8270J	SIC	92 - 15
S8271E	SIC	92 - 16
S8271R	SIC	92 - 17
S8273E	SIC	100 - 28
S8273R	SIC	100 - 29
S8274E	SIC	100 - 19
S8274R	SIC	100 - 20
S8327	♦AMI	84 - 4
S8452	♦AMI	60 - 88
S8453	♦AMI	66 - 74
S8457#1	♦AMI	59 - 44
S8457#2	♦AMI	88 - 84
S8499#1	♦AMI	65 - 58
S8499#2	♦AMI	85 - 82
S8501	♦AMI	65 - 26
S8502	♦AMI	62 - 90
S8539#1	♦AMI	59 - 45
S8539#2	♦AMI	87 - 75
S8564#1	♦AMI	71 - 24
S8564#2	♦AMI	84 - 85
S8564A	♦AMI	84 - 86
S8614#1	♦AMI	65 - 27
S8614#2	♦AMI	68 - 15
S8614#3	♦AMI	84 - 82
S8771#1	♦AMI	109 - 90
S8771#2	♦AMI	109 - 94
S8771A	♦AMI	109 - 91
S8771B	♦AMI	109 - 4
S8771D	♦AMI	84 - 50
S8772#1	♦AMI	109 - 92
S8772#2	♦AMI	109 - 93
S8773#1	♦AMI	65 - 28
S8773#2	♦AMI	68 - 16
S8773#3	♦AMI	109 - 88
S8773A	♦AMI	109 - 89
S8773B	♦AMI	84 - 93
S8829#1	♦AMI	109 - 5
S8829#2	♦AMI	109 - 6
S8865	♦AMI	77 - 21
S8866	♦AMI	84 - 83
S8890	AMI	109 - 73
S8996#1	♦AMI	81 - 26

TYPE No.	MFRS	Pg&Line
S8996#2	♦AMI	81 - 27
S9021	♦AMI	89 - 3
S9660	AMI	109 - 74
S9996#1	♦AMI	79 - 70
S9996#2	♦AMI	79 - 71
S23128C#ai	AMI	83 - 49
S23128D#ai	AMI	83 - 50
S23128P#ai	AMI	83 - 51
S40152-2H	AMI	37 - 18
S40252-2H	AMI	37 - 19
S51011-1C	AMI	28 - 59
S51011-2C	AMI	28 - 60
S51012-1C	AMI	28 - 61
S51012-2C	AMI	28 - 62
S51013-1C	AMI	28 -100
S51013-2C	AMI	28 -101
S51018-1C	AMI	29 - 13
S51018-2C	AMI	29 - 14
S54164Q	SIC	97 - 1
S54165E	SIC	96 - 88
S54165R	SIC	96 - 89
S54166E	SIC	97 - 2
S54166R	SIC	97 - 3
S54194E	SIC	92 - 84
S54194R	SIC	92 - 85
S54195E	SIC	93 - 60
S54195R	SIC	93 - 61
S54198P	SIC	97 - 4
S54198Y	SIC	97 - 5
S54199P	SIC	97 - 6
S54199Y	SIC	97 - 7
S67401J16	MMI	95 - 11
S67401N16	MMI	95 - 12
S68332	♦AMI	82 - 22
S68332C	AMI	81 -107
S68332CI	AMI	81 -108
S68332D	AMI	81 -109
S68332DI	AMI	82 - 1
S68332P	AMI	82 - 2
S68332PI	AMI	82 - 3
S68364	♦AMI	82 - 99
SAB2102	♦SIEG	38 - 74
SAB2102-1	♦SIEG	38 - 21
SAB2808	♦SIEG	76 - 29
SAB8316	♦SIEG	79 - 47
SAB8332	SIEG	81 - 90
SAB8716	♦SIEG	80 - 92
SBB2016-1	none	44 - 91
SBB2016-2	none	44 - 92
SBB2114LP20	none	42 - 46
SBB2114LP25	none	42 - 50
SBB2114LP30	none	42 - 61
SBB2114LP45	none	42 - 91
SBB2147HD1	none	50 - 80
SBB2147HD2	none	50 - 83
SBB2147HD3	none	50 - 90
SBB2147HD4	none	50 - 91
SBB2147HP1	none	50 - 81
SBB2147HP2	none	50 - 84
SBB2147HP3	none	50 - 92
SBB2147HP4	none	50 - 93
SBB2616A	none	79 - 46
SBB2616D	none	79 - 54
SBB2616E	none	79 - 55
SBB2616P	none	79 - 56
SBB2616PI	none	79 - 57
SBB2632A	none	82 - 14
SBB2632D	none	82 - 23
SBB2632E	none	82 - 24
SBB2632P	none	82 - 25
SBB2633A	none	82 - 15
SBB2633D	none	82 - 26
SBB2633E	none	82 - 27
SBB2633P	none	82 - 28
SBB2664A	none	83 - 22
SBB2664D	none	83 - 26
SBB2664E	none	83 - 27
SBB2664P	none	83 - 28
SBB23128	none	83 - 64
SCL4006ABC	SSS	95 - 66
SCL4006AC	SSS	95 - 72
SCL4006AD	♦SSS	95 - 73
SCL4006AE	♦SSS	95 - 74
SCL4006AF	♦SSS	95 - 75
SCL4006AH	♦SSS	95 - 76
SCL4006BD	♦SSS	90 - 2
SCL4006BE	♦SSS	90 - 3
SCL4006BF	♦SSS	90 - 4
SCL4006BH	SSS	90 - 5
SCL4014AC	SSS	98 - 8
SCL4014AD	♦SSS	98 - 9
SCL4014AE	♦SSS	98 - 10
SCL4014AF	♦SSS	98 - 11
SCL4014AH	♦SSS	98 - 12
SCL4014BD	SSS	97 - 95
SCL4014BE	SSS	97 - 96
SCL4014BF	SSS	97 - 89
SCL4015AC	SSS	94 - 98
SCL4015AD	♦SSS	94 - 99
SCL4015AE	♦SSS	94 -100
SCL4015AF	♦SSS	94 -101
SCL4015AH	♦SSS	94 -102
SCL4015BD	SSS	94 - 88
SCL4015BE	SSS	94 - 89
SCL4015BF	SSS	94 - 90
SCL4021AC	♦SSS	98 - 13
SCL4021AD	♦SSS	98 - 14
SCL4021AE	♦SSS	98 - 15
SCL4021AF	♦SSS	98 - 16
SCL4021AH	♦SSS	98 - 17
SCL4021BD	SSS	98 - 18
SCL4021BE	SSS	98 - 19
SCL4021BF	SSS	98 - 20
SCL4034AH	♦SSS	96 - 72

♦-Mfr's data sheet available in microfilm service

Cur-In current D.A.T.A.BOOK
Obs-In this book
Δ-Registered with JEDEC by this manufacturer

1. TYPE No. CROSS INDEX

IN TYPE NUMBER SEQUENCE

TYPE No.	MFRS	Pg&Line
SCL4034BD	SSS	96 - 65
SCL4034BE	♦SSS	96 - 66
SCL4034BH	SSS	96 - 67
SCL4034D	SSS	96 - 73
SCL4035ABC	♦SSS	96 - 74
SCL4035ABD	♦SSS	91 - 17
SCL4035ABE	♦SSS	96 - 75
SCL4035ABF	♦SSS	91 - 18
SCL4035ABHN	♦SSS	91 - 19
SCL4035AF	♦SSS	91 - 20
SCL4035AH	♦SSS	91 - 21
SCL4035BD	SSS	90 - 97
SCL4035BE	SSS	90 - 98
SCL4035BF	SSS	90 - 99
SCL4042BC	SSS	90 - 60
SCL4042BD	SSS	90 - 61
SCL4042BE	SSS	90 - 62
SCL4042BF	SSS	90 - 63
SCL4042BHN	SSS	90 - 64
SCL4076BC	SSS	91 - 39
SCL4076BD	SSS	91 - 40
SCL4076BE	SSS	91 - 41
SCL4076BF	SSS	91 - 42
SCL4076BHN	SSS	91 - 43
SCL4094BD	SSS	100 - 3
SCL4094BE	SSS	98 - 67
SCL4094BF	SSS	100 - 4
SCL5132H	♦SSS	102 - 42
SCL5132T	♦SSS	102 - 43
SCL5136D	♦SSS	102 - 44
SCL5136F	♦SSS	102 - 45
SCL5136H	♦SSS	102 - 46
SCL5136T	♦SSS	102 - 47
SCL5151F	♦SSS	104 - 67
SCL5151FB	♦SSS	104 - 68
SCL5171D	♦SSS	104 - 24
SCL5171F	♦SSS	104 - 25
SCL5171H	♦SSS	104 - 26
SCL5171T	♦SSS	104 - 27
SCL5172D	♦SSS	104 - 63
SCL5172F	♦SSS	104 - 64
SCL5172H	♦SSS	104 - 65
SCL5172T	♦SSS	104 - 66
SCL5408D	♦SSS	96 - 60
SCL5408F	♦SSS	96 - 61
SCL5408H	♦SSS	96 - 62
SCL5533D	♦SSS	109 - 10
SCL5533H	♦SSS	109 - 11
SCL5553	♦SSS	26 - 95
SCL5553D	♦SSS	26 - 63
SCL5553F	♦SSS	26 - 64
SCL5553H	♦SSS	26 - 65
SCL5555D	♦SSS	23 - 41
SCL5555E	♦SSS	23 - 42
SCL5555H	♦SSS	23 - 43
SCL5710	♦SSS	32 -104
SCL51360F	SSS	102 - 31
SCL51360T	SSS	102 - 32
SCL51362F	SSS	102 - 33
SCL51362T	SSS	102 - 34
SCL51380F	SSS	102 - 48
SCL51380T	SSS	102 - 49
SCL51382F	SSS	102 - 50
SCL51382T	SSS	102 - 51
SCM21C02-1AC	♦SSS	36 - 34
SCM21C02-1AD	♦SSS	36 - 35
SCM21C02-1AE	♦SSS	36 - 36
SCM21C02-1AH	♦SSS	36 - 37
SCM21C02-1C	♦SSS	36 - 41
SCM21C02-1D	♦SSS	36 - 42
SCM21C02-1E	♦SSS	36 - 43
SCM21C02-1H	♦SSS	36 - 44
SCM21C02-3C	♦SSS	36 - 55
SCM21C02-3E	♦SSS	36 - 56
SCM21C02-3H	♦SSS	36 - 57
SCM21C02-8C	♦SSS	36 - 59
SCM21C02-8D	♦SSS	36 - 60
SCM21C02-8E	♦SSS	36 - 61
SCM21C02-8H	♦SSS	36 - 62
SCM21C14-1D	♦SSS	39 - 54
SCM21C14-1E	♦SSS	39 - 55
SCM21C14-1H	♦SSS	39 - 56
SCM21C14-2D	♦SSS	39 - 57
SCM21C14-2E	♦SSS	39 - 58
SCM21C14-3C	♦SSS	39 - 59
SCM21C14-3E	♦SSS	39 - 60
SCM21C14-3H	♦SSS	39 - 61
SCM21C14-4D	♦SSS	39 - 64
SCM21C14-4E	♦SSS	39 - 65
SCM21C14-4H	♦SSS	39 - 66
SCM23C32D	♦SSS	82 - 69
SCM23C32E	♦SSS	82 - 70
SCM23C32H	♦SSS	82 - 71
SCM23C33D	♦SSS	82 - 72
SCM23C33E	♦SSS	82 - 73
SCM23C33H	♦SSS	82 - 74
SCM23C34C	SSS	82 - 75
SCM23C34D	SSS	82 - 76
SCM23C34E	SSS	82 - 77
SCM23C34H	SSS	82 - 78
SCM23C64D	♦SSS	83 - 37
SCM23C64E	♦SSS	83 - 38
SCM23C64H	♦SSS	83 - 39
SCM23C65D	♦SSS	83 - 40
SCM23C65E	♦SSS	83 - 41
SCM23C65H	♦SSS	83 - 42
SCM23C128C	♦SSS	83 - 65
SCM23C128D	♦SSS	83 - 66
SCM23C128E	♦SSS	83 - 67
SCM23C128H	♦SSS	83 - 68
SCM5101C	SSS	29 - 33
SCM5102-1	♦SSS	36 - 45
SCM5102-1A	♦SSS	36 - 38
SCM5102-3	♦SSS	36 - 58
SCM5102-8	♦SSS	36 - 63
SCM5114-1	♦SSS	39 - 75
SCM5114-3	♦SSS	39 - 76
SCM5114-5	♦SSS	39 - 81
SCM5114-8	♦SSS	39 - 82
SCM5316	♦SSS	78 - 85
SCM5317	SSS	80 -104
SCM5522C	♦SSS	32 - 24
SCM5522D	♦SSS	32 - 25
SCM5522H	♦SSS	32 - 26
SCM5532	SSS	82 - 80
SCM5533D	♦SSS	109 - 12
SCM5533H	SSS	109 - 13
SCM5534	SSS	82 - 79
SCM5555C	SSS	23 - 37
SCM5555D	SSS	23 - 38
SCM5555E	SSS	23 - 39
SCM5555H	SSS	23 - 40
SCM5589C	SSS	22 - 74
SCM5589E	SSS	22 - 75
SCM5589H	SSS	22 - 76
SCP1822LC	SSS	29 - 43
SCP1824	SSS	22 -100
SCP1824C	SSS	22 -102
SCP1824E	SSS	22 -103
SCP1824L	SSS	22 -101
SCP1824LC	SSS	22 -104
SCP1824LE	SSS	22 -105
SCP1831	SSS	68 - 96
SCP1831C	SSS	68 -100
SCP1831E	SSS	68 -101
SCP1831L	SSS	68 - 98
SCP1831LC	SSS	68 -104
SCP1831LE	SSS	68 -105
SCP1832	♦SSS	68 - 97
SCP1832C	SSS	68 -102
SCP1832E	SSS	68 -103
SCP1832L	♦SSS	68 - 99
SCP1832LC	♦SSS	68 -106
SCP1832LE	SSS	68 -107
SCP1833	♦SSS	43 - 33
SCP1833C	SSS	74 - 4
SCP1833E	SSS	74 - 5
SCP1833L	♦SSS	43 - 34
SCP1833LC	SSS	74 - 8
SCP1833LE	SSS	74 - 9
SCP1834	♦SSS	74 - 2
SCP1834C	SSS	74 - 6
SCP1834E	SSS	74 - 7
SCP1834L	♦SSS	74 - 3
SCP1834LC	♦SSS	74 - 10
SCP1834LE	♦SSS	74 - 11
SFC4174E	♦THEF	96 - 12
SFC4174EM	♦THEF	96 - 13
SFC4174ET	♦THEF	96 - 14
SFC4175E	♦THEF	92 - 86
SFC4175EM	♦THEF	92 - 87
SFC4175ET	♦THEF	92 - 88
SFC70301K	THEF	59 - 67
SFC70301KM	THEF	59 - 68
SFC70301KT	THEF	59 - 69
SFC80101AK	THEF	21 - 73
SFC80101K	THEF	21 - 98
SFC80106AK	♦THEF	24 - 71
SFC80107K	THEF	24 - 72
SFF71A708J	♦THEF	75 -100
SFF71A708K	♦THEF	75 -101
SFF71A716J	♦THEF	80 - 78
SFF71A716K	♦THEF	80 - 79
SFF821L14E-20	♦THEF	40 - 68
SFF821L14E-25	♦THEF	40 - 99
SFF821L14E-30	♦THEF	41 - 44
SFF821L14E-45	♦THEF	41 - 88
SFF821L14J-20	♦THEF	40 - 69
SFF821L14J-25	♦THEF	41 - 1
SFF821L14J-30	♦THEF	41 - 45
SFF821L14J-45	♦THEF	41 - 89
SFF70611KM#1	♦THEF	63 - 33
SFF70611KM#2	♦THEF	66 - 34
SFF70611KT#1	♦THEF	63 - 34
SFF70611KT#2	♦THEF	66 - 35
SFF70612KM#1	♦THEF	69 - 5
SFF70612KM#2	♦THEF	71 - 79
SFF70612KT#1	♦THEF	69 - 6
SFF70612KT#2	♦THEF	71 - 80
SFF70701KM	♦THEF	65 - 40
SFF70701KT	♦THEF	65 - 41
SFF71708J	♦THEF	76 - 30
SFF71708K	♦THEF	76 - 31
SFF71716J	♦THEF	80 - 93
SFF71716K	♦THEF	80 - 94
SFF82114E-20	♦THEF	40 - 70
SFF82114E-25	♦THEF	41 - 2
SFF82114E-30	♦THEF	41 - 46
SFF82114E-45	♦THEF	41 - 90
SFF82114J-20	♦THEF	40 - 71
SFF82114J-25	♦THEF	41 - 3
SFF82114J-30	♦THEF	41 - 47
SFF82114J-45	♦THEF	41 - 91
SIL1902	SLTC	34 -107
SIL4014BD	SLTC	97 - 97
SIL4014BE	SLTC	97 - 98
SIL4014BF	SLTC	97 - 99
SIL4015BD	SLTC	94 - 81
SIL4015BE	SLTC	94 - 79
SIL4015BF	SLTC	94 - 82
SIL4021BD	SLTC	97 -100
SIL4021BE	SLTC	97 -101
SIL4021BF	SLTC	97 -102
SIL4035BD	SLTC	90 - 85
SIL4035BE	SLTC	90 - 69
SIL4035BF	SLTC	90 - 86
SL5-2050-12	GIC	101 -102
SL5-2050-16	GIC	101 -103
SL5-2050-30	GIC	101 -104
SL5-2064-12	GIC	102 - 64
SL5-2064-16	GIC	102 - 65
SL5-2064-30	GIC	102 - 66
SL5-2128	♦GIC	104 - 41
SL5-2128-12	♦GIC	104 - 42
SL5-2128-16	♦GIC	104 - 43
SL5-4016	♦GIC	100 - 87
SL5-4025	GIC	100 -110
SL5-4032	GIC	101 - 50
SL5-C2100-16	♦GIC	104 - 56
SL5-C2128-12	♦GIC	104 - 57
SL5-C2128-16	♦GIC	104 - 58
SL6-2050	♦GIC	101 -109
SL6-2050-16	♦GIC	101 -105
SL6-2050-69	♦GIC	101 -106
SL6-2064	♦GIC	102 - 70
SL6-2064-16	♦GIC	102 - 67
SL6-4025	♦GIC	100 -108
SL6-4025-69	♦GIC	100 -106
SL6-4032	♦GIC	101 - 48
SL6-4032-69	♦GIC	101 - 46
SL7-2050	♦GIC	101 -107
SL7-2050-30	♦GIC	101 -108
SL7-2064	♦GIC	102 - 68
SL7-2064-30	♦GIC	102 - 69
SL7-2128	♦GIC	104 - 44
SL7-2128-30	♦GIC	104 - 45
SL7-4016-30	♦GIC	100 - 86
SL7-4025	♦GIC	100 -109
SL7-4025-30	♦GIC	100 -107
SL7-4032	♦GIC	101 - 49
SL7-4032-30	♦GIC	101 - 47
SL7-C2100-30	GIC	104 - 13
SL9-1512-21#1	♦GIC	106 - 43
SL9-1512-21#2	♦GIC	106 - 47
SL9-1512-23#1	♦GIC	106 - 40
SL9-1512-23#2	♦GIC	106 - 44
SL9-1512-28#1	♦GIC	106 - 41
SL9-1512-28#2	♦GIC	106 - 45
SL9-1512-69#1	♦GIC	106 - 42
SL9-1512-69#2	♦GIC	106 - 46
SL9-2256-21#1	♦GIC	105 - 56
SL9-2256-21#2	♦GIC	105 - 60
SL9-2256-23#1	GIC	105 - 53
SL9-2256-23#2	♦GIC	105 - 57
SL9-2256-28#1	♦GIC	105 - 54
SL9-2256-28#2	♦GIC	105 - 58
SL9-2256-69#1	♦GIC	105 - 55
SL9-2256-69#2	♦GIC	105 - 59
SL9-4128-28#1	♦GIC	104 - 69
SL9-4128-28#2	♦GIC	104 - 71
SL9-4128-69#1	♦GIC	104 - 70
SL9-4128-69#2	♦GIC	104 - 72
SL9-4128-71#1	♦GIC	104 - 73
SL9-4128-71#2	♦GIC	104 - 74
SM82S190-1	♦STX	79 - 83
SM82S190-2	♦STX	79 - 87
SM82S190-3	♦STX	79 - 91
SM82S191-1	♦STX	79 - 84
SM82S191-2	♦STX	79 - 88
SM82S191-3	♦STX	79 - 92
SMA1001	TII	32 - 1
	TIIB	
SMA2001	♦TII	44 - 3
	TIIB	
SMA2002	♦TII	39 - 29
	TIIB	
SMC4030JR	TII	47 - 81
SMC4050JR	♦TII	47 - 82
SMC4060JR	♦TII	47 - 83
SMC7495N	SELI	90 - 9
SN54L95N	TII	90 - 82
	TIIB	
SN54L99N	TII	90 - 83
	TIIB	
SN54LS89J	MOTA	21 - 43
SN54LS89W	MOTA	21 - 44
SN54LS95AN	TII	92 - 97
SN54LS174N	TII	96 - 23
SN54LS175N	TII	93 - 62
SN54LS194J	TII	92 - 98
SN54LS194N	TII	92 - 99
SN54LS194W	TII	92 -100
SN54LS195J	TII	92 -101
SN54LS195N	TII	92 -102
SN54LS195W	TII	92 -103
SN54LS200AJ	♦TII	25 - 13
SN54LS207J	TII	27 - 93
SN54LS208J	TII	27 - 94
SN54LS214J	TII	34 - 53
SN54LS215J	TII	34 - 41
SN54LS295J	TII	92 -104
SN54LS295N	TII	92 -105
SN54LS295W	TII	92 -106
SN54LS300AJ	TII	25 - 14
SN54LS300AW	TII	25 - 15
SN54LS314J	TII	34 - 54
SN54LS315J	TII	34 - 42
SN54LS574J	MOTA	97 - 24
SN54LS574W	MOTA	97 - 25
SN54S200AJ	TII	25 - 27
SN54S200AW	TII	25 - 28
SN54S200J	TII	24 - 73
	TIIB	
SN54S200N	TII	24 - 74
	TIIB	
SN54S200W	TII	24 - 75
	TIIB	
SN54S206J	TII	24 - 79
	TIIB	
SN54S206N	TII	24 - 80
	TIIB	
SN54S206W	TII	24 - 81
	TIIB	
SN54S207J	TII	27 - 87
SN54S208J	TII	27 - 88
SN54S214J	TII	34 - 43
SN54S300AJ	TII	25 - 29
SN54S300AW	TII	25 - 30
SN54S314J	TII	34 - 44
SN54S330J	TII	109 - 57
SN54S331J	TII	109 - 58
SN54S374J#	MMI	97 - 58
SN54S452J	TII	80 - 24
SN54S453J	TII	80 - 25
SN54S454J	TII	77 - 60
SN54S455J	TII	77 - 61
SN54S474J	TII	70 - 58
SN54S474W	TII	70 - 59
SN54S475J	TII	70 - 60
SN54S475W	TII	70 - 61
SN54S476J	TII	72 - 18
SN54S477J	TII	72 - 19
SN54S478J	TII	74 -107
SN54S479J	TII	74 -108
SN54S2708J	TII	74 -109
SN54S3708J	TII	74 -110
SN74L91T	TII	99 - 35
	TIIB	
SN74L95T	TII	90 - 84
	TIIB	
SN74LS89J	MOTA	21 - 45
SN74LS89N	MOTA	21 - 46
SN74LS89W	MOTA	21 - 47
SN74LS95BW	MOTA	93 - 22
SN74LS164W	MOTA	98 -102
SN74LS165W	MOTA	98 - 59
SN74LS170W	♦MOTA	20 - 20
SN74LS174W	MOTA	96 - 17
	TII	
SN74LS175W	MOTA	93 - 23
	TII	
SN74LS189W	MOTA	21 - 48
SN74LS194AW	MOTA	93 - 24
SN74LS194J	TII	92 -107
SN74LS194N	TII	92 -108
SN74LS194W	TII	92 -109
SN74LS195AW	MOTA	93 - 25
SN74LS195J	TII	92 -110
SN74LS195N	TII	93 - 1
SN74LS195W	TII	93 - 2
SN74LS200AJ	TII	24 - 98
SN74LS200AN	TII	24 - 99
SN74LS207J	TII	27 - 95
SN74LS207N	TII	27 - 96
SN74LS208J	TII	27 - 97
SN74LS208N	TII	27 - 98
SN74LS214J	TII	34 - 49
SN74LS214N	TII	34 - 50
SN74LS215J	TII	34 - 45
SN74LS215N	TII	34 - 46
SN74LS273W	MOTA	97 - 18
SN74LS289W	MOTA	21 - 49
SN74LS295AW	MOTA	93 - 26
SN74LS295J	TII	93 - 3
SN74LS295N	TII	93 - 4
SN74LS295W	TII	93 - 5
SN74LS299W	MOTA	97 - 26
SN74LS300AJ	TII	24 -100
SN74LS300AN	TII	24 -101
SN74LS314J	TII	34 - 51
SN74LS314N	TII	34 - 52
SN74LS315J	TII	34 - 47
SN74LS315N	TII	34 - 48
SN74LS322W	MOTA	97 - 27
SN74LS323W	MOTA	97 - 28
SN74LS374W	MOTA	97 - 29
SN74LS377W	MOTA	97 - 19
SN74LS378W	MOTA	96 - 18
SN74LS379W	MOTA	93 - 27
SN74LS395W	MOTA	93 - 28
SN74LS574J	MOTA	97 - 30
SN74LS574N	MOTA	97 - 31
SN74LS574W	MOTA	97 - 32
SN74LS594FN	none	98 - 62
SN74LS670W	MOTA	20 - 21
SN74S200AJ	♦TII	24 - 96
SN74S200AN	♦TII	24 - 97
SN74S200J	♦TII	24 - 76
	TIIB	
SN74S200N	♦TII	24 - 77
	TIIB	
SN74S200W	♦TII	24 - 78
	TIIB	
SN74S206J	TII	24 - 82
	TIIB	
SN74S206N	TII	24 - 83
	TIIB	
SN74S206W	TII	24 - 84
	TIIB	
SN74S207J	TII	27 - 89
SN74S207N	TII	27 - 90
SN74S208J	TII	27 - 91
SN74S208N	TII	27 - 92
SN74S214AJ	TII	34 - 17
SN74S214AN	TII	34 - 18
SN74S214J	TII	34 - 33
SN74S214N	TII	34 - 34
SN74S300AJ	TII	24 -102
SN74S300AN	TII	24 -103
SN74S314AJ	TII	34 - 19
SN74S314AN	TII	34 - 20
SN74S314J	TII	34 - 35
SN74S314N	TII	34 - 36
SN74S330J	TII	109 - 59
SN74S330N	TII	109 - 60
SN74S331J	TII	109 - 61
SN74S331N	TII	109 - 62
SN74S374JΔ	MMI	97 - 59
SN74S374NΔ	MMI	97 - 60
SN74S452J	TII	80 - 26
SN74S452N	TII	80 - 27
SN74S453J	TII	80 - 28
SN74S453N	TII	80 - 29
SN74S454J	TII	77 - 62
SN74S454N	TII	77 - 63
SN74S455J	TII	77 - 64
SN74S455N	TII	79 -109
SN74S474N	TII	70 - 46
SN74S479J	TII	75 - 1
SN5481AN	TII	20 - 94
	TIIB	
SN5484AN	TII	20 - 95
	TIIB	
SN5488AN	TII	57 - 39
	TIIB	
SN5491AN	TII	99 - 61
	TIIB	
SN5494N	♦TII	94 - 43
	TIIB	
SN5495J	NSC	93 -100
	TII	TIIB
SN5495N	♦TII	92 - 35
	TIIB	
SN5495S	TII	92 - 36
	TIIB	
SN7481AW	TII	20 - 96
	TIIB	
SN7484AW	TII	20 - 97
	TIIB	
SN7488AW	TII	57 - 40
SN7488N	♦TII	57 - 69
	TIIB	
SN7494W	♦TII	94 - 44
	TIIB	
SN7495J	TII	92 - 37
	TIIB	
SN7495N	NSC	92 - 38
	♦TII	TIIB
SN7495S	TII	92 - 39
	TIIB	
SN10139J	TII	57 - 79
SN10139JE	TII	57 - 80
SN10140J	TII	23 - 10
SN10141J	TII	94 - 27
SN10141N	TII	94 - 28
SN10142J	TII	23 - 3
SN10144J	TII	24 - 68
SN10145J	♦TII	21 - 27
SN10145JE	♦TII	21 - 28
SN10147J	TII	24 - 4
SN10148J	TII	23 - 11
SN54165N	TII	98 - 44
	TIIB	
SN54166N	TII	98 - 52
	TIIB	
SN54174N	♦TII	96 - 15
SN54175N	♦TII	92 - 89
SN54178N	TII	92 - 90
	TIIB	
SN54179N	TII	92 - 91
	TIIB	
SN54186N	TII	58 - 82
	TIIB	
SN54198N	TII	97 - 8
	TIIB	
SN54199N	TII	97 - 9
	TIIB	
SN54278N	TII	90 - 44
SN74165W	TII	98 - 45
	TIIB	
SN74166W	TII	98 - 53
	TIIB	
SN74174W	♦TII	96 - 16
SN74175W	♦TII	92 - 92
SN74178W	TII	92 - 93
	TIIB	
SN74179W	TII	92 - 94
	TIIB	
SN74185AW	TII	88 - 73
	TIIB	

♦-Mfr's data sheet available in microfilm service

Cur-In current D.A.T.A.BOOK
Δ-Registered with JEDEC by this manufacturer

Obs-In this book

1. TYPE No. CROSS INDEX

IN TYPE NUMBER SEQUENCE

TYPE No.	MFRS	Pg&Line
SN74188J	TII	58 - 1
	TIIB	
SN74188N	TII	58 - 2
	TIIB	
SN74198W	TII	97 - 10
	TIIB	
SN74199W	TII	97 - 11
	TIIB	
SN74200D	NSC	25 - 92
SN74200J	♦TII	25 - 93
	TIIB	
SN74200N	NSC	25 - 94
♦TII	TIIB	
SN74278W	TII	90 - 45
SO1	♦INS	105 - 35
SRM9225	none	71 - 33
SS5-1032-31	GIC	100 - 88
SS5-8211-31	GIC	100 - 58
SS5-8212-12	GIC	100 - 59
SS5-8212-16	GIC	100 - 60
SS6-1032-55	♦GIC	100 - 89
SS6-8211	GIC	100 - 66
SS6-8211-55	GIC	100 - 61
SS6-8212	♦GIC	100 - 67
SS6-8212-16	♦GIC	100 - 62
SS6-8212-69	♦GIC	100 - 63
SS7-2016-31	GIC	100 - 64
SS7-8211	♦GIC	100 - 47
SS7-8212	♦GIC	100 - 68
SS7-8212-30	♦GIC	100 - 65
SS4015AE	SST	94 - 83
SW5491AJ	SWM	99 - 67
SW5494J	SWM	94 - 45
SW5495J	SWM	92 - 40
SW5496J	SWM	95 - 43
SW7491AJ	SWM	99 - 68
SW7491AN	SWM	99 - 69
SW7494J	SWM	94 - 46
SW7494N	SWM	94 - 47
SW7495J	SWM	92 - 41
SW7495N	SWM	92 - 42
SW7496J	SWM	95 - 44
SW7496N	SWM	95 - 45
SW54166J	SWM	97 - 12
SW54198N	SWM	97 - 13
SW54199N	SWM	97 - 14
SW74166J	SWM	98 - 54
SW74166N	SWM	98 - 55
SW74198N	SWM	97 - 15
SW74199N	SWM	97 - 16
SY21H01-1	♦SYK	31 - 24
SY21H02-1	♦SYK	38 - 81
SY21H11-1	♦SYK	31 - 25
SY21H12-1	♦SYK	31 - 26
SY1103A-X	♦SYK	32 -105
SYC21H01	SYK	31 - 27
SYC21H01-2	SYK	31 - 33
SYC21H02	SYK	38 -101
SYC21H02-2	SYK	38 -103
SYC21H11	SYK	31 - 28
SYC21H11-2	SYK	31 - 34
SYC21H12	SYK	31 - 29
SYC21H12-2	SYK	31 - 35
SYC21L02	SYK	38 - 75
SYC21L02-1	SYK	38 - 22
SYC21L02A	SYK	37 - 76
SYC21L02B	SYK	37 - 86
SYC1103A-1	SYK	32 -106
SYC1103A-X	SYK	33 -105
SYC1402A	SYK	105 - 70
SYC2102-1	SYK	39 - 16
SYC2102-1L	SYK	39 - 17
SYC2102-6	SYK	39 - 20
SYC2102A-2	SYK	39 - 12
SYC2102A-4	SYK	39 - 14
SYC2111-1	SYK	31 - 42
SYC2111A	SYK	31 - 39
SYC2112-1	SYK	31 - 43
SYC2112A	SYK	31 - 40
SYC2114	SYK	42 - 18
SYC2114-2	SYK	42 - 10
SYC2114-3	SYK	42 - 14
SYC2114L	SYK	42 - 19
SYC2114L-2	SYK	42 - 11
SYC2114L-3	SYK	42 - 15
SYC2114LV	SYK	42 - 20
SYC2142	SYK	41 - 92
SYC2142-2	SYK	40 - 72
SYC2142-3	SYK	41 - 48
SYC2142L	SYK	41 - 93
SYC2142LV	SYK	41 - 94
SYC2142LV-3	SYK	41 - 49
SYC2147	SYK	49 - 53
SYC2147-3	SYK	49 - 39
SYC2147L	SYK	49 - 54
SYC2316A	SYK	78 - 59
SYC2316B	SYK	78 - 58
SYC2316B-3	SYK	78 - 57
SYC2332	SYK	81 - 96
SYC2332-3	SYK	81 - 94
SYC2333	SYK	81 - 97
SYC2333-3	SYK	81 - 95
SYC2364	SYK	82 - 92
SYC2364-3	SYK	82 -100
SYC2401	SYK	108 - 8
SYC2401-1	SYK	108 - 10
SYC2530	SYK	69 - 2
SYC2533	SYK	107 - 95
SYC2534	SYK	107 - 1
SYC2534A	SYK	107 - 4
SYC2535	SYK	106 - 7
SYC2535A	SYK	106 - 10
SYC2716	SYK	80 - 63
SYC2716-1	SYK	80 - 60

TYPE No.	MFRS	Pg&Line
SYC2716-2	SYK	80 - 61
SYC2802A	SYK	105 -103
SYC2825A	SYK	108 - 18
SYC2826	SYK	108 - 19
SYC2827	SYK	108 - 25
SYC2833	SYK	107 -105
SYC2833A	SYK	107 -109
SYC2833B	SYK	108 - 2
SYC2833C	SYK	108 - 5
SYC3514	SYK	69 - 3
SYC3515	SYK	68 -110
SYC4050	SYK	47 - 84
SYC4050-1	SYK	46 -104
SYC4050-2	SYK	46 - 35
SYC4600	SYK	79 - 41
SYC5101-8	SYK	29 - 21
SYC5101L	SYK	29 - 17
SYC5101L-1	SYK	29 - 15
SYC5101L-3	SYK	29 - 18
SYC5102-3	SYK	36 - 15
SYC5102L-3	SYK	36 - 16
SYD2114-1	SYK	39 - 32
SYD2114-2	SYK	39 - 33
SYD2114-3	SYK	39 - 34
SYD2114L2	SYK	40 - 73
SYD2114L3	SYK	41 - 50
SYD2114L	SYK	41 - 95
SYD2114LV2	SYK	40 - 74
SYD2114LV3	SYK	41 - 51
SYD2114LV	SYK	41 - 96
SYD2142	SYK	41 - 97
SYD2142-2	SYK	40 - 75
SYD2142-3	SYK	41 - 52
SYD2142L2	SYK	40 - 76
SYD2142L3	SYK	41 - 53
SYD2142L	SYK	41 - 98
SYD2147	SYK	49 - 55
SYD2147-3	SYK	49 - 40
SYD2147-6	SYK	49 - 68
SYD2147L	SYK	49 - 56
SYD2148L	SYK	40 - 22
SYD2316A	SYK	78 - 82
SYM1403A	SYK	106 - 57
SYM1404A	SYK	107 - 19
SYM2803A	SYK	106 -107
SYM2804A	SYK	107 - 80
SYMC2114	♦SYK	41 - 99
SYMC2114-3	♦SYK	41 - 54
SYMC2147-6#ai	SYK	49 - 69
SYMC2148-6#ai	SYK	40 - 30
SYMC2148#ai	SYK	40 - 23
SYMC2833	SYK	107 -106
SYMD2147-6#ai	SYK	49 - 70
SYMD2147#ai	SYK	49 - 57
SYMD2148-6#ai	SYK	40 - 31
SYMD2148#ai	SYK	40 - 24
SYMD2149H3#ai	SYK	40 - 16
SYMD2149H#ai	SYK	40 - 25
SYMD2332	none	81 - 78
SYMF2147-6#ai	SYK	49 - 71
SYMF2147#ai	SYK	49 - 58
SYMF2148-6#ai	SYK	40 - 32
SYMF2148#ai	SYK	40 - 26
SYP21H01	SYK	31 - 30
SYP21H01-2	SYK	31 - 36
SYP21H02	SYK	38 -102
SYP21H02-2	SYK	38 -104
SYP21H11	SYK	31 - 31
SYP21H11-2	SYK	31 - 37
SYP21H12	SYK	31 - 32
SYP21H12-2	SYK	31 - 38
SYP21L02	SYK	38 - 76
SYP21L02-1	SYK	38 - 23
SYP21L02A	SYK	37 - 77
SYP21L02B	SYK	37 - 87
SYP1103A-1	SYK	32 -107
SYP1103A-X	SYK	33 -106
SYP1402A	SYK	105 - 71
SYP1403A	SYK	106 - 58
SYP1404A	SYK	107 - 20
SYP2102-1	SYK	39 - 18
SYP2102-1L	SYK	39 - 19
SYP2102-6	SYK	39 - 21
SYP2102A-2	SYK	39 - 13
SYP2102A-4	SYK	39 - 15
SYP2114	SYK	42 - 21
SYP2114-1	SYK	40 - 38
SYP2114-2	SYK	42 - 12
SYP2114-3	SYK	42 - 16
SYP2114L	SYK	42 - 22
SYP2114LV	SYK	42 - 23
SYP2114LV-2	SYK	42 - 13
SYP2114LV-3	SYK	42 - 17
SYP2128L-1	none	44 - 69
SYP2142	SYK	41 -100
SYP2142-2	SYK	40 - 77
SYP2142-3	SYK	41 - 55
SYP2142L	SYK	41 -101
SYP2142LV	SYK	41 -102
SYP2316A	SYK	78 - 60
SYP2401	SYK	108 - 9
SYP2401-1	SYK	108 - 11
SYP2530	SYK	68 -108
SYP2533	SYK	107 - 96
SYP2534	SYK	107 - 2
SYP2534A	SYK	107 - 5
SYP2535	SYK	106 - 8
SYP2535A	SYK	106 - 11
SYP2802A	SYK	105 -104
SYP2803A	SYK	106 -108
SYP2804A	SYK	107 - 81
SYP2825A	SYK	108 - 20
SYP2826	SYK	108 - 21
SYP2827	SYK	108 - 26

TYPE No.	MFRS	Pg&Line
SYP2833	SYK	107 -107
SYP2833A	SYK	107 -110
SYP2833B	SYK	108 - 3
SYP2833C	SYK	108 - 6
SYP3514	SYK	69 - 4
SYP3515	SYK	69 - 1
SYP4050	SYK	47 - 85
SYP4050-1	SYK	46 -105
SYP4050-2	SYK	46 - 36
SYP4600	SYK	79 - 42
SYP5101-8	SYK	29 - 22
SYP5101L	SYK	29 - 19
SYP5101L-1	SYK	29 - 16
SYP5101L-3	SYK	29 - 20
SYP5102-3	SYK	36 - 17
SYP5102L-3	SYK	36 - 18
SYT2533	SYK	107 - 97
SYT2534	SYK	107 - 3
SYT2534A	SYK	107 - 6
SYT2535	SYK	106 - 9
SYT2535A	SYK	106 - 12
SYT2833	SYK	107 -108
SYT2833A	SYK	108 - 1
SYT2833B	SYK	108 - 4
SYT2833C	SYK	108 - 7
T54S89J	TEC	21 - 74
T54S174F	TEC	96 - 37
T54S174J	TEC	96 - 38
T54S175F	TEC	94 - 21
T54S175J	TEC	94 - 22
T54S194F	TEC	94 - 12
T54S194J	TEC	94 - 13
T54S195F	TEC	94 - 14
T54S195J	TEC	94 - 15
T74S89J	TEC	21 - 75
T74S174F	TEC	96 - 39
T74S174J	TEC	96 - 40
T74S175F	TEC	94 - 23
T74S175J	TEC	94 - 24
T74S194F	TEC	94 - 16
T74S194J	TEC	94 - 17
T74S195F	TEC	94 - 18
T74S195J	TEC	94 - 19
T74S200J	TEC	25 - 80
T9300F	♦TEC	93 - 63
T9300FM	♦TEC	93 - 64
T9300J	♦TEC	93 - 65
T9300JM	♦TEC	93 - 66
T9314F	TEC	90 - 46
T9314FM	TEC	90 - 47
T9314J	TEC	90 - 48
T9314JM	TEC	90 - 49
TA10736D	♦RCA	78 - 90
TA10906CD	♦RCA	78 - 91
TA10906CE	♦RCA	78 - 92
TA10906D	♦RCA	78 - 86
TA10906E	♦RCA	78 - 87
TBP24S81MJ#ai		77 - 25
	♦TII	
TC5047APL-1	♦TOSJ	39 - 84
TC5047APL-2	♦TOSJ	39 - 95
TC5504P	♦TOSJ	49 - 10
TC5504P-1	♦TOSJ	49 - 12
TC5504P-2	♦TOSJ	49 - 14
TC5504PL	♦TOSJ	49 - 11
TC5504PL-1	♦TOSJ	49 - 13
TC5504PL-2	♦TOSJ	49 - 15
TC5508P	♦TOSJ	35 - 80
TC5508P-1	♦TOSJ	36 - 6
TC5508P-4	♦TOSJ	35 - 82
TC5514PL	♦TOSJ	39 - 83
TC5514PL-1	♦TOSJ	39 - 94
TC5514PL-2	♦TOSJ	39 - 96
TC5516BP	♦TOSJ	44 - 54
TC5516BPL	♦TOSJ	44 - 55
TC5516P	TOSJ	44 - 62
TIB0303	TII	109 - 22
TL1141G	♦ALGG	102 -103
TL1160G	ALGG	103 - 65
TL1161G	♦ALGG	101 - 83
TL1170L	♦ALGG	22 - 88
TL7491AN	♦ALGG	99 - 70
TL7494N	♦ALGG	91 - 67
TL7495AN	♦ALGG	93 -101
TL7496N	♦ALGG	95 - 46
TL74100N	♦ALGG	96 - 55
TL74118N	♦ALGG	95 -100
TL74119N	♦ALGG	95 -101
TL74164N	♦ALGG	97 - 46
TL74165N	♦ALGG	97 - 17
TL74166N	♦ALGG	97 - 42
TL74198N	♦ALGG	97 - 43
TL74199N	♦ALGG	97 - 44
TL84164N	♦ALGG	97 - 47
TM101	TUNH	21 - 8
TM106	TUNH	25 -104
TM107	TUNH	26 - 2
TM188	TUNH	57 - 23
TM601	TUNH	61 - 22
TM621	TUNH	61 - 23
TM622	TUNH	67 - 19
TM624	TUNH	67 - 20
TMC3362F	♦TEC	20 - 43
TMC3362J	♦TEC	20 - 44
TMC3363F	♦TEC	20 - 51
TMC3363J	♦TEC	20 - 52
TMC3364F	♦TEC	20 - 45
TMC3364J	♦TEC	20 - 46
TMC3762F	♦TEC	20 - 47
TMC3762J	♦TEC	20 - 48
TMC3763F	♦TEC	20 - 53
TMC3763J	♦TEC	20 - 54
TMC3764F	♦TEC	20 - 49
TMC3764J	♦TEC	20 - 50

TYPE No.	MFRS	Pg&Line
TMM142P	♦TOSJ	31 - 75
TMM323D	♦TOSJ	78 - 38
TMM323D-1	♦TOSJ	78 - 36
TMM323DI1	♦TOSJ	78 - 37
TMM323DI	♦TOSJ	78 - 39
TMM323DI-1	♦TOSJ	76 - 44
TMM416D-2	♦TOSJ	53 - 84
TMM416D-3	♦TOSJ	54 - 7
TMM416D-4	♦TOSJ	54 - 38
TMM4164C-3	♦TOSJ	56 - 7
TMM4164C-4	♦TOSJ	56 - 14
TMS21L47-7JDL	TII	45 - 7
TMS21L47-7JL	TII	45 - 8
TMS21L47-7NL	TII	49 - 59
TMS25L32-45JL	TII	82 - 63
TMS25L32JDL	♦TII	82 - 64
TMS25L32JL	♦TII	none
Repl.by TMS25L32-45JL		
		Cur.
TMS27A16C	♦MOTA	80 - 70
TMS27A16L	♦MOTA	80 - 71
TMS27L08JDL	TII	76 - 32
TMS27L08JL	TII	none
Repl.by TMS27L08-45JL		
		Cur.
TMS40L44-12NL		49 - 78
	♦TII	
TMS40L44-15NL	TII	none
Repl.by TMS40L44-12NL		
		Cur.
TMS40L44-20JDL		49 -105
	TII	
TMS40L44-20JL	TII	49 -106
TMS40L44-25JDL		50 - 22
	TII	
TMS40L44-25JL	TII	50 - 23
TMS40L44-45JDL		50 - 61
	TII	
TMS40L44-45JL	TII	50 - 62
TMS40L45-20JDL		40 - 78
	TII	
TMS40L45-20JL	TII	40 - 79
TMS40L45-20NL	TII	40 - 80
TMS40L45-25JDL		41 - 4
	TII	
TMS40L45-25JL	TII	41 - 5
TMS40L45-25NL	TII	41 - 6
TMS40L45-30JL	TII	41 - 56
TMS40L45-30NL	TII	41 - 57
TMS40L45-45JDL		41 -103
	TII	
TMS40L45-45JL	TII	41 -104
TMS40L45-45NL	TII	41 -105
TMS40L46-20JDL		49 -107
	TII	
TMS40L46-20JL	TII	49 -108
TMS40L46-20NL	TII	50 - 1
TMS40L46-25JDL		50 - 24
	TII	
TMS40L46-25JL	TII	50 - 25
TMS40L46-25NL	TII	50 - 26
TMS40L46-45JDL		50 - 63
	TII	
TMS40L46-45JL	TII	50 - 64
TMS40L46-45NL	TII	50 - 65
TMS40L47-20JDL		40 - 81
	TII	
TMS40L47-20JL	TII	40 - 82
TMS40L47-20NL	TII	40 - 83
TMS40L47-25JDL		41 - 7
	TII	
TMS40L47-25JL	TII	41 - 8
TMS40L47-25NL	TII	41 - 9
TMS40L47-30JL	TII	41 - 58
TMS40L47-30NL	TII	41 - 59
TMS40L47-45JDL		41 -106
	TII	
TMS40L47-45JL	TII	42 - 1
TMS40L47-45NL	TII	42 - 2
TMS1101JC	♦TII	27 - 50
	TIIB	
TMS1101NC	♦TII	27 - 51
	TIIB	
TMS1103-1JL	♦TII	33 - 28
TMS1103-1NL	♦TII	33 - 29
TMS1103JL	♦TII	33 - 61
TMS1103NC	♦TII	33 -104
	TIIB	
TMS1103NL	♦TII	33 - 62
TMS2147-5JDL	TII	45 - 9
TMS2147-5NL	♦TII	49 - 41
TMS2147-7JDL	TII	45 - 10
TMS2147-7JL	♦TII	45 - 11
TMS2147-7NL	♦TII	49 - 60
TMS2147-9JDL	TII	45 - 12
TMS2147-9JL	TII	45 - 13
TMS2147-9NL	TII	45 - 14
TMS2147H3JL	♦TII	49 - 29
TMS2147H3NL	♦TII	49 - 30
TMS2147H4JL	♦TII	49 - 34
TMS2147H4NL	♦TII	49 - 35
TMS2147H5JL	♦TII	49 - 42
TMS2147H5NL	♦TII	49 - 43
TMS2147H7JL	♦TII	49 - 61
TMS2147H7NL	♦TII	49 - 62
TMS2149-3FPL	♦TII	40 - 7
TMS2149-3JL#ai		40 - 8
	♦TII	
TMS2149-3NL#ai		40 - 9
	♦TII	
TMS2149-4FPL	♦TII	40 - 10
TMS2149-4JL#ai		40 - 11
	♦TII	

TYPE No.	MFRS	Pg&Line
TMS2149-4NL#ai		40 - 12
	♦TII	
TMS2149-5FPL	♦TII	40 - 17
TMS2149-5JL#ai		40 - 18
	♦TII	
TMS2149-5NL#ai		40 - 19
	♦TII	
TMS2149-7FPL	♦TII	40 - 27
TMS2149-7JL#ai		40 - 28
	♦TII	
TMS2149-7NL#ai		40 - 29
	♦TII	
TMS2150-9JDL	♦TII	109 - 18
TMS2167-4JL	♦TII	55 - 14
TMS2167-4NL	♦TII	55 - 15
TMS2167-5JL	♦TII	55 - 16
TMS2167-5NL	♦TII	55 - 17
TMS2167-7JL	♦TII	55 - 19
TMS2168-4JL	♦TII	52 - 35
TMS2168-5JL	♦TII	52 - 38
TMS2168-7JL	♦TII	52 - 41
TMS2169-4JL	♦TII	52 - 36
TMS2169-4NL	♦TII	52 - 37
TMS2169-5JL	♦TII	52 - 39
TMS2169-5NL	♦TII	52 - 40
TMS2169-7JL	♦TII	52 - 42
TMS2169-7NL	♦TII	52 - 43
TMS2300JC	♦TII	65 - 22
	TIIB	
TMS2300NC	♦TII	65 - 23
	TIIB	
TMS2400JC	♦TII	86 - 7
	TIIB	
TMS2400NC	♦TII	86 - 8
	TIIB	
TMS2403JC	TII	84 -108
	TIIB	
TMS2404JC	TII	86 - 38
	TIIB	
TMS2500JC#1	♦TII	68 - 22
	TIIB	
TMS2500JC#2	♦TII	65 - 38
	TIIB	
TMS2500NC#1	♦TII	68 - 23
	TIIB	
TMS2500NC#2	♦TII	65 - 39
	TIIB	
TMS2501JC	♦TII	84 -109
TMS2501NC	♦TII	84 -110
TMS2508-25JDL	TII	75 - 98
TMS2508-25JL	♦TII	75 - 99
TMS2508-30JDL	TII	75 -102
TMS2508-30JL	♦TII	75 -103
TMS2516-25JL	♦TII	80 - 67
TMS2516JDL	♦TII	80 - 95
TMS2516JL	♦TII	none
Repl.by TMS2516-45JL		
		Cur.
TMS2532JDL	♦TII	82 - 65
TMS2532JL	♦TII	none
Repl.by TMS2532-45JL		
		Cur.
TMS2564JL	TII	none
Repl.by TMS2564-45JL		
		Cur.
TMS2600JC#1	♦TII	63 - 88
	TIIB	
TMS2600JC#2	♦TII	66 - 75
	TIIB	
TMS2600NC#1	♦TII	66 - 78
	TIIB	
TMS2600NC#2	♦TII	63 - 91
	TIIB	
TMS2602JC#1	♦TII	87 - 63
	TIIB	
TMS2602JC#2	♦TII	88 - 39
	TIIB	
TMS2602NC#1	TII	87 - 64
	TIIB	
TMS2602NC#2	TII	88 - 40
	TIIB	
TMS2603JC	♦TII	88 - 2
	TIIB	
TMS2603NC	♦TII	88 - 3
	TIIB	
TMS2604JC#1	♦TII	87 - 41
	TIIB	
TMS2604JC#2	♦TII	88 - 44
	TIIB	
TMS2604NC#1	♦TII	87 - 42
	TIIB	
TMS2604NC#2	♦TII	88 - 45
	TIIB	
TMS2700JC	♦TII	65 - 42
	TIIB	
TMS2700JM	♦TII	65 - 48
	TIIB	
TMS2700NC	♦TII	65 - 43
	TIIB	
TMS2708-35JDL	TII	76 - 3
TMS2708-45JDL	TII	76 - 33
TMS2708JL	TII	76 - 34
TMS2716JDL	TII	80 - 96
TMS2716JL	TII	80 - 97
TMS2732-JL	♦TII	81 - 87
TMS2758JL0	TII	76 - 35
TMS2758JL1	TII	76 - 36
TMS2758JL	♦TII	76 - 37
TMS2764JL	♦TII	82 - 89
TMS2800JC	♦TII	60 - 89
	TIIB	
TMS2800NC	♦TII	60 - 90
	TIIB	

♦-Mfr's data sheet available in microfilm service

Cur-In current D.A.T.A.BOOK
Δ-Registered with JEDEC by this manufacturer

Obs-In this book

1. TYPE No. CROSS INDEX

IN TYPE NUMBER SEQUENCE

TYPE No.	MFRS	Pg&Line
TMS2900JC#1	♦TII	62 - 74
	TIIB	
TMS2900JC#2	♦TII	59 - 42
	TIIB	
TMS2900NC#1	♦TII	62 - 75
	TIIB	
TMS2900NC#2	♦TII	59 - 43
	TIIB	
TMS3000LR	♦TII	100 -105
	TIIB	
TMS3001LR	♦TII	101 - 12
	TIIB	
TMS3002LR	♦TII	101 -110
	TIIB	
TMS3003LR	♦TII	104 - 3
	TIIB	
TMS3012JC	♦TII	104 - 46
	TIIB	
TMS3012NC	♦TII	104 - 47
	TIIB	
TMS3016LR	♦TII	100 - 51
	TIIB	
TMS3026JC	♦TII	96 - 45
	TIIB	
TMS3028LC	TII	104 - 48
	TIIB	
TMS3028LR	♦TII	104 - 38
	TIIB	
TMS3064-1JDL	♦TII	109 - 15
TMS3064JDL	♦TII	109 - 16
TMS3064JL	♦TII	108 - 28
TMS3101LC	♦TII	104 - 17
	TIIB	
TMS3101NC	♦TII	104 - 18
	TIIB	
TMS3102LC	♦TII	103 - 20
	TIIB	
TMS3102NC	♦TII	103 - 21
	TIIB	
TMS3103LC	♦TII	102 - 81
	TIIB	
TMS3103NC	♦TII	102 - 82
	TIIB	
TMS3112JC	♦TII	101 - 60
	TIIB	
TMS3112NC	♦TII	101 - 61
	TIIB	
TMS3113JC	♦TII	104 - 86
	TIIB	
TMS3113NC	♦TII	104 - 87
	TIIB	
TMS3120JC	♦TII	103 - 41
TMS3120NC	♦TII	103 - 42
TMS3121JC	♦TII	102 - 94
TMS3121NC	♦TII	102 - 95
TMS3122JC	♦TII	101 - 55
	TIIB	
TMS3122NC	♦TII	101 - 56
	TIIB	
TMS3123JC	♦TII	101 - 57
	TIIB	
TMS3123NC	♦TII	101 - 58
	TIIB	
TMS3126LC	♦TII	103 - 58
TMS3126NC	♦TII	103 - 59
TMS3127LC	♦TII	104 - 19
TMS3127NC	♦TII	104 - 20
TMS3128LC	♦TII	104 - 59
TMS3128NC	♦TII	104 - 60
TMS3129LC	♦TII	104 - 80
TMS3129NC	♦TII	104 - 81
TMS3130LC	♦TII	104 - 88
TMS3130NC	♦TII	104 - 89
TMS3131LC	♦TII	104 - 92
TMS3131NC	♦TII	104 - 93
TMS3132LC	♦TII	104 -101
TMS3132NC	♦TII	104 -102
TMS3133NC	♦TII	107 -104
TMS3135JC	♦TII	103 - 54
TMS3135NC	♦TII	103 - 55
TMS3137JC	♦TII	104 - 30
TMS3137NC	♦TII	104 - 31
TMS3138JC	♦TII	104 - 32
TMS3138NC	♦TII	104 - 33
TMS3139JC	♦TII	104 - 94
TMS3139NC	♦TII	104 - 95
TMS3140JC	♦TII	104 -103
TMS3140NC	♦TII	104 -104
TMS3304LR	♦TII	103 - 2
	TIIB	
TMS3305LR	♦TII	102 - 88
	TIIB	
TMS3309JC	♦TII	106 - 98
	TIIB	
TMS3314JC	♦TII	102 - 12
	TIIB	
TMS3314JR	♦TII	102 - 13
	TIIB	
TMS3314NC	TII	102 - 14
	TIIB	
TMS3401LC	♦TII	106 - 38
	TIIB	
TMS3401NC	♦TII	106 - 39
	TIIB	
TMS3402LC	♦TII	106 - 14
	TIIB	
TMS3402NC	♦TII	106 - 15
	TIIB	
TMS3404JC	♦TII	106 - 99
	TIIB	
TMS3404NC	♦TII	106 -100
	TIIB	
TMS3406LR	♦TII	103 - 85
	TIIB	

TYPE No.	MFRS	Pg&Line
TMS3409JC	♦TII	103 - 44
	♦TIIB	
TMS3409NC	♦TII	103 - 45
	TIIB	
TMS3412JC	♦TII	105 - 97
	TIIB	
TMS3412NC	♦TII	105 - 98
	TIIB	
TMS3413LC	TII	106 -102
	TIIB	
TMS3413NC	TII	106 -103
	TIIB	
TMS3414LC	TII	107 - 74
	TIIB	
TMS3414NC	TII	107 - 75
	TIIB	
TMS3417JC	♦TII	102 - 97
TMS3417NC	♦TII	102 - 98
TMS3532NL	♦TII	81 - 88
TMS3564NL	♦TII	82 - 90
TMS3732A-NL	♦TII	81 - 89
TMS3764NL	♦TII	82 - 91
TMS4003JR	♦TII	27 - 48
	TIIB	
TMS4003NC	♦TII	27 - 49
	TIIB	
TMS4008NL0	TII	43 - 66
TMS4008NL1	TII	43 - 67
TMS4016-15JDL		44 - 70
	♦TII	
TMS4016-15JL	♦TII	44 - 71
TMS4016-20JDL		44 - 76
	♦TII	
TMS4016-20JL	♦TII	44 - 77
TMS4016-25JDL		44 - 80
	♦TII	
TMS4016-25JL	♦TII	44 - 81
TMS4016-45JDL		44 - 84
	♦TII	
TMS4016-45JL	♦TII	44 - 85
TMS4016-45NL	♦TII	44 - 86
TMS4016NL	♦TII	none
Repl.by TMS4016-25NL		
		Cur.
TMS4020NC	♦TII	39 - 23
	TIIB	
TMS4023NC	♦TII	33 -103
	TIIB	
TMS4024JC	♦TII	23 - 80
TMS4024NC	♦TII	23 - 81
TMS4025NC	♦TII	39 - 22
	TIIB	
TMS4027-15JDL		45 - 81
	♦TII	
TMS4027-15JL	♦TII	45 - 82
TMS4027-15NL	♦TII	45 - 83
TMS4027-20JDL		46 - 37
	♦TII	
TMS4027-20JL	♦TII	46 - 38
TMS4027-20NL	♦TII	46 - 39
TMS4027-25JDL		46 -106
	♦TII	
TMS4027-25JL	♦TII	46 -107
TMS4027-25NL	♦TII	46 -108
TMS4030-1JL	♦TII	46 -109
TMS4030-1NL	♦TII	46 -110
TMS4030-2JL	♦TII	46 - 40
TMS4030-2NL	♦TII	46 - 41
TMS4030JL	♦TII	47 - 86
TMS4030NL	♦TII	47 - 87
TMS4033/2102-1JL		37 - 99
	♦TII	
TMS4033/2102-1NL		37 -100
	♦TII	
TMS4034/2102-2JL		38 - 51
	♦TII	
TMS4034/2102-2NL		38 - 52
	♦TII	
TMS4035/2102JL		38 - 77
	♦TII	
TMS4035/2102NL		38 - 78
	♦TII	
TMS4036-1JL	♦TII	23 - 71
TMS4036-1NL	♦TII	23 - 72
TMS4036-2JL	♦TII	23 - 69
TMS4036-2NL	♦TII	23 - 70
TMS4036JL	♦TII	23 - 73
TMS4036NL	♦TII	23 - 74
TMS4039-1/2101-2JL		
	♦TII	30 - 84
TMS4039-1/2101-2NL		
	♦TII	30 - 85
TMS4039-2/2101-1JL		
	♦TII	30 - 36
TMS4039-2/2101-1NL		
	♦TII	30 - 37
TMS4039/2101JL		31 - 18
	♦TII	
TMS4039/2101NL		31 - 19
	♦TII	
TMS4042-1/2111-2JL		
	♦TII	30 - 86
TMS4042-1/2111-2NL		
	♦TII	30 - 87
TMS4042-2/2111-1JL		
	♦TII	30 - 38
TMS4042-2/2111-1NL		
	♦TII	30 - 39
TMS4042/2111JL		31 - 20
	♦TII	
TMS4042/2111NL		31 - 21
	♦TII	
TMS4043-1/2112-2JL		
	♦TII	30 - 88

TYPE No.	MFRS	Pg&Line
TMS4043-1/2112-2NL		
	♦TII	30 - 89
TMS4043-2JL	♦TII	30 - 40
TMS4043-2NL	♦TII	30 - 41
TMS4043/2112JL		31 - 22
	♦TII	
TMS4043/2112NL		31 - 23
	♦TII	
TMS4044-12NL	♦TII	49 - 79
TMS4044-15JDL	TII	49 - 85
TMS4044-15JL	TII	49 - 86
TMS4044-15NL	TII	none
Repl.by TMS4044-12NL		
		Cur.
TMS4044-20JDL	TII	50 - 2
TMS4044-20JL	TII	50 - 3
TMS4044-20NL	♦TII	50 - 4
TMS4044-25JDL	TII	50 - 27
TMS4044-25JL	TII	50 - 28
TMS4044-25NL	♦TII	50 - 29
TMS4044-30JL	TII	50 - 48
TMS4044-30NL	TII	50 - 49
TMS4044-45JDL	TII	50 - 66
TMS4044-45JL	TII	50 - 67
TMS4044-45NL	♦TII	50 - 68
TMS4045-15JDL		40 - 39
	♦TII	
TMS4045-15JL	♦TII	40 - 40
TMS4045-15NL	♦TII	40 - 41
TMS4045-20JDL		40 - 84
	♦TII	
TMS4045-20JL	♦TII	40 - 85
TMS4045-20NL	♦TII	40 - 86
TMS4045-25JDL		41 - 10
	♦TII	
TMS4045-25JL	♦TII	41 - 11
TMS4045-25NL	♦TII	41 - 12
TMS4045-30JL	♦TII	41 - 60
TMS4045-30NL	♦TII	41 - 61
TMS4045-45JDL		42 - 3
	♦TII	
TMS4045-45JL	♦TII	42 - 4
TMS4045-45NL	♦TII	42 - 5
TMS4046-15JDL	TII	49 - 87
TMS4046-15JL	TII	49 - 88
TMS4046-15NL	TII	49 - 89
TMS4046-20JDL	TII	50 - 5
TMS4046-20JL	TII	50 - 6
TMS4046-20NL	TII	50 - 7
TMS4046-25JDL	TII	50 - 30
TMS4046-25JL	TII	50 - 31
TMS4046-25NL	TII	50 - 32
TMS4046-30JL	TII	50 - 50
TMS4046-30NL	TII	50 - 51
TMS4046-45JDL	TII	50 - 69
TMS4046-45JL	TII	50 - 70
TMS4046-45NL	TII	50 - 71
TMS4047-15JDL		40 - 42
	♦TII	
TMS4047-15JL	♦TII	40 - 43
TMS4047-15NL	♦TII	40 - 44
TMS4047-20JDL		40 - 87
	♦TII	
TMS4047-20JL	♦TII	40 - 88
TMS4047-20NL	♦TII	40 - 89
TMS4047-25JDL		41 - 13
	♦TII	
TMS4047-25JL	♦TII	41 - 14
TMS4047-25NL	♦TII	41 - 15
TMS4047-30JL	♦TII	41 - 62
TMS4047-30NL	♦TII	41 - 63
TMS4047-45JDL		42 - 6
	♦TII	
TMS4047-45JL	♦TII	42 - 7
TMS4047-45NL	♦TII	42 - 8
TMS4050-1JDL	TII	47 - 1
TMS4050-1JL	♦TII	47 - 2
TMS4050-1NL	♦TII	47 - 3
TMS4050-2JDL	TII	46 - 42
TMS4050-2JL	♦TII	46 - 43
TMS4050-2NL	♦TII	46 - 44
TMS4050JDL	TII	47 - 88
TMS4050JL	♦TII	47 - 89
TMS4050NL	♦TII	47 - 90
TMS4051-1JL	♦TII	47 - 4
TMS4051-1NL	♦TII	47 - 5
TMS4051JL	♦TII	47 - 91
TMS4051NL	♦TII	47 - 92
TMS4060-1JDL	♦TII	47 - 6
TMS4060-1JL	♦TII	47 - 7
TMS4060-1NL	♦TII	47 - 8
TMS4060-2JDL	♦TII	46 - 45
TMS4060-2JL	♦TII	46 - 46
TMS4060-2NL	♦TII	46 - 47
TMS4060-3JL	♦TII	45 - 84
TMS4060-3NL	♦TII	45 - 85
TMS4060JDL	♦TII	47 - 93
TMS4060JL	♦TII	47 - 94
TMS4060NL	♦TII	47 - 95
TMS4062JC	♦TII	32 -108
TMS4062JL	♦TII	33 - 85
TMS4062NL	♦TII	33 - 86
TMS4063JC	TII	32 -109
	TIIB	
TMS4063JL	♦TII	33 - 87
TMS4063NC	TII	32 -110
	TIIB	
TMS4063NL	♦TII	33 - 88
TMS4070-1JL	♦TII	54 - 50
TMS4070-2JL	♦TII	54 - 39
TMS4070JL	♦TII	54 - 53
TMS4100JC	♦TII	85 - 89
TMS4100NC	♦TII	85 - 90

TYPE No.	MFRS	Pg&Line
TMS4103JC	♦TII	84 - 43
	TIIB	
TMS4103NC	♦TII	84 - 44
	TIIB	
TMS4108-15NL	TII	52 - 81
TMS4108-20NL	TII	52 - 83
TMS4108-25NL	TII	52 - 84
TMS4116-15JDL	TII	53 - 85
TMS4116-15JL	TII	53 - 86
TMS4116-20JDL	TII	54 - 8
TMS4116-20JL	TII	54 - 9
TMS4116-25JDL	TII	54 - 40
TMS4116-25JL	TII	54 - 41
TMS4116-30JDH		54 - 51
	♦TII	
TMS4116-30NH	♦TII	54 - 52
TMS4132-15JDL	TII	55 - 83
TMS4132-20JDL	TII	55 - 97
TMS4132-25JDL	TII	55 - 99
TMS4161-15NL	none	56 - 33
TMS4161-20NL	none	56 - 44
TMS4164-10JDL	TII	45 - 15
TMS4164-12JDL		56 - 2
	♦TII	
TMS4164-15FPL	none	56 - 34
TMS4164-15JDL		56 - 8
	♦TII	
TMS4164-20FPL	none	56 - 45
TMS4164-20JDL		56 - 15
	♦TII	
TMS4164-25FPL		56 - 20
	♦TII	
TMS4164-25JDL		56 - 21
	♦TII	
TMS4164-25NL	♦TII	56 - 22
TMS4164JDL	TII	none
Repl.by TMS4164-25JDL		
		Cur.
TMS4177JC	TII	85 - 4
	TIIB	
TMS4177JC%	TII	85 - 5
	TIIB	
TMS4177NC%	TII	85 - 6
	TIIB	
TMS4178JC	TII	85 - 7
	TIIB	
TMS4178JC%	TII	85 - 8
	TIIB	
TMS4178NC%	TII	85 - 9
	TIIB	
TMS4179JC	TII	86 - 30
	TIIB	
TMS4179NC	TII	86 - 31
	TIIB	
TMS4244JL	♦TII	49 - 80
TMS4244NL	♦TII	49 - 81
TMS4245JL	♦TII	40 - 34
TMS4245NL	♦TII	40 - 35
TMS4300JC#1	♦TII	81 - 13
	TIIB	
TMS4300JC#2	♦TII	71 - 95
	TIIB	
TMS4300JC#3	♦TII	77 - 20
	TIIB	
TMS4300JC#4	♦TII	69 - 37
	TIIB	
TMS4305JC	TII	71 - 10
	TIIB	
TMS4306JC	TII	71 - 11
	TIIB	
TMS4400JC	♦TII	69 - 38
TMS4400JC#1	♦TII	71 - 96
	TIIB	
TMS4400JC#2	♦TII	69 - 39
	TIIB	
TMS4400NC	♦TII	69 - 40
TMS4400NC#1	♦TII	71 - 97
	TIIB	
TMS4400NC#2	♦TII	69 - 41
	TIIB	
TMS4416-25NL	♦TII	55 - 61
TMS4464-10	none	56 - 56
TMS4500JC	♦TII	59 - 46
	TIIB	
TMS4600JC	♦TII	63 - 54
	TIIB	
TMS4700JC	♦TII	66 - 44
	TIIB	
TMS4700JL	♦TII	73 - 18
TMS4700NL	♦TII	73 - 19
TMS4710JL	♦TII	84 - 2
TMS4710NL	♦TII	84 - 3
TMS4732JDL	TII	82 - 4
TMS4800JL#1	♦TII	79 - 72
TMS4800JL#2	♦TII	81 - 28
TMS4800NL#1	♦TII	79 - 73
TMS4800NL#2	♦TII	81 - 29
TMS4886JC	TII	85 - 79
	TIIB	
TMS5000JC	TII	65 - 61
	TIIB	
TMS5000NC	TII	65 - 62
	TIIB	
TMSR4A	♦WLD	92 - 95
TMSR8	♦WLD	99 - 62
TMSR8A	♦WLD	94 - 77
TMSR16	♦WLD	99 -101
TMSR24	♦WLD	99 -107
TMSR32	♦WLD	99 -109
TR1608	none	44 - 90
TSR2511F	♦TEC	94 - 48
TSR2511J	♦TEC	94 - 49
TSR2512F	♦TEC	94 - 50
TSR2512J	♦TEC	94 - 51

TYPE No.	MFRS	Pg&Line
TSR2513F	♦TEC	94 - 52
TSR2513J	♦TEC	94 - 53
TSR2514F	♦TEC	94 - 54
TSR2514J	♦TEC	92 - 96
uPB226C	NECJ	94 - 2
uPB226D	NECJ	94 - 3
uPB405DE	♦NECM	70 - 95
uPB406D-E	♦NECJ	71 - 34
uPB406DE	♦NECM	72 -104
uPB425DE	♦NECM	70 - 96
uPB426D-E	♦NECJ	71 - 35
uPB426DE	♦NECM	72 -105
uPB2089D	NECJ	22 - 59
	♦NECM	
uPB2091D	NECJ	96 - 83
uPB2164D	NECJ	99 - 8
uPB2170D	NECJ	20 - 55
uPB2175D	NECJ	94 - 29
uPB2195D	NECJ	94 - 4
uPB2198D	NECJ	97 - 20
uPB2200D	NECJ	25 -105
	NECM	
uPB2202D	NECJ	26 - 17
	NECM	
uPB2206D	NECJ	25 -106
	NECM	
uPB2289D	NECJ	22 - 10
	NECM	
uPB7491C	NECJ	99 - 71
uPB10142D	♦NECJ	23 - 6
	NECM	
uPB10144D	♦NECJ	24 - 54
	NECM	
uPB10148D	♦NECJ	23 - 12
	NECM	
uPB10176D	NECJ	96 - 41
uPB74164C	NECJ	99 - 9
uPB74175C	NECJ	93 - 88
uPB74195C	NECJ	93 -102
uPB74198C	NECJ	97 - 45
uPD11A	NECJ	99 - 24
uPD107C	NECJ	101 - 81
uPD109A	NECJ	102 - 55
uPD117C	NECJ	99 - 88
uPD118C	NECJ	100 - 49
uPD122C	NECJ	95 -102
uPD192C	NECJ	103 - 6
uPD308C	NECJ	90 - 10
uPD351C	♦NECJ	102 - 9
uPD358C	♦NECJ	102 - 89
uPD402D	♦NECJ	26 - 98
uPD404D	♦NECJ	32 - 82
	NECM	
uPD405D	♦NECJ	38 - 93
	NECM	
uPD410D1	NECJ	51 - 17
	♦NECM	
uPD410D2	NECJ	51 - 5
	♦NECM	
uPD410D	NECJ	51 - 6
	♦NECM	
uPD410D-1	♦NECJ	51 - 18
	♦NECM	
uPD410D-2	♦NECJ	51 - 29
	♦NECM	
uPD410D-3	♦NECM	49 - 72
uPD410D#	♦NECJ	51 - 30
uPD411AC1	NECJ	48 - 45
	♦NECM	
uPD411AC2	NECJ	48 - 34
	♦NECM	
uPD411AC-E	NECJ	48 - 82
uPD411ACE	NECJ	48 - 83
	♦NECM	
uPD411AD1	NECJ	48 - 46
	♦NECM	
uPD411AD2	NECJ	48 - 35
	♦NECM	
uPD411AD3	♦NECM	48 - 25
uPD411AD4	♦NECM	48 - 24
uPD411AD	NECJ	48 - 64
	♦NECM	
uPD411ADE	NECJ	48 - 84
	♦NECM	
uPD411D1	NECJ	48 - 47
	♦NECM	
uPD411D1M	♦NECM	48 - 48
uPD411D2	NECJ	48 - 36
	♦NECM	
uPD411D2M	♦NECM	48 - 37
uPD411D3	NECJ	48 - 26
	♦NECM	
uPD411DE	NECJ	48 - 85
	♦NECM	
uPD411DM	♦NECM	48 - 65
uPD412C	NECJ	31 - 60
uPD412D	NECJ	30 - 3
	NECM	
uPD414AC	NECJ	48 - 66
uPD414AC-1	NECJ	48 - 49
uPD414AC-E	NECJ	48 - 86
	♦NECM	
uPD414AD	NECJ	48 - 67
uPD414AD-1	NECJ	48 - 50
uPD414AD-E	NECJ	48 - 87
uPD414C1	♦NECJ	48 - 51
	NECM	
uPD414C2	NECM	48 - 38
uPD414C	♦NECJ	48 - 68
	NECM	
uPD414CE	NECM	48 - 88
uPD414D1	♦NECJ	48 - 52
	NECM	
uPD414D2	NECM	48 - 39

♦-Mfr's data sheet available in microfilm service

Cur-In current D.A.T.A.BOOK
Δ-Registered with JEDEC by this manufacturer

Obs-In this book

1. TYPE No. CROSS INDEX

IN TYPE NUMBER SEQUENCE

TYPE No.	MFRS	Pg&Line
uPD414D	♦NECJ	48 - 69
	NECM	
uPD414DE	NECM	48 - 89
uPD416C1	NECM	54 - 42
uPD416C2	NECM	54 - 10
uPD416C3	NECM	53 - 87
uPD416C-E	♦NECJ	54 - 54
uPD416D1	NECM	54 - 43
uPD416D2	NECM	54 - 11
uPD416D3	NECM	53 - 88
uPD416D-E	♦NECJ	54 - 55
uPD418C1	♦NECJ	48 - 53
	♦NECM	
uPD418C2	♦NECJ	48 - 31
	♦NECM	
uPD418C3	♦NECJ	48 - 27
	♦NECM	
uPD418C	♦NECJ	48 - 70
	♦NECM	
uPD418C-1	♦NECJ	48 - 54
uPD418C-2	♦NECJ	48 - 40
uPD418C-3	♦NECJ	48 - 28
uPD418D1	♦NECJ	48 - 55
	♦NECM	
uPD418D2	♦NECJ	48 - 32
	♦NECM	
uPD418D3	♦NECJ	48 - 29
	♦NECM	
uPD418D	♦NECJ	48 - 71
	♦NECM	
uPD418D-1	♦NECJ	48 - 56
uPD418D-2	♦NECJ	48 - 41
uPD418D-3	♦NECJ	48 - 30
uPD421D	NECM	43 - 68
uPD421D-1	NECM	43 - 63
uPD421D-2	NECM	43 - 56
uPD421D-3	NECM	43 - 52
uPD421D-5	NECM	43 - 46
uPD443/6508D-1		35 - 47
	NECM	
uPD443C	NECJ	35 - 83
uPD443C-1	NECJ	35 - 76
uPD443D	NECJ	35 - 84
uPD443D-1	NECJ	35 - 77
uPD444C#	NECM	40 - 90
uPD451D	NECJ	59 - 55
uPD454D	♦NECJ	64 - 94
	♦NECM	
uPD458D	♦NECJ	76 - 47
	♦NECM	
uPD464C	♦NECJ	63 - 31
	NECM	
uPD464D	♦NECJ	63 - 32
	♦NECM	
uPD465D	♦NECJ	74 - 49
	NECM	
uPD466D001	NECM	79 - 24
uPD466D	♦NECJ	79 - 62
	♦NECM	
uPD466D-001	♦NECJ	79 - 63
uPD471D	NECJ	71 - 15
uPD472D01	NECJ	85 - 38
uPD472D	NECJ	73 - 14
uPD473D01	NECJ	86 - 4
uPD473D02	NECJ	84 - 26
uPD473D03	NECJ	85 - 98
uPD473D04	NECJ	84 - 27
uPD473D	NECJ	85 - 91
uPD474D01	NECJ	85 - 97
uPD474D02	NECJ	84 - 25
uPD474D	NECJ	85 -109
uPD501D	NECJ	59 - 29
uPD502D	NECJ	63 - 85
uPD503D	NECJ	69 - 30
uPD2101ALC2	NECJ	31 - 49
	♦NECM	
uPD2101ALC4	NECJ	31 - 61
	♦NECM	
uPD2101ALC	NECJ	31 - 62
	♦NECM	
uPD2101ALC-2	♦NECJ	31 - 63
uPD2101ALC-4	♦NECJ	31 - 64
uPD2102ALC2	NECJ	37 - 60
	NECM	
uPD2102ALC4	NECJ	37 -101
	NECM	
uPD2102ALC	NECJ	39 - 4
	NECM	
uPD2102ALC-2	♦NECJ	38 -105
uPD2102ALC-4	♦NECJ	39 - 5
uPD2111ALC2	NECJ	31 - 50
	♦NECM	
uPD2111ALC4	NECJ	31 - 65
	♦NECM	
uPD2111ALC	♦NECJ	31 - 66
	♦NECM	
uPD2111ALC-2	♦NECJ	31 - 67
uPD2111ALC-4	♦NECJ	31 - 68
uPD2115-1	♦NECM	38 - 99
uPD2115-2	♦NECM	38 - 96
uPD2125-1	♦NECM	38 -100
uPD2125-2	♦NECM	38 - 97
uPD2147D-1	NECJ	51 - 7
uPD2205D	NECM	34 - 80
uPD2308C	♦NECJ	74 - 56
	NECM	
uPD2308D	♦NECJ	74 - 57
	NECM	
uPD2316AC1	♦NECM	79 - 58
uPD2316AC	♦NECJ	79 - 59
	♦NECM	
uPD2316AD1	♦NECM	79 - 60
uPD2316AD	♦NECJ	79 - 61
	♦NECM	

TYPE No.	MFRS	Pg&Line
uPD2417D-2	NECJ	51 - 1
uPD2417D-3	NECJ	50 -104
uPD2716	NECM	79 - 23
uPD4014C	♦NECJ	98 - 56
uPD4015C	♦NECJ	94 -103
uPD4016C1	♦NECJ	44 - 82
uPD4016C2	♦NECJ	44 - 78
uPD4016C3	♦NECJ	44 - 72
uPD4016D1	♦NECJ	44 - 83
uPD4016D2	♦NECJ	44 - 79
uPD4016D3	♦NECJ	44 - 73
uPD4021C	♦NECJ	98 - 57
uPD4035C	♦NECJ	91 - 22
uPD4104C-1#	NECM	51 - 39
uPD4104C-2#	NECM	51 - 31
uPD4104C-30	NECM	50 - 72
uPD4104C-33	NECM	50 - 73
uPD4104C-36	NECM	50 - 74
uPD4104C#	NECM	51 - 43
uPD4104D-1#	NECM	51 - 40
uPD4104D-2#	NECM	51 - 32
uPD4104D-30	NECM	50 - 75
uPD4104D-33	NECM	50 - 76
uPD4104D-35	NECM	50 - 77
uPD4104D-36	NECM	50 - 78
uPD4164D2	NECM	56 - 16
uPD5101-E	NECJ	29 - 52
uPD5101C-E	♦NECJ	28 - 63
uPD5101CE	♦NECJ	29 - 53
	NECM	
uPD5101E	NECM	29 - 54
uPD5101LC1	NECM	29 - 42
uPD6514C	NECM	40 - 91
uPD6514C-1	NECM	41 - 16
uPD6514C-2	NECM	41 - 64
uPD6514C-3	NECM	42 - 9
uPD41046-35	NECM	50 - 79
UA2512	SOD	27 - 56
UA2524	SOD	33 - 1
UA2525D#1	SOD	59 - 30
UA2525D#2	SOD	60 - 91
UA2525D#3	SOD	65 - 65
UA2525D#4	SOD	71 - 29
UA2525F#1	SOD	59 - 41
UA2525F#2	SOD	60 - 92
UA2525F#3	SOD	65 - 66
UA2525F#4	SOD	71 - 30
UA2548#1	SOD	63 - 89
UA2548#2	SOD	66 - 76
UA2548#3	SOD	71 - 43
UA2548#4	SOD	77 - 12
UA2556	SOD	26 -107
UA2564D	SOD	23 - 24
UA2564F	SOD	23 - 25
UA2572D	SOD	65 - 52
UA2596D4#1	SOD	69 - 33
UA2596D4#2	SOD	71 - 91
UA2596D4#3	SOD	77 - 16
UA2596D4#4	SOD	81 - 9
UA2596D8#1	SOD	69 - 34
UA2596D8#2	SOD	71 - 92
UA2596D8#3	SOD	77 - 17
UA2596D8#4	SOD	81 - 10
UA2656	SOD	26 -108
UA2664D	SOD	23 - 49
UA2664F	SOD	23 - 50
UA2764D	SOD	23 - 26
UA2764F	SOD	23 - 27
UA2864D	SOD	23 - 51
UA2864F	SOD	23 - 52
UA3512	SOD	27 - 57
UA3524	SOD	33 - 2
UA3525D#1	SOD	59 - 31
UA3525D#2	SOD	60 - 93
UA3525D#3	SOD	65 - 67
UA3525D#4	SOD	71 - 31
UA3525F#1	SOD	59 - 32
UA3525F#2	SOD	60 - 94
UA3525F#3	SOD	65 - 68
UA3525F#4	SOD	71 - 32
UA3540D4	SOD	85 - 1
UA3540D8	SOD	85 - 2
UA3548#1	SOD	63 - 90
UA3548#2	SOD	66 - 77
UA3548#3	SOD	71 - 44
UA3548#4	SOD	77 - 13
UA3556	SOD	26 -109
UA3564D	SOD	23 - 28
UA3564F	SOD	23 - 29
UA3572D	SOD	65 - 53
UA3596D4#1	SOD	69 - 35
UA3596D4#2	SOD	71 - 93
UA3596D4#3	SOD	77 - 18
UA3596D4#4	SOD	81 - 11
UA3596D8#1	SOD	69 - 36
UA3596D8#2	SOD	71 - 94
UA3596D8#3	SOD	77 - 19
UA3596D8#4	SOD	81 - 12
UA3656	SOD	26 -110
UA3664D	SOD	23 - 53
UA3664F	SOD	23 - 54
UA3764D	SOD	23 - 30
UA3764F	SOD	23 - 31
UA3864D	SOD	23 - 55
UA3864F	SOD	23 - 56
UC6316	♦SOD	100 - 45
UC6550#1	♦SOD	23 - 63
UC6550#2	♦SOD	23 - 64
UC6550D	♦SOD	23 - 32
UC6550F	♦SOD	23 - 33
UC6596S	SOD	73 - 11
UC7316	♦SOD	100 - 46
UC7325#1	♦SOD	105 - 34
UC7325#2	♦SOD	104 - 61

TYPE No.	MFRS	Pg&Line
UC7325#3	♦SOD	102 -100
UC7355	♦SOD	101 - 84
UC7526	SOD	59 - 5
UC7541-03	SOD	84 - 45
UC7541-79	SOD	86 - 32
UC7550#1	♦SOD	23 - 65
UC7550#2	♦SOD	23 - 66
UC7550D	♦SOD	23 - 34
UC7550F	♦SOD	23 - 35
UC7596S	SOD	73 - 12
US5491A	SPR	99 - 72
US5491J	SPR	99 - 73
US5494A	SPR	94 - 60
US5495A	SPR	92 - 43
US5495J	SPR	92 - 44
US5496A	SPR	95 - 47
US7491A	SPR	99 - 74
US7491J	SPR	99 - 75
US7494A	SPR	94 - 61
US7495A	SPR	92 - 45
US7495J	SPR	92 - 46
US7496A	SPR	95 - 48
V2114-UCB	GTE	41 - 65
V2114-UCE	GTE	41 - 66
WD74HC200E#ai	WDC	26 - 88
WD74HC200F#ai	WDC	26 - 89
WD1100-02U#ai	WDC	89 - 26
WD1100-02V#ai	WDC	89 - 27
WD5869J	WDC	107 - 9
WD5869K	WDC	107 - 10
X2201-30#ai	XIC	39 - 2
X2201A30#ai	XIC	23 - 47
X2210-30#ai	XIC	23 - 48
X2212-30#ai	XIC	31 - 54
XC170	♦MOTA	57 - 15
XC171	♦MOTA	57 - 16
XC2201#ai	♦XIC	39 - 3
Z6104-2CS	ZIL	49 - 90
Z6104-2PS	ZIL	49 - 91
Z6104-3CS	ZIL	50 - 8
Z6104-3PS	ZIL	50 - 9
Z6104-4CS	ZIL	50 - 33
Z6104-4PS	ZIL	50 - 34
Z6104L-4CS	ZIL	50 - 35
Z6104L-4PS	ZIL	50 - 36
Z6114-2CS	ZIL	40 - 45
Z6114-2PS	ZIL	40 - 46
Z6114-3CS	ZIL	40 - 92
Z6114-3PS	ZIL	40 - 93
Z6114-4CS	ZIL	41 - 17
Z6114-4PS	ZIL	41 - 18
Z6114-5CS	ZIL	41 - 67
Z6114-5PS	ZIL	41 - 68
Z6114-6CS	ZIL	41 - 71
Z6114-6PS	ZIL	41 - 72
Z6116-2	♦ZIL	53 - 48
Z6116-3	♦ZIL	53 - 49
Z6116-4	♦ZIL	53 - 50
Z6116-5	♦ZIL	53 - 51
Z6132-3CS	ZIL	52 - 63
Z6132-3DS	ZIL	52 - 57
Z6132-3PS	ZIL	52 - 64
Z6132-4CS	ZIL	52 - 65
Z6132-4DS	ZIL	52 - 58
Z6132-4PS	ZIL	52 - 66
Z6132-5CS	ZIL	52 - 67
Z6132-5DS	ZIL	52 - 59
Z6132-5PS	ZIL	52 - 68
Z6132-6CS	ZIL	52 - 60
Z6132-6DS	ZIL	52 - 61
Z6132-6PS	ZIL	52 - 62
Z6142-2CS	ZIL	40 - 47
Z6142-2PS	ZIL	40 - 48
Z6142-3CS	ZIL	40 - 94
Z6142-3PS	ZIL	40 - 95
Z6142-4CS	ZIL	41 - 19
Z6142-4PS	ZIL	41 - 20
Z6142-5CS	ZIL	41 - 69
Z6142-5PS	ZIL	41 - 70
Z6142-6CS	ZIL	41 - 73
Z6142-6PS	ZIL	41 - 74

♦-Mfr's data sheet available in microfilm service

Cur-In current D.A.T.A.BOOK
Obs-In this book
Δ-Registered with JEDEC by this manufacturer

2. READ-WRITE MEMORIES (RAMS)

IN ORDER OF (1)No.WORDS(2)No.BITS/WORD (3)MODE(4)STRUCT.(5)MAX ACC.TIME(6)TYPE No.

LINE No.	6 TYPE NUMBER	ORGANIZATION 1 NO. OF WORDS	2 BITS PER WORD	3 MODE	4 STRUCTURE CODE	5 MAX. ACCESS TIME (S)	MAX. WRITE CYCLE TIME (S)	MAX. POWER DISS. (W)	POWER SUPPLY SPAN NEG. (V)	POS. (V)	INPUT LOGIC LEVELS MAX. '0' (V)	MIN. '1' (V)	MIN.OUTPUT SINK CURRENT (A)	@ OUT (V)	MIN. CLOCK FREQ. (Hz)	OPER TEMP RNGE CODE -	+	DRAWINGS FUNCTIONAL EQUIVALENT NUMBER	OUTLINE
1	MC1680L	2	2	S	BEX	4.0n	5.5n	270m†	5.2	0.0	-1.6%	-.96				0	7	A7a	DL16eq
2	MC1680S	2	2	S	BEX	4.0n	5.5n	270m†	5.2	0.0	-1.6%	-.96				0	7	A7	FL2
3	MC1681L	2	2	S	BEX	4.0n	5.5n	300m†	5.2	0.0	-1.6%	-.96				0	7	A7a	DL16bp
4	MC1681S	2	2	S	BEX	4.0n	5.5n	300m†	5.2	0.0	-1.6%	-.96				0	7	A7	FL2
5	FJB9338	4	2	S	BTX	25n	7.0n$	675m♦	0.0	5.0	.80	2.0	16m	.40		0	7	A112	ML4e
6	MIC9030-5D	4	2	S	BTX	25n	45n	350m†	0.0	4.5	.80	1.25	5.0uΔ			0	7	PN14d	DL14c
7	MC14580AL	4	4		MCX	140n	600n	2.4m♦	0.0	10	.05%	9.95§	1.0uØ			5	C	A205	DL24e
8	MC14580CL	4	4		MCX	210n	900n	56m♦	0.0	10	.05%	9.95§	1.5uØ			4	8	A205	DL24e
9	MC14580CP	4	4		MCX	210n	900n	56m♦	0.0	10	.05%	9.95§	1.5uØ			4	8	A205	DL24br
10	54LS170J	4	4	S	BTD	20n	25n$	200m	0.0	5.0	.70	2.0	4.0m	.40		5	C	74-170	DL⧄
11	54LS170W	4	4	S	BTD	20n	25n$	200m	0.0	5.0	.70	2.0	4.0m	.40		5	C	74-170	FL14h
12	54LS670J	4	4	S	BTD	20n	25n$	250m	0.0	5.0	.70	2.0§	4.0m	.40		5	C	74LS670	DL⧄
13	74LS170J	4	4	S	BTD	20n	25n$	200m	0.0	5.0	.80	2.0	4.0m	.40		0	7	74-170	DL⧄
14	74LS170W	4	4	S	BTD	20n	25n$	200m	0.0	5.0	.80	2.0	4.0m	.40		0	7	74-170	FL14h
15	74LS670J	4	4	S	BTD	20n	25n$	250m	0.0	5.0	.80	2.0§	4.0m	.40		0	7	74LS670	DL⧄
16	74LS670W	4	4	S	BTD	20n	25n$	250m	0.0	5.0	.80	2.0§	4.0m	.40		0	7	74LS670	FL14h
17	DM54LS170N	4	4	S	BTD	20n	25n$	200m	0.0	5.0	.70	2.0Δ	4.0m	.40		5	C	74-170	DL16bh
18	DM74LS170J	4	4	S	BTD	20n	25n$	200m	0.0	5.0	.80	2.0Δ	4.0m	.40		0	7	74-170	DL16cr
19	DM74LS170W	4	4	S	BTD	20n	25n$	200m	0.0	5.0	.80	2.0Δ	4.0m	.40		0	7	74-170	FL39
20	SN74LS170W	4	4	S	BTD	20n	25n$	200m	0.0	5.0	.80	2.0	4.0m	.40		0	7	74-170	FL34
21	SN74LS670W	4	4	S	BTD	20n	25n$	250m	0.0	5.0	.80	2.0§	4.0m	.40		0	7	74LS670	FL34
22	25LS670JC	4	4	S	BTD	45n	25n$	250m	0.0	5.0	.80	2.0§	4.0m	.40		0	7	74LS670	DL⧄
23	25LS670JM	4	4	S	BTD	45n	25n$	250m	0.0	5.0	.70	2.0§	4.0m	.40		5	C	74LS670	DL⧄
24	25LS670WC	4	4	S	BTD	45n	25n$	250m	0.0	5.0	.80	2.0§	4.0m	.40		0	7	74LS670	FL14h
25	25LS670WM	4	4	S	BTD	45n	25n$	250m	0.0	5.0	.70	2.0§	4.0m	.40		5	C	74LS670	FL14h
26	RC54170B	4	4	S	BTX		25n	750m♦	0.0	5.0	.80	2.0	16m	.40		5	C	74-170	DL16fm
27	RC54170F	4	4	S	BTX		25n	750m♦	0.0	5.0	.80	2.0	16m	.40		5	C	74-170	DL16fi
28	RC54170W	4	4	S	BTX		25n	750m♦	0.0	5.0	.80	2.0	16m	.40		5	C	54-170	FL25
29	DM74170J	4	4	S	BTX	20n	25n$	750m	0.0	5.0	.80	2.0Δ	16m	.40		0	7	74-170	DL16cr
30	M74LS630P	4	4	S	BTX	20n	25n$	262m	0.0	5.0	0.8	2.0	4.0m	0.4		0	7	74LS670	DL16fe
31	MB460	4	4	S	BTX	20n	25n$	560m†	0.0	5.0	.80	2.1§	16m	.40		0	7	74-170	DL16au
32	MB460M	4	4	S	BTX	20n	25n$	560m†	0.0	5.0	.80	2.1§	16m	.40		0	7	74-170	ML221
33	RC54LS170F	4	4	S	BTX	20n	25n$	210m	0.0	5.0	.80	2.0Δ	4.0m	.40		5	C	74-170	DL16cu
34	RC54LS170W	4	4	S	BTX	20n	25n$	210m	0.0	5.0	.80	2.0Δ	4.0m	.40		5	C	54-170	FL25
35	RL80D	4	4	S	BTX	20n	25n$	300m	0.0	5.0	.80	1.8	40m%	.40		5	C	74-81	ML19b
36	RL80K	4	4	S	BTX	20n	25n$	300m	0.0	5.0	.80	1.8	40m%	.40		5	C	74-81	FL11
37	RL81D	4	4	S	BTX	20n	25m$	300m	0.0	5.0	.80	1.8	20m%	.40		5	C	74-81	ML19b
38	RL81K	4	4	S	BTX	20n	25n$	300m	0.0	5.0	.80	1.8	20m%	.40		5	C	74-81	FL11
39	RL82D	4	4	S	BTX	20n	25n$	300m	0.0	5.0	.90	2.0	40m%	.40		0	7	74-81	ML19b
40	RL82K	4	4	S	BTX	20n	25n$	300m	0.0	5.0	.90	2.0	40m%	.40		0	7	74-81	FL11
41	RL83D	4	4	S	BTX	20n	25n$	300m	0.0	5.0	.90	2.0	20m%	.40		0	7	74-81	ML19b
42	RL83K	4	4	S	BTX	20n	25n$	300m	0.0	5.0	.90	2.0	20m%	.40		0	7	74-81	FL11
43	TMC3362F	4	4	S	BTX	20n	25n$	300m♦	0.0	5.0	1.0	2.1	40m	.45		0	7	A45	TO86
44	TMC3362J	4	4	S	BTX	20n	25n$	300m♦	0.0	5.0	1.0	2.1	40m	.45		0	7	A45	TO116
45	TMC3364F	4	4	S	BTX	20n	25n$	300m♦	0.0	5.0	1.0	2.1	20m	.45		0	7	A45	TO86
46	TMC3364J	4	4	S	BTX	20n	25n$	300m♦	0.0	5.0	1.0	2.1	20m	.45		0	7	A45	TO116
47	TMC3762F	4	4	S	BTX	20n	25n$	300m♦	0.0	5.0	1.0	2.1	40m	.45		0	7	A45	TO86
48	TMC3762J	4	4	S	BTX	20n	25n$	300m♦	0.0	5.0	1.0	2.1	40m	.45		0	7	A45	TO116
49	TMC3764F	4	4	S	BTX	20n	25n$	300m♦	0.0	5.0	1.0	2.1	20m	.45		0	7	A45	TO86
50	TMC3764J	4	4	S	BTX	20n	25n$	300m♦	0.0	5.0	1.0	2.1	20m	.45		0	7	A45	TO116
51	TMC3363F	4	4	S	BTX	23n	25n$	300m♦	0.0	5.0	.90	2.2	20m	.45		5	C	A45	TO86
52	TMC3363J	4	4	S	BTX	23n	25n$	300m♦	0.0	5.0	.90	2.2	20m	.45		5	C	A45	TO116
53	TMC3763F	4	4	S	BTX	23n	25n$	300m♦	0.0	5.0	.90	2.2	20m	.45		5	C	A45	TO86
54	TMC3763J	4	4	S	BTX	23n	25n$	300m♦	0.0	5.0	.90	2.2	20m	.45		5	C	A45	TO116
55	uPB2170D	4	4	S	BTX	30n		630m⧄	0.0	5.0	.80	2.0				2	7	PN16q	DL16cw
56	FLQ131-74170	4	4	S	BTX	40n	25n	700m	0.0	5.0	.80	2.0	16m	.40		0	7	74-170	DL⧄
57	FLQ135-84170	4	4	S	BTX	40n	25n	700m	0.0	5.0	.80	2.0	16m	.40		2	8	74-170	DL⧄
58	CD40108BK	4	4	S	MCX	110n	45n$	500m⧄	0.0	15	0.0†	15	6.0m	1.5		5	C	PN24b	FL28
59	D4218	4	16	S	BTX	45n	40n	1.8	0.0	5.0	.80	2.0	40m	.45		0	7	A100	PL7
60	FJB9334	8	1	S	BTX	35n	29n$	430m♦	0.0	5.0	.80	2.0	9.6m	.40		0	7	A113	ML4e
61	74172	8	2	S	BTX	50n	90n$	850m	0.0	5.0	.80	2.0	16m	.40		0	7	PN24a	DL⧄
62	84172	8	2	S	BTX	50n	90n$	850m	0.0	5.0	.80	2.0	16m	.40		2	8	PN24a	DL⧄
63	N82S112F	8	4	S	BTD	40n	45n$	800m	0.0	5.0	.85	2.0§	9.6m	.45		1	7	A397	DL24cb
64	N82S112N	8	4	S	BTD	40n	45n$	800m	0.0	5.0	.85	2.0§	9.6m	.45		1	7	A397	DL24ar
65	CD4005	16	1	s	MCX	25n	75n$	100n†♦	0.0	10						5	C	A38	FL6
66	HM2101	16	1	S	BEX		15n	500mØ	5.0	0.0	1.8%	.74				0	7	A33	ML109
67	91100111	16	1	S	BEX	5.0n		390m†Ø	5.2	0.0	-1.3Ø	-1.0	25m⧄			0	7	A10	TO116
68	CD2155D	16	1	S	BEX	6.5n	25n	315mØ	5.0	0.0	-1.5%	-.85				5	C	A33	ML16
69	MC1036F	16	1	S	BEX	22n	25n$	250m†	5.2	0.0	-1.5	-.85	10m	-.85		0	7	A32	TO86
70	MC1036P	16	1	S	BEX	22n	25n$	250m†	5.2	0.0	-1.5	-.85	10m	-.85		0	7	A32	DL14p
71	MC1037F	16	1	S	BEX	22n	25n$	250m†	5.2	0.0	-1.5	-.85	10m	-.85		0	7	A32	TO86
72	MC1037P	16	1	S	BEX	22n	25n$	250m†	5.2	0.0	-1.5	-.85	10m	-.85		0	7	A32	DL14p
73	MC1236L	16	1	S	BEX	22n	25n$	250m†	5.2	0.0	-1.5	-.85	10m	-.85		5	C	A32	DL14q
74	MC1237L	16	1	S	BEX	22n	25n$	250m†	5.2	0.0	-1.5	-.85	10m	-.85		5	C	A32	DL14q
75	HD2316	16	1	S	BTX		20n		0.0	5.0	.65%	5.3	6.0mØ	.48		6	H	A93	ML109
76	FLQ111-7481A	16	1	S	BTX	20n	30n$	325m	0.0	5.0	.80	2.0	40m	.40		0	7	A306	DL⧄
77	FLQ115-8481A	16	1	S	BTX	20n	30n$	325m	0.0	5.0	.80	2.0	40m	.40		2	8	A306	DL⧄
78	FLQ121-7484A	16	1	S	BTX	20n	30n$	325m	0.0	5.0	.80	2.0	40m	.40		0	7	A306a	DL⧄
79	FLQ125-8484A	16	1	S	BTX	20n	30n$	325m	0.0	5.0	.80	2.0	40m	.40		2	8	A306a	DL⧄
80	IM5502#1	16	1	S	BTX	20n	25n$	325m♦	0.0	5.0	.80	2.0	40m	.45		5	C	A32	ML19
81	IM5502#2	16	1	S	BTX	20n	25n$	325m♦	0.0	5.0	.80	2.1	40m	.45		0	7	A32	ML19
82	IM5512#1	16	1	S	BTX	20n	25n$	325m♦	0.0	5.0	.80	2.0	20m	.45		5	C	A32	ML19
83	IM5512#2	16	1	S	BTX	20n	25n$	325m♦	0.0	5.0	.80	2.1	20m	.45		0	7	A32	ML19
84	IM5522	16	1	S	BTX	20n	35n	325m	0.0	5.0	.80	2.0	40m	.45		0	7	A32	
85	IM5532	16	1	S	BTX	20n	35n	325m	0.0	5.0	.80	2.0	20m	.45		0	7	A32	
86	MIC5481J	16	1	S	BTX	20n		275m†	0.0	5.0	.80	2.1	20m	.40		5	C	A45	TO116
87	MIC5484J	16	1	S	BTX	20n		275m†	0.0	5.0	.80	2.1	20m	.40		5	C	A84	DL16fg
88	MIC6481J	16	1	S	BTX	20n		275m†	0.0	5.0	.80	2.1	40m	.40		4	8	A45	TO116
89	MIC6484J	16	1	S	BTX	20n		275m†	0.0	5.0	.80	2.1	40m	.40		4	8	A84	DL16fg
90	MIC7481J	16	1	S	BTX	20n		275m†	0.0	5.0	.80	2.1	40m	.40		0	7	A45	TO116
91	MIC7481N	16	1	S	BTX	20n		275m†	0.0	5.0	.80	2.1	40m	.40		0	7	A45	DL14w
92	MIC7484J	16	1	S	BTX	20n		275m†	0.0	5.0	.80	2.1	40m	.40		0	7	A84	DL16fg
93	MIC7484N	16	1	S	BTX	20n		275m†	0.0	5.0	.80	2.1	40m	.40		0	7	A84	DL16fo
94	SN5481AN	16	1	S	BTX	20n	25n$	225m†	0.0	5.0	.80	2.0	20m	.40		5	C	74-81	DL14v
95	SN5484AN	16	1	S	BTX	20n	25n$	225m†	0.0	5.0	.80	2.0	20m	.40		5	C	A67	DL16ey
96	SN7481AW	16	1	S	BTX	20n	25n$	225m†	0.0	5.0	.80	2.0	40m	.40		0	7	74-81	MO004AA
97	SN7484AW	16	1	S	BTX	20n	25n$	225m†	0.0	5.0	.80	2.0	40m	.40		0	7	A67	MO004AG
98	MIC5033-5D1	16	1	S	BTX	22n	25n$	250m†	0.0	5.0	1.0	2.1	20m%			0	7	74-81	TO116
99	MIC5033-5D2	16	1	S	BTX	22n	25n$	250m†	0.0	5.0	1.0	2.1	20m%			0	7	74-81	TO116
100	MIC9033-5D1	16	1	S	BTX	22n	25n$	250m†	0.0	5.0	1.0	2.1	40m%			0	7	A27a	TO116
101	MIC9033-5D2	16	1	S	BTX	22n	25n$	250m†	0.0	5.0	1.0	2.1	20m%			0	7	A27a	TO116
102	93433ADC	16	1	S	BTX	30n	25n$	357m	0.0	5.0	.80	2.1	20m	.45		0	7	PN14a	TO116
103	93433AFC	16	1	S	BTX	30n	25n$	357m	0.0	5.0	.80	2.1	20m	.45		0	7	PN14a	TO86
104	93433BDC	16	1	S	BTX	30n	25n$	357m	0.0	5.0	.80	2.1	20m	.45		0	7	PN14a	TO116
105	93433BDM	16	1	S	BTX	30n	25n$	357m	0.0	5.0	.80	2.1	20m	.45		5	C	PN14a	TO116
106	93433BFC	16	1	S	BTX	30n	25n$	357m	0.0	5.0	.80	2.1	20m	.45		0	7	PN14a	TO86
107	93433BFM	16	1	S	BTX	30n	25n$	357m	0.0	5.0	.80	2.1	20m	.45		5	C	PN14a	TO86
108	HRAM0016-2	16	1	S	BTX	30n	60n	325m♦	0.0	5.0	.80	2.1	20m	.40		5	C	74-81	TO116
109	HRAM0016-5	16	1	S	BTX	30n	60n	325m♦	0.0	5.0	.80	2.1	20m	.40		0	7	74-81	TO116
110	HM2501	16	1	S	BTX	35n	50n	340m	0.0	5.0	1.0	2.0	40m	.45		2	7	A107	ML66c

SYMBOLS AND CODES EXPLAINED IN INTERPRETER

2. READ-WRITE MEMORIES (RAMS)

IN ORDER OF (1)No.WORDS(2)No.BITS/WORD (3)MODE(4)STRUCT.(5)MAX ACC.TIME(6)TYPE No.

LINE No.	6 TYPE NUMBER	ORGANIZATION 1 NO. OF WORDS	2 BITS PER WORD	3 MODE	4 STRUCTURE CODE	5 MAX. ACCESS TIME (S)	MAX. WRITE CYCLE TIME (S)	MAX. POWER DISS. (W)	POWER SUPPLY SPAN NEG. (V)	POS. (V)	INPUT LOGIC LEVELS MAX. '0' (V)	MIN. '1' (V)	MIN.OUTPUT SINK CURRENT (A)	@ OUT (V)	MIN. CLOCK FREQ. (Hz)	OPER TEMP RNGE CODE -	+	DRAWINGS FUNCTIONAL EQUIVALENT NUMBER	OUTLINE
1	MC4005F	16	1	S	BTX	35n	25n$	250m♦†	0.0	5.0	.45%	2.5	20m	.45		0	7	74-81	TO86
2	MC5484L	16	1	S	BTX	35n	60n	250m†	0.0	5.0	.45%		40m	.45		5	C	A67	DL16bp
3	MC7484L	16	1	S	BTX	35n	60n	250m†	0.0	5.0	.45%		20m	.45		0	7	A67	DL16bp
4	MC7484P	16	1	S	BTX	35n	60n	250m†	0.0	5.0	.45%		20m	.45		0	7	A67	DL16eu
5	CD4005D	16	1	S	MCX	25n	75n$	100n†♦	0.0	10						5	C	A38	ML16
6	DM74L89AW	16	4		BTX	150n	50n$	95m	0.0	5.0	.70	2.0	3.6m	.40		0	7	74-89	FL39
7	HM2502	16	4	D	BTX	60n	40n$	750m∅	0.0	5.0	.80	2.0	16m	.45		2	7	PN16f	ML120
8	TM101	16	4	S		50n	35n$	500m	0.0	5.0	.80	2.0	100u△	2.4		0	7	74S189	DL16fp
9	CM2100	16	4	S		60n	25n$	640m♦	0.0	5.0	.80	2.0	16m	.40		6	C	A3	DL16ek
10	27S02AJC	16	4	S	BED	25n	20n$	525m	0.0	5.0	.80	2.0△	10m	.50		0	7	A382	DL16bi
11	27S02ANC	16	4	S	BED	25n	20n$	525m	0.0	5.0	.80	2.0△	10m	.50		0	7	A382	DL16dj
12	27S03AJC	16	4	S	BED	25n	20n$	525m	0.0	5.0	.80	2.0§	10m	.50		0	7	A382	DL16bi
13	27S03ANC	16	4	S	BED	25n	20n$	525m	0.0	5.0	.80	2.0§	10m	.50		0	7	A382	DL16dj
14	27S02AFM	16	4	S	BED	30n	25n$	525m	0.0	5.0	.80	2.0△	8.0m	.45		5	C	A382	FL49
15	27S02AJM	16	4	S	BED	30n	25n$	525m	0.0	5.0	.80	2.0△	8.0m	.45		5	C	A382	DL16bi
16	27S03AFM	16	4	S	BED	30n	25n$	525m	0.0	5.0	.80	2.0§	8.0m	.45		5	C	A382	FL49
17	27S03AJM	16	4	S	BED	30n	25n$	525m	0.0	5.0	.80	2.0§	8.0m	.45		5	C	A382	DL16bi
18	27LS02AJC	16	4	S	BED	55n	45n$	190m	0.0	5.0	.80	2.0△	10m	.50		0	7	A382	DL16bi
19	27LS02ANC	16	4	S	BED	55n	45n$	190m	0.0	5.0	.80	2.0△	10m	.50		0	7	A382	DL16dj
20	27LS03AJC	16	4	S	BED	55n	45n$	190m	0.0	5.0	.80	2.0§	10m	.50		0	7	A382	DL16bi
21	27LS03ANC	16	4	S	BED	55n	45n$	190m	0.0	5.0	.80	2.0§	10m	.50		0	7	A382	DL16dj
22	27LS02AFM	16	4	S	BED	65n	55n$	190m	0.0	5.0	.80	2.0△	8.0m	.45		5	C	A382	FL49
23	27LS02AJM	16	4	S	BED	65n	55n$	190m	0.0	5.0	.80	2.0△	8.0m	.45		5	C	A382	DL16bi
24	27LS03AFM	16	4	S	BED	65n	55n$	190m	0.0	5.0	.80	2.0§	8.0m	.45		5	C	A382	FL49
25	27LS03AJM	16	4	S	BED	65n	55n$	190m	0.0	5.0	.80	2.0§	8.0m	.45		5	C	A382	DL16bi
26	F10145APC	16	4	S	BEX	9.0n	4.0n$	650m	5.2	0.0	-1.4	-1.1				0	7	A318	DL16dh
27	SN10145J	16	4	S	BEX	9.0n	7.5n$	780m	5.2	0.0	-1.6	-.98				0	8	A179	DL16fh
28	SN10145JE	16	4	S	BEX	9.0n	7.5n$	780m	5.2	0.0	-1.6	-.98				0	8	A179	DL24s
29	MB10145	16	4	S	BEX	13n	13n$	754m	5.2	0.0	-1.6	-.96				3	8	PN16o	DL16u
30	MCM10145F	16	4	S	BEX	15n	8.0n$	650m	5.2	0.0	-1.4	-1.1	50m∅			0	7	A318	FL34
31	MCM10545F	16	4	S	BEX	18n	8.0n$	650m	5.2	0.0	-1.4	-1.1	50m∅			5	C	A318	FL34
32	MCM10545L	16	4	S	BEX	18n	8.0n$	650m	5.2	0.0	-1.4	-1.1	50m∅			5	C	A318	DL16db
33	MD5501	16	4	S	BTC	50n	25n$	575m	0.0	5.5	.80	2.0	10m	.40		5	C	A3	DL16ek
34	MD6501	16	4	S	BTC	50n	25n$	575m	0.0	5.5	.85	2.0	15m	.45		0	7	A3	DL16ek
35	MD5500	16	4	S	BTC	60n	25n$	575m	0.0	5.5	.80	2.0	10m	.40		5	C	A3	DL16ek
36	MD6500	16	4	S	BTC	60n	25n$	575m	0.0	5.5	.85	2.0	15m	.45		0	7	A3	DL16ek
37	N74LS89F	16	4	S	BTD			185m	0.0	5.0	.80	2.0△	12m	.40		0	7	74-89	DL16cv
38	N74LS89N	16	4	S	BTD			185m	0.0	5.0	.80	2.0△	12m	.40		0	7	74-89	MO001AE
39	N74LS189F	16	4	S	BTD			185m	0.0	5.0	.80	2.0§	24m	.50		0	7	A73	DL16cv
40	N74LS189N	16	4	S	BTD			185m	0.0	5.0	.80	2.0§	24m	.50		0	7	A73	DL16fn
41	S54LS89F	16	4	S	BTD			225m	0.0	5.0	.80	2.0△	16m	.50		5	C	A73	DL16cv
42	S54LS189F	16	4	S	BTD			245m	0.0	5.0	.80	2.0§	12m	.40		5	C	A73	DL16cv
43	SN54LS89J	16	4	S	BTD				0.0	5.0	.70	2.0△	4.0m	.40		5	C	PN16aw	DL16db
44	SN54LS89W	16	4	S	BTD				0.0	5.0	.70	2.0△	4.0m	.40		5	C	PN16aw	FL34
45	SN74LS89J	16	4	S	BTD				0.0	5.0	.80	2.0△	8.0m	.50		0	7	PN16aw	DL16db
46	SN74LS89N	16	4	S	BTD				0.0	5.0	.80	2.0△	8.0m	.50		0	7	PN16aw	DL16ex
47	SN74LS89W	16	4	S	BTD				0.0	5.0	.80	2.0△	8.0m	.50		0	7	PN16aw	FL34
48	SN74LS189W	16	4	S	BTD				0.0	5.0	.80	2.0§				0	7	PN16bc	FL34
49	SN74LS289W	16	4	S	BTD				0.0	5.0	.80	2.0△				0	7	PN16bc	FL63
50	29700JC	16	4	S	BTD	25n	20n$	525m	0.0	5.0	.80	2.0△	10m	.50		0	7	A385	DL16bi
51	29700NC	16	4	S	BTD	25n	20n$	525m	0.0	5.0	.80	2.0△	10m	.50		0	7	A385	DL16dj
52	29701JC	16	4	S	BTD	25n	20n$	525m	0.0	5.0	.80	2.0§	10m	.50		0	7	A385	DL16bi
53	29701NC	16	4	S	BTD	25n	20n$	525m	0.0	5.0	.80	2.0§	10m	.50		0	7	A385	DL16dj
54	29702JC	16	4	S	BTD	25n	20n$	525m	0.0	5.0	.80	2.0△	10m	.50		0	7	A385a	DL16bi
55	29702NC	16	4	S	BTD	25n	20n$	525m	0.0	5.0	.80	2.0△	10m	.50		0	7	A385a	DL16dj
56	29703JC	16	4	S	BTD	25n	20n$	525m	0.0	5.0	.80	2.0§	10m	.50		0	7	A385a	DL16bi
57	29703NC	16	4	S	BTD	25n	20n$	525m	0.0	5.0	.80	2.0§	10m	.50		0	7	A385a	DL16dj
58	75S68J	16	4	S	BTD	30n	20n$	500m	0.0	5.0	.80	2.0§	16m	.50		5	C	A294	DL18q
59	29700FM	16	4	S	BTD	30n	25n$	525m	0.0	5.0	.80	2.0△	10m	.50		5	C	A385	FL49
60	29700JM	16	4	S	BTD	30n	25n$	525m	0.0	5.0	.80	2.0△	10m	.50		5	C	A385	DL16bi
61	29701FM	16	4	S	BTD	30n	25n$	525m	0.0	5.0	.80	2.0§	10m	.50		5	C	A385	FL49
62	29701JM	16	4	S	BTD	30n	25n$	525m	0.0	5.0	.80	2.0§	10m	.50		5	C	A385	DL16bi
63	29702FM	16	4	S	BTD	30n	25n$	525m	0.0	5.0	.80	2.0△	10m	.50		5	C	A385a	FL49
64	29702JM	16	4	S	BTD	30n	25n$	525m	0.0	5.0	.80	2.0△	10m	.50		5	C	A385a	DL16bi
65	29703FM	16	4	S	BTD	30n	25n$	525m	0.0	5.0	.80	2.0§	10m	.50		5	C	A385a	FL49
66	29703JM	16	4	S	BTD	30n	25n$	525m	0.0	5.0	.80	2.0§	10m	.50		5	C	A385a	DL16bi
67	6560D	16	4	S	BTD	35n	25n$	525m♦	0.0	5.0	.80	2.0△	15m	.50		0	7	74S189	DL16v
68	6561D	16	4	S	BTD	35n	25n$	625m♦	0.0	5.0	.80	2.0§	15m	.50		0	7	74S189	DL16v
69	D3101A	16	4	S	BTD	35n	25n$	525m♦	0.0	5.0	.85	2.0	15m	.45		0	7	PN16a	DL16dq
70	DM74S289W	16	4	S	BTD	35n	25n$	525m	0.0	5.0	.80	2.0△	16m	.45		0	7	74S189	FL39
71	GTB3101AD	16	4	S	BTD	35n	25n	375m†	0.0	5.0	.80	2.0	1.5m	.30		0	7	74S189	ML127g
72	N3101AB	16	4	S	BTD	35n	25n	525m	0.0	5.0	.85	2.0△	16m	.45		0	7	74S189	DL16fm
73	SFC80101AK	16	4	S	BTD	35n	25n	525m	0.0	5.0	.85	2.0	15m	.45		0	8	PN16a	DL16fb
74	T54S89J	16	4	S	BTD	35n	40n$	375m	0.0	5.0	.80	2.0	20m	.50		5	C	PN16f	TO116
75	T74S89J	16	4	S	BTD	35n	40n$	375m	0.0	5.0	.80	2.0	20m	.50		0	7	PN16f	TO116
76	85S68N	16	4	S	BTD	40n	20n$	500m	0.0	5.0	.80	2.0§	16m	.50		0	7	A294	DL18bd
77	6560N	16	4	S	BTD	50n	35n$	525m	0.0	5.0	.80	2.0△	15m	.50		0	7	74S189	DL16dj
78	6561N	16	4	S	BTD	50n	35n$	625m	0.0	5.0	.80	2.0§	15m	.50		0	7	74S189	DL16dj
79	FJB93404	16	4	S	BTD	50n	30n$	384m†	0.0	5.0	.80	2.0	15m	.45		0	7	PN16bb	ML4e
80	GTC3101AD	16	4	S	BTD	50n	40n	375m†	0.0	5.0	.80	2.0	1.5m	.30		5	C	74S189	ML127g
81	N82S25B	16	4	S	BTD	50n	35n	6.2m%†	0.0	5.0	.85	2.0△	16m	.45		0	7	74-89	DL16fm
82	N82S25W	16	4	S	BTD	50n	30n$			7.0	0.85	2.0△	16m	0.45		0	7	54-89	FL16△
83	RC3101AF	16	4	S	BTD	50n	30n$	600m	0.0	5.0	.80	2.0△	16m	.50		5	C	54-89	DL16cv
84	DM75S68D	16	4	S	BTD	55n		500m	0.0	5.0	.80	2.0§	16m	.50		5	C	A294	DL18w
85	9410DC	16	4	S	BTD	58n	26n	375m	0.0	5.0	.80	2.0	16m	.50		0	7	A431	DL18aw
86	9410DM	16	4	S	BTD	58n	26n	375m	0.0	5.0	.80	2.0	8.0m	.40		5	C	A431	DL18aw
87	5560D	16	4	S	BTD	60n	40n$	525m♦	0.0	5.0	.80	2.0△	10m	.50		5	C	74S189	DL16v
88	5560N	16	4	S	BTD	60n	40n$	525m♦	0.0	5.0	.80	2.0△	10m	.50		5	C	74S189	DL16da
89	5561D	16	4	S	BTD	60n	40n$	625m♦	0.0	5.0	.80	2.0§	10m	.50		5	C	74S189	DL16v
90	5561N	16	4	S	BTD	60n	40n$	625m♦	0.0	5.0	.80	2.0§	10m	.50		5	C	74S189	DL16da
91	93403DM	16	4	S	BTD	60n	40n$	525m♦	0.0	5.0	.80	2.0	16m	.45		5	C	74-89	DL16ay
92	93403FM	16	4	S	BTD	60n	40n$	525m♦	0.0	5.0	.80	2.0	16m	.45		5	C	54-89	FL33
93	93403PC	16	4	S	BTD	60n	40n$	525m♦	0.0	5.0	.80	2.0	16m	.45		0	7	74-89	DL16bw
94	D3101	16	4	S	BTD	60n	40n$	525m♦	0.0	5.0	.85	2.0	15m	.45		0	7	PN16a	DL16dq
95	MCM4064L	16	4	S	BTD	60n		551m	0.0	5.0	0.8	2.0				0	8	A493	DL16ex
96	MCM4364L	16	4	S	BTD	60n		551m	0.0	5.0	0.8	2.0				5	C	A493	DL16ex
97	RC82S25F	16	4	S	BTD	60n	30n$	600m	0.0	5.0	.80	2.0△	16m	.50		5	C	74-89	DL16cv
98	SFC80101K	16	4	S	BTD	60n	45n	525m	0.0	5.0	.85	2.0	15m	.45		0	8	PN16a	DL16fb
99	5560F	16	4	S	BTD	75n	50n$	525m	0.0	5.0	.80	2.0△	10m	.50		5	C	74S189	FL49
100	5560J	16	4	S	BTD	75n	50n$	525m	0.0	5.0	.80	2.0△	10m	.50		5	C	74S189	DL16bi
101	5561F	16	4	S	BTD	75n	50n$	625m	0.0	5.0	.80	2.0§	10m	.50		5	C	74S189	FL49
102	5561J	16	4	S	BTD	75n	50n$	625m	0.0	5.0	.80	2.0§	10m	.50		5	C	74S189	DL16bi
103	DM74LS189J	16	4	S	BTD	80n	60n$	145m	0.0	5.0	.80	2.0§	8.0m	.50		0	7	PN16bf	DL16cr
104	DM74LS189N	16	4	S	BTD	80n	60n$	145m	0.0	5.0	.80	2.0§	8.0m	.50		0	7	PN16bf	DL16bh
105	DM74LS289J	16	4	S	BTD	90n	80n$	145m	0.0	5.0	.80	2.0△	8.0m	.50		0	7	PN16bf	DL16cr
106	DM74LS289N	16	4	S	BTD	90n	80n$	145m	0.0	5.0	.80	2.0△	8.0m	.50		0	7	PN16bf	DL16bh
107	DM54LS189J	16	4	S	BTD	100n	80n$	145m	0.0	5.0	.80	2.0§	4.0m	.45		5	C	PN16bf	DL16cr
108	DM54LS189W	16	4	S	BTD	100n	80n$	145m	0.0	5.0	.80	2.0§	4.0m	.45		5	C	PN16bf	FL39
109	L6560N	16	4	S	BTD	100n	80n$	240m	0.0	5.0	.80	2.0△	4.8m	.50		0	7	74S189	DL16dj
110	L6561N	16	4	S	BTD	100n	80n$	240m	0.0	5.0	.80	2.0§	4.8m	.50		0	7	74S189	DL16dj

SYMBOLS AND CODES EXPLAINED IN INTERPRETER

2. READ-WRITE MEMORIES (RAMS)

IN ORDER OF (1)No.WORDS(2)No.BITS/WORD (3)MODE(4)STRUCT.(5)MAX ACC.TIME(6)TYPE No.

LINE No.	6 TYPE NUMBER	ORGANIZATION 1 NO. OF WORDS	2 BITS PER WORD	3 MODE	4 STRUCTURE CODE	5 MAX. ACCESS TIME (S)	MAX. WRITE CYCLE TIME (S)	MAX. POWER DISS. (W)	POWER SUPPLY SPAN NEG. (V)	POS. (V)	INPUT LOGIC LEVELS MAX. '0' (V)	MIN. '1' (V)	MIN.OUTPUT SINK CURRENT (A)	@ OUT (V)	MIN. CLOCK FREQ. (Hz)	OPER TEMP RNGE CODE -	+	DRAWINGS FUNCTIONAL EQUIVALENT NUMBER	OUTLINE
1	DM54LS289J	16	4	S	BTD	110n	100n$	145m	0.0	5.0	.80	2.0Δ	4.0m	.45		5	C	PN16bf	DL16cr
2	DM54LS289W	16	4	S	BTD	110n	100n$	145m	0.0	5.0	.80	2.0Δ	4.0m	.45		5	C	PN16bf	FL39
3	L5560F	16	4	S	BTD	120n	125n$	270m	0.0	5.0	.80	2.0Δ	4.8m	.50		5	C	74S189	FL49
4	L5560J	16	4	S	BTD	120n	125n$	270m	0.0	5.0	.80	2.0Δ	4.8m	.50		5	C	74S189	DL16bi
5	L5561F	16	4	S	BTD	120n	125n$	270m	0.0	5.0	.80	2.0§	4.8m	.50		5	C	74S189	FL49
6	L5561J	16	4	S	BTD	120n	125n$	270m	0.0	5.0	.80	2.0§	4.8m	.50		5	C	74S189	DL16bi
7	5587#2	16	4	S	BTX	28n	30n	1.6 †	0.0	5.0	.80	2.0				0	7		
8	93435-1-6P	16	4	S	BTX	35n	25n	590m	0.0	5.0	.90	2.0	10m	.40		5	C	A29	ML53
9	93435DC	16	4	S	BTX	35n	25n$	651m	0.0	5.0	.85	2.0	10m	.45		0	7	A29	ML101
10	uPB2289D	16	4	S	BTX	35n	25n$	575m	0.0	5.0	.80	2.0	16m	.50		0	6	A217	ML127n
11	DM54L89AN	16	4	S	BTX	50n	30n$	95m	0.0	5.0	.70	2.0	2.0m	.30		5	C	74-89	DL16bh
12	DM74L89AJ	16	4	S	BTX	50n	30n$	95m	0.0	5.0	.70	2.0	3.6m	.40		0	7	74-89	DL16cr
13	DM8599J	16	4	S	BTX	50n	40n$	600m	0.0	5.0	.80	2.0§	12m	.40		0	7	74-89	DL16cr
14	DM8599N	16	4	S	BTX	50n	40n$	600m	0.0	5.0	.80	2.0§	12m	.40		0	7	74-89	DL16bh
15	FJQ111	16	4	S	BTX	50n	30n	6.0m%	0.0	5.0	.80	2.0	15m	.45		0	7	A105	ML2f
16	MM5501#1	16	4	S	BTX	50n	25n$	6.0m%	0.0	5.0	.80	2.0	10m	.40		5	C	A3	ML55
17	MM5501#2	16	4	S	BTX	50n	25n$	6.0m%	0.0	5.0	.80	2.0	10m	.40		5	C	A3	ML56
18	MM6501#1	16	4	S	BTX	50n	25n$	6.0m%	0.0	5.0	.85	2.0	15m	.45		0	7	A3	ML55
19	MM6501#2	16	4	S	BTX	50n	25n$	6.0m%	0.0	5.0	.85	2.0	15m	.45		0	7	A3	ML56
20	N8225E	16	4	S	BTX	50n	60n	552mØ	0.0	5.0	.80	2.0	16m	.40		0	7	A73	ML61c
21	N8225R	16	4	S	BTX	50n	60n	552mØ	0.0	5.0	.80	2.0	16m	.40		0	7	A73	FL18
22	S54S189W	16	4	S	BTX	50n	30n$			7.0	0.80	2.0§	16m	0.5		5	C	54S189	FL16Ø
23	S8225B	16	4	S	BTX	50n	60n	552mØ	0.0	5.0	.80	2.0	16m	.40		5	C	A73	DL16az
24	S8225E	16	4	S	BTX	50n	60n	552mØ	0.0	5.0	.80	2.0	16m	.40		5	C	A73	ML61c
25	S8225R	16	4	S	BTX	50n	60n	552mØ	0.0	5.0	.80	2.0	16m	.40		5	C	A73	FL18
26	93403-1-4L	16	4	S	BTX	60n	45n$	575m	0.0	5.0	.80	2.1	16m	.45		5	C	PN16bb	FL14
27	93403-1-7B	16	4	S	BTX	60n	45n$	575m	0.0	5.0	.80	2.1	16m	.45		5	C	PN16bb	DL16au
28	93403-9-4L	16	4	S	BTX	60n	45n$	550m	0.0	5.0	.85	2.0	16m	.45		0	7	PN16bb	DL40a
29	DM7489J	16	4	S	BTX	60n	40n$	600m	0.0	5.0	.80	2.0Δ	12m	.40		0	7	74-89	DL16cr
30	DM7489N	16	4	S	BTX	60n	40n$	600m	0.0	5.0	.80	2.0Δ	12m	.40		0	7	74-89	DL16bh
31	FLQ101-7489	16	4	S	BTX	60n	40n	525m	0.0	5.0	.80	2.0	16m	.45		0	7	A305	DLØ
32	FLQ105-8489	16	4	S	BTX	60n	40n	525m	0.0	5.0	.80	2.0	16m	.45		2	8	A305	DLØ
33	HRAM0064-2	16	4	S	BTX	60n	95n	525m♦	0.0	5.0	.80	2.0	16m	.45		5	C	A3	DL16au
34	HRAM0064-5	16	4	S	BTX	60n	95n	525m♦	0.0	5.0	.80	2.0	16m	.45		0	7	A3	DL16au
35	IM5501CDE	16	4	S	BTX	60n	35n$	6.0m%	0.0	5.0	.85	2.0	16m	.45		0	7	A31	DL16b
36	IM5501CFE	16	4	S	BTX	60n	35n$	6.0m%	0.0	5.0	.85	2.0	16m	.45		0	7	A31	FL27
37	IM5501CPE	16	4	S	BTX	60n	35n$	6.0m%	0.0	5.0	.85	2.0	16m	.45		0	7	A31	DL16ao
38	IM5501MDE	16	4	S	BTX	60n	35n$	6.0m%	0.0	5.0	.80	2.0	16m	.45		5	C	A31	DL16b
39	IM5501MFE	16	4	S	BTX	60n	35n$	6.0m%	0.0	5.0	.80	2.0	16m	.45		5	C	A31	FL27
40	IM5501MPE	16	4	S	BTX	60n	35n$	6.0m%	0.0	5.0	.80	2.0	16m	.45		5	C	A31	DL16ao
41	MCM4064AL	16	4	S	BTX	60n	50n	550m	0.0	5.0	.80	2.0	15m	.45		0	8	A70	ML78
42	MM5500#1	16	4	S	BTX	60n	25n$	6.0m%	0.0	5.0	.80	2.0	10m	.40		5	C	A3	ML55
43	MM5500#2	16	4	S	BTX	60n	25n$	6.0m%	0.0	5.0	.80	2.0	10m	.40		5	C	A3	ML56
44	MM6500#1	16	4	S	BTX	60n	25n$	6.0m%	0.0	5.0	.85	2.0	15m	.45		0	7	A3	ML55
45	MM6500#2	16	4	S	BTX	60n	25n$	6.0m%	0.0	5.0	.85	2.0	15m	.45		0	7	A3	ML56
46	RR5100#1	16	4	S	BTX	60n	100n	450m♦Ø	0.0	5.0	.85Ø	2.0	10mØ	.45		5	C	A40	ML26
47	RR5100#2	16	4	S	BTX	60n	100n	450m♦Ø	0.0	5.0	.85Ø	2.0	10mØ	.45		5	C	A40	FL14b
48	RR5100D	16	4	S	BTX	60n	100n	450m	0.0	5.0	.85	2.0	10m	.45		5	C	A122	ML4f
49	RR5100K	16	4	S	BTX	60n	100n	450m	0.0	5.0	.85	2.0	10m	.45		5	C	A122	FL14b
50	RR5101#1	16	4	S	BTX	60n	45n	375m	0.0	5.0	.80	2.0	16m	.45		5	C		ML26
51	RR5101#2	16	4	S	BTX	60n	45n	375m	0.0	5.0	.80	2.0	16m	.45		5	C		FL14b
52	RR5102#1	16	4	S	BTX	60n	100n	450m♦Ø	0.0	5.0	.85Ø	2.0	10mØ	.45		0	7	A40	ML26
53	RR5102#2	16	4	S	BTX	60n	100n	450m♦Ø	0.0	5.0	.85Ø	2.0	10mØ	.45		0	7	A40	FL14b
54	RR5102D	16	4	S	BTX	60n	100n	450m	0.0	5.0	.85	2.0	10m	.45		6	F	A122	ML4f
55	RR5102K	16	4	S	BTX	60n	100n	450m	0.0	5.0	.85	2.0	10m	.45		6	F	A122	FL14b
56	RR5103#1	16	4	S	BTX	60n	45n	375m	0.0	5.0	.80	2.0	16m	.45		0	7		ML26
57	RR5103#2	16	4	S	BTX	60n	45n	375m	0.0	5.0	.80	2.0	16m	.45		0	7		FL14b
58	RR6100	16	4	S	BTX	60n	35n$	450m♦	0.0	5.0	.85	2.0	10m	.45		0	7	A40	DL16an
59	uPB2089D	16	4	S	BTX	60n	40n$	525m	0.0	5.0	.80	2.0	16m	.45		0	6	A215	ML127n
60	DM76L99N	16	4	S	BTX	80n	30n$	95m	0.0	5.0	.70	2.0§	2.0m	.30		5	C	74-89	DL16bh
61	DM86L99J	16	4	S	BTX	80n	30n$	95m	0.0	5.0	.70	2.0§	3.6m	.40		0	7	74-89	DL16cr
62	DM86L99W	16	4	S	BTX	80n	30n$	95m	0.0	5.0	.70	2.0§	3.6m	.40		0	7	74-89	FL39
63	DM5489J	16	4	S	BTX	80n	50n$	600m	0.0	5.0	.80	2.0Δ	12m	.40		5	C	74-89	DL16cr
64	L6560D	16	4	S	BTX	80n	80n$	125m†	0.0	5.0	.80	2.0	4.8m	.50		0	7	74S189	DL16v
65	L6561D	16	4	S	BTX	80n	80n$	125m†	0.0	5.0	.80	2.0§	4.8m	.50		0	7	74S189	DL16v
66	L5560D	16	4	S	BTX	100n	100n$	125m†	0.0	5.0	.80	2.0	4.8m	.50		5	C	74S189	DL16v
67	L5560N	16	4	S	BTX	100n	100n$	125m†	0.0	5.0	.80	2.0	4.8m	.50		5	C	74S189	DL16da
68	L5561D	16	4	S	BTX	100n	100n$	125m†	0.0	5.0	.80	2.0§	4.8m	.50		5	C	74S189	DL16v
69	L5561N	16	4	S	BTX	100n	100n$	125m†	0.0	5.0	.80	2.0§	4.8m	.50		5	C	74S189	DL16da
70	CM2106	16	4	S	BTX	150n	200n	100m	0.0	5.0	.70	2.1	4.8m	.30		0	7	A3	DL16ek
71	CM2106M	16	4	S	BTX	150n	200n	100m	0.0	5.0	.70	2.1	4.8m	.30		5	C	A3	DL16ek
72	5584	16	4	S	BXX	60n	45n	1.0 Ø	0.0	5.0	.85	2.0	100uΔ	5.5		0	7		
73	pMS16x4C	16	4	S	HXX	400n	100n		15	0.0	-2.0	-9.0	1.0m	2.0		0	7	A19	DL14b
74	SCM5589C	16	4	S	MCA	300n	500n		0.0	10	3.0	7.0	1.3m	.50		5	C	74S189	DL16cx
75	SCM5589E	16	4	S	MCA	300n	500n		0.0	10	3.0	7.0	1.3m	.50		4	8	74S189	DL16cy
76	SCM5589H	16	4	S	MCA	300n	500n		0.0	10	3.0	7.0	1.3m	.50		5	C	74S189	CHØ
77	AO1	16	4	S	MCS	90n	95n	70mØ	5.0	5.0	.80Ø	3.2	100nΔØ			0	7	A86	DL16a
78	A01	16	4	S	MCS	100n	100n	64m	5.0	5.0	.80	3.2	1.6m	.40		0	7	A86	DL16a
79	A01FT	16	4	S	MCS	100n	100n	64m	5.0	5.0	.80	3.2	1.6m	.40		5	C	A86	DL16a
80	AO1FT	16	4	S	MCS	140n	150n	64m	5.0	5.0	.80	3.2	2.0m	.80		5	C	A86	DL16a
81	HD1-54C89	16	4	S	MCX	130n	100n$	100n†	0.0	10	2.0	8.0§	8.0m	10		5	C	A182	ML127h
82	HD1-74C89	16	4	S	MCX	130n	100n$	100n†	0.0	10	2.0	8.0§	8.0m	10		4	8	A182	ML127h
83	HD9-54C89	16	4	S	MCX	130n	100n$	100n†	0.0	10	2.0	8.0§	8.0m	10		5	C	A182	FL27
84	HD9-74C89	16	4	S	MCX	130n	100n$	100n†	0.0	10	2.0	8.0§	8.0m	10		4	8	A182	FL27
85	CRC4001-1-3	16	4	S	MPX	400n	100n$	4.0m%†	27	0.0	-2.0Ø	-9.0	10uΔ	15		0	7	A19	ML6
86	CRC4001-2-3	16	4	S	MPX	400n	100n$	4.0m%†	27	0.0	-2.0Ø	-9.0	10uΔ	15		0	7	A19	FL5
87	MCM1170L	16	4	S	MPX	500n	250n$	420m♦Ø	30	0.0	-2.0	-11				0	7	A8	ML6
88	TL1170L	16	4	S	MPX	550n	500n		15	0.0	0.0	-11	1.0m			0	7	A8	ML6
89	5588#1	16	16	S	BXX	60n	45n	2.0 Ø	0.0	5.0	.85	2.0	100uΔ	5.5		0	7		
90	RA6-4803D	32	1	S	MXX	1.5u	1.5u	90m†Ø	12	5.0	.80♦	3.5	1.6m	.40		5	C	A20	DL14a
91	RA6-4803F	32	1	S	MXX	1.5u	1.5u	90m†Ø	12	5.0	.80♦	3.5	1.6m	.40		5	C	A20	TO87
92	N82S21B	32	2	S	BTD	50n	15n$	480mØ	0.0	5.2	.85	2.0	32m	.45		0	7	A92	DL16az
93	RC82S21F	32	2	S	BTD	50n	15n$	835mØ	0.0	5.5						5	C	A92	DL16cv
94	5587#1	32	2	S	BTX	28n	30n	1.6 †	0.0	5.0	.80	2.0				0	7		
95	DM86S21J	32	2	S	BTX	50n	20n$	650m	0.0	5.0	.85	2.0Δ	40m	.45		0	7	A92	DL16cr
96	DM86S21N	32	2	S	BTX	50n	20n$	650m	0.0	5.0	.85	2.0Δ	40m	.45		0	7	A92	DL16bh
97	CD40024D	32	8		MCX	220n	350n	7.5m	0.0	12	.80	3.6	3.6m	.50		5	C	PN18f	DLØ
98	85100111	32	8	S	BEX	15n	10n	9.4 Ø	5.2	0.0	-1.3	-1.0	25mØ			0	7		PL1
99	5588#2	32	8	S	BXX	60n	45n	2.0 Ø	0.0	5.0	.85	2.0	100uΔ	5.5		0	7		
100	SCP1824	32	8	S	MCG	200n		5.0m†	0.0	10	.01%	9.99				5	C	A500	DLØ
101	SCP1824L	32	8	S	MCG	400n		2.5m†	0.0	5.0	.01%	4.99				5	C	A500	DLØ
102	SCP1824C	32	8	S	MCX	200n	200n	6.0m†	0.0	10	3.0	7.0	3.6m	10		5	C	PN18d	DLØ
103	SCP1824E	32	8	S	MCX	200n	200n	6.0m†	0.0	10	3.0	7.0	3.6m	10		4	8	PN18d	DLØ
104	SCP1824LC	32	8	S	MCX	400n	400n	1.0m†	0.0	5.0	1.5	3.5	2.2m	5.0		5	C	PN18d	DLØ
105	SCP1824LE	32	8	S	MCX	400n	400n	1.0m†	0.0	5.0	1.5	3.5	2.2m	5.0		4	8	PN18d	DLØ
106	85100211	32	9	S	BEX	15n	10n	10 Ø	5.2	0.0	-1.3	-1.0	25mØ			0	7	A11	PL1
107	MCM10548F	64	1	S	BEX			520m	5.2	0.0	-1.4	-1.1	50mØ			5	C	A422	FL34
108	MCM10548L	64	1	S	BEX			520m	5.2	0.0	-1.4	-1.1	50mØ			5	C	A422	DL16bm
109	91100211	64	1	S	BEX	7.0n	7.0n$	5.0m%	6.5	0.0	-1.6†	-.40	25mØ			0	7	A13	TO116
110	IM0641	64	1	S	BEX	7.0n	7.0n$	5.0m%	6.5	0.0	-1.6†	-.40	25mØ			0	7	A13	TO116

SYMBOLS AND CODES EXPLAINED IN INTERPRETER

2. READ-WRITE MEMORIES (RAMS)

IN ORDER OF (1)No.WORDS(2)No.BITS/WORD (3)MODE(4)STRUCT.(5)MAX ACC.TIME(6)TYPE No.

LINE No.	6 TYPE NUMBER	ORGANIZATION 1 NO. OF WORDS	2 BITS PER WORD	3 MODE	4 STRUCTURE CODE	5 MAX. ACCESS TIME (S)	MAX. WRITE CYCLE TIME (S)	MAX. POWER DISS. (W)	POWER SUPPLY SPAN NEG. (V)	POS. (V)	INPUT LOGIC LEVELS MAX. '0' (V)	MIN. '1' (V)	MIN.OUTPUT SINK CURRENT (A)	@ OUT (V)	MIN. CLOCK FREQ. (Hz)	OPER TEMP RNGE CODE -	+	DRAWINGS FUNCTIONAL EQUIVALENT NUMBER	OUTLINE
1	MCM10142AL	64	1	S	BEX	10n	10n$	420m†	5.2	0.0	-1.6%	-.96	40mØ			3	8	A126	DL16m
2	MCM10148F	64	1	S	BEX	10n	8.0n$	420m	5.2	0.0	-1.7	-0.9	50m#$			0	7	A422	FL34
3	SN10142J	64	1	S	BEX	10n	10n$	520m	5.2	0.0	-1.6	-.98				0	8	A177	DL16fh
4	MCM10140L	64	1	S	BEX	12n	18n	520mØ	5.2	0.0	-1.6%	-.89				3	8	A126	DL16eq
5	MCM10142L	64	1	S	BEX	12n	18n	520mØ	5.2	0.0	-1.6%	-.89				3	8	A126	DL16eq
6	uPB10142D	64	1	S	BEX	12n	6.0n$	960m	5.2	0.0	-1.6	-.96				3	8	A439	DL16es
7	GXB10151	64	1	S	BEX	15n			5.2	0.0						3	8		
8	MCM10140AL	64	1	S	BEX	15n	10n$	420m†	5.2	0.0	-1.6%	-.96	40mØ			3	8	A126	DL16m
9	MCM10148AL	64	1	S	BEX	15n	10n$	420m†	5.2	0.0	-1.6%	-.96	40mØ			3	8	A126	DL16m
10	SN10140J	64	1	S	BEX	15n	10n$	520m	5.2	0.0	-1.6	-.98				0	8	A177	DL16fh
11	SN10148J	64	1	S	BEX	15n	10n$	520m	5.2	0.0	-1.6	-.98				0	8		DL16fh
12	uPB10148D	64	1	S	BEX	15n	6.0n$	960m	5.2	0.0	-1.6	7.0				3	8	A439	DL16es
13	MCM14505L	64	1	S	MCX	200n	300n	100u♦	0.0	10	3.5	1.5	10nΔ			5	C	A66	DL14q
14	MCM14505AL	64	1	S	MCX	300n	415n	300u♦Ø	0.0	15	.05%	14.9	1.7m	1.5		5	C	A66	DL14q
15	MCM14505BAL	64	1	S	MCX	300n	415n	300u♦	0.0	15	.05%	14.9	1.7m	1.5		5	C	45-05	DL14ah
16	MCM14505BCL	64	1	S	MCX	300n	415n	3.0m♦	0.0	15	.05%	14.9	750u	1.5		4	8	A66	DL14ah
17	MCM14505BCP	64	1	S	MCX	300n	415n	3.0m♦	0.0	15	.05%	14.9	750u	1.5		4	8	A66	DL14ao
18	MCM14505CL	64	1	S	MCX	300n	415n	3.0m♦Ø	0.0	15	.05%	14.9	750u	1.5		4	8	45-05	DL14q
19	MCM14505CP	64	1	S	MCX	300n	415n	3.0m♦Ø	0.0	15	.05%	14.9	750u	1.5		4	8	45-05	DL14aq
20	3530-4-6J	64	1	S	MPX	1.0u	3.5u$	225m†	27	0.0	-2.0	-9.0				5	8	A28	DL16en
21	FDQ106	64	2	D	MPX	1.0u	500n$	3.0u♦	28	0.0	-10%	-10			10k	5	8	A39	ML4a
22	CRC4002-1-2	64	2	S	MPX	100n		150mØ	0.0	12	10*	2.0				2	8		ML7
23	CRC4002-2-2	64	2	S	MPX	100n		150mØ	0.0	12	10*	2.0				2	8		FL3
24	UA2564D	64	4	D	MPA	900n		160m	5.0	5.0	.80	2.6	3.5m$	2.4	50kΔ	5	C	A43	ML26
25	UA2564F	64	4	D	MPA	900n		160m	5.0	5.0	.80	2.6	3.5m$	2.4	50kΔ	5	C	A43	FL7a
26	UA2764D	64	4	D	MPA	900n		160m	5.0	5.0	.80	2.6	3.5m$	2.4	50kΔ	5	C	A44	ML26
27	UA2764F	64	4	D	MPA	900n		160m	5.0	5.0	.80	2.6	3.5m$	2.4	50kΔ	5	C	A44	FL7a
28	UA3564D	64	4	D	MPA	900n		160m	5.0	5.0	.80	2.6	3.5m$	2.4	50kΔ	2	7	A43	ML26
29	UA3564F	64	4	D	MPA	900n		160m	5.0	5.0	.80	2.6	3.5m$	2.4	50kΔ	2	7	A43	FL7a
30	UA3764D	64	4	D	MPA	900n		160m	5.0	5.0	.80	2.6	3.5m$	2.4	50kΔ	2	7	A44	ML26
31	UA3764F	64	4	D	MPA	900n		160m	5.0	5.0	.80	2.6	3.5m$	2.4	50kΔ	2	7	A44	FL7a
32	UC6550D	64	4	D	MPA	900n		160m	5.0	5.0	.60	2.7	3.5m$	2.4	50kΔ	5	C	A41a	ML24
33	UC6550F	64	4	D	MPA	900n		160m	5.0	5.0	.60	2.7	3.5m$	2.4	50kΔ	5	C	A41	FL7a
34	UC7550D	64	4	D	MPA	900n		160m	5.0	5.0	.60	2.7	3.5m$	2.4	50kΔ	2	7	A41a	ML24
35	UC7550F	64	4	D	MPA	900n		160m	5.0	5.0	.60	2.7	3.5m$	2.4	50kΔ	2	7	A41	FL7a
36	5588#3	64	4	S	BXX	60n	45n	2.0 Ø	0.0	5.0	.85	2.0	100uΔ	5.5		0	7		
37	SCM5555C	64	4	S	MCA	100n	145n	500u♦	0.0	10	3.0	7.0	500u%†	.50		5	C	A90	
38	SCM5555D	64	4	S	MCA	100n	145n	500u♦	0.0	10	3.0	7.0	500u%†	.50		5	C	A90	DL24ca
39	SCM5555E	64	4	S	MCA	100n	145n	500u♦	0.0	10	3.0	7.0	500u%†	.50		4	8	A90	DL24ai
40	SCM5555H	64	4	S	MCA	100n	145n	500u♦	0.0	10	3.0	7.0	500u%†	.50		5	C	A90	CHØ
41	SCL5555D	64	4	S	MCX	100n	145n	500u♦	0.0	10	.10%	9.9	500u%†	.50		5	C	A90	DL24ca
42	SCL5555E	64	4	S	MCX	100n	145n	500u♦	0.0	10	.10%	9.9	500u%†	.50		4	8	A90	DL24ai
43	SCL5555H	64	4	S	MCX	100n	145n	500u♦	0.0	10	.10%	9.9	500u%†	.50		5	C	A90	CHØ
44	IXD2210	64	4	S	MNX	300n	300n		0.0	5.0	0.8	2.4				3	8	PN18cr	DL18cq
45	MXD2210	64	4	S	MNX	300n	300n		0.0	5.0	0.8	2.4				5	C	A609	DL18cq
46	MXD2210-1	64	4	S	MNX	300n	300n		0.0	5.0	0.8	2.4				5	9	A609	DL18cq
47	X2201A30#ai	64	4	S	MNX	300n	300n		0.0	5.0	.80	2.0§	4.2m	.40		0	7	PN18cp	DL18cq
48	X2210-30#ai	64	4	S	MNX	300n	300n		0.0	5.0	.80	2.0§	4.2m	.40		0	7	PN18cq	DL18Ø
49	UA2664D	64	4	S	MPA	1.0u	400n$	480mØ	5.0	5.0	.80	2.4	3.2m$	2.8		5	C	A43	ML26
50	UA2664F	64	4	S	MPA	1.0u	400n$	480mØ	5.0	5.0	.80	2.4	3.2m$	2.8		5	C	A43	FL7a
51	UA2864D	64	4	S	MPA	1.0u	400n$	480mØ	5.0	5.0	.80	2.4	3.2m$	2.8		5	C	A44	ML26
52	UA2864F	64	4	S	MPA	1.0u	400n$	480mØ	5.0	5.0	.80	2.4	3.2m$	2.8		5	C	A44	FL7a
53	UA3664D	64	4	S	MPA	1.0u	400n$	480mØ	5.0	5.0	.80	2.4	3.2m$	2.8		2	7	A43	ML26
54	UA3664F	64	4	S	MPA	1.0u	400n$	480mØ	5.0	5.0	.80	2.4	3.2m$	2.8		2	7	A43	FL7a
55	UA3864D	64	4	S	MPA	1.0u	400n$	480mØ	5.0	5.0	.80	2.4	3.2m$	2.8		2	7	A44	ML26
56	UA3864F	64	4	S	MPA	1.0u	400n$	480mØ	5.0	5.0	.80	2.4	3.2m$	2.8		2	7	A44	FL7a
57	CM1808#1	64	4	S	MPG	100n	250n	350m	0.0	5.0	.80	3.0				0	8	A80	DLØ
58	CM1808#2	64	4	S	MPG	100n	250n	350m	0.0	5.0	.80	3.0				5	C	A80	DLØ
59	CM1805	64	4	S	MPG	650n	250n$	350m	0.0	5.0	.50†	3.0	3.0m	4.5		0	7	A79	ML84a
60	MK4002P	64	4	S	MPI	1.0u	650n	200m†	12	5.0	.80	-1.0§	1.6m	.50		0	7	A34	ML21
61	CRC4003-1-2	64	4	S	MPX	100n		300mØ	0.0	12	10*	2.0				2	8		ML13
62	CRC4003-2-2	64	4	S	MPX	100n		300mØ	0.0	12	10*	2.0				2	8		FL4
63	UC6550#1	64	4	S	MXX	900n		710m	15	5.0	.60	2.7				5	C	A41	FL7
64	UC6550#2	64	4	S	MXX	900n		710m	15	5.0	.60	2.7				5	C	A41a	ML24
65	UC7550#1	64	4	S	MXX	900n		710m	15	5.0	.60	2.7				2	7	A41	FL7
66	UC7550#2	64	4	S	MXX	900n		710m	15	5.0	.60	2.7				2	7	A41a	ML24
67	08C25	64	8	S	BEX	40n	80n	13	5.2	0.0	-1.5	-.90	22m#%	1.8		1	5		PL5a
68	15C22	64	8	S	BTX	125n	150n	9.0	0.0	5.0	.80†	2.0	15m#	5.0		1	5		PL5a
69	TMS4036-2JL	64	8	S	MNG	450n	450n	450m	0.0	5.0	.80	2.2§	1.9m	.40		0	7	A237	DLØ
70	TMS4036-2NL	64	8	S	MNG	450n	450n	450m	0.0	5.0	.80	2.2§	1.9m	.40		0	7	A237	DLØ
71	TMS4036-1JL	64	8	S	MNG	650n	650n	450m	0.0	5.0	.80	2.2§	1.9m	.40		0	7	A237	DLØ
72	TMS4036-1NL	64	8	S	MNG	650n	650n	450m	0.0	5.0	.80	2.2§	1.9m	.40		0	7	A237	DLØ
73	TMS4036JL	64	8	S	MNG	1.0u	1.0u	450m	0.0	5.0	.80	2.2§	1.9m	.40		0	7	A237	DLØ
74	TMS4036NL	64	8	S	MNG	1.0u	1.0u	450m	0.0	5.0	.80	2.2§	1.9m	.40		0	7	A237	DLØ
75	RC82S09I	64	9		BTD	80n	75n	1.3m%†	0.0	5.0	.80	2.2Δ	6.4m	.50		5	C	A396	DL28j
76	08C24	64	9	S	BEX	40n	80n	14	5.2	0.0	-1.5	-.90	22m#%	1.8		1	5		PL5a
77	S82S09N	64	9	S	BTD	80n	50n$	1.0	0.0	5.0	.80	2.2Δ	6.4m	.50		5	C	A396	DL28u
78	MB7063	64	9	S	BTX	45n	35n$	1.3m%	0.0	5.0	.80	2.1Δ	12m	.50		0	7	A332	DL28h
79	15C17	64	9	S	BTX	125n	150n	9.5	0.0	5.0	.80†	2.0	15m#	5.0		1	5		PL5a
80	TMS4024JC	64	9	S	MPT	1.2u	300n$	182m†	12	5.0	.30	-1.5§	1.6m	.40		2	8	A137	ML211
81	TMS4024NC	64	9	S	MPT	1.2u	300n$	182m†	12	5.0	.30	-1.5§	1.6m	.40		2	8	A137	ML83b
82	HM6511-9	64	12	S	MCG			20m	0.0	5.0	.80	3.0				4	8	A454	
83	HM6511C9	64	12	S	MCG			20m	0.0	5.0	.80	3.0				4	8	A454	
84	HM6512-9	64	12	S	MCG			20m	0.0	5.0	.80	3.0				4	8	A296	
85	HM6512C9	64	12	S	MCG			20m	0.0	5.0	.80	3.0				4	8	A296	
86	IM6512A-IFN	64	12	S	MCG	150n	245n	5.0m	0.0	10	2.0	7.0§	1.0uΔ			4	8	A296	FL46
87	HM9-6512-9	64	12	S	MCG	250n	450n	500u♦	0.0	5.0	.80	3.0§	2.0m	.45		4	8	A296	FL52
88	HM9-6512C9	64	12	S	MCG	400n	650n	4.0m♦	0.0	5.0	.80	3.5§	1.6m	.45		4	8	A296	FL52
89	IM6512IFN	64	12	S	MCG	460n	760n	500u	0.0	5.0	.80	3.0§	2.0m	.45		4	8	A296	FL46
90	IM6512CDN	64	12	S	MCG	600n	995n	4.0m	0.0	5.0	.80	3.5§	1.6m	.45		0	7	A296	DL18ab
91	IM6512CFN	64	12	S	MCG	600n	995n	4.0m	0.0	5.0	.80	3.5§	1.6m	.45		0	7	A296	FL46
92	08C19	64	16	S	BEX	40n	80n	22	5.2	0.0	-1.5	-.90	22m#%	1.8		1	5		PL5a
93	15C09	64	16	S	BTX	125n	150n	16	0.0	5.0	.80†	2.0	15m#	5.0		1	5		PL5a
94	08C13	64	18	S	BEX	40n	80n	23	5.2	0.0	-1.5	-.90	22m#%	1.8		1	5		PL5a
95	15C19	64	18	S	BTX	125n	150n	17	0.0	5.0	.80†	2.0	15m#	5.0		1	5		PL5a
96	MN1114	64	64	S	MXX	450n			0.0	5.0	.80	2.4				3	7	A448	DL20f
97	IM4116-2CDE	128		D	MNG	150n	375 Δ	1.0 Ø	5	12	.80	2.4§	10uΔ			0	7	A351	DL16aj
98	IM4116-2CJE	128		D	MNG	150n	375 Δ	1.0 Ø	5	12	.80	2.4§	10uΔ			0	7	A351	DL16ej
99	IM4116-2CPE	128		D	MNG	150n	375 Δ	1.0 Ø	5	12	.80	2.4§	10uΔ			0	7	A351	DL16bn
100	IM4116-3CDE	128		D	MNG	200n	375nΔ	1.0 Ø	5	12	.80	2.4§	10uΔ			0	7	A351	DL16aj
101	IM4116-3CJE	128		D	MNG	200n	375nΔ	1.0 Ø	5	12	.80	2.4§	10uΔ			0	7	A351	DL16ej
102	IM4116-3CPE	128		D	MNG	200n	375nΔ	1.0 Ø	5	12	.80	2.4§	10uΔ			0	7	A351	DL16bn
103	IM4116-4CDE	128		D	MNG	250n	515 Δ	1.0 Ø	5	12	.80	2.4§	10uΔ			0	7	A351	DL16aj
104	IM4116-4CJE	128		D	MNG	250n	515 Δ	1.0 Ø	5	12	.80	2.4§	10uΔ			0	7	A351	DL16ej
105	IM4116-4CPE	128		D	MNG	250n	515 Δ	1.0 Ø	5	12	.80	2.4§	10uΔ			0	7	A351	DL16bn
106	MCM10147AL	128	1		BEX	12n	8.0n$	415m†	5.2	0.0	-1.6%	-.96				3	8	A136	DL16m
107	MCM10547F	128	1	S	BEX			520m	5.2	0.0	-1.4	-1.1	50mØ			5	C	A421	FL34
108	MCM10547L	128	1	S	BEX			520m	5.2	0.0	-1.4	-1.1	50mØ			5	C	A421	DL16bm
109	MCM10147F	128	1	S	BEX	10n	8.0n$	420m	5.2	0.0	-1.7	-0.9	50m#$			0	7	A421	FL34
110	GXB10147A	128	1	S	BEX	12n	8.0n	520m♦	5.2	0.0	-1.4	-1.1				0	8	A136	DL16t

SYMBOLS AND CODES EXPLAINED IN INTERPRETER

2. READ-WRITE MEMORIES (RAMS)

IN ORDER OF (1)No.WORDS(2)No.BITS/WORD (3)MODE(4)STRUCT.(5)MAX ACC.TIME(6)TYPE No.

LINE No.	6 TYPE NUMBER	ORGANIZATION 1 NO. OF WORDS	2 BITS PER WORD	3 MODE	4 STRUC-TURE CODE	5 MAX. ACCESS TIME (S)	MAX. WRITE CYCLE TIME (S)	MAX. POWER DISS. (W)	POWER SUPPLY SPAN NEG. (V)	POS. (V)	INPUT LOGIC LEVELS MAX. '0' (V)	MIN. '1' (V)	MIN.OUTPUT SINK CURRENT (A)	@ OUT (V)	MIN. CLOCK FREQ. (Hz)	OPER TEMP RNGE CODE -	+	DRAWINGS FUNCTIONAL EQUIVALENT NUMBER	OUTLINE
1	MB7047	128	1	S	BEX	14n	9.0n$	550m	5.2	0.0	-1.8*	-.84				3	8	A489	DL16g
2	91100311	128	1	S	BEX	15n	8.0n$	3.2m%	5.5	0.0	-1.4	-1.1	50mØ			0	7	A15	DLØ
3	IM1003	128	1	S	BEX	15n	8.0n$	3.2m%	5.5	0.0	-1.4	-1.1	50mØ			0	7	A15	DLØ
4	SN10147J	128	1	S	BEX	15n	8.0n$	520m	5.2	0.0	-1.6	-.98				0	8	A180	DL16fh
5	91150311	128	1	S	BTX	25n	8.0n	3.2m%	5.5	0.0	.40†	2.0	50m#			0	7	A17	
6	IM1503	128	1	S	BTX	25n	8.0n	3.2m%	5.5	0.0	.40†	2.0	50mØ			0	7	A17	
7	MWS5080D	128	8		MCS	200n		8.0m	0.0	10	.80	7.0	3.5m	.50		2	8	PN24d	DLØ
8	85100311	128	8	S	BEX	17n	15n	12 Ø	6.0	0.0	-1.6	-1.0	20m			0	7		PL1
9	IM1288E	128	8	S	BEX	17n	15n	12 Ø	6.0	0.0	-1.6	-1.0	11m	-.95		0	7		PL1
10	08C44	128	8	S	BEX	40n	80n	21	5.2	0.0	-1.5	-.90	22m#%	1.8		1	5		PL5a
11	15C21	128	8	S	BTX	125n	150n	11	0.0	5.0	.80†	2.0	15m#	5.0		1	5		PL5a
12	RAM18A#1	128	8	S	BTX	180n	200n	2.2 †	5.0	5.0	.80	2.0	20m	.40		1	8	A58	PL3
13	RAM218A#1	128	8	S	BTX	180n	155n	2.2 †	5.0	5.0	.80	2.0	30mØ			1	8	A58a	PL3
14	MCM6810ACL1	128	8	S	MNG			400m	0.0	5.0	0.8	2.0				4	8	A384	DL24dk
15	MCM6810ACL	128	8	S	MNG			400m	0.0	5.0	0.8	2.0				4	8	A384	DL24dk
16	MCM6810AL1	128	8	S	MNG			400m	0.0	5.0	0.8	2.0				0	6	A384	DL24dk
17	MCM6810AL	128	8	S	MNG			350m	0.0	5.0	0.8	2.0				0	6	A384	DL24dk
18	MCM6810AP1	128	8	S	MNG			400m	0.0	5.0	0.8	2.0				0	6	A384	DL24cb
19	MCM6810AP	128	8	S	MNG			350m	0.0	5.0	0.8	2.0				0	6	A384	DL24cb
20	MCM6810CJCS	128	8	S	MNG			420m	0.0	5.0	0.8	2.0§				5	C	A384	DLØ
21	MCM68B10S	128	8	S	MNG	190n	10u		0.0	5.0	.80	2.0§	1.6m	.40		0	7	A384	DL24k
22	MCM68B10L	128	8	S	MNG	250n	250n	500m	0.0	5.0	.80	2.0§	1.6m	.40		0	7	A384	DL24do
23	MCM68B10P	128	8	S	MNG	250n	250n	500m	0.0	5.0	.80	2.0§	1.6m	.40		0	7	A384	DL24br
24	S6810A-1	128	8	S	MNG	350n	350n	400m	0.0	5.0	.80	2.0	1.6m	.40		0	7	A223	DL24bm
25	EF68A10CP	128	8	S	MNG	360n	360n		0.0	5.0	0.8	2.0§	1.6m	0.4	1.5M	4	8	A384	DL24ax
26	EF6810CMB	128	8	S	MNG	450n	450n		0.0	5.0	0.8	2.0§	1.6m	0.4	1.0M	5	C	A384	DL24ax
27	EF6810CP	128	8	S	MNG	450n	450n		0.0	5.0	0.8	2.0§	1.6m	0.4	1.0M	4	8	A384	DL24ax
28	MCM6810BJCS	128	8	S	MNG	450n	450n	500m	0.0	5.0	.80	2.0§	1.6m	.40		5	C	A384	DLØ
29	S6810A	128	8	S	MNG	450n	450n	350m	0.0	5.0	.80	2.0	1.6m	.40		0	7	A223	DL24bm
30	85100411	128	9	S	BEX	17n	15n	13 Ø	6.0	0.0	-1.4	-1.0	20m			0	7	A16	PL1
31	IM1289E	128	9	S	BEX	17n	15n	13 Ø	6.0	0.0	-1.4	-1.0	11m	-.95		0	7	A16	PL1
32	08C42	128	9	S	BEX	40n	80n	22	5.2	0.0	-1.5	-.90	22m#%	1.8		1	5		PL5a
33	15C16	128	9	S	BTX	125n	150n	12	0.0	5.0	.80†	2.0	15m#	5.0		1	5		PL5a
34	MN1101	128	9	S	MCG	500n	500n	50m	0.0	5.0	.60	2.4				0	7	A437	ML162a
35	08C53	128	16	S	BEX	40n	80n	32	5.2	0.0	-1.5	-.90	22m#%	1.8		1	5		PL5
36	15C24	128	16	S	BTX	125n	150n	21	0.0	5.0	.80†	2.0	15m#	5.0		1	5		PL5a
37	08C41	128	18	S	BEX	40n	80n	35	5.2	0.0	-1.5	-.90	22m#%	1.8		1	5		PL5
38	15C18	128	18	S	BTX	125n	150n	22	0.0	5.0	.80†	2.0	15m#	5.0		1	5		PL5a
39	RC54S201F	256	1		BTD	70n	60n	650m	0.0	5.0	.80	2.0§	16m	.50		5	C	74S201	DL16cv
40	RC54S301F	256	1		BTD	70n	60n	650m	0.0	5.0	.80	2.0Δ	16m	.50		5	C	74S301	DL16cv
41	RR5330-PR	256	1		BTX	40n		350m	0.0	5.0			16m	.45		5	C		
42	RR5332-PR	256	1		BTX	40n		350m	0.0	5.0			16m	.45		0	7		
43	RR5340-PR	256	1		BTX	40n		350m	0.0	5.0			16m	.45		5	C		
44	RR5342-PR	256	1		BTX	40n		350m	0.0	5.0			16m	.45		0	7		
45	GXB95410	256	1	S	BEX				5.2	0.0	-1.7†	-.88				0	7	PN16cb	DLØ
46	MCM10552F	256	1	S	BEX			676m	5.2	0.0	-1.4	-1.1	50mØ			5	C	A165	FL34
47	MCM10552L	256	1	S	BEX			676m	5.2	0.0	-1.4	-1.1	50mØ			5	C	A165	DL16bm
48	MB7041	256	1	S	BEX	9.0n	16n	520m†	5.2	0.0	-1.8*	.84				0	7	A225	ML149
49	RC10144M	256	1	S	BEX	10n	20n$	250m	5.2	0.0	-1.6%	-.96	30m#			0	7	A150a	ML141
50	RC10144MP	256	1	S	BEX	10n	20n$	250m	5.2	0.0	-1.6%	-.96	30m#			0	7	A150a	ML169
51	RI10144M	256	1	S	BEX	10n	20n$	250m	5.2	0.0	-1.6%	-.96	30m#			2	8	A150a	ML141
52	MB7042H	256	1	S	BEX	12n	8.0n$	702m	5.2	0.0	-1.4	-1.1	30mØ			0	7	A178	DL16h
53	MB7042	256	1	S	BEX	14n	8.0n$	702m	5.2	0.0	-1.4	-1.1	30mØ			0	7	A178	DL16h
54	uPB10144D	256	1	S	BEX	25n		800m	5.2	0.0	-1.6	-.96				3	8	A440	DL16es
55	MCM10144F	256	1	S	BEX	26n	25n$	676m	5.2	0.0	-1.4	-1.1	50mØ			0	7	A165	FL34
56	MCM10544F	256	1	S	BEX	26n	25n$	676m	5.2	0.0	-1.4	-1.1	50mØ			5	C	A165	DL16ex
57	MCM10544L	256	1	S	BEX	26n	25n$	676m	5.2	0.0	-1.4	-1.1	50mØ			5	C	A165	DL16bm
58	MCM10144AL	256	1	S	BEX	30n	40n	520mØ	5.2	0.0	-1.6%	-.70				3	8	A165	DL16m
59	RC10144	256	1	S	BEX	30n		350m	0.0	5.0			16m	.45		0	7		
60	RC95410	256	1	S	BEX	30n		350m	0.0	5.0			16m	.45		0	7		
61	10410FC	256	1	S	BEX	35n	38n	500m†	5.2	0.0	-1.4	-1.1	30mØ			0	7	A150	FL14
62	F10411DC	256	1	S	BEX	35n	30n$	650m	5.2	0.0	-1.4	-1.0	30mØ			0	7	A150	DL16cw
63	F10411FC	256	1	S	BEX	35n	30n$	650m	5.2	0.0	-1.4	-1.0	30mØ			0	7	A150	FL14
64	F10411PC	256	1	S	BEX	35n	30n$	650m	5.2	0.0	-1.4	-1.0	30mØ			0	7	A150	DL16dh
65	GXB10410	256	1	S	BEX	35n	25n$	470m†	5.2	0.0	-1.6%	-.90	30mØ			0	7	A314	DL16w
66	MB7044	256	1	S	BEX	35n	25n$	710m	5.2	0.0	-1.8*	-.84				0	7	A178	DL16u
67	MBM10410	256	1	S	BEX	35n	25n$	710m	5.2	0.0	-1.8*	-.84				0	7	A178	DL16u
68	SN10144J	256	1	S	BEX	35n	25n$	650m	5.2	0.0	-1.6	-.98				0	8	A178	DL16fh
69	95410DC	256	1	S	BEX	40n	43n	500m†	5.2	0.0	-1.5	-1.1	30mØ	-1.1		0	7	A82	DL16n
70	HM2104	256	1	S	BEX	40n	30n$	1.8m%	5.2	0.0	-1.5	-1.1	30mØ			0	7	A150	ML22c
71	SFC80106AK	256	1	S	BTC	60n	75n	620m	0.0	5.0	.85	2.0§	15m	.45		5	C		DL16am
72	SFC80107K	256	1	S	BTC	60n	75n	620m	0.0	5.0	.85	2.0	15m	.45		5	C		DL16am
73	SN54S200J	256	1	S	BTD	31n	50n$	435m†	0.0	5.0	.80	2.0§	8.0m	.50		5	C	A115	DL16fh
74	SN54S200N	256	1	S	BTD	31n	50n$	435m†	0.0	5.0	.80	2.0§	8.0m	.50		5	C	A115	DL16ey
75	SN54S200W	256	1	S	BTD	31n	50n$	435m†	0.0	5.0	.80	2.0§	8.0m	.50		5	C	A115	MO004AG
76	SN74S200J	256	1	S	BTD	31n	40n$	435m†	0.0	5.0	.80	2.0§	12m	.50		0	7	A115	DL16fh
77	SN74S200N	256	1	S	BTD	31n	40n$	435m†	0.0	5.0	.80	2.0§	12m	.50		0	7	A115	DL16ey
78	SN74S200W	256	1	S	BTD	31n	40n$	435m†	0.0	5.0	.80	2.0§	12m	.50		0	7	A115	MO004AG
79	SN54S206J	256	1	S	BTD	33n	50n$	435m†	0.0	5.0	.80	2.0	8.0m	.50		5	C	A115	DL16fh
80	SN54S206N	256	1	S	BTD	33n	50n$	435m†	0.0	5.0	.80	2.0	8.0m	.50		5	C	A115	DL16ey
81	SN54S206W	256	1	S	BTD	33n	50n$	435m†	0.0	5.0	.80	2.0	8.0m	.50		5	C	A115	MO004AG
82	SN74S206J	256	1	S	BTD	33n	40n$	435m†	0.0	5.0	.80	2.0	12m	.50		0	7	A115	DL16fh
83	SN74S206N	256	1	S	BTD	33n	40n$	435m†	0.0	5.0	.80	2.0	12m	.50		0	7	A115	DL16ey
84	SN74S206W	256	1	S	BTD	33n	40n$	435m†	0.0	5.0	.80	2.0	12m	.50		0	7	A115	MO004AG
85	N8206I	256	1	S	BTD	35n	60n	500m	0.0	5.0	.85	2.0§	16n	.45		0	7	A76	
86	N8207I	256	1	S	BTD	35n	60n	500m	0.0	5.0	.85	2.0	16m	.45		0	7	A76	
87	S8206I	256	1	S	BTD	35n	60n	500m	0.0	5.0	.85	2.0§	16m	.45		5	C	A76	
88	S8207I	256	1	S	BTD	35n	60n	500m	0.0	5.0	.85	2.0	16m	.45		5	C	A76	
89	N82S116B	256	1	S	BTD	40n	25n	603m	0.0	5.0	.85	2.0§	16m	.45		0	7	74S200	DL16fm
90	N82S117B	256	1	S	BTD	40n	25n	603m	0.0	5.0	.85	2.0Δ	16m	.45		0	7	74S300	DL16fm
91	N82S117F	256	1	S	BTD	40n	25n	1.5m%†	0.0	5.0	.85	2.0Δ	16m	.45		0	7	74S300	DL16cv
92	N82S117N	256	1	S	BTD	40n	25n$	350m	0.0	5.0	.85	2.0Δ	16m	.45		0	7	74S300	DL16fm
93	RC82S116F	256	1	S	BTD	40n	25n	575m	0.0	5.0	.85	2.0§	16m	.45		5	C	74S200	DL16cv
94	RC82S117F	256	1	S	BTD	40n	25n	575m	0.0	5.0	.85	2.0Δ	16m	.45		5	C	74S300	DL16cv
95	S82S116N	256	1	S	BTD	40n	25n	1.5m%†	0.0	5.0	.80	2.0Δ	16m	.50		5	C	A243	DL16fn
96	SN74S200AJ	256	1	S	BTD	40n	30n$	500m†	0.0	5.0	.80	2.0§	16m	.45		0	6	PN16ai	DL16fh
97	SN74S200AN	256	1	S	BTD	40n	30n$	500m†	0.0	5.0	.80	2.0§	16m	.45		0	6	PN16ai	DL16ey
98	SN74LS200AJ	256	1	S	BTD	45n	35 $	275m†	0.0	5.0	.80	2.0§	16m	.45		0	6	PN16ai	DL16fh
99	SN74LS200AN	256	1	S	BTD	45n	35 $	275m†	0.0	5.0	.80	2.0§	16m	.45		0	6	PN16ai	DL16ey
100	SN74LS300AJ	256	1	S	BTD	45n	35n$	275m†	0.0	5.0	.80	2.0Δ	16m	.45		0	6	PN16ai	DL16fh
101	SN74LS300AN	256	1	S	BTD	45n	35n$	275m†	0.0	5.0	.80	2.0Δ	16m	.45		0	6	PN16ai	DL16ey
102	SN74S300AJ	256	1	S	BTD	45n	40n$	500m†	0.0	5.0	.80	2.0Δ	16m	.45		0	6	PN16ai	DL16fh
103	SN74S300AN	256	1	S	BTD	45n	40n$	500m†	0.0	5.0	.80	2.0Δ	16m	.45		0	6	PN16ai	DL16ey
104	C3102A	256	1	S	BTD	50n	70n	525m	0.0	5.0	.85	2.0	15m	.45		0	7	A5	DL16ek
105	DM74S200J	256	1	S	BTD	50n	40n$	650m	0.0	5.0	.80	2.0§	16m	.45		0	7	A115	DL16cr
106	DM74S200N	256	1	S	BTD	50n	40n$	650m	0.0	5.0	.80	2.0§	16m	.45		0	7	A115	DL16bh
107	DM74S200W	256	1	S	BTD	50n	40n$	650m	0.0	5.0	.80	2.0§	16m	.45		0	7	A115	FL39
108	IM55S23CJE	256	1	S	BTD	50n	35n$	450m†	0.0	5.0	.80	2.0§	16m	.45		0	7	PN16g	DL16cq
109	IM55S33CJE	256	1	S	BTD	50n	35n$	450m†	0.0	5.0	.80	2.0Δ	16m	.45		0	7	PN16g	DL16cq
110	N74S200B	256	1	S	BTD	50n	50n	650m	0.0	5.0	.85	2.0§	16m	.45		0	7	A243	DL16fm

SYMBOLS AND CODES EXPLAINED IN INTERPRETER

2. READ-WRITE MEMORIES (RAMS)

IN ORDER OF (1)No.WORDS(2)No.BITS/WORD (3)MODE(4)STRUCT.(5)MAX ACC.TIME(6)TYPE No.

LINE No.	6 TYPE NUMBER	ORGANIZATION 1 NO. OF WORDS	2 BITS PER WORD	3 MODE	4 STRUCTURE CODE	5 MAX. ACCESS TIME (S)	MAX. WRITE CYCLE TIME (S)	MAX. POWER DISS. (W)	POWER SUPPLY SPAN NEG. (V)	POS. (V)	INPUT LOGIC LEVELS MAX. '0' (V)	MIN. '1' (V)	MIN.OUTPUT SINK CURRENT (A)	@ OUT (V)	MIN. CLOCK FREQ. (Hz)	OPER TEMP RNGE CODE -	+	DRAWINGS FUNCTIONAL EQUIVALENT NUMBER	OUTLINE
1	N74S201B	256	1	S	BTD	50n	50n	650m	0.0	5.0	.85	2.0§	16m	.45		0	7	A243	DL16fm
2	N74S201F	256	1	S	BTD	50n	50n	650m	0.0	5.0	.85	2.0§	16m	.45		0	7	A243	DL16cv
3	N74S201N	256	1	S	BTD	50n	40n$	650m	0.0	5.0	.85	2.0§	16m	.45		0	7	A243	DL16fm
4	N74S301B	256	1	S	BTD	50n	50n	650m	0.0	5.0	.85	2.0Δ	16m	.45		0	7	74S301	DL16fm
5	N74S301R	256	1	S	BTD	50n	50n	1.5m%†	0.0	5.0	0.85	2.0Δ	16m	0.45		0	7	54S301	FL14m
6	N82S16B	256	1	S	BTD	50n	55n	1.5m%†	0.0	5.0	.85	2.0§	16m	.45		0	7	74S200	DL16fm
7	N82S17B	256	1	S	BTD	50n	55n	1.5m%†	0.0	5.0	.85	2.0Δ	16m	.45		0	7	74S300	DL16fm
8	P3102A	256	1	S	BTD	50n	70n	525m	0.0	5.0	.85	2.0	15m	.45		0	7	A5	ML2d
9	6530	256	1	S	BTD	55n	45n$	675m	0.0	5.0	.85	2.0	15m	.50		0	7	A154	DL16v
10	6530N	256	1	S	BTD	55n	50n$	650m	0.0	5.0	.80	2.0Δ	15m	.50		0	7	A154	DL16dj
11	6531	256	1	S	BTD	55n	45n$	675m	0.0	5.0	.85	2.0§	15m	.50		0	7	A154	DL16v
12	6531N	256	1	S	BTD	55n	50n$	650m	0.0	5.0	.80	2.0§	15m	.50		0	7	A154	DL16dj
13	SN54LS200AJ	256	1	S	BTD	55n	50n$	275m†	0.0	5.0	.80	2.0§	16m	.50		5	C	PN16ai	DL16fh
14	SN54LS300AJ	256	1	S	BTD	55n	50n$	275m†	0.0	5.0	.80	2.0Δ	16m	.50		5	C	PN16ai	DL16fh
15	SN54LS300AW	256	1	S	BTD	55n	50n$	275m†	0.0	5.0	.80	2.0Δ	16m	.50		5	C	PN16ai	MO004AG
16	C3106A	256	1	S	BTD	60n	50n$	682m	0.0	5.0	.85	2.0§	15m	.45		0	7	A63	DL16ek
17	C3107A	256	1	S	BTD	60n	50n$	682m	0.0	5.0	.85	2.0	15m	.45		0	7	A63	DL16ek
18	D3106A	256	1	S	BTD	60n	50n$	682m	0.0	5.0	.85	2.0§	15m	.45		0	7	A63	DL16cm
19	D3107A	256	1	S	BTD	60n	50n$	682m	0.0	5.0	.85	2.0	15m	.45		0	7	A63	DL16cm
20	DM74S206J	256	1	S	BTD	60n	40n$	650m	0.0	5.0	.80	2.0Δ	16m	.45		0	7	A115	DL16cr
21	DM74S206N	256	1	S	BTD	60n	40n$	650m	0.0	5.0	.80	2.0Δ	16m	.45		0	7	A115	DL16bh
22	DM74S206W	256	1	S	BTD	60n	40n$	650m	0.0	5.0	.80	2.0	16m	.45		0	7	A115	FL39
23	IM55S23MJE	256	1	S	BTD	60n	45n$	450m†	0.0	5.0	.80	2.0§	16m	.45		5	C	PN16g	DL16cq
24	IM55S33MJE	256	1	S	BTD	60n	45n$	450m†	0.0	5.0	.80	2.0Δ	16m	.45		5	C	PN16g	DL16cq
25	P3106A	256	1	S	BTD	60n	50n$	682m	0.0	5.0	.85	2.0§	15m	.45		0	7	A63	DL16at
26	P3107A	256	1	S	BTD	60n	50n$	682m	0.0	5.0	.85	2.0	15m	.45		0	7	A63	DL16at
27	SN54S200AJ	256	1	S	BTD	60n	40n$	500m†	0.0	5.0	.80	2.0§	16m	.50		5	C	PN16ai	DL16fh
28	SN54S200AW	256	1	S	BTD	60n	40n$	500m†	0.0	5.0	.80	2.0§	16m	.50		5	C	PN16ai	MO004AG
29	SN54S300AJ	256	1	S	BTD	65n	50n$	500m†	0.0	5.0	.80	2.0Δ	16m	.50		5	C	PN16ai	DL16fh
30	SN54S300AW	256	1	S	BTD	65n	50n$	500m†	0.0	5.0	.80	2.0Δ	16m	.50		5	C	PN16ai	MO004AG
31	5530	256	1	S	BTD	70n	65n$	675m	0.0	5.0	.85	2.0	10m	.50		5	C	A154	DL16v
32	5530F	256	1	S	BTD	70n	70n$	650m	0.0	5.0	.80	2.0Δ	10m	.50		5	C	A154	FL49
33	5530J	256	1	S	BTD	70n	70n$	650m	0.0	5.0	.80	2.0Δ	10m	.50		5	C	A154	DL16bi
34	5530N	256	1	S	BTD	70n	65n$	675m	0.0	5.0	.85	2.0	10m	.50		5	C	A154	DL16da
35	5531	256	1	S	BTD	70n	65n$	675m	0.0	5.0	.85	2.0§	10m	.50		5	C	A154	DL16v
36	5531F	256	1	S	BTD	70n	70n$	650m	0.0	5.0	.80	2.0§	10m	.50		5	C	A154	FL49
37	5531J	256	1	S	BTD	70n	70n$	650m	0.0	5.0	.80	2.0§	10m	.50		5	C	A154	DL16bi
38	5531N	256	1	S	BTD	70n	65n$	675m	0.0	5.0	.85	2.0§	10m	.50		5	C	A154	DL16da
39	DM54S200J	256	1	S	BTD	70n	50n$	650m	0.0	5.0	.80	2.0§	16m	.50		5	C	A115	DL16cr
40	DM54S200W	256	1	S	BTD	70n	50n$	650m	0.0	5.0	.80	2.0§	16m	.50		5	C	A115	FL39
41	MMI5530J	256	1	S	BTD	70n		675m	0.0	5.0	.85	2.0				5	C		
42	RC54S200F	256	1	S	BTD	70n	60n	650m	0.0	5.0	.80	2.0§	16m	.50		5	C	74S200	DL16cv
43	RC82S16F	256	1	S	BTD	70n	40n$	1.5m%†	0.0	5.0	.80	2.0§	16m	.50		5	C	74S200	DL16cv
44	RC82S17F	256	1	S	BTD	70n	40n$	1.5m%†	0.0	5.0	.80	2.0Δ	16m	.50		5	C	74S300	DL16cv
45	S54S200F	256	1	S	BTD	70n	60n	650m	0.0	5.0	.80	2.0§	16m	.50		5	C	A243	DL16cv
46	S54S201F	256	1	S	BTD	70n	60n	650m	0.0	5.0	.80	2.0§	16m	.50		5	C	A243	DL16cv
47	S82S17N	256	1	S	BTD	70n	40n$	600m	0.0	5.0	.80	2.0Δ	16m	.50		5	C	74S301	DL16fm
48	C3102	256	1	S	BTD	80n	90n	625m	0.0	5.0	.85	2.0	15m	.45		0	7	A5	DL16ek
49	C3106	256	1	S	BTD	80n	60n$	682m	0.0	5.0	.85	2.0§	15m	.45		0	7	A63	DL16ek
50	C3106-8	256	1	S	BTD	80n	80n$	650m	0.0	5.0	.85	2.0§	15m	.45		0	7	A63	DL16ek
51	C3107	256	1	S	BTD	80n	60n$	682m	0.0	5.0	.85	2.0	15m	.45		0	7	A63	DL16ek
52	C3107-8	256	1	S	BTD	80n	80n$	650m	0.0	5.0	.85	2.0	15m	.45		0	7	A63	DL16ek
53	D3106	256	1	S	BTD	80n	60n$	682m	0.0	5.0	.85	2.0§	15m	.45		0	7	A63	DL16cm
54	D3106-8	256	1	S	BTD	80n	80n$	682m	0.0	5.0	.85	2.0§	15m	.45		0	7	A63	DL16cm
55	D3107	256	1	S	BTD	80n	60n$	682m	0.0	5.0	.85	2.0	15m	.45		0	7	A63	DL16cm
56	D3107-8	256	1	S	BTD	80n	80n$	682m	0.0	5.0	.85	2.0	15m	.45		0	7	A63	DL16cm
57	DM54S206J	256	1	S	BTD	80n	50n$	650m	0.0	5.0	.80	2.0Δ	16m	.50		5	C	A115	DL16cr
58	DM54S206N	256	1	S	BTD	80n	50n$	650m	0.0	5.0	.80	2.0	16m	.50		5	C	A115	DL16bh
59	DM54S206W	256	1	S	BTD	80n	50n$	650m	0.0	5.0	.80	2.0	16m	.50		5	C	A115	FL39
60	P3102	256	1	S	BTD	80n	90n	625m	0.0	5.0	.85	2.0	15m	.45		0	7	A5	ML2d
61	P3106	256	1	S	BTD	80n	60n$	682m	0.0	5.0	.85	2.0§	15m	.45		0	7	A63	DL16at
62	P3106-8	256	1	S	BTD	80n	80n$	682m	0.0	5.0	.85	2.0§	15m	.45		0	7	A63	DL16at
63	P3107	256	1	S	BTD	80n	60n$	682m	0.0	5.0	.85	2.0	15m	.45		0	7	A63	DL16at
64	P3107-8	256	1	S	BTD	80n	80n$	682m	0.0	5.0	.85	2.0	15m	.45		0	7	A63	DL16at
65	MD6510	256	1	S	BTD	85n	200n	450m	0.0	5.2	.85	2.0	10m	.45		0	7	A54	TO116
66	AM270051E	256	1	S	BTD	95n	60n	650m	0.0	5.0	.80	2.0	16m	.40		5	C		DLØ
67	AM270151E	256	1	S	BTD	95n	60n	650m	0.0	5.0	.80	2.0	16m	.40		5	C		DLØ
68	L6530	256	1	S	BTD	115n	85n$	275m†	0.0	5.0	.80	2.0	15m	.50		0	7	A154	DL16v
69	L6530N	256	1	S	BTD	115n	85n$	425m	0.0	5.0	.80	2.0Δ	15m	.50		0	7	A154	DL16dj
70	L6531	256	1	S	BTD	115n	85n$	275m†	0.0	5.0	.80	2.0§	15m	.50		0	7	A154	DL16v
71	L6531N	256	1	S	BTD	115n	85n$	275m†	0.0	5.0	.80	2.0§	15m	.50		0	7	A154	DL16da
72	L5530	256	1	S	BTD	130n	100n$	275m†	0.0	5.0	.80	2.0	10m	.50		5	C	A154	DL16v
73	L5530F	256	1	S	BTD	130n	100n$	500m	0.0	5.0	.80	2.0Δ	10m	.50		5	C	A154	FL49
74	L5530J	256	1	S	BTD	130n	100n$	500m	0.0	5.0	.80	2.0Δ	10m	.50		5	C	A154	DL16bi
75	L5530N	256	1	S	BTD	130n	100n$	275m†	0.0	5.0	.80	2.0	10m	.50		5	C	A154	DL16da
76	L5531	256	1	S	BTD	130n	100n$	275m†	0.0	5.0	.80	2.0§	10m	.50		5	C	A154	DL16v
77	L5531F	256	1	S	BTD	130n	100n$	500m	0.0	5.0	.80	2.0§	10m	.50		5	C	A154	FL49
78	L5531J	256	1	S	BTD	130n	100n$	500m	0.0	5.0	.80	2.0§	10m	.50		5	C	A154	DL16bi
79	L5531N	256	1	S	BTD	130n	100n$	275m†	0.0	5.0	.80	2.0§	10m	.50		5	C	A154	DL16da
80	T74S200J	256	1	S	BTX	35n	40n	450m†	0.0	5.0	.80	2.0	12m	.40		0	7	A91	DL16ey
81	93421ADC	256	1	S	BTX	40n	35n	675m	0.0	5.0	.85	2.0§	16m	.45		0	7	A153	DL16n
82	DM74200D	256	1	S	BTX	40n	25n$	650m	0.0	5.0	.80	2.0§	24m	.40		0	7	PN16p	DL16bg
83	DM74200N	256	1	S	BTX	40n	25n$	650m	0.0	5.0	.80	2.0§	24m	.40		0	7	PN16p	DL16bh
84	RC5330M	256	1	S	BTX	40n	40n	250m	0.0	5.0	.80	2.0	16m	.45		0	7	A161	ML141
85	RC5330MP	256	1	S	BTX	40n	40n	250m	0.0	5.0	.80	2.0	16m	.45		0	7	A161	ML169
86	RC5340M	256	1	S	BTX	40n	40n	250m	0.0	5.0	.80	2.0§	16m	.45		0	7	A161	ML141
87	RC5340MP	256	1	S	BTX	40n	40n	250m	0.0	5.0	.80	2.0§	16m	.45		0	7	A161	ML169
88	RM5330L	256	1	S	BTX	40n	40n	250m	0.0	5.0	.80	2.0	16m	.45		5	C	A161	FL25
89	RM5330M	256	1	S	BTX	40n	40n	250m	0.0	5.0	.80	2.0	16m	.45		5	C	A161	ML141
90	RM5340L	256	1	S	BTX	40n	40n	250m	0.0	5.0	.80	2.0§	16m	.45		5	C	A161	FL25
91	RM5340M	256	1	S	BTX	40n	40n	250m	0.0	5.0	.80	2.0§	16m	.45		5	C	A161	ML141
92	SN74200D	256	1	S	BTX	40n	25n$	2.0m%†	0.0	5.0	.80	2.0§	24m	.40		0	7	PN16p	DL16bg
93	SN74200J	256	1	S	BTX	42n	40n$	1.8m%	0.0	5.0	.80	2.0§	12m	.40		0	7	A91	DL16fh
94	SN74200N	256	1	S	BTX	42n	40n$	1.8m%	0.0	5.0	.80	2.0§	12m	.40		0	7	A91	DL16ey
95	93L420DC	256	1	S	BTX	45n	50n	350m	0.0	5.0	.85	2.0§	16m	.45		0	7	A153	DL16n
96	93410AFC	256	1	S	BTX	45n	30n$	700m	0.0	5.0	.85	2.0Δ	16m	.45		0	7	A150b	FL14
97	93410APC	256	1	S	BTX	45n	30n$	700m	0.0	5.0	.85	2.0Δ	16m	.45		0	7	A150b	DL16dh
98	93411ADC	256	1	S	BTX	45n	45n	675m	0.0	5.0	.85	2.0	16m	.45		0	7	A150a	DL16n
99	93421DC	256	1	S	BTX	50n	35n	620m	0.0	5.0	.85	2.0§	16m	.45		0	7	A153	DL16n
100	93421PC	256	1	S	BTX	50n	35n	620m	0.0	5.0	.85	2.0§	16m	.45		0	7	A153	DL16dh
101	DM8582D	256	1	S	BTX	50n	25n$	625m	0.0	5.0	.80	2.0	24m	.40		0	7	PN16p	DL16bg
102	DM8582N	256	1	S	BTX	50n	25n$	625m	0.0	5.0	.80	2.0	24m	.40		0	7	PN16p	DL16bh
103	FJB93410	256	1	S	BTX	50n	30n$	460m†	0.0	5.0	.95	2.0	16m	.45		0	7	A24a	ML4e
104	TM106	256	1	S	BTX	50n	35n	620m	0.0	5.0	.80	2.0§	16m	.45		0	7	A153	DL16dh
105	uPB2200D	256	1	S	BTX	50n	40n$	575m	0.0	5.0	.80	2.0§	16m	.50		2	7	A440a	DL16es
106	uPB2206D	256	1	S	BTX	50n	40n$	575m	0.0	5.0	.80	2.0	16m	.50		2	7		DL16es
107	93L420DM	256	1	S	BTX	55n	55n	350m	0.0	5.0	.85	2.0§	16m	.45		5	C	A153	DL16n
108	93L420FM	256	1	S	BTX	55n	55n	350m	0.0	5.0	.85	2.0§	16m	.45		5	C	A153	FL14
109	93411DC	256	1	S	BTX	55n	45n	620m	0.0	5.0	.85	2.0	16m	.45		0	7	A150a	DL16n
110	93411FC	256	1	S	BTX	55n	40n	475m†	0.0	5.0	.85	2.0	16m	.45		0	7		FLØ

SYMBOLS AND CODES EXPLAINED IN INTERPRETER

2. READ-WRITE MEMORIES (RAMS)

IN ORDER OF (1)No.WORDS(2)No.BITS/WORD (3)MODE(4)STRUCT.(5)MAX ACC.TIME(6)TYPE No.

LINE No.	6 TYPE NUMBER	ORGANIZATION 1 NO. OF WORDS	2 BITS PER WORD	3 MODE	4 STRUCTURE CODE	5 MAX. ACCESS TIME (S)	MAX. WRITE CYCLE TIME (S)	MAX. POWER DISS. (W)	POWER SUPPLY SPAN NEG. (V)	POWER SUPPLY SPAN POS. (V)	INPUT LOGIC LEVELS MAX. '0' (V)	INPUT LOGIC LEVELS MIN. '1' (V)	MIN.OUTPUT SINK CURRENT (A)	MIN.OUTPUT SINK CURRENT @ OUT (V)	MIN. CLOCK FREQ. (Hz)	OPER TEMP RNGE CODE -	OPER TEMP RNGE CODE +	DRAWINGS FUNCTIONAL EQUIVALENT NUMBER	DRAWINGS OUTLINE
1	93411PC	256	1	S	BTX	55n	45n	620m	0.0	5.0	.85	2.0	16m	.45		0	7	A150a	DL16dh
2	TM107	256	1	S	BTX	55n	45n	620m	0.0	5.0	.85	2.0§	16m	.45		0	7	A150a	DL16dh
3	93410DC	256	1	S	BTX	60n	30n$	676m	0.0	5.0	-1.4	2.0Δ	16m	.45		0	7	A150	DL16cw
4	93410FC	256	1	S	BTX	60n	30n$	700m	0.0	5.0	.85	2.0Δ	16m	.45		0	7	A150b	FL14
5	93410PC	256	1	S	BTX	60n	30n$	700m	0.0	5.0	.85	2.0Δ	16m	.45		0	7	A150b	DL16dh
6	93421DM	256	1	S	BTX	60n	45n	715m	0.0	5.0	.85	2.0§	16m	.45		5	C	A153	DL16n
7	93421FM	256	1	S	BTX	60n	45n	715m	0.0	5.0	.85	2.0§	16m	.45		5	C	A153	FL14
8	IM5503ACDE	256	1	S	BTX	60n	35n$	625m	0.0	5.0	.80	2.0	16m	.45		0	7	A30	DL16b
9	IM5503ACPE	256	1	S	BTX	60n	35n$	625m	0.0	5.0	.80	2.0	16m	.45		0	7	A30	DL16ao
10	IM5523ACDE	256	1	S	BTX	60n	35n$	625m	0.0	5.0	.80	2.0§	16m	.45		0	7	A30	DL16b
11	IM5523ACPE	256	1	S	BTX	60n	35n$	625m	0.0	5.0	.80	2.0§	16m	.45		0	7	A30	DL16ao
12	IM5533ACDE	256	1	S	BTX	60n	35n$	625m	0.0	5.0	.80	2.0	16m	.45		0	7	A30	DL16b
13	IM5533ACPE	256	1	S	BTX	60n	35n$	625m	0.0	5.0	.80	2.0	16m	.45		0	7	A30	DL16ao
14	93411DM	256	1	S	BTX	65n	55n	715m	0.0	5.0	.85	2.0	16m	.45		5	C	A150a	DL16n
15	93411FM	256	1	S	BTX	65n	55n	715m	0.0	5.0	.85	2.0	16m	.45		5	C	A150a	FL14
16	HM2505	256	1	S	BTX	65n	40n$	1.2mØ	0.0	5.0	.80	2.0§	16m	.50		0	6	A150c	ML22c
17	uPB2202D	256	1	S	BTX	65n	40n$	375m	0.0	5.0	.80	2.0§	16m	.50		2	7	A440a	DL16es
18	93410DM	256	1	S	BTX	70n	40n$	725m	0.0	5.0	.85	2.0Δ	16m	.45		5	C	A150b	DL16cw
19	93410FM	256	1	S	BTX	70n	40n$	725m	0.0	5.0	.85	2.0Δ	16m	.45		5	C	A150b	FL14
20	IM5503AMDE	256	1	S	BTX	70n	40n$	700m	0.0	5.0	.80	2.0	16m	.45		5	C	A30	DL16b
21	IM5503AMFE	256	1	S	BTX	70n	40n$	700m	0.0	5.0	.80	2.0	16m	.45		5	C	A30	FL27
22	IM5523AMDE	256	1	S	BTX	70n	40n$	700m	0.0	5.0	.80	2.0§	16m	.45		5	C	A30	DL16b
23	IM5523AMFE	256	1	S	BTX	70n	40n$	700m	0.0	5.0	.80	2.0§	16m	.45		5	C	A30	FL27
24	IM5533AMDE	256	1	S	BTX	70n	40n$	700m	0.0	5.0	.80	2.0	16m	.45		5	C	A30	DL16b
25	IM5533AMFE	256	1	S	BTX	70n	40n$	700m	0.0	5.0	.80	2.0	16m	.45		5	C	A30	FL27
26	93411PM	256	1	S	BTX	75n	50n	475m†	0.0	5.0	.85	2.0	16m	.45		5	C		DLØ
27	FLQ141-74200	256	1	S	BTX	80n	90n$	625m	0.0	5.0	.80	2.0	16m	.45		0	7	A307	DLØ
28	IM5503CDE	256	1	S	BTX	80n	65n$	625m	0.0	5.0	.80	2.0	16m	.45		0	7	A30	DL16b
29	IM5503CFE	256	1	S	BTX	80n	65n$	625m	0.0	5.0	.80	2.0	16m	.45		0	7	A30	FL27
30	IM5503CPE	256	1	S	BTX	80n	65n$	625m	0.0	5.0	.80	2.0	16m	.45		0	7	A30	DL16ao
31	IM5503MDE	256	1	S	BTX	80n	65n$	700m	0.0	5.0	.80	2.0	16m	.45		5	C	A30	DL16b
32	IM5503MFE	256	1	S	BTX	80n	65n$	700m	0.0	5.0	.80	2.0	16m	.45		5	C	A30	FL27
33	IM5503MPE	256	1	S	BTX	80n	65n$	700m	0.0	5.0	.80	2.0	16m	.45		5	C	A30	DL16ao
34	IM5523CDE	256	1	S	BTX	80n	65n$	625m	0.0	5.0	.80	2.0	16m	.45		0	7	A30	DL16b
35	IM5523CFE	256	1	S	BTX	80n	65n$	625m	0.0	5.0	.80	2.0	16m	.45		0	7	A30	FL27
36	IM5523CPE	256	1	S	BTX	80n	65n$	625m	0.0	5.0	.80	2.0	16m	.45		0	7	A30	DL16ao
37	IM5523MDE	256	1	S	BTX	80n	65n$	700m	0.0	5.0	.80	2.0	16m	.45		5	C	A30	DL16b
38	IM5523MFE	256	1	S	BTX	80n	65n$	700m	0.0	5.0	.80	2.0	16m	.45		5	C	A30	FL27
39	IM5523MPE	256	1	S	BTX	80n	65n$	700m	0.0	5.0	.80	2.0	16m	.45		5	C	A30	DL16ao
40	IM5533CDE	256	1	S	BTX	80n	65n$	625m	0.0	5.0	.80	2.0	16m	.45		0	7	A30	DL16b
41	IM5533CFE	256	1	S	BTX	80n	65n$	625m	0.0	5.0	.80	2.0	16m	.45		0	7	A30	FL27
42	IM5533CPE	256	1	S	BTX	80n	65n$	625m	0.0	5.0	.80	2.0	16m	.45		0	7	A30	DL16ao
43	IM5533MDE	256	1	S	BTX	80n	65n$	700m	0.0	5.0	.80	2.0	16m	.45		5	C	A30	DL16b
44	IM5533MFE	256	1	S	BTX	80n	65n$	700m	0.0	5.0	.80	2.0	16m	.45		5	C	A30	FL27
45	IM5533MPE	256	1	S	BTX	80n	65n$	700m	0.0	5.0	.80	2.0	16m	.45		5	C	A30	DL16ao
46	MM6510	256	1	S	BTX	85n	80n	425m	0.0	5.0	.85	2.0	10m	.45		0	7	A54	ML54
47	RR5300L-PR	256	1	S	BTX	85n	65n$	625m	0.0	5.0	.80	2.0	16m	.45		5	C	A123	FL14d
48	RR5300MM-PR	256	1	S	BTX	85n	65n$	625m	0.0	5.0	.80	2.0	16m	.45		5	C	A123	ML141
49	RR5302MM-PR	256	1	S	BTX	85n	65n$	625m	0.0	5.0	.80	2.0	16m	.45		0	7	A123	ML141
50	RR5302MP-PR	256	1	S	BTX	85n	65n$	625m	0.0	5.0	.80	2.0	16m	.45		0	7	A123	DL16ci
51	93L421DC	256	1	S	BTX	90n	60n	350m	0.0	5.0	.85	2.0§	16m	.45		0	7	A153	DL16n
52	93L421PC	256	1	S	BTX	90n	60n	350m	0.0	5.0	.85	2.0§	16m	.45		0	7	A153	DL16dh
53	CM2150	256	1	S	BTX	90n	40n$	2.5m%†	0.0	5.0	.80	2.0	10m	.40		0	8	A24	
54	93L421DM	256	1	S	BTX	100n	70n	350m	0.0	5.5	.85	2.0§	16m	.45		5	C	A153	DL16n
55	93L421FM	256	1	S	BTX	100n	70n	350m	0.0	5.5	.85	2.0§	16m	.45		5	C	A153	FL14
56	93400DC	256	1	S	BTX	100n	80n$	700mØ	0.0	5.5	.85	2.0	5.0m	.45		0	7	A50	DL16au
57	MM6505	256	1	S	BTX	120n	80n	2.0m♦%	0.0	5.0	.45%		15m	.45		0	8	A53	ML55
58	GZQ101	256	1	S	BTX	130n	130n	20u%	0.0	5.0	1.0	3.5	1.6m	.45		0	7	A106	ML4a
59	93400BDC	256	1	S	BTX	200n	100n$	700mØ	0.0	5.0	.85	2.0	5.0m	.45		0	7	A50	DL16au
60	GDQ101	256	1	S	BTX	1.0u	200n	1.4m%†	14	13	3.0	11	600u♦†	12		0	7	PN16e	ML78a
61	GDQ106	256	1	S	BTX	1.0u	200n	1.4m%†	14	13	3.0	11	600u♦†	12		4	8	PN16e	ML78a
62	pMS256x1C	256	1	S	HXX	1.0u		400m†	13	0.0	-2.0	-9.0				0	7		
63	SCL5553D	256	1	S	MCA	150n	150n	200mØ	0.0	12	2.5	9.0				5	C	A89	DL16aw
64	SCL5553F	256	1	S	MCA	150n	150n	200mØ	0.0	12	2.5	9.0				5	C	A89	FL5c
65	SCL5553H	256	1	S	MCA	150n	150n	200mØ	0.0	12	2.5	9.0							CHØ
66	CD4061AD-PR	256	1	S	MCA	290n	500n	25u♦†	0.0	5.0	.010%	4.99	1.6m	.40		5	C	A121	DL16r
67	IM6524A-1IDN	256	1	S	MCG	135n	110n$	1.1m♦	0.0	11	2.2	7.7	1.0uΔ	0.0		4	8	A253	DL16b
68	IM6524A-1MDN	256	1	S	MCG	135n	110n$	1.1m♦	0.0	11	2.2	7.7	1.0uΔ	0.0		5	C	A253	DL16b
69	IM6524AIDN	256	1	S	MCG	190n	160n$	5.5m♦	0.0	11	2.2	7.7	1.0uΔ	0.0		4	8	A253	DL16b
70	IM6524AMDN	256	1	S	MCG	190n	160n$	5.5m♦	0.0	11	2.2	7.7	1.0uΔ	0.0		5	C	A253	DL16b
71	GZF1400D	256	1	S	MCG	200n	200n	100u♦	0.0	10	3.0	7.0	1.6m	.40		3	8	A288	DL16w
72	IM6524CFE	256	1	S	MCG	250n	100n	5.0u♦†	0.0	5.0	.80	3.0	1.0uΔ	0.0		0	7	PN16g	FL14e
73	IM6524CPE	256	1	S	MCG	250n	100n	5.0u♦†	0.0	5.0	.80	3.0	1.0uΔ	0.0		0	7	PN16g	DL16bv
74	IM6524MFE	256	1	S	MCG	250n	100n	5.0u♦†	0.0	5.0	.80	3.0	1.0uΔ	0.0		5	C	PN16g	FL14e
75	IM6524MPE	256	1	S	MCG	250n	100n	5.0u♦†	0.0	5.0	.80	3.0	1.0uΔ	0.0		5	C	PN16g	DL16bv
76	IM6524-1IDN	256	1	S	MCG	315n	200n$	50u♦	0.0	5.0	.80	3.0	2.0m	.40		4	8	A253	DL16b
77	IM6524-1MDN	256	1	S	MCG	315n	200n$	50u♦	0.0	5.0	.80	3.0	2.0m	.40		5	C	A253	DL16b
78	IM6524IDN	256	1	S	MCG	455n	345n$	250u♦	0.0	5.0	.80	3.0	2.0m	.40		4	8	A253	DL16b
79	IM6524MDN	256	1	S	MCG	455n	345n$	250u♦	0.0	5.0	.80	3.0	2.0m	.40		5	C	A253	DL16b
80	IM6523CPE	256	1	S	MCG	800n	250n	10m♦	0.0	5.0	.80	3.0	1.0uΔ	0.0		0	7	PN16g	DL16bv
81	IM6523IDE	256	1	S	MCG	800n	800n	30m♦	0.0	5.0	.80	3.0	2.0m	.45		4	8	PN16g	DL16b
82	IM6523IPE	256	1	S	MCG	800n	800n	30m♦	0.0	5.0	.80	3.0	2.0m	.45		4	8	PN16g	DL16ao
83	IM6523MDE	256	1	S	MCG	800n	800n	30m♦	0.0	5.0	.80	3.0	2.0m	.45		5	C	PN16g	DL16b
84	IM6523MPE	256	1	S	MCG	800n	800n	30m♦	0.0	5.0	.80	3.0	2.0m	.45		5	C	PN16g	DL16ao
85	AO2	256	1	S	MCS	70n	105n	125m†	7.0	5.0	.80	3.2				0	7	A116	DL16a
86	A5503	256	1	S	MCS	80n	60n	120m†	7.0	5.0	.80	3.2§	1.6m	0.0		0	7	A120	ML140a
87	A5503FT	256	1	S	MCS	140n	100n	256m	7.0	5.0	.80	3.2				5	C		
88	WD74HC200E#ai	256	1	S	MCX	45n			0.0	5.0	0.8	2.0						74S200	DL16Ø
89	WD74HC200F#ai	256	1	S	MCX	45n			0.0	5.0	0.8	2.0						74S200	DL16Ø
90	GZF1400P	256	1	S	MCX	200n	200n	100u♦	0.0	10	3.0	7.0	1.6m	4.75		4	8	A288	DL16w
91	HD1-54C200	256	1	S	MCX	250n	80n$	500n†	0.0	10	2.0	8.0§	30m	10		5	C	A183	ML93c
92	HD1-74C200	256	1	S	MCX	250n	80n$	500n†	0.0	10	2.0	8.0§	30m	10		4	8	A183	ML93c
93	HD9-54C200	256	1	S	MCX	250n	80n$	500n†	0.0	10	2.0	8.0§	30m	10		5	C	A183	TO86
94	HD9-74C200	256	1	S	MCX	250n	80n$	500n†	0.0	10	2.0	8.0§	30m	10		4	8	A183	TO86
95	SCL5553	256	1	S	MCX	250n	200n	1.0uØ♦	0.0	15						5	C	A48	FL12
96	GZF1400	256	1	S	MCX	550n	200n		3.0	11	3.0	7.0	1.6m	.40		0	7	A171	
97	MSM4061A	256	1	S	MCX	1.5u	1.0u	50m	0.0	5.0	1.0	3.6§	1.6m	.40		2	7	40-061	DL16m
98	uPD402D	256	1	S	MNA	450n	510n	1.0m%	5.0	12	.60	2.4§	2.0m	.40		1	7	A270	ML194a
99	IM6524A-1IDE	256	1	S	MNG	135n	110n$	1.1m♦	0.0	11	2.2	7.7	1.0uΔ	0.0		4	8	A253	DL16b
100	IM6524A-1MDE	256	1	S	MNG	135n	110n$	1.1m♦	0.0	11	2.2	7.7	1.0uΔ	0.0		5	C	A253	DL16b
101	IM6524AIDE	256	1	S	MNG	190n	160n$	5.5m♦	0.0	11	2.2	7.7	1.0uΔ	0.0		4	8	A253	DL16b
102	IM6524AMDE	256	1	S	MNG	190n	160n$	5.5m♦	0.0	11	2.2	7.7	1.0uΔ	0.0		5	C	A253	DL16b
103	IM6524-1IDE	256	1	S	MNG	315n	200n$	50u♦	0.0	5.0	.80	3.0	2.0m	.40		4	8	A253	DL16b
104	IM6524-1MDE	256	1	S	MNG	315n	200n$	50u♦	0.0	5.0	.80	3.0	2.0m	.40		5	C	A253	DL16b
105	IM6524IDE	256	1	S	MNG	455n	345n$	250u♦	0.0	5.0	.80	3.0	2.0m	.40		4	8	A253	DL16b
106	IM6524MDE	256	1	S	MNG	455n	345n$	250u♦	0.0	5.0	.80	3.0	2.0m	.40		5	C	A253	DL16b
107	UA2556	256	1	S	MPA	1.0u	500n$	1.0m%†	7.0	5.0	.80	2.4	2.7mØ	.40		5	C	A1	DL16ek
108	UA2656	256	1	S	MPA	1.0u	500n$	1.0m%†	7.0	5.0	.80	2.4	2.7mØ	.40		5	C	A1	DL16ek
109	UA3556	256	1	S	MPA	1.0u	500n$	1.0m%†	7.0	5.0	.80	2.4	2.7mØ	.40		2	7	A1	DL16ek
110	UA3656	256	1	S	MPA	1.0u	500n$	1.0m%†	7.0	5.0	.80	2.4	2.7mØ	.40		2	7	A1	DL16ek

SYMBOLS AND CODES EXPLAINED IN INTERPRETER

2. READ-WRITE MEMORIES (RAMS)

IN ORDER OF (1)No.WORDS(2)No.BITS/WORD (3)MODE(4)STRUCT.(5)MAX ACC.TIME(6)TYPE No.

LINE No.	6 TYPE NUMBER	ORGANIZATION 1 NO. OF WORDS	2 BITS PER WORD	3 MODE	4 STRUC-TURE CODE	5 MAX. ACCESS TIME (S)	MAX. WRITE CYCLE TIME (S)	MAX. POWER DISS. (W)	POWER SUPPLY SPAN NEG. (V)	POS. (V)	INPUT LOGIC LEVELS MAX. '0' (V)	MIN. '1' (V)	MIN.OUTPUT SINK CURRENT (A)	@ OUT (V)	MIN. CLOCK FREQ. (Hz)	OPER TEMP RNGE CODE -	+	DRAWINGS FUNCTIONAL EQUIVALENT NUMBER	OUTLINE
1	MM1101A2D	256	1	S	MPG	500n	800n	700mØ	9.0	5.0	.80	3.0§	2.0m	.45		0	7	A102	DL16bg
2	MM1101A2N	256	1	S	MPG	500n	800n	700mØ	9.0	5.0	.80	3.0§	2.0m	.45		0	7	A102	DL16bh
3	MM4250D	256	1	S	MPG	650n	1.0u	700mØ	9.0	5.0	.80	3.0§	2.0m	.45		5	C	A102	DL16bg
4	2501I	256	1	S	MPG	800n	300n$	600mØ	9.0	5.0	.50	3.0	3.0m	.45		0	7	A74	ML171
5	IM7511CDE	256	1	S	MPG	800n	300n$	600mØ	7.0	5.0	.50	3.3	200u♦	3.5		0	7	A1	ML4b
6	2501B	256	1	S	MPG	1.0u	400n$	640mØ	9.0	5.0	.50	3.0	3.0m	.45		0	7	A74	DL16az
7	2501N	256	1	S	MPG	1.0u	400n$	640mØ	9.0	5.0	.50	3.0	3.0m	.45		0	7	A74	DL16fm
8	C1101A1	256	1	S	MPG	1.0u	800n	1.0 Ø	9.0	5.0	.50	3.0§	2.0m	.45		0	7	A1	DL16ek
9	C1101A1DM	256	1	S	MPG	1.0u	800n	700mØ	10	5.0	.50	4.0	1.8m	.45		5	C	A1	DL16ay
10	IM7511MDE	256	1	S	MPG	1.0u	300n$	500mØ	7.0	5.0	.50	3.3	200u♦	3.5		5	C	A1	ML4b
11	MF1101A1#1	256	1	S	MPG	1.0u	800n	700mØØ	9.0	5.0	.50	3.0	2.0m	.45		0	8	A1	ML2a
12	MF1101A1#2	256	1	S	MPG	1.0u	800n	700mØØ	9.0	5.0	.50	3.0	2.0m	.45		0	8	A1	DL16ek
13	ML11011	256	1	S	MPG	1.0u	400n$	2.0m%	7.0	5.0	.200†	5.0	3.0 Ø	.45		6	8	A1	DL16ek
14	MM1101A1D	256	1	S	MPG	1.0u	800n	700mØ	9.0	5.0	.80	3.0§	2.0m	.45		0	7	A102	DL16bg
15	MM1101A1N	256	1	S	MPG	1.0u	800n	700mØ	9.0	5.0	.80	3.0§	2.0m	.45		0	7	A102	DL16bh
16	MM11011D	256	1	S	MPG	1.0u	800n	700mØ	7.0	5.0	.80	3.0§	2.0m	.45		0	7	A102	DL16bg
17	MM11011N	256	1	S	MPG	1.0u	800n	700mØ	7.0	5.0	.80	3.0§	2.0m	.45		0	7	A102	DL16bh
18	MP11011	256	1	S	MPG	1.0u	800n	700m	7.0	5.0	.45	3.5	2.0m	.45		0	7	A1	DL16ek
19	P1101A1	256	1	S	MPG	1.0u	800n	700mØ	9.0	5.0	.50	4.0	2.0m	.45		0	7	A1	DL16at
20	RA9-1101A1#1	256	1	S	MPG	1.0u	800n	1.0 Ø	9.0	5.0	.50	3.0	2.0m	.45		0	7	A1	DL16ff
21	RA9-1101A1#2	256	1	S	MPG	1.0u	800n	1.0 Ø	9.0	5.0	.50	3.0	2.0m	.45		0	7	A1	
22	1101ADM	256	1	S	MPG	1.5u	800n	700mØ	9.0	5.0	.50	4.0	1.8m	.45		5	C	A1	DL16ek
23	C1101A51	256	1	S	MPG	1.5u	400n	400m	9.0	5.0	.30	4.5	2.0	.45		0	7		DLØ
24	C1101A	256	1	S	MPG	1.5u	800n	1.0 Ø	9.0	5.0	.50	3.0§	2.0m	.45		0	7	A1	DL16ek
25	C1101ADM	256	1	S	MPG	1.5u	800n	700mØ	10	5.0	.50	4.0	1.8m	.45		5	C	A1	DL16ay
26	IM7501CDE	256	1	S	MPG	1.5u	400n$	600mØ	7.0	5.0	.50	3.3	200u♦	3.5		0	7	A1	ML4b
27	IM7501MDE	256	1	S	MPG	1.5u	400n$	500mØ	7.0	5.0	.50	3.3	200u♦	3.5		5	C	A1	ML4b
28	IM7512CDE	256	1	S	MPG	1.5u	400n$	600mØ	7.0	5.0	.50	3.3	200u♦	3.5		0	7	A1	ML4b
29	M58531P	256	1	S	MPG	1.5u	800n	333mØ	9.0	5.0	.50	3.0§	2.0m	.45		1	7	A1	DL16do
30	MF1101A#1	256	1	S	MPG	1.5u	800n	700mØØ	9.0	5.0	.50	3.0	2.0m	.45		0	8	A1	ML2a
31	MF1101A#2	256	1	S	MPG	1.5u	800n	700mØØ	9.0	5.0	.50	3.0	2.0m	.45		0	8	A1	DL16ek
32	ML1101	256	1	S	MPG	1.5u	400n$	2.0m%	7.0	5.0	.200†	5.0	3.0 Ø	.45		6	8	A1	DL16ek
33	MM1101AD	256	1	S	MPG	1.5u	800n	700mØ	7.0	5.0	.80	3.0§	2.0m	.45		0	7	A102	DL16bg
34	MM1101AN	256	1	S	MPG	1.5u	800n	700mØ	9.0	5.0	.80	3.0§	2.0m	.45		0	7	A102	DL16bh
35	MM1101D	256	1	S	MPG	1.5u	800n	700mØ	9.0	5.0	.80	3.0§	2.0m	.45		0	7	A102	DL16bg
36	MM1101N	256	1	S	MPG	1.5u	800n	700mØ	7.0	5.0	.80	3.0§	2.0m	.45		0	7	A102	DL16bh
37	MP1101	256	1	S	MPG	1.5u	800n	700m	7.0	5.0	.45	3.5	2.0m	.45		0	7	A1	DL16ek
38	P1101A	256	1	S	MPG	1.5u	800n	700mØ	9.0	5.0	.50	4.0	2.0m	.45		0	7	A1	DL16ek
39	RA9-1101A#1	256	1	S	MPG	1.5u	800n	1.0 Ø	9.0	5.0	0.5	3.0	2.0m	.45		0	7	A1	DL16ff
40	RA9-1101A#2	256	1	S	MPG	1.5u	800n	1.0 Ø	9.0	5.0	0.5	3.0	2.0m	.45		0	7	A1	
41	IM7512MDE	256	1	S	MPG	1.8u	400n$	500mØ	7.0	5.0	.50	3.3	200u♦	3.5		5	C	A1	ML4b
42	MK4007-4P	256	1	S	MPI	1.0u	700n	250m	9.0	5.0	.80	-2.0§	3.0m	.40		0	7	A36	DL16i
43	MK4007P	256	1	S	MPI	1.0u	700n	250m	9.0	5.0	.80	-2.0§	3.2m	.40		0	7	A36	DL16i
44	MCS2050	256	1	S	MPN	800n		300m	9.0	5.0	.40	3.2	2.0m	.25		0	8	A85	DLØ
45	GER11011	256	1	S	MPR	1.0u	700n	40mØ	10	5.0	.45%	3.5	3.0	.45		0	8	A1	ML4
46	GER1101	256	1	S	MPR	1.5u	700n	400mØ	10	5.0	.45%	3.5	3.0	.45		0	8	A1	ML4
47	MK4001P	256	1	S	MPX	50n	30n	250m†	18	0.0	-2.0	-16	10uΔ	-16		5	8	A26	ML20
48	TMS4003JR	256	1	S	MPX	60n	30n$	500m	18	0.0	-2.0	-16				5	8	A26	DL40b
49	TMS4003NC	256	1	S	MPX	60n	30n$	500m	18	0.0	-2.0	-16				5	8	A26	ML80
50	TMS1101JC	256	1	S	MPX	750n	400n$	330m	0.0	5.0	.60♦	3.5	1.6mØ	.40		2	8	A74	DL16k
51	TMS1101NC	256	1	S	MPX	750n	400n$	330m	0.0	5.0	.60♦	3.5	1.6mØ	.40		2	8	A74	DL16ez
52	25L01B	256	1	S	MPX	1.0u	300n	1.7mØ%	12	5.0	.50	3.0	3.0mØ	.45		0	7	A265	DL16az
53	CM1101A1	256	1	S	MPX	1.0u	800n	300m	0.0	5.0	-4.5	-2.0	3.0m	.45		0	8	A21	DLØ
54	CM1101	256	1	S	MPX	1.5u	400n$	2.0m%†	7.0	5.0	.45%	3.5	3.0m	.45		6	8	A21	DLØ
55	CM1101A	256	1	S	MPX	1.5u	800n	300m	0.0	5.0	-4.5	-2.0	3.0m	.45		0	8	A21	DLØ
56	UA2512	256	2	S	MPA	1.0u	400n$	1.0m%†	7.0	5.0	.80	2.4	3.2mØ	.40		5	C	A42	FL8
57	UA3512	256	2	S	MPA	1.0u	400n$	1.0m%†	7.0	5.0	.80	2.4	3.2mØ	.40		2	7	A42	FL8
58	M58656S	256	4			1.0u	1.0u	875m	15	5.0	.80	3.25	5.0m	-.60		0	7		
59	MCM93412DC	256	4		BTX	45n	30n$	0.5 %†	0.5	5.5	0.8	2.1Δ	100uΔ	4.5		0	7	A656	DL22ad
60	MCM93412DM	256	4		BTX	45n	40n$	0.5 %†	0.5	5.5	0.8	2.1Δ	100uΔ	4.5		5	C	A656	DL22ad
61	MCM93412FM	256	4		BTX	45n	40n	0.5 %†	0.5	5.5	0.8	2.1Δ	100uΔ	4.5		5	C	A656	FL72
62	MCM93412PC	256	4		BTX	45n	30n$	0.5 %†	0.5	5.5	0.8	2.1Δ	100uΔ	4.5		0	7	A656	
63	CDP1822SD	256	4		MCS	150n		35m†	0.0	10	3.0	7.0	1.8m†	9.5		2	8	PN22e	DLØ
64	CDP1822SCD	256	4		MCS	250n		10m†	0.0	6.0	1.8	4.2	800u†	.50		2	8	PN22e	DLØ
65	MBC5101L4	256	4		MCX	650n	650n	121m	4.5	5.5	0.65	2.2	2.0m	0.4		5	C		
66	MW4101DV2	256	4		MNX	250n	300n	125m†	0.0	5.0	.60	2.4	3.2m	.40		0	7	PN22d	DLØ
67	MW4111DV2	256	4		MNX	250n		125m†	0.0	5.0	.60	2.4	3.2m	.40		0	7	PN18c	DLØ
68	MW4112DV2	256	4		MNX	250n		125m†	0.0	5.0	.60	2.4	3.2m	.40		0	7	PN16i	DLØ
69	MW4101DV1	256	4		MNX	300n	350n	125m†	0.0	5.0	.60	2.4	3.2m	.40		0	7	PN22d	DLØ
70	MW4111DV1	256	4		MNX	300n		125m†	0.0	5.0	.60	2.4	3.2m	.40		0	7	PN18c	DLØ
71	MW4112DV1	256	4		MNX	300n		125m†	0.0	5.0	.60	2.4	3.2m	.40		0	7	PN16i	DLØ
72	MW4101D	256	4		MNX	400n	400n	125m†	0.0	5.0	.60	2.4	3.2m	.40		0	7	PN22d	DLØ
73	MW4111D	256	4		MNX	400n		125m†	0.0	5.0	.60	2.4	3.2m	.40		0	7	PN18c	DLØ
74	MW4112D	256	4		MNX	400n		125m†	0.0	5.0	.60	2.4	3.2m	.40		0	7	PN16i	DLØ
75	MBM10422A7C#ai																		
		256	4	S	BEX	7.0n		1.0	5.0	0.0	-1.8	-.81				0	7	PN24ig	DL24eb
76	GXB100422AF	256	4	S	BEX	10n	8.0n$	800m%	4.5	0.0	-.80	-1.8				0	7	A517a	
77	GXB100422AN	256	4	S	BEX	10n	8.0n$	800m%	4.5	0.0	-.80	-1.8				0	7	A517a	
78	MB7071H	256	4	S	BEX	10n	8.0n$	800u%	5.2	0.0	-1.4	-1.1	30mØ			0	7	A335	ML259
79	MB7071E	256	4	S	BEX	12n	8.0n$	800u%	5.2	0.0	-1.4	-1.1	30mØ			0	7	A335	ML259
80	GXB10422AN	256	4	S	BEX	13n	8.0n$	800m%	5.2	0.0	.80	1.8				0	7	A517	
81	GXB100422F	256	4	S	BEX	15n	8.0n$	800m%	4.5	0.0	-.80	-1.8				0	7	A517a	
82	GXB100422N	256	4	S	BEX	15n	8.0n$	800m%	4.5	0.0	-.80	-1.8				0	7	A517a	
83	MB7071N	256	4	S	BEX	15n	8.0n$	800u%	5.2	0.0	-1.4	-1.1	30mØ			0	7	A335	ML259
84	MC7072NC	256	4	S	BEX	15n	10n$	4.0m	5.2	0.0	-1.4	-1.1	30mØ			2	C		DL22m
85	GXB10422F	256	4	S	BEX	18n	8.0n$	800m%	5.2	0.0	.80	1.8				0	7	A517	
86	GXB10422N	256	4	S	BEX	18n	8.0n$	800m%	5.2	0.0	.80	1.8				0	7	A517	
87	SN54S207J	256	4	S	BTD	40n	15n$	600m†	0.0	5.0	.80	2.0§	16m	.50		5	C	A277	DL16fh
88	SN54S208J	256	4	S	BTD	40n	15n$	600m†	0.0	5.0	.80	2.0§	16m	.50		5	C	A279	DL20t
89	SN74S207J	256	4	S	BTD	40n	15n$	600m†	0.0	5.0	.80	2.0§	16m	.50		0	6	A277	DL16fh
90	SN74S207N	256	4	S	BTD	40n	15n$	600m†	0.0	5.0	.80	2.0§	16m	.50		0	6	A277	DL16ey
91	SN74S208J	256	4	S	BTD	40n	15n$	600m†	0.0	5.0	.80	2.0§	16m	.50		0	6	A279	DL20t
92	SN74S208N	256	4	S	BTD	40n	15n$	600m†	0.0	5.0	.80	2.0§	16m	.50		0	6	A279	DL20w
93	SN54LS207J	256	4	S	BTD	75n	25n$	200m†	0.0	5.0	.80	2.0§	16m	.50		5	C	A277	DL16fh
94	SN54LS208J	256	4	S	BTD	75n	25n$	200m†	0.0	5.0	.80	2.0§	16m	.50		5	C	A279	DL20t
95	SN74LS207J	256	4	S	BTD	75n	25n$	200m†	0.0	5.0	.80	2.0§	16m	.50		0	6	A277	DL16fh
96	SN74LS207N	256	4	S	BTD	75n	25n$	200m†	0.0	5.0	.80	2.0§	16m	.50		0	6	A277	DL16ey
97	SN74LS208J	256	4	S	BTD	75n	25n$	200m†	0.0	5.0	.80	2.0§	16m	.50		0	6	A279	DL20t
98	SN74LS208N	256	4	S	BTD	75n	25n$	200m†	0.0	5.0	.80	2.0§	16m	.50		0	6	A279	DL20w
99	MBM100422TF	256	4	S	BTX	10n		700u	4.5	0.0	-1.8	-.88				0	8	A517a	FL48
100	IM5543CDE	256	4	S	BTX	40n	45n	600m	0.0	5.0	.80	2.0	16m	.45		0	7	A30	DL16a
101	IM5553CDE	256	4	S	BTX	40n	45n	600m	0.0	5.0	.80	2.0	16m	.45		0	7	A30	DL16a
102	IM5563CDE	256	4	S	BTX	40n	45n	600m	0.0	5.0	.80	2.0	16m	.45		0	7	A30	DL16a
103	93412DC	256	4	S	BTX	45n	30n$	775m	0.0	5.0	.80	2.1	8.0m	.45		0	7	A233	DL22b
104	93412FC	256	4	S	BTX	45n	30n$	775m	0.0	5.0	.80	2.1Δ	8.0m	.45		0	7	A233	FL3c
105	93L412DC	256	4	S	BTX	60n	45n$	325m	0.0	5.0	.80	2.1Δ	8.0m	.45		0	7	A233	DL22b
106	93L412FC	256	4	S	BTX	60n	45n$	400m	0.0	5.0	.80	2.1Δ	8.0m	.45		0	7	A233	FL3c
107	93412DM	256	4	S	BTX	60n	40n$	850m	0.0	5.0	.80	2.1	8.0m	.45		5	C	A233	DL22b
108	93412FM	256	4	S	BTX	60n	40n$	850m	0.0	5.0	.80	2.1Δ	8.0m	.45		5	C	A233	FL3c
109	93L412DM	256	4	S	BTX	75n	55n$	375m	0.0	5.0	.80	2.1Δ	8.0m	.45		5	C	A233	DL22b

SYMBOLS AND CODES EXPLAINED IN INTERPRETER

2. READ-WRITE MEMORIES (RAMS)

IN ORDER OF (1)No.WORDS(2)No.BITS/WORD (3)MODE(4)STRUCT.(5)MAX ACC.TIME(6)TYPE No.

MEMORY

LINE No.	6 TYPE NUMBER	ORGANIZATION 1 NO. OF WORDS	2 BITS PER WORD	3 MODE	4 STRUCTURE CODE	5 MAX. ACCESS TIME (S)	MAX. WRITE CYCLE TIME (S)	MAX. POWER DISS. (W)	POWER SUPPLY SPAN NEG. (V)	POS. (V)	INPUT LOGIC LEVELS MAX. '0' (V)	MIN. '1' (V)	MIN.OUTPUT SINK CURRENT (A)	@ OUT (V)	MIN. CLOCK FREQ. (Hz)	OPER TEMP RNGE CODE -	+	DRAWINGS FUNCTIONAL EQUIVALENT NUMBER	OUTLINE
1	93L412FM	256	4	S	BTX	75n	55n$	375m	0.0	5.0	.80	2.1Δ	8.0m	.45		5	C	A233	FL3c
2	RAM18A#4	256	4	S	BTX	180n	200n	2.2 †	5.0	5.0	.80	2.0	20m	.40		1	8	A58	PL3
3	RAM218A#4	256	4	S	BTX	180n	155n	2.2 †	5.0	5.0	.80	2.0	30m∅			1	8	A58a	PL3
4	HM1-6501D5	256	4	S	MCG			4.0m♦	0.0	5.0	.80	3.0§	2.0m	.40		0	7	A257	ML8h
5	HM1-6551D5	256	4	S	MCG			4.0m♦	0.0	5.0	.80	3.0§	2.0m	.40		0	7	A259	ML8h
6	HM1-6561D5	256	4	S	MCG			4.0m♦	0.0	5.0	.80	3.0§	2.0m	.40		0	7	A260	ML115b
7	HM1-6562D5	256	4	S	MCG			4.0m♦	0.0	5.0	.80	3.0	2.0m	.40		0	7	A261	DL16aa
8	HM6501-9	256	4	S	MCG			20m	0.0	5.0	.80	3.0				4	8	A399	
9	HM6501B9	256	4	S	MCG			20m	0.0	5.0	.80	3.0				4	8	A399	
10	HM6551-9	256	4	S	MCG			20m	0.0	5.0	.80	3.0				4	8	A408	
11	HM6551B9	256	4	S	MCG			20m	0.0	5.0	.80	3.0				4	8	A408	
12	HM6561-9	256	4	S	MCG			20m	0.0	5.0	.80	3.0				4	8	A409	
13	HM6561B9	256	4	S	MCG			20m	0.0	5.0	.80	3.0				4	8	A372	
14	HM6562-9	256	4	S	MCG				0.0	5.0	.80	3.0				4	8	A410	
15	HM6562B9	256	4	S	MCG				0.0	5.0	.80	3.0				4	8	A410	
16	HM1-6501B2	256	4	S	MCG	170n	240n	50u♦	0.0	5.0	.80	3.0§	3.2m	.40		5	C	A399	
17	HM1-6501B9	256	4	S	MCG	170n	240n	50u♦	0.0	5.0	.80	3.0§	3.2m	.40		4	8	A399	
18	HM1-6562B2	256	4	S	MCG	170n	320nΔ	50u♦	.3	8.0	.80	3.0§	3.2m	.40		5	C	A714	DL16hp
19	HM3-6501B2	256	4	S	MCG	170n	240n	50u♦	0.0	5.0	.80	3.0§	3.2m	.40		5	C	A399	
20	HM3-6501B9	256	4	S	MCG	170n	240	50u♦	0.0	5.0	.80	3.0§	3.2m	.40		4	8	A399	
21	HM3-6562B2	256	4	S	MCG	170n	320nΔ	50u♦	.3	8.0	.80	3.0§	3.2m	.40		5	C	A714	DL16hq
22	HM9-6501B2	256	4	S	MCG	170n	240	50u♦	0.0	5.0	.80	3.0§	3.2m	.40		5	C	A399	FL57
23	HM9-6501B9	256	4	S	MCG	170n	240	50u♦	0.0	5.0	.80	3.0§	3.2m	.40		4	8	A399	FL57
24	HM9-6562B2	256	4	S	MCG	170n	320nΔ	50u♦	.3	8.0	.80	3.0§	3.2m	.40		5	C	A714	FL54
25	IM6551AIDF	256	4	S	MCG	180n		5.0u†♦	0.0	11	.80	9.0§	1.0uΔ			4	8	A297	DL22o
26	IM6551AIJF	256	4	S	MCG	180n		5.0u†♦	0.0	11	.80	9.0§	1.0uΔ			4	8	A297	DL22ae
27	IM6551AMDF	256	4	S	MCG	180n		5.0u†♦	0.0	11	.80	9.0§	1.0uΔ			5	C	A297	DL22o
28	IM6551AMJF	256	4	S	MCG	180n		5.0u†♦	0.0	11	.80	9.0§	1.0uΔ			5	C	A297	DL22ae
29	HM3-6501-2	256	4	S	MCG	240n	310n	50u♦	0.0	5.0	.80	3.0§	3.2m	.40		5	C	A399	
30	HM3-6562-2	256	4	S	MCG	240n	310n	50u♦	0.0	5.0	.80	3.0§	3.2m	.40		5	C	A410	DL16dk
31	D2112A2	256	4	S	MCG	250n	200n	1.0 ∅	0.0	5.0	.80	2.0§	2.0m	.45		0	8	A201	DL16dd
32	HM9-6501-5	256	4	S	MCG	310n	430n	500u♦	0.0	5.0	.80	3.0§	1.6m	.40		0	7	A399	FL57
33	HM9-6562-5	256	4	S	MCG	310n	330n	500u♦	0.0	5.0	.80	3.0§	1.6m	.40		0	7	A410	FL54
34	IM6551A-IDF	256	4	S	MCG	350n	95n$	5.0m	0.0	10	2.0	7.0	1.0uΔ			4	8	A297	ML8v
35	IM6551A-MDF	256	4	S	MCG	350n	95n$	5.0m	0.0	10	2.0	7.0	1.0uΔ			5	C	A297	ML8v
36	IM6561A-IDN	256	4	S	MCG	350n	95n$	5.0m	0.0	10	2.0	7.0	1.0uΔ			4	8	A298	DL18ac
37	IM6561A-MDN	256	4	S	MCG	350n	95n$	5.0m	0.0	10	2.0	7.0	1.0uΔ			5	C	A298	DL18ac
38	IM6551IDF	256	4	S	MCG	360n		5.0u†♦	0.0	5.0	.80	3.0§	1.0uΔ			4	8	A297	DL22o
39	IM6551IJF	256	4	S	MCG	360n		5.0u†♦	0.0	5.0	.80	3.0§	1.0uΔ			4	8	A297	DL22ae
40	IM6551MJF	256	4	S	MCG	360n		5.0u†♦	0.0	5.0	.80	3.0§	1.0uΔ			5	C	A297	DL22ae
41	IM6551MPF	256	4	S	MCG	360n		5.0u†♦	0.0	5.0	.80	3.0§	1.0uΔ			5	C	A297	DL22af
42	C5101-1	256	4	S	MCG∅	450n	450n	1.0 ∅	0.0	5.0	.65	2.2§	2.0m	.40		0	8	A267	DL22c
43	C5101L-1	256	4	S	MCG	450n	450n	135m	0.0	5.0	.65	2.2§	2.0m	.40		0	7	A300	DL24ed
44	D2112A4	256	4	S	MCG	450n	320n	1.0 ∅	0.0	5.0	.80	2.0§	2.0m	.45		0	8	A201	DL16dd
45	HM435101P-1	256	4	S	MCG	450n		1.0 ∅	0.0	5.0	.65	2.2§	2.0m	.40		0	7	A267a	ML212d
46	IM6551CJF	256	4	S	MCG	450n		5.0u†♦	0.0	5.0	.80	3.0§	5.0uΔ			0	7	A297	DL22ae
47	IM6551CPF	256	4	S	MCG	450n		5.0u†♦	0.0	5.0	.80	3.0§	5.0uΔ			0	7	A297	DL22af
48	M5L5101P-1	256	4	S	MCG	450n	450n	75m†	0.0	5.0	.65	2.2§	2.0m	.45		0	6	A196	DL22ah
49	MCM145101-1L	256	4	S	MCG	450n	450n	135m	0.0	5.0	.65	2.2§	2.0m	.40		0	7	45-101	DL24dq
50	MCM145101-1P	256	4	S	MCG	450n	450n	135m	0.0	5.0	.65	2.2§	2.0m	.40		0	7	45-101	DL22aj
51	P5101-1	256	4	S	MCG∅	450n	450n	1.0 ∅	0.0	5.0	.65	2.2§	2.0m	.40		0	8	A267	DL22aa
52	P5101L-1	256	4	S	MCG	450n	450n	135m	0.0	5.0	.65	2.2§	2.0m	.40		0	7	A300	DL24ct
53	P5101L-3	256	4	S	MCG	450n	650n	135m	0.0	5.0	.65	2.2§	2.0m	.40		0	7	A300	DL24ct
54	S5101L1-1C	256	4	S	MCG	450n	450n	110m†	0.0	5.0		§						A196	ML77c
55	S5101L1-2C	256	4	S	MCG	450n	450n	110m†	0.0	5.0		§						A196	ML77d
56	S5101L2-1C	256	4	S	MCG	450n	450n	110m†	0.0	5.0		§						A196	ML77c
57	S5101L2-2C	256	4	S	MCG	450n	450n	110m†	0.0	5.0		§						A196	ML77d
58	S5101L-2C	256	4	S	MCG	450n	450n	110m†	0.0	5.0		§						A196	ML77d
59	S51011-1C	256	4	S	MCG	450n	450n	110m†	0.0	5.0		§						A196	ML77c
60	S51011-2C	256	4	S	MCG	450n	450n	110m†	0.0	5.0		§						A196	ML77d
61	S51012-1C	256	4	S	MCG	450n	450n	110m†	0.0	5.0		§						A196	ML77c
62	S51012-2C	256	4	S	MCG	450n	450n	110m†	0.0	5.0		§						A196	ML77d
63	uPD5101C-E	256	4	S	MCG∅	450n	450n	1.0 ∅	0.0	5.0	.65	2.2§	1.0uΔ	5.0		0	6		
64	IM6551-IDF	256	4	S	MCG	460n	270n$	500u	0.0	5.0	.80	3.0	2.0m	.45		4	8	A297	ML8v
65	IM6551-MDF	256	4	S	MCG	460n	270n$	500u	0.0	5.0	.80	3.0	2.0m	.45		5	C	A297	ML8v
66	IM6561-IDN	256	4	S	MCG	460n	270n$	500u	0.0	5.0	.80	3.0	2.0m	.45		4	8	A298	DL18ac
67	IM6561-MDN	256	4	S	MCG	460n	270n$	500u	0.0	5.0	.80	3.0	2.0m	.45		5	C	A298	DL18ac
68	C5101	256	4	S	MCG	650n	650n	142m	0.0	5.0	.65	2.2§	2.0m	.40		0	7	A196	DL22c
69	C5101-3	256	4	S	MCG	650n	650n	142m	0.0	5.0	.65	2.2§	2.0m	.40		0	7	A196	DL22c
70	C5101L3	256	4	S	MCG	650n	650n	142m	0.0	5.0	.65	2.2§	2.0m	.40		0	7	A196	DL22c
71	C5101L	256	4	S	MCG	650n	650n	142m	0.0	5.0	.65	2.2§	2.0m	.40		0	7	A196	DL22n
72	C5101L-3	256	4	S	MCG	650n	650n	135m	0.0	5.0	.65	2.2§	2.0m	.40		0	7	A300	DL24ed
73	HM435101P	256	4	S	MCG	650n		1.0 ∅	0.0	5.0	.65	2.2§	2.0m	.40		0	7	A267a	ML212d
74	HM435101V	256	4	S	MCG	650n	650n	1.0 ∅	0.0	5.0	.80	2.2§	1.0uΔ	5.0		2	7	A267a	DL16ac
75	HM435101VP	256	4	S	MCG	650n		1.0 ∅	0.0	5.0	.65	2.2§	2.0m	.40		2	7	A267a	ML212d
76	MCM145101-3L	256	4	S	MCG	650n	650n	135m	0.0	5.0	.65	2.2§	2.0m	.40		0	7	45-101	DL24dq
77	MCM145101-3P	256	4	S	MCG	650n	650n	135m	0.0	5.0	.65	2.2§	2.0m	.40		0	7	45-101	DL22aj
78	MCM145101L	256	4	S	MCG	650n	650n	135m	0.0	5.0	.65	2.2§	2.0m	.40		0	7	45-101	DL24dq
79	MCM145101P	256	4	S	MCG	650n	650n	135m	0.0	5.0	.65	2.2§	2.0m	.40		0	7	45-101	DL22aj
80	P5101	256	4	S	MCG	650n	650n	142m	0.0	5.0	.65	2.2§	2.0m	.40		0	7	A196	DL22d
81	P5101-3	256	4	S	MCG	650n	650n	142m	0.0	5.0	.65	2.2§	2.0m	.40		0	7	A196	DL22d
82	P5101L3	256	4	S	MCG	650n	650n	142m	0.0	5.0	.65	2.2§	2.0m	.40		0	7	A196	DL22d
83	P5101L	256	4	S	MCG	650n	650n	142m	0.0	5.0	.65	2.2§	2.0m	.40		0	7	A196	DL18bi
84	S5101-1C	256	4	S	MCG	650n	650n	110m†	0.0	5.0		§						A196	ML77c
85	S5101-2C	256	4	S	MCG	650n	650n	110m†	0.0	5.0		§						A196	ML77d
86	S5101L3-1C	256	4	S	MCG	650n	650n	110m†	0.0	5.0		§						A196	ML77c
87	S5101L3-2C	256	4	S	MCG	650n	650n	110m†	0.0	5.0		§						A196	ML77d
88	S5101L3C	256	4	S	MCG	650n	650n	1.0	0.0	5.0	0.65	2.2				0	6	A559	DL22ay
89	S5101L3CI	256	4	S	MCG	650n	650n	1.0	0.0	5.0	0.65	2.2				3	8	A559	DL22ay
90	S5101L3CM	256	4	S	MCG	650n	650n	1.0	0.0	5.0	0.65	2.2				5	C	A559	DL22ay
91	S5101L3E	256	4	S	MCG	650n	650n	1.0	0.0	5.0	0.65	2.2				0	6	A559	DL22ax
92	S5101L3EI	256	4	S	MCG	650n	650n	1.0	0.0	5.0	0.65	2.2				3	8	A559	DL22ax
93	S5101L3P	256	4	S	MCG	650n	650n	1.0	0.0	5.0	0.65	2.2				0	6	A559	DL22aw
94	S5101L3PI	256	4	S	MCG	650n	650n	1.0	0.0	5.0	0.65	2.2				3	8	A559	DL22aw
95	S5101L-1C	256	4	S	MCG	650n	650n	110m†	0.0	5.0		§						A196	ML77c
96	S6501L3	256	4	S	MCG	650n	650n	1.0 ∅	0.0	5.0	.65	2.2	2.0m	0.4		1	8	A559	DL22∅
97	S6501L3C	256	4	S	MCG	650n	650n	1.0	0.0	5.0	0.65	2.2				0	7	A559	DL22ay
98	S6501L3D	256	4	S	MCG	650n	650n	1.0	0.0	5.0	0.65	2.2				0	7	A559	DL22ax
99	S6501L3P	256	4	S	MCG	650n	650n	1.0	0.0	5.0	0.65	2.2				0	7	A559	DL22aw
100	S51013-1C	256	4	S	MCG	650n	650n	110m†	0.0	5.0		§						A196	ML77c
101	S51013-2C	256	4	S	MCG	650n	650n	110m†	0.0	5.0		§						A196	ML77d
102	C5101-8	256	4	S	MCG∅	800n	800n	1.0 ∅	0.0	5.0	.65	2.2§	2.0m	.40		0	8	A267	DL22c
103	MC5101-4	256	4	S	MCG	800n	800n	1.0 ∅	0.0	5.0	.50	3.0§	2.0m	.40		5	C	PN22f	DL22e
104	MC5101L-4	256	4	S	MCG	800n	800n	1.0 ∅	0.0	5.0	.50	3.0§	2.0m	.40		5	C	PN22f	DL22e
105	MCM145101-8L	256	4	S	MCG	800n	800n	150m	0.0	5.0	.65	2.2§	2.0m	.40		0	7	45-101	DL24dq
106	MCM145101-8P	256	4	S	MCG	800n	800n	150m	0.0	5.0	.65	2.2§	2.0m	.40		0	7	45-101	DL22aj
107	MN5101	256	4	S	MCG	800n	800n	75m	0.0	5.0	.65	2.2				1	8	A300	DL22t
108	P5101-8	256	4	S	MCG∅	800n	800n	1.0 ∅	0.0	5.0	.65	2.2§	2.0m	.40		0	8	A267	DL22aa
109	S5101-8C	256	4	S	MCG	800n	800n	1.0	0.0	5.0	0.65	2.2				0	6	A559	DL22ay
110	S5101-8E	256	4	S	MCG	800n	800n	1.0	0.0	5.0	0.65	2.2				0	6	A559	DL22ax

SYMBOLS AND CODES EXPLAINED IN INTERPRETER

2. READ-WRITE MEMORIES (RAMS)

IN ORDER OF (1)No.WORDS(2)No.BITS/WORD (3)MODE(4)STRUCT.(5)MAX ACC.TIME(6)TYPE No.

LINE No.	6 TYPE NUMBER	ORGANIZATION 1 NO. OF WORDS	2 BITS PER WORD	3 MODE	4 STRUCT-URE CODE	5 MAX. ACCESS TIME (S)	MAX. WRITE CYCLE TIME (S)	MAX. POWER DISS. (W)	POWER SUPPLY SPAN NEG. (V)	POWER SUPPLY SPAN POS. (V)	INPUT LOGIC LEVELS MAX. '0' (V)	INPUT LOGIC LEVELS MIN. '1' (V)	MIN.OUTPUT SINK CURRENT (A)	MIN.OUTPUT SINK CURRENT @ OUT (V)	MIN. CLOCK FREQ. (Hz)	OPER TEMP RNGE CODE -	OPER TEMP RNGE CODE +	DRAWINGS FUNCTIONAL EQUIVALENT NUMBER	DRAWINGS OUTLINE
1	S5101-8P	256	4	S	MCG	800n	800n	1.0	0.0	5.0	0.65	2.2				0	6	A559	DL22aw
2	S5101L8C	256	4	S	MCG	800n	800n	1.0	0.0	5.0	0.65	2.2				0	6	A559	DL22ay
3	S5101L8E	256	4	S	MCG	800n	800n	1.0	0.0	5.0	0.65	2.2				0	6	A559	DL22ax
4	S5101L8P	256	4	S	MCG	800n	800n	1.0	0.0	5.0	0.65	2.2				0	6	A559	DL22aw
5	S6501-8	256	4	S	MCG	800n	800n	1.0 ∅	0.0	5.0	.65	2.2	2.0m	0.4		1	8	A559	DL22∅
6	S6501-8C	256	4	S	MCG	800n	800n	1.0	0.0	5.0	0.65	2.2				0	7	A559	DL22ay
7	S6501-8D	256	4	S	MCG	800n	800n	1.0	0.0	5.0	0.65	2.2				0	7	A559	DL22ax
8	S6501-8P	256	4	S	MCG	800n	800n	1.0	0.0	5.0	0.65	2.2				0	7	A559	DL22aw
9	S6501L8	256	4	S	MCG	800n	800n	1.0 ∅	0.0	5.0	.65	2.2	2.0m	0.4		1	8	A559	DL22∅
10	S6501L8C	256	4	S	MCG	800n	800n	1.0	0.0	5.0	0.65	2.2				0	7	A559	DL22ay
11	S6501L8D	256	4	S	MCG	800n	800n	1.0	0.0	5.0	0.65	2.2				0	7	A559	DL22ax
12	S6501L8P	256	4	S	MCG	800n	800n	1.0	0.0	5.0	0.65	2.2				0	7	A559	DL22aw
13	S51018-1C	256	4	S	MCG	800n	800n	110m†	0.0	5.0		§						A196	ML77c
14	S51018-2C	256	4	S	MCG	800n	800n	110m†	0.0	5.0		§						A196	ML77d
15	SYC5101L-1	256	4	S	MCI	450n	450n	1.0 ∅	0.0	5.0	.65	2.2§	2.0m	.40		0	7	A196	ML162a
16	SYP5101L-1	256	4	S	MCI	450n	450n	1.0 ∅	0.0	5.0	.65	2.2§	2.0m	.40		0	7	A196	DL22aa
17	SYC5101L	256	4	S	MCI	650n	650n	1.0 ∅	0.0	5.0	.65	2.2§	2.0m	.40		0	7	A196	ML162a
18	SYC5101L-3	256	4	S	MCI	650n	650n	1.0 ∅	0.0	5.0	.65	2.2§	2.0m	.40		0	7	A196	ML162a
19	SYP5101L	256	4	S	MCI	650n	650n	1.0 ∅	0.0	5.0	.65	2.2§	2.0m	.40		0	7	A196	DL22aa
20	SYP5101L-3	256	4	S	MCI	650n	650n	1.0 ∅	0.0	5.0	.65	2.2§	2.0m	.40		0	7	A196	DL22aa
21	SYC5101-8	256	4	S	MCI	800n	800n	1.0 ∅	0.0	5.0	.65	2.2§	2.0m	.40		0	7	A196	ML162a
22	SYP5101-8	256	4	S	MCI	800n	800n	1.0 ∅	0.0	5.0	.65	2.2§	2.0m	.40		0	7	A196	DL22aa
23	MWS5540D	256	4	S	MCS	90n	90n	5.0m♦	0.0	10	.10%	9.9	4.0m	.40		4	8	A252	ML8s
24	MWS5540H	256	4	S	MCS	90n	90n	5.0m♦	0.0	10	.10%	9.9	4.0m	.40		4	8	A252	CH∅
25	MWS5040D	256	4	S	MCS	150n	150n	5.0m♦	0.0	5.0	.10%	4.9	4.0m†	.40		4	8	A252	ML8s
26	MWS5040H	256	4	S	MCS	150n	150n	5.0m♦	0.0	5.0	.10%	4.9	4.0m†	.40		4	8	A252	CH∅
27	CDP1822DL1	256	4	S	MCX	250n	250n	500u♦	0.0	10	2.0	8.0	9.0m	.50		0	7	PN22e	ML8s
28	CDP1822DL3	256	4	S	MCX	250n	250n	2.0m♦	0.0	10	2.0	8.0	9.0m	.50		0	7	PN22e	ML8s
29	CDP1822DL8	256	4	S	MCX	250n	250n	5.0m♦	0.0	10	2.0	8.0	9.0m	.50		0	7	PN22e	ML8s
30	MWS5101DL1	256	4	S	MCX	250n	300n	50u♦	0.0	5.0	1.5	3.5§	2.0m	.40		0	7	A398	DL22k
31	MWS5101EL1	256	4	S	MCX	250n	300n	50u♦	0.0	5.0	1.5	3.5§	2.0m	.40		0	7	A398	DL22u
32	M58480P	256	4	S	MCX	300n	300n	75m	0.0	5.0	.60	2.2	2.4m	.40		0	7		
33	SCM5101C	256	4	S	MCX	350n	450n	40m†	0.0	5.0	1.5	3.5	2.2m	5.0		5	C		DL∅
34	4721BDC	256	4	S	MCX	420n	180n$	1.3m♦	0.0	5.0	1.5	3.5§	400u	.40		4	8	A342	DL22s
35	4721BDM	256	4	S	MCX	420n	180n$	1.3m♦	0.0	5.0	1.5	3.5§	400u	.40		5	C	A342	DL22s
36	4721BFC	256	4	S	MCX	420n	180n$	1.3m♦	0.0	5.0	1.5	3.5§	400u	.40		4	8	A342a	FL47
37	4721BFM	256	4	S	MCX	420n	180n$	1.3m♦	0.0	5.0	1.5	3.5§	400u	.40		5	C	A342a	FL47
38	4721BPC	256	4	S	MCX	420n	180n$	1.3m♦	0.0	5.0	1.5	3.5§	400u	.40		4	8	A342	DL22ac
39	MWS5101DL8	256	4	S	MCX	450n	500n	2.5m♦	0.0	5.0	1.5	3.5§	2.0m	.40		0	7	A398	DL22k
40	MWS5101EL8	256	4	S	MCX	450n	500n	2.5m♦	0.0	5.0	1.5	3.5§	2.0m	.40		0	7	A398	DL22u
41	S5101-1	256	4	S	MCX	450n	450n	50u♦	0.0	5.0	.65	2.2§	2.0m	.40		0	7	A300	DL22g
42	uPD5101LC1	256	4	S	MCX	450n	450n	135m	0.0	5.0	.65	2.2§	2.0m	.40		0	7	A267	ML197a
43	SCP1822LC	256	4	S	MCX	600n	500n	40m†	0.0	5.0	1.5	3.5	2.2m	5.0		5	C	PN22e	DL∅
44	MSM573A	256	4	S	MCX	650n	850n	50m	0.0	5.0	.80	3.6§	1.6m	.40		2	7	A346	DL22a
45	PCD5101A	256	4	S	MCX	650n	300n$		0.3	8.0	0.65	2.2§	2.0m	0.20		2	7	A267	DL22be
46	PCD5101A-S1	256	4	S	MCX	650n	300n$		0.3	8.0	0.65	2.2§	2.0m	0.40		2	7	A267	DL22be
47	S5101	256	4	S	MCX	650n	650n	50u♦	0.0	5.0	.65	2.2§	2.0m	.40		0	7	A300	DL22g
48	S5101-3	256	4	S	MCX	650n	650n	7.0m♦	0.0	5.0	.65	2.2§	2.0m	.40		0	7	A300	DL22g
49	S5101L3	256	4	S	MCX	650n	650n	110m	0.0	5.0	.65	2.2§	2.0m	.40		0	7	A300	DL22g
50	S5101-8	256	4	S	MCX	800n	800n	2.5m♦	0.0	5.0	.65	2.2§	2.0m	.40		0	7	A300	DL22g
51	S5101L8	256	4	S	MCX	800n	800n	110m	0.0	5.0	.65	2.2§	2.0m	.40		0	7	A300	DL22g
52	uPD5101-E	256	4	S	MCX	800n	800n	135m	0.0	5.0	.65	2.2§	2.0m	.40		0	7	A267	DL22ab
53	uPD5101CE	256	4	S	MCX	800n	800n	135m	0.0	5.0	.65	2.2§	2.0m	.40		0	7	A267	ML197a
54	uPD5101E	256	4	S	MCX	800n	800n	135m	0.0	5.0	.65	2.2§	2.0m	.40		0	7	A267	DL∅
55	HEF4721	256	4	S	MCX	650		65m								0	7		
56	MW7040D	256	4	S	MNA	200n	350n	650m	5.0	12	.80	3.0§				0	7	A250	ML8s
57	AM9101EDC	256	4	S	MNG		200n△	275m	0.0	5.0	.80	2.0				0	7		
58	AM9101EPC	256	4	S	MNG		200n△	275m	0.0	5.0	.80	2.0				0	7		
59	AM9111EDC	256	4	S	MNG		200n△	275m	0.0	5.0	.80	2.0				0	7		
60	AM9111EPC	256	4	S	MNG		200n△		0.0	5.0	.80	2.0				0	7		
61	AM9112EDC	256	4	S	MNG		200n△	290m	0.0	5.0	.80	2.0				0	7		
62	AM9112EPC	256	4	S	MNG		200n△	290m	0.0	5.0	.80	2.0				0	7		
63	AM9101	256	4	S	MNG	175n		125m†	0.0	5.0	.80	2.0	3.2m	.40				A196	DL∅
64	AM9111	256	4	S	MNG	175n		125m†	0.0	5.0	.80	2.0	3.2m	.40				A200	DL∅
65	AM9112	256	4	S	MNG	175n		125m†	0.0	5.0	.80	2.0	3.2m	.40				A201	DL∅
66	C2101A2	256	4	S	MNG	250n	170n	1.0 ∅	0.0	5.0	.80	2.0§	2.0m	.45		0	7	A196	ML162a
67	C2101A-2	256	4	S	MNG	250n		325m	0.0	5.0	.80	2.0§	2.0m	.45		0	7	A438	DL22n
68	C2111A-2	256	4	S	MNG	250n		325m	0.0	5.0	.80	2.0§	2.0m	.45		0	7	A200	DL18am
69	C2112A-2	256	4	S	MNG	250n		325m	0.0	5.0	.80	2.0§	2.0m	.45		0	7	A201	DL16ah
70	D2101A-2	256	4	S	MNG	250n	170n	325m	0.0	5.0	.80	2.0§	2.0m	.45		0	7	A438	DL22ai
71	D2111A2	256	4	S	MNG	250n	170n	1.0 ∅	0.0	5.0	.80	2.0§	2.0m	.45		0	7	A200	ML231
72	D2111A-2	256	4	S	MNG	250n	170n	325m	0.0	5.0	.80	2.0§	2.0m	.45		0	7	A200	DL18bh
73	D2112A-2	256	4	S	MNG	250n	170n	325m	0.0	5.0	.80	2.0§	2.0m	.45		0	7	A201	DL16dq
74	M5L2101AP2	256	4	S	MNG	250n	250n	200m†	0.0	5.0						0	7		DL∅
75	M5L2101AS2	256	4	S	MNG	250n	250n	200m†	0.0	5.0						0	7		DL∅
76	M5L2111AP2	256	4	S	MNG	250n	250n	200m†	0.0	5.0						0	7		DL∅
77	M5L2111AS2	256	4	S	MNG	250n	250n	200m†	0.0	5.0						0	7		DL∅
78	M5L2112AP2	256	4	S	MNG	250n	250n	200m†	0.0	5.0						0	7		DL∅
79	M5L2112AS2	256	4	S	MNG	250n	250n	200m†	0.0	5.0						0	7		DL∅
80	MB8101E	256	4	S	MNG	250n	170n	1.0 ∅	0.0	5.0	.65	2.2§	2.0m	.45		0	7	A196	ML204
81	MB8111E	256	4	S	MNG	250n	170n	1.0 ∅	0.0	5.0	.65	2.2§	2.0m	.45		0	7	A200	ML134b
82	MB8112E	256	4	S	MNG	250n	200n	1.0 ∅	0.0	5.0	.65	2.2§	2.0m	.45		0	7	A201	DL16g
83	MM2112AJ-2	256	4	S	MNG	250n	320n	250m	0.0	5.0	.65	2.0§	3.2m	.40		0	7	A201	DL16cr
84	MM2112AN-2	256	4	S	MNG	250n	320n	250m	0.0	5.0	.65	2.0§	3.2m	.40		0	7	A201	DL16bh
85	P2101A2	256	4	S	MNG	250n	170n	1.0 ∅	0.0	5.0	.80	2.0§	2.0m	.45		0	7	A196	DL22aa
86	P2101A-2	256	4	S	MNG	250n	170n	325m	0.0	5.0	.80	2.0§	2.0m	.45		0	7	A438	DL22ao
87	P2111A2	256	4	S	MNG	250n	170n	1.0 ∅	0.0	5.0	.80	2.0§	2.0m	.45		0	7	A200	DL18a
88	P2111A-2	256	4	S	MNG	250n	170n	325m	0.0	5.0	.80	2.0§	2.0m	.45		0	7	A200	DL18bi
89	P2112A2	256	4	S	MNG	250n	200n	1.0 ∅	0.0	5.0	.80	2.0§	2.0m	.45		0	8	A201	DL16bw
90	P2112A-2	256	4	S	MNG	250n	170n	325m	0.0	5.0	.80	2.0§	2.0m	.45		0	7	A201	DL16dr
91	C2101A	256	4	S	MNG	350n		275m	0.0	5.0	.80	2.0§	2.0m	.45		0	7	A438	DL22n
92	C2111A	256	4	S	MNG	350n		275m	0.0	5.0	.80	2.0§	2.0m	.45		0	7	A200	DL18am
93	C2112A	256	4	S	MNG	350n		275m	0.0	5.0	.80	2.0§	2.0m	.45		0	7	A201	DL16ah
94	D2101A	256	4	S	MNG	350n	220n	275m	0.0	5.0	.80	2.0§	2.0m	.45		0	7	A438	DL22ai
95	D2111A	256	4	S	MNG	350n	220n	275m	0.0	5.0	.80	2.0§	2.0m	.45		0	7	A200	DL18bh
96	D2112A	256	4	S	MNG	350n	220n	275m	0.0	5.0	.80	2.0§	2.0m	.45		0	7	A200	DL18bh
97	M5L2101AP	256	4	S	MNG	350n	350n	175m†	0.0	5.0						0	7		DL∅
98	M5L2101AS	256	4	S	MNG	350n	350n	175m†	0.0	5.0						0	7		DL∅
99	M5L2111AP	256	4	S	MNG	350n	350n	175m	0.0	5.0						0	7		DL∅
100	M5L2111AS	256	4	S	MNG	350n	350n	175m	0.0	5.0						0	7		DL∅
101	M5L2112AP	256	4	S	MNG	350n	350n	175m†	0.0	5.0						0	7		DL∅
102	M5L2112AS	256	4	S	MNG	350n	350n	175m†	0.0	5.0						0	7		DL∅
103	MM2112AJ	256	4	S	MNG	350n	470n	250m	0.0	5.0	.65	2.0§	3.2m	.40		0	7	A201	DL16cr
104	MM2112AJ-L	256	4	S	MNG	350n	470n	195m	0.0	5.0	.65	2.0§	3.2m	.40		0	7	A201	DL16cr
105	MM2112AN	256	4	S	MNG	350n	470n	250m	0.0	5.0	.65	2.0§	3.2m	.40		0	7	A201	DL16bh
106	MM2112AN-L	256	4	S	MNG	350n	470n	195m	0.0	5.0	.65	2.0§	3.2m	.40		0	7	A201	DL16bh
107	P2101A	256	4	S	MNG	350n	220n	275m	0.0	5.0	.80	2.0§	2.0m	.45		0	7	A438	DL22ao
108	P2111A	256	4	S	MNG	350n	220n	275m	0.0	5.0	.80	2.0§	2.0m	.45		0	7	A200	DL18bi
109	P2112A	256	4	S	MNG	350n	220n	275m	0.0	5.0	.80	2.0§	2.0m	.45		0	7	A201	DL16dr
110	2101F	256	4	S	MNG	400n	400n	350m	0.0	5.0	.65	2.2	2.0m	.45		0	7	A196	DL22z

SYMBOLS AND CODES EXPLAINED IN INTERPRETER

2. READ-WRITE MEMORIES (RAMS)

IN ORDER OF (1)No.WORDS(2)No.BITS/WORD (3)MODE(4)STRUCT.(5)MAX ACC.TIME(6)TYPE No.

LINE No.	6 TYPE NUMBER	ORGANIZATION 1 NO. OF WORDS	2 BITS PER WORD	3 MODE	4 STRUCTURE CODE	5 MAX. ACCESS TIME (S)	MAX. WRITE CYCLE TIME (S)	MAX. POWER DISS. (W)	POWER SUPPLY SPAN NEG. (V)	POS. (V)	INPUT LOGIC LEVELS MAX. '0' (V)	MIN. '1' (V)	MIN.OUTPUT SINK CURRENT (A)	@ OUT (V)	MIN. CLOCK FREQ. (Hz)	OPER TEMP RNGE CODE -	+	DRAWINGS FUNCTIONAL EQUIVALENT NUMBER	OUTLINE
1	2611IK	256	4	S	MNG	400n	400n		12	5.0	.65	2.2	2.0mØ	.45		0	7	A200	DL18y
2	2611XA	256	4	S	MNG	400n	400n		12	5.0	.65	2.2	2.0mØ	.45		0	7	A200	DL18h
3	uPD412D	256	4	S	MNG	430n		261mt	5.0	12	.65	3.0	1.6m	.60		1	7	A222	DL24bh
4	C2101A4	256	4	S	MNG	450n	270n	1.0 Ø	0.0	5.0	.80	2.0§	2.0m	.45		0	7	A196	ML162a
5	C2101A-4	256	4	S	MNG	450n		275m	0.0	5.0	.80	2.0§	2.0m	.45		0	7	A438	DL22n
6	C2111A-4	256	4	S	MNG	450n		275m	0.0	5.0	.80	2.0§	2.0m	.45		0	7	A200	DL18am
7	C2112A-4	256	4	S	MNG	450n		275m	0.0	5.0	.80	2.0§	2.0m	.45		0	7	A201	DL16ah
8	D2101A-4	256	4	S	MNG	450n	270n	275m	0.0	5.0	.80	2.0§	2.0m	.45		0	7	A438	DL22ai
9	D2111A4	256	4	S	MNG	450n	270n	1.0 Ø	0.0	5.0	.80	2.0§	2.0m	.45		0	7	A200	ML231
10	D2111A-4	256	4	S	MNG	450n	270n	275m	0.0	5.0	.80	2.0§	2.0m	.45		0	7	A200	DL18bh
11	D2112A-4	256	4	S	MNG	450n	270n	275m	0.0	5.0	.80	2.0§	2.0m	.45		0	7	A201	DL16dq
12	M5L2101AS4	256	4	S	MNG	450n	450n	150mt	0.0	5.0						0	7		DLØ
13	M5L2111AS4	256	4	S	MNG	450n	450n	150m	0.0	5.0						0	7		DLØ
14	M5L2112AS4	256	4	S	MNG	450n	450n	150mt	0.0	5.0						0	7		DLØ
15	M120-2D1	256	4	S	MNG	450n	100m	500mØ	0.0	12	.60	2.4Δ	10uΔ			0	7	PN18bw	DL18an
16	M120-2F1	256	4	S	MNG	450n	100m	500mØ	0.0	12	.60	2.4Δ	10uΔ			0	7	PN18bw	DLØ
17	M58721S	256	4	S	MNG	450n	350n	315m	0.0	5.0	.80	2.2§	3.5m	.45		0	7	A196	DL22ah
18	M58722S	256	4	S	MNG	450n	350n	315m	0.0	5.0	.80	2.2§	3.5m	.45		0	7	A200	DLØ
19	M58723S	256	4	S	MNG	450n	350n	315m	0.0	5.0	.80	2.2§	3.5m	.45		0	7	A201	DL16ag
20	MB8101N	256	4	S	MNG	450n	450n	1.0 Ø	0.0	5.0	.65	2.2§	2.0m	.45		0	7	A196	ML204
21	MB8111N	256	4	S	MNG	450n	450n	1.0 Ø	0.0	5.0	.65	2.2§	2.0m	.45		0	7	A200	ML134b
22	MB8112N	256	4	S	MNG	450n	450n	1.0 Ø	0.0	5.0	.65	2.2§	2.0m	.45		0	7	A201	DL16g
23	MM2112AJ-4	256	4	S	MNG	450n	580n	250m	0.0	5.0	.65	2.0§	3.2m	.40		0	7	A201	DL16cr
24	MM2112AJ-4L	256	4	S	MNG	450n	580n	195m	0.0	5.0	.65	2.0§	3.2m	.40		0	7	A201	DL16cr
25	MM2112AN-4	256	4	S	MNG	450n	580n	250m	0.0	5.0	.65	2.0§	3.2m	.40		0	7	A201	DL16bh
26	MM2112AN-4L	256	4	S	MNG	450n	580n	195m	0.0	5.0	.65	2.0§	3.2m	.40		0	7	A201	DL16bh
27	MN2101	256	4	S	MNG	450n		150m	0.0	5.0	.65	2.2				1	7	A438	ML162a
28	MN2111	256	4	S	MNG	450n		150m	0.0	5.0	.65	2.2				1	8	A200	DL18bu
29	MN2112	256	4	S	MNG	450n		150m	0.0	5.0	.65	2.2				1	7	A201	DL16fk
30	P2101A4	256	4	S	MNG	450n	270n	1.0 Ø	0.0	5.0	.80	2.0§	2.0m	.45		0	7	A196	DL22aa
31	P2101A-4	256	4	S	MNG	450n	270n	275m	0.0	5.0	.80	2.0§	2.0m	.45		0	7	A438	DL22ao
32	P2111A4	256	4	S	MNG	450n	270n	1.0 Ø	0.0	5.0	.80	2.0§	2.0m	.45		0	7	A200	DL18a
33	P2111A-4	256	4	S	MNG	450n	270n	275m	0.0	5.0	.80	2.0§	2.0m	.45		0	7	A200	DL18bi
34	P2112A4	256	4	S	MNG	450n	320n	1.0 Ø	0.0	5.0	.80	2.0§	2.0m	.45		0	8	A201	DL16bw
35	P2112A-4	256	4	S	MNG	450n	270n	275m	0.0	5.0	.80	2.0§	2.0m	.45		0	7	A201	DL16dr
36	TMS4039-2/2101-1JL	256	4	S	MNG	450n	450n	175mt	0.0	5.0	.65	2.2§	2.0m	.45		0	7	A238	ML8n
37	TMS4039-2/2101-1NL	256	4	S	MNG	450n	450n	175mt	0.0	5.0	.65	2.2§	2.0m	.45		0	7	A238	ML197a
38	TMS4042-2/2111-1JL	256	4	S	MNG	450n	450n	175mt	0.0	5.0	.65	2.2§	2.0m	.45		0	7	A239	ML210
39	TMS4042-2/2111-1NL	256	4	S	MNG	450n	450n	175mt	0.0	5.0	.65	2.2§	2.0m	.45		0	7	A239	DL18b
40	TMS4043-2JL	256	4	S	MNG	450n	450n	175mt	0.0	5.0	.65	2.2§	2.0m	.45		0	7	A201	DL16x
41	TMS4043-2NL	256	4	S	MNG	450n	450n	175mt	0.0	5.0	.65	2.2§	2.0m	.45		0	7	A201	DL16fb
42	2101-1F	256	4	S	MNG	500n	500n	350m	0.0	5.0	.65	2.2	2.0mØ	.45		0	7	A196	DL22z
43	2101-1N	256	4	S	MNG	500n	500n	350m	0.0	5.0	.65	2.2	2.0m	.45		0	7	A196	DL22am
44	2111-1IK	256	4	S	MNG	500n	500n		12	5.0	.65	2.2	2.0mØ	.45		0	7	A200	DL18y
45	2111-1N	256	4	S	MNG	500n	500n	350m*	0.0	5.0	.65	2.2	2.0m	.45		0	7	A200	DL18bq
46	2111-1XA	256	4	S	MNG	500n	500n		12	5.0	.65	2.2	2.0mØ	.45		0	7	A200	DL18h
47	2112-1F	256	4	S	MNG	500n	500n	350m	0.0	5.0	.65	2.2	2.0m	.45		0	7	A201	DL16cv
48	2112-1N	256	4	S	MNG	500n	500n	350m	0.0	5.0	.65	2.2	2.0m	.45		0	7	A201	DL16fm
49	2606-1B	256	4	S	MNG	500n	500n	640mØ	0.0	5.0	.65	2.2§	1.9m	.45		0	7	A209	DL16fm
50	2606-1F	256	4	S	MNG	500n	500n	400m	0.0	5.0	.65	2.2	1.9m	.45		0	7	A209	DL16cv
51	2606-1I	256	4	S	MNG	500n	500n	400m	0.0	5.0	.65	2.2	1.9m	.45		0	7	A209	DL16q
52	2606-1N	256	4	S	MNG	500n	500n	400m	0.0	5.0	.65	2.2	1.9m	.45		0	7	A209	DL16fm
53	D2101-1	256	4	S	MNG	500n	500n	1.0 Ø	0.0	5.0	.65	2.2§	2.0m	.45		0	7	A196	DL22aa
54	D2111-1	256	4	S	MNG	500n	500n	1.0 Ø	0.0	5.0	.65	2.2§	2.0m	.45		0	7	A200	DL18av
55	MM2101-1D	256	4	S	MNG	500n	500n	300m	0.0	5.0	.65	2.2§	2.0m	.45		0	7	A196	ML8g
56	MM2101-1N	256	4	S	MNG	500n	500n	300m	0.0	5.0	.65	2.2§	2.0m	.45		0	7	A196	DL22v
57	MM2111-1D	256	4	S	MNG	500n	500n	300m	0.0	5.0	.65	2.2§	2.0m	.45		0	7	A200	DL18w
58	MM2111-1N	256	4	S	MNG	500n	500n	300m	0.0	5.0	.65	2.2§	2.0m	.45		0	7	A200	DL18p
59	2101-2F	256	4	S	MNG	650n	650n	350m	0.0	5.0	.65	2.2	2.0m	.45		0	7	A196	DL22z
60	2101-2N	256	4	S	MNG	650n	650n	350m	0.0	5.0	.65	2.2	2.0m	.45		0	7	A196	DL22am
61	2111-2I	256	4	S	MNG	650n	650n	350m*	0.0	5.0	.65	2.2	2.0m	.45		0	7	A200	DL18ae
62	2111-2IK	256	4	S	MNG	650n	650n		12	5.0	.65	2.2	2.0mØ	.45		0	7	A200	DL18y
63	2111-2N	256	4	S	MNG	650n	650n	350m*	0.0	5.0	.65	2.2	2.0m	.45		0	7	A200	DL18bq
64	2111-2XA	256	4	S	MNG	650n	650n		12	5.0	.65	2.2	2.0mØ	.45		0	7	A200	DL18h
65	2112-2F	256	4	S	MNG	650n	500n	350m	0.0	5.0	.65	2.2	2.0m	.45		0	7	A201	DL16cv
66	2112-2N	256	4	S	MNG	650n	500n	350m	0.0	5.0	.65	2.2	2.0m	.45		0	7	A201	DL16fm
67	C2101-2	256	4	S	MNG	650n	650n	1.0 Ø	0.0	5.0	.65	2.2§	2.0m	.45		0	7	A196	DL22c
68	C2111-2	256	4	S	MNG	650n	650n	1.0 Ø	0.0	5.0	.65	2.2§	2.0m	.45		0	7	A200	DL18as
69	C2112-2	256	4	S	MNG	650n	500n	1.0 Ø	0.0	5.0	.65	2.2§	2.0m	.45		0	7	A201	DL16ek
70	D2101-2	256	4	S	MNG	650n	650n	1.0 Ø	0.0	5.0	.65	2.2§	2.0m	.45		0	7	A196	DL22aa
71	D2111-2	256	4	S	MNG	650n	650n	1.0 Ø	0.0	5.0	.65	2.2§	2.0m	.45		0	7	A200	DL18av
72	D2112-2	256	4	S	MNG	650n	500n	1.0 Ø	0.0	5.0	.65	2.2§	2.0m	.45		0	7	A201	DL16cm
73	MM2101-2D	256	4	S	MNG	650n	650n	300m	0.0	5.0	.65	2.2§	2.0m	.45		0	7	A196	ML8g
74	MM2101-2N	256	4	S	MNG	650n	650n	300m	0.0	5.0	.65	2.2§	2.0m	.45		0	7	A196	DL22v
75	MM2111-2D	256	4	S	MNG	650n	650n	300m	0.0	5.0	.65	2.2§	2.0m	.45		0	7	A200	DL18w
76	MM2111-2N	256	4	S	MNG	650n	650n	300m	0.0	5.0	.65	2.2§	2.0m	.45		0	7	A200	DL18p
77	MM2112AJ-6	256	4	S	MNG	650n	680n	250m	0.0	5.0	.65	2.0§	3.2m	.40		0	7	A201	DL16cr
78	MM2112AJ-6L	256	4	S	MNG	650n	680n	195m	0.0	5.0	.65	2.0§	3.2m	.40		0	7	A201	DL16cr
79	MM2112AN-6	256	4	S	MNG	650n	680n	250m	0.0	5.0	.65	2.0§	3.2m	.40		0	7	A201	DL16bh
80	MM2112AN-6L	256	4	S	MNG	650n	680n	195m	0.0	5.0	.65	2.0§	3.2m	.40		0	7	A201	DL16bh
81	P2101-2	256	4	S	MNG	650n	650n	1.0 Ø	0.0	5.0	.65	2.2§	2.0m	.45		0	7	A196	DL22d
82	P2111-2	256	4	S	MNG	650n	650n	1.0 Ø	0.0	5.0	.65	2.2§	2.0m	.45		0	7	A200	DL18a
83	P2112-2	256	4	S	MNG	650n	500n	1.0 Ø	0.0	5.0	.65	2.2§	2.0m	.45		0	7	A201	DL16at
84	TMS4039-1/2101-2JL	256	4	S	MNG	650n	650n	175mt	0.0	5.0	.65	2.2§	2.0m	.45		0	7	A238	ML8n
85	TMS4039-1/2101-2NL	256	4	S	MNG	650n	650n	175mt	0.0	5.0	.65	2.2§	2.0m	.45		0	7	A238	ML197a
86	TMS4042-1/2111-2JL	256	4	S	MNG	650n	650n	175mt	0.0	5.0	.65	2.2§	2.0m	.45		0	7	A239	ML210
87	TMS4042-1/2111-2NL	256	4	S	MNG	650n	650n	175mt	0.0	5.0	.65	2.2§	2.0m	.45		0	7	A239	DL18b
88	TMS4043-1/2112-2JL	256	4	S	MNG	650n	650n	175mt	0.0	5.0	.65	2.2§	2.0m	.45		0	7	A201	DL16x
89	TMS4043-1/2112-2NL	256	4	S	MNG	650n	650n	175mt	0.0	5.0	.65	2.2§	2.0m	.45		0	7	A201	DL16fb
90	M120D1	256	4	S	MNG	700n	100m	500mØ	0.0	12	.60	2.4Δ	10uΔ			0	7	PN18bw	DL18an
91	M120F1	256	4	S	MNG	700n	100m	500mØ	0.0	12	.60	2.4Δ	10uΔ			0	7	PN18bw	DLØ
92	2606B	256	4	S	MNG	750n	750n	640mØ	0.0	5.0	.65	2.2§	1.9m	.45		0	7	A209	DL16fm
93	2606F	256	4	S	MNG	750n	750n	400m	0.0	5.0	.65	2.2	1.9m	.45		0	7	A209	DL16cv
94	2606I	256	4	S	MNG	750n	750n	400m	0.0	5.0	.65	2.2	1.9m	.45		0	7	A209	DL16q
95	2606N	256	4	S	MNG	750n	750n	400m	0.0	5.0	.65	2.2	1.9m	.45		0	7	A209	DL16fm
96	2111I	256	4	S	MNG	1.0u	1.0u	350m	0.0	5.0	.65	2.2	2.0m	.45		0	7	A200	DL18ae
97	2111IK	256	4	S	MNG	1.0u	1.0u		12	5.0	.65	2.2	2.0mØ	.45		0	7	A200	DL18y
98	2111N	256	4	S	MNG	1.0u	1.0u	350m	0.0	5.0	.65	2.2	2.0m	.45		0	7	A200	DL18bq
99	2111XA	256	4	S	MNG	1.0u	1.0u		12	5.0	.65	2.2	2.0mØ	.45		0	7	A200	DL18h
100	2112F	256	4	S	MNG	1.0u	850n	350m	0.0	5.0	.65	2.2	2.0m	.45		0	7	A201	DL16cv

MEMORY

SYMBOLS AND CODES EXPLAINED IN INTERPRETER

2. READ-WRITE MEMORIES (RAMS)

IN ORDER OF (1)No.WORDS(2)No.BITS/WORD (3)MODE(4)STRUCT.(5)MAX ACC.TIME(6)TYPE No.

LINE No.	6 TYPE NUMBER	ORGANIZATION 1 NO. OF WORDS	2 BITS PER WORD	3 MODE	4 STRUCTURE CODE	5 MAX. ACCESS TIME (S)	MAX. WRITE CYCLE TIME (S)	MAX. POWER DISS. (W)	POWER SUPPLY SPAN NEG. (V)	POS. (V)	INPUT LOGIC LEVELS MAX. '0' (V)	MIN. '1' (V)	MIN.OUTPUT SINK CURRENT (A)	@ OUT (V)	MIN. CLOCK FREQ. (Hz)	OPER TEMP RNGE CODE -	+	DRAWINGS FUNCTIONAL EQUIVALENT NUMBER	OUTLINE
1	2112N	256	4	S	MNG	1.0u	850n	350m	0.0	5.0	.65	2.2	2.0m	.45		0	7	A201	DL16fm
2	2601F	256	4	S	MNG	1.0u	1.0u		12	5.0	.65	2.2	2.0mØ	.45		0	7	A196	DL22z
3	C2101	256	4	S	MNG	1.0u	1.0u	1.0 Ø	0.0	5.0	.65	2.2§	2.0m	.45		0	7	A196	DL22c
4	C2111	256	4	S	MNG	1.0u	1.0u	1.0 Ø	0.0	5.0	.65	2.2§	2.0m	.45		0	7	A200	DL18as
5	C2112	256	4	S	MNG	1.0u	850n	1.0 Ø	0.0	5.0	.65	2.2§	2.0m	.45		0	7	A201	DL16ek
6	D2101	256	4	S	MNG	1.0u	1.0u	1.0 Ø	0.0	5.0	.65	2.2§	2.0m	.45		0	7	A196	DL22aa
7	D2111	256	4	S	MNG	1.0u	1.0u	1.0 Ø	0.0	5.0	.65	2.2§	2.0m	.45		0	7	A200	DL18av
8	D2112	256	4	S	MNG	1.0u	850n	1.0 Ø	0.0	5.0	.65	2.2§	2.0m	.45		0	7	A201	DL16cm
9	MM2101D	256	4	S	MNG	1.0u	1.0u	300m	0.0	5.0	.65	2.2§	2.0m	.45		0	7	A196	ML8g
10	MM2101N	256	4	S	MNG	1.0u	1.0u	300m	0.0	5.0	.65	2.2§	2.0m	.45		0	7	A196	DL22v
11	MM2111D	256	4	S	MNG	1.0u	1.0u	300m	0.0	5.0	.65	2.2§	2.0m	.45		0	7	A200	DL18w
12	MM2111N	256	4	S	MNG	1.0u	1.0u	300m	0.0	5.0	.65	2.2§	2.0m	.45		0	7	A200	DL18p
13	MM5269D	256	4	S	MNG	1.0u	1.0u	350m	0.0	5.0	.65	2.2§	2.0m	.45		0	7	A206	ML8g
14	MM5269N	256	4	S	MNG	1.0u	1.0u	350m	0.0	5.0	.65	2.2§	2.0m	.45		0	7	A206	DL22v
15	P2101	256	4	S	MNG	1.0u	1.0u	1.0 Ø	0.0	5.0	.65	2.2§	2.0m	.45		0	7	A196	DL22d
16	P2111	256	4	S	MNG	1.0u	1.0u	1.0 Ø	0.0	5.0	.65	2.2§	2.0m	.45		0	7	A200	DL18a
17	P2112	256	4	S	MNG	1.0u	850n	1.0 Ø	0.0	5.0	.65	2.2§	2.0m	.45		0	7	A201	DL16at
18	TMS4039/2101JL	256	4	S	MNG	1.0u	1.0u	175m†	0.0	5.0	.65	2.2§	2.0m	.45		0	7	A238	ML8n
19	TMS4039/2101NL	256	4	S	MNG	1.0u	1.0u	175m†	0.0	5.0	.65	2.2§	2.0m	.45		0	7	A238	ML197a
20	TMS4042/2111JL	256	4	S	MNG	1.0u	1.0u	175m†	0.0	5.0	.65	2.2§	2.0m	.45		0	7	A239	ML210
21	TMS4042/2111NL	256	4	S	MNG	1.0u	1.0u	175m†	0.0	5.0	.65	2.2§	2.0m	.45		0	7	A239	ML210
22	TMS4043/2112JL	256	4	S	MNG	1.0u	1.0u	175m†	0.0	5.0	.65	2.2§	2.0m	.45		0	7	A201	DL16x
23	TMS4043/2112NL	256	4	S	MNG	1.0u	1.0u	175m†	0.0	5.0	.65	2.2§	2.0m	.45		0	7	A201	DL16fb
24	SY21H01-1	256	4	S	MNI	150n	150n	1.0 Ø	0.0	5.0	.80	2.0§	3.2m	.40		0	5	A196	DLØ
25	SY21H11-1	256	4	S	MNI	150n	150n	1.0 Ø	0.0	5.0	.80	2.0§	3.2m	.40		0	5	A200	DLØ
26	SY21H12-1	256	4	S	MNI	150n	150n	1.0 Ø	0.0	5.0	.80	2.0§	3.2m	.40		0	5	A201	DLØ
27	SYC21H01	256	4	S	MNIØ	175n	175n	1.0 Ø	0.0	5.0	.80	2.0§	3.2m	.40		0	5	PN22f	DL22e
28	SYC21H11	256	4	S	MNIØ	175n	175n	1.0 Ø	0.0	5.0	.80	2.0§	3.2m	.40		0	5	A379	DL18w
29	SYC21H12	256	4	S	MNIØ	175n	175n	1.0 Ø	0.0	5.0	.80	2.0§	3.2m	.40		0	5	A201	DL16q
30	SYP21H01	256	4	S	MNIØ	175n	175n	1.0 Ø	0.0	5.0	.80	2.0§	3.2m	.40		0	5	PN22f	DL22ak
31	SYP21H11	256	4	S	MNIØ	175n	175n	1.0 Ø	0.0	5.0	.80	2.0§	3.2m	.40		0	5	A379	DL18g
32	SYP21H12	256	4	S	MNIØ	175n	175n	1.0 Ø	0.0	5.0	.80	2.0§	3.2m	.40		0	5	A201	DL16fc
33	SYC21H01-2	256	4	S	MNIØ	200n	200n	1.0 Ø	0.0	5.0	.80	2.0§	3.2m	.40		0	5	PN22f	DL22e
34	SYC21H11-2	256	4	S	MNIØ	200n	200n	1.0 Ø	0.0	5.0	.80	2.0§	3.2m	.40		0	5	A379	DL18w
35	SYC21H12-2	256	4	S	MNIØ	200n	200n	1.0 Ø	0.0	5.0	.80	2.0§	3.2m	.40		0	5	A201	DL16q
36	SYP21H01-2	256	4	S	MNIØ	200n	200n	1.0 Ø	0.0	5.0	.80	2.0§	3.2m	.40		0	5	PN22f	DL22ak
37	SYP21H11-2	256	4	S	MNIØ	200n	200n	1.0 Ø	0.0	5.0	.80	2.0§	3.2m	.40		0	5	A379	DL18g
38	SYP21H12-2	256	4	S	MNIØ	200n	200n	1.0 Ø	0.0	5.0	.80	2.0§	3.2m	.40		0	5	A201	DL16fc
39	SYC2111A	256	4	S	MNIØ	350n	350n	1.0 Ø	0.0	5.0	.80	2.0§	3.2m	.40		0	7	A200	DL18w
40	SYC2112A	256	4	S	MNIØ	350n	350n	1.0 Ø	0.0	5.0	.80	2.0§	3.2m	.40		0	7	A201	DL16q
41	RA3-4256	256	4	S	MNI	500n	500n	500m	0.0	5.0	.65	2.2§	1.6m	.40		0	7	A181	DL24cr
42	SYC2111-1	256	4	S	MNIØ	500n	500n	1.0 Ø	0.0	5.0	.65	2.2§	2.0m	.45		0	7	A200	DL18w
43	SYC2112-1	256	4	S	MNIØ	500n	500n	1.0 Ø	0.0	5.0	.65	2.2§	2.0m	.45		0	7	A201	DL16q
44	RA3-4256A	256	4	S	MNI	650n	650n	500m	0.0	5.0	.65	2.2§	1.6m	.40		0	7	A181	DL24cr
45	RA3-4256B	256	4	S	MNI	650n	650n	500m	0.0	5.0	.65	2.2§	1.6m	.40		0	7	A213	DL22y
46	IM7101	256	4	S	MNX	250n	250n		0.0	5.0	.80	2.0				0	7	PN22i	DLØ
47	IM7111	256	4	S	MNX	250n	250n		0.0	5.0	.80	2.0				0	7	PN18c	DLØ
48	IM7112	256	4	S	MNX	250n	250n		0.0	5.0	.80	2.0				0	7	PN16i	DLØ
49	uPD2101ALC2	256	4	S	MNX	250n	250n	350m♦	0.0	5.0	.80	2.0§	2.1m	.40		0	7	PN22f	DLØ
50	uPD2111ALC2	256	4	S	MNX	250n	250n	350m♦	0.0	5.0	.80	2.0§	2.1m	.40		0	7	PN18c	DLØ
51	IXD2212D	256	4	S	MNX	300n	300n		0.0	5.0	0.8	2.4				3	8	A610	DL18cq
52	MXD2212	256	4	S	MNX	300n	300n		0.0	5.0	0.8	2.4				5	C	A610	DL18cq
53	MXD2212-1	256	4	S	MNX	300n	300n		0.0	5.0	0.8	2.4				5	9	A610	DL18cq
54	X2212-30#ai	256	4	S	MNX	300n	300n		0.0	5.0	.80	2.0§	4.2m	.40		0	7	PN18co	DL18Ø
55	AM91L01BFM	256	4	S	MNX	400n	400n	175m	0.0	5.0	.80	2.0	3.2m	.40		5	C		FL40
56	AM91L11BFM	256	4	S	MNX	400n	400n	175m	0.0	5.0	.80	2.0	3.2m	.40		5	C		FL40
57	AM91L12BFM	256	4	S	MNX	400n	400n	175m	0.0	5.0	.80	2.0	3.2m	.40		5	C	A482	FL33b
58	AM9101BFM	256	4	S	MNX	400n	400n	290m	0.0	5.0	.80	2.0	3.2m	.40		5	C		FL40
59	AM9111BFM	256	4	S	MNX	400n	400n	290m	0.0	5.0	.80	2.0	3.2m	.40		5	C		FL40
60	uPD412C	256	4	S	MNX	430n		262m♦	5.0	12	.65	3.0	1.7m	.60		1	7	A222	DL24bh
61	uPD2101ALC4	256	4	S	MNX	450n	450n	350m♦	0.0	5.0	.80	2.0§	2.1m	.40		0	7	PN22f	DLØ
62	uPD2101ALC	256	4	S	MNX	450n	350n	367m	0.0	5.0	.80	2.0§	2.1m	.40		1	7	A196	DL22ab
63	uPD2101ALC-2	256	4	S	MNX	450n	250n	367m	0.0	5.0	.80	2.0§	2.1m	.40		1	7	A196	DL22ab
64	uPD2101ALC-4	256	4	S	MNX	450n	450n	367m	0.0	5.0	.80	2.0§	2.1m	.40		1	7	A196	DL22ab
65	uPD2111ALC4	256	4	S	MNX	450n	450n	350m♦	0.0	5.0	.80	2.0§	2.1m	.40		0	7	PN18c	DLØ
66	uPD2111ALC	256	4	S	MNX	450n	220n	341m	0.0	5.0	.80	2.0§	2.1m	.40		1	7	A200	DL18bj
67	uPD2111ALC-2	256	4	S	MNX	450n	170n	341m	0.0	5.0	.80	2.0§	2.1m	.40		1	7	A200	DL18bj
68	uPD2111ALC-4	256	4	S	MNX	450n	270n	341m	0.0	5.0	.80	2.0§	2.1m	.40		1	7	A200	DL18bj
69	AM91L01AFM	256	4	S	MNX	500n	500n	175m	0.0	5.0	.80	2.0	3.2m	.40		5	C		FL40
70	AM91L11AFM	256	4	S	MNX	500n	500n	175m	0.0	5.0	.80	2.0	3.2m	.40		5	C		FL40
71	AM91L12AFM	256	4	S	MNX	500n	500n	175m	0.0	5.0	.80	2.0	3.2m	.40		5	C	A482	FL33b
72	AM9101AFM	256	4	S	MNX	500n	500n	290m	0.0	5.0	.80	2.0	3.2m	.40		5	C		FL40
73	AM9111AFM	256	4	S	MNX	500n	500n	290m	0.0	5.0	.80	2.0	3.2m	.40		5	C		FL40
74	AM9112AFM	256	4	S	MNX	500n	500n	290m	0.0	5.0	.80	2.0	3.2m	.40		5	C	A482	FL33b
75	TMM142P	256	4	S	MPG	1.5u	1.0u	800m	15	5.0	0.8	-1.5§	10uΔ	1.0		2	8	A523	ML418
76	NC1711	256	4	S	MPN	900n	10u	510m	15	25	1.0%	4.2§	1.6m	.60		0	7	A411	DLØ
77	08C52	256	8	S	BEX	40n	80n	31	5.2	0.0	-1.5	-.90	22m#%	1.8		1	5		PL5
78	N82S208F	256	8	S	BTD	60n	40n$	925m	0.0	5.0	.85	2.0§	9.6m	.50		0	7	A367	DL22z
79	15C41	256	8	S	BTX	125n	150n	21	0.0	5.0	.80†	2.0	15m#	5.0		1	5		PL5a
80	RAM125-28A#1	256	8	S	BTX	125n	130n	3.8 †	5.0	5.0	.80	2.0	30mØ			1	8	A58a	PL3
81	RAM28A#1	256	8	S	BTX	180n	200n	2.8 †	5.0	5.0	.80	2.0	20m	.40		1	8	A58	PL3
82	RAM228A#1	256	8	S	BTX	180n	155n	2.8 †	5.0	5.0	.80	2.0	30mØ			1	8	A58a	PL3
83	RAM328A#1	256	8	S	BTX	300n	300n	2.8 †	5.0	5.0	.80	2.0	30mØ			1	5	A58a	PL3
84	3539ACD	256	8	S	MNX	300n	300n	400m	0.0	5.0	0.8	2.4	1.6m	0.4		0	7	A315a	DL22aq
85	3539ACP	256	8	S	MNX	300n	300n	400m	0.0	5.0	0.8	2.4	1.6m	0.4		0	7	A315a	DL22ap
86	L3539ACD	256	8	S	MNX	300n	300n	210m	0.0	5.0	0.8	2.4	1.6m	0.4		0	7	A315a	DL22aq
87	L3539ACP	256	8	S	MNX	300n	300n	210m	0.0	5.0	0.8	2.4	1.6m	0.4		0	7	A315a	DL22ap
88	3539-1CD	256	8	S	MNX	400n	150n$	394m	0.0	5.0	.65	2.2	1.6m	.40		0	7	A315	DL22aa
89	3539-1CP	256	8	S	MNX	400n	150n$	394m	0.0	5.0	.65	2.2	1.6m	.40		0	7	A315	DL22an
90	3539B	256	8	S	MNX	400n	350n	375m	0.0	5.0	.80	2.4	1.6m	.40		0	7		
91	35391CD	256	8	S	MNX	400n	150n$	394m	0.0	5.0	.80	2.4	1.6m	.40		0	7	A315a	DL22aa
92	35391CP	256	8	S	MNX	400n	150n$	394m	0.0	5.0	.80	2.4	1.6m	.40		0	7	A315a	DL22an
93	L3539-1CD	256	8	S	MNX	400n	400n	210m	0.0	5.0	0.8	2.4	1.6m	0.4		0	7	A315a	DL22aq
94	L3539-1CP	256	8	S	MNX	400n	400n	210m	0.0	5.0	0.8	2.4	1.6m	0.4		0	7	A315a	DL22ap
95	3539-2CD	256	8	S	MNX	500n	175n$	394m	0.0	5.0	.65	2.2	1.6m	.40		0	7	A315	DL22aa
96	3539-2CP	256	8	S	MNX	500n	175n$	394m	0.0	5.0	.65	2.2	1.6m	.40		0	7	A315	DL22an
97	3539A	256	8	S	MNX	500n	375n	375m	0.0	5.0	.80	2.4	1.6m	.40		0	7		
98	35392CD	256	8	S	MNX	500n	175n$	394m	0.0	5.0	.80	2.4	1.6m	.40		0	7	A315a	DL22aa
99	35392CP	256	8	S	MNX	500n	175n$	394m	0.0	5.0	.80	2.4	1.6m	.40		0	7	A315a	DL22an
100	L3539-2CD	256	8	S	MNX	500n	500n	210m	0.0	5.0	0.8	2.4	1.6m	0.4		0	7	A315a	DL22aq
101	L3539-2CP	256	8	S	MNX	500n	500n	210m	0.0	5.0	0.8	2.4	1.6m	0.4		0	7	A315a	DL22ap
102	3539U	256	8	S	MNX	650n	400n	375m	0.0	5.0	.80	2.4	1.6m	.40		0	7		
103	3539UCD	256	8	S	MNX	650n	225n$	1.6 Ø	0.0	5.0	.80	2.4§	1.6m	.40		0	7	A513	DL22aa
104	3539UCP	256	8	S	MNX	650n	225n$	1.6 Ø	0.0	5.0	.80	2.4§	1.6m	.40		0	7	A513	DL22aa

SYMBOLS AND CODES EXPLAINED IN INTERPRETER

2. READ-WRITE MEMORIES (RAMS)

IN ORDER OF (1)No.WORDS(2)No.BITS/WORD (3)MODE(4)STRUCT.(5)MAX ACC.TIME(6)TYPE No.

LINE No.	6 TYPE NUMBER	ORGANIZATION 1 NO. OF WORDS	2 BITS PER WORD	3 MODE	4 STRUCT-URE CODE	5 MAX. ACCESS TIME (S)	MAX. WRITE CYCLE TIME (S)	MAX. POWER DISS. (W)	POWER SUPPLY SPAN NEG. (V)	POWER SUPPLY SPAN POS. (V)	INPUT LOGIC LEVELS MAX. '0' (V)	INPUT LOGIC LEVELS MIN. '1' (V)	MIN.OUTPUT SINK CURRENT (A)	MIN.OUTPUT SINK CURRENT @ OUT (V)	MIN. CLOCK FREQ. (Hz)	OPER TEMP RNGE CODE -	OPER TEMP RNGE CODE +	DRAWINGS FUNCTIONAL EQUIVALENT NUMBER	DRAWINGS OUTLINE
1	SMA1001	256	8	S	MXN	25n	50n$	1.0 ♦	0.0	12	10*	.40				0	7	A64	ML74
2	08C51	256	9	S	BEX	40n	80n	3.4	5.2	0.0	-1.5	-.90	22m#%	1.8		1	5		PL5
3	S82S212N	256	9	S	BTD	70n	45n$			7.0	0.80	2.2§	8.0m	0.50		5	C	A456	DL22Ø
4	15C40	256	9	S	BTX	125n	150n	22	0.0	5.0	.80†	2.0	15m#	5.0		1	5		PL5a
5	RAM125-29A	256	9	S	BTX	125n	130n	4.7 †	5.0	5.0	.80	2.0	30mØ			1	8	A58a	PL3
6	RAM29A	256	9	S	BTX	180n	200n	3.4 †	5.0	5.0	.80	2.0	20m	.40		1	8	A58a	PL3
7	RAM229A	256	9	S	BTX	180n	155n	3.4 †	5.0	5.0	.80	2.0	30mØ			1	8	A58a	PL3
8	RAM329A	256	9	S	BTX	300n	300n	3.4 †	5.0	5.0	.80	2.0	30mØ			1	5	A58a	PL3
9	ASM30#1	256	9	S	MXX	300n	300n	35	0.0	5.0	.60	2.5	16m	.40		0	5		
10	ASM10#1	256	9	S	MXX	1.9u	1.4u	6.8	8.0	5.0	.80	2.0	16m	.40		0	5		
11	RAM125-32D	256	12	S	BTX	125n	130n	5.8 †	5.0	5.0	.80	2.0	30mØ			1	8	A59a	PL3a
12	RAM32D	256	12	S	BTX	180n	200n	4.3 †	5.0	5.0	.80	2.0	20m	.40		1	8	A59	PL3a
13	RAM232D	256	12	S	BTX	180n	155n	4.3 †	5.0	5.0	.80	2.0	30mØ			1	8	A59a	PL3a
14	RAM332D	256	12	S	BTX	300n	300n	4.3 †	5.0	5.0	.80	2.0	30mØ			1	5	A59a	PL3a
15	08C50	256	16	S	BEX	40n	80n	55	5.2	0.0	-1.5	-.90	22m#%	1.8		1	5		PL5
16	15C57	256	16	S	BTX	125n	150n	30	0.0	5.0	.80†	2.0	15m#	5.0		1	5		PL5
17	RAM125-36D	256	16	S	BTX	125n	130n	7.6 †	5.0	5.0	.80	2.0	30mØ			1	8	A59a	PL3a
18	RAM36D	256	16	S	BTX	180n	200n	5.6 †	5.0	5.0	.80	2.0	20m	.40		1	8	A59a	PL3a
19	RAM236D	256	16	S	BTX	180n	155n	5.6 †	5.0	5.0	.80	2.0	30mØ			1	8	A59a	PL3a
20	RAM336D	256	16	S	BTX	300n	300n	5.6 †	5.0	5.0	.80	2.0	30mØ			1	5	A59a	PL3a
21	08C49	256	18	S	BEX	40n	80n	60	5.2	0.0	-1.5	-.90	22m#%	1.8		1	5		PL5
22	15C56	256	18	S	BTX	125n	150n	34	0.0	5.0	.80†	2.0	15m#	5.0		1	5		PL5
23	RM53L	512	1	D		365n	140n$		0.0	13	13	0.0				0	7	A61	ML23a
24	SCM5522C	512	1	S	MCA	350n	470n		0.0	10	.60	9.4	1.0m	.45		5	C	A143	DL16cx
25	SCM5522D	512	1	S	MCA	350n	470n		0.0	10	.60	9.4	1.0m	.45		5	C	A143	MO001AE
26	SCM5522H	512	1	S	MCA	350n	470n		0.0	10	.60	9.4	1.0m	.45		5	C	A143	CHØ
27	S2222	512	1	S	MCG	350n	420n	7.5m†	0.0	10	.60	9.4	1.0m	.45		0	7	A143	ML153
28	S2222A-1U	512	1	S	MCG	400n	940n	7.5m†	0.0	10						0	7	A143	ML5d
29	S2222A-2H	512	1	S	MCG	400n	940n	7.5m†	0.0	10						0	7	A143	DL16bt
30	RAM18A#3	512	2	S	BTX	180n	200n	2.2 †	5.0	5.0	.80	2.0	20m	.40		1	8	A58	PL3
31	RAM218A#3	512	2	S	BTX	180n	155n	2.2 †	5.0	5.0	.80	2.0	30mØ			1	8	A58a	PL3
32	RAM125-28A#4	512	4	S	BTX	125n	130n	3.8 †	5.0	5.0	.80	2.0	30mØ			1	8	A58a	PL3
33	RAM28A#4	512	4	S	BTX	180n	200n	2.8 †	5.0	5.0	.80	2.0	20m	.40		1	8	A58	PL3
34	RAM228A#4	512	4	S	BTX	180n	155n	2.8 †	5.0	5.0	.80	2.0	30mØ			1	8	A58a	PL3
35	RAM328A#4	512	4	S	BTX	300n	300n	2.8 †	5.0	5.0	.80	2.0	30mØ			1	5	A58a	PL3
36	HM6513-9	512	4	S	MCG			35m	0.0	5.0	.80	3.0				4	8	A404	
37	30C32	512	8	D	HNC	220n	350n	9.1	6.0	10	.80†	2.0	15m#	5.0	167kΔ	1	5		PL5a
38	85100511	512	8	S	BEX	25n	25n		6.0	0.0	-1.4	-1.0	20mØ			0	5	A12	PL2
39	08C16	512	8	S	BEX	40n	80n	31	5.2	0.0	-1.5	-.90	22m#%	1.8		1	5		PL5
40	15C55	512	8	S	BTX	125n	150n	27	0.0	5.0	.80†	2.0	15m#	5.0		1	5		PL5
41	RAM125-48A#1	512	8	S	BTX	125n	130n	4.9 †	5.0	5.0	.80	2.0	30mØ			1	8	A58a	PL3
42	RAM48A#1	512	8	S	BTX	180n	200n	3.9 †	5.0	5.0	.80	2.0	20m	.40		1	8	A58	PL3
43	RAM248A#1	512	8	S	BTX	180n	155n	3.9 †	5.0	5.0	.80	2.0	30mØ			1	8	A58a	PL3
44	RAM348A#1	512	8	S	BTX	300n	300n	3.9 †	5.0	5.0	.80	2.0	30mØ			1	5	A58a	PL3
45	NCR4485	512	8	S	MNM	450n	450n		0.0	5.0	0.8	2.4				0	6		DL28Ø
46	30C31	512	9	D	HNC	220m	350n	9.3	6.0	10	.80†	2.0	15m#	5.0	167kΔ	1	5		PL5a
47	85100811	512	9	S	BEX	25n	25n		6.0	0.0	-1.4	-1.0	20mØ			0	5	A12	PL2
48	08C14	512	9	S	BEX	40n	80n	34	5.2	0.0	-1.5	-.90	22m#%	1.8		1	5		PL5
49	15C54	512	9	S	BTX	125n	150n	30	0.0	5.0	.80†	2.0	15m#	5.0		1	5		PL5
50	RAM125-49A	512	9	S	BTX	125n	130n	6.1 †	5.0	5.0	.80	2.0	30mØ			1	8	A58a	PL3
51	RAM49A	512	9	S	BTX	180n	200n	4.9 †	5.0	5.0	.80	2.0	20m	.40		1	8	A58a	PL3
52	RAM249A	512	9	S	BTX	180n	155n	4.9 †	5.0	5.0	.80	2.0	30mØ			1	8	A58a	PL3
53	RAM349A	512	9	S	BTX	300n	300n	4.9 †	5.0	5.0	.80	2.0	30mØ			1	5	A58a	PL3
54	ASM30#2	512	9	S	MXX	300n	300n	35	0.0	5.0	.60	2.5	16m	.40		0	5		
55	ASM10#2	512	9	S	MXX	1.9u	1.4u	6.8	8.0	5.0	.80	2.0	16m	.40		0	5		
56	RAM125-50A	512	10	S	BTX	125n	130n	6.1 †	5.0	5.0	.80	2.0	30mØ			1	8	A58a	PL3
57	RAM50A	512	10	S	BTX	180n	200n	4.9 †	5.0	5.0	.80	2.0	20m	.40		1	8	A58a	PL3
58	RAM250A	512	10	S	BTX	180n	155n	4.9 †	5.0	5.0	.80	2.0	30mØ			1	8	A58a	PL3
59	RAM350A	512	10	S	BTX	300n	300n	4.9 †	5.0	5.0	.80	2.0	30mØ			1	5	A58a	PL3
60	RAM125-52D	512	12	S	BTX	125n	130n	7.4 †	5.0	5.0	.80	2.0	30mØ			1	8	A59a	PL3a
61	RAM52D	512	12	S	BTX	180n	200n	6.0 †	5.0	5.0	.80	2.0	20m	.40		1	8	A59	PL3a
62	RAM252D	512	12	S	BTX	180n	155n	6.0 †	5.0	5.0	.80	2.0	30mØ			1	8	A59a	PL3a
63	RAM352D	512	12	S	BTX	300n	300n	6.0 †	5.0	5.0	.80	2.0	30mØ			1	5	A59a	PL3a
64	30C30	512	16	D	HNC	220n	350n	14	6.0	10	.80†	2.0	15m#	5.0	167kΔ	1	5		PL5a
65	08C22	512	16	S	BEX	40n	80n	55	5.2	0.0	-1.5	-.90	22m#%	1.8		1	5		PL5
66	15C47	512	16	S	BTX	125n	150n	50	0.0	5.0	.80†	2.0	15m#	5.0		1	5		PL5
67	RAM125-56D	512	16	S	BTX	125n	130n	9.8 †	5.0	5.0	.80	2.0	30mØ			1	8	A59a	PL3a
68	RAM56D	512	16	S	BTX	180n	200n	7.9 †	5.0	5.0	.80	2.0	20m	.40		1	8	A59a	PL3a
69	RAM256D	512	16	S	BTX	180n	155n	7.9 †	5.0	5.0	.80	2.0	30mØ			1	8	A59a	PL3a
70	RAM356D	512	16	S	BTX	300n	300n	7.9 †	5.0	5.0	.80	2.0	30mØ			1	5	A59a	PL3a
71	30C29	512	18	D	HNC	220m	350n	14	6.0	10	.80†	2.0	15m#	5.0	167kΔ	1	5		PL5a
72	08C05	512	18	S	BEX	40n	80n	60	5.2	0.0	-1.5	-.90	22m#%	1.8		1	5		PL5
73	15C53	512	18	S	BTX	125n	150n	55	0.0	5.0	.80†	2.0	15m#	5.0		1	5		PL5
74	MC2102A4	1000	1	S	MNG	450n	450n	1.0 Ø	0.0	5.0	.80	2.0§	2.1m	.45		5	C	PN16m	DL16ek
75	MC2102A6	1000	1	S	MNG	650n	650n	1.0 Ø	0.0	5.0	.65	2.2§	1.9m	.45		5	C	PN16m	DL16ek
76	MEM-1B	1000	8	S			500n	425m	0.0	5.0						0	7		
77	MEM-2	1000	8	S			550n		-12	12						0	7		
78	MEM-6	1000	8	S			500n	200m	0.0	5.0						0	7		
79	RC82S10F	1024	1		BTD	60n	60n	775m	0.0	5.0	.80	2.1Δ	16m	.50		5	C	A242	DL16cv
80	RC82S10I	1024	1		BTX	70n	75n	850m	0.0	5.0	.80	2.1Δ	16m	.50		5	C	A242	DL16p
81	MWS5001AD	1024	1		MCS	150n		2.5m	0.0	5.0	.80	3.5	1.6m	.40		2	8	PN16h	DLØ
82	uPD404D	1024	1	D	MNA	250n	660n	450m†	5.0	16	.50	3.0			500	0	7	A219	
83	EA1500A#1	1024	1	D	MNG	60n	240n	220m	15	15	.80	14.2	900u			0	6	A101	DL18v
84	EA1500A#2	1024	1	D	MNG	60n	240n	220m	15	15	.80	14.2	900u			0	6	A101	DL18g
85	C2105-1	1024	1	D	MNG	80n	260n	1.0 Ø	5.0	12	1.0	4.0	1.0uΔ	0.0	100kΔ	0	7	A198	DL18as
86	P2105-1	1024	1	D	MNG	80n	260n	1.0 Ø	5.0	12	1.0	4.0	1.0uΔ	0.0	100kΔ	0	7	A198	DL18a
87	C2105-2	1024	1	D	MNG	85n	190n	1.0 Ø	5.0	12	1.0	4.0	1.0uΔ	0.0	100kΔ	0	5	A198	DL18as
88	EA1500	1024	1	D	MNG	85n	270n	220m	15	15	.80	14.2	900u			0	7	A101	DL18v
89	P2105-2	1024	1	D	MNG	85n	190n	1.0 Ø	5.0	12	1.0	4.0	1.0uΔ	0.0	100kΔ	0	5	A198	DL18a
90	MB8201	1024	1	D	MNG	90n	135n	180m†	5.2	17	.80	10.9				0	7	A226	ML162
91	MB8201H	1024	1	D	MNG	90n	135n	180m†	5.2	12	.80	10.9				0	7	A226	ML162
92	C2105	1024	1	D	MNG	95n	270n	1.0 Ø	5.0	12	1.0	4.0	1.0uΔ	0.0	100kΔ	0	7	A198	DL18as
93	P2105	1024	1	D	MNG	95n	270n	1.0 Ø	5.0	12	1.0	4.0	1.0uΔ	0.0	100kΔ	0	7	A198	DL18a
94	EA1500A1#1	1024	1	D	MNG	120n	470n	220m	15	15	.80	14.2	900u			0	6	A101	DL18v
95	EA1500A1#2	1024	1	D	MNG	120n	470n	220m	15	15	.80	14.2	900u			0	6	A101	DL18g
96	MB8201N	1024	1	D	MNG	120n	135n	180m†	5.2	12	.80	10.9				0	7	A226	ML162
97	S5103	1024	1	D	MNG	120n	300n	250m†	10	0.0	-9.5	-.50				0	7	A62a	ML73
98	EA1500-1	1024	1	D	MNG	150n	450n	220m	15	15	.80	14.2	900u♦			0	7	A101	DL18v
99	EA1501	1024	1	D	MNG	150n	450n	120m	12	12	.80	11.4	900u			0	7	A101	DL18v
100	HAB1500-1	1024	1	D	MNG	150n	450n	200m	15	15	.80	14.2	900u			0	7	A101	DL18v
101	HAB1501	1024	1	D	MNG	150n	450n	120m	12	12	.80	11.4	900u		500 Δ	0	7	A101	DL18v
102	EA1502	1024	1	D	MNG	200n	450n	165m	12	12	.80	11.4	1.6m	.40	500	0	7	A129	DL18v
103	HAB1502	1024	1	D	MNG	200n	450n	165m	12	12	.80	3.0	1.6m	.40	500 Δ	0	7		
104	SCL5710	1024	1	D	MNG	200n	300n	100u†	0.0	15					100 Δ			A83	DLØ
105	SY1103A-X	1024	1	D	MNI	110n	300n	1.0 Ø	25	.30	1.0	3.0	7.0m	.70	1.0kΔ	0	7	PN18h	DLØ
106	SYC1103A-1	1024	1	D	MNI	145n	340n	1.0 Ø	25	.30	1.0	19	3.2m	.40	1.0k	0	7	PN18h	DLØ
107	SYP1103A-1	1024	1	D	MNI	145n	340n	1.0 Ø	25	.30	1.0	19	3.2m	.40	1.0k	0	7	PN18h	DLØ
108	TMS4062JC	1024	1	D	MPA	150n	290n	180m	0.0	20	2.0	-2.0	2.0uΔ	7.0	500	0	7	A69	DLØ
109	TMS4063JC	1024	1	D	MPA	150n	250n	120n	0.0	20	2.0	-2.0	2.0uΔ	7.0	500	0	7	A69	DLØ
110	TMS4063NC	1024	1	D	MPA	150n	250n	120n	0.0	20	2.0	-2.0	2.0uΔ	7.0	500	0	7	A69	DLØ

SYMBOLS AND CODES EXPLAINED IN INTERPRETER

2. READ-WRITE MEMORIES (RAMS)

IN ORDER OF (1)No.WORDS(2)No.BITS/WORD (3)MODE(4)STRUCT.(5)MAX ACC.TIME(6)TYPE No.

LINE No.	6 TYPE NUMBER	ORGANIZATION 1 NO. OF WORDS	2 BITS PER WORD	3 MODE	4 STRUCTURE CODE	5 MAX. ACCESS TIME (S)	MAX. WRITE CYCLE TIME (S)	MAX. POWER DISS. (W)	POWER SUPPLY SPAN NEG. (V)	POS. (V)	INPUT LOGIC LEVELS MAX. '0' (V)	MIN. '1' (V)	MIN.OUTPUT SINK CURRENT (A)	@ OUT (V)	MIN. CLOCK FREQ. (Hz)	OPER TEMP RNGE CODE -	+	DRAWINGS FUNCTIONAL EQUIVALENT NUMBER	OUTLINE
1	UA2524	1024	1	D	MPA	280n	500n	320m	0.0	16	1.0	15	1.0uΔ	0.0	500 Δ	5	C	A2	ML25
2	UA3524	1024	1	D	MPA	280n	500n	320m	0.0	16	1.0	15	1.0uΔ	0.0	500 Δ	2	7	A2	ML25
3	S1103X-1P	1024	1	D	MPG	120n	270n	550m†	0.0	22					500 Δ	0	7	A146	ML3d
4	S1103X-2P	1024	1	D	MPG	120n	270n	550m†	0.0	22					500 Δ	0	7	A146	ML3e
5	S1103AX-1P	1024	1	D	MPG	125n	285n	660m†	0.0	22					500 Δ	0	7	A146a	ML3d
6	S1103AX-2P	1024	1	D	MPG	125n	285n	660m†	0.0	22					500 Δ	0	7	A146a	ML3e
7	C1103A1	1024	1	D	MPG	145n	340n	1.0 Ø	0.0	19	1.0	18	10uΔ	0.0	1.0kΔ	0	7	A195	DL18as
8	C1103A2	1024	1	D	MPG	145n	400n	1.0 Ø	0.0	19	1.0	18	10uΔ	0.0	1.0kΔ	0	7	A195	DL18as
9	D1103A1	1024	1	D	MPG	145n	340n	1.0 Ø	0.0	19	1.0	18	10uΔ	0.0	1.0kΔ	0	7	A195	DL18av
10	D1103A2	1024	1	D	MPG	145n	400n	1.0 Ø	0.0	19	1.0	18	10uΔ	0.0	1.0kΔ	0	7	A195	DL18av
11	P1103A1	1024	1	D	MPG	145n	340n	1.0 Ø	0.0	19	1.0	18	10uΔ	0.0	1.0kΔ	0	7	A195	DL18a
12	P1103A2	1024	1	D	MPG	145n	400n	1.0 Ø	0.0	19	1.0	18	10uΔ	0.0	1.0kΔ	0	7	A195	DL18a
13	S1103A1-1P	1024	1	D	MPG	145n	340n	660m†	0.0	22					500 Δ	0	7	A146a	ML3d
14	S1103A1-2P	1024	1	D	MPG	145n	340n	660m†	0.0	22					500 Δ	0	7	A146a	ML3e
15	1103-1IK	1024	1	D	MPG	150n	340n	1.0 Ø	0.0	19	2.0	18	10uΔ	0.0	1.0kΔ	0	5	A2	DL18y
16	1103-1XA	1024	1	D	MPG	150n	340n	1.0 Ø	0.0	19	2.0	18	10uΔ	0.0	1.0kΔ	0	5	A2	DL18aq
17	C1103-1	1024	1	D	MPG	150n	340n	1.0 Ø	0.0	19	1.0	18	10uΔ	0.0	1.0kΔ	0	5	A2	DL18as
18	D1103-1	1024	1	D	MPG	150n	340n	1.0 Ø	0.0	19	1.0	18	10uΔ	0.0	1.0kΔ	0	5	A2	DL18av
19	GYQ131	1024	1	D	MPG	150n	315n	379m	0.0	19	1.5	18.1	10u	0.0		0	5	A169	DL18v
20	ITT1103-1	1024	1	D	MPG	150n	340n	409m	0.0	19	1.0	18	10uΔ		1.0k	0	5	A2	ML115d
21	MF1103-1	1024	1	D	MPG	150n	340n	1.0 Ø	0.0	19	1.0	18	1.1m♦Ø	.115	1.0kΔ	0	5	A2	DL18a
22	MF1103-1#1	1024	1	D	MPG	150n	340n	1.0 Ø	0.0	19	1.0	18	1.1m♦Ø	.115	1.0kΔ	0	5	A2	DL18a
23	MF1103-1#2	1024	1	D	MPG	150n	340n	1.0 Ø	0.0	19	1.0	18	1.1m♦Ø	.115	1.0kΔ	0	5	A2	ML25
24	P1103-1	1024	1	D	MPG	150n	340n	1.0 Ø	0.0	19	18	1.0	1.0uΔ	0.0	500 Δ	0	7	A2	DL18a
25	RA9-1103E	1024	1	D	MPG	150n	340n	1.0 Ø	0.0	22	-1.0	23.5	600u$	.06		0	5	A2	ML112
26	S1103-1	1024	1	D	MPG	150n	360n	550m†	0.0	19	.080%	.085	800u	.085		0	5	A164	ML152
27	S3103	1024	1	D	MPG	150n	360n	550m†	0.0	19	1.0	18	1.0uΔ	0.0	500 Δ	0	7	A62	ML152
28	TMS1103-1JL	1024	1	D	MPG	150n		1.0 Ø	0.0	20	2.0	19			1.0kΔ	0	5	A197	ML210
29	TMS1103-1NL	1024	1	D	MPG	150n		1.0 Ø	0.0	20	2.0	19			1.0kΔ	0	5	A197	DL18b
30	C1103A	1024	1	D	MPG	205n	580n	1.0 Ø	0.0	16	1.0	15	1.0uΔ	0.0	500 Δ	0	7	A195	DL18as
31	D1103A	1024	1	D	MPG	205n	580n	1.0 Ø	0.0	16	1.0	15	1.0uΔ	0.0	500 Δ	0	7	A195	DL18av
32	P1103A	1024	1	D	MPG	205n	580n	1.0 Ø	0.0	16	1.0	15	1.0uΔ	0.0	500 Δ	0	7	A195	DL18a
33	S146	1024	1	D	MPG	205n	390n	550m†	0.0	19	.080%	.085	800u	.085		0	5	A164	ML152
34	S1103A-1P	1024	1	D	MPG	205n	580n	425m†	0.0	19					500 Δ	0	7	A146a	ML3d
35	S1103A-2P	1024	1	D	MPG	205n	580n	425m†	0.0	19					500 Δ	0	7	A146a	ML3e
36	S2146	1024	1	D	MPG	205n	390n	550m†	0.0	19	1.0	18	1.0uΔ	0.0	500 Δ	0	7	A62	ML152
37	MF7005	1024	1	D	MPG	215n	390n	1.0 Ø	0.0	19	1.0	18	1.1m♦Ø	.115	1.0kΔ	0	5	A2	DL18a
38	RA9-1103D	1024	1	D	MPG	220n	390n	1.0 Ø	0.0	22	-1.0	23.5	600u$	.06		0	5	A2	ML112
39	2508XC	1024	1	D	MPG	270n	480n	730mØ	12	5.0	.80*	4.0	2.7m	-1.0	500 Δ	0	7	A77	DL22p
40	1103IK	1024	1	D	MPG	300n	580n	1.0	0.0	16	1.0	15				0	7	A2	DL18y
41	1103XA	1024	1	D	MPG	300n	580n	1.0	0.0	16	1.0	15				0	7	A2	DL20v
42	C1103	1024	1	D	MPG	300n	580n	1.0 Ø	0.0	16	15*	1.8	1.0uΔ	0.0	500 Δ	0	7	A2	DL18as
43	CM1103	1024	1	D	MPG	300n	580nΔ		0.0	16	1.0	15	1.0uΔ	0.0	500 Δ	0	7	A22	DLØ
44	D1103	1024	1	D	MPG	300n	580n	1.0 Ø	0.0	16	15*	1.8	1.0uΔ	0.0	500 Δ	0	7	A2	DL18av
45	GYQ101	1024	1	D	MPG	300n	565n	337m	0.0	16	1.8	15	1.0u	0.0	500 Δ	0	7	A2	DLØ
46	ITT1103	1024	1	D	MPG	300n	580n	300u%†	0.0	16	1.8	15Δ			500 Δ	0	7	A2	ML115d
47	M58533P	1024	1	D	MPG	300n	580n	256m†	0.0	16					500 Δ	0	7	A2	DL18bv
48	MB8103	1024	1	D	MPG	300n	600n	270m†	0.0	19	2.3	14.5	1.0uΔ	0.0		0	7	A2	ML73
49	MF1103	1024	1	D	MPG	300n	580n	1.0 Ø	0.0	16	1.0	15	600u♦Ø	.060	500 Δ	0	7	A2	DL18a
50	MF1103#1	1024	1	D	MPG	300n	580n	1.0 Ø	0.0	16	1.0	15	600u♦Ø	.060	500 Δ	0	7	A2	DL18a
51	MF1103#2	1024	1	D	MPG	300n	580n	1.0 Ø	0.0	16	1.0	15	600u♦Ø	.060	500 Δ	0	7	A2	ML25
52	ML1103	1024	1	D	MPG	300n	580n	400mØ	0.0	16	15	1.0	600u♦		500 Δ	0	7	A2	DL18a
53	MM1103D	1024	1	D	MPG	300n	580n	500mØ	0.0	16	1.0	15			500 Δ	2	7	A103	DL18a
54	MM1103N	1024	1	D	MPG	300n	580n	500mØ	0.0	16	1.0	15			500	2	7	A103	ML119
55	MN1003	1024	1	D	MPG	300n	580n	1.0 Ø	0.0	16	17	1.0	1.0uΔ	0.0	500 Δ	0	6	A168	ML119
56	P1103	1024	1	D	MPG	300n	580n	1.0 Ø	0.0	16	17	1.0	1.0uΔ	0.0	500 Δ	0	7	A2	DL18a
57	RA9-1103B	1024	1	D	MPG	300n	580n	1.0 Ø	0.0	19	-1.0	17	600u$	.06		0	6	A2	ML112
58	RA9-1103C	1024	1	D	MPG	300n	580n	1.0 Ø	0.0	19	-1.0	17	600u$	.06		0	6	A2	ML112
59	S1103	1024	1	D	MPG	300n	580n	350m†	0.0	16	.040%	.050	400u	.040		0	6	A164	ML152
60	S2103	1024	1	D	MPG	300n	580n	350m†	0.0	16	1.8	15	1.0uΔ	0.0	500 Δ	0	7	A62	ML152
61	TMS1103JL	1024	1	D	MPG	300n		1.0 Ø	0.0	16	1.5	15.3			500 Δ	0	7	A197	ML210
62	TMS1103NL	1024	1	D	MPG	300n		1.0 Ø	0.0	16	1.5	15.3			500 Δ	0	7	A197	DL18b
63	MM4260	1024	1	D	MPG	350n	750n	400m	12	5.0					1.0kΔ	5	C		
64	MM5260D	1024	1	D	MPG	350n	600n	600mØ	12	5.0	3.0*	4.0	1.6m	.40	500 Δ	2	7	A104	DLØ
65	MM5260N	1024	1	D	MPG	350n	600n	600mØ	12	5.0	3.0*	4.0	1.6m	.40	500	2	7	A104	ML2e
66	RA9-1103A	1024	1	D	MPG	350n	580n	1.0 Ø	0.0	19	-1.0	17	600u$	.06		0	5	A2	ML112
67	MM5261D	1024	1	D	MPG	400n	625n	400m†	12	5.0	.80	3.0§	1.6m	.40	500 Δ	0	7	PN18b	DL18w
68	MM5261N	1024	1	D	MPG	400n	625n	400m†	12	5.0	.80	3.0§	1.6m	.40	500 Δ	0	7	PN18b	DL18p
69	MM4261D	1024	1	D	MPG	450n	750n	400m†	12	5.0	.80	3.0§	1.6m	.40	500 Δ	5	C	PN18b	DL18w
70	MM4261N	1024	1	D	MPG	450n	750n	400m†	12	5.0	.80	3.0§	1.6m	.40	500 Δ	5	C	PN18b	DL18p
71	MF7006	1024	1	D	MPG	220	390	1.0 Ø	0.0	19	1.0	18	600u♦Ø	.06		0	5	A2	DL18a
72	MK4006-6P	1024	1	D	MPI	400n	650n	50m♦	12	5.0	.80	4.0			500 Δ	0	7	A35	DL16i
73	MK4006P	1024	1	D	MPI	400n	650n	50m♦	12	5.0	.80	4.0			500 Δ	0	7	A35	DL16i
74	S4006C	1024	1	D	MPI	400n	650n	450m	12	5.0	.80	3.5				0	6	A167	DL16k
75	S4006LC	1024	1	D	MPI	400n	650n	450m	12	5.0	.80	3.5				0	6	A167	DL16k
76	MK4008-6P	1024	1	D	MPI	500n	900n	50m♦	12	5.0	.80	4.0			500 Δ	0	7	A35	DL16i
77	MK4008P	1024	1	D	MPI	500n	900n	50m♦	12	5.0	.80	4.0			500 Δ	0	7	A35	DL16i
78	S4008	1024	1	D	MPI	500n	900n	450m	12	5.0	.80	4.0	1.0m	0.0	500 Δ	0	7	A35	ML110
79	S4008C	1024	1	D	MPI	500n	900u	450m	12	5.0	.80	3.5				0	6	A167	DL16k
80	S4008LC	1024	1	D	MPI	500n	900u	450m	12	5.0	.80	3.5				0	6	A167	DL16k
81	S4008R	1024	1	D	MPI	500n	900n	450m	12	5.0	.80	4.0	1.6m	.40	500 Δ	0	7	A35a	ML110
82	MK4008-9P	1024	1	D	MPI	800n	1.0u	544m	12	5.0	.80	4.0			500 Δ	0	7	A35	DL16i
83	S4008-9	1024	1	D	MPI	800n	1.0u	450m	12	5.0	.80	3.5				0	6	A167	DL16k
84	GER1103	1024	1	D	MPR	300n	580n	400mØ	0.0	16	1.0	15	1.0uΔ	0.0	500 Δ	0	7	A2	DLØ
85	TMS4062JL	1024	1	D	MPX	130n	200n	120m†	0.0	20	2.0	18	2.0uΔ		500	0	7	A69	ML8n
86	TMS4062NL	1024	1	D	MPX	130n	200n	120m†	0.0	20	2.0	18	2.0uΔ		500	0	7	A69	ML197a
87	TMS4063JL	1024	1	D	MPX	130n	200n	120m†	0.0	20	2.0	18	2.0uΔ		500	0	7	A69	ML210
88	TMS4063NL	1024	1	D	MPX	130n	200n	120m†	0.0	20	2.0	18	2.0uΔ		500	0	7	A69	DL18b
89	91600211	1024	1	D	MPX	150n	290n	180m†	0.0	20	2.0	18	2.0uΔ		500 Δ	0	7	A14	ML8
90	IM6002-6D	1024	1	D	MPX	150n	290n	180m†	0.0	20			2.0uΔ		500 Δ	0	7	A14	ML241
91	IM6002-6E	1024	1	D	MPX	150n	290n	180m†	0.0	20			2.0uΔ		500 Δ	0	7	PN18g	DL18ah
92	IM6002-11CDF	1024	1	D	MPX	150n	250n	180m†	0.0	20	1.0	18			500 Δ	0	7	A320a	ML241
93	IM6002-11CDN	1024	1	D	MPX	150n	250n	180m†	0.0	20	1.0	18			500 Δ	0	7	A320	DL18ah
94	91600111	1024	1	D	MPX	350n	860n	75u%	18	0.0	2.0	17	3.0m♦		500 Δ	5	C	A15	ML8
95	91600111-6C	1024	1	D	MPX	350n	860n	75u%	18	0.0	2.0	17	3.0m♦		500 Δ	0	7	A15	ML99
96	91600111-6D	1024	1	D	MPX	350n	860n	75u%	18	0.0	2.0	17	3.0m♦		500 Δ	0	7	A15	ML8
97	IM6001-6C	1024	1	D	MPX	350n	860	75u%	18	0.0	2.0	17	3.0m♦		500 Δ	0	7	A15	ML99
98	IM6001-6D	1024	1	D	MPX	350n	860	75u%	18	0.0	2.0	17	3.0m♦		500 Δ	0	7	A15	ML8
99	MP5260D	1024	1	D	MPX	400n	625n	400m†	12	5.0	1.0	3.0	1.6m	.40	1.0mΔ	2	7	A108	ML122
100	MP5260N	1024	1	D	MPX	400n	625n	400m†	12	5.0	1.0	3.0	1.6m	.40	1.0mΔ	2	7	A108	ML2e
101	MP4260D	1024	1	D	MPX	450n	750n	400m†	12	5.0	1.0	3.0	1.6m	.40	1.0mΔ	5	C	A108	ML122
102	MP4260N	1024	1	D	MPX	450n	750n	400m†	12	5.0	1.0	3.0	1.6m	.40	1.0mΔ	5	C	A108	ML2e
103	TMS4023NC	1024	1	D	MPX	650n	900n		20	2.0	-21	-1.5	1.0uΔ		500 Δ	2	7	A75	DL24bu
104	TMS1103NC	1024	1	D	MXG	390n	580n	220m†	0.0	16	1.0	15	1.0uΔ		500 Δ	2	7	A2	DL18a
105	SYC1103A-X	1024	1	D	MXIØ	110n	300n	1.0 Ø	0.0	19	1.0	18	20m	.20	1.0kΔ	0	7	A381	DL18w
106	SYP1103A-X	1024	1	D	MXIØ	110n	300n	1.0 Ø	0.0	19	1.0	18	20m	.20	1.0kΔ	0	7	A381	DL18g
107	GXB100415	1024	1	S	BEX	13n	10n$	700m%	4.5	0.0	-.80	-1.8				0	7	B519	
108	HM2110-2	1024	1	S	BEX	20n	25n$	500u%	5.2	0.0	-1.4	-1.1	30mØ			0	7	A97b	DL16z
109	HM2110G-2	1024	1	S	BEX	20n	25n$	500u%	5.2	0.0	-1.4	-1.1	30mØ			0	7	A97b	DL16cd
110	MB7046H	1024	1	S	BEX	20n	12n$	500u%	5.2	0.0	-1.8Ø	-.81	30mØ			0	7	A331	DL16g

SYMBOLS AND CODES EXPLAINED IN INTERPRETER

2. READ-WRITE MEMORIES (RAMS)

IN ORDER OF (1)No.WORDS(2)No.BITS/WORD (3)MODE(4)STRUCT.(5)MAX ACC.TIME(6)TYPE No.

LINE No.	6 TYPE NUMBER	ORGANIZATION 1 NO. OF WORDS	2 BITS PER WORD	3 MODE	4 STRUC-TURE CODE	5 MAX. ACCESS TIME (S)	MAX. WRITE CYCLE TIME (S)	MAX. POWER DISS. (W)	POWER SUPPLY SPAN NEG. (V)	POWER SUPPLY SPAN POS. (V)	INPUT LOGIC LEVELS MAX. '0' (V)	INPUT LOGIC LEVELS MIN. '1' (V)	MIN.OUTPUT SINK CURRENT (A)	MIN.OUTPUT SINK CURRENT @ OUT (V)	MIN. CLOCK FREQ. (Hz)	OPER TEMP RNGE CODE -	OPER TEMP RNGE CODE +	DRAWINGS FUNCTIONAL EQUIVALENT NUMBER	DRAWINGS OUTLINE
1	HM2110G-1	1024	1	S	BEX	25n	25n$	500u%	5.2	0.0	-1.4	-1.1	30mØ			0	7	A97b	DL16cd
2	MCM10146F	1024	1	S	BEX	29n	25n$	754m	5.2	0.0	-1.4	-1.1	50mØ			0	7	A420	FL34
3	GXB10146	1024	1	S	BEX	35n			5.2	0.0						3	8		
4	HM2110G	1024	1	S	BEX	35n	25n$	500u%	5.2	0.0	-1.4	-1.1	30mØ			0	7	A97b	DL16cd
5	MB7046	1024	1	S	BEX	35n	25n$	500u%	5.2	0.0	-1.8*	-.84	30mØ			0	7	A331	DL16g
6	MBM10415AC	1024	1	S	BEX	35n		500u	5.0	0.0	-1.8	-.81Δ				0	7	A331	DL16g
7	MCM10546F	1024	1	S	BEX	40n	25n$	754m	5.2	0.0	-1.4	-1.1	50mØ			5	C	A420	FL34
8	MCM10546L	1024	1	S	BEX	40n	25n$	754m	5.2	0.0	-1.4	-1.1	50mØ			5	C	A420	DL16bm
9	95415DC	1024	1	S	BEX	45n	45n	520m†	5.2	0.0	-1.5	-1.1	30mØ	-1.1		0	7	A97	DL16au
10	MB7046N	1024	1	S	BEX	60n	35n$	820m	5.2	0.0	-1.8*	-.84				0	7	A97b	DL16u
11	MBM10415	1024	1	S	BEX	60n	35n$	820m	5.2	0.0	-1.8*	-.84				0	7	A97b	DL16u
12	10415FC	1024	1	S	BEX	65n	65n	500m†	5.2	0.0	-1.4	-1.1	30mØ	-1.0		0	7	A97b	FL14
13	IM55S08ACDE	1024	1	S	BTD	45n	35n$	550m†	0.0	5.0	.80	2.0Δ	16m	.45		0	7	PN16n	DLØ
14	IM55S08ACJE	1024	1	S	BTD	45n	35n$	550m†	0.0	5.0	.80	2.0Δ	16m	.45		0	7	PN16n	DL16cq
15	IM55S18ACDE	1024	1	S	BTD	45n	35n$	550m†	0.0	5.0	.80	2.0§	16m	.45		0	7	PN16n	DLØ
16	IM55S18ACJE	1024	1	S	BTD	45n	35n$	550m†	0.0	5.0	.80	2.0§	16m	.45		0	7	PN16n	DL16cq
17	SN74S214AJ	1024	1	S	BTD	45n	35n$	550m†	0.0	5.0	.80	2.0§	16m	.45		0	6	PN16am	DL16fh
18	SN74S214AN	1024	1	S	BTD	45n	35n$	550m†	0.0	5.0	.80	2.0§	16m	.45		0	6	PN16am	DL16ey
19	SN74S314AJ	1024	1	S	BTD	45n	35n$	550m†	0.0	5.0	.80	2.0Δ	16m	.45		0	6	PN16am	DL16fh
20	SN74S314AN	1024	1	S	BTD	45n	35n$	550m†	0.0	5.0	.80	2.0Δ	16m	.45		0	6	PN16am	DL16ey
21	N93L425F	1024	1	S	BTD	60n	45n$	325m	0.0	5.0	.85	2.1§	16m	.45		0	7	A242	DL16cv
22	RC82S11F	1024	1	S	BTD	60n	60n	775m	0.0	5.0	.80	2.0§	16m	.50		5	C	A242	DL16cv
23	S82S10F	1024	1	S	BTD	60n	60n	775m	0.0	5.0	.80	2.1Δ	16m	.50		5	C	A242	DL16cv
24	S82S11F	1024	1	S	BTD	60n	60n	775m	0.0	5.0	.80	2.0§	16m	.50		5	C	A242	DL16cv
25	IM55S08CDE	1024	1	S	BTD	70n	35n$	650m	0.0	5.0	.80	2.0Δ	16m	.45		0	7	PN16n	DLØ
26	IM55S08CJE	1024	1	S	BTD	70n	35n$	650m	0.0	5.0	.80	2.0Δ	16m	.45		0	7	PN16n	DL16cq
27	IM55S18CDE	1024	1	S	BTD	70n	35n$	650m	0.0	5.0	.80	2.0§	16m	.45		0	7	PN16n	DLØ
28	IM55S18CJE	1024	1	S	BTD	70n	35n$	650m	0.0	5.0	.80	2.0§	16m	.45		0	7	PN16n	DL16cq
29	S82LS10F	1024	1	S	BTD	70n	50n$	375m	0.0	5.0	.80	2.1Δ	16m	.50		5	C	A242	DL16cv
30	S82LS11F	1024	1	S	BTD	70n	50n$	375m	0.0	5.0	.80	2.1§	16m	.50		5	C	A242	DL16cv
31	S82S10N	1024	1	S	BTD	70n	50n$	850m	0.0	5.0	.80	2.1Δ	16m	.50		5	C	A242	DL16fm
32	S82S11N	1024	1	S	BTD	70n	50n$	850m	0.0	5.0	.80	2.1§	16m	.50		5	C	A242	DL16fm
33	SN74S214J	1024	1	S	BTD	70n	50n$	550m†	0.0	5.0	.80	2.0§	16m	.45		0	6	PN16am	DL16fh
34	SN74S214N	1024	1	S	BTD	70n	50n$	550m†	0.0	5.0	.80	2.0§	16m	.45		0	6	PN16am	DL16ey
35	SN74S314J	1024	1	S	BTD	70n	50n$	550m†	0.0	5.0	.80	2.0Δ	16m	.45		0	6	PN16am	DL16fh
36	SN74S314N	1024	1	S	BTD	70n	50n$	550m†	0.0	5.0	.80	2.0Δ	16m	.45		0	6	PN16am	DL16ey
37	IM55S08MDE	1024	1	S	BTD	75n	45n$	650m	0.0	5.0	.80	2.0Δ	16m	.45		5	C	PN16n	DLØ
38	IM55S08MJE	1024	1	S	BTD	75n	45n$	650m	0.0	5.0	.80	2.0Δ	16m	.45		5	C	PN16n	DL16cq
39	IM55S18MDE	1024	1	S	BTD	75n	45n$	650m	0.0	5.0	.80	2.0§	16m	.45		5	C	PN16n	DLØ
40	IM55S18MJE	1024	1	S	BTD	75n	45n$	650m	0.0	5.0	.80	2.0§	16m	.45		5	C	PN16n	DL16cq
41	SN54LS215J	1024	1	S	BTD	75n	75n$	200m†	0.0	5.0	.80	2.0§	16m	.50		5	C	PN16ak	DL16fh
42	SN54LS315J	1024	1	S	BTD	75n	75n$	200m†	0.0	5.0	.80	2.0Δ	16m	.50		5	C	PN16ak	DL16fh
43	SN54S214J	1024	1	S	BTD	75n	55n$	550m†	0.0	5.0	.80	2.0§	16m	.50		5	C	PN16am	DL16fh
44	SN54S314J	1024	1	S	BTD	75n	55n$	550m†	0.0	5.0	.80	2.0Δ	16m	.50		5	C	PN16am	DL16fh
45	SN74LS215J	1024	1	S	BTD	75n	60n$	200m†	0.0	5.0	.80	2.0§	16m	.50		0	6	PN16ak	DL16fh
46	SN74LS215N	1024	1	S	BTD	75n	60n$	200m†	0.0	5.0	.80	2.0§	16m	.50		0	6	PN16ak	DL16ey
47	SN74LS315J	1024	1	S	BTD	75n	60n$	200m†	0.0	5.0	.80	2.0Δ	16m	.50		0	6	PN16ak	DL16fh
48	SN74LS315N	1024	1	S	BTD	75n	60n$	200m†	0.0	5.0	.80	2.0Δ	16m	.50		0	6	PN16ak	DL16ey
49	SN74LS214J	1024	1	S	BTD	95n	60n$	200m†	0.0	5.0	.80	2.0§	16m	.50		0	6	PN16am	DL16fh
50	SN74LS214N	1024	1	S	BTD	95n	60n$	200m†	0.0	5.0	.80	2.0§	16m	.50		0	6	PN16am	DL16ey
51	SN74LS314J	1024	1	S	BTD	95n	60n$	200m†	0.0	5.0	.80	2.0Δ	16m	.50		0	6	PN16am	DL16fh
52	SN74LS314N	1024	1	S	BTD	95n	60n$	200m†	0.0	5.0	.80	2.0Δ	16m	.50		0	6	PN16am	DL16ey
53	SN54LS214J	1024	1	S	BTD	140n	75n$	200m†	0.0	5.0	.80	2.0§	16m	.50		5	C	PN16am	DL16fh
54	SN54LS314J	1024	1	S	BTD	140n	75n$	200m†	0.0	5.0	.80	2.0Δ	16m	.50		5	C	PN16am	DL16fh
55	RC5500M	1024	1	S	BTX	25n	35n$	409m	0.0	5.0	.80	2.0	16m	.45		0	7	A124	ML141
56	RC5500MP	1024	1	S	BTX	25n	35n$	409m	0.0	5.0	.80	2.0	16m	.45		0	7	A124	ML169
57	RM5500L	1024	1	S	BTX	25n	35n$	409m	0.0	5.0	.80	2.0	16m	.45		5	C	A124	FL25
58	RM5500M	1024	1	S	BTX	25n	35n$	409m	0.0	5.0	.80	2.0	16m	.45		5	C	A124	ML141
59	DM93415AJ	1024	1	S	BTX	30n		500u%†	0.0	5.0	.80	2.0				0	7	A256	DL16cr
60	DM93425AJ	1024	1	S	BTX	30n		500u%†	0.0	5.0	.80	2.0§				0	7	A163	DL16cr
61	MB7061H	1024	1	S	BTX	30n	20n$	500u%	0.0	5.0	.80	2.1Δ	16m	.45		0	7	A97	DL16g
62	MBM93415AH	1024	1	S	BTX	30n	20n$	500u%	0.0	5.0	.80	2.1Δ	16m	.45		0	7	A97	DL16g
63	HM2510G-2	1024	1	S	BTX	35n	25n$	775m	0.0	5.0	.80	2.1	16m	.45		0	7	A256	DL16cd
64	HM2511-2	1024	1	S	BTX	35n	25n$	775m	0.0	5.0	.80	2.1§	16m	.45		0	7	A163	DL16cd
65	RR5500L-PR	1024	1	S	BTX	35n	35n$	400m†	0.0	5.0	.85*	2.0	16m	.45		5	C	A124	FL14d
66	RR5500MM-PR	1024	1	S	BTX	35n	35n$	400m†	0.0	5.0	.85*	2.0	16m	.45		5	C	A124	ML141
67	RR5502MM-PR	1024	1	S	BTX	35n	35n$	400m†	0.0	5.0	.85*	2.0	16m	.45		0	7	A124	ML141
68	DM93415J	1024	1	S	BTX	40n		500u%†	0.0	5.0	.80	2.0				0	7	A256	DL16cr
69	DM93425J	1024	1	S	BTX	40n		500u%†	0.0	5.0	.80	2.0§				0	7	A163	DL16cr
70	93415AF	1024	1	S	BTX	45n	35n$	850m	0.0	5.0	.85	2.1Δ	16m	.45		0	7	A242	DL16cv
71	93415AI	1024	1	S	BTX	45n	45n	775m	0.0	5.0	.85	2.1Δ	16m	.45		0	7	A242	DL16p
72	93415AN	1024	1	S	BTX	45n	35n$	850m	0.0	5.0	.85	2.1Δ	16m	.45		0	7	A242	DL16fm
73	93425AF	1024	1	S	BTX	45n	35n$	850m	0.0	5.0	.85	2.1§	16m	.45		0	7	A242	DL16cv
74	93425AI	1024	1	S	BTX	45n	45n	775m	0.0	5.0	.85	2.1§	16m	.45		0	7	A242	DL16p
75	93425AN	1024	1	S	BTX	45n	35n$	850m	0.0	5.0	.85	2.1§	16m	.45		0	7	A242	DL16fm
76	HM2510G-1	1024	1	S	BTX	45n	35n$	775m	0.0	5.0	.80	2.1	16m	.45		0	7	A256	DL16cd
77	MB7061	1024	1	S	BTX	45n	30n$	500u%	0.0	5.0	.80	2.1Δ	16m	.45		0	7	A97	DL16g
78	MBM93415A	1024	1	S	BTX	45n	35n$	500u%	0.0	5.0	.80	2.1Δ	16m	.45		0	7	A97	DL16g
79	MCM93425PC	1024	1	S	BTX	45n	30n$	850m	0.0	5.0	.80	2.1§	16m	.45		0	7	A256	DL16ds
80	uPD2205D	1024	1	S	BTX	50n	60n$	775m	0.0	5.0	.80	2.0Δ	16m	.50		0	7	PN16n	DL16cw
81	FJB93415	1024	1	S	BTX	60n	30n$	512m†	0.0	5.0	.95	2.0	16m	.45		0	7	A97	ML4e
82	MCM93425FM	1024	1	S	BTX	60n	40n$	850m	0.0	5.0	.80	2.1§	16m	.45		5	C	A256	DL16ds
83	HM2510G	1024	1	S	BTX	70n	50n$	775m	0.0	5.0	.80	2.1	16m	.45		0	7	A256	DL16cd
84	RC82S11I	1024	1	S	BTX	70n	75n	850m	0.0	5.0	.80	2.1§	16m	.50		5	C	A242	DL16p
85	S82S10I	1024	1	S	BTX	70n	75n	850m	0.0	5.0	.80	2.1Δ	16m	.50		5	C	A242	DL16p
86	S82S11I	1024	1	S	BTX	70n	75n	850m	0.0	5.0	.80	2.1§	16m	.50		5	C	A242	DL16p
87	93L415CC	1024	1	S	BTX	75n	75n	175m†	0.0	5.0	.80	2.1	8.0m	.50		0	7	A97	DL16au
88	IM5508CDE	1024	1	S	BTX	85n	35n	625m	0.0	5.0	.80	2.0	16m	.45		0	7	PN18a	DL16b
89	IM5528CDE	1024	1	S	BTX	85n	35n	625m	0.0	5.0	.80	2.0	16m	.45		0	7	PN18a	DL16b
90	IM5508MDE	1024	1	S	BTX	100n	40n	625m	0.0	5.0	.80	2.0	16m	.45		5	C	PN18a	DL16b
91	IM5528MDE	1024	1	S	BTX	100n	40n	625m	0.0	5.0	.80	2.0	16m	.45		5	C	PN18a	DL16b
92	RAM18A#2	1024	1	S	BTX	180n	200n	2.2 †	5.0	5.0	.80	2.0	20m	.40		1	8	A58	PL3
93	RAM218A#2	1024	1	S	BTX	180n	155n	2.2 †	5.0	5.0	.80	2.0	30mØ			1	8	A58a	PL3
94	MK4102P-6	1024	1	S	BTX	275n	275n	400m♦	0.0	5.0	.65	2.2§	3.2	.40		0	7	A192	DL16i
95	MCM6518C-25	1024	1	S	HCG	200n	350nΔ		0.0	5.0	0.8	2.0	1.0u#Δ					A491	DL18bk
96	MCM6518P-25	1024	1	S	HCG	200n	350nΔ		0.0	5.0	0.8	2.0	1.0u#Δ			0	6	A491	DL18bm
97	MCM6508C-25	1024	1	S	HCG	250n	350nΔ		0.0	5.0	0.8	2.0	1.0u#Δ			0	6	A491	DL16bm
98	MCM6508P-25	1024	1	S	HCG	250n	350nΔ		0.0	5.0	0.8	2.0	1.0u#Δ			0	6	A491	DL16ds
99	MCM6508C-30	1024	1	S	HCG	300n	450nΔ		0.0	5.0	0.8	2.0	1.0u#Δ					A491	DL16bm
100	MCM6518C-30	1024	1	S	HCG	300n	450nΔ		0.0	5.0	0.8	2.0	1.0u#Δ					A491	DL18bk
101	MCM6518P-30	1024	1	S	HCG	300n	450nΔ		0.0	5.0	0.8	2.0	1.0u#Δ			0	6	A491	DL18bm
102	MCM6508P-30	1024	1	S	HCG	350n	450nΔ		0.0	5.0	0.8	2.0	1.0u#Δ			0	6	A491	DL16ds
103	MCM6508C-46	1024	1	S	HCG	460n	730nΔ		0.0	5.0	0.8	2.0	1.0u#Δ					A491	DL16bm
104	MCM6508P-46	1024	1	S	HCG	460n	730nΔ		0.0	5.0	0.8	2.0	1.0u#Δ			0	6	A491	DL16ds
105	MCM6518P-46	1024	1	S	HCG	460n	730nΔ		0.0	5.0	0.8	2.0	1.0u#Δ			0	6	A491	DL18bm
106	CM2403	1024	1	S	HXX	400n	600n	400u%†	0.0	5.0	.80	2.0	16m	.40		0	7	A25	ML11
107	SIL1902	1024	1	S	MCA	800n	750n	1.5	0.0	5.0	.80	3.5	1.6mØ	.40		0	7	A185	MO001AF
108	HM6508-9	1024	1	S	MCG			20m	0.0	5.0	.80	3.0				4	8	A402	
109	HM6518-9	1024	1	S	MCG			20m	0.0	5.0	.80	3.0				4	8	A405	
110	HM6518B9	1024	1	S	MCG			20m	0.0	5.0	.80	3.0				4	8	A405	

SYMBOLS AND CODES EXPLAINED IN INTERPRETER

2. READ-WRITE MEMORIES (RAMS)

IN ORDER OF (1)No.WORDS(2)No.BITS/WORD (3)MODE(4)STRUCT.(5)MAX ACC.TIME(6)TYPE No.

LINE No.	6 TYPE NUMBER	ORGANIZATION 1 NO. OF WORDS	2 BITS PER WORD	3 MODE	4 STRUCTURE CODE	5 MAX. ACCESS TIME (S)	MAX. WRITE CYCLE TIME (S)	MAX. POWER DISS. (W)	POWER SUPPLY SPAN NEG. (V)	POS. (V)	INPUT LOGIC LEVELS MAX. '0' (V)	MIN. '1' (V)	MIN.OUTPUT SINK CURRENT (A)	@ OUT (V)	MIN. CLOCK FREQ. (Hz)	OPER TEMP RNGE CODE -	+	DRAWINGS FUNCTIONAL EQUIVALENT NUMBER	OUTLINE
1	IM5608A-1ID	1024	1	S	MCG	95n		5.0u†♦	0.0	11	.80	9.0§	1.0uΔ			4	8	A405	DL16aj
2	IM5608A-1IJ	1024	1	S	MCG	95n		5.0u†♦	0.0	11	.80	9.0§	1.0uΔ			4	8	A405	DL16ej
3	IM5608A-1MD	1024	1	S	MCG	95n		5.0u†♦	0.0	11	.80	9.0§	1.0uΔ			5	C	A405	DL16aj
4	IM5608A-1MF	1024	1	S	MCG	95n		5.0u†♦	0.0	11	.80	9.0§	1.0uΔ			5	C	A405	FL76
5	IM5608A-1MS	1024	1	S	MCG	95n		5.0u†♦	0.0	11	.80	9.0§	1.0uΔ			5	C	A405	DL16ej
6	IM6508A-1IDE	1024	1	S	MCG	95n	65n$	1.1m♦	0.0	11	2.2	7.7§	1.0uΔ	0.0		4	8	A402	DL16b
7	IM6508A-1MDE	1024	1	S	MCG	95n	65n$	1.1m♦	0.0	11	2.2	7.7§	1.0uΔ	0.0		5	C	A402	DL16b
8	IM6518A-1ID	1024	1	S	MCG	95n		5.0u†♦	0.0	11	.80	9.0§	1.0uΔ			4	8	A405	DL18ap
9	IM6518A-1IDE	1024	1	S	MCG	95n	65n$	500u♦	0.0	11	2.2	7.7§	1.0uΔ	0.0		4	8	A405	DL16b
10	IM6518A-1IJ	1024	1	S	MCG	95n		5.0u†♦	0.0	11	.80	9.0§	1.0uΔ			4	8	A405	DL18bn
11	IM6518A-1MD	1024	1	S	MCG	95n		5.0u†♦	0.0	11	.80	9.0§	1.0uΔ			5	C	A405	DL18ap
12	IM6518A-1MDE	1024	1	S	MCG	95n	65n$	500u♦	0.0	11	2.2	7.7§	1.0uΔ	0.0		5	C	A405	DL16b
13	IM6518A-1MF	1024	1	S	MCG	95n		5.0u†♦	0.0	11	.80	9.0§	1.0uΔ			5	C	A405	FL77
14	IM6518A-1MS	1024	1	S	MCG	95n		5.0u†♦	0.0	11	.80	9.0§	1.0uΔ			5	C	A405	DL18bn
15	NMC6508AJ-9	1024	1	S	MCG	140n	240n	50u♦	0.0	5.0	.80	3.0	3.2m	.40		4	8	A402	
16	IM5608AID	1024	1	S	MCG	150n		5.0u†♦	0.0	11	.80	9.0§	1.0uΔ			4	8	A405	DL16aj
17	IM5608AIJ	1024	1	S	MCG	150n		5.0u†♦	0.0	11	.80	9.0§	1.0uΔ			4	8	A405	DL16ej
18	IM5608AMD	1024	1	S	MCG	150n		5.0u†♦	0.0	11	.80	9.0§	1.0uΔ			5	C	A405	DL16aj
19	IM5608AMF	1024	1	S	MCG	150n		5.0u†♦	0.0	11	.80	9.0§	1.0uΔ			5	C	A405	FL76
20	IM5608AMJ	1024	1	S	MCG	150n		5.0u†♦	0.0	11	.80	9.0§	1.0uΔ			5	C	A405	DL16ej
21	IM6508AIDE	1024	1	S	MCG	150n	95n$	5.5m♦	0.0	11	2.2	7.7§	1.0uΔ	0.0		4	8	A402	DL16b
22	IM6508AMDE	1024	1	S	MCG	150n	95n$	5.5m♦	0.0	11	2.2	7.7§	1.0uΔ	0.0		5	C	A402	DL16b
23	IM6518A-1IDN	1024	1	S	MCG	150n	95n$	1.1m♦	0.0	11	2.2	7.7§	1.0uΔ	0.0		4	8	A405	DL18as
24	IM6518A-1MDN	1024	1	S	MCG	150n	95n$	1.1m♦	0.0	11	2.2	7.7§	1.0uΔ	0.0		5	C	A405	DL18as
25	IM6518AID	1024	1	S	MCG	150n		5.0u†♦	0.0	11	.80	9.0§	1.0uΔ			4	8	A405	DL18ap
26	IM6518AIDE	1024	1	S	MCG	150n	95n$	2.5m	0.0	11	2.2	7.7§	1.0uΔ	0.0		4	8	A405	DL16b
27	IM6518AIDN	1024	1	S	MCG	150n	65n$	5.5m♦	0.0	11	2.2	7.7§	1.0uΔ	0.0		4	8	A405	DL18as
28	IM6518AIJ	1024	1	S	MCG	150n		5.0u†♦	0.0	11	.80	9.0§	1.0uΔ			4	8	A405	DL18bn
29	IM6518AMD	1024	1	S	MCG	150n		5.0u†♦	0.0	11	.80	9.0§	1.0uΔ			5	C	A405	DL18ap
30	IM6518AMDE	1024	1	S	MCG	150n	95n$	2.5m	0.0	11	2.2	7.7§	1.0uΔ	0.0		5	C	A405	DL16b
31	IM6518AMDN	1024	1	S	MCG	150n	65n$	5.5m♦	0.0	11	2.2	7.7§	1.0uΔ	0.0		5	C	A405	DL18as
32	IM6518AMF	1024	1	S	MCG	150n		5.0u†♦	0.0	11	.80	9.0§	1.0uΔ			5	C	A405	FL77
33	IM6518AMJ	1024	1	S	MCG	150n		5.0u†♦	0.0	11	.80	9.0§	1.0uΔ			5	C	A405	DL18bn
34	S6508AC	1024	1	S	MCG	185n			0.0	10	2.0	7.0				0	6	A461	DL16gu
35	S6508ACI	1024	1	S	MCG	185n			0.0	10	2.0	7.0				3	8	A461	DL16gu
36	S6508ACM	1024	1	S	MCG	185n			0.0	10	2.0	7.0				5	C	A461	DL16gu
37	S6508AE	1024	1	S	MCG	185n			0.0	10	2.0	7.0				0	6	A461	DL16gt
38	S6508AEI	1024	1	S	MCG	185n			0.0	10	2.0	7.0				3	8	A461	DL16gt
39	S6508AP	1024	1	S	MCG	185n			0.0	10	2.0	7.0				0	6	A461	DL16gs
40	S6508API	1024	1	S	MCG	185n			0.0	10	2.0	7.0				3	8	A461	DL16gs
41	IM6508-1IDE	1024	1	S	MCG	200n	165n$	50u♦	0.0	5.0	.80	3.0§	2.0m	.45		4	8	A402	DL16b
42	IM6508-1IDN	1024	1	S	MCG	200n	165n$	50u♦	0.0	5.0	.80	3.0§	2.0m	.45		4	8	A402	DL18as
43	IM6508-1MDE	1024	1	S	MCG	200n	165n$	50u♦	0.0	5.0	.80	3.0§	2.0m	.45		5	C	A402	DL16b
44	IM6508-1MDN	1024	1	S	MCG	200n	165n$	50u♦	0.0	5.0	.80	3.0§	2.0m	.45		5	C	A402	DL18as
45	IM6508A-1IDN	1024	1	S	MCG	200n	65n$	1.1m♦	0.0	11	2.2	7.7§	1.0uΔ	0.0		4	8	A402	DL18as
46	IM6508A-1MDN	1024	1	S	MCG	200n	65n$	1.1m♦	0.0	11	2.2	7.7§	1.0uΔ	0.0		5	C	A402	DL18as
47	uPD443/6508D-1	1024	1	S	MCG	250n		500u	0.0	5.0	.80	2.0				0	7		
48	S6518A-1	1024	1	S	MCG	275n	275n	21m	0.0	10	2.0	7.0§	2.0m	.45		0	7	A423	DLØ
49	IM5608-1ID	1024	1	S	MCG	300n		5.0u†♦	0.0	5.0	.80	3.0§	1.0uΔ			4	8	A405	DL16aj
50	IM5608-1IJ	1024	1	S	MCG	300n		5.0u†♦	0.0	5.0	.80	3.0§	1.0uΔ			4	8	A405	DL16ej
51	IM5608-1MD	1024	1	S	MCG	300n		5.0u†♦	0.0	5.0	.80	3.0§	1.0uΔ			5	C	A405	DL16aj
52	IM5608-1MF	1024	1	S	MCG	300n		5.0u†♦	0.0	5.0	.80	3.0§	1.0uΔ			5	C	A405	FL76
53	IM5608-1MJ	1024	1	S	MCG	300n		5.0u†♦	0.0	5.0	.80	3.0§	1.0uΔ			5	C	A405	DL16ej
54	IM6518-1IDE	1024	1	S	MCG	300n	200n$	50u	0.0	5.0	.80	3.0§	2.0m	.45		4	8	A405	DL16b
55	IM6518-1IDN	1024	1	S	MCG	300n	200n$	50u♦	0.0	5.0	.80	3.0§	2.0m	.45		4	8	A405	DL18as
56	IM6518-1MDE	1024	1	S	MCG	300n	200n$	50u♦	0.0	5.0	.80	3.0§	2.0m	.45		5	C	A405	DL16b
57	IM6518-1MDN	1024	1	S	MCG	300n	200n$	50u♦	0.0	5.0	.80	3.0§	2.0m	.45		5	C	A405	DL18as
58	MCM146508-1L	1024	1	S	MCG	300n	500n	5.0u♦†	0.0	5.0	.80	3.0§	2.0m	.40		4	8	A402	DL16bm
59	MCM146508-1P	1024	1	S	MCG	300n	500n	5.0u♦†	0.0	5.0	.80	3.0§	2.0m	.40		4	8	A402	DL16ds
60	MCM146508-2L	1024	1	S	MCG	300n	500n	5.0u♦†	0.0	5.0	.40%	2.4§	2.0m	.40		5	C	A402	DL16bm
61	MCM146518-1L	1024	1	S	MCG	300n	500n	5.0u♦†	0.0	5.0	.80	3.0§	2.0m	.40		4	8	A405	DL18an
62	MCM146518-1P	1024	1	S	MCG	300n	500n	5.0u♦†	0.0	5.0	.80	3.0§	2.0m	.40		4	8	A405	DL18bp
63	MCM146518-2L	1024	1	S	MCG	300n	500n	5.0u♦†	0.0	5.0	.40%	2.4§	2.0m	.40		5	C	A405	DL18an
64	S6508-1C	1024	1	S	MCG	300n			0.0	5.0	0.8	3.0				0	6	A461	DL16gu
65	S6508-1CI	1024	1	S	MCG	300n			0.0	5.0	0.8	3.0				3	8	A461	DL16gu
66	S6508-1CM	1024	1	S	MCG	300n			0.0	5.0	0.8	3.0				5	C	A461	DL16gu
67	S6508-1E	1024	1	S	MCG	300n			0.0	5.0	0.8	3.0				0	6	A461	DL16gt
68	S6508-1EI	1024	1	S	MCG	300n			0.0	5.0	0.8	3.0				3	8	A461	DL16gt
69	S6508-1P	1024	1	S	MCG	300n			0.0	5.0	0.8	3.0				0	6	A461	DL16gs
70	S6508-1PI	1024	1	S	MCG	300n			0.0	5.0	0.8	3.0				3	8	A461	DL16gs
71	S6508CI	1024	1	S	MCG	300n			0.0	5.0	0.8	3.0				3	8	A461	DL16gu
72	S6508CM	1024	1	S	MCG	300n			0.0	5.0	0.8	3.0				5	C	A461	DL16gu
73	S6508EI	1024	1	S	MCG	300n			0.0	5.0	0.8	3.0				3	8	A461	DL16gt
74	S6508PI	1024	1	S	MCG	300n			0.0	5.0	0.8	3.0				3	8	A461	DL16gs
75	S6518-1	1024	1	S	MCG	300n	300n	10m	0.0	5.0	.80	3.0§	2.0m	.45		0	7	A423	DLØ
76	uPD443C-1	1024	1	S	MCG	300n	165n$	500u	0.0	5.0	.80	3.0	2.0m	.45		4	8	A256	DL16fd
77	uPD443D-1	1024	1	S	MCG	300n	165n$	500u	0.0	5.0	.80	3.0	2.0m	.45		4	8	A256	DL16es
78	IM6508AIDN	1024	1	S	MCG	350n	95n$	5.5m♦	0.0	11	2.2	7.7§	1.0uΔ	0.0		4	8	A402	DL18as
79	IM6508AMDN	1024	1	S	MCG	350n	95n$	5.5m♦	0.0	11	2.2	7.7§	2.0m	.45		5	C	A402	DL18as
80	TC5508P	1024	1	S	MCG	370n	450n	55m	0.0	5.0	0.8	2.5	2.0m	.40		3	8	A520	DL16fd
81	HM435101-1	1024	1	S	MCG	450n	450n	55m†	0.0	5.0	.65	2.2§	2.0m	.40		0	7	A267a	ML77g
82	TC5508P-4	1024	1	S	MCG	450n	550n	55m	0.0	5.0	0.8	2.5	2.0m	0.4		3	8	A520	DL16fd
83	uPD443C	1024	1	S	MCG	450n	300n$	500u	0.0	5.0	.80	3.0	2.0m	.45		4	8	A256	DL16fd
84	uPD443D	1024	1	S	MCG	450n	300n$	500u	0.0	5.0	.80	3.0	2.0m	.45		4	8	A256	DL16es
85	IM5608ID	1024	1	S	MCG	460n		5.0u†♦	0.0	5.0	.80	3.0§	5.0uΔ			4	8	A405	DL16aj
86	IM5608IJ	1024	1	S	MCG	460n		5.0u†♦	0.0	5.0	.80	3.0§	5.0uΔ			4	8	A405	DL16ej
87	IM5608IP	1024	1	S	MCG	460n		5.0u†♦	0.0	5.0	.80	3.0§	5.0uΔ			4	8	A405	DL16bn
88	IM5608MD	1024	1	S	MCG	460n		5.0u†♦	0.0	5.0	.80	3.0§	1.0uΔ			5	C	A405	DL16aj
89	IM5608MF	1024	1	S	MCG	460n		5.0u†♦	0.0	5.0	.80	3.0§	1.0uΔ			5	C	A405	FL76
90	IM5608MJ	1024	1	S	MCG	460n		5.0u†♦	0.0	5.0	.80	3.0§	1.0uΔ			5	C	A405	DL16ej
91	IM6508IDN	1024	1	S	MCG	460n	300n$	500u♦	0.0	5.0	.80	3.0§	2.0m	.45		4	8	A402	DL18as
92	IM6508MDE	1024	1	S	MCG	460n	300n$	500u♦	0.0	5.0	.80	3.0§	2.0m	.45		5	C	A402	DL16b
93	IM6508MDN	1024	1	S	MCG	460n	300n$	500u♦	0.0	5.0	.80	3.0§	1.0uΔ	0.0		5	C	A402	DL18as
94	IM6518ID	1024	1	S	MCG	460n		5.0u†♦	0.0	5.0	.80	3.0§	5.0uΔ			4	8	A405	DL18ap
95	IM6518IDE	1024	1	S	MCG	460n	300n$	500u♦	0.0	5.0	.80	3.0§	2.0m	.45		4	8	A405	DL16b
96	IM6518IDN	1024	1	S	MCG	460n	300n$	500u♦	0.0	5.0	.80	3.0§	2.0m	.45		4	8	A405	DL18as
97	IM6518IJ	1024	1	S	MCG	460n		5.0u†♦	0.0	5.0	.80	3.0§	5.0uΔ			4	8	A405	DL18bn
98	IM6518IP	1024	1	S	MCG	460n		5.0u†♦	0.0	5.0	.80	3.0§	5.0uΔ			4	8	A405	DL18t
99	IM6518MD	1024	1	S	MCG	460n		5.0u†♦	0.0	5.0	.80	3.0§	1.0uΔ			5	C	A405	DL18ap
100	IM6518MDE	1024	1	S	MCG	460n	300n$	500u♦	0.0	5.0	.80	3.0§	2.0m	.45		5	C	A405	DL16b
101	IM6518MDN	1024	1	S	MCG	460n	300n$	500u♦	0.0	5.0	.80	3.0§	2.0m	.45		5	C	A405	DL18as
102	IM6518MF	1024	1	S	MCG	460n		5.0u†♦	0.0	5.0	.80	3.0§	1.0uΔ			5	C	A405	FL77
103	IM6518MJ	1024	1	S	MCG	460n		5.0u†♦	0.0	5.0	.80	3.0§	1.0uΔ			5	C	A405	DL18bn
104	MCM146508L	1024	1	S	MCG	460n	760n	25u♦†	0.0	5.0	.80	3.0§	2.0m	.40		4	8	A402	DL16bm
105	MCM146508P	1024	1	S	MCG	460n	760n	25u♦†	0.0	5.0	.80	3.0§	2.0m	.40		4	8	A402	DL16ds
106	MCM146518L	1024	1	S	MCG	460n	760n	25u♦†	0.0	5.0	.80	3.0§	2.0m	.40		4	8	A405	DL18an
107	MCM146518P	1024	1	S	MCG	460n	760n	25u♦†	0.0	5.0	.80	3.0§	2.0m	.40		4	8	A405	DL18bp
108	S6508C	1024	1	S	MCG	460n			0.0	5.0	0.8	3.0				0	6	A461	DL16gu
109	S6508E	1024	1	S	MCG	460n			0.0	5.0	0.8	3.0				0	6	A461	DL16gt

SYMBOLS AND CODES EXPLAINED IN INTERPRETER

2. READ-WRITE MEMORIES (RAMS)

IN ORDER OF (1)No.WORDS(2)No.BITS/WORD (3)MODE(4)STRUCT.(5)MAX ACC.TIME(6)TYPE No.

MEMORY

LINE No.	6 TYPE NUMBER	ORGANIZATION 1 NO. OF WORDS	2 BITS PER WORD	3 MODE	4 STRUC-TURE CODE	5 MAX. ACCESS TIME (S)	MAX. WRITE CYCLE TIME (S)	MAX. POWER DISS. (W)	POWER SUPPLY SPAN NEG. (V)	POS. (V)	INPUT LOGIC LEVELS MAX. '0' (V)	MIN. '1' (V)	MIN.OUTPUT SINK CURRENT (A)	@ OUT (V)	MIN. CLOCK FREQ. (Hz)	OPER TEMP RNGE CODE -	+	DRAWINGS FUNCTIONAL EQUIVALENT NUMBER	OUTLINE
1	S6508P	1024	1	S	MCG	460n			0.0	5.0	0.8	3.0				0	6	A461	DL16gs
2	S6518	1024	1	S	MCG	460n	460n	10m	0.0	5.0	.80	3.0§	2.0m	.45		0	7	A423	DL∅
3	S6518A	1024	1	S	MCG	460n	460n	21m	0.0	10	2.0	7.0§	2.0m	.45		0	7	A423	DL∅
4	HM1-6508D5	1024	1	S	MCG	550n	150n$	4.0m♦	0.0	5.0	.80	3.0§	3.2m	.45		0	7	A258	DL16aa
5	HM1-6518D5	1024	1	S	MCG	550n	150n$	4.0m♦	0.0	5.0	.80	3.0§	3.2m	.45		0	7	A258	ML115b
6	TC5508P-1	1024	1	S	MCG	550n	700n	55m	0.0	5.0	0.8	2.5	2.0m	0.4		3	8	A520	DL16fd
7	IM5608CJ	1024	1	S	MCG	600n		5.0u†♦	0.0	5.0	.80	3.0§	5.0u△			0	7	A405	DL16ej
8	IM5608CP	1024	1	S	MCG	600n		5.0u†♦	0.0	5.0	.80	3.0§	5.0u△			0	7	A405	DL16bn
9	IM6508CPE	1024	1	S	MCG	600n	395n$	8.0m	0.0	5.0	.80	3.0§	1.6m	.45		0	7	A402	DL16bv
10	IM6518CJ	1024	1	S	MCG	600n		5.0u†♦	0.0	5.0	.80	3.0§	5.0u△			0	7	A405	DL18bn
11	IM6518CP	1024	1	S	MCG	600n		5.0u†♦	0.0	5.0	.80	3.0§	5.0u△			0	7	A405	DL18t
12	IM6518CPN	1024	1	S	MCG	600n	395n$	8.0m	0.0	5.0	.80	3.0§	1.6m	.45		0	7	A405	DL18i
13	HM435101	1024	1	S	MCG	650n	650n	55m†	0.0	5.0	.65	2.2§	2.0m	.40		0	7	A267a	ML77g
14	HM435101-V	1024	1	S	MCG	650n	650n	37u♦	0.0	5.0	.65	2.2§	2.0m	.40		0	7	A267a	ML77g
15	SYC5102-3	1024	1	S	MCI	650n	650n	1.0 ∅	0.0	5.0	.80	2.0§	2.0m	.40		0	7	A118	ML1c
16	SYC5102L-3	1024	1	S	MCI	650n	650n	1.0 ∅	0.0	5.0	.80	2.0§	2.0m	.40		0	7	A118	ML1c
17	SYP5102-3	1024	1	S	MCI	650n	650n	1.0 ∅	0.0	5.0	.80	2.0§	2.0m	.40		0	7	A118	DL16fc
18	SYP5102L-3	1024	1	S	MCI	650n	650n	1.0 ∅	0.0	5.0	.80	2.0§	2.0m	.40		0	7	A118	DL16fc
19	MWS5501D	1024	1	S	MCS	90n	90n	5.2m♦	0.0	10	.10%	9.9	4.0m	.40		4	8	A251	DL16r
20	MWS5501H	1024	1	S	MCS	90n	90n	5.2m♦	0.0	10	.10%	9.9	4.0m	.40		4	8	A251	CH∅
21	MWS5001D	1024	1	S	MCS	150n	150n	5.2m♦	0.0	5.0	.10%	4.9	4.0m†	.40		4	8	A251	DL16r
22	MWS5001H	1024	1	S	MCS	150n	150n	5.2m♦	0.0	5.0	.10%	4.9	4.0m†	.40		4	8	A251	CH∅
23	CDP1821SCD	1024	1	S	MCS	350n	150n$	8.0m	0.5	7.0	.01%	4.9	3.5m	.50		2	8	A498	DL16r
24	CDP1821SD	1024	1	S	MCS	350n	150n$	5.0m	0.5	11	.01%	4.9	3.5m	.50		2	8	A498	DL16r
25	MB8401H	1024	1	S	MCX	165n	165n	16m	0.0	5.0	.80	2.0	3.2m	.45		4	8	A258	DL∅
26	MB8411H	1024	1	S	MCX	165n	165n	16m	0.0	5.0	.80	2.0	3.2m	.45		4	8	A258	DL∅
27	MBC6508A	1024	1	S	MCX	185n	760n	11m	0.0	5.0	0.8	2.5	2.0m	0.45		5	C		
28	S6508A-1	1024	1	S	MCX	275n	275n	21m	0.0	10	2.0	7.0§	2.0m	.45		0	7	A461	DL16ar
29	MB8401E	1024	1	S	MCX	290n	500n	50u♦	0.0	8.0	.80	2.0§	3.2m	.45		4	8	A258	DL16g
30	MB8411E	1024	1	S	MCX	290n	500n	50u♦	0.0	8.0	.80	2.0§	3.2m	.45		4	8	A258	ML134b
31	S6508-1	1024	1	S	MCX	300n	300n	10m	0.0	5.0	.80	3.0§	2.0m	.45		0	7	A461	DL16ar
32	S6508A-2E	1024	1	S	MCX	300n	465n	50m†	0.0	5.0								A405	DL16bt
33	S6508A-4E	1024	1	S	MCX	300n	465n	50m†	0.0	5.0								A405	DL16e
34	SCM21C02-1AC	1024	1	S	MCX	350n	350n	300m	0.0	5.0	.65	2.2§	2.0m	0.4		5	C	A118	DL16hb
35	SCM21C02-1AD	1024	1	S	MCX	350n	350n	300m	0.0	5.0	.65	2.2§	2.0m	0.4		5	C	A118	DL16∅
36	SCM21C02-1AE	1024	1	S	MCX	350n	350n	300m	0.0	5.0	.65	2.2§	2.0m	0.4		0	7	A118	DL16he
37	SCM21C02-1AH	1024	1	S	MCX	350n	350n	300m	0.0	5.0	.65	2.2§	2.0m	0.4		5	C	A118	CH∅
38	SCM5102-1A	1024	1	S	MCX	350n	350n	300m	0.0	5.0	0.65	2.2§	1.0u△			0	7	A350	
39	MB8401N	1024	1	S	MCX	450n	760n	500u♦	0.0	8.0	.80	2.0§	3.2m	.45		4	8	A258	DL16g
40	MB8411N	1024	1	S	MCX	450n	760n	500u♦	0.0	8.0	.80	2.0§	3.2m	.45		4	8	A258	ML134b
41	SCM21C02-1C	1024	1	S	MCX	450n	450n	300m	0.0	5.0	.65	2.2§	2.0m	0.4		5	C	A118	DL16hb
42	SCM21C02-1D	1024	1	S	MCX	450n	450n	300m	0.0	5.0	.65	2.2§	2.0m	0.4		5	C	A118	DL16∅
43	SCM21C02-1E	1024	1	S	MCX	450n	450n	300m	0.0	5.0	.65	2.2§	2.0m	0.4		0	7	A118	DL16he
44	SCM21C02-1H	1024	1	S	MCX	450n	450n	300m	0.0	5.0	.65	2.2§	2.0m	0.4		5	C	A118	CH∅
45	SCM5102-1	1024	1	S	MCX	450n	450n	135m	0.0	5.0	.80	2.0§	2.0m	.40		0	7	A530	DL∅
46	S6508	1024	1	S	MCX	460n	460n	10m	0.0	5.0	.80	3.0§	2.0m	.45		0	7	A461	DL16ar
47	S6508-2E	1024	1	S	MCX	460n	730n	50m†	0.0	5.0								A405	DL16bt
48	S6508-4E	1024	1	S	MCX	460n	730n	50m†	0.0	5.0								A405	DL16e
49	S6508A	1024	1	S	MCX	460n	460n	21m	0.0	10	2.0	7.0§	2.0m	.45		0	7	A461	DL16ar
50	4736BDC	1024	1	S	MCX	500n	180n$	1.3m♦	0.0	5.0	1.5	3.5§	400u	.40		4	8	A344	DL16df
51	4736BDM	1024	1	S	MCX	500n	180n$	1.3m♦	0.0	5.0	1.5	3.5§	400u	.40		5	C	A344	DL16df
52	4736BFC	1024	1	S	MCX	500n	180n$	1.3m♦	0.0	5.0	1.5	3.5§	400u	.40		4	8	A344	FL14j
53	4736BFM	1024	1	S	MCX	500n	180n$	1.3m♦	0.0	5.0	1.5	3.5§	400u	.40		5	C	A344	FL14j
54	4736BPC	1024	1	S	MCX	500n	180n$	1.3m♦	0.0	5.0	1.5	3.5§	400u	.40		4	8	A344	DL16dh
55	SCM21C02-3C	1024	1	S	MCX	650n	650n	300m	0.0	5.0	.65	2.2§	2.0m	0.4		5	C	A118	DL16hb
56	SCM21C02-3E	1024	1	S	MCX	650n	650n	300m	0.0	5.0	.65	2.2§	2.0m	0.4		0	7	A118	DL16he
57	SCM21C02-3H	1024	1	S	MCX	650n	650n	300m	0.0	5.0	.65	2.2§	2.0m	0.4		5	C	A118	CH∅
58	SCM5102-3	1024	1	S	MCX	650n	650n	135m	0.0	5.0	.80	2.0§	2.0m	.40		0	7	A530	DL∅
59	SCM21C02-8C	1024	1	S	MCX	800n	800n	300m	0.0	5.0	.65	2.2§	2.0m	0.4		5	C	A118	DL16hb
60	SCM21C02-8D	1024	1	S	MCX	800n	800n	300m	0.0	5.0	.65	2.2§	2.0m	0.4		5	C	A118	DL16∅
61	SCM21C02-8E	1024	1	S	MCX	800n	800n	300m	0.0	5.0	.65	2.2§	2.0m	0.4		0	7	A118	DL16he
62	SCM21C02-8H	1024	1	S	MCX	800n	800n	300m	0.0	5.0	.65	2.2§	2.0m	0.4		5	C	A118	CH∅
63	SCM5102-8	1024	1	S	MCX	800n	800n	150m	0.0	5.0	.80	2.0§	2.0m	.40		0	7	A380	DL∅
64	HEF4736	1024	1	S	MCX	600		65m								0	7		
65	MCM7001L	1024	1	S	MNA	55n	180n	640uØ	0.0	15	.80	4.0	11m	4.0		0	7	A149	ML97
66	1218C	1024	1	S	MNA	60n	180n	300m	3.5	15	1.0	4.0	200u			0	7	A149a	ML162
67	MCM7001L1	1024	1	S	MNA	75n	180n	640uØ	0.0	15	.80	4.0	11m	4.0		0	7	A149	ML97
68	1218B	1024	1	S	MNA	80n	180n	300m	3.5	15	1.0	4.0	200u			0	7	A149a	ML162
69	1217C	1024	1	S	MNA	90n	200n	300m	3.5	15	1.0	4.0§	1.6m	.50		0	7	A149a	ML162
70	1218A	1024	1	S	MNA	100n	225n	875m	3.5	15	1.0	4.0	200u			0	7	A149a	ML162
71	1217B	1024	1	S	MNA	110n	250n	300m	3.5	15	1.0	4.0§	1.6m	.50		0	7	A149a	ML162
72	1218	1024	1	S	MNA	120n	275n	875m	3.5	15	1.0	4.0	200u			0	7	A149a	ML162
73	1217A	1024	1	S	MNA	135n	300n	904m	3.5	15	1.0	4.0§	1.6m	.50		0	7	A149a	ML162
74	1217	1024	1	S	MNA	160n	375n	875m	3.5	15	1.0	4.0§	1.6m	.50		0	7	A149a	ML162
75	1216	1024	1	S	MNA	260n	675n	715m	4.4	15	1.0	4.0§	600u	.50		0	7	A149a	ML162
76	AM9102EDC	1024	1	S	MNG		200n△	250m	0.0	5.0	.80	2.0				0	7		
77	AM9102EPC	1024	1	S	MNG		200n△	250m	0.0	5.0	.80	2.0				0	7		
78	MCM2115AL	1024	1	S	MNG				0.0	5.0		△						A256	DL16ai
79	MCM2125AL	1024	1	S	MNG				0.0	5.0		§						A256	DL16ai
80	HM2112A	1024	1	S	MNG	7.5n	6.0n	150m	0.0	5.0	1475	810	30m∅			0	7	A97b	DL∅
81	HM2112B	1024	1	S	MNG	7.5n	6.0n	150m	0.0	5.0	1850	1105	30m∅			0	7	A97b	DL∅
82	C2115A	1024	1	S	MNG	45n	35n$	625m	0.0	5.0	.80	2.1	16m	.45		0	7	A256	DL16∅
83	C2115AL	1024	1	S	MNG	45n	30n$	394m	0.0	5.0	.80	2.1	16m	.45		0	7	A256	DL16∅
84	C2125A	1024	1	S	MNG	45n	35n$	625m	0.0	5.0	.80	2.1§	7.0m	.45		0	7	A256	DL16∅
85	C2125AL	1024	1	S	MNG	45n	30n$	394m	0.0	5.0	.80	2.1§	7.0m	.45		0	7	A256	DL16∅
86	MB8115Y	1024	1	S	MNG	45n	30n$	325m♦	0.0	5.0	.80	2.1△	16m	.45		0	7	A256a	DL16g
87	MB8125Y	1024	1	S	MNG	45n	30n$	325m♦	0.0	5.0	.80	2.1§	16m	.45		0	7	A256a	DL16g
88	MBM2115Y	1024	1	S	MNG	45n	30n$	625m♦	0.0	5.0	.80	2.1△	16m	.45		0	7	A256a	DL16g
89	MBM2125Y	1024	1	S	MNG	45n	30n$	625m♦	0.0	5.0	.80	2.1§	16m	.45		0	7	A256a	DL16g
90	MCM21L15AC-45	1024	1	S	MNG	45n	30n$	1.0	0.0	5.0	.80	2.1△				0	7	A256	DL16bm
91	MCM21L25AC-45	1024	1	S	MNG	45n	30n$	1.0	0.0	5.0	.80	2.1§				0	7	A256	DL16bm
92	MCM2115AC-45	1024	1	S	MNG	45n	30n$	1.0	0.0	5.0	.80	2.1△				0	7	A256	DL16bm
93	MCM2125AC-45	1024	1	S	MNG	45n	30n$	1.0	0.0	5.0	.80	2.1§				0	7	A163	DL16bm
94	P2115A	1024	1	S	MNG	45n	35n$	625m	0.0	5.0	.80	2.1	16m	.45		0	7	A256	ML127v
95	P2115AL	1024	1	S	MNG	45n	30n$	394m	0.0	5.0	.80	2.1	16m	.45		0	7	A256	ML127v
96	P2125A	1024	1	S	MNG	45n	35n$	625m	0.0	5.0	.80	2.1§	7.0m	.45		0	7	A256	ML127v
97	P2125AL	1024	1	S	MNG	45n	30n$	394m	0.0	5.0	.80	2.1§	7.0m	.45		0	7	A256	ML127v
98	S4015-3	1024	1	S	MNG	45n	45n	500m	0.0	5.0	.80	2.0	16m	.45		0	7	A97	DL16ar
99	S4015-4	1024	1	S	MNG	45n	45n	625m	0.0	5.0	.80	2.0	16m	.45		0	7	A97	DL16ar
100	S4025-3	1024	1	S	MNG	45n	45n	500m	0.0	5.0	.80	2.0	16m	.45		0	7	A97	DL16ar
101	S4025-4	1024	1	S	MNG	45n	45n	625m	0.0	5.0	.80	2.0	16m	.45		0	7	A97	DL16ar
102	MCM2115AC-55	1024	1	S	MNG	55n	40n$	1.0	0.0	5.0	.80	2.1△				0	7	A256	DL16bm
103	MCM2125AC-55	1024	1	S	MNG	55n	40n$	1.0	0.0	5.0	.80	2.1§				0	7	A163	DL16bm
104	MW7001ID	1024	1	S	MNG	60n	180n	510u%	3.0	10	.80	2.4	100u			0	7	A162	ML8s
105	S4015-2	1024	1	S	MNG	60n	60n	625m	0.0	5.0	.80	2.0	16m	.45		0	7	A97	DL16ar
106	S4025-2	1024	1	S	MNG	60n	60n	625m	0.0	5.0	.80	2.0	16m	.45		0	7	A97	DL16ar
107	C2115-2	1024	1	S	MNG	70n	50n$	625m♦	0.0	5.0	.80	2.1§	16m	.45		0	8	A256	DL16ek
108	C2115A-2	1024	1	S	MNG	70n	50n$	625m	0.0	5.0	.80	2.1	16m	.45		0	7	A256	DL16∅
109	C2115AL-2	1024	1	S	MNG	70n	45n$	394m	0.0	5.0	.80	2.1	16m	.45		0	7	A256	DL16∅
110	C2125-2	1024	1	S	MNG	70n	50n$	625m♦	0.0	5.0	.80	2.1§	7.0m	.45		0	8	A256	DL16ek

SYMBOLS AND CODES EXPLAINED IN INTERPRETER

2. READ-WRITE MEMORIES (RAMS)

IN ORDER OF (1)No.WORDS(2)No.BITS/WORD (3)MODE(4)STRUCT.(5)MAX ACC.TIME(6)TYPE No.

LINE No.	6 TYPE NUMBER	ORGANIZATION 1 NO. OF WORDS	2 BITS PER WORD	3 MODE	4 STRUCTURE CODE	5 MAX. ACCESS TIME (S)	MAX. WRITE CYCLE TIME (S)	MAX. POWER DISS. (W)	POWER SUPPLY SPAN NEG. (V)	POWER SUPPLY SPAN POS. (V)	INPUT LOGIC LEVELS MAX. '0' (V)	INPUT LOGIC LEVELS MIN. '1' (V)	MIN.OUTPUT SINK CURRENT (A)	MIN.OUTPUT SINK CURRENT @ OUT (V)	MIN. CLOCK FREQ. (Hz)	OPER TEMP RNGE CODE -	OPER TEMP RNGE CODE +	DRAWINGS FUNCTIONAL EQUIVALENT NUMBER	DRAWINGS OUTLINE
1	C2125A-2	1024	1	S	MNG	70n	50n$	625m	0.0	5.0	.80	2.1§	7.0m	.45		0	7	A256	DL16Ø
2	C2125AL-2	1024	1	S	MNG	70n	45n$	394m	0.0	5.0	.80	2.1§	7.0m	.45		0	7	A256	DL16Ø
3	D2115-2	1024	1	S	MNG	70n	50n$	625m♦	0.0	5.0	.80	2.1§	16m	.45		0	8	A256	DL16dd
4	MB8115H	1024	1	S	MNG	70n	50n$	500m♦	0.0	5.0	.80	2.1Δ	12m	.45		0	7	A256a	DL16g
5	MB8125H	1024	1	S	MNG	70n	50n$	500m♦	0.0	5.0	.80	2.1§	7.0m	.45		0	7	A256a	DL16g
6	MBM2115H	1024	1	S	MNG	70n	50n$	500m♦	0.0	5.0	.80	2.1Δ	12m	.45		0	7	A256a	DL16g
7	MBM2125H	1024	1	S	MNG	70n	50n$	500m♦	0.0	5.0	.80	2.1§	7.0m	.45		0	7	A256a	DL16g
8	MCM21L15AC-70	1024	1	S	MNG	70n	30n$	1.0	0.0	5.0	.80	2.1Δ				0	7	A256	DL16bm
9	MCM21L25AC-70	1024	1	S	MNG	70n	30n$	1.0	0.0	5.0	.80	2.1§				0	7	A256	DL16bm
10	MCM2115AC-70	1024	1	S	MNG	70n	50n$	1.0	0.0	5.0	.80	2.1Δ				0	7	A256	DL16bm
11	MCM2125AC-70	1024	1	S	MNG	70n	50n$	1.0	0.0	5.0	.80	2.1§				0	7	A163	DL16bm
12	P2115-2	1024	1	S	MNG	70n	50n$	625m♦	0.0	5.0	.80	2.1§	16m	.45		0	8	A256	DL16bw
13	P2115A-2	1024	1	S	MNG	70n	50n$	625m	0.0	5.0	.80	2.1	16m	.45		0	7	A256	ML127v
14	P2115AL-2	1024	1	S	MNG	70n	45n$	394m	0.0	5.0	.80	2.1	16m	.45		0	7	A256	ML127v
15	P2125-2	1024	1	S	MNG	70n	50n$	625m♦	0.0	5.0	.80	2.1§	7.0m	.45		0	8	A256	DL16bw
16	P2125A-2	1024	1	S	MNG	70n	50n$	625m	0.0	5.0	.80	2.1§	7.0m	.45		0	7	A256	ML127v
17	P2125AL-2	1024	1	S	MNG	70n	45n$	394m	0.0	5.0	.80	2.1§	7.0m	.45		0	7	A256	ML127v
18	S40152-2H	1024	1	S	MNG	70n	90n	625m†	0.0	5.0		Δ						A256	DL16bt
19	S40252-2H	1024	1	S	MNG	70n	90n	625m†	0.0	5.0		§						A256	DL16bt
20	2115F	1024	1	S	MNG	95n	50n$	500m	0.0	5.0	.80	2.1Δ	2.4m	.45		0	7	A256	DL16cv
21	2115I	1024	1	S	MNG	95n	50n$	500m	0.0	5.0	.80	2.1Δ	2.4m	.45		0	7	A256	DL16q
22	2115LF	1024	1	S	MNG	95n	50n$	325m	0.0	5.0	.80	2.1Δ	2.4m	.45		0	7	A256	DL16cv
23	2115LI	1024	1	S	MNG	95n	50n$	325m	0.0	5.0	.80	2.1Δ	2.4m	.45		0	7	A256	DL16q
24	2115LN	1024	1	S	MNG	95n	50n$	325m	0.0	5.0	.80	2.1Δ	2.4m	.45		0	7	A256	DL16fm
25	2115N	1024	1	S	MNG	95n	50n$	500m	0.0	5.0	.80	2.1Δ	2.4m	.45		0	7	A256	DL16fm
26	2125F	1024	1	S	MNG	95n	50n$	500m	0.0	5.0	.80	2.1§	16m	.45		0	7	A256	DL16cv
27	2125I	1024	1	S	MNG	95n	50n$	500m	0.0	5.0	.80	2.1§	16m	.45		0	7	A256	DL16q
28	2125LF	1024	1	S	MNG	95n	50n$	325m	0.0	5.0	.80	2.1§	16m	.45		0	7	A256	DL16cv
29	2125LI	1024	1	S	MNG	95n	50n$	325m	0.0	5.0	.80	2.1§	16m	.45		0	7	A256	DL16q
30	2125LN	1024	1	S	MNG	95n	50n$	325m	0.0	5.0	.80	2.1§	16m	.45		0	7	A256	DL16fm
31	2125N	1024	1	S	MNG	95n	50n$	500m	0.0	5.0	.80	2.1§	16m	.45		0	7	A256	DL16fm
32	C2115	1024	1	S	MNG	95n	50n$	500m♦	0.0	5.0	.80	2.1§	12m	.45		0	8	A256	DL16ek
33	C2115L	1024	1	S	MNG	95n	50n$	375m♦	0.0	5.0	.80	2.1§	12m	.45		0	8	A256	DL16ek
34	C2125	1024	1	S	MNG	95n	50n$	500m♦	0.0	5.0	.80	2.1§	7.0m	.45		0	8	A256	DL16ek
35	C2125L	1024	1	S	MNG	95n	50n$	375m♦	0.0	5.0	.80	2.1§	7.0m	.45		0	8	A256	DL16ek
36	D2115	1024	1	S	MNG	95n	50n$	500m♦	0.0	5.0	.80	2.1§	12m	.45		0	8	A256	DL16dd
37	D2115L	1024	1	S	MNG	95n	50n$	200u	0.0	5.0	.80	2.1§	12m	.45		0	8	A256	DL16dd
38	MB8115E	1024	1	S	MNG	95n	60n$	325m♦	0.0	5.0	.80	2.1Δ	12m	.45		0	7	A256a	DL16g
39	MB8125E	1024	1	S	MNG	95n	60n$	325m♦	0.0	5.0	.80	2.1§	7.0m	.45		0	7	A256a	DL16g
40	MBM2115E	1024	1	S	MNG	95n	60n$	325m♦	0.0	5.0	.80	2.1Δ	12m	.45		0	7	A256a	DL16g
41	MBM2125E	1024	1	S	MNG	95n	60n$	325m♦	0.0	5.0	.80	2.1§	7.0m	.45		0	7	A256a	DL16g
42	P2115	1024	1	S	MNG	95n	50n$	500m♦	0.0	5.0	.80	2.1§	12m	.45		0	8	A256	DL16bw
43	P2115L	1024	1	S	MNG	95n	50n$	200u	0.0	5.0	.80	2.1§	12m	.45		0	8	A256	DL16bw
44	P2125	1024	1	S	MNG	95n	50n$	500m♦	0.0	5.0	.80	2.1§	7.0m	.45		0	8	A256	DL16bw
45	P2125L	1024	1	S	MNG	95n	50n$	200u	0.0	5.0	.80	2.1§	7.0m	.45		0	8	A256	DL16bw
46	S4015-2E	1024	1	S	MNG	95n	120n	500m†	0.0	5.0		Δ						A256	DL16bt
47	S4025-2E	1024	1	S	MNG	95n	120n	500m†	0.0	5.0		§						A256	DL16bt
48	S6508A1	1024	1	S	MNG	115n	80n$	10m	0.0	12	70	20§	1.0uΔ			0	7	A461	DLØ
49	MB8115N	1024	1	S	MNG	120n	60n$	325m♦	0.0	5.0	.80	2.1Δ	12m	.45		0	7	A256a	DL16g
50	MB8125N	1024	1	S	MNG	120n	60n$	325m♦	0.0	5.0	.80	2.1§	7.0m	.45		0	7	A256a	DL16g
51	MBM2115N	1024	1	S	MNG	120n	60n$	325m♦	0.0	5.0	.80	2.1Δ	12m	.45		0	7	A256a	DL16g
52	MBM2125N	1024	1	S	MNG	120n	60n$	325m♦	0.0	5.0	.80	2.1§	7.0m	.45		0	7	A256a	DL16g
53	AM9102DDC	1024	1	S	MNG	250n	250n	250m	0.0	5.0	.80	2.0	3.2m	.40		0	7	A118	DL16ct
54	AM9102DPC	1024	1	S	MNG	250n	250n	250m	0.0	5.0	.80	2.0	3.2m	.40		0	7	A118	DL16bw
55	C2102A2	1024	1	S	MNG	250n	250n	342m	0.0	5.0	.80	2.0§	2.1m	.40		0	7	A118	DL16ah
56	D2102A2	1024	1	S	MNG	250n	250n	325m	0.0	5.0	.80	2.0	2.1m	.40		0	7	A118	DL16dq
57	M2102AD1-2	1024	1	S	MNG	250n	250n	342m	0.0	5.0	.80	2.0	2.1m	.40		0	7	A380	DL16ad
58	P2102A2	1024	1	S	MNG	250n	250n	342m	0.0	5.0	.80	2.0	2.1m	.40		0	7	A118	DL16dr
59	P2102AL2	1024	1	S	MNG	250n	250n	342m	0.0	5.0	.80	2.0	2.1m	.40		0	7	A118	DL16dr
60	uPD2102ALC2	1024	1	S	MNG	250n	250n	150m†	0.0	5.0	-.50*	20§	2.1m	.40		0	7	A118	DL16di
61	AM91L02CDC	1024	1	S	MNG	300n	300n	165m	0.0	5.0	.80	2.0	3.2m	.40		0	7	A118	DL16ct
62	AM91L02CDM	1024	1	S	MNG	300n	300n	165m	0.0	5.0	.80	2.0	3.2m	.40		5	C	A118	DL16ay
63	AM91L02CPC	1024	1	S	MNG	300n	300n	165m	0.0	5.0	.80	2.0	3.2m	.40		0	7	A118	DL16bw
64	AM9102CDC	1024	1	S	MNG	300n	300n	250m	0.0	5.0	.80	2.0	3.2m	.40		0	7	A118	DL16ct
65	AM9102CDM	1024	1	S	MNG	300n	300n	275m	0.0	5.0	.80	2.0	3.2m	.40		5	C	A118	DL16ay
66	AM9102CPC	1024	1	S	MNG	300n	300n	250m	0.0	5.0	.80	2.0	3.2m	.40		0	7	A118	DL16bw
67	21F02B	1024	1	S	MNG	350n	350n		12	5.0	.65	2.2	1.9mØ	.40		0	7	A118a	DL16az
68	2102AF	1024	1	S	MNG	350n	350n	1.0 Ø	0.0	5.0	.80	2.0§	2.1m	.40		1	8	A118	DL16cv
69	2102AI	1024	1	S	MNG	350n	350n	1.0 Ø	0.0	5.0	.80	2.0§	2.1m	.40		1	8	A118	DL16q
70	2102AN	1024	1	S	MNG	350n	350n	1.0 Ø	0.0	5.0	.80	2.0§	2.1m	.40		1	8	A118	DL16fm
71	C2102A	1024	1	S	MNG	350n	350n	289m	0.0	5.0	.80	2.0§	2.1m	.40		0	7	A118	DL16ah
72	D2102A	1024	1	S	MNG	350n	350n	275m	0.0	5.0	.80	2.0§	2.1m	.40		0	7	A118	DL16dq
73	HM452102-3	1024	1	S	MNG	350n	350n	1.0 Ø	0.0	5.0	.80	2.0§	2.1m	.40		0	7	A118	ML22c
74	P2102A	1024	1	S	MNG	350n	350n	289m	0.0	5.0	.80	2.0§	2.1m	.40		0	7	A118	DL16dr
75	P2102AL	1024	1	S	MNG	350n	350n	174m	0.0	5.0	.80	2.0§	2.1m	.40		0	7	A118	DL16dr
76	SYC21L02A	1024	1	S	MNG	350n	350n	1.0 Ø	0.0	5.0	.65	2.2	1.9m	.45		0	7	A380	DL16q
77	SYP21L02A	1024	1	S	MNG	350n	350n	1.0 Ø	0.0	5.0	.65	2.2	1.9m	.45		0	7	A380	DL16fc
78	21L02-3B	1024	1	S	MNG	400n	400n		12	5.0	.65	2.2	1.9mØ	.40		0	7	A118a	DL16az
79	AM91L02BDC	1024	1	S	MNG	400n	400n	150m	0.0	5.0	.80	2.0	3.2m	.40		0	7	A118	DL16ct
80	AM91L02BDM	1024	1	S	MNG	400n	400n	175m	0.0	5.0	.80	2.0	3.2m	.40		5	C	A118	DL16ay
81	AM91L02BFM	1024	1	S	MNG	400n	400n	175m	0.0	5.0	.80	2.0	3.2m	.40		5	C	A118	FL33b
82	AM91L02BPC	1024	1	S	MNG	400n	400n	150m	0.0	5.0	.80	2.0	3.2m	.40		0	7	A118	DL16bw
83	AM9102BDM	1024	1	S	MNG	400n	400n	275m	0.0	5.0	.80	2.0	3.2m	.40		5	C	A118	DL16ay
84	AM9102BFM	1024	1	S	MNG	400n	400n	275m	0.0	5.0	.80	2.0	3.2m	.40		5	C	A118	FL33b
85	AM9102BPC	1024	1	S	MNG	400n	400n	260mØ	0.0	5.0	.80	2.0	3.2m	.40		0	7	A118	DL16bw
86	SYC21L02B	1024	1	S	MNG	400n	400n	1.0 Ø	0.0	5.0	.65	2.2	1.9m	.45		0	7	A380	DL16q
87	SYP21L02B	1024	1	S	MNG	400n	400n	1.0 Ø	0.0	5.0	.65	2.2	1.9m	.45		0	7	A380	DL16fc
88	C2102A4	1024	1	S	MNG	450n	450n	289m	0.0	5.0	.80	2.0§	2.1m	.40		0	7	A118	DL16ah
89	CM2102A4	1024	1	S	MNG	450n	450n	1.0 Ø	0.0	5.0	.80	2.0	2.1m	.45		5	C	A118	DL16ek
90	D2102A4	1024	1	S	MNG	450n	450n	275m	0.0	5.0	.80	2.0	2.1m	.40		0	7	A118	DL16dq
91	HM452102-4	1024	1	S	MNG	450n	450n	1.0 Ø	0.0	5.0	.80	2.0§	2.1m	.40		0	7	A118	ML22c
92	KMS4102	1024	1	S	MNG	450n	450nΔ	370m	0.0	5.0		§							
93	M2102AD1-4	1024	1	S	MNG	450n	450n	289m	0.0	5.0	.80	2.0	2.1m	.40		0	7	A380	DL16ad
94	MB8102	1024	1	S	MNG	450n	200n$	370m	0.0	5.0	.65	2.2§	3.2m	.40		0	7	A118b	DL16u
95	MK4102P-1	1024	1	S	MNG	450n	450n	350m	0.0	5.0	.65	2.2§	3.2m	.40		0	7	A380	DL16i
96	P2102A4	1024	1	S	MNG	450n	450n	289m	0.0	5.0	.80	2.0	2.1m	.40		0	7	A118	DL16dr
97	P2102AL4	1024	1	S	MNG	450n	450n	174m	0.0	5.0	.80	2.0	2.1m	.40		0	7	A118	DL16dr
98	S3102A	1024	1	S	MNG	450n	450n	1.0 Ø	0.0	5.0	.65	2.2	1.9m	.45		0	7	A88	ML153
99	TMS4033/2102-1JL	1024	1	S	MNG	450n	450n	350m	0.0	5.0	.65	2.2§	1.9m	.45		0	7	A203	DL16x
100	TMS4033/2102-1NL	1024	1	S	MNG	450n	450n	350m	0.0	5.0	.65	2.2§	1.9m	.45		0	7	A203	DL16fb
101	uPD2102ALC4	1024	1	S	MNG	450n	450n	150m†	0.0	5.0	-.50*	20§	2.1m	.40		0	7	A118	DL16di
102	21L02-1B	1024	1	S	MNG	500n	500n		12	5.0	.65	2.2	1.9mØ	.40		0	7	A118a	DL16az
103	2102-1F	1024	1	S	MNG	500n	500n	350m	0.0	5.0	.65	2.2§	1.9m	.45		0	7	A118b	DL16cv
104	2102-1I	1024	1	S	MNG	500n	500n	350m	0.0	5.0	.65	2.2§	1.9m	.45		0	7	A118b	DL16q
105	2102-1N	1024	1	S	MNG	500n	500n	350m	0.0	5.0	.65	2.2§	1.9m	.45		0	7	A118b	DL16fm
106	2602-1B	1024	1	S	MNG	500n	500n	640mØ	0.0	5.0	.65	2.2	1.6m	.40		0	7	A380	DL16fm
107	2602-1I	1024	1	S	MNG	500n	500n	800mØ	0.0	5.0	.65	2.2	1.6m	.40		0	7	A380	DL16p
108	AM91L02ADC	1024	1	S	MNG	500n	500n	150m	0.0	5.0	.80	2.0	3.2m	.40		0	7	A118	DL16ct

SYMBOLS AND CODES EXPLAINED IN INTERPRETER

2. READ-WRITE MEMORIES (RAMS)

IN ORDER OF (1)No.WORDS(2)No.BITS/WORD (3)MODE(4)STRUCT.(5)MAX ACC.TIME(6)TYPE No.

LINE No.	6 TYPE NUMBER	ORGANIZATION 1 NO. OF WORDS	2 BITS PER WORD	3 MODE	4 STRUCTURE CODE	5 MAX. ACCESS TIME (S)	MAX. WRITE CYCLE TIME (S)	MAX. POWER DISS. (W)	POWER SUPPLY SPAN NEG. (V)	POS. (V)	INPUT LOGIC LEVELS MAX. '0' (V)	MIN. '1' (V)	MIN.OUTPUT SINK CURRENT (A)	@ OUT (V)	MIN. CLOCK FREQ. (Hz)	OPER TEMP RNGE CODE -	+	DRAWINGS FUNCTIONAL EQUIVALENT NUMBER	OUTLINE
1	AM91L02ADM	1024	1	S	MNG	500n	500n	175m	0.0	5.0	.80	2.0	3.2m	.40		5	C	A118	DL16ay
2	AM91L02AFM	1024	1	S	MNG	500n	500n	175m	0.0	5.0	.80	2.0	3.2m	.40		5	C	A118	FL33b
3	AM91L02APC	1024	1	S	MNG	500n	500n	150m	0.0	5.0	.80	2.0	3.2m	.40		0	7	A118	DL16bw
4	AM9102ADC	1024	1	S	MNG	500n	500n	260m∅	0.0	5.0	.80	2.0	3.2m	.40		0	7	A118	DL16ct
5	AM9102ADM	1024	1	S	MNG	500n	500n	275m	0.0	5.0	.80	2.0	3.2m	.40		5	C	A118	DL16ay
6	AM9102AFM	1024	1	S	MNG	500n	500n	275m	0.0	5.0	.80	2.0	3.2m	.40		5	C	A118	FL33b
7	AM9102APC	1024	1	S	MNG	500n	250n	260m∅	0.0	5.0	.80	2.0	3.2m	.40		0	7	A118	DL16bw
8	C2102-1	1024	1	S	MNG	500n	500n	350m♦	0.0	5.0	.65	2.2	1.9m	.45		0	7	A118b	DL16ct
9	HM45102	1024	1	S	MNG	500n		1.0 ∅	0.0	5.0	.50	5.0§	1.9m	.45		0	7	A118	DL16z
10	IM7552-1CDE	1024	1	S	MNG	500n	500n	300m	0.0	5.0	.80	2.0§	3.2m	.45		0	7	A380	DL16b
11	IM7552-1CPE	1024	1	S	MNG	500n	500n	300m	0.0	5.0	.80	2.0§	3.2m	.45		0	7	A380	DL16ao
12	IM7552-1MDE	1024	1	S	MNG	500n	500n	400m	0.0	5.0	.80	2.0§	1.9m	.40		5	C	A380	DL16b
13	IM7552-1MPE	1024	1	S	MNG	500n	500n	300m	0.0	5.0	.80	2.2	3.2	.45		5	C	A380	DL16ao
14	M330CB1	1024	1	S	MNG	500n	500n	150m†	0.0	5.0	.65	2.2	1.9m	.45		0	7	A118b	DL16eo
15	M330CD1	1024	1	S	MNG	500n	500n	150m†	0.0	5.0	.65	2.2	1.9m	.45		0	7	A118b	DL16v
16	MCM2102L1	1024	1	S	MNG	500n	500n	350m♦	0.0	5.0	.45%	2.4	1.9m	.45		0	7	A118	DL16db
17	MCM2102P1	1024	1	S	MNG	500n	500n	350m♦	0.0	5.0	.45%	2.4	1.9m	.45		0	7	A118	DL16ew
18	MF2102	1024	1	S	MNG	500n	500n	150m†	0.0	5.0	.65	2.2	1.9m	.45		0	7	A118	ML2a
19	MF2102-1	1024	1	S	MNG	500n	500n	150m†	0.0	5.0	.65	2.2	1.9m	.45		0	7	A118	ML1b
20	P2102-1	1024	1	S	MNG	500n	500n	350m♦	0.0	5.0	.65	2.2	1.9m	.45		0	7	A118b	DL16bw
21	SAB2102-1	1024	1	S	MNG	500n	300n$	350m♦	0.0	5.0	.65	2.2§	1.9m	.45		0	7	A192	DL16t
22	SYC21L02-1	1024	1	S	MNG	500n	500n	1.0 ∅	0.0	5.0	.65	2.2	1.9m	.45		0	7	A380	DL16q
23	SYP21L02-1	1024	1	S	MNG	500n	500n	1.0 ∅	0.0	5.0	.65	2.2	1.9m	.45		0	7	A380	DL16fc
24	2102-2F	1024	1	S	MNG	650n	650n	350m	0.0	5.0	.65	2.2§	1.9m	.45		0	7	A118b	DL16cv
25	2102-2I	1024	1	S	MNG	650n	650n	350m	0.0	5.0	.65	2.2§	1.9m	.45		0	7	A118b	DL16q
26	2102-2N	1024	1	S	MNG	650n	650n	350m	0.0	5.0	.65	2.2§	1.9m	.45		0	7	A118b	DL16fm
27	AM91L02DC	1024	1	S	MNG	650n	650n	175m	0.0	5.0	.80	2.0	3.2m	.40		0	7	A118	DL16ct
28	AM91L02DM	1024	1	S	MNG	650n	650n	175m	0.0	5.0	.80	2.0	3.2m	.40		5	C	A118	DL16ay
29	AM91L02FM	1024	1	S	MNG	650n	650n	175m	0.0	5.0	.80	2.0	3.2m	.40		5	C	A118	FL33b
30	AM91L02PC	1024	1	S	MNG	650n	650n	175m	0.0	5.0	.80	2.0	3.2m	.40		0	7	A118	DL16bw
31	AM9102DC	1024	1	S	MNG	650n	650n	260m∅	0.0	5.0	.80	2.0	3.2m	.40		0	7	A118	DL16ct
32	AM9102DM	1024	1	S	MNG	650n	650n	260m∅	0.0	5.0	.80	2.0	3.2m	.40		5	C	A118	DL16ay
33	AM9102FM	1024	1	S	MNG	650n	650n	275m	0.0	5.0	.80	2.0	3.2m	.40		5	C	A118	FL33b
34	AM9102PC	1024	1	S	MNG	650n	650n	260m∅	0.0	5.0	.80	2.0	3.2m	.40		0	7	A118	DL16bw
35	C2102-2	1024	1	S	MNG	650n	650n	350m♦	0.0	5.0	.65	2.2	1.9m	.45		0	7	A118b	DL16ct
36	C2102A6	1024	1	S	MNG	650n	650n	289m	0.0	5.0	.65	2.2§	2.1m	.45		0	7	A118	DL16ah
37	CM2102A6	1024	1	S	MNG	650n	650n	1.0 ∅	0.0	5.0	.65	2.2	1.9m	.45		5	C	A118	DL16ek
38	D2102A6	1024	1	S	MNG	650n	650n	289m	0.0	5.0	.65	2.2§	2.1m	.45		0	8	A118	DL16cm
39	IM7552-2CDE	1024	1	S	MNG	650n	500n	350m	0.0	5.0	.80	2.0§	3.2m	.45		0	7	A380	DL16b
40	IM7552-2CPE	1024	1	S	MNG	650n	500n	350m	0.0	5.0	.80	2.0§	3.2m	.45		0	7	A380	DL16ao
41	IM7552-2MDE	1024	1	S	MNG	650n	500n	400m	0.0	5.0	.80	2.0§	1.9m	.40		5	C	A380	DL16b
42	M330BB1	1024	1	S	MNG	650n	650n	150m†	0.0	5.0	.65	2.2	1.9m	.45		0	7	A118b	DL16eo
43	M330BD1	1024	1	S	MNG	650n	650n	150m†	0.0	5.0	.65	2.2	1.9m	.45		0	7	A118b	DL16v
44	M2102AD1-6	1024	1	S	MNG	650n	650n	289m	0.0	5.0	.65	2.2	2.1m	.45		0	7	A380	DL16ad
45	MCM2102L2	1024	1	S	MNG	650n	650n	350m♦	0.0	5.0	.45%	2.4	1.9m	.45		0	7	A118	DL16db
46	MCM2102P2	1024	1	S	MNG	650n	650n	350m♦	0.0	5.0	.45%	2.4	1.9m	.45		0	7	A118	DL16ew
47	MN2102	1024	1	S	MNG	650n	650n	289m	0.0	5.0	.65	2.2				1	8	A380	DL16fk
48	P2102-2	1024	1	S	MNG	650n	650n	350m♦	0.0	5.0	.65	2.2	1.9m	.45		0	7	A118b	DL16bw
49	P2102A6	1024	1	S	MNG	650n	650n	289m	0.0	5.0	.65	2.2§	2.1m	.45		0	8	A118	DL16dr
50	S3102B	1024	1	S	MNG	650n	650n	1.0 ∅	0.0	5.0	.65	2.2	1.9m	.45		0	7	A88	ML153
51	TMS4034/2102-2JL	1024	1	S	MNG	650n	650n	350m	0.0	5.0	.65	2.2§	1.9m	.45		0	7	A203	DL16x
52	TMS4034/2102-2NL	1024	1	S	MNG	650n	650n	350m	0.0	5.0	.65	2.2§	1.9m	.45		0	7	A203	DL16fb
53	2102B	1024	1	S	MNG	1.0u	1.0u		12	5.0	.65	2.2	1.9mØ	.40		0	7	A118a	DL16az
54	2102F	1024	1	S	MNG	1.0u	1.0u	350m	0.0	5.0	.65	2.2§	1.9m	.45		0	7	A118a	DL16cv
55	2102I	1024	1	S	MNG	1.0u	1.0u	350m	0.0	5.0	.65	2.2§	1.9m	.45		0	7	A118a	DL16q
56	2102N	1024	1	S	MNG	1.0u	1.0u	350m	0.0	5.0	.65	2.2§	1.9m	.45		0	7	A118a	DL16fm
57	2602B	1024	1	S	MNG	1.0u	1.0u	640m	0.0	5.0	.65	2.2§	1.9m	.45		0	7	F306	DL16fm
58	2602I	1024	1	S	MNG	1.0u	1.0u	800m	0.0	5.0	.65	2.2§	1.9m	.45		0	7	F306	ML171
59	C2102	1024	1	S	MNG	1.0u	1.0u	350m♦	0.0	5.0	.65	2.2	1.9m	.45		0	7	A118b	DL16ct
60	IM7552CDE	1024	1	S	MNG	1.0u	500n	300m	0.0	5.0	.80	2.0§	3.2m	.45		0	7	A380	DL16b
61	IM7552CPE	1024	1	S	MNG	1.0u	500n	300m	0.0	5.0	.80	2.0§	3.2	.45		0	7	A380	DL16ao
62	IM7552MDE	1024	1	S	MNG	1.0u	500n	400m	0.0	5.0	.80	2.0§	1.9m	.40		5	C	A380	DL16b
63	IM7552MPE	1024	1	S	MNG	1.0u	500n	400m	0.0	5.0	.80	2.0§	1.9m	.40		5	C	A380	DL16ao
64	M330AB1	1024	1	S	MNG	1.0u	1.0u	150m†	0.0	5.0	.65	2.2	1.9m	.45		0	7	A118b	DL16eo
65	M330AD1	1024	1	S	MNG	1.0u	1.0u	150m†	0.0	5.0	.65	2.2	1.9m	.45		0	7	A118b	DL16v
66	M58751P2	1024	1	S	MNG	1.0u	1.0u	200m	0.0	5.0	.65	2.2	2.1m	.40		0	7	A380	ML136
67	MCM2102L	1024	1	S	MNG	1.0u	1.0u	350m♦	0.0	5.0	.45%	2.4	1.9m	.45		0	7	A118	DL16db
68	MCM2102P	1024	1	S	MNG	1.0u	1.0u	350m♦	0.0	5.0	.45%	2.4	1.9m	.45		0	7	A118	DL16ew
69	MF2102#1	1024	1	S	MNG	1.0u	1.0u	150m†	0.0	5.0	.65	2.2	1.9m	.45		0	7	A118	ML2a
70	MF2102#2	1024	1	S	MNG	1.0u	1.0u	150m†	0.0	5.0	.65	2.2	1.9m	.45		0	7	A118	ML1b
71	MK4102P	1024	1	S	MNG	1.0u	1.0u	350m	0.0	5.0	.65	2.2§	3.2m	.40		0	7	A380	DL16i
72	P2102	1024	1	S	MNG	1.0u	1.0u	350m♦	0.0	5.0	.65	2.2	1.9m	.45		0	7	A118	DL16at
73	S3102	1024	1	S	MNG	1.0u	1.0u	1.0 ∅	0.0	5.0	.65	2.2	1.9m	.45		0	7	A88	ML153
74	SAB2102	1024	1	S	MNG	1.0u	750n$	350m♦	0.0	5.0	.65	2.2§	1.9m	.45		0	7	A192	ML2n
75	SYC21L02	1024	1	S	MNG	1.0u	1.0u	1.0 ∅	0.0	5.0	.65	2.2	1.9m	.45		0	7	A380	DL16q
76	SYP21L02	1024	1	S	MNG	1.0u	1.0u	1.0 ∅	0.0	5.0	.65	2.2	1.9m	.45		0	7	A380	DL16fc
77	TMS4035/2102JL	1024	1	S	MNG	1.0u	1.0u	350m	0.0	5.0	.65	2.2§	1.9m	.45		0	7	A203	DL16x
78	TMS4035/2102NL	1024	1	S	MNG	1.0u	1.0u	350m	0.0	5.0	.65	2.2§	1.9m	.45		0	7	A203	DL16fb
79	C2102-8	1024	1	S	MNG	1.5u	2.0u	1.0 ∅	0.0	5.0	.65	3.0	1.5m	.50		1	5	A118	DL16ek
80	P2102-8	1024	1	S	MNG	1.5u	2.0u	1.0 ∅	0.0	5.0	.65	3.0	1.5m	.50		1	5	A118	DL16at
81	SY21H02-1	1024	1	S	MNI	150n	150n	1.0 ∅	0.0	5.0	.80	2.0	2.1m	.40		0	5	PN16e	DL∅
82	91700112-6D	1024	1	S	MNX	60n	180n	510m†	0.0	15	.80	2.4	2.0u△			0	7	A162	DL∅
83	91700112-6DP	1024	1	S	MNX	60n	180n	510m†	0.0	15	.80	2.4	2.0u△			0	7	A162	DL∅
84	IM700112-6D	1024	1	S	MNX	60n	180n	15u%	0.0	15	.80	2.4	2.0u△			0	7	A162	DL∅
85	IM700112-6DP	1024	1	S	MNX	60n	180n	15u%	0.0	15	.80	2.4	2.0u△			0	7	A162	DL∅
86	1802	1024	1	S	MNX	70n	165n	1.6 ∅Ø	3.5	15	1.0	4.0				0	7		ML134b
87	91700115-6D	1024	1	S	MNX	70n	200n	550m†	0.0	15	.80	2.4	2.0u△			5	8	A162	DL∅
88	IM700115-6D	1024	1	S	MNX	70n	200n	18u%	0.0	15	.80	2.4	2.0u△			5	8	A162	DL∅
89	91700116-6D	1024	1	S	MNX	80n	250n	550m†	0.0	15	.80	2.4	2.0u△			5	C	A162	DL∅
90	IM7001-12CDF	1024	1	S	MNX	80n	250n	240u%	0.0	12	.80	2.4				0	7	A322	ML241
91	IM7001-12CPF	1024	1	S	MNX	80n	250n	240u%	0.0	12	.80	2.4				0	7	A322	ML212c
92	IM700116-6D	1024	1	S	MNX	80n	250n	36u%	0.0	15	.80	2.4	2.0u△			5	C	A162	DL∅
93	uPD405D	1024	1	S	MNX	85n	190n	100u%	5.0	12	.60	2.7	3.2m	.40		0	7	A220	
94	1801	1024	1	S	MNX	90n	175n	1.6 ∅Ø	3.5	15	1.0	4.0§	1.6m	.50		0	7		ML134b
95	IM7001-15CDF	1024	1	S	MNX	90n	250n	260u%	0.0	12	.80	2.4				5	8	A322	ML241
96	uPD2115-2	1024	1	S	MNX	90n	50n$	500m	0.0	5.0	.80	2.1△	12m	.45		0	7	A311	DL∅
97	uPD2125-2	1024	1	S	MNX	90n	50n$	500m	0.0	5.0	.80	2.1§	12m	.45		0	7	A311	DL∅
98	IM7001-16CDF	1024	1	S	MNX	100n	300n	260u%	0.0	12	.80	2.4				5	C	A322	ML241
99	uPD2115-1	1024	1	S	MNX	120n	60n$	500m	0.0	5.0	.80	2.1△	12m	.45		0	7	A311	DL∅
100	uPD2125-1	1024	1	S	MNX	120n	60n$	500m	0.0	5.0	.80	2.1§	12m	.45		0	7	A311	DL∅
101	SYC21H02	1024	1	S	MNX	175n	175n	1.0 ∅	0.0	5.0	.80	2.0	2.1m	.40		0	5	A118	DL16q
102	SYP21H02	1024	1	S	MNX	175n	175n	1.0 ∅	0.0	5.0	.80	2.0	2.1m	.40		0	5	A118	DL16fc
103	SYC21H02-2	1024	1	S	MNX	200n	200n	1.0 ∅	0.0	5.0	.80	2.0	2.1m	.40		0	5	A118	DL16q
104	SYP21H02-2	1024	1	S	MNX	200n	200n	1.0 ∅	0.0	5.0	.80	2.0	2.1m	.40		0	5	A118	DL16fc
105	uPD2102ALC-2	1024	1	S	MNX	250n	250n	367m	0.0	5.0	.80	2.0§	2.1m	.40		1	7	A380	DL16fd
106	IXD2201A	1024	1	S	MNX	300n	300n		0.0	5.0	0.8	2.0				3	8	A608	DL18cg

SYMBOLS AND CODES EXPLAINED IN INTERPRETER

2. READ-WRITE MEMORIES (RAMS)

IN ORDER OF (1)No.WORDS(2)No.BITS/WORD (3)MODE(4)STRUCT.(5)MAX ACC.TIME(6)TYPE No.

LINE No.	6 TYPE NUMBER	ORGANIZATION 1 NO. OF WORDS	2 BITS PER WORD	3 MODE	4 STRUC-TURE CODE	5 MAX. ACCESS TIME (S)	MAX. WRITE CYCLE TIME (S)	MAX. POWER DISS. (W)	POWER SUPPLY SPAN NEG. (V)	POWER SUPPLY SPAN POS. (V)	INPUT LOGIC LEVELS MAX. '0' (V)	INPUT LOGIC LEVELS MIN. '1' (V)	MIN.OUTPUT SINK CURRENT (A)	MIN.OUTPUT SINK CURRENT @ OUT (V)	MIN. CLOCK FREQ. (Hz)	OPER TEMP RNGE CODE -	OPER TEMP RNGE CODE +	DRAWINGS FUNCTIONAL EQUIVALENT NUMBER	DRAWINGS OUTLINE
1	MXD2201A	1024	1	S	MNX	300n	300n		0.0	5.0	0.8	2.0				5	C	A608	DL18cq
2	X2201-30#ai	1024	1	S	MNX	300n	300n		0.0	5.0	.80	2.0§	4.2m	.40		0	7	PN18cp	DL18Ø
3	XC2201#ai	1024	1	S	MNX	300n	300n		0.0	5.0	.80	2.0§	4.2m	.40		0	7	A608	DL18Ø
4	uPD2102ALC	1024	1	S	MNX	350n	350n	367m	0.0	5.0	.80	2.0§	2.1m	.40		1	7	A380	DL16fd
5	uPD2102ALC-4	1024	1	S	MNX	450n	450n	367m	0.0	5.0	.80	2.0§	2.1m	.40		1	7	A380	DL16fd
6	HM3503-1	1024	1	S	MON	150n	340n	1.0 Ø	0.0	19	.05	17	10uΔ	0.0		0	7	A2	ML121
7	S4006	1024	1	S	MPI	400n	650n	450m	12	5.0	.80	4.0	1.0m	0.0		0	7	A35	ML110
8	S4006R	1024	1	S	MPI	400n	650n	450m	12	5.0	.80	4.0	1.6m	.40		0	7	A35a	ML110
9	MCM1175L	1024	1	S	MPX	150n	250n		30	0.0	2.0	18				0	7	A69	DL22p
10	MCM1172L	1024	1	S	MPX	350n	860n	75u%†	0.0	23	2.0	18				0	7	A9a	ML97
11	MCM1173L	1024	1	S	MPX	350n	860n	75u%†	0.0	23	2.0	18				0	7	A9	DL24w
12	SYC2102A-2	1024	1	S	MXG	250n	250n	1.0 Ø	0.0	5.0	.80	2.0§	2.1m	.40		0	7	A118	DL16q
13	SYP2102A-2	1024	1	S	MXG	250n	250n	1.0 Ø	0.0	5.0	.80	2.0§	2.1m	.40		0	7	A118	DL16fc
14	SYC2102A-4	1024	1	S	MXG	450n	450n	1.0 Ø	0.0	5.0	.80	2.0§	2.1m	.40		0	7	A118	DL16q
15	SYP2102A-4	1024	1	S	MXG	450n	450n	1.0 Ø	0.0	5.0	.80	2.0§	2.1m	.40		0	7	A118	DL16fc
16	SYC2102-1	1024	1	S	MXG	500n	500n	1.0 Ø	0.0	5.0	.65	2.2	2.1m	.40		0	7	A118	DL16q
17	SYC2102-1L	1024	1	S	MXG	500n	500n	1.0 Ø	0.0	5.0	.65	2.2	2.1m	.40		0	7	A118	DL16q
18	SYP2102-1	1024	1	S	MXG	500n	500n	1.0 Ø	0.0	5.0	.65	2.2	2.1m	.40		0	7	A118	DL16fc
19	SYP2102-1L	1024	1	S	MXG	500n	500n	174m	0.0	5.0	.65	2.2	2.1m	.40		0	7	A118	DL16fc
20	SYC2102-6	1024	1	S	MXG	650n	650n	1.0 Ø	0.0	5.0	.65	2.2	2.1m	.40		0	7	A118	DL16q
21	SYP2102-6	1024	1	S	MXG	650n	650n	1.0 Ø	0.0	5.0	.65	2.2	2.1m	.40		0	7	A118	DL16fc
22	TMS4025NC	1024	2	D	MPT	280n	640n	100m	16	2.0	-15	-1.5	1.0uΔ	-16	500 Δ	2	7	A72	DL24bu
23	TMS4020NC	1024	2	D	MPT	320n	640n	300mØ	16	2.0	-15	-1.5	1.0uΔ	-16	500 Δ	2	7	A72	DL24bu
24	RAM125-28A#3	1024	2	S	BTX	125n	130n	3.8 †	5.0	5.0	.80	2.0	30mØ			1	8	A58a	PL3
25	RAM28A#3	1024	2	S	BTX	180n	200n	2.8 †	5.0	5.0	.80	2.0	20m	.40		1	8	A58	PL3
26	RAM228A#3	1024	2	S	BTX	180n	155n	2.8 †	5.0	5.0	.80	2.0	30mØ			1	8	A58a	PL3
27	RAM328A#3	1024	2	S	BTX	300n	300n	2.8 †	5.0	5.0	.80	2.0	30mØ			1	5	A58a	PL3
28	CM2404	1024	2	S	HXX	400n	600n	400u%†	0.0	5.0	.80	2.0	16m	.40		0	7	A25	ML11
29	SMA2002	1024	2	S	MXX	125n	150n	1.3 †Ø	5.0	5.0	.80	2.0	16m	.40		0	7	A65a	ML75a
30	S4016/2114	1024	4			200n	200n	500m	0.0	5.0	.80	2.0	8.0m	.40		0	7		
31	HM100474F1	1024	4		BEX	15n	15n$	200m%	5.0	0.0	-1.8	-.88				0	8		DL24Ø
32	SYD2114-1	1024	4		MNG	150n	150n	1.0 Ø	0.0	5.0	0.8	2.0	3.2m	0.4		0	7	A268	DL18bn
33	SYD2114-2	1024	4		MNG	200n	200n	1.0 Ø	0.0	5.0	0.8	2.0	3.2m	0.4		0	7	A268	DL18bn
34	SYD2114-3	1024	4		MNG	300n	300n	1.0 Ø	0.0	5.0	0.8	2.0	3.2m	0.4		0	7	A268	DL18bn
35	P2142L	1024	4	S		450n	450n	370m	0.0	5.0	.80	2.0§	2.1	.40		0	7	A366	DL20g
36	MBM10474A15C#ai	1024	4	S	BEX	15n		1.0	5.0	0.0	-1.8	-.81				0	7	PN24ig	DL24eb
37	MBM100474-15C#ai	1024	4	S	BEX	15n		900m	4.5	0.0	-1.8	-.88				0	8	PN24nf	DL24eb
38	MBM100474-15CF#ai	1024	4	S	BEX	15n		900m	4.5	0.0	-1.8	-.88				0	8	PN24nf	FL109
39	MBM100474-20C#ai	1024	4	S	BEX	20n		170u	4.5	0.0	-1.8	-.81				0	8	PN24ig	DL24eb
40	MBM100474-20CF#ai	1024	4	S	BEX	20n		170u	4.5	0.0	-1.8	-.81				0	8	PN24ig	FL48
41	MB7077	1024	4	S	BEX	25n	20n	625m	5.2	0.0	-1.4	-1.1	30m			0	7		DL22m
42	MB7067	1024	4	S	BTX	35n	25n	625m	0.0	5.0	.85	2.1	16m	.45		0	7		DLØ
43	RAM125-48A#4	1024	4	S	BTX	125n	130n	4.9 †	5.0	5.0	.80	2.0	30mØ			1	8	A58a	PL3
44	RAM48A#4	1024	4	S	BTX	180n	200n	3.9 †	5.0	5.0	.80	2.0	20m	.40		1	8	A58	PL3
45	RAM248A#4	1024	4	S	BTX	180n	155n	3.9 †	5.0	5.0	.80	2.0	30mØ			1	8	A58a	PL3
46	RAM348A#4	1024	4	S	BTX	300n	300n	3.9 †	5.0	5.0	.80	2.0	30mØ			1	5	A58a	PL3
47	CM2400	1024	4	S	HXX	400n	600n	400u%†	0.0	5.0	.80	2.0	16m	.40		0	7	A25	ML11
48	HM6514-9	1024	4	S	MCG			35m	0.0	5.0	.80	3.0				4	8		
49	HM6514B9	1024	4	S	MCG			35m	0.0	5.0	.80	3.0				4	8	A372	
50	HM6533-9	1024	4	S	MCG			35m	0.0	5.0	.80	3.0				4	8	A406	
51	HM6533C9	1024	4	S	MCG			35m	0.0	5.0	.80	3.0				4	8	A406	
52	HM6148LP-3	1024	4	S	MCG	55n	55n	150n	0.0	5.0	.80	2.4				0	7	A268	DL18m
53	HM6148P-3	1024	4	S	MCG	55n	55n	150m	0.0	5.0	.80	2.4				0	7	A268	DL18m
54	SCM21C14-1D	1024	4	S	MCG	100n	100n		0.0	5.0	0.8	2.0§	2.1m	0.4		5	C	A268	DL18Ø
55	SCM21C14-1E	1024	4	S	MCG	100n	100n		0.0	5.0	0.8	2.0§	2.1m	0.4		0	7	A268	DL18dt
56	SCM21C14-1H	1024	4	S	MCG	100n	100n		0.0	5.0	0.8	2.0§	2.1m	0.4		5	C	A268	CHØ
57	SCM21C14-2D	1024	4	S	MCG	120n	120n		0.0	5.0	0.8	2.0§	2.1m	0.4		5	C	A268	DL18Ø
58	SCM21C14-2E	1024	4	S	MCG	120n	120n		0.0	5.0	0.8	2.0§	2.1m	0.4		0	7	A268	DL18dt
59	SCM21C14-3C	1024	4	S	MCG	150n	150n		0.0	5.0	0.8	2.0§	2.1m	0.4		5	C	A268	DL18ds
60	SCM21C14-3E	1024	4	S	MCG	150n	150n		0.0	5.0	0.8	2.0§	2.1m	0.4		0	7	A268	DL18dt
61	SCM21C14-3H	1024	4	S	MCG	150n	150n		0.0	5.0	0.8	2.0§	2.1m	0.4		5	C	A268	CHØ
62	MWS5114D3#ai	1024	4	S	MCG	200n	200n	500mØ	0.0	6.5	0.8	2.4				5	C	A268	DL18aj
63	MWS5114E3#ai	1024	4	S	MCG	200n	200n	500mØ	0.0	6.5	0.8	2.4				4	8	A268	DL18r
64	SCM21C14-4D	1024	4	S	MCG	200n	200n		0.0	5.0	0.8	2.0§	2.1m	0.4		5	C	A268	DL18Ø
65	SCM21C14-4E	1024	4	S	MCG	200n	200n		0.0	5.0	0.8	2.0§	2.1m	0.4		0	7	A268	DL18dt
66	SCM21C14-4H	1024	4	S	MCG	200n	200n		0.0	5.0	0.8	2.0§	2.1m	0.4		5	C	A268	CHØ
67	MB8414E	1024	4	S	MCG	250n	370n	275u♦	0.0	5.0	0.8	2.2§	1.0uΔ			4	8	PN18o	DL18ak
68	MB8414EC	1024	4	S	MCG	250n	370n	170u	0.0	5.0	.80	2.2§	3.2m	.40		4	8	PN18o	DL18aj
69	MB8414EP	1024	4	S	MCG	250n	370n	170u	0.0	5.0	.80	2.2§	3.2m	.40		4	8	PN18o	DL18ch
70	MWS5114D2#ai	1024	4	S	MCG	250n	250n	500mØ	0.0	6.5	0.8	2.4				5	C	A268	DL18aj
71	MWS5114E2#ai	1024	4	S	MCG	250n	250n	500mØ	0.0	6.5	0.8	2.4				4	8	A268	DL18r
72	M58981S-30	1024	4	S	MCG	300n	300n	75m†	0.0	5.0	.65	2.2	2.0m	.40		0	7	A328	DL18v
73	MWS5114D1#ai	1024	4	S	MCG	300n	300n	500mØ	0.0	6.5	0.8	2.4				5	C	A268	DL18aj
74	MWS5114E1#ai	1024	4	S	MCG	300n	300n	500mØ	0.0	6.5	0.8	2.4				4	8	A268	DL18r
75	SCM5114-1	1024	4	S	MCG	300n	300n	50mØ†	0.0	5.0	0.8	2.0§	1.0uΔ			5	C	PN18o	
76	SCM5114-3	1024	4	S	MCG	300n	300n	50mØ†	0.0	5.0	0.8	2.0§	1.0uΔ			0	7	PN18o	
77	HM9-6533-9	1024	4	S	MCG	350n	475n	500u♦	0.0	5.0	.80	3.0§	2.0m	.40		4	8	A406	FL59
78	HM9-6533C9	1024	4	S	MCG	400n	650n	5.0m♦	0.0	5.0	.80	3.0§	1.6m	.40		4	8	A406	FL59
79	M58981P	1024	4	S	MCG	450n	450n	220m	0.0	5.0	.65	2.2§	2.0m	.40		0	7	A268	DL18v
80	M58981S	1024	4	S	MCG	450n	450n	75m†	0.0	5.0	.65	2.2§	2.0m	.45		0	6	A268	DLØ
81	SCM5114-5	1024	4	S	MCG	450n	450n	50mØ†	0.0	5.0	0.8	2.0§	1.0uΔ			0	7	PN18o	
82	SCM5114-8	1024	4	S	MCG	450n	450n	50mØ†	0.0	5.0	0.8	2.0§	1.0uΔ			0	7	PN18o	
83	TC5514PL	1024	4	S	MCG	450n	450n	138m	0.0	5.0	.65	2.2	2.0m	.40		3	8		DL18j
84	TC5047APL-1	1024	4	S	MCG	550n	650n	110m	0.0	5.0	.60	3.0	1.6m	.40		3	8	A540	DL20f
85	MWS5114-5D	1024	4	S	MCG	650n	500n	500u♦	0.0	5.0	.80	2.4§	2.0m	.40		5	C	A268	DL18aj
86	MWS5114-5E	1024	4	S	MCG	650n	500n	500u♦	0.0	5.0	.80	2.4§	2.0m	.40		4	8	A268	DL18r
87	MWS5114D	1024	4	S	MCG	650n	500n	250u♦	0.0	5.0	.80	2.4§	2.0m	.40		5	C	A268	DL18aj
88	MWS5114E	1024	4	S	MCG	650n	500n	250u♦	0.0	5.0	.80	2.4§	2.0m	.40		4	8	A268	DL18r
89	MWS5114H	1024	4	S	MCG	650n	500n	250u♦	0.0	5.0	.80	2.4§	2.0m	.40		5	C	A268	CHØ
90	MWS6514A-5D	1024	4	S	MCG	650n	500n	500u♦	0.0	5.0	.80	2.4§	2.0m	.40		5	C	A268	DL18aj
91	MWS6514A-5E	1024	4	S	MCG	650n	500n	500u♦	0.0	5.0	.80	2.4§	2.0m	.40		4	8	A268	DL18r
92	MWS6514AD	1024	4	S	MCG	650n	500n	250u♦	0.0	5.0	.80	2.4§	2.0m	.40		5	C	A268	DL18aj
93	MWS6514AE	1024	4	S	MCG	650n	500n	250u♦	0.0	5.0	.80	2.4§	2.0m	.40		4	8	A268	DL18r
94	TC5514PL-1	1024	4	S	MCG	650n	650n	110m	0.0	5.0	.65	2.2	2.0m	.40		3	8		DL18j
95	TC5047APL-2	1024	4	S	MCG	800n	1.0u	110m	0.0	5.0	.60	3.0	1.6m	.40		3	8	A540	DL20f
96	TC5514PL-2	1024	4	S	MCG	800n	800n	110m	0.0	5.0	.80	2.0	2.0m	.40		3	8		DL18j
97	CDP1825CD	1024	4	S	MCS	650n	400n		5	7	0.8	2.4§	2.0m	0.4		5	C	A268	DL18aj
98	CDP1825CE	1024	4	S	MCS	650n	400n		5	7	0.8	2.4§	2.0m	0.4		4	8	A268	DL22u
99	CDP1825CH	1024	4	S	MCS	650n	400n		5.0	7.0	.80	2.4§	2.0m	.40		5	C	A268	CHØ
100	CDP1825D	1024	4	S	MCS	650n	400n		5	11	0.8	2.4§	2.0m	0.4		5	C	A268	DL18aj
101	CDP1825E	1024	4	S	MCS	650n	400n		5	11	0.8	2.4§	2.0m	0.4		4	8	A268	DL22u
102	MCM146514L	1024	4	S	MCX				0.0	5.0						0	7	A268	DL18ai
103	MCM146514P	1024	4	S	MCX				0.0	5.0						0	7	A268	DL18bp
104	PCD5114D	1024	4	S	MCX	200n	140n$		0.3	8.0	0.80	2.2§	4.0m	0.40		2	7	A268	DL18cx
105	PCD5114P	1024	4	S	MCX	200n	140n$		0.3	8.0	0.80	2.2§	4.0m	0.40		2	7	A268	DL18cw

SYMBOLS AND CODES EXPLAINED IN INTERPRETER

2. READ-WRITE MEMORIES (RAMS)

IN ORDER OF (1)No.WORDS(2)No.BITS/WORD (3)MODE(4)STRUCT.(5)MAX ACC.TIME(6)TYPE No.

LINE No.	6 TYPE NUMBER	ORGANIZATION 1 NO. OF WORDS	2 BITS PER WORD	3 MODE	4 STRUC-TURE CODE	5 MAX. ACCESS TIME (S)	MAX. WRITE CYCLE TIME (S)	MAX. POWER DISS. (W)	POWER SUPPLY SPAN NEG. (V)	POS. (V)	INPUT LOGIC LEVELS MAX. '0' (V)	MIN. '1' (V)	MIN.OUTPUT SINK CURRENT (A)	@ OUT (V)	MIN. CLOCK FREQ. (Hz)	OPER TEMP RNGE CODE -	+	DRAWINGS FUNCTIONAL EQUIVALENT NUMBER	OUTLINE
1	M58481S	1024	4	S	MCX	300n	300n	75m	0.0	5.0	.60	2.2	2.4m	.40		0	7		
2	MBM6514	1024	4	S	MCX	300n	300n		0.0	5.0	.80	2.0	3.2m	.45		4	8		DLØ
3	MK2148J-85	1024	4	S	MNØ	70n	70n	500m	0.0	5.0	.80	2.0§	10uΔ			0	7	PN18o	DL18bf
4	MK2148P-85	1024	4	S	MNØ	70n	70n	500m	0.0	5.0	.80	2.0§	10uΔ			0	7	PN18o	DL18au
5	MK2148J-70	1024	4	S	MNØ	85n	85n	600m	0.0	5.0	.80	2.0§	10uΔ			0	7	PN18o	DL18bf
6	MK2148P-70	1024	4	S	MNØ	85n	85n	600m	0.0	5.0	.80	2.0§	10uΔ			0	7	PN18o	DL18au
7	TMS2149-3FPL	1024	4	S	MNG	35n	35n	1.0 Ø	0	5	.8	2.0§	8.0m	.4		0	7	A629a	LL18g
8	TMS2149-3JL#ai	1024	4	S	MNG	35n	35n	660m	0.0	5.0	0.8	2.0§	8.0m	0.4		0	7	A450	DL18ar
9	TMS2149-3NL#ai	1024	4	S	MNG	35n	35n	660m	0.0	5.0	0.8	2.0§	8.0m	0.4		0	7	A450	DL18ar
10	TMS2149-4FPL	1024	4	S	MNG	45n	45n	1.0 Ø	0	5	.8	2.0§	8.0m	.4		0	7	A629a	LL18g
11	TMS2149-4JL#ai	1024	4	S	MNG	45n	45n	660m	0.0	5.0	0.8	2.0§	8.0m	0.4		0	7	A450	DL18ar
12	TMS2149-4NL#ai	1024	4	S	MNG	45n	45n	660m	0.0	5.0	0.8	2.0§	8.0m	0.4		0	7	A450	DL18ar
13	MBM2148-55#ai	1024	4	S	MNG	55n	55n	1.2 Ø	0.0	5.0	.80	2.1§	8.0m	.40		0	7	PN18o	DL18bo
14	MBM2148-55Z	1024	4	S	MNG	55n	55n	1.2	0.0	5.0	0.8	2.1§	8.0m	0.4		0	7	A606	DL18bo
15	MBM2149-55Z#ai	1024	4	S	MNG	55n	55n	1.2 Ø	0.0	5.0	.80	2.1§	8.0m	.40		0	7	PN18o	DL18bo
16	SYMD2149H3#ai	1024	4	S	MNG	55n	70n		0.0	5.0		§				5	C	A418	DL18bn
17	TMS2149-5FPL	1024	4	S	MNG	55n	55n	1.0 Ø	0	5	.8	2.0§	8.0m	.4		0	7	A629a	LL18g
18	TMS2149-5JL#ai	1024	4	S	MNG	55n	55n	660m	0.0	5.0	0.8	2.0§	8.0m	0.4		0	7	A450	DL18ar
19	TMS2149-5NL#ai	1024	4	S	MNG	55n	55n	660m	0.0	5.0	0.8	2.0§	8.0m	0.4		0	7	A450	DL18ar
20	MBM2148-70#ai	1024	4	S	MNG	70n	70n	1.2 Ø	0.0	5.0	.80	2.1§	8.0m	.40		0	7	PN18o	DL18bo
21	MBM2148-70Z	1024	4	S	MNG	70n	70n	1.2	0.0	5.0	0.8	2.1§	8.0m	0.4		0	7	A606	DL18bo
22	SYD2148L	1024	4	S	MNG	70n	70n	1.0 Ø	0.0	5.0	0.8	2.1§	8.0m	0.4		0	7	A418	DL18bn
23	SYMC2148#ai	1024	4	S	MNG	70n	70n		0.0	5.0		§				5	C	A418	DL18cn
24	SYMD2148#ai	1024	4	S	MNG	70n	70n		0.0	5.0		§				5	C	A418	DL18bn
25	SYMD2149H#ai	1024	4	S	MNG	70n	70n		0.0	5.0		§				5	C	A418	DL18bn
26	SYMF2148#ai	1024	4	S	MNG	70n	70n			5.0		§				5	C	A418	FLØ
27	TMS2149-7FPL	1024	4	S	MNG	70n	70n	1.0 Ø	0	5	.8	2.0§	8.0m	.4		0	7	A629a	LL18g
28	TMS2149-7JL#ai	1024	4	S	MNG	70n	70n	660m	0.0	5.0	0.8	2.0§	8.0m	0.4		0	7	A450	DL18ar
29	TMS2149-7NL#ai	1024	4	S	MNG	70n	70n	660m	0.0	5.0	0.8	2.0§	8.0m	0.4		0	7	A450	DL18ar
30	SYMC2148-6#ai	1024	4	S	MNG	85n	85n		0.0	5.0		§				5	C	A418	DL18cn
31	SYMD2148-6#ai	1024	4	S	MNG	85n	85n		0.0	5.0		§				5	C	A418	DL18bn
32	SYMF2148-6#ai	1024	4	S	MNG	85n	85n			5.0		§				5	C	A418	FLØ
33	MBM2114A10LP	1024	4	S	MNG	100n	100n	1.0 Ø	0.0	5.0	.80	2.0§	2.1m	.40		0	7	A268	DL18ch
34	TMS4245JL	1024	4	S	MNG	120n	120n	350m†	0.0	5.0	.80	2.0				0	7	PN18j	DL18b
35	TMS4245NL	1024	4	S	MNG	120n	120n	350m†	0.0	5.0	.80	2.0				0	7	PN18j	DL18f
36	MB8114H	1024	4	S	MNG	150n	150n	1.0 Ø	0.0	5.0	.80	2.0	2.1m	.40		0	7	A268	ML134b
37	MBM2114A15LP	1024	4	S	MNG	150n	150n	1.0 Ø	0.0	5.0	.80	2.0§	2.1m	.40		0	7	A268	DL18ch
38	SYP2114-1	1024	4	S	MNGØ	150n	150n	1.0 Ø	0.0	5.0	0.8	2.0	3.2m	0.4		0	7	A268	DL18g
39	TMS4045-15JDL	1024	4	S	MNG	150n	150n	550m	0.0	5.0	.80	2.0§	3.2m	.40		0	7	A268	DL18ag
40	TMS4045-15JL	1024	4	S	MNG	150n	150n	550m	0.0	5.0	.80	2.0§	3.2m	.40		0	7	A268	DL18b
41	TMS4045-15NL	1024	4	S	MNG	150n	150n	550m	0.0	5.0	.80	2.0§	3.2m	.40		0	7	A268	DL18f
42	TMS4047-15JDL	1024	4	S	MNG	150n	150n	550m	0.0	5.0	.80	2.0§	3.2m	.40		0	7	A339a	ML260
43	TMS4047-15JL	1024	4	S	MNG	150n	150n	550m	0.0	5.0	.80	2.0§	3.2m	.40		0	7	A339a	DL20u
44	TMS4047-15NL	1024	4	S	MNG	150n	150n	550m	0.0	5.0	.80	2.0§	3.2m	.40		0	7	A339a	DL20y
45	Z6114-2CS	1024	4	S	MNG	150n	240n		0.0	5.0	-.30*	2.0				0	7	A527a	DL18at
46	Z6114-2PS	1024	4	S	MNG	150n	240n		0.0	5.0	-.30*	2.0				0	7	A527a	DL18at
47	Z6142-2CS	1024	4	S	MNG	150n	240n		0.0	5.0	-.30*	2.0				0	7	A527	
48	Z6142-2PS	1024	4	S	MNG	150n	240n		0.0	5.0	-.30*	2.0				0	7	A527	
49	2114-2CA	1024	4	S	MNG	200n	200n	500m	0.0	5.0	.80	2.0§	2.1m	.40		0	7	A268	DL18e
50	2114-2CB	1024	4	S	MNG	200n	200n	500m	0.0	5.0	.80	2.0§	2.1m	.40		0	7	A268	DL18ba
51	2114-2CE	1024	4	S	MNG	200n	200n	525m	0.0	5.0	.80	2.0§	2.1m	.40		0	7	A268	DL18az
52	2142-2	1024	4	S	MNG	200n	200n	525m	0.0	5.0	0.8	2.0§	10uΔ	4.5		0	7	A366	
53	C2114-2	1024	4	S	MNG	200n	200n	710m	0.0	5.0	.80	2.4§	2.1m	.40		0	7	A268	ML115c
54	C2142-2	1024	4	S	MNG	200n	200n	475m	0.0	5.0	.80	2.0§	2.1m	.40		0	7	A366	DL20h
55	C2142L-2	1024	4	S	MNG	200n	200n	325m	0.0	5.0	.80	2.0§	2.1m	.40		0	7	A366	DL20h
56	KMS4114	1024	4	S	MNG	200n	340nΔ	150m	0.0	5.0		§							
57	L2114-2CA	1024	4	S	MNG	200n	200n	368m	0.0	5.0	.80	2.0§	2.1m	.40		0	7	A268	DL18e
58	L2114-2CB	1024	4	S	MNG	200n	200n	368m	0.0	5.0	.80	2.0§	2.1m	.40		0	7	A268	DL18ba
59	L2114-2CE	1024	4	S	MNG	200n	200n	368m	0.0	5.0	.80	2.0§	2.1m	.40		0	7	A268	DL18az
60	MB8114E	1024	4	S	MNG	200n	200n	1.0 Ø	0.0	5.0	.80	2.0	2.1m	.40		0	7	A268	ML134b
61	MB8114EL	1024	4	S	MNG	200n	200n	1.0 Ø	0.0	5.0	.80	2.0	2.1m	.40		0	7	A268	ML134b
62	MBM2114A20LP	1024	4	S	MNG	200n	200n	1.0 Ø	0.0	5.0	.80	2.0§	2.1m	.40		0	7	A268	DL18ch
63	MBM2114A20P	1024	4	S	MNG	200n	200n	1.0 Ø	0.0	5.0	.80	2.0§	2.1m	.40		0	7	A268	DL18ch
64	MCM21L14-20L	1024	4	S	MNG	200n		325m	0.0	5.0	.80	2.0§	2.1m	.40		0	7	A268	DL18an
65	MCM21L14-20P	1024	4	S	MNG	200n		325m	0.0	5.0	.80	2.0§	2.1m	.40		0	7	A268	DL18bp
66	MK4114P-3	1024	4	S	MNG	200n		150m†	0.0	5.0	.80	2.0	5.0m	.40				A304	ML134g
67	P2142-2	1024	4	S	MNG	200n	200n	525m	0.0	5.0	.80	2.0§	2.1	.40		0	7	A366	DL20g
68	SFF821L14E-20	1024	4	S	MNG	200n	200n	370m	0.0	5.0	0.8	2.0§	2.1m	0.4		0	7	A268	
69	SFF821L14J-20	1024	4	S	MNG	200n	200n	370m	0.0	5.0	0.8	2.0§	2.1m	0.4		0	7	A268	
70	SFF82114E-20	1024	4	S	MNG	200n	200n	525m	0.0	5.0	0.8	2.0§	2.1m	0.4		0	7	A268	
71	SFF82114J-20	1024	4	S	MNG	200n	200n	525m	0.0	5.0	0.8	2.0§	2.1m	0.4		0	7	A268	
72	SYC2142-2	1024	4	S	MNGØ	200n	200n	500m	0.0	5.0	.80	2.0				0	7	A366a	DL20b
73	SYD2114L2	1024	4	S	MNGØ	200n	200n	1.0 Ø	0.0	5.0	0.8	2.0	3.2m	0.4		0	7	A268	DL18bn
74	SYD2114LV2	1024	4	S	MNGØ	200n	200n	1.0 Ø	0.0	5.0	0.8	2.0	3.2m	0.4		0	7	A268	DL18bn
75	SYD2142-2	1024	4	S	MNGØ	200n	200n	1.0 Ø	0.0	5.0	0.8	2.0	3.2m	0.4		0	7	A366	DL20c
76	SYD2142L2	1024	4	S	MNGØ	200n	200n	1.0 Ø	0.0	5.0	0.85	2.0	3.2m	0.4		0	7	A366	DL20c
77	SYP2142-2	1024	4	S	MNGØ	200n	200n	500m	0.0	5.0	.80	2.0				0	7	A366a	DL20c
78	TMS40L45-20JDL	1024	4	S	MNG	200n	200n	330m	0.0	5.0	.80	2.0§	3.2m	.40		0	7	A268	DL18ag
79	TMS40L45-20JL	1024	4	S	MNG	200n	200n	330m	0.0	5.0	.80	2.0§	3.2m	.40		0	7	A268	DL18b
80	TMS40L45-20NL	1024	4	S	MNG	200n	200n	330m	0.0	5.0	.80	2.0§	3.2m	.40		0	7	A268	DL18f
81	TMS40L47-20JDL	1024	4	S	MNG	200n	200n	330m	0.0	5.0	.80	2.0§	3.2m	.40		0	7	A339a	ML260
82	TMS40L47-20JL	1024	4	S	MNG	200n	200n	330m	0.0	5.0	.80	2.0§	3.2m	.40		0	7	A339a	DL20u
83	TMS40L47-20NL	1024	4	S	MNG	200n	200n	330m	0.0	5.0	.80	2.0§	3.2m	.40		0	7	A339a	DL20y
84	TMS4045-20JDL	1024	4	S	MNG	200n	200n	550m	0.0	5.0	.80	2.0§	3.2m	.40		0	7	A268	DL18ag
85	TMS4045-20JL	1024	4	S	MNG	200n	200n	550m	0.0	5.0	.80	2.0§	3.2m	.40		0	7	A268	DL18b
86	TMS4045-20NL	1024	4	S	MNG	200n	200n	550m	0.0	5.0	.80	2.0§	3.2m	.40		0	7	A268	DL18f
87	TMS4047-20JDL	1024	4	S	MNG	200n	200n	550m	0.0	5.0	.80	2.0§	3.2m	.40		0	7	A339a	ML260
88	TMS4047-20JL	1024	4	S	MNG	200n	200n	550m	0.0	5.0	.80	2.0§	3.2m	.40		0	7	A339a	DL20u
89	TMS4047-20NL	1024	4	S	MNG	200n	200n	550m	0.0	5.0	.80	2.0§	3.2m	.40		0	7	A339a	DL20y
90	uPD444C#	1024	4	S	MNG	200n	200n		0.0	5.0	.80	2.4§	1.0uΔ			4	8	A268	DL18bj
91	uPD6514C	1024	4	S	MNG	200n	200n		0.0	5.0	.80	2.4§	1.0uΔ			4	8	A268	DL18bj
92	Z6114-3CS	1024	4	S	MNG	200n	320n		0.0	5.0	-.30*	2.0				0	7	A527a	DL18at
93	Z6114-3PS	1024	4	S	MNG	200n	320n		0.0	5.0	-.30*	2.0				0	7	A527a	DL18at
94	Z6142-3CS	1024	4	S	MNG	200n	320n		0.0	5.0	-.30*	2.0				0	7	A527	
95	Z6142-3PS	1024	4	S	MNG	200n	320n		0.0	5.0	-.30*	2.0				0	7	A527	
96	MCM21L14-25L	1024	4	S	MNG	250n		325m	0.0	5.0	.80	2.0§	2.1m	.40		0	7	A268	DL18an
97	MCM21L14-25P	1024	4	S	MNG	250n		325m	0.0	5.0	.80	2.0§	2.1m	.40		0	7	A268	DL18bp
98	MK4114P-4	1024	4	S	MNG	250n		150m†	0.0	5.0	.80	2.0	5.0m	.40				A304	ML134g
99	SFF821L14E-25	1024	4	S	MNG	250n	250n	370m	0.0	5.0	0.8	2.0§	2.1m	0.4		0	7	A268	

SYMBOLS AND CODES EXPLAINED IN INTERPRETER

2. READ-WRITE MEMORIES (RAMS)

IN ORDER OF (1)No.WORDS(2)No.BITS/WORD (3)MODE(4)STRUCT.(5)MAX ACC.TIME(6)TYPE No.

LINE No.	6 TYPE NUMBER	ORGANIZATION 1 NO. OF WORDS	2 BITS PER WORD	3 MODE	4 STRUC-TURE CODE	5 MAX. ACCESS TIME (S)	MAX. WRITE CYCLE TIME (S)	MAX. POWER DISS. (W)	POWER SUPPLY SPAN NEG. (V)	POS. (V)	INPUT LOGIC LEVELS MAX. '0' (V)	MIN. '1' (V)	MIN.OUTPUT SINK CURRENT (A)	@ OUT (V)	MIN. CLOCK FREQ. (Hz)	OPER TEMP RNGE CODE -	+	DRAWINGS FUNCTIONAL EQUIVALENT NUMBER	OUTLINE
1	SFF821L14J-25	1024	4	S	MNG	250n	250n	370m	0.0	5.0	0.8	2.0§	2.1m	0.4		0	7	A268	
2	SFF82114E-25	1024	4	S	MNG	250n	250n	525m	0.0	5.0	0.8	2.0§	2.1m	0.4		0	7	A268	
3	SFF82114J-25	1024	4	S	MNG	250n	250n	525m	0.0	5.0	0.8	2.0§	2.1m	0.4		0	7	A268	
4	TMS40L45-25JDL	1024	4	S	MNG	250n	250n	330m	0.0	5.0	.80	2.0§	3.2m	.40		0	7	A268	DL18ag
5	TMS40L45-25JL	1024	4	S	MNG	250n	250n	330m	0.0	5.0	.80	2.0§	3.2m	.40		0	7	A268	DL18b
6	TMS40L45-25NL	1024	4	S	MNG	250n	250n	330m	0.0	5.0	.80	2.0§	3.2m	.40		0	7	A268	DL18f
7	TMS40L47-25JDL	1024	4	S	MNG	250n	250n	330m	0.0	5.0	.80	2.0§	3.2m	.40		0	7	A339a	ML260
8	TMS40L47-25JL	1024	4	S	MNG	250n	250n	330m	0.0	5.0	.80	2.0§	3.2m	.40		0	7	A339a	DL20u
9	TMS40L47-25NL	1024	4	S	MNG	250n	250n	330m	0.0	5.0	.80	2.0§	3.2m	.40		0	7	A339a	DL20y
10	TMS4045-25JDL	1024	4	S	MNG	250n	250n	550m	0.0	5.0	.80	2.0§	3.2m	.40		0	7	A268	DL18ag
11	TMS4045-25JL	1024	4	S	MNG	250n	250n	550m	0.0	5.0	.80	2.0§	3.2m	.40		0	7	A268	DL18b
12	TMS4045-25NL	1024	4	S	MNG	250n	250	550m	0.0	5.0	.80	2.0§	3.2m	.40		0	7	A268	DL18f
13	TMS4047-25JDL	1024	4	S	MNG	250n	250n	550m	0.0	5.0	.80	2.0§	3.2m	.40		0	7	A339a	ML260
14	TMS4047-25JL	1024	4	S	MNG	250n	250n	550m	0.0	5.0	.80	2.0§	3.2m	.40		0	7	A339a	DL20u
15	TMS4047-25NL	1024	4	S	MNG	250n	250n	550m	0.0	5.0	.80	2.0§	3.2m	.40		0	7	A339a	DL20y
16	uPD6514C-1	1024	4	S	MNG	250n	250n		0.0	5.0	.80	2.4§	1.0uΔ			4	8	A268	DL18bj
17	Z6114-4CS	1024	4	S	MNG	250n	380n		0.0	5.0	-.30*	2.0				0	7	A527a	DL18at
18	Z6114-4PS	1024	4	S	MNG	250n	380n		0.0	5.0	-.30*	2.0				0	7	A527a	DL18at
19	Z6142-4CS	1024	4	S	MNG	250n	380n		0.0	5.0	-.30*	2.0				0	7	A527	
20	Z6142-4PS	1024	4	S	MNG	250n	380n		0.0	5.0	-.30*	2.0				0	7	A527	
21	2114-3CA	1024	4	S	MNG	300n	300n	500m	0.0	5.0	.80	2.0§	2.1m	.40		0	7	A268	DL18e
22	2114-3CB	1024	4	S	MNG	300n	300n	500m	0.0	5.0	.80	2.0§	2.1m	.40		0	7	A268	DL18ba
23	2114-3CE	1024	4	S	MNG	300n	300n	525m	0.0	5.0	.80	2.0§	2.1m	.40		0	7	A268	DL18az
24	2142-3	1024	4	S	MNG	300n	300n	525m	0.0	5.0	0.8	2.0§	10uΔ	4.5		0	7	A366	
25	2142L3	1024	4	S	MNG	300n	300n	370m	0.0	5.0	0.8	2.0§	10uΔ	4.5		0	7	A366	
26	C2114-3	1024	4	S	MNG	300n	300n	710m	0.0	5.0	.80	2.4§	2.1m	.40		0	7	A268	ML115c
27	C2114L3	1024	4	S	MNG	300n	300n	370m	0.0	5.0	.80	2.4§	2.1m	.40		0	7	A268	ML115c
28	C2142-3	1024	4	S	MNG	300n	300n	475m	0.0	5.0	.80	2.0§	2.1m	.40		0	7	A366	DL20h
29	C2142L-3	1024	4	S	MNG	300n	300n	325m	0.0	5.0	.80	2.0§	2.1m	.40		0	7	A366	DL20h
30	L2114-3CA	1024	4	S	MNG	300n	300n	368m	0.0	5.0	.80	2.0§	2.1m	.40		0	7	A268	DL18e
31	L2114-3CB	1024	4	S	MNG	300n	300n	368m	0.0	5.0	.80	2.0§	2.1m	.40		0	7	A268	DL18ba
32	L2114-3CE	1024	4	S	MNG	300n	300n	368m	0.0	5.0	.80	2.0§	2.1m	.40		0	7	A268	DL18az
33	M2114-3MA	1024	4	S	MNG	300n	300n	1.0	0.0	5.0	0.8	2.0§	1.0uΔ	.40		0	7	A328	DL18ao
34	M2114-3ME	1024	4	S	MNG	300n	300n	1.0	0.0	5.0	0.8	20§	10uΔ	.40		0	7	A328	DL18Ø
35	MB8114N	1024	4	S	MNG	300n	300n	1.0 Ø	0.0	5.0	.80	2.0	2.1m	.40		0	7	A268	ML134b
36	MB8114NL	1024	4	S	MNG	300n	300n	1.0 Ø	0.0	5.0	.80	2.0	2.1m	.40		0	7	A268	ML134b
37	MCM21L14-30L	1024	4	S	MNG	300n		325m	0.0	5.0	.80	2.0§	2.1m	.40		0	7	A268	DL18an
38	MCM21L14-30P	1024	4	S	MNG	300n		325m	0.0	5.0	.80	2.0§	2.1m	.40		0	7	A268	DL18bp
39	MK4114P-5	1024	4	S	MNG	300n		150m†	0.0	5.0	.80	2.0	5.0m	.40				A304	ML134g
40	N2114-UMA	1024	4	S	MNG	300n	300n	1.0	0.0	5.0	0.8	20§	10uΔ	.40		0	7	A268	DL18Ø
41	N2114-UME	1024	4	S	MNG	300n	300n	1.0	0.0	5.0	0.8	20§	10uΔ	.40		0	7	A268	DL18Ø
42	P2142-3	1024	4	S	MNG	300n	300n	525m	0.0	5.0	.80	2.0§	2.1	.40		0	7	A366	DL20g
43	P2142L3	1024	4	S	MNG	300n	300n	370m	0.0	5.0	.80	2.0§	2.1	.40		0	7	A366	DL20g
44	SFF821L14E-30	1024	4	S	MNG	300n	300n	370m	0.0	5.0	0.8	2.0§	2.1m	0.4		0	7	A268	
45	SFF821L14J-30	1024	4	S	MNG	300n	300n	370m	0.0	5.0	0.8	2.0§	2.1m	0.4		0	7	A268	
46	SFF82114E-30	1024	4	S	MNG	300n	300n	525m	0.0	5.0	.80	2.0§	2.1m	.46		0	7		
47	SFF82114J-30	1024	4	S	MNG	300n	300n	525m	0.0	5.0	0.8	2.0§	2.1m	0.4		0	7	A268	
48	SYC2142-3	1024	4	S	MNG	300n	300n	500m	0.0	5.0	.80	2.0	3.2m	.40		0	7	A366	DL20b
49	SYC2142LV-3	1024	4	S	MNGØ	300n	300n	350m	0.0	5.0	.80	2.0				0	7	A366a	DL20b
50	SYD2114L3	1024	4	S	MNGØ	300n	300n	1.0 Ø	0.0	5.0	0.8	2.0	3.2m	0.4		0	7	A268	DL18bn
51	SYD2114LV3	1024	4	S	MNGØ	300n	300n	1.0 Ø	0.0	5.0	0.8	2.0	3.2m	0.4		0	7	A268	DL18bn
52	SYD2142-3	1024	4	S	MNGØ	300n	300n	1.0 Ø	0.0	5.0	0.8	2.0	3.2m	0.4		0	7	A366	DL20c
53	SYD2142L3	1024	4	S	MNGØ	300n	300n	1.0 Ø	0.0	5.0	0.8	2.0	3.2m	0.4		0	7	A366	DL20c
54	SYMC2114-3	1024	4	S	MNGØ	300n	300n	500m	0.0	5.0	.80	2.0	2.0m	.40		5	C	A268	DL18w
55	SYP2142-3	1024	4	S	MNG	300n	300n	500m	0.0	5.0	.80	2.0	3.2m	.40		0	7	A366	DL20c
56	TMS40L45-30JL	1024	4	S	MNG	300n	300n	1.0 Ø	0.0	5.0	.80	2.0§	2.0m	.40		0	7	A268	ML134d
57	TMS40L45-30NL	1024	4	S	MNG	300n	300n	1.0 Ø	0.0	5.0	.80	2.0§	2.0m	.40		0	7	A268	DL18a
58	TMS40L47-30JL	1024	4	S	MNG	300n	300n	1.0 Ø	0.0	5.0	.80	2.0§	2.0m	.40		0	7	A339a	ML260
59	TMS40L47-30NL	1024	4	S	MNG	300n	300n	1.0 Ø	0.0	5.0	.80	2.0§	2.0m	.40		0	7	A339a	DL20w
60	TMS4045-30JL	1024	4	S	MNG	300n	300n	1.0 Ø	0.0	5.0	.80	2.0§	2.0m	.40		0	7	A268	ML134d
61	TMS4045-30NL	1024	4	S	MNG	300n	300n	1.0 Ø	0.0	5.0	.80	2.0§	2.0m	.40		0	7	A268	DL18a
62	TMS4047-30JL	1024	4	S	MNG	300n	300n	1.0 Ø	0.0	5.0	.80	2.0§	2.0m	.40		0	7	A339a	ML260
63	TMS4047-30NL	1024	4	S	MNG	300n	300n	1.0 Ø	0.0	5.0	.80	2.0§	2.0m	.40		0	7	A339a	DL20w
64	uPD6514C-2	1024	4	S	MNG	300n	300n		0.0	5.0	.80	2.4§	1.0uΔ			4	8	A268	DL18bj
65	V2114-UCB	1024	4	S	MNG	300n	300n	315m	0.0	5.0	0.8	20§	10uΔ	.40		0	7	A268	DL18Ø
66	V2114-UCE	1024	4	S	MNG	300n	300n	315m	0.0	5.0	0.8	20§	10uΔ	.40		0	7	A268	DL18Ø
67	Z6114-5CS	1024	4	S	MNG	300n	440n		0.0	5.0	-.30*	2.0				0	7		DL18at
68	Z6114-5PS	1024	4	S	MNG	300n	440n		0.0	5.0	-.30*	2.0				0	7	A527a	DL18at
69	Z6142-5CS	1024	4	S	MNG	300n	440n		0.0	5.0	-.30*	2.0				0	7	A527	
70	Z6142-5PS	1024	4	S	MNG	300n	440n		0.0	5.0	-.30*	2.0				0	7	A527	
71	Z6114-6CS	1024	4	S	MNG	350n	510n		0.0	5.0	-.30*	2.0				0	7	A527a	DL18at
72	Z6114-6PS	1024	4	S	MNG	350n	510n		0.0	5.0	-.30*	2.0				0	7	A527a	DL18at
73	Z6142-6CS	1024	4	S	MNG	350n	510n		0.0	5.0	-.30*	2.0				0	7	A527	
74	Z6142-6PS	1024	4	S	MNG	350n	510n		0.0	5.0	-.30*	2.0				0	7	A527	
75	2142	1024	4	S	MNG	450n	450n	525m	0.0	5.0	0.8	2.0§	10uΔ	4.5		0	7	A366	
76	2142L	1024	4	S	MNG	450n	450n	370m	0.0	5.0	0.8	2.0§	10uΔ	4.5		0	7	A366	
77	C2114	1024	4	S	MNG	450n	450n	710m	0.0	5.0	.80	2.4§	2.1m	.40		0	7	A268	ML115c
78	C2114L	1024	4	S	MNG	450n	450n	370m	0.0	5.0	.80	2.4§	2.1m	.40		0	7	A268	ML115C
79	C2142	1024	4	S	MNG	450n	450n	475m	0.0	5.0	.80	2.0§	2.1m	.40		0	7	A366	DL20h
80	C2142L	1024	4	S	MNG	450n	450n	325m	0.0	5.0	.80	2.0§	2.1m	.40		0	7	A366	DL20h
81	M5L2114LS	1024	4	S	MNG	450n	450n	358m	0.0	5.0	.80	2.0	2.1m	.40		0	7	A268	DL16ag
82	MCM21L14-45L	1024	4	S	MNG	450n		325m	0.0	5.0	.80	2.0§	2.1m	.40		0	7	A268	DL18an
83	MCM21L14-45P	1024	4	S	MNG	450n		325m	0.0	5.0	.80	2.0§	2.1m	.40		0	7	A268	DL18bp
84	MCM2114L	1024	4	S	MNG	450n	450n	500m	0.0	5.0	.80	2.0§	2.1m	.40		0	7	A268	DLØ
85	MCM2114P	1024	4	S	MNG	450n	450n	500m	0.0	5.0	.80	2.0§	2.1m	.40		0	7	A268	DLØ
86	MD2114	1024	4	S	MNG	450n	450n	575m	0.0	5.0	.80	2.0§	2.1m	.40		6	E	A268	DL18az
87	MM2114N-055	1024	4	S	MNG	450n	450n	475mØ	0.0	5.0	.80	2.0	2.1m	.40		0	5	A268	DL18p
88	SFF821L14E-45	1024	4	S	MNG	450n	450n	370m	0.0	5.0	0.8	2.0§	2.1m	0.4		0	7	A268	
89	SFF821L14J-45	1024	4	S	MNG	450n	450n	370m	0.0	5.0	0.8	2.0§	2.1m	0.4		0	7	A268	
90	SFF82114E-45	1024	4	S	MNG	450n	450n	525m	0.0	5.0	.80	2.0§	2.1m	.46		0	7		
91	SFF82114J-45	1024	4	S	MNG	450n	450n	525m	0.0	5.0	0.8	2.0§	2.1m	0.4		0	7	A268	
92	SYC2142	1024	4	S	MNG	450n	450n	500m	0.0	5.0	.80	2.0	3.2m	.40		0	7	A366	DL20b
93	SYC2142L	1024	4	S	MNG	450n	450n	350m	0.0	5.0	.80	2.0	3.2m	.40		0	7	A366	DL20b
94	SYC2142LV	1024	4	S	MNGØ	450n	450n	350m	0.0	5.0	.80	2.0				0	7	A366a	DL20b
95	SYD2114L	1024	4	S	MNGØ	450n	450n	1.0 Ø	0.0	5.0	0.8	2.0	3.2m	0.4		0	7	A268	DL18bn
96	SYD2114LV	1024	4	S	MNGØ	450n	450n	1.0 Ø	0.0	5.0	0.8	2.0	3.2m	0.4		0	7	A268	DL18bn
97	SYD2142	1024	4	S	MNGØ	450n	450n	1.0 Ø	0.0	5.0	0.8	2.0	3.2m	0.4		0	7	A366	DL20c
98	SYD2142L	1024	4	S	MNGØ	450n	450n	1.0 Ø	0.0	5.0	0.8	2.0	3.2m	0.4		0	7	A366	DL20c
99	SYMC2114	1024	4	S	MNGØ	450n	450n	500m	0.0	5.0	.80	2.0	2.0m	.40		5	C	A268	DL18x
100	SYP2142	1024	4	S	MNG	450n	450n	500m	0.0	5.0	.80	2.0	3.2m	.40		0	7	A366	DL20c
101	SYP2142L	1024	4	S	MNG	450n	450n	350m	0.0	5.0	.80	2.0	3.2m	.40		0	7	A366	DLØ
102	SYP2142LV	1024	4	S	MNGØ	450n	450n	350m	0.0	5.0	.80	2.0				0	7	A366a	DL20c
103	TMS40L45-45JDL	1024	4	S	MNG	450n	450n	330m	0.0	5.0	.80	2.0§	3.2m	.40		0	7	A268	DL18ag
104	TMS40L45-45JL	1024	4	S	MNG	450n	450n	330m	0.0	5.0	.80	2.0§	3.2m	.40		0	7	A268	DL18b
105	TMS40L45-45NL	1024	4	S	MNG	450n	450n	330m	0.0	5.0	.80	2.0§	3.2m	.40		0	7	A268	DL18f
106	TMS40L47-45JDL	1024	4	S	MNG	450n	450n	330m	0.0	5.0	.80	2.0§	3.2m	.40		0	7	A339a	ML260

SYMBOLS AND CODES EXPLAINED IN INTERPRETER

2. READ-WRITE MEMORIES (RAMS)

IN ORDER OF (1)No.WORDS(2)No.BITS/WORD (3)MODE(4)STRUCT.(5)MAX ACC.TIME(6)TYPE No.

LINE No.	6 TYPE NUMBER	ORGANIZATION 1 NO. OF WORDS	2 BITS PER WORD	3 MODE	4 STRUCTURE CODE	5 MAX. ACCESS TIME (S)	MAX. WRITE CYCLE TIME (S)	MAX. POWER DISS. (W)	POWER SUPPLY SPAN NEG. (V)	POS. (V)	INPUT LOGIC LEVELS MAX. '0' (V)	MIN. '1' (V)	MIN.OUTPUT SINK CURRENT (A)	@ OUT (V)	MIN. CLOCK FREQ. (Hz)	OPER TEMP RNGE CODE -	+	DRAWINGS FUNCTIONAL EQUIVALENT NUMBER	OUTLINE
1	TMS40L47-45JL	1024	4	S	MNG	450n	450n	330m	0.0	5.0	.80	2.0§	3.2m	.40		0	7	A339a	DL20u
2	TMS40L47-45NL	1024	4	S	MNG	450n	450n	330m	0.0	5.0	.80	2.0§	3.2m	.40		0	7	A339a	DL20y
3	TMS4045-45JDL	1024	4	S	MNG	450n	450n	550m	0.0	5.0	.80	2.0§	3.2m	.40		0	7	A268	DL18ag
4	TMS4045-45JL	1024	4	S	MNG	450n	450n	550m	0.0	5.0	.80	2.0§	3.2m	.40		0	7	A268	DL18b
5	TMS4045-45NL	1024	4	S	MNG	450n	450n	550m	0.0	5.0	.80	2.0§	3.2m	.40		0	7	A268	DL18f
6	TMS4047-45JDL	1024	4	S	MNG	450n	450n	550m	0.0	5.0	.80	2.0§	3.2m	.40		0	7	A339a	ML260
7	TMS4047-45JL	1024	4	S	MNG	450n	450n	550m	0.0	5.0	.80	2.0§	3.2m	.40		0	7	A339a	DL20u
8	TMS4047-45NL	1024	4	S	MNG	450n	450n	550m	0.0	5.0	.80	2.0§	3.2m	.40		0	7	A339a	DL20y
9	uPD6514C-3	1024	4	S	MNG	450n	450n		0.0	5.0	.80	2.4§	1.0uΔ			4	8	A268	DL18bj
10	SYC2114-2	1024	4	S	MNI∅	200n	200n	1.0 ∅	0.0	5.0	.80	2.0	3.2m	.40		0	7	A268	DL18w
11	SYC2114L-2	1024	4	S	MNI∅	200n	200n	1.0 ∅	0.0	5.0	.80	2.0	3.2m	.40		0	7	A268	DL18w
12	SYP2114-2	1024	4	S	MNI∅	200n	200n	1.0 ∅	0.0	5.0	.80	2.0	3.2m	.40		0	7	A268	DL18g
13	SYP2114LV-2	1024	4	S	MNI∅	200n	200n	1.0 ∅	0.0	5.0	.80	2.0	3.2m	.40		0	7	A268	DL18g
14	SYC2114-3	1024	4	S	MNI∅	300n	300n	1.0 ∅	0.0	5.0	.80	2.0	3.2m	.40		0	7	A268	DL18w
15	SYC2114L-3	1024	4	S	MNI∅	300n	300n	1.0 ∅	0.0	5.0	.80	2.0	3.2m	.40		0	7	A268	DL18w
16	SYP2114-3	1024	4	S	MNI∅	300n	300n	1.0 ∅	0.0	5.0	.80	2.0	3.2m	.40		0	7	A268	DL18g
17	SYP2114LV-3	1024	4	S	MNI∅	300n	300n	1.0 ∅	0.0	5.0	.80	2.0	3.2m	.40		0	7	A268	DL18g
18	SYC2114	1024	4	S	MNI∅	450n	450n	1.0 ∅	0.0	5.0	.80	2.0	3.2m	.40		0	7	A268	DL18w
19	SYC2114L	1024	4	S	MNI∅	450n	450n	1.0 ∅	0.0	5.0	.80	2.0	3.2m	.40		0	7	A268	DL18w
20	SYC2114LV	1024	4	S	MNI∅	450n	450n	1.0 ∅	0.0	5.0	.80	2.0	3.2m	.40		0	7	A268	DL18w
21	SYP2114	1024	4	S	MNI∅	450n	450n	1.0 ∅	0.0	5.0	.80	2.0	3.2m	.40		0	7	A268	DL18g
22	SYP2114L	1024	4	S	MNI∅	450n	450n	1.0 ∅	0.0	5.0	.80	2.0	3.2m	.40		0	7	A268	DL18g
23	SYP2114LV	1024	4	S	MNI∅	450n	450n	1.0 ∅	0.0	5.0	.80	2.0	3.2m	.40		0	7	A268	DL18g
24	2114-1CB	1024	4	S	MNX	150n	150n	525m	0.0	5.0	0.8	2.0§	2.1m	0.4		0	7	A268	DL18c
25	2114-1CE#mil	1024	4	S	MNX	150n	150n	525m	0.0	5.0	0.8	2.0§	2.1m	0.4		0	7	A268	DL18cf
26	4104BCC	1024	4	S	MNX	150n	300n	1.6 ∅	5.0	12	.70	2.4§	2.0m	.50		0	7	A283	ML8r
27	4104BCP	1024	4	S	MNX	150n	300n	1.6 ∅	5.0	12	.70	2.4§	2.0m	.50		0	7	A283	DL22ak
28	L2114-1CB	1024	4	S	MNX	150n	150n	368m	0.0	5.0	0.8	2.0§	2.1m	0.4		0	7	A268	DL18e
29	L2114-1CE#mil	1024	4	S	MNX	150n	150n	368m	0.0	5.0	0.8	2.0§	2.1m	0.4		0	7	A268	DL18cf
30	2114-2CA#mil	1024	4	S	MNX	200n	200n	525m	0.0	5.0	0.8	2.0§	2.1m	0.4		0	7	A268	DL18ce
31	2114-2CE#mil	1024	4	S	MNX	200n	200n	525m	0.0	5.0	0.8	2.0§	2.1m	0.4		0	7	A268	DL18cf
32	2114-2ME	1024	4	S	MNX	200n	200n	400m†	0.0	5.0	0.8	2.0§	2.1m	0.4		2	C	A268	DL18cf
33	4104ACC	1024	4	S	MNX	200n	350n	1.6 ∅	5.0	12	.70	2.4§	2.0m	.50		0	7	A283	ML8r
34	4104ACP	1024	4	S	MNX	200n	350n	1.6 ∅	5.0	12	.70	2.4§	2.0m	.50		0	7	A283	DL22ak
35	4104USC	1024	4	S	MNX	200n	350n	750m	5.0	12	.70	2.4§	2.0m	.50		3	8	A514	DL22h
36	AM9124EDC	1024	4	S	MNX	200n	200n	368m	0.0	5.0	.80	2.0	4.0m	.40		0	7	A268	DL18y
37	AM9124EPC	1024	4	S	MNX	200n	200n	368m	0.0	5.0	.80	2.0	4.0m	.40		0	7	A268	DL18∅
38	L2114-2CA#mil	1024	4	S	MNX	200n	200n	368m	0.0	5.0	0.8	2.0§	2.1m	0.4		0	7	A268	DL18ce
39	L2114-2CE#mil	1024	4	S	MNX	200n	200n	368m	0.0	5.0	0.8	2.0§	2.1m	0.4		0	7	A268	DL18cf
40	L2114-2ME	1024	4	S	MNX	200n	200n	250m†	0.0	5.0	0.8	2.0§	2.1m	0.4		2	C	A268	DL18cf
41	M2114-2MA	1024	4	S	MNX	200n	200n	400m†	0.0	5.0	0.8	2.0§	2.1m	0.4		2	C	A268	DL18ce
42	M4104USC	1024	4	S	MNX	200n	350n	750m	5.0	12	.70	2.4§	2.0m	.50		3	8	A514	DL22h
43	N2114-2MA	1024	4	S	MNX	200n	200n	250m†	0.0	5.0	0.8	2.0§	2.1m	0.4		2	C	A268	DL18ce
44	S2114-2CB	1024	4	S	MNX	200n	200n	210m	0.0	5.0	0.8	2.0§	2.1m	0.4		0	7	A268	DL18e
45	S2114-2CE#mil	1024	4	S	MNX	200n	200n	210m	0.0	5.0	0.8	2.0§	2.1m	0.4		0	7	A268	DL18cf
46	SBB2114LP20	1024	4	S	MNX	200n		590m∅		5.0	0.80	2.0§	2.1m	0.40		0	7	A268	DL18cw
47	4104	1024	4	S	MNX	225n	400n	500m	5.0	12	.80	3.0	2.0m	.50		0	7		
48	4104UMC	1024	4	S	MNX	250n	400n	750m	5.0	12	.70	2.4§	2.0m	.50		5	C	A514	DL22h
49	M4104UMC	1024	4	S	MNX	250n	400n	750m	5.0	12	.70	2.4§	2.0m	.50		5	C	A514	DL22h
50	SBB2114LP25	1024	4	S	MNX	250n		590m∅		5.0	0.80	2.0§	2.1m	0.40		0	7	A268	DL18cw
51	2114-3CA#mil	1024	4	S	MNX	300n	300n	525m	0.0	5.0	0.8	2.0§	2.1m	0.4		0	7	A268	DL18ce
52	2114-3ME	1024	4	S	MNX	300n	300n	400m†	0.0	5.0	0.8	2.0§	2.1m	0.4		2	C	A268	DL18cf
53	21143MA	1024	4	S	MNX	300n	300n	300m†	0.0	5.0	0.8	2.0§	10uΔ	0.4		5	9	A268	DL18ba
54	L2114-3CE#mil	1024	4	S	MNX	300n	300n	368m	0.0	5.0	0.8	2.0§	2.1m	0.4		0	7	A268	DL18cf
55	L2114-3ME	1024	4	S	MNX	300n	300n	250m†	0.0	5.0	0.8	2.0§	2.1m	0.4		2	C	A268	DL18cf
56	L21143MA	1024	4	S	MNX	300n	300n	300m†	0.0	5.0	0.8	2.0§	10uΔ	0.4		5	9	A268	DL18ba
57	N2114-3MA	1024	4	S	MNX	300n	300n	250m†	0.0	5.0	0.8	2.0§	2.1m	0.4		2	C	A268	DL18ce
58	N21143MA	1024	4	S	MNX	300n	300n	300m†	0.0	5.0	0.8	2.0§	10uΔ	0.4		5	9	A268	DL18ba
59	S2114-3CB	1024	4	S	MNX	300n	300n	210m	0.0	5.0	0.8	2.0§	2.1m	0.4		0	7	A268	DL18e
60	S2114-3CE#mil	1024	4	S	MNX	300n	300n	210m	0.0	5.0	0.8	2.0§	2.1m	0.4		0	7	A268	DL18cf
61	SBB2114LP30	1024	4	S	MNX	300n		590m∅		5.0	0.80	2.0§	2.1m	0.40		0	7	A268	DL18cw
62	4804C	1024	4	S	MNX	350n	350n	500m	0.0	5.0	.80	2.4§	2.0m	.50		0	7	A287	ML210b
63	4804B	1024	4	S	MNX	400n	400n	500m	0.0	5.0	.80	2.4§	2.0m	.50		0	7	A287	ML210b
64	4804BCC	1024	4	S	MNX	400n	400n	1.6 ∅	0.0	5.0	.80	2.4§	2.0m	.40		0	7	A329	ML119
65	2114-UCA	1024	4	S	MNX	450n	450n	525m	0.0	5.0	0.8	2.0§	10uΔ			0	7	A268	DL18ba
66	2114UCA	1024	4	S	MNX	450n	300n	1.0 ∅	0.0	5.0	.80	2.4§	2.1m	.40		0	7	A328	ML134b
67	2114UCA#mil	1024	4	S	MNX	450n	450n	525m	0.0	5.0	0.8	2.0§	2.1m	0.4		0	7	A268	DL18ce
68	2114UCB	1024	4	S	MNX	450n	300n	1.0 ∅	0.0	5.0	.80	2.4§	2.1m	.40		0	7	A328	DL18e
69	2114UCE	1024	4	S	MNX	450n	450n	525m	0.0	5.0	.80	2.4§	2.1m	.40		0	7	A328	DL18az
70	2114UCE#mil	1024	4	S	MNX	450n	450n	525m	0.0	5.0	0.8	2.0§	2.1m	0.4		0	7	A268	DL18cf
71	2114UMA	1024	4	S	MNX	450n	450n	525m	0.0	5.0	.80	2.4§	2.1m	.40		5	C	A328	DL18af
72	2114UME	1024	4	S	MNX	450n	450n	400m†	0.0	5.0	0.8	2.0§	2.1m	0.4		2	C	A268	DL18cf
73	2114USA	1024	4	S	MNX	450n	450n	446m	0.0	5.0	.80	2.4§	2.1m	.40		3	8	A328	DL18af
74	4804A	1024	4	S	MNX	450n	450n	500m	0.0	5.0	.80	2.4§	2.0m	.50		0	7	A287	ML210b
75	4804ACC	1024	4	S	MNX	450n	450n	1.6 ∅	0.0	5.0	.80	2.4§	2.0m	.40		0	7	A329	ML119
76	L2114-UCA	1024	4	S	MNX	450n	450n	315m	0.0	5.0	0.8	2.0§	10uΔ			0	7	A268	DL18ba
77	L2114UCA	1024	4	S	MNX	450n	450n	315m	0.0	5.0	.80	2.0§	2.1m	.40		0	7	A268	DL18e
78	L2114UCA#mil	1024	4	S	MNX	450n	450n	315m	0.0	5.0	0.8	2.0§	2.1m	0.4		0	7	A268	DL18ce
79	L2114UCB	1024	4	S	MNX	450n	450n	315m	0.0	5.0	.80	2.0§	2.1m	.40		0	7	A268	DL18ba
80	L2114UCB#mil	1024	4	S	MNX	450n	450n	315m	0.0	5.0	0.87	2.0§	2.1m	0.4		0	7	A268	DL18e
81	L2114UCE	1024	4	S	MNX	450n	450n	315m	0.0	5.0	.80	2.0§	2.1m	.40		0	7	A268	DL18az
82	L2114UCE#mil	1024	4	S	MNX	450n	450n	315m	0.0	5.0	0.8	2.0§	2.1m	0.4		0	7	A268	DL18cf
83	L2114UMA	1024	4	S	MNX	450n	450n	300m†	0.0	5.0	0.8	2.0§	10uΔ	0.4		5	9	A268	DL18ba
84	L2114UME	1024	4	S	MNX	450n	450n	250m†	0.0	5.0	0.8	2.0§	2.1m	0.4		2	C	A268	DL18cf
85	M2114-UMA	1024	4	S	MNX	450n	450n	525m	0.0	5.0	.80	2.4§	2.1m	.40		5	C	A328	DL18af
86	M2114-USA	1024	4	S	MNX	450n	450n	446m	0.0	5.0	.80	2.4§	2.1m	.40		3	8	A328	DL18af
87	M2114UMA	1024	4	S	MNX	450n	450n	400m†	0.0	5.0	0.8	2.0§	2.1m	0.4		2	C	A268	DL18ce
88	N2114UMA	1024	4	S	MNX	450n	450n	250m†	0.0	5.0	0.8	2.0§	2.1m	0.4		2	C	A268	DL18ce
89	S2114UCB	1024	4	S	MNX	450n	450n	210m	0.0	5.0	0.8	2.0§	2.1m	0.4		0	7	A268	DL18e
90	S2114UCE#mil	1024	4	S	MNX	450n	450n	210m	0.0	5.0	0.8	2.0§	2.1m	0.4		0	7		DL18cf
91	SBB2114LP45	1024	4	S	MNX	450n		590m∅		5.0	0.80	2.0§	2.1m	0.40		0	7	A268	DL18cw
92	4804	1024	4	S	MNX	600n	600n	500m	0.0	5.0	.80	2.4	2.0m	.50		0	7	A287	ML210b
93	4804UCC	1024	4	S	MNX	600n	600n	1.6 ∅	0.0	5.0	.80	2.4§	2.0m	.40		0	7	A329	ML119
94	S2114H	1024	4	S	MXX	70n	70n	750m	0.0	5.0	.80	2.0§	8.0m	.40		0	7	A268	DL∅
95	2114AL-1	1024	4	S	MXX	100n	100n	1.0 ∅	0.0	5.0	0.8	2.0§	10uΔ			0	7	A268	
96	2114AL-2	1024	4	S	MXX	120n	120n	1.0 ∅	0.0	5.0	0.8	2.0§	10uΔ			0	7	A268	
97	2114AL-3	1024	4	S	MXX	150n	150n	1.0 ∅	0.0	5.0	0.8	2.0§	10uΔ			0	7	A268	
98	S2114-1CC	1024	4	S	MXX	150n	150n	475mØ	0.0	5.0	.80	2.0§	8.0m	.40		0	7	A268	ML3e
99	S2114-1PC	1024	4	S	MXX	150n	150n	475mØ	0.0	5.0	.80	2.0§	8.0m	.40		0	7	A268	ML3d
100	S2114A1CC	1024	4	S	MXX	150n	150n	225mØ	0.0	5.0	.80	2.0§	8.0m	.40		0	7	A268	ML3e
101	S2114A1PC	1024	4	S	MXX	150n	150n	225mØ	0.0	5.0	.80	2.0§	8.0m	.40		0	7	A268	ML3d
102	S2114L1CC	1024	4	S	MXX	150n	150n	325mØ	0.0	5.0	.80	2.0§	8.0m	.40		0	7	A268	ML3e
103	S2114L1PC	1024	4	S	MXX	150n	150n	325mØ	0.0	5.0	.80	2.0§	8.0m	.40		0	7	A268	ML3d
104	2114A-4	1024	4	S	MXX	200n	200n	1.0 ∅	0.0	5.0	0.8	2.0§	10uΔ			0	7	A268	
105	2114AL-4	1024	4	S	MXX	200n	200n	1.0 ∅	0.0	5.0	0.8	2.0§	10uΔ			0	7	A268	
106	AM9130EPC	1024	4	S	MXX	200n	320n	368m	0.0	5.0	.80	2.0	3.2m	.40		0	7	A433	DL22x
107	S2114-2CC	1024	4	S	MXX	200n	200n	475mØ	0.0	5.0	.80	2.0§	8.0m	.40		0	7	A268	ML3e
108	S2114-2PC	1024	4	S	MXX	200n	200n	475mØ	0.0	5.0	.80	2.0§	8.0m	.40		0	7	A268	ML3d
109	S2114A2CC	1024	4	S	MXX	200n	200n	225mØ	0.0	5.0	.80	2.0§	8.0m	.40		0	7	A268	ML3e
110	S2114A2PC	1024	4	S	MXX	200n	200n	225mØ	0.0	5.0	.80	2.0§	8.0m	.40		0	7	A268	ML3d

SYMBOLS AND CODES EXPLAINED IN INTERPRETER

2. READ-WRITE MEMORIES (RAMS)

IN ORDER OF (1)No.WORDS(2)No.BITS/WORD (3)MODE(4)STRUCT.(5)MAX ACC.TIME(6)TYPE No.

LINE No.	6 TYPE NUMBER	ORGANIZATION 1 NO. OF WORDS	2 BITS PER WORD	3 MODE	4 STRUCTURE CODE	5 MAX. ACCESS TIME (S)	MAX. WRITE CYCLE TIME (S)	MAX. POWER DISS. (W)	POWER SUPPLY SPAN NEG. (V)	POS. (V)	INPUT LOGIC LEVELS MAX. '0' (V)	MIN. '1' (V)	MIN.OUTPUT SINK CURRENT (A)	@ OUT (V)	MIN. CLOCK FREQ. (Hz)	OPER TEMP RNGE CODE -	+	DRAWINGS FUNCTIONAL EQUIVALENT NUMBER	OUTLINE
1	S2114L2CC	1024	4	S	MXX	200n	200n	325mØ	0.0	5.0	.80	2.0§	8.0m	.40		0	7	A268	ML3e
2	S2114L2PC	1024	4	S	MXX	200n	200n	325mØ	0.0	5.0	.80	2.0§	8.0m	.40		0	7	A268	ML3d
3	2114A-5	1024	4	S	MXX	250n	250n	1.0 ⊠	0.0	5.0	0.8	2.0§	10uΔ			0	7	A268	
4	AM91L30DPC	1024	4	S	MXX	250n	395n	368m	0.0	5.0	.80	2.0	3.2m	.40		0	7	A433	DL22x
5	AM9130DPC	1024	4	S	MXX	250n	395n	578m	0.0	5.0	.80	2.0	3.2m	.40		0	7	A433	DL22x
6	AM91L30CPC	1024	4	S	MXX	300n	470n	368m	0.0	5.0	.80	2.0	3.2m	.40		0	7	A433	DL22x
7	AM9130CPC	1024	4	S	MXX	300n	470n	578m	0.0	5.0	.80	2.0	3.2m	.40		0	7	A433	DL22x
8	S2114-3CC	1024	4	S	MXX	300n	300n	475mØ	0.0	5.0	.80	2.0§	8.0m	.40		0	7	A268	ML3e
9	S2114-3PC	1024	4	S	MXX	300n	300n	475mØ	0.0	5.0	.80	2.0§	8.0m	.40		0	7	A268	ML3d
10	S2114A3CC	1024	4	S	MXX	300n	300n	225mØ	0.0	5.0	.80	2.0§	8.0m	.40		0	7	A268	ML3e
11	S2114A3PC	1024	4	S	MXX	300n	300n	255mØ	0.0	5.0	.80	2.0§	8.0m	.40		0	7	A268	ML3d
12	S2114L3CC	1024	4	S	MXX	300n	300n	325mØ	0.0	5.0	.80	2.0§	8.0m	.40		0	7	A268	ML3e
13	S2114L3PC	1024	4	S	MXX	300n	300n	325mØ	0.0	5.0	.80	2.0§	8.0m	.40		0	7	A268	ML3d
14	AM91L30BPC	1024	4	S	MXX	400n	620n	368m	0.0	5.0	.80	2.0	3.2m	.40		0	7	A433	DL22x
15	AM9130BPC	1024	4	S	MXX	400n	620n	578m	0.0	5.0	.80	2.0	3.2m	.40		0	7	A433	DL22x
16	AM91L30APC	1024	4	S	MXX	500n	770n	368m	0.0	5.0	.80	2.0	3.2m	.40		0	7	A433	DL22x
17	AM9130APC	1024	4	S	MXX	500n	770n	578m	0.0	5.0	.80	2.0	3.2m	.40		0	7	A433	DL22x
18	9010-1231	1024	8		MNX	250n		3.6	0.0	5.0						0	6		
19	9010-1210	1024	8		MNX	500n		3.7	0.0	5.0						0	6		
20	9010-1250	1024	8		MNX	500n		1.8	0.0	24						0	6		
21	30C01	1024	8	D	HNC	220n	350n	10	6.0	10	.80†	2.0	15m#	5.0	167kΔ	1	5		PL5a
22	MK4808-2	1024	8	D	MNG	150n	270n	150m	0.0	5.0	.80	2.2	4.0m	.40	500 Δ	0	7		
23	MK4809-2	1024	8	D	MNG	150n	270n	150m	0.0	5.0	.80	2.2	4.0m	.40	500 Δ	0	7		
24	MK4808-3	1024	8	D	MNG	200n	360n	150m	0.0	5.0	.80	2.2	4.0m	.40	500 Δ	0	7		
25	MK4809-3	1024	8	D	MNG	200n	360n	150m	0.0	5.0	.80	2.2	4.0m	.40	500 Δ	0	7		
26	MK4808-4	1024	8	D	MNG	250n	450n	150m	0.0	5.0	.80	2.2	4.0m	.40	500 Δ	0	7		
27	MK4809-4	1024	8	D	MNG	250n	450n	150m	0.0	5.0	.80	2.2	4.0m	.40	500 Δ	0	7		
28	MK4809-5	1024	8	D	MNG	300n	540n	150m	0.0	5.0	.80	2.2	4.0m	.40	500 Δ	0	7		
29	15C51	1024	8	S	BTX	125n	150n	48	0.0	5.0	.80†	2.0	15m#	5.0	167kΔ	1	5		PL5
30	RAM88B#1	1024	8	S	BTX	180n	200n	6.6 †	5.0	5.0	.80	2.0	20m	.40		1	8	A58b	PL3a
31	RAM288B#1	1024	8	S	BTX	180n	155n	6.6 †	5.0	5.0	.80	2.0	30m⊠			1	8	A58c	PL3a
32	RAM388B#1	1024	8	S	BTX	300n	300n	6.6 †	5.0	5.0	.80	2.0	30m⊠			1	5	A58c	PL3a
33	SCP1833	1024	8	S	MCG	350n		120m†	0.0	10	.01%	9.99				5	C	A501	DL⊠
34	SCP1833L	1024	8	S	MCG	850n		30m†	0.0	5.0	.01%	4.99				5	C	A501	DL⊠
35	MK4801P-55	1024	8	S	MNG	55n	55n	625m	0.0	5.0	.80	2.1§	4.0m	.40		0	7	A415	ML207e
36	MK4801P-70	1024	8	S	MNG	70n	70n	625m	0.0	5.0	.80	2.1§	4.0m	.40		0	7	A415	ML207e
37	MK4801P-90	1024	8	S	MNG	90n	90n	625m	0.0	5.0	.80	2.1§	4.0m	.40		0	7	A415	ML207e
38	MK4118J-1	1024	8	S	MNG	120n	120n	400m†	0.0	5.0	0.8	2.2	10uΔ			0	7	A415	DL24cv
39	MK4118N-1	1024	8	S	MNG	120n	120n	400m	0.0	5.0	.80	2.2§	4.0m	.40		0	7	A415	DL24an
40	MK4118P-1	1024	8	S	MNG	120n	120n	400m	0.0	5.0	.80	2.2§	4.0m	.40		0	7	A415	ML207e
41	MK4118J-2	1024	8	S	MNG	150n	150n	400m†	0.0	5.0	0.8	2.2	10uΔ			0	7	A415	DL24cv
42	MK4118N-2	1024	8	S	MNG	150n	150n	400m	0.0	5.0	.80	2.2§	4.0m	.40		0	7	A415	DL24an
43	MK4118P-2	1024	8	S	MNG	150n	150n	400m	0.0	5.0	.80	2.2§	4.0m	.40		0	7	A415	ML207e
44	MKB4118J-82	1024	8	S	MNG	150n	150n	1.0 ⊠	0.0	5.0	.80	2.4	10uΔ	5.0		5	C	A532	
45	MKB4118P-82	1024	8	S	MNG	150n	150n	1.0 ⊠	0.0	5.0	.80	2.4	10uΔ	5.0		5	C	A532	
46	uPD421D-5	1024	8	S	MNG	150n	150n		0.0	5.0	.80	2.0§	50uΔ	5.5		0	7	A515	DL22r
47	MK4118J-3	1024	8	S	MNG	200n	200n	400m†	0.0	5.0	0.8	2.2	10uΔ			0	7	A415	DL24cv
48	MK4118N-3	1024	8	S	MNG	200n	200n	400m	0.0	5.0	.80	2.2§	4.0m	.40		0	7	A415	DL24an
49	MK4118P-3	1024	8	S	MNG	200n	200n	400m	0.0	5.0	.80	2.2§	4.0m	.40		0	7	A415	ML207e
50	MKB4118J-83	1024	8	S	MNG	200n	200n	1.0 ⊠	0.0	5.0	.80	2.4	10uΔ	5.0		5	C	A532	
51	MKB4118P-83	1024	8	S	MNG	200n	200n	1.0 ⊠	0.0	5.0	.80	2.4	10uΔ	5.0		5	C	A532	
52	uPD421D-3	1024	8	S	MNG	200n	200n		0.0	5.0	.80	2.0§	50uΔ	5.5		0	7	A515	DL22r
53	MK4118J-4	1024	8	S	MNG	250n	250n	400m†	0.0	5.0	0.8	2.2	10uΔ			0	7	A415	DL24cv
54	MK4118N-4	1024	8	S	MNG	250n	250n	400m	0.0	5.0	.80	2.2§	4.0m	.40		0	7	A415	DL24an
55	MK4118P-4	1024	8	S	MNG	250n	250n	400m	0.0	5.0	.80	2.2§	4.0m	.40		0	7	A415	ML207e
56	uPD421D-2	1024	8	S	MNG	250n	250n		0.0	5.0	.80	2.0§	50u	5.5		0	7	A515	DL22r
57	8108-3MD	1024	8	S	MNG	300n	450n	1.6	0.0	5.0	0.8	2.0	10uΔ	.40		0	7	A330	DL22aa
58	8118-3MD	1024	8	S	MNG	300n	450n	1.6	0.0	5.0	5.25	.50	10uΔ	.40		0	7	A330	DL22aa
59	M8108-3MD	1024	8	S	MNG	300n	450n	1.6	0.0	5.0	0.8	2.0	10uΔ	.40		0	7	A330	DL22aa
60	M8118-3MD	1024	8	S	MNG	300n	450n	1.6	0.0	5.0	0.8	2.0	10uΔ	.40		0	7	A330	DL22aa
61	R8108-3C	1024	8	S	MNG⊠	300n	450n	270m	0.0	5.0	0.8	2.0	10uΔ	0.4		0	6	A330	DL22ah
62	R8108-3P	1024	8	S	MNG⊠	300n	450n	270m	0.0	5.0	0.8	2.0	10uΔ	0.4		0	6	A330	DL22ah
63	uPD421D-1	1024	8	S	MNG	300n	300n		0.0	5.0	.80	2.0§	50uΔ	5.5		0	7	A515	DL22r
64	R8108-4C	1024	8	S	MNG⊠	400n	575n	270m	0.0	5.0	0.8	2.0	10uΔ	0.4		0	6	A330	DL22ah
65	R8108-4P	1024	8	S	MNG⊠	400n	575n	270m	0.0	5.0	0.8	2.0	10uΔ	0.4		0	6	A330	DL22ah
66	TMS4008NL0	1024	8	S	MNG	450n	450n	475m	0.0	5.0		§				0	7	PN24jd	DL24by
67	TMS4008NL1	1024	8	S	MNG	450n	450n	475m	0.0	5.0		§				0	7	PN24jd	DL24by
68	uPD421D	1024	8	S	MNG	450n	450n		0.0	5.0	.80	2.0§	50uΔ	5.5		0	7	A515	DL22r
69	8108-5MD	1024	8	S	MNG	500n	700n	1.6	0.0	5.0	5.25	.50	10uΔ	.40		0	7	A330	DL22aa
70	8118-5MD	1024	8	S	MNG	500n	700n	1.6	0.0	5.0	5.25	.50	10uΔ	.40		0	7	A330	DL22aa
71	M8108-5MD	1024	8	S	MNG	500n	700n	1.6	0.0	5.0	0.8	2.0	10uΔ	.40		0	7	A330	DL22aa
72	M8118-5MD	1024	8	S	MNG	500n	700n	1.6	0.0	5.0	0.8	2.0	10uΔ	.40		0	7	A330	DL22aa
73	R8108-5C	1024	8	S	MNG⊠	500n	700n	270m	0.0	5.0	0.8	2.0	10uΔ	0.4		0	6	A330	DL22ah
74	R8108-5P	1024	8	S	MNG⊠	500n	700n	270m	0.0	5.0	0.8	2.0	10uΔ	0.4		0	6	A330	DL22ah
75	8108-3CD	1024	8	S	MNX	300n	450n	250m	0.0	5.0	.80	2.0	2.1m	.40		0	7	A330	DL22aa
76	8118-3CJ	1024	8	S	MNX	300n	450n	250m	0.0	5.0	.80	2.0	2.1m	.40		0	7	A330a	DL24s
77	8308	1024	8	S	MNX	300n	450n	250m	0.0	5.0	.80	2.4	2.1m	.40		0	7	A330a	DL⊠
78	8108-5CD	1024	8	S	MNX	500n	700n	250m	0.0	5.0	.80	2.0	2.1m	.40		0	7	A330	DL22aa
79	8118-5CJ	1024	8	S	MNX	500n	700n	250m	0.0	5.0	.80	2.0	2.1m	.40		0	7	A330a	DL24s
80	30C02	1024	9	D	HNC	220n	350n	10	6.0	10	.80†	2.0	15m#	5.0	167kΔ	1	5		PL5a
81	15C52	1024	9	S	BTX	125n	150n	55	0.0	5.0	.80†	2.0	15m#	5.0	167kΔ	1	5		PL5
82	RAM89B	1024	9	S	BTX	180n	200n	7.6 †	5.0	5.0	.80	2.0	20m	.40		1	8	A58c	PL3a
83	RAM289B	1024	9	S	BTX	180n	155n	7.6 †	5.0	5.0	.80	2.0	30m⊠			1	8	A58c	PL3a
84	RAM389B	1024	9	S	BTX	300n	300n	7.6 †	5.0	5.0	.80	2.0	30m⊠			1	5	A58c	PL3a
85	ASM30#3	1024	9	S	MXX	300n	300n	35	0.0	5.0	.60	2.5	16m	.40		0	5		
86	811-01	1024	10	S	BTX	70n	75n	28	0.0	5.0	2.4	.40				0	6	A55	
87	30C25	1024	16	D	HNC	220n	350n	16	6.0	10	.80†	2.0	15m#	5.0	167kΔ	1	5		PL5a
88	15C12	1024	16	S	BTX	125n	150n	50	0.0	5.0	.80†	2.0	15m#	5.0	167kΔ	1	5		PL5
89	30C15	1024	18	D	HNC	220n	350n	16	6.0	10	.80†	2.0	15m#	5.0	167kΔ	1	5		PL5a
90	15C07	1024	18	S	BTX	125n	150n	55	0.0	5.0	.80†	2.0	15m#	5.0		1	5		PL5
91	MB8202	2048	1	D	MNG	90n	135n	360m†	5.2	17	.80	10.9				0	7	A227	ML215
92	RA9-2048	2048	1	D	MPG	250n	400n	150u%	20	5.0	-20	-1.5	12m	-20	250 Δ	0	7	F148	ML92
93	2048	2048	1	D	MPG	350n	600n	100u%†	19	2.0	-12	-1.5			100 Δ	0	7	A18	ML12
94	RA9-2000	2048	1	D	MPG	360n	615n	200m	15	5.0	.80	3.0	600u	1.8		0	7		ML92
95	MM5262D	2048	1	D	MPG	365n	635n	400m	15	5.0	.80	3.5	10uΔ	0.0	500 Δ	0	7	A207	ML201
96	MM5262N	2048	1	D	MPG	365n	635n	400m	15	5.0	.80	3.5	10uΔ	0.0	500 Δ	0	7	A207	DL22v
97	CM1801	2048	1	D	MPG	450n	800nΔ		13	5.0	1.0	3.5	1.0uΔ	0.0	500 Δ	0	7	A23	DL⊠
98	MM4262D	2048	1	D	MPG	470n	750n	360m	15	5.0	.80	3.5	10uΔ	0.0	1.0kΔ	5	C	A207	ML201
99	IM6003-11CDF	2048	1	D	MPX	350n	575n	140u%	15	8.0	.50	3.5			500 Δ	0	7	A321	ML241
100	IM600311	2048	1	D	MPX	350n	575n	140u%	15	5.0	.50	3.5	600u♦		500 Δ	0	7	A87	ML241
101	91600311	2048	1	D	MPX	360n	595n	200m	15	5.0	.50	3.5	600u♦		500 Δ	0	7	A87	ML8
102	IM6003-10CDF	2048	1	D	MPX	460n	695n	130u%	15	8.5	.50	4.0			500 Δ	0	7	A321	ML241
103	IM600310	2048	1	D	MPX	460n	695n	130u%	15	5.0	.50	4.0	600u♦		500 Δ	0	7	A87	ML241
104	RAM125-28A#2	2048	1	S	BTX	125n	130n	3.8 †	5.0	5.0	.80	2.0	30m⊠			1	8	A58a	PL3
105	RAM28A#2	2048	1	S	BTX	180n	200n	2.8 †	5.0	5.0	.80	2.0	20m	.40		1	8	A58	PL3
106	RAM228A#2	2048	1	S	BTX	180n	155n	2.8 †	5.0	5.0	.80	2.0	30m⊠			1	8	A58a	PL3
107	RAM328A#2	2048	1	S	BTX	300n	300n	2.8 †	5.0	5.0	.80	2.0	30m⊠			1	5	A58a	PL3
108	CM2405	2048	1	S	HXX	400n	600n	400u%†	0.0	5.0	.80	2.0	16m	.40		0	7	A25	ML11
109	HM6503-9	2048	1	S	MCG			35m	0.0	5.0	.80	3.0				4	8		
110	IM7003	2048	1	S	MNG	60n	180n	300u%	3.0	15						0	7	PN22g	DL⊠

SYMBOLS AND CODES EXPLAINED IN INTERPRETER

2. READ-WRITE MEMORIES (RAMS)

IN ORDER OF (1)No.WORDS(2)No.BITS/WORD (3)MODE(4)STRUCT.(5)MAX ACC.TIME(6)TYPE No.

LINE No.	6 TYPE NUMBER	ORGANIZATION 1 NO. OF WORDS	2 BITS PER WORD	3 MODE	4 STRUCTURE CODE	5 MAX. ACCESS TIME (S)	MAX. WRITE CYCLE TIME (S)	MAX. POWER DISS. (W)	POWER SUPPLY SPAN NEG. (V)	POS. (V)	INPUT LOGIC LEVELS MAX. '0' (V)	MIN. '1' (V)	MIN.OUTPUT SINK CURRENT (A)	@ OUT (V)	MIN. CLOCK FREQ. (Hz)	OPER TEMP RNGE CODE -	+	DRAWINGS FUNCTIONAL EQUIVALENT NUMBER	OUTLINE
1	IM7003-12CDF	2048	1	S	MNX	60n	180n	250u%	0.0	15	.80	2.4				0	7	A323	ML241
2	IM7003-12CPF	2048	1	S	MNX	60n	180n	250u%	0.0	15	.80	2.4				0	7	A323	ML212c
3	SMA2001	2048	1	S	MXX	125n	150n	1.3 †Ø	5.0	5.0	.80	2.0	16m	.40		0	7	A652	ML75
4	RAM125-48A#3	2048	2	S	BTX	125n	130n	4.9 †	5.0	5.0	.80	2.0	30mØ			1	8	A58a	PL3
5	RAM48A#3	2048	2	S	BTX	180n	200n	3.9 †	5.0	5.0	.80	2.0	20m	.40		1	8	A58	PL3
6	RAM248A#3	2048	2	S	BTX	180n	155n	3.9 †	5.0	5.0	.80	2.0	30mØ			1	8	A58a	PL3
7	RAM348A#3	2048	2	S	BTX	300n	300n	3.9 †	5.0	5.0	.80	2.0	30mØ			1	5	A58a	PL3
8	PD550#1	2048	2	S	HXX	100n	125n	2.0 †	0.0	5.0	-.35	-.08				0	7	A6	FL1
9	CM2401	2048	2	S	HXX	400n	600n	400u%†	0.0	5.0	.80	2.0	16m	.40		0	7	A25	ML11
10	RAM88B#4	2048	4	S	BTX	180n	200n	6.6 †	5.0	5.0	.80	2.0	20m	.40		1	8	A58b	PL3a
11	RAM288B#4	2048	4	S	BTX	180n	155n	6.6 †	5.0	5.0	.80	2.0	30mØ			1	8	A58c	PL3a
12	RAM388B#4	2048	4	S	BTX	300n	300n	6.6 †	5.0	5.0	.80	2.0	30mØ			1	5	A58c	PL3a
13	25C16	2048	8	D	HNC	150n	275n	15	6.0	10	.80†	2.0	15m#	5.0	167kΔ	1	5		PL5
14	30C50	2048	8	D	HNC	220n	350n	15	6.0	10	.80†	2.0	15m#	5.0	167kΔ	1	5		PL5
15	MK4816-2	2048	8	D	MNG	150n	270n	150m	0.0	5.0	.80	2.2	4.0m	.40	500 Δ	0	7		
16	MK4816-3	2048	8	D	MNG	200n	360n	150m	0.0	5.0	.80	2.2	4.0m	.40	500 Δ	0	7		
17	MK4816-4	2048	8	D	MNG	250n	450n	150m	0.0	5.0	.80	2.2	4.0m	.40	500 Δ	0	7		
18	MK4816-5	2048	8	D	MNG	300n	540n	150m	0.0	5.0	.80	2.2	4.0m	.40	500 Δ	0	7		
19	MK4816N-3	2048	8	P	MNG	200n	430nΔ	150m	0.0	5.0	0.8	2.2	10uΔ			0	7	A538	
20	ID2128-15#ai	2048	8	S		150n	150n	1.0 Ø	0.0	5.0	.80	2.0	4.0m	.40		0	7	PN24ir	DL24c
21	IP2128-15#ai	2048	8	S		150n	150n	1.0 Ø	0.0	5.0	.80	2.0	4.0m	.40		0	7	PN24ir	DL24ca
22	MB2128-15#ai	2048	8	S		150n	150n	1.0 Ø	0.0	5.0	.80	2.0	4.0m	.40		0	7	PN24ir	DL24aw
23	MC2128-15#ai	2048	8	S		150n	150n	1.0 Ø	0.0	5.0	.80	2.0	4.0m	.40		0	7	PN24ir	DL24f
24	MP2128-15#ai	2048	8	S		150n	150n	1.0 Ø	0.0	5.0	.80	2.0	4.0m	.40		0	7	PN24ir	DL24ca
25	IP2128-20#ai	2048	8	S		200n	200n	1.0 Ø	0.0	5.0	.80	2.0	4.0m	.40		0	7	PN24ir	DL24ca
26	MB2128-20#ai	2048	8	S		200n	200n	1.0 Ø	0.0	5.0	.80	2.0	4.0m	.40		0	7	PN24ir	DL24aw
27	MC2128-20#ai	2048	8	S		200n	200n	1.0 Ø	0.0	5.0	.80	2.0	4.0m	.40		0	7	PN24ir	DL24f
28	MP2128-20#ai	2048	8	S		200n	200n	1.0 Ø	0.0	5.0	.80	2.0	4.0m	.40		0	7	PN24ir	DL24ca
29	NVRM1A	2048	8	S		350n	300n$	2.5		7.0	0.80	2.0§	2.0m			3	8	A709	X21
30	15C06	2048	8	S	BTX	125n	150n	48	0.0	5.0	.80†	2.0	15m#	5.0	167kΔ	1	5		PL5
31	MB8416A12Z#ai	2048	8	S	MCG	120n	120n		0.0	5.0	.80	2.2						A564	DL24fz
32	MB8417A12P#ai	2048	8	S	MCG	120n	120n		0.0	5.0	.80	2.2				4	8	A555a	DL24fz
33	MB8417A12Z#ai	2048	8	S	MCG	120n	120n		0.0	5.0	.80	2.2				0	7	A555a	DL24fz
34	MB8418A12P#ai	2048	8	S	MCG	120n	120n		0.0	5.0	.80	2.2				0	7	A555b	DL24ga
35	MB8418A12Z#ai	2048	8	S	MCG	120n	120n		0.0	5.0	.80	2.2				0	7	A555b	DL24fz
36	MCM65116-12C	2048	8	S	MCG	120n	120n	1.2 Ø	0.0	5	0.8	2.2§	2.1m	0.4		0	7	A489	DL24go
37	MCM65116-12P	2048	8	S	MCG	120n	120n	1.2 Ø	0.0	5	0.8	2.2§	2.1m	0.4		0	7	A489	DL24ek
38	MB8416-15Z	2048	8	S	MCG	150n	150n	55u	0.0	5.0	.80	2.2§	4.0m	.40		0	7	A564	DL24fz
39	MB8416A15Z#ai	2048	8	S	MCG	150n	150n		0.0	5.0	.80	2.2						A564	DL24fz
40	MB8417-15P	2048	8	S	MCG	150n	150n	55u	0.0	5.0	.80	2.2§	4.0m	.40		0	7	A555a	DL24ga
41	MB8417-15Z	2048	8	S	MCG	150n	150n	55u	0.0	5.0	.80	2.2§	4.0m	.40		0	7	A555a	DL24fz
42	MB8417A15P#ai	2048	8	S	MCG	150n	150n		0.0	5.0	.80	2.2				4	8	A555a	DL24ga
43	MB8417A15Z#ai	2048	8	S	MCG	150n	150n		0.0	5.0	.80	2.2				0	7	A555a	DL24ga
44	MB8418A15P#ai	2048	8	S	MCG	150n	150n		0.0	5.0	.80	2.2				4	8	A555b	DL24ga
45	MB8418A15Z#ai	2048	8	S	MCG	150n	150n		0.0	5.0	.80	2.2				4	8	A555b	DL24fz
46	MCM65116-15C	2048	8	S	MCG	150n	150n	1.2 Ø	0.0	5	0.8	2.2§	2.1m	0.4		0	7	A489	DL24go
47	MCM65116-15P	2048	8	S	MCG	150n	150n	1.2 Ø	0.0	5	0.8	2.2§	2.1m	0.4		0	7	A489	DL24ek
48	MB8416-20Z	2048	8	S	MCG	200n	200n	55u	0.0	5.0	.80	2.2§	4.0m	.40		4	8	A564	DL24fz
49	MB8417-20Z	2048	8	S	MCG	200n	200n	55u	0.0	5.0	.80	2.2§	4.0m	.40		4	8	A555a	DL24fz
50	MB8418	2048	8	S	MCG	200n	200n		0.0	5.0	.80	2.2	4.0m	.40		4	8	A555b	PN24Ø
51	MB8418-20Z	2048	8	S	MCG	200n	200n	55u	0.0	5.0	.80	2.2§	4.0m	.40		4	8	A555b	DL24fz
52	MCM65116-20C	2048	8	S	MCG	200n	200n	1.2 Ø	0.0	5	0.8	2.2§	2.1m	0.4		0	7	A489	DL24go
53	MCM65116-20P	2048	8	S	MCG	200n	200n	1.2 Ø	0.0	5	0.8	2.2§	2.1m	0.4		0	7	A489	DL24ek
54	TC5516BP	2048	8	S	MCG	200n	200n	800mØ	0.0	5.0	0.8	2.2§	2.0m	0.4		3	8	A567	DL24fb
55	TC5516BPL	2048	8	S	MCG	200n	200n	800mØ	0.0	5.0	0.8	2.2§	2.0m	0.4		3	8	A567	DL24fb
56	MB8416-25P	2048	8	S	MCG	250n	250n	55u	0.0	5.0	.80	2.2§	4.0m	.40		4	8	A564	DL24ga
57	MB8416-25Z	2048	8	S	MCG	250n	250n	55u	0.0	5.0	.80	2.2§	4.0m	.40		4	8	A564	DL24fz
58	MB8417-25P	2048	8	S	MCG	250n	250n	55u	0.0	5.0	.80	2.2§	4.0m	.40		4	8	A555a	DL24ga
59	MB8417-25Z	2048	8	S	MCG	250n	250n	55u	0.0	5.0	.80	2.2§	4.0m	.40		4	8	A555a	DL24fz
60	MB8418-25P	2048	8	S	MCG	250n	250n	55u	0.0	5.0	.80	2.2§	4.0m	.40		4	8	A555b	DL24ga
61	MB8418-25Z	2048	8	S	MCG	250n	250n	55u	0.0	5.0	.80	2.2§	4.0m	.40		4	8	A555b	DL24fz
62	TC5516P	2048	8	S	MCG	250n	250n	385m	0.0	5.0	0.8	2.2	2.0m	0.4		0	7	A522	DL24ai
63	HM6117LFP3	2048	8	S	MCX	120n	150n	1.0 Ø	0.0	5	0.8	2.2§	2.1m	0.4		0	7	A561	FL91
64	HM6117FP3#ai	2048	8	S	MCX	150n	150n	200m†	0.0	5.0	0.8	2.2	2.1m	0.4		0	7	A562	FL91
65	HM6117FP4#ai	2048	8	S	MCX	200n	200n	180m†	0.0	5.0	0.8	2.2	2.1m	0.4		0	7	A562	FL91
66	HM6117LFP4	2048	8	S	MCX	200n	200n	1.0 Ø	0.0	5	0.8	2.2§	2.1m	0.4		0	7	A561	FL91
67	MK4802P-55	2048	8	S	MNØ	55n	55n		0.0	5.0	.80	2.1						B457	
68	MB8128-10C#ai	2048	8	S	MNG	100n	100n	1.2 Ø	0.0	5.0	.80	2.2§	2.1m	.40		0	7	A489	DL24em
69	SYP2128L-1	2048	8	S	MNG	100n	100n	1.0 Ø	3.5	7.0	0.8	2.0§	3.2m	0.4		0	7	A581	DL24ad
70	TMS4016-15JDL	2048	8	S	MNG	150n	150n	475m	0.0	5.0	.80	2.0§	2.0m	.40		0	7	A489	ML207k
71	TMS4016-15JL	2048	8	S	MNG	150n	150n	475m	0.0	5.0	.80	2.0§	2.0m	.40		0	7	A489	DL24t
72	uPD4016C3	2048	8	S	MNG	150n	150n		0.0	5.0	.80	2.0	4.0m	.40		0	7	PN24n	DL24fj
73	uPD4016D3	2048	8	S	MNG	150n	150n		0.0	5.0	.80	2.0	4.0m	.40		0	7	PN24n	DL24fk
74	M58725S	2048	8	S	MNG	200n	200n	1.0	0.0	5.0	0.8	2.0§				0	6	A471	DLØ
75	MB8417XZ	2048	8	S	MNG	200n	140n$	55u♦	0.5	8.0	.80	2.2	4.0m	.40		4	8	A555a	DL24fz
76	TMS4016-20JDL	2048	8	S	MNG	200n	200n	475m	0.0	5.0	.80	2.0§	2.0m	.40		0	7	A489	ML207k
77	TMS4016-20JL	2048	8	S	MNG	200n	200n	475m	0.0	5.0	.80	2.0§	2.0m	.40		0	7	A489	DL24t
78	uPD4016C2	2048	8	S	MNG	200n	200n		0.0	5.0	.80	2.0	4.0m	.40		0	7	PN24n	DL24fj
79	uPD4016D2	2048	8	S	MNG	200n	200n		0.0	5.0	.80	2.0	4.0m	.40		0	7	PN24n	DL24fk
80	TMS4016-25JDL	2048	8	S	MNG	250n	250n	475m	0.0	5.0	.80	2.0§	2.0m	.40		0	7	A489	ML207K
81	TMS4016-25JL	2048	8	S	MNG	250n	250n	475m	0.0	5.0	.80	2.0§	2.0m	.40		0	7	A489	ML30K
82	uPD4016C1	2048	8	S	MNG	250n	250n		0.0	5.0	.80	2.0	4.0m	.40		0	7	PN24n	DL24fj
83	uPD4016D1	2048	8	S	MNG	250n	250n		0.0	5.0	.80	2.0	4.0m	.40		0	7	PN24n	DL24fk
84	TMS4016-45JDL	2048	8	S	MNG	450n	450n	475m	0.0	5.0	.80	2.0§	2.0m	.40		0	7	A489	ML207k
85	TMS4016-45JL	2048	8	S	MNG	450n	450n	475m	0.0	5.0	.80	2.0§	2.0m	.40		0	7	A489	DL24t
86	TMS4016-45NL	2048	8	S	MNG	450n	450n	475m	0.0	5.0	.80	2.0§	2.0m	.40		0	7	A489	DL24by
87	MK48D02J#ai	2048	8	S	MNX			1.0 Ø	0.0	5.0	0.8	2.2	4.0m	0.4		0	7	PN24mx	DL24ft
88	MK48D02N#ai	2048	8	S	MNX			1.0 Ø	0.0	5.0	0.8	2.2	4.0m	0.4		0	7	PN24mx	DL24an
89	MK48D02P#ai	2048	8	S	MNX			1.0 Ø	0.0	5.0	0.8	2.2	4.0m	0.4		0	7	PN24mx	DL24dd
90	TR1608	2048	8	S	MNX	75n	120n	200m		5.0	0.8	2.4	4.4m	0.4		0	7	A452	DL24b
91	SBB2016-1	2048	8	S	MNX	150n				5.0								A581	DL24Ø
92	SBB2016-2	2048	8	S	MNX	200n				5.0								A581	DL24Ø
93	S4028-2	2048	8	S	MXX	200n	200n	525m	0.0	5.0	.80	2.0§	8.0m	.40		0	7	A413	DLØ
94	S4028-3	2048	8	S	MXX	300n	300n	525m	0.0	5.0	.80	2.0§	8.0m	.40		0	7	A413	DLØ
95	25C15	2048	9	D	HNC	150n	275n	16	6.0	10	.80†	2.0	15m#	5.0	167kΔ	1	5		PL5
96	30C91	2048	9	D	HNC	220n	350n	16	6.0	10	.80†	2.0	15m#	5.0	167kΔ	1	5		PL5
97	15C10	2048	9	S	BTX	125n	150n	55	0.0	5.0	.80†	2.0	15m#	5.0		1	5		PL5
98	25C14	2048	16	D	HNC	150n	275n	23	6.0	10	.80†	2.0	15m#	5.0	167kΔ	1	5		PL5
99	30C83	2048	16	D	HNC	220n	350n	23	6.0	10	.80†	2.0	15m#	5.0	167kΔ	1	5		PL5
100	25C13	2048	18	D	HNC	150n	275n	26	6.0	10	.80†	2.0	15m#	5.0	167kΔ	1	5		PL5
101	30C89	2048	18	D	HNC	220n	350n	25	6.0	10	.80†	2.0	15m#	5.0	167kΔ	1	5		PL5
102	MK4147J-55	4000	1	S	MNG	55n	55n	500m	0.0	5.0	.80	2.0	50uΔ	4.5		0	7	PN18w	DL18bf
103	MK2141J-2	4000	1	S	MNG	120n	120n	1.0 Ø	0.0	5.0	.80	2.0Δ	10uΔ	5.0		0	7	PN18y	
104	MK2141N-2	4000	1	S	MNG	120n	120n	1.0 Ø	0.0	5.0	.80	2.0Δ	10uΔ	5.0		0	7	PN18y	
105	MK2141J-3	4000	1	S	MNG	150n	150n	1.0 Ø	0.0	5.0	.80	2.0Δ	10uΔ	5.0		0	7	PN18y	
106	MK2141N-3	4000	1	S	MNG	150n	150n	1.0 Ø	0.0	5.0	.80	2.0Δ	10uΔ	5.0		0	7	PN18y	
107	MEM-3	4000	8	S			500n	425m	0.0	5.0						0	7		
108	S6504C#ai	4094	1	S	MCG	300n			0.0	5.0								A506	DL18de
109	MK2147N-55	4096	1			55n	55n	900m	0.0	5.0	0.8	2.0				0	7		
110	S4017-3	4096	1			55n	55n	900m	0.0	5.0	.80	2.1	12m	.45		0	7		

SYMBOLS AND CODES EXPLAINED IN INTERPRETER

2. READ-WRITE MEMORIES (RAMS)

IN ORDER OF (1)No.WORDS(2)No.BITS/WORD (3)MODE(4)STRUCT.(5)MAX ACC.TIME(6)TYPE No.

LINE No.	6 TYPE NUMBER	ORGANIZATION 1 NO. OF WORDS	2 BITS PER WORD	3 MODE	4 STRUCTURE CODE	5 MAX. ACCESS TIME (S)	MAX. WRITE CYCLE TIME (S)	MAX. POWER DISS. (W)	POWER SUPPLY SPAN NEG. (V)	POS. (V)	INPUT LOGIC LEVELS MAX. '0' (V)	MIN. '1' (V)	MIN.OUTPUT SINK CURRENT (A)	@ OUT (V)	MIN. CLOCK FREQ. (Hz)	OPER TEMP RNGE CODE -	+	DRAWINGS FUNCTIONAL EQUIVALENT NUMBER	OUTLINE
1	S4017-4	4096	1			55n	55n	750m	0.0	5.0	.80	2.1	12m	.45		0	7		
2	MK2147N-70	4096	1			70n	70n	800m	0.0	5.0	0.8	2.0				0	7		
3	S4017-2	4096	1			70n	70n	800m	0.0	5.0	.80	2.1	12m	.45		0	7		
4	MK2147J-85	4096	1			85n	85n	800m	0.0	5.0	0.8	2.0				0	7		
5	MK2147N-85	4096	1			85n	85n	800m	0.0	5.0	0.8	2.0				0	7		
6	S4017-1	4096	1			90n	90n	800m	0.0	5.0	.80	2.1	12m	.45		0	7		
7	TMS21L47-7JDL	4096	1		MNG		70n△	770m	0.0	5.0	0.8	2.0				0	7		
8	TMS21L47-7JL	4096	1		MNG		70n△	770m	0.0	5.0	.80	2.0				0	7		
9	TMS2147-5JDL	4096	1		MNG		55n△	990m	0.0	5.0	0.8	2.0				0	7		
10	TMS2147-7JDL	4096	1		MNG		70n△	880m	0.0	5.0	0.8	2.0				0	7		
11	TMS2147-7JL	4096	1		MNG		70n△	880m	0.0	5.0	0.8	2.0				0	7		
12	TMS2147-9JDL	4096	1		MNG		90n△	990m	0.0	5.0	0.8	2.0				0	7		
13	TMS2147-9JL	4096	1		MNG		90n△	990m	0.0	5.0	0.8	2.0				0	7		
14	TMS2147-9NL	4096	1		MNG		90n△	990m	0.0	5.0	0.8	2.0				0	7		
15	TMS4164-10JDL	4096	1		MNG		200n△	250m	0.0	5.0	0.8	2.4				0	7		
16	MW4051DV2	4096	1		MNX	200n	400n	460m†	5.0	12	.60	2.4	3.2m	.40		0	7	PN18e	DL⊠
17	MW4051DV1	4096	1		MNX	250n	430n	460m†	5.0	12	.60	2.4	3.2m	.40		0	7	PN18e	DL⊠
18	MW4104DV2	4096	1		MNX	250n	400n	380m†	5.0	5.0	.60	2.4	3.2m	.40		0	7	PN16j	DL⊠
19	MW4051D	4096	1		MNX	300n	470n	460m†	5.0	12	.60	2.4	3.2m	.40		0	7	PN18e	DL⊠
20	MW4104DV1	4096	1		MNX	300n	430n	380m†	5.0	5.0	.60	2.4	3.2m	.40		0	7	PN16j	DL⊠
21	MW4104D	4096	1		MNX	350n	470n	380m†	5.0	5.0	.60	2.4	3.2m	.40		0	7	PN16j	DL⊠
22	MWS5004D	4096	1		MXS	175n		25m†	0.0	10	.80	7.0	3.5m	.50		2	8		DL⊠
23	HM4503	4096	1	D		400n	740n	482m	5.0	12	.80	3.0				0	7	A14a	ML8q
24	93481ADC	4096	1	D	BTX	100n	240n	500m†	0.0	5.0	.80	2.1§	16m	.50	500 △	0	7	A317	DL16f
25	93481AFC	4096	1	D	BTX	100n	240n	500m†	0.0	5.0	.80	2.1§	16m	.50	500 △	0	7	A317	FL14
26	93481APC	4096	1	D	BTX	100n	240n	500m†	0.0	5.0	.80	2.1§	16m	.50	500 △	0	7	A317	DL16dh
27	93481DC	4096	1	D	BTX	120n	280n	500m†	0.0	5.0	.80	2.1§	16m	.50	500 △	0	7	A317	DL16f
28	93481FC	4096	1	D	BTX	120n	280n	500m†	0.0	5.0	.80	2.1§	16m	.50	500 △	0	7	A317	FL14
29	93481PC	4096	1	D	BTX	120n	280n	500m†	0.0	5.0	.80	2.1§	16m	.50	500 △	0	7	A317	DL16dh
30	KM8680	4096	1	D	MCG	100n	200n△	350m	5	12		§							
31	MCM6604L2	4096	1	D	MNG			630m	5.0	12	0.8	2.4§				0	6	A494	DL16ex
32	MCM6604L4	4096	1	D	MNG			630m	5.0	12	0.8	2.4§				0	6	A494	DL16dt
33	MCM6604L	4096	1	D	MNG			630m	5.0	12	0.8	2.4§				0	6	A494	DL16dt
34	MCM6604P2	4096	1	D	MNG			630m	5.0	12	0.8	2.4§				0	6	A494	DL16dt
35	MCM6604P4	4096	1	D	MNG			630m	5.0	12	0.8	2.4§				0	6	A494	DL16ex
36	MCM6604P	4096	1	D	MNG			630m	5.0	12	0.8	2.4§				0	6	A494	DL16ex
37	HM4710	4096	1	D	MNG	100n	230n	600m	5.2	12	.60	2.4§	1.0m	.20		0	7	A313	ML77g
38	MB8215	4096	1	D	MNG	100n	200n	400m†	5.2	19	.60	2.4				0	7	A229	ML162
39	MB8215E	4096	1	D	MNG	100n	200n	645m♦	5.2	12	.60	2.4				0	7	A255	ML162
40	MCM4027AC1	4096	1	D	MNG	120n	320n	470m	5.0	12	.80	2.2§	3.2m	.40	500 △	0	7	A264	DL16bm
41	MCM4027AL1	4096	1	D	MNG	120n	320n	470m	5.0	12	.80	2.2§	3.2m	.40	500 △	0	7	A264	DL16ae
42	HM4711-1	4096	1	D	MNG	130n	270n	792m	5.0	12	.80	2.2§	3.2m	.45	500	0	7	A313a	ML77g
43	MM5271AD	4096	1	D	MNG	140n	260n	540m	5.0	12	.60	2.4§	2.0m	.45	500 △	0	7	A292b	DL18w
44	MM5271AJ	4096	1	D	MNG	140n	260n	540m	5.0	12	.60	2.4§	2.0m	.45	500 △	0	7	A292b	ML226b
45	MM5271AN	4096	1	D	MNG	140n	260n	540m	5.0	12	.60	2.4§	2.0m	.45	500 △	0	7	A292b	DL18p
46	4027-2F	4096	1	D	MNG	150n	320n	462m	5.0	12	.80	2.4§	3.2m	.40	500 △	0	7	A264a	DL16cv
47	4027-2I	4096	1	D	MNG	150n	320n	462m	5.0	12	.80	2.4§	3.2m	.40	500 △	0	7	A264a	DL16q
48	4027-2N	4096	1	D	MNG	150n	320n	462m	5.0	12	.80	2.4§	3.2m	.40	500 △	0	7	A264a	DL16fm
49	C2104A-1	4096	1	D	MNG	150n	320n	1.0 ⊠	5.0	12	.80	2.4§	3.2m	.40	500 △	0	7	A191a	DL16⊠
50	D2104A-1	4096	1	D	MNG	150n	320n	420m	5.0	12	.80	2.4§	3.2m	.40	500 △	0	7	A191a	DL16dq
51	D2107C-1	4096	1	D	MNG	150n	380n	420m	5.0	12	.80	2.4	3.2m	.40	500 △	0	7	A189a	DL22ai
52	HM4511-1	4096	1	D	MNG	150n	340n	400m†	5.0	12	.60	2.2§	3.2m	.40		0	7	A202	ML8
53	HM4704L-2	4096	1	D	MNG	150n	330n	462m	5.0	12	.80	2.4§	3.2m	.40	500 △	0	7	A391	DL16cd
54	HM4711-2	4096	1	D	MNG	150n	300n	792m	5.0	12	.80	2.2§	3.2m	.45	500	0	7	A313a	ML77g
55	IM7027P-2	4096	1	D	MNG	150n	325n	470m†	5.0	12	.80	2.2§	3.2m	.40	500 △	0	7	A324	DL16ab
56	IM7505A-1CJF	4096	1	D	MNG	150n	390n	335m†	5.0	12	.80	3.0§	2.0m	.45	500 △	0	7	PN22j	ML241
57	ITT4027-2D	4096	1	D	MNG	150n	330n△	1.0 ⊠	5.0	12	.80	2.2§	3.2m	.40	500 △	0	7	40-27	DL16cr
58	ITT4027-2J	4096	1	D	MNG	150n	330n△	1.0 ⊠	5.0	12	.80	2.2§	3.2m	.40	500 △	0	7	PN16j	DL16f
59	ITT4027-2N	4096	1	D	MNG	150n		1.0 ⊠	5.0	12	.80	2.2§	3.2m	.40	500 △	0	7	40-27	DL16dh
60	KMS4027	4096	1	D	MNG	150n	320n△	460m	5	12		§							
61	M4027P-2B1	4096	1	D	MNG	150n	320n	470m	5.0	12	.80	2.2§	3.2m	.40	500	0	7	40-27B	DL16dk
62	M4027P-2D1	4096	1	D	MNG	150n	320n	470m	5.0	12	.80	2.2§	3.2m	.40	500	0	7	40-27B	DL16ad
63	M4027P-2F1	4096	1	D	MNG	150n	320n	470m	5.0	12	.80	2.2§	3.2m	.40	500	0	7	40-27B	DL16dj
64	M58755S3	4096	1	D	MNG	150n	320n	540m	5.0	12	.60	2.4	2.0m	.45	500 △	0	7	A189	DL22ah
65	MB8107Y	4096	1	D	MNG	150n	350n	1.2 ⊠	5.0	12	.60	2.4§	2.2m	.45		0	7	A189	ML162
66	MB8227H	4096	1	D	MNG	150n	330n△	462m	5.0	12	.80	2.2§	3.2m	.40	500 △	0	7	A333	DL16g
67	MCM4027AL2	4096	1	D	MNG	150n	320n	470m	5.0	12	.80	2.2§	3.2m	.40	500 △	0	7	A264	DL16ae
68	MCM4027C2	4096	1	D	MNG	150n	330n△	470m	5.0	12	.80	2.2§	3.2m	.40	500 △	0	7	A264	DL16db
69	MCM4027L2	4096	1	D	MNG	150n	330n△	470m	5.0	12	.80	2.2§	3.2m	.40	500 △	0	7	A264	DL16o
70	MCM6605AL1	4096	1	D	MNG	150n	390n	437m	5.0	12	.80	3.0§	2.0m	.45	500 △	0	7	A148	DL22f
71	MCM6605AP1	4096	1	D	MNG	150n	390n	437m	5.0	12	.80	3.0§	2.0m	.45	500 △	0	7	A148	DL22aj
72	MK4027P-2△	4096	1	D	MNG	150n	320n	470m	5.0	12	.80	2.2§	3.2m	.40	500 △	0	7	A324	DL16cv
73	MM5270AD	4096	1	D	MNG	150n	280n	384m	5.0	12	.60	2.4§	2.0m	.45	500 △	0	7	A292a	DL18w
74	MM5270AJ	4096	1	D	MNG	150n	280n	384m	5.0	12	.60	2.4§	2.0m	.45	500 △	0	7	A292a	ML226b
75	MM5270AN	4096	1	D	MNG	150n	280n	384m	5.0	12	.60	2.4§	2.0m	.45	500 △	0	7	A292a	DL18p
76	MM5280AD	4096	1	D	MNG	150n	280n	540m	5.0	12	.60	2.4§	2.0m	.45	500 △	0	7	A293a	DL22j
77	MM5280AJ	4096	1	D	MNG	150n	280n	540m	5.0	12	.60	2.4§	2.0m	.45	500 △	0	7	A293a	DL22t
78	MM5280AN	4096	1	D	MNG	150n	280n	540m	5.0	12	.60	2.4§	2.0m	.45	500 △	0	7	A293a	DL22v
79	P2104A-1	4096	1	D	MNG	150n	320n	420m	5.0	12	.80	2.4§	3.2m	.40		0	7	A191a	DL16dr
80	P2107C-1	4096	1	D	MNG	150n	380n	420m	5.0	12	.80	2.4	3.2m	.40	500 △	0	7	A189a	DL22ao
81	TMS4027-15JDL	4096	1	D	MNG	150n	320n	460m	5.0	12	.80	2.2§	3.2m	.40	500	0	7	A326	DL16x
82	TMS4027-15JL	4096	1	D	MNG	150n	320n	460m	5.0	12	.80	2.4§	3.2m	.40	500 △	0	7	A326	ML127y
83	TMS4027-15NL	4096	1	D	MNG	150n	320n	460m	5.0	12	.80	2.4§	3.2m	.40	500 △	0	7	A326	DL16fb
84	TMS4060-3JL	4096	1	D	MNG	150n	470n	400m†	5.0	12	.60	2.2§	3.2m	.40	500 △	0	7	A202	ML8n
85	TMS4060-3NL	4096	1	D	MNG	150n	470n	400m†	5.0	12	.60	2.2§	3.2m	.40	500 △	0	7	A202	ML197a
86	S6606	4096	1	D	MNG	190n	530n△	409m†	5.0	12	.80	3.0	1.6m	.40	500 △	0	7	A144a	DL22g
87	2180D	4096	1	D	MNG	200n	400n	1.2	5.0	12	.80	2.4§	2.0m	.45	500 △	0	7	A189a	ML8t
88	2680F	4096	1	D	MNG	200n	400n	1.2 ⊠	5.0	12	.60	2.4	2.0m	.45	500 △	0	7	A189a	DL24cb
89	2680I	4096	1	D	MNG	200n	400n	1.2 ⊠	5.0	12	.60	2.4	2.0m	.45	500 △	0	7	A189a	ML204
90	2680N	4096	1	D	MNG	200n	400n	1.2 ⊠	5.0	12	.60	2.4	2.0m	.45	500 △	0	7	A189a	DL22am
91	4027-3F	4096	1	D	MNG	200n	375n	462m	5.0	12	.80	2.4§	3.2m	.40	500 △	0	7	A264a	DL16cv
92	4027-3I	4096	1	D	MNG	200n	375n	462m	5.0	12	.80	2.4§	3.2m	.40	500 △	0	7	A264a	DL16q
93	4027-3N	4096	1	D	MNG	200n	375n	462m	5.0	12	.80	2.4§	3.2m	.40	500 △	0	7	A264a	DL16fm
94	7270-11-6E	4096	1	D	MNG	200n	400n	480m†	5.0	12	.80	2.4§	2.0m	.45	500 △	0	7	A273	DL18ah
95	7280-11-6D	4096	1	D	MNG	200n	400n	480m†	5.0	12	.60	2.4	2.0m	.45	500 △	0	7	A272	ML241
96	AM9050EDC	4096	1	D	MNG	200n	400n	750m	5.0	12	.80	2.4	5.0m	.40		0	7	A483a	DL18y
97	AM9050EPC	4096	1	D	MNG	200n	400n	750m	5.0	12	.80	2.4	5.0m	.40		0	7	A483a	DL18⊠
98	AM9060EDC	4096	1	D	MNG	200n	400n	750m	5.0	12	.80	2.4	3.2m	.40		0	7	A483	DL22g
99	AM9060EPC	4096	1	D	MNG	200n	400n	750m	5.0	12	.80	2.4	3.2m	.40		0	7	A483	DL22w
100	B2107B	4096	1	D	MNG	200n	400n	1.2 ⊠	5.0	12	.60	2.4§	2.0m	.45	500 △	0	7	A189a	ML228
101	C2104A-2	4096	1	D	MNG	200n	320n	1.0 ⊠	5.0	12	.80	2.4§	3.2m	.40	500 △	0	7	A191a	DL16⊠
102	C2107B	4096	1	D	MNG	200n	400n	1.2 ⊠	5.0	12	.60	2.4	2.0m	.45	500 △	0	7	A189	DL22c
103	D2104A-2	4096	1	D	MNG	200n	320n	384m	5.0	12	.80	2.4§	3.2m	.40	500 △	0	7	A191a	DL16dq
104	D2107C-2	4096	1	D	MNG	200n	400n	396m	5.0	12	.80	2.4	3.2m	.40	500 △	0	7	A189a	DL22ai
105	EA4122DC2	4096	1	D	MNG	200n	400n	350m	5.0	12	.40%	2.4	3.2m	.40	500 △	0	7	A224	ML8p
106	EA4122PC2	4096	1	D	MNG	200n	400n	350m	5.0	12	.40%	2.4	3.2m	.40	500 △	0	7	A224	DL⊠
107	HM4511	4096	1	D	MNG	200n	400n	400m†	5.0	12	.60	2.2§	3.2m	.40		0	7	A202	ML8
108	HM4704-1	4096	1	D	MNG	200n	375n	594m	5.0	12	.80	2.4§	3.0m	.40	500	0	7	A191	DL16cd
109	HM4704L-3	4096	1	D	MNG	200n	420n	462m	5.0	12	.80	2.4§	3.2m	.40	500 △	0	7	A391	DL16cd
110	HM4711-3	4096	1	D	MNG	200n	360n	792m	5.0	12	.80	2.2§	3.2m	.45	500	0	7	A313a	ML77g

SYMBOLS AND CODES EXPLAINED IN INTERPRETER

2. READ-WRITE MEMORIES (RAMS)

IN ORDER OF (1)No.WORDS(2)No.BITS/WORD (3)MODE(4)STRUCT.(5)MAX ACC.TIME(6)TYPE No.

LINE No.	6 TYPE NUMBER	ORGANIZATION 1 NO. OF WORDS	2 BITS PER WORD	3 MODE	4 STRUCTURE CODE	5 MAX. ACCESS TIME (S)	MAX. WRITE CYCLE TIME (S)	MAX. POWER DISS. (W)	POWER SUPPLY SPAN NEG. (V)	POS. (V)	INPUT LOGIC LEVELS MAX. '0' (V)	MIN. '1' (V)	MIN.OUTPUT SINK CURRENT (A)	@ OUT (V)	MIN. CLOCK FREQ. (Hz)	OPER TEMP RNGE CODE -	+	DRAWINGS FUNCTIONAL EQUIVALENT NUMBER	OUTLINE
1	IM7027P-3	4096	1	D	MNG	200n	420n	470m†	5.0	12	.80	2.2§	3.2m	.40	500 △	0	7	A324	DL16ab
2	IM7270-11-6E	4096	1	D	MNG	200n	400n	480m†	5.0	12	.60	2.4	2.0m	.45	500 △	0	7	A273	DL18ah
3	IM7280-11-6D	4096	1	D	MNG	200n	400n	480m†	5.0	12	.60	2.4	2.0m	.45	500 △	0	7	A272	ML241
4	IM7505A-2CJF	4096	1	D	MNG	200n	490n	335m†	5.0	12	.80	3.0§	2.0m	.45	500 △	0	7	PN22j	ML241
5	IM7507-2	4096	1	D	MNG	200n	400n	350m♦	5.0	12	.60	2.2	2.0m	.45		0	7	A189	ML8f
6	ITT4027-3D	4096	1	D	MNG	200n	420n△	1.0 ⊘	5.0	12	.80	2.2§	3.2m	.40	500 △	0	7	40-27	DL16cr
7	ITT4027-3J	4096	1	D	MNG	200n	420n△	1.0 ⊘	5.0	12	.80	2.2§	3.2m	.40	500 △	0	7	PN16j	DL16f
8	ITT4027-3N	4096	1	D	MNG	200n		1.0 ⊘	5.0	12	.80	2.2§	3.2m	.40	500 △	0	7	40-27	DL16dh
9	M5L2107BP	4096	1	D	MNG	200n	400n	480m	5.0	12	.60	2.4	2.0m	.45	500 △	0	7	A189	DL14n
10	M5L2107BS	4096	1	D	MNG	200n	400n	480m	5.0	12	.60	2.4	2.0m	.45	500 △	0	7	A189	DL22ah
11	M4027P-3B1	4096	1	D	MNG	200n	375n	470m	5.0	12	.80	2.2§	3.2m	.40	500	0	7	40-27B	DL16dk
12	M4027P-3D1	4096	1	D	MNG	200n	375n	470m	5.0	12	.80	2.2§	3.2m	.40	500	0	7	40-27B	DL16ad
13	M4027P-3F1	4096	1	D	MNG	200n	375n	470m	5.0	12	.80	2.2§	3.2m	.40	500	0	7	40-27B	DL16dj
14	MB8105	4096	1	D	MNG	200n	400n	420m†	5.0	12	.60	2.4	5.0m	.40		0	7	A230	ML73
15	MB8107	4096	1	D	MNG	200n	400n	420m†	5.0	17	.60	2.4	2.2m	0.0		0	7	A230a	ML162
16	MB8107H	4096	1	D	MNG	200n	400n	1.2 ⊘	5.0	12	.60	2.4§	2.2m	.45		0	7	A189	ML162
17	MB8227E	4096	1	D	MNG	200n	420n△	462m	5.0	12	.80	2.2§	3.2m	.40	500 △	0	7	A333	DL16g
18	MCM4027AL3	4096	1	D	MNG	200n	375n	470m	5.0	12	.80	2.2§	3.2m	.40	500 △	0	7	A264	DL16ae
19	MCM4027C3	4096	1	D	MNG	200n	420n△	470m	5.0	12	.80	2.2§	3.2m	.40	500 △	0	7	A264	DL16db
20	MCM4027L3	4096	1	D	MNG	200n	420n△	470m	5.0	12	.80	2.2§	3.2m	.40	500 △	0	7	A264	DL16o
21	MCM4027P3	4096	1	D	MNG	200n	375n	470m†	5.0	12	.80	2.4§	3.2m	.40	500 △	0	7	A264	DL16o
22	MCM6605AL2	4096	1	D	MNG	200n	490n	437m	5.0	12	.80	3.0§	2.0m	.45	500 △	0	7	A148	DL22f
23	MCM6605AP2	4096	1	D	MNG	200n	490n	437m	5.0	12	.80	3.0§	2.0m	.45	500 △	0	7	A148	DL22aj
24	MK4027P-3△	4096	1	D	MNG	200n	375n	470m	5.0	12	.80	2.2§	3.2m	.40	500 △	0	7	A324	DL16cv
25	MM5270D	4096	1	D	MNG	200n	400n	420m†Ø	5.0	12	.60	2.4§	2.0m	.45	500 △	0	7	A292	DL18w
26	MM5280D	4096	1	D	MNG	200n	400n	420m†Ø	5.0	12	.60	2.4§	2.0m	.45	500 △	0	7	A293	DL22j
27	MN1001-2	4096	1	D	MNG	200n	400n	400m†	5.0	12	.60	2.2	3.2m	.40	500 △	0	7	A202	ML8n
28	MN1002P	4096	1	D	MNG	200n	400n	400m†	5.0	12	.60	2.2	3.2m	.40	500 △	0	6	A202	DL22y
29	MW4050DV2	4096	1	D	MNG	200n	400n	420m†	5.0	12	.60	2.2	5.0m	.40	500 △	0	7	A248	ML134d
30	MW4060DV2	4096	1	D	MNG	200n	400n	400m†	5.0	12	.60	2.2	3.2m	.40	500 △	0	7	A249	ML8s
31	P2104A-2	4096	1	D	MNG	200n	375n	384m	5.0	12	.80	2.4§	3.2m	.40		0	7	A191a	DL16dr
32	P2107B	4096	1	D	MNG	200n	400n	1.2 ⊘	5.0	12	.60	2.4	2.0m	.45	500 △	0	7	A189	DL22d
33	P2107C-2	4096	1	D	MNG	200n	400n	396m	5.0	12	.80	2.4	3.2m	.40	500 △	0	7	A189a	DL22ao
34	RM4096J3	4096	1	D	MNG	200n	350n△	400m†	5.0	12	.80	2.4	3.2m	.40	500 △	0	7	A191	ML1f
35	SYC4050-2	4096	1	D	MNG	200n	400n	457m	5.0	12	.60	2.2	5.0m	.40	500	0	7	A204	DL18w
36	SYP4050-2	4096	1	D	MNG	200n	400n	457m	5.0	12	.60	2.2	5.0m	.40	500	0	7	A204	DL18g
37	TMS4027-20JDL	4096	1	D	MNG	200n	375n	460m	5.0	12	.80	2.2§	3.2m	.40	500	0	7	A326	DL16x
38	TMS4027-20JL	4096	1	D	MNG	200n	375n	460m	5.0	12	.80	2.4§	3.2m	.40	500 △	0	7	A326	ML127y
39	TMS4027-20NL	4096	1	D	MNG	200n	375n	460m	5.0	12	.80	2.4§	3.2m	.40	500 △	0	7	A326	DL16fb
40	TMS4030-2JL	4096	1	D	MNG	200n	400n	400m†	3.0	12	.60	2.2§	3.2m	.40	500 △	0	7	A202	ML8n
41	TMS4030-2NL	4096	1	D	MNG	200n	400n	400m†	3.0	12	.60	2.2§	3.2m	.40	500 △	0	7	A202	ML197a
42	TMS4050-2JDL	4096	1	D	MNG	200n	400n	924m	5.0	12	.60	2.2	5.0m	.40	500 △	0	7	A204	DL18ag
43	TMS4050-2JL	4096	1	D	MNG	200n	400n	420m†	5.0	12	.60	2.2	5.0m	.40	500 △	0	7	A204	ML210
44	TMS4050-2NL	4096	1	D	MNG	200n	400n	420m†	5.0	12	.60	2.2	5.0m	.40	500 △	0	7	A204	DL18f
45	TMS4060-2JDL	4096	1	D	MNG	200n	400n	761m	5.0	12	.60	2.2§	3.2m	.40	500 △	0	7	A202	ML8n
46	TMS4060-2JL	4096	1	D	MNG	200n	400n	400m†	5.0	12	.60	2.2§	3.2m	.40	500 △	0	7	A202	ML77k
47	TMS4060-2NL	4096	1	D	MNG	200n	400n	400m†	5.0	12	.60	2.2§	3.2m	.40	500 △	0	7	A202	ML197b
48	MB8214	4096	1	D	MNG	230n	400n	500m†	5.0	17	.60	2.4				0	7	A228	ML149
49	MB8214H	4096	1	D	MNG	230n	370n	510m	5.0	12	.80	2.4§	2.0m	.40		0	7	A228	ML149
50	MB8224E	4096	1	D	MNG	230n	370n	470m	5.0	12	.80	2.4§	3.2m	.40		0	7	A278	DL16u
51	S6605	4096	1	D	MNG	230n	530n△	409m†	5.0	12	.80	3.0	1.6m	.40	500 △	0	7	A144	DL22g
52	2660-3F	4096	1	D	MNG	250n	375n	380m	5.0	12	.80	2.4§	2.0m	.40	500 △	0	7	A191	DL16cv
53	2660-3I	4096	1	D	MNG	250n	375n	380m	5.0	12	.80	2.4§	2.0m	.40	500 △	0	7	A191	DL16q
54	2660-3N	4096	1	D	MNG	250n	375n	380m	5.0	12	.80	2.4§	2.0m	.40	500 △	0	7	A191	DL16fm
55	2660F	4096	1	D	MNG	250n	375n	380m	5.0	12	.80	2.4§	2.0m	.40	500 △	0	7	A191	DL16cv
56	2660I	4096	1	D	MNG	250n	375n	380m	5.0	12	.80	2.4§	2.0m	.40	500 △	0	7	A191	DL16q
57	2660N	4096	1	D	MNG	250n	375n	380m	5.0	12	.80	2.4§	2.0m	.40	500 △	0	7	A191	DL16fm
58	4027-4F	4096	1	D	MNG	250n	375n	462m	5.0	12	.80	2.4§	3.2m	.40	500 △	0	7	A264a	DL16cv
59	4027-4I	4096	1	D	MNG	250n	375n	462m	5.0	12	.80	2.4§	3.2m	.40	500 △	0	7	A264a	DL16q
60	4027-4N	4096	1	D	MNG	250n	375n	462m	5.0	12	.80	2.4§	3.2m	.40	500 △	0	7	A264a	DL16fm
61	7005-11-6B	4096	1	D	MNG	250n	375n	24m♦	5.0	12	.80	2.4§	2.0m	.40	500 △	0	7	A191	ML1g
62	AM9050DDC	4096	1	D	MNG	250n	430n	750m	5.0	12	.80	2.4	5.0m	.40		0	7	A483a	DL18y
63	AM9050DPC	4096	1	D	MNG	250n	430n	750m	5.0	12	.80	2.4	5.0m	.40		0	7	A483a	DL18⊘
64	AM9060DDC	4096	1	D	MNG	250n	430n	750m	5.0	12	.80	2.4	3.2m	.40		0	7	A483	DL22g
65	AM9060DPC	4096	1	D	MNG	250n	430n	750m	5.0	12	.80	2.4	3.2m	.40		0	7	A483	DL22w
66	C2104-2	4096	1	D	MNG	250n	375n	1.2 ⊘	5.0	12	.60	2.4§	2.0m	.40		0	8	A191	DL16ek
67	C2104A-3	4096	1	D	MNG	250n	375n	1.0 ⊘	5.0	12	.80	2.4§	3.2m	.40	500 △	0	7	A191a	DL16⊘
68	D2104-2	4096	1	D	MNG	250n	375n	1.2 ⊘	5.0	12	.60	2.4§	2.0m	.40		0	8	A191	DL16dd
69	D2104A-3	4096	1	D	MNG	250n	375n	360m	5.0	12	.80	2.4§	3.2m	.40	500 △	0	7	A191a	DL16dq
70	D2107C	4096	1	D	MNG	250n	430n	360m	5.0	12	.80	2.4	3.2m	.40	500 △	0	7	A189a	DL22ai
71	EA4122DC1	4096	1	D	MNG	250n	430n	350m	5.0	12	.40%	2.4	3.2m	.40	500 △	0	7	A224	ML8p
72	EA4122PC1	4096	1	D	MNG	250n	430n	350m	5.0	12	.40%	2.4	3.2m	.40	500 △	0	7	A224	DL⊘
73	HM4704-2	4096	1	D	MNG	250n	425n	462m	5.0	12	.80	2.4§	3.0m	.40	500	0	7	A191	DL16cd
74	HM4704L-4	4096	1	D	MNG	250n	480n	462m	5.0	12	.80	2.4§	3.2m	.40	500 △	0	7	A391	DL16cd
75	IM7005-11-6B	4096	1	D	MNG	250n	375n	380m†	5.0	12	.80	2.4§	2.0m	.40	500 △	0	7	A191a	DL16ab
76	IM7027P-4	4096	1	D	MNG	250n	480n	470m†	5.0	12	.80	2.2§	3.2m	.40	500 △	0	7	A324	DL16ab
77	IM7507-1	4096	1	D	MNG	250n	430n	350m♦	5.0	12	.60	2.2	2.0m	.45		0	7	A189	ML8f
78	ITT4027-4D	4096	1	D	MNG	250n	480n△	1.0 ⊘	5.0	12	.80	2.2§	3.2m	.40	500 △	0	7	40-27	DL16cr
79	ITT4027-4J	4096	1	D	MNG	250n	480n△	1.0 ⊘	5.0	12	.80	2.2§	3.2m	.40	500 △	0	7	PN16j	DL16f
80	ITT4027-4N	4096	1	D	MNG	250n		1.0 ⊘	5.0	12	.80	2.2§	3.2m	.40	500 △	0	7	40-27	DL16dh
81	M4027P-4B1	4096	1	D	MNG	250n	375n	470m	5.0	12	.80	2.2§	3.2m	.40	500	0	7	40-27B	DL16dk
82	M4027P-4D1	4096	1	D	MNG	250n	375n	470m	5.0	12	.80	2.2§	3.2m	.40	500	0	7	40-27B	DL16ad
83	M4027P-4F1	4096	1	D	MNG	250n	375n	470m	5.0	12	.80	2.2§	3.2m	.40	500	0	7	40-27B	DL16dj
84	MB8107E	4096	1	D	MNG	250n	430n	1.2 ⊘	5.0	12	.60	2.4§	2.2m	.45		0	7	A189	ML162
85	MB8227N	4096	1	D	MNG	250n	75n$	462m	5.0	12	.80	2.2§	3.2m	.40	500 △	0	7	A333	DL16g
86	MCM4027AL4	4096	1	D	MNG	250n	375n	470m	5.0	12	.80	2.2§	3.2m	.40	500 △	0	7	A264	DL16ae
87	MCM4027C4	4096	1	D	MNG	250n	480n△	470m	5.0	12	.80	2.2§	3.2m	.40	500 △	0	7	A264	DL16db
88	MCM4027L4	4096	1	D	MNG	250n	480n△	470m	5.0	12	.80	2.2§	3.2m	.40	500 △	0	7	A264	DL16o
89	MCM4027P4	4096	1	D	MNG	250n	375n	470m†	5.0	12	.80	2.4§	3.2m	.40	500 △	0	7	A264	DL16o
90	MCM4096C6	4096	1	D	MNG	250n	375n	500m†	5.0	12	.80	2.4§	3.2m	.40	500 △	0	7	A264	DL16bm
91	MCM4096L6	4096	1	D	MNG	250n	375n	500m†	5.0	12	.80	2.4§	3.2m	.40	500 △	0	7	A264	DL16ai
92	MCM6604AC2	4096	1	D	MNG	250n	375n	500m†	5.0	12	.80	2.4§	2.0m	.40	500 △	0	7	A264	DL16bm
93	MCM6604AL2	4096	1	D	MNG	250n	375n	500m†	5.0	12	.80	2.4§	2.0m	.40	500 △	0	7	A264	DL16ai
94	MK4027P-4	4096	1	D	MNG	250n	375n	462m	5.0	12	.80	2.2§	3.2m	.40	500 △	0	7	A264	DL16ab
95	MK4027P-4△	4096	1	D	MNG	250n	375n	470m	5.0	12	.80	2.2§	3.2m	.40	500 △	0	7	A324	DL16cv
96	MM5271D	4096	1	D	MNG	250n	400n	420m†Ø	5.0	12	.60	2.4§	2.0m	.45	500 △	0	7	A292	DL18w
97	MM5281D	4096	1	D	MNG	250n	400n	420m†Ø	5.0	12	.60	2.4§	2.0m	.45	500 △	0	7	A293	DL22j
98	MN1001-1	4096	1	D	MNG	250n	430n	400m†	5.0	12	.60	2.2	3.2m	.40	500 △	0	7	A202	ML8n
99	MW4050DV1	4096	1	D	MNG	250n	430n	420m†	5.0	12	.60	2.2	5.0m	.40	500 △	0	7	A248	ML134d
100	MW4060DV1	4096	1	D	MNG	250n	430n	400m†	5.0	12	.60	2.2	3.2m	.40	500 △	0	7	A249	ML8s
101	P2104A-3	4096	1	D	MNG	250n	375n	360m	5.0	12	.80	2.4§	3.2m	.40		0	7	A191a	DL16dr
102	P2107C	4096	1	D	MNG	250n	430n	360m	5.0	12	.80	2.4	3.2m	.40	500 △	0	7	A189a	DL22ao
103	RM4096J6	4096	1	D	MNG	250n	375n△	400m†	5.0	12	.80	2.4	3.2m	.40	500 △	0	7	A191	ML1f
104	SYC4050-1	4096	1	D	MNG	250n	430n	457m	5.0	12	.60	2.2	5.0m	.40	500	0	7	A204	DL18w
105	SYP4050-1	4096	1	D	MNG	250n	430n	457m	5.0	12	.60	2.2	5.0m	.40	500	0	7	A204	DL18g
106	TMS4027-25JDL	4096	1	D	MNG	250n	375n	460m	5.0	12	.80	2.4§	3.2m	.40	500 △	0	7	A326	DL16x
107	TMS4027-25JL	4096	1	D	MNG	250n	375n	460m	5.0	12	.80	2.4§	3.2m	.40	500 △	0	7	A326	ML127y
108	TMS4027-25NL	4096	1	D	MNG	250n	375n	460m	5.0	12	.80	2.4§	3.2m	.40	500 △	0	7	A326	DL16fb
109	TMS4030-1JL	4096	1	D	MNG	250n	430n	400m†	3.0	12	.60	2.2§	3.2m	.40	500 △	0	7	A202	ML8n
110	TMS4030-1NL	4096	1	D	MNG	250n	430n	400m†	3.0	12	.60	2.2§	3.2m	.40	500 △	0	7	A202	ML197a

SYMBOLS AND CODES EXPLAINED IN INTERPRETER

2. READ-WRITE MEMORIES (RAMS)

IN ORDER OF (1)No.WORDS(2)No.BITS/WORD (3)MODE(4)STRUCT.(5)MAX ACC.TIME(6)TYPE No.

LINE No.	6 TYPE NUMBER	ORGANIZATION 1 NO. OF WORDS	2 BITS PER WORD	3 MODE	4 STRUCTURE CODE	5 MAX. ACCESS TIME (S)	MAX. WRITE CYCLE TIME (S)	MAX. POWER DISS. (W)	POWER SUPPLY SPAN NEG. (V)	POS. (V)	INPUT LOGIC LEVELS MAX. '0' (V)	MIN. '1' (V)	MIN.OUTPUT SINK CURRENT (A)	@ OUT (V)	MIN. CLOCK FREQ. (Hz)	OPER TEMP RNGE CODE -	+	DRAWINGS FUNCTIONAL EQUIVALENT NUMBER	OUTLINE
1	TMS4050-1JDL	4096	1	D	MNG	250n	430n	792m	5.0	12	.60	2.2	5.0m	.40	500 △	0	7	A204	DL18ag
2	TMS4050-1JL	4096	1	D	MNG	250n	430n	420m†	5.0	12	.60	2.2	5.0m	.40	500 △	0	7	A204	ML210
3	TMS4050-1NL	4096	1	D	MNG	250n	430n	420m†	5.0	12	.60	2.2	5.0m	.40	500 △	0	7	A204	DL18f
4	TMS4051-1JL	4096	1	D	MNG	250n	430n	460m†	5.0	12	.60	2.2	5.0m	.40		0	7	A204	ML210
5	TMS4051-1NL	4096	1	D	MNG	250n	430n	460m†	5.0	12	.60	2.2	5.0m	.40		0	7	A204	DL18b
6	TMS4060-1JDL	4096	1	D	MNG	250n	430n	761m	5.0	12	.60	2.2§	3.2m	.40	500 △	0	7	A202	ML8n
7	TMS4060-1JL	4096	1	D	MNG	250n	430n	400m†	5.0	12	.60	2.2§	3.2m	.40	500 △	0	7	A202	ML77k
8	TMS4060-1NL	4096	1	D	MNG	250n	430n	400m†	5.0	12	.60	2.2§	3.2m	.40	500 △	0	7	A202	ML197b
9	S6606A	4096	1	D	MNG	260n	600n△	409m†	5.0	12	.80	3.0	1.6m	.40	500 △	0	7	A144a	DL22g
10	2180-4D	4096	1	D	MNG	270n	470n	1.2 ⊘	5.0	12	.80	2.4§	2.0m	.45	500 △	0	7	A189a	ML8t
11	2680-1F	4096	1	D	MNG	270n	470n	1.2 ⊘	5.0	12	.60	2.4	2.0m	.45	500 △	0	7	A189a	DL24cb
12	2680-1I	4096	1	D	MNG	270n	470n	1.2 ⊘	5.0	12	.60	2.4	2.0m	.45	500 △	0	7	A189a	ML204
13	2680-1N	4096	1	D	MNG	270n	470n	1.2 ⊘	5.0	12	.60	2.4	2.0m	.45	500 △	0	7	A189a	DL22am
14	7270-12-6E	4096	1	D	MNG	270n	470n	480m†	5.0	12	.80	2.4§	2.0m	.45	500 △	0	7	A273	DL18ah
15	7280-12-6D	4096	1	D	MNG	270n	470n	480m†	5.0	12	.60	2.4	2.0m	.45	500 △	0	7	A272	ML241
16	B2107B4	4096	1	D	MNG	270n	470n	1.2 ⊘	5.0	12	.60	2.4§	2.0m	.45	500 △	0	7	A189a	ML228
17	B2107B-4	4096	1	D	MNG	270n	470n	1.2 ⊘	5.0	12	.60	2.4§	2.0m	.45	1.0k△	0	7	A189a	ML228
18	C2107B4	4096	1	D	MNG	270n	470n	1.2 ⊘	5.0	12	.60	2.4	2.0m	.45	500 △	0	7	A189	DL22c
19	IM7270-12-6E	4096	1	D	MNG	270n	470n	480m†	5.0	12	.60	2.4	2.0m	.45	500 △	0	7	A273	DL18ah
20	IM7280-12-6D	4096	1	D	MNG	270n	470n	480m†	5.0	12	.60	2.4	2.0m	.45	500 △	0	7	A272	ML241
21	M5L2107BS-4	4096	1	D	MNG	270n	470n	420m	5.0	12	.60	2.4	2.0m	.45	500 △	0	7	A189	DL22ah
22	MM4270D	4096	1	D	MNG	270n	470n	840mØ	5.0	12	.60	2.2	2.0m	.45	1.0k△	5	8	A292	DL18w
23	MM5270D5	4096	1	D	MNG	270n	470n	420m†Ø	5.0	12	.60	2.4§	2.0m	.45	500 △	0	7	A292	DL18w
24	MM5280D5	4096	1	D	MNG	270n	470n	420m†Ø	5.0	12	.60	2.4§	2.0m	.45	500 △	0	7	A293	DL22j
25	MM5280D-055	4096	1	D	MNG	270n	470n	1.2 ⊘	5.0	12	.60	2.4	2.0m	.45	1.0k△	0	5	A293	DL22j
26	MM5280J-055	4096	1	D	MNG	270n	470n	1.2 ⊘	5.0	12	.60	2.4	2.0m	.45	1.0k△	0	5	A293	
27	MM5280N-055	4096	1	D	MNG	270n	470n	1.2 ⊘	5.0	12	.60	2.4	2.0m	.45	1.0k△	0	5	A293	
28	P2107B4	4096	1	D	MNG	270n	470n	1.2 ⊘	5.0	12	.60	2.4	2.0m	.45	500 △	0	7	A189	DL22d
29	HM4517-1	4096	1	D	MNG	275n	510n	505m	5.0	12	.60	3.0§	50mØ			0	7	A234	ML8q
30	B2107A1	4096	1	D	MNG	280n	550n	1.0 ⊘	5.0	12	.80	3.5§	1.7m	.45	1.0k△	0	7	A189a	DL22aa
31	C2107A1	4096	1	D	MNG	280n	550n	1.0 ⊘	5.0	12	.80	3.5	1.7m	.45	1.0k△	0	7	A189	DL22c
32	MB8214E	4096	1	D	MNG	280n	425n	510m	5.0	12	.80	2.4§	2.0m	.40		0	7	A228	ML149
33	MB8224N	4096	1	D	MNG	280n	450n	470m	5.0	12	.80	2.4§	3.2m	.40		0	7	A278	DL16u
34	P2107A1	4096	1	D	MNG	280n	550n	1.0 ⊘	5.0	12	.80	3.5	1.7m	.45	1.0k△	0	7	A189	DL22d
35	2604	4096	1	D	MNG	300n	470n		5.0	12	.60	2.2§	3.2m	.40	500 △	0	7	A208	ML204
36	2604A	4096	1	D	MNG	300n	470n		3.0	12	.60	2.2§	3.2m	.40	500 △	0	7	A208	ML204
37	2660-1F	4096	1	D	MNG	300n	425n	380m	5.0	12	.80	2.4§	2.0m	.40	500 △	0	7	A191	DL16cv
38	2660-1I	4096	1	D	MNG	300n	425n	380m	5.0	12	.80	2.4§	2.0m	.40	500 △	0	7	A191	DL16q
39	2660-1N	4096	1	D	MNG	300n	425n	380m	5.0	12	.80	2.4§	2.0m	.40	500 △	0	7	A191	DL16fm
40	7005-12-6B	4096	1	D	MNG	300n	425n	24m♦	5.0	12	.80	2.4§	2.0m	.40	500 △	0	7	A191	ML1g
41	AM9050CDC	4096	1	D	MNG	300n	470n	750m	5.0	12	.80	2.4	5.0m	.40		0	7	A483a	DL18y
42	AM9050CPC	4096	1	D	MNG	300n	470n	750m	5.0	12	.80	2.4	5.0m	.40		0	7	A483a	DL18⊘
43	AM9060CDC	4096	1	D	MNG	300n	470n	750m	5.0	12	.80	2.4	3.2m	.40		0	7	A483	DL22g
44	AM9060CPC	4096	1	D	MNG	300n	470n	750m	5.0	12	.80	2.4	3.2m	.40		0	7	A483	DL22w
45	B2107A	4096	1	D	MNG	300n	700n	1.0 ⊘	5.0	12	.80	3.5§	1.7m	.45	500 △	0	7	A189a	DL22aa
46	B2107B-5	4096	1	D	MNG	300n	590n	1.2 ⊘	5.0	12	.60	2.4§	2.0m	.45	1.0k△	0	7	A189a	ML228
47	C2104-4	4096	1	D	MNG	300n	425n	1.2 ⊘	5.0	12	.60	2.4§	2.0m	.40		0	8	A191	DL16ek
48	C2104A-4	4096	1	D	MNG	300n	425n	1.0 ⊘	5.0	12	.80	2.4§	3.2m	.40	500 △	0	7	A191a	DL16⊘
49	C2107A	4096	1	D	MNG	300n	700n	1.0 ⊘	5.0	12	.80	3.5	1.7m	.45	500 △	0	7	A189	DL22c
50	D2104-4	4096	1	D	MNG	300n	425n	1.2 ⊘	5.0	12	.60	2.4§	2.0m	.40		0	8	A191	DL16dd
51	D2104A-4	4096	1	D	MNG	300n	425n	360m	5.0	12	.80	2.4§	3.2m	.40	500 △	0	7	A191a	DL16dq
52	D2107C-4	4096	1	D	MNG	300n	470n	360m	5.0	12	.80	2.4	3.2m	.40	500 △	0	7	A189a	DL22ai
53	EA4122DC	4096	1	D	MNG	300n	470n	350m	5.0	12	.40%	2.4	3.2m	.40	500 △	0	7	A224	ML8p
54	EA4122PC	4096	1	D	MNG	300n	470n	350m	5.0	12	.40%	2.4	3.2m	.40	500 △	0	7	A224	DL⊘
55	HM4507	4096	1	D	MNG	300n	550n	793m	5.0	12	.60	3.0§	50mØ			0	7	A234	ML8q
56	HM4517	4096	1	D	MNG	300n	550n	505m	5.0	12	.60	3.0§	50mØ			0	7	A234	ML8q
57	HYB4060	4096	1	D	MNG	300n	470n	380m†	5.0	12	.60	2.4§	3.2m	.40	500	0	7	A189	ML8b
58	IM7005-12-6B	4096	1	D	MNG	300n	425n	380m†	5.0	12	.80	2.4§	2.0m	.40	500 △	0	7	A191a	DL16ab
59	IM7505ACJF	4096	1	D	MNG	300n	590n	335m†	5.0	12	.80	3.0§	2.0m	.45	500 △	0	7	PN22j	ML241
60	IM7507	4096	1	D	MNG	300n	470n	350m♦	5.0	12	.60	2.2	2.0m	.45		0	7	A189	ML8f
61	M5L2104S	4096	1	D	MNG	300n	425n	672m	5.0	12	.60	2.4§	2.0m	.40	500 △	0	7	A191a	DL16ag
62	M58755S	4096	1	D	MNG	300n	550n	420m	5.0	12	.60	3.5	2.0m	.45	500	0	7	A189	ML8b
63	M58756K	4096	1	D	MNG	300n	425n	672m	5.0	12	.60	2.4§	2.0m	.40	500 △	0	7	A191a	ML335
64	MB8107N	4096	1	D	MNG	300n	470n	1.2 ⊘	5.0	12	.60	2.4§	2.2m	.45		0	7	A189	ML162
65	MCM4096C16	4096	1	D	MNG	300n	425n	500m†	5.0	12	.80	2.4§	3.2m	.40	500 △	0	7	A264	DL16bm
66	MCM4096L16	4096	1	D	MNG	300n	425n	500m†	5.0	12	.80	2.4§	3.2m	.40	500 △	0	7	A264	DL16ai
67	MCM6604AC4	4096	1	D	MNG	300n	425n	500m†	5.0	12	.80	2.4§	2.0m	.40	500 △	0	7	A264	DL16bm
68	MCM6604AL4	4096	1	D	MNG	300n	425n	500m†	5.0	12	.80	2.4§	2.0m	.40	500 △	0	7	A264	DL16ai
69	MCM6605AL	4096	1	D	MNG	300n	590n	437m	5.0	12	.80	3.0§	2.0m	.45	500 △	0	7	A148	DL22f
70	MCM6605AP	4096	1	D	MNG	300n	590n	437m	5.0	12	.80	3.0§	2.0m	.45	500 △	0	7	A148	DL22aj
71	MN1001	4096	1	D	MNG	300n	470n	400m†	5.0	12	.60	2.2	3.2m	.40	500 △	0	7	A202	ML8n
72	MW4050D	4096	1	D	MNG	300n	470n	420m†	5.0	12	.60	2.2	5.0m	.40	500 △	0	7	A248	ML134d
73	MW4060D	4096	1	D	MNG	300n	470n	400m†	5.0	12	.60	2.2	3.2m	.40	500 △	0	7	A249	ML8s
74	P2104A-4	4096	1	D	MNG	300n	425n	360m	5.0	12	.80	2.4§	3.2m	.40		0	7	A191a	DL16dr
75	P2107A	4096	1	D	MNG	300n	700n	1.0 ⊘	5.0	12	.80	3.5	1.7m	.45	500 △	0	7	A189	DL22d
76	P2107C-4	4096	1	D	MNG	300n	470n	360m	5.0	12	.80	2.4	3.2m	.40	500 △	0	7	A189a	DL22ao
77	RM1701G	4096	1	D	MNG	300n	470n	400m	5.0	12	.60	2.2§	3.2m	.40	500 △	0	6	A160	ML8m
78	RM1701H	4096	1	D	MNG	300n	470n	400m	5.0	12	.60	2.2§	3.2m	.40	500 △	0	6	A160	ML8k
79	RM4096J16	4096	1	D	MNG	300n	425n△	400m†	5.0	12	.80	2.4	3.2m	.40	500 △	0	7	A191	ML1f
80	S6605A	4096	1	D	MNG	300n	600n△	409m†	5.0	12	.80	3.0	1.6m	.40	500 △	0	7	A144	DL22g
81	SMC4030JR	4096	1	D	MNG	300n	470n	965m	3.0	12	.40%	2.4	3.2m	.40	1.0k△	5	8	A202	ML8n
82	SMC4050JR	4096	1	D	MNG	300n	470n	965m	5.0	12	.40%	2.4	5.0m	.40	1.0k△	5	8	A204	ML210
83	SMC4060JR	4096	1	D	MNG	300n	470n	960m	5.0	12	.40%	2.4	3.2m	.40	1.0k△	5	8	A202	ML8n
84	SYC4050	4096	1	D	MNG	300n	470n	457m	5.0	12	.60	2.2	5.0m	.40	500	0	7	A204	DL18w
85	SYP4050	4096	1	D	MNG	300n	470n	457m	5.0	12	.60	2.2	5.0m	.40	500	0	7	A204	DL18g
86	TMS4030JL	4096	1	D	MNG	300n	470n	400m†	3.0	12	.60	2.2§	3.2m	.40	500 △	0	7	A202	ML8n
87	TMS4030NL	4096	1	D	MNG	300n	470n	400m†	3.0	12	.60	2.2§	3.2m	.40	500 △	0	7	A202	ML197a
88	TMS4050JDL	4096	1	D	MNG	300n	470n	792m	5.0	12	.60	2.2	5.0m	.40	500 △	0	7	A204	DL18ag
89	TMS4050JL	4096	1	D	MNG	300n	470n	420m†	5.0	12	.60	2.2	5.0m	.40	500 △	0	7	A204	ML210
90	TMS4050NL	4096	1	D	MNG	300n	470n	420m†	5.0	12	.60	2.2	5.0m	.40	500 △	0	7	A204	DL18f
91	TMS4051JL	4096	1	D	MNG	300n	470n	460m†	5.0	12	.60	2.2	5.0m	.40		0	7	A204	ML210
92	TMS4051NL	4096	1	D	MNG	300n	470n	460m†	5.0	12	.60	2.2	5.0m	.40		0	7	A204	DL18b
93	TMS4060JDL	4096	1	D	MNG	300n	470n	761m	5.0	12	.60	2.2§	3.2m	.40	500 △	0	7	A202	ML8n
94	TMS4060JL	4096	1	D	MNG	300n	470n	400m†	5.0	12	.60	2.2§	3.2m	.40	500 △	0	7	A202	ML77k
95	TMS4060NL	4096	1	D	MNG	300n	470n	400m†	5.0	12	.60	2.2§	3.2m	.40	500 △	0	7	A202	ML197b
96	MB8214N	4096	1	D	MNG	330n	500n	510m	5.0	12	.80	2.4§	2.0m	.40		0	7	A228	ML149
97	2660-2F	4096	1	D	MNG	350n	500n	380m	5.0	12	.80	2.4§	2.0m	.40	500 △	0	7	A191	DL16cv
98	2660-2I	4096	1	D	MNG	350n	500n	380m	5.0	12	.80	2.4§	2.0m	.40	500 △	0	7	A191	DL16q
99	2660-2N	4096	1	D	MNG	350n	500n	380m	5.0	12	.80	2.4§	2.0m	.40	500 △	0	7	A191	DL16fm
100	2680-2F	4096	1	D	MNG	350n	800n	1.2 ⊘	5.0	12	.60	2.4	2.0m	.45	1.0k△	0	7	A189a	DL24cb
101	2680-2I	4096	1	D	MNG	350n	800n	1.2 ⊘	5.0	12	.60	2.4	2.0m	.45	1.0k△	0	7	A189a	ML204
102	2680-2N	4096	1	D	MNG	350n	800n	1.2 ⊘	5.0	12	.60	2.4	2.0m	.45	1.0k△	0	7	A189a	DL22am
103	7280-14-6D	4096	1	D	MNG	350n	800n	480m†	5.0	12	.80	3.5	2.0m	.45	1.0k△	0	7	A272	ML241
104	B2107A4	4096	1	D	MNG	350n	840n	1.0 ⊘	5.0	12	.80	3.5§	1.7m	.45	500 △	0	7	A189a	DL22aa
105	B2107B6	4096	1	D	MNG	350n	800n	1.2 ⊘	5.0	12	.60	2.4§	2.0m	.45	1.0k△	0	7	A189a	ML228
106	C2104	4096	1	D	MNG	350n	500n	1.2 ⊘	5.0	12	.60	2.4§	2.0m	.40		0	8	A191	DL16ek
107	C2104A	4096	1	D	MNG	350n	500n	422m	5.0	12	.80	2.4	2.0m	.40	500 △	0	7	A191a	ML1n
108	C2107A4	4096	1	D	MNG	350n	840n	1.0 ⊘	5.0	12	.80	3.5	1.7m	.45	500 △	0	7	A189	DL22c
109	C2107B6	4096	1	D	MNG	350n	800n	1.2 ⊘	5.0	12	.60	3.5	2.0m	.45	1.0k△	0	7	A189	DL22c
110	D2104	4096	1	D	MNG	350n	500n	1.2 ⊘	5.0	12	.60	2.4§	2.0m	.40		0	8	A191	DL16dd

SYMBOLS AND CODES EXPLAINED IN INTERPRETER

2. READ-WRITE MEMORIES (RAMS)

IN ORDER OF (1)No.WORDS(2)No.BITS/WORD (3)MODE(4)STRUCT.(5)MAX ACC.TIME(6)TYPE No.

LINE No.	6 TYPE NUMBER	ORGANIZATION 1 NO. OF WORDS	2 BITS PER WORD	3 MODE	4 STRUCTURE CODE	5 MAX. ACCESS TIME (S)	MAX. WRITE CYCLE TIME (S)	MAX. POWER DISS. (W)	POWER SUPPLY SPAN NEG. (V)	POWER SUPPLY SPAN POS. (V)	INPUT LOGIC LEVELS MAX. '0' (V)	INPUT LOGIC LEVELS MIN. '1' (V)	MIN.OUTPUT SINK CURRENT (A)	MIN.OUTPUT SINK CURRENT @ OUT (V)	MIN. CLOCK FREQ. (Hz)	OPER TEMP RNGE CODE -	OPER TEMP RNGE CODE +	DRAWINGS FUNCTIONAL EQUIVALENT NUMBER	DRAWINGS OUTLINE
1	D2104A	4096	1	D	MNG	350n	500n	420m	5.0	12	.80	2.4	2.0m	.40	500	0	7	A191a	DL22ai
2	HM4704L-6	4096	1	D	MNG	350n	500n	528m	5.0	12	.80	2.7§	3.2m	.40	1.0kΔ	0	7	A391	DL16cd
3	HYB4060A	4096	1	D	MNG	350n	600n	380m†	5.0	12	.60	3.0§	3.2m	.40	500	0	7	A189	ML8b
4	IM7280-14-6D	4096	1	D	MNG	350n	800n	480m†	5.0	12	.60	3.5	2.0m	.45	500 Δ	0	7	A272	ML241
5	ITT4027-6	4096	1	D	MNG	350n	500n	1.0 Ø	5.0	12	.80	2.2§	3.2m	.40	500 Δ	0	7	PN16j	DLØ
6	ITT4027-6D	4096	1	D	MNG	350n	700nΔ	1.0 Ø	5.0	12	.80	2.2§	3.2m	.40	500 Δ	0	7	40-27	DL16cr
7	ITT4027-6J	4096	1	D	MNG	350n	700nΔ	1.0 Ø	5.0	12	.80	2.2§	3.2m	.40	500 Δ	0	7	PN16j	DL16f
8	ITT4027-6N	4096	1	D	MNG	350n		1.0 Ø	5.0	12	.80	2.2§	3.2m	.40	500 Δ	0	7	40-27	DL16dh
9	MCM4096C11	4096	1	D	MNG	350n	500n	500m†	5.0	12	.80	2.4§	3.2m	.40	500 Δ	0	7	A264	DL16bm
10	MCM4096L11	4096	1	D	MNG	350n	500n	500m†	5.0	12	.80	2.4§	3.2m	.40	500 Δ	0	7	A264	DL16ai
11	MCM6604AC	4096	1	D	MNG	350n	500n	500m†	5.0	12	.80	2.4§	2.0m	.40	500 Δ	0	7	A264	DL16bm
12	MCM6604AL	4096	1	D	MNG	350n	500n	500m†	5.0	12	.80	2.4§	2.0m	.40	500 Δ	0	7	A264	DL16ai
13	P2104A	4096	1	D	MNG	350n	500n	420m	5.0	12	.80	2.4	2.0m	.40	500 Δ	0	7	A191a	DL16dr
14	P2107A4	4096	1	D	MNG	350n	840n	1.0 Ø	5.0	12	.80	3.5	1.7m	.45	500 Δ	0	7	A189	DL22d
15	P2107B6	4096	1	D	MNG	350n	800n	1.2 Ø	5.0	12	.60	3.5	2.0m	.45	1.0kΔ	0	7	A189	DL22d
16	RM4096J11	4096	1	D	MNG	350n	500nΔ	400m†	5.0	12	.80	2.4	3.2m	.40	500 Δ	0	7	A191	ML1f
17	MF7112	4096	1	D	MNG	390n	560n	350m	2.0	12	.80	3.2	1.0m	.40		0	7	A119	ML8
18	B2107A5	4096	1	D	MNG	420n	970n	1.0 Ø	5.0	12	.80	3.5§	1.7m	.45	500 Δ	0	7	A189a	DL22aa
19	C2107A5	4096	1	D	MNG	420n	970n	1.0 Ø	5.0	12	.80	3.5	1.7m	.45	500 Δ	0	7	A189	DL22c
20	C2107A8	4096	1	D	MNG	420n	970n	1.0 Ø	5.0	12	.80	3.5	1.7m	.45	500 Δ	0	5	A189	DL22c
21	P2107A5	4096	1	D	MNG	420n	970n	1.0 Ø	5.0	12	.80	3.5	1.7m	.45	500 Δ	0	7	A189	DL22d
22	P2107A8	4096	1	D	MNG	420n	970n	1.0 Ø	5.0	12	.80	3.5	1.7m	.45	500 Δ	0	5	A189	DL22d
23	S6605B	4096	1	D	MNG	600n	900nΔ	409m†	5.0	12	.80	3.0	1.6m	.40	500 Δ	0	7	A144	DL22g
24	uPD411AD4	4096	1	D	MNX	135n	320n	1.0 Ø	5.0	12	.60	2.4§	3.2m	.40	500 Δ	0	7	A221	ML77f
25	uPD411AD3	4096	1	D	MNX	150n	380n	1.0 Ø	5.0	12	.60	2.4§	3.2m	.40	500 Δ	0	7	A221	ML77f
26	uPD411D3	4096	1	D	MNX	150n	380n	1.0 Ø	5.0	12	.60	2.4§	3.2m	.40	500	0	7	A221	ML8j
27	uPD418C3	4096	1	D	MNX	150n	380n	384m	5.0	12	.60	2.2	5.0m	.40	500 Δ	0	7	A310	DL18c
28	uPD418C-3	4096	1	D	MNX	150n	380n	402m	5.0	12	.60	2.2	5.0m	.40	500 Δ	0	7	A446	ML244
29	uPD418D3	4096	1	D	MNX	150n	380n	384m	5.0	12	.60	2.2	5.0m	.40	500 Δ	0	7	A310	ML194a
30	uPD418D-3	4096	1	D	MNX	150n	380n	402m	5.0	12	.60	2.2	5.0m	.40	500 Δ	0	7	A446	DL18bb
31	uPD418C2	4096	1	D	MNX	180n	400n	350m	5.0	12	.60	2.2	5.0m	.40	500 Δ	0	7	A310	DL18c
32	uPD418D2	4096	1	D	MNX	180n	400n	350m	5.0	12	.60	2.2	5.0m	.40	500 Δ	0	7	A310	ML194a
33	MSM3743A	4096	1	D	MNX	200n	400n	3.0m♦	5.0	12	.60	2.4§	2.0m	.45	500 Δ	0	7	A349	DL22a
34	uPD411AC2	4096	1	D	MNX	200n	400n	660m	5.0	12	.60	2.4§	3.2m	.40	500 Δ	0	7	A444	DL22ab
35	uPD411AD2	4096	1	D	MNX	200n	400n	660m	5.0	12	.60	2.4§	3.2m	.40	500 Δ	0	7	A444	ML77f
36	uPD411D2	4096	1	D	MNX	200n	400n	1.0 Ø	5.0	12	.60	2.4§	3.2m	.40	500	0	7	A221	ML8j
37	uPD411D2M	4096	1	D	MNX	200n	400n	1.0 Ø	5.0	12	.60	2.6§	3.2m	.40	500 Δ	4	8	A444	ML77a
38	uPD414C2	4096	1	D	MNX	200n	375n	420m†	5.0	12	.80	2.4§	2.0m	.40	500 Δ	0	7	A309	ML89f
39	uPD414D2	4096	1	D	MNX	200n	375n	420m†	5.0	12	.80	2.4§	2.0m	.40	500 Δ	0	7	A309	ML127w
40	uPD418C-2	4096	1	D	MNX	200n	400n	350m	5.0	12	.60	2.2	5.0m	.40	500 Δ	0	7	A446	ML244
41	uPD418D-2	4096	1	D	MNX	200n	400n	350m	5.0	12	.60	2.2	5.0m	.40	500 Δ	0	7	A446	DL18bb
42	MK4096K-6	4096	1	D	MNX	250n	375n	450m	5.0	12	.80	2.4§	2.0m	.40	500 Δ	0	7	A191	DL16ab
43	MK4096N-6	4096	1	D	MNX	250n	375n	1.0 Ø	5.0	12	.80	2.4§	10uΔ	0.0	500 Δ	0	7	A191	DL16am
44	MK4096P-6	4096	1	D	MNX	250n	375n	1.0 Ø	5.0	12	.80	2.4§	10uΔ	0.0	500 Δ	0	7	A191	DL16ab
45	uPD411AC1	4096	1	D	MNX	250n	430n	660m	5.0	12	.60	2.4§	3.2m	.40	500 Δ	0	7	A444	DL22ab
46	uPD411AD1	4096	1	D	MNX	250n	430n	660m	5.0	12	.60	2.4§	3.2m	.40	500 Δ	0	7	A444	ML77f
47	uPD411D1	4096	1	D	MNX	250n	470n	1.0 Ø	5.0	12	.60	2.4§	3.2m	.40	500	0	7	A221	ML8j
48	uPD411D1M	4096	1	D	MNX	250n	430n	1.0 Ø	5.0	12	.60	2.6§	3.2m	.40	500 Δ	4	8	A444	ML77a
49	uPD414AC-1	4096	1	D	MNX	250n	375n	462m	5.0	12	.80	2.4	3.2m	.40		0	7	A191	DL16fd
50	uPD414AD-1	4096	1	D	MNX	250n	375n	462m	5.0	12	.80	2.4	3.2m	.40		0	7	A191	DL16es
51	uPD414C1	4096	1	D	MNX	250n	375n	420m†	5.0	12	.80	2.4§	2.0m	.40	500 Δ	0	7	A309	ML89f
52	uPD414D1	4096	1	D	MNX	250n	375n	420m†	5.0	12	.80	2.4§	2.0m	.40	500 Δ	0	7	A309	ML127w
53	uPD418C1	4096	1	D	MNX	250n	430n	350m	5.0	12	.60	2.2	5.0m	.40	500 Δ	0	7	A310	DL18c
54	uPD418C-1	4096	1	D	MNX	250n	430n	350m	5.0	12	.60	2.2	5.0m	.40	500 Δ	0	7	A446	ML244
55	uPD418D1	4096	1	D	MNX	250n	430n	350m	5.0	12	.60	2.2	5.0m	.40	500 Δ	0	7	A310	ML194a
56	uPD418D-1	4096	1	D	MNX	250n	430n	350m	5.0	12	.60	2.2	5.0m	.40	500 Δ	0	7	A446	DL18bb
57	MK4096K-16	4096	1	D	MNX	300n	425n	385m	5.0	12	.80	2.4§	2.0m	.40	500 Δ	0	7	A191	DL16ab
58	MK4096N-16	4096	1	D	MNX	300n	425n	1.0 Ø	5.0	12	.80	2.4§	10uΔ	0.0	500 Δ	0	7	A191	DL16am
59	MK4096P7	4096	1	D	MNX	300n	165n	360m♦	9.0	12	.80	2.4§	2.0m	.40	500 Δ	0	7	A191	ML140c
60	MK4096P-16	4096	1	D	MNX	300n	425n	1.0 Ø	5.0	12	.80	2.4§	10uΔ	0.0	500 Δ	0	7	A191	DL16ab
61	MK4200K-16	4096	1	D	MNX	300n	425n	380m	5.0	12	.80	2.4§	10uΔ	0.0	500 Δ	0	7	A191	DL16ab
62	MK4200N-16	4096	1	D	MNX	300n	425n	380m	5.0	12	.80	2.4§	10uΔ	0.0	500 Δ	0	7	A191	DL16am
63	MK4200P-16	4096	1	D	MNX	300n	425n	380m	5.0	12	.80	2.4§	10uΔ	0.0	500 Δ	0	7	A191	DL16ab
64	uPD411AD	4096	1	D	MNX	300n	470n	660m	5.0	12	.60	2.4§	3.2m	.40	500 Δ	0	7	A444	ML77f
65	uPD411DM	4096	1	D	MNX	300n	470n	1.0 Ø	5.0	12	.60	2.6§	3.2m	.40	500 Δ	4	8	A444	ML77a
66	uPD414AC	4096	1	D	MNX	300n	425n	462m	5.0	12	.80	2.4	3.2m	.40		0	7	A191	DL16fd
67	uPD414AD	4096	1	D	MNX	300n	425n	462m	5.0	12	.80	2.4	3.2m	.40		0	7	A191	DL16es
68	uPD414C	4096	1	D	MNX	300n	425n	420m†	5.0	12	.80	2.4§	2.0m	.40	500 Δ	0	7	A309	ML89f
69	uPD414D	4096	1	D	MNX	300n	425n	420m†	5.0	12	.80	2.4§	2.0m	.40	500 Δ	0	7	A309	ML127w
70	uPD418C	4096	1	D	MNX	300n	470n	350m	5.0	12	.60	2.2	5.0m	.40	500 Δ	0	7	A446	ML244
71	uPD418D	4096	1	D	MNX	300n	470n	350m	5.0	12	.60	2.2	5.0m	.40	500 Δ	0	7	A446	DL18bb
72	MK4096K-11	4096	1	D	MNX	350n	500n	320m	5.0	12	.80	2.4§	2.0m	.40	500 Δ	0	7	A191	DL16ab
73	MK4096N-11	4096	1	D	MNX	350n	500n	1.0 Ø	5.0	12	.80	2.4§	10uΔ	0.0	500 Δ	0	7	A191	DL16am
74	MK4096N-15	4096	1	D	MNX	350n	500n	1.0 Ø	5.0	15	.80	3.0§	2.0m	.40	1.0kΔ	0	5	A191a	DL16ca
75	MK4096P1	4096	1	D	MNX	350n	200n	360m♦	9.0	12	.80	2.4§	2.0m	.40	500 Δ	0	7	A191	ML140c
76	MK4096P-11	4096	1	D	MNX	350n	500n	1.0 Ø	5.0	12	.80	2.4§	10uΔ	0.0	500 Δ	0	7	A191	DL16ab
77	MK4096P-15	4096	1	D	MNX	350n	500n	1.0 Ø	5.0	15	.80	3.0§	2.0m	.40	1.0kΔ	0	5	A191a	DL16ab
78	MK4096P-85	4096	1	D	MNX	350n	500n	450m	5.0	12	.80	2.4§	10uΔ	0.0	500 Δ	5	8	A191	DLØ
79	MK4200K-11	4096	1	D	MNX	350n	500n	300m	5.0	12	.80	2.4§	10uΔ	0.0	500 Δ	0	7	A191	DL16ab
80	MK4200N-11	4096	1	D	MNX	350n	500n	300m	5.0	12	.80	2.4§	10uΔ	0.0	500 Δ	0	7	A191	DL16am
81	MK4200P-11	4096	1	D	MNX	350n	500n	300m	5.0	12	.80	2.4§	10uΔ	0.0	500 Δ	0	7	A191	DL16ab
82	uPD411AC-E	4096	1	D	MNX	350n	800n	1.0 Ø	5.0	12	.40	2.4	3.2m	.40	100 Δ	0	7	A444	DL22ab
83	uPD411ACE	4096	1	D	MNX	350n	800n	480m	5.0	12	.60	2.4§	3.2m	.40	1.0kΔ	0	7	A444	DL22ab
84	uPD411ADE	4096	1	D	MNX	350n	800n✐	480m	5.0	12	.60	2.4§	3.2m	.40	1.0kΔ	0	7	A444	ML77f
85	uPD411DE	4096	1	D	MNX	350n	800n	1.0 Ø	5.0	12	.60	3.5§	3.2m	.40	1.0k	0	7	A221	ML8j
86	uPD414AC-E	4096	1	D	MNX	350n	500n	462m	5.0	12	.80	2.4	3.2m	.40		0	7	A191	DL16fd
87	uPD414AD-E	4096	1	D	MNX	350n	500n	462m	5.0	12	.80	2.4	3.2m	.40		0	7	A191	DL16es
88	uPD414CE	4096	1	D	MNX	350n	500n	420m†	5.0	12	.80	2.4§	2.0m	.40	500 Δ	0	7	A309	ML89f
89	uPD414DE	4096	1	D	MNX	350n	500n	420m†	5.0	12	.80	2.4§	2.0m	.40	500 Δ	0	7	A309	ML127w
90	IM4096X1	4096	1	S	BEX	15n	25n	120mØ	6.0	0.0	-1.6†	.40	20mØ			0	7		PL2
91	MBM100470C	4096	1	S	BEX	20n		160u	4.5	0.0	-1.8	-.88				0	8	A577	DL18aj
92	MBM100470CF	4096	1	S	BEX	20n		160u	4.5	0.0	-1.8	-.88				0	8	A577	FL108
93	85100711	4096	1	S	BEX	25n	25n	42 †Ø	6.0	0.0	-1.4	-1.0	20m#			0	7	A13	PL2
94	MBM10470-20	4096	1	S	BEX	35n	15n$	.19m%	5.2	0.0	1.85*	.81	30mØ			0	7	PN18cf	DL18ak
95	HM2540	4096	1	S	BTX	45n	35n$	575m	0.0	5.0	.80	2.1Δ	16m	.45		0	7	A392	DL18j
96	93470PC	4096	1	S	BTX	55n	30n$	950m	0.0	5.0	.80	2.1Δ	8.0m	.45		0	7	A316	DL18d
97	RAM125-48A#2	4096	1	S	BTX	125n	130n	4.9 †	5.0	5.0	.80	2.0	30mØ			1	8	A58a	PL3
98	RAM48A#2	4096	1	S	BTX	180n	200n	3.9 †	5.0	5.0	.80	2.0	20m	.40		1	8	A58	PL3
99	RAM248A#2	4096	1	S	BTX	180n	155n	3.9 †	5.0	5.0	.80	2.0	30mØ			1	8	A58a	PL3
100	RAM348A#2	4096	1	S	BTX	300n	300n	3.9 †	5.0	5.0	.80	2.0	30mØ			1	5	A58a	PL3
101	PD550#2	4096	1	S	HXX	100n	125n	2.0 †	0.0	5.0	-.35	-.08				0	7	A6	FL1
102	CM2402	4096	1	S	HXX	400n	600n	400u%†	0.0	5.0	.80	2.0	16m	.40		0	7	A25	ML11
103	HM6504-9	4096	1	S	MCG			35m	0.0	5.0	.80	3.0				4	8	A506	
104	HM6505-9	4096	1	S	MCG			35m	0.0	5.0	.80	3.0				4	8		
105	HM6543-9	4096	1	S	MCG			35m	0.0	5.0	.80	3.0				4	8	A407	
106	HM6543C9	4096	1	S	MCG			35m	0.0	5.0	.80	3.0				4	8	A407	
107	MCM65147-55C	4096	1	S	MCG	55n	55n	1.0	0.0	5	0.8	2.0	12m	0.4		0	7	A418	DL18bk
108	MCM65147-55P	4096	1	S	MCG	55n	55n	1.0	0.0	5	0.8	2.0§	12m	0.4		0	7	A418	DL18bm
109	MCM65147-70C	4096	1	S	MCG	70n	70n	1.0	0.0	5	0.8	2.0	12m	0.4		0	7	A418	DL18bk
110	MCM65147-70P	4096	1	S	MCG	70n	70n	1.0	0.0	5	0.8	2.0	12m	0.4		0	7	A418	DL18bm

SYMBOLS AND CODES EXPLAINED IN INTERPRETER

2. READ-WRITE MEMORIES (RAMS)

IN ORDER OF (1)No.WORDS(2)No.BITS/WORD (3)MODE(4)STRUCT.(5)MAX ACC.TIME(6)TYPE No.

LINE No.	6 TYPE NUMBER	ORGANIZATION 1 NO. OF WORDS	2 BITS PER WORD	3 MODE	4 STRUC-TURE CODE	5 MAX. ACCESS TIME (S)	MAX. WRITE CYCLE TIME (S)	MAX. POWER DISS. (W)	POWER SUPPLY SPAN NEG. (V)	POS. (V)	INPUT LOGIC LEVELS MAX. '0' (V)	MIN. '1' (V)	MIN.OUTPUT SINK CURRENT (A)	@ OUT (V)	MIN. CLOCK FREQ. (Hz)	OPER TEMP RNGE CODE -	+	DRAWINGS FUNCTIONAL EQUIVALENT NUMBER	OUTLINE
1	MB8404E	4096	1	S	MCG	250n	370n	275u♦	0.0	5.0	0.8	2.2§	1.0u△			4	8	PN18ce	DL18ak
2	MB8404EC	4096	1	S	MCG	250n	370n	170u	0.0	5.0	.80	2.2§	3.2m	.40		4	8	PN18ce	DL18aj
3	MB8404EP	4096	1	S	MCG	250n	370n	170u	0.0	5.0	.80	2.2§	3.2m	.40		4	8	PN18ce	DL18ch
4	S6504D	4096	1	S	MCG	300n			0.0	5.0								A578	DL18dd
5	S6504P#ai	4096	1	S	MCG	300n			0.0	5.0								A506	DL18dd
6	HM3-6543-2	4096	1	S	MCG	350n	475n	500u♦	0.0	5.0	.80	3.0§	2.0m	.40		5	C	A407	
7	HM9-6543-9	4096	1	S	MCG	350n	475n	500u♦	0.0	5.0	.80	3.0§	2.0m	.40		4	8	A407	FL59
8	HM9-6543C9	4096	1	S	MCG	400n	560n	5.0m♦	0.0	5.0	.80	3.0§	2.0m	.40		4	8	A407	FL59
9	MCM146504	4096	1	S	MCG	450n		10m♦†	0.0	5.0	.80	3.0§						A416	DL∅
10	TC5504P	4096	1	S	MCG	450n	550n	110m	0.0	5.0	0.8	2.5	2.0m	0.4		3	8	A520a	DL18j
11	TC5504PL	4096	1	S	MCG	450n	550n	110m	0.0	5.0	.80	2.5	2.0m	.40		3	8		DL18j
12	TC5504P-1	4096	1	S	MCG	550n	700n	110m	0.0	5.0	0.8	2.5	2.0m	0.4		3	8	A520a	DL18e
13	TC5504PL-1	4096	1	S	MCG	550n	700n	110m	0.0	5.0	.80	2.5	2.0m	.40		3	8		DL18j
14	TC5504P-2	4096	1	S	MCG	800n	1.0u	110m	0.0	5.0	0.8	2.5	2.0m	0.4		3	8	A520a	DL18j
15	TC5504PL-2	4096	1	S	MCG	800n	1.0u	110m	0.0	5.0	.80	2.5	2.0m	.40		3	8		DL18j
16	D5104-10	4096	1	S	MCX	100n	100n	1.0 ∅	0.0	5.5	0.8	2.0	4.0m	0.4		0	6	A497	
17	P5104-10	4096	1	S	MCX	100n	100n	1.0 ∅	0.0	5.5	0.8	2.0	4.0m	0.4		0	6	A497	
18	D5104-15	4096	1	S	MCX	150n	150n	1.0 ∅	0.0	5.5	0.8	2.0	4.0m	0.4		0	6	A497	
19	P5104-15	4096	1	S	MCX	150n	150n	1.0 ∅	0.0	5.5	0.8	2.0	4.0m	0.4		0	6	A497	
20	D5104-20	4096	1	S	MCX	200n	200n	1.0 ∅	0.0	55	0.8	2.0	4.0m	0.4		0	6	A497	
21	P5104-20	4096	1	S	MCX	200n	200n	1.0 ∅	0.0	5.5	0.8	2.0	4.0m	0.4		0	6	A497	
22	MBM6504	4096	1	S	MCX	300n	300n		0.0	5.0	.80	2.0	3.2m	.45		4	8		DL∅
23	MK2147J-55	4096	1	S	MN∅	55n	55n	900m	0.0	5.0	.80	2.0§	50u△			0	7	PN18w	DL18bf
24	MK2147J-70	4096	1	S	MN∅	70n	70n	800m	0.0	5.0	.80	2.0§	50u△			0	7	PN18w	DL18bf
25	MK2147J-90	4096	1	S	MN∅	90n	90n	800m	0.0	5.0	.80	2.0§	50u△			0	7	PN18w	DL18bf
26	MBM2147F35Z	4096	1	S	MNG	35n	35n	1.2 ∅	0.0	5.0	.80	2.0§	8.0m	.40		0	7	A497	DL18bo
27	MBM2147H35C	4096	1	S	MNG	35n	35n	1.2 ∅	0.0	5.0	.80	2.0§	8.0m	.40		0	7	A497	DL18ca
28	MBM2147H35F	4096	1	S	MNG	35n	35n	1.2 ∅	0.0	5.0	.80	2.0§	8.0m	.40		0	7	A497	DL18bz
29	TMS2147H3JL	4096	1	S	MNG	35n	35n	660m	0.0	5.0	0.8	2.0§	8.0m	0.4		0	7	A418	DL18ar
30	TMS2147H3NL	4096	1	S	MNG	35n	35n	660m	0.0	5.0	0.8	2.0§	8.0m	0.4		0	7	A418	DL18ar
31	MBM2147F45Z	4096	1	S	MNG	45n	45n	1.2 ∅	0.0	5.0	.80	2.0§	8.0m	.40		0	7	A497	DL18bo
32	MBM2147H45C	4096	1	S	MNG	45n	45n	1.2 ∅	0.0	5.0	.80	2.0§	8.0m	.40		0	7	A497	DL18ca
33	MBM2147H45F	4096	1	S	MNG	45n	45n	1.2 ∅	0.0	5.0	.80	2.0§	8.0m	.40		0	7	A497	DL18bz
34	TMS2147H4JL	4096	1	S	MNG	45n	45n	660m	0.0	5.0	0.8	2.0§	8.0m	0.4		0	7	A418	DL18ar
35	TMS2147H4NL	4096	1	S	MNG	45n	45n	660m	0.0	5.0	0.8	2.0§	8.0m	0.4		0	7	A418	DL18ar
36	HM4847-3	4096	1	S	MNG	55n	55n	850m	0.0	5.0	.80	2.0§	50u△	4.5		0	7	A418	DL18s
37	MCM2147P55	4096	1	S	MNG	55n	55n	850mØ	0.0	5.0	.80	2.0§	8.0m	.40		0	7	A418	DL18bp
38	MK4147N-55	4096	1	S	MNG	55n	55n	500m	0.0	5.0	.80	2.0	50u△	4.5		0	7	PN18w	DL18bg
39	SYC2147-3	4096	1	S	MNG	55n	55n	900m	0.0	5.0	.80	2.0§	50u△	4.5		0	7	A497	DL18x
40	SYD2147-3	4096	1	S	MNG	55n	55n	1.2 ∅	0.0	5.0	0.8	2.0§	8.0m	0.4		0	7	A497	DL18bn
41	TMS2147-5NL	4096	1	S	MNG	55n	55n	1.2	0.0	5.0	.80	2.0§	50u			0	7	A418	DL18ar
42	TMS2147H5JL	4096	1	S	MNG	55n	55n	660m	0.0	5.0	0.8	2.0§	8.0m	0.4		0	7	A418	DL18ar
43	TMS2147H5NL	4096	1	S	MNG	55n	55n	660m	0.0	5.0	0.8	2.0§	8.0m	0.4		0	7	A418	DL18ar
44	HM4847	4096	1	S	MNG	70n	70n	800m	0.0	5.0	.80	2.0§	50u△	4.5		0	7	A418	DL18s
45	MCM2147P70	4096	1	S	MNG	70n	70n	750mØ	0.0	5.0	.80	2.0§	8.0m	.40		0	7	A418	DL18bp
46	MCM2148C70	4096	1	S	MNG	70n	70n	1.2 ∅	0.0	5.0	.80	2.0§	8.0m	.40		0	7	A553	DL18by
47	MCM2148HC70	4096	1	S	MNG	70n	70n	1.2 ∅	0.0	5.0	.80	2.0§	8.0m	.40		0	7	A553	DL18by
48	MCM2148HL70	4096	1	S	MNG	70n	70n	1.2 ∅	0.0	5.0	.80	2.0§	8.0m	.40		0	7	A553	DL18an
49	MCM2148L70	4096	1	S	MNG	70n	70n	1.2 ∅	0.0	5.0	.80	2.0§	8.0m	.40		0	7	A553	DL18an
50	MK4147J-70	4096	1	S	MNG	70n	70n	500m	0.0	5.0	.80	2.0	50u△	4.5		0	7	PN18w	DL18bf
51	MK4147N-70	4096	1	S	MNG	70n	70n	500m	0.0	5.0	.80	2.0	50u△	4.5		0	7	PN18w	DL18bg
52	MM2147N-055	4096	1	S	MNG	70n	70n	900m	0.0	5.0	.80	2.0	8.0m	.40		0	5	A418	DL18p
53	SYC2147	4096	1	S	MNG	70n	70n	800m	0.0	5.0	.80	2.0§	50u△	4.5		0	7	A497	DL18x
54	SYC2147L	4096	1	S	MNG	70n	70n	700m	0.0	5.0	.80	2.0§	50u△	4.5		0	7	A497	DL18x
55	SYD2147	4096	1	S	MNG	70n	70n	1.2 ∅	0.0	5.0	0.8	2.0§	8.0m	0.4		0	7	A497	DL18bn
56	SYD2147L	4096	1	S	MNG	70n	70n	1.2 ∅	0.0	5.0	0.8	2.0§	8.0m	0.4		0	7	A497	DL18bn
57	SYMD2147#ai	4096	1	S	MNG	70n	70n		0.0	5.0		§				5	C	A497	DL18bn
58	SYMF2147#ai	4096	1	S	MNG	70n	70n		0.0	5.0		§				5	C	A497	FL∅
59	TMS21L47-7NL	4096	1	S	MNG	70n	70n	1.2	0.0	5.0	.80	2.0§	50u			0	7	A452	DL18ar
60	TMS2147-7NL	4096	1	S	MNG	70n	70n	1.2	0.0	5.0	.80	2.0§	50u			0	7	A418	DL18ar
61	TMS2147H7JL	4096	1	S	MNG	70n	70n	660m	0.0	5.0	0.8	2.0§	8.0m	0.4		0	7	A418	DL18ar
62	TMS2147H7NL	4096	1	S	MNG	70n	70n	660m	0.0	5.0	0.8	2.0§	8.0m	0.4		0	7	A418	DL18ar
63	MCM2147P85	4096	1	S	MNG	85n	85n	650mØ	0.0	5.0	.80	2.0§	8.0m	.40		0	7	A418	DL18bp
64	MCM2148C85	4096	1	S	MNG	85n	85n	1.2 ∅	0.0	5.0	.80	2.0§	8.0m	.40		0	7	A553	DL18by
65	MCM2148L85	4096	1	S	MNG	85n	85n	1.2 ∅	0.0	5.0	.80	2.0§	8.0m	.40		0	7	A553	DL18an
66	MK4147J-85	4096	1	S	MNG	85n	85n	500m	0.0	5.0	.80	2.0	50u△	4.5		0	7	PN18w	DL18bf
67	MK4147N-85	4096	1	S	MNG	85n	85n	500m	0.0	5.0	.80	2.0	50u△	4.5		0	7	PN18w	DL18bg
68	SYD2147-6	4096	1	S	MNG	85n	85n	1.2 ∅	0.0	5.0	0.8	2.0§	8.0m	0.4		0	7	A497	DL18bn
69	SYMC2147-6#ai	4096	1	S	MNG	85n	85n		0.0	5.0		§				5	C	A497	DL18cn
70	SYMD2147-6#ai	4096	1	S	MNG	85n	85n		0.0	5.0		§				5	C	A497	DL18bn
71	SYMF2147-6#ai	4096	1	S	MNG	85n	85n		0.0	5.0		§				5	C	A497	FL∅
72	uPD410D-3	4096	1	S	MNG	90n	220n	1.0 ∅	5.0	12	.60	2.4§	10u△	5.25		0	7	A443a	DL22r
73	MCM2147P100	4096	1	S	MNG	100n	100n	550mØ	0.0	5.0	.80	2.0§	8.0m	.40		0	7	A418	DL18bp
74	2141-UCB	4096	1	S	MNG	120n	120n		0.0	5.0								A418	DL18∅
75	2141-UCE	4096	1	S	MNG	120n	120n		0.0	5.0								A418	DL18∅
76	P2141-2	4096	1	S	MNG	120n	120n	1.2 ∅	0.0	5.0	.80	2.0§	10u△	4.5		0	7	A418	DL18bi
77	P2141-4	4096	1	S	MNG	120n	120n	1.2 ∅	0.0	5.0	.80	2.0§	10u△	4.5		0	7	A418	DL18bi
78	TMS40L44-12NL	4096	1	S	MNG	120n	120n	220m	0.0	5.0	0.8	2.0§	3.2m	0.4		0	7	40-44B	DL18f
79	TMS4044-12NL	4096	1	S	MNG	120n	120n	303m	0.0	5.0	0.8	2.0§	3.2m	0.4		0	7	40-44B	DL18f
80	TMS4244JL	4096	1	S	MNG	120n	120n	300m†	0.0	5.0	.80	2.0				0	7	PN18i	DL18b
81	TMS4244NL	4096	1	S	MNG	120n	120n	300m†	0.0	5.0	.80	2.0				0	7	PN18i	DL18f
82	MBM4044H	4096	1	S	MNG	150n	150n	473m	0.0	5.0	.80	2.0	2.1m	.40		0	7	40-44	DL∅
83	P2141-3	4096	1	S	MNG	150n	150n	1.2 ∅	0.0	5.0	.80	2.0§	10u△	4.5		0	7	A418	DL18bi
84	P2141L3	4096	1	S	MNG	150n	150n	1.2 ∅	0.0	5.0	.80	2.0§	10u△	4.5		0	7	A418	DL18bi
85	TMS4044-15JDL	4096	1	S	MNG	150n	150n	440m	0.0	5.0	.80	2.0§	3.2m	.40		0	7	40-44	DL18ag
86	TMS4044-15JL	4096	1	S	MNG	150n	150n	440m	0.0	5.0	.80	2.0§	3.2m	.40		0	7	40-44	DL18b
87	TMS4046-15JDL	4096	1	S	MNG	150n	150n	440m	0.0	5.0	.80	2.0§	3.2m	.40		0	7	A327a	ML260
88	TMS4046-15JL	4096	1	S	MNG	150n	150n	440m	0.0	5.0	.80	2.0§	2.0m	.40		0	7	A327a	DL20u
89	TMS4046-15NL	4096	1	S	MNG	150n	150n	440m	0.0	5.0	.80	2.0§	3.2m	.40		0	7	A327a	DL20y
90	Z6104-2CS	4096	1	S	MNG	150n	240n		0.0	5.0	-.30*	2.0				0	7	A526	DL18at
91	Z6104-2PS	4096	1	S	MNG	150n	240n		0.0	5.0	-.30*	2.0				0	7	A526	DL18at
92	KMS4104	4096	1	S	MNG	200n	310n△	120m	0.0	5.0		§							
93	MBM4044E	4096	1	S	MNG	200n	200n	473m	0.0	5.0	.80	2.0	2.1m	.40		0	7	40-44	DL18ak
94	MCM66L41-20C	4096	1	S	MNG	200n	200n	385m	0.0	5.0	.80	2.0§	2.1m	.40		0	7	40-44	DL18bc
95	MCM66L41-20JL	4096	1	S	MNG	200n	200n	350m	0.0	5.0	.80	2.0§	2.1m	.40		0	7	40-44	DL18an
96	MCM66L41-20NL	4096	1	S	MNG	200n	200n	350m	0.0	5.0	.80	2.0§	2.1m	.40		0	7	40-44	DL18an
97	MCM66L41-20P	4096	1	S	MNG	200n	200n	385m	0.0	5.0	.80	2.0§	2.1m	.40		0	7	74S401	DL18bp
98	MCM6641-20C	4096	1	S	MNG	200n	200n	550m	0.0	5.0	.80	2.0§	2.1m	.40		0	7	40-44	DL18bc
99	MCM6641-20JL	4096	1	S	MNG	200n	200n	500m	0.0	5.0	.80	2.0§	2.1m	.40		0	7	40-44	DL18an
100	MCM6641-20NL	4096	1	S	MNG	200n	200n	500m	0.0	5.0	.80	2.0§	2.1m	.40		0	7	40-44	DL18an
101	MCM6641-20P	4096	1	S	MNG	200n	200n	550m	0.0	5.0	.80	2.0§	2.1m	.40		0	7	74S401	DL18bp
102	MK4104P-3	4096	1	S	MNG	200n	310n	150m	0.0	5.0	.80	2.2	5.0m	.40		0	7	A303	DL18au
103	MK4104P-33	4096	1	S	MNG	200n	310n	150m	0.0	5.0	.80	2.2	5.0m	.40		0	7	A303	DL18au
104	P2141L4	4096	1	S	MNG	200n	200n	1.2 ∅	0.0	5.0	.80	2.0§	10u△	4.5		0	7	A418	DL18bi
105	TMS40L44-20JDL																		
		4096	1	S	MNG	200n	200n	275m	0.0	5.0	.80	2.0§	3.2m	.40		0	7	40-44	DL18ag
106	TMS40L44-20JL	4096	1	S	MNG	200n	200n	275m	0.0	5.0	.80	2.0§	3.2m	.40		0	7	40-44	DL18b
107	TMS40L46-20JDL																		
		4096	1	S	MNG	200n	200n	275m	0.0	5.0	.80	2.0§	3.2m	.40		0	7	A327a	ML260
108	TMS40L46-20JL	4096	1	S	MNG	200n	200n	275m	0.0	5.0	.80	2.0§	3.2m	.40		0	7	A327a	DL20u

SYMBOLS AND CODES EXPLAINED IN INTERPRETER

2. READ-WRITE MEMORIES (RAMS)

IN ORDER OF (1)No.WORDS(2)No.BITS/WORD (3)MODE(4)STRUCT.(5)MAX ACC.TIME(6)TYPE No.

LINE No.	6 TYPE NUMBER	ORGANIZATION 1 NO. OF WORDS	2 BITS PER WORD	3 MODE	4 STRUC-TURE CODE	5 MAX. ACCESS TIME (S)	MAX. WRITE CYCLE TIME (S)	MAX. POWER DISS. (W)	POWER SUPPLY SPAN NEG. (V)	POS. (V)	INPUT LOGIC LEVELS MAX. '0' (V)	MIN. '1' (V)	MIN.OUTPUT SINK CURRENT (A)	@ OUT (V)	MIN. CLOCK FREQ. (Hz)	OPER TEMP RNGE CODE -	+	DRAWINGS FUNCTIONAL EQUIVALENT NUMBER	OUTLINE
1	TMS40L46-20NL	4096	1	S	MNG	200n	200n	275m	0.0	5.0	.80	2.0§	3.2m	.40		0	7	A327a	DL20y
2	TMS4044-20JDL	4096	1	S	MNG	200n	200n	440m	0.0	5.0	.80	2.0§	3.2m	.40		0	7	40-44	DL18ag
3	TMS4044-20JL	4096	1	S	MNG	200n	200n	440m	0.0	5.0	.80	2.0§	3.2m	.40		0	7	40-44	DL18b
4	TMS4044-20NL	4096	1	S	MNG	200n	200n	303m	0.0	5.0	.80	2.0§	3.2m	.40		0	7	40-44B	DL18f
5	TMS4046-20JDL	4096	1	S	MNG	200n	200n	440m	0.0	5.0	.80	2.0§	3.2m	.40		0	7	A327a	ML260
6	TMS4046-20JL	4096	1	S	MNG	200n	200n	440m	0.0	5.0	.80	2.0§	3.2m	.40		0	7	A327a	DL20u
7	TMS4046-20NL	4096	1	S	MNG	200n	200n	440m	0.0	5.0	.80	2.0§	3.2m	.40		0	7	A327a	DL20y
8	Z6104-3CS	4096	1	S	MNG	200n	320n		0.0	5.0	-.30*	2.0				0	7	A526	DL18at
9	Z6104-3PS	4096	1	S	MNG	200n	320n		0.0	5.0	-.30*	2.0				0	7	A526	DL18at
10	MCM66L41-25C	4096	1	S	MNG	250n	250n	385m	0.0	5.0	.80	2.0§	2.1m	.40		0	7	74S401	DL18bc
11	MCM66L41-25JL	4096	1	S	MNG	250n	250n	350m	0.0	5.0	.80	2.0§	2.1m	.40		0	7	40-44	DL18an
12	MCM66L41-25NL	4096	1	S	MNG	250n	250n	350m	0.0	5.0	.80	2.0§	2.1m	.40		0	7	40-44	DL18an
13	MCM66L41-25P	4096	1	S	MNG	250n	250n	385m	0.0	5.0	.80	2.0§	2.1m	.40		0	7	74S401	DL18bp
14	MCM6641-25C	4096	1	S	MNG	250n	250n	550m	0.0	5.0	.80	2.0§	2.1m	.40		0	7	40-44	DL18bc
15	MCM6641-25JL	4096	1	S	MNG	250n	250n	500m	0.0	5.0	.80	2.0§	2.1m	.40		0	7	40-44	DL18an
16	MCM6641-25NL	4096	1	S	MNG	250n	250n	500m	0.0	5.0	.80	2.0§	2.1m	.40		0	7	40-44	DL18an
17	MCM6641-25P	4096	1	S	MNG	250n	250n	550m	0.0	5.0	.80	2.0§	2.1m	.40		0	7	74S401	DL18bp
18	MK4104P-4	4096	1	S	MNG	250n	385n	150m	0.0	5.0	.80	2.2	5.0m	.40		0	7	A303	DL18au
19	MK4104P-34	4096	1	S	MNG	250n	385n	150m	0.0	5.0	.80	2.2	5.0m	.40		0	7	A303	DL18au
20	P2141-5	4096	1	S	MNG	250n	250n	1.2 ∅	0.0	5.0	.80	2.0§	10u∆	4.5		0	7	A418	DL18bi
21	P2141L5	4096	1	S	MNG	250n	250n	1.2 ∅	0.0	5.0	.80	2.0§	10u∆	4.5		0	7	A418	DL18bi
22	TMS40L44-25JDL	4096	1	S	MNG	250n	250n	275m	0.0	5.0	.80	2.0§	3.2m	.40		0	7	40-44	DL18ag
23	TMS40L44-25JL	4096	1	S	MNG	250n	250n	275m	0.0	5.0	.80	2.0§	3.2m	.40		0	7	40-44	DL18b
24	TMS40L46-25JDL	4096	1	S	MNG	250n	250n	275m	0.0	5.0	.80	2.0§	3.2m	.40		0	7	A327a	ML260
25	TMS40L46-25JL	4096	1	S	MNG	250n	250n	275m	0.0	5.0	.80	2.0§	3.2m	.40		0	7	A327a	DL20u
26	TMS40L46-25NL	4096	1	S	MNG	250n	250n	275m	0.0	5.0	.80	2.0§	3.2m	.40		0	7	A327a	DL20y
27	TMS4044-25JDL	4096	1	S	MNG	250n	250n	440m	0.0	5.0	.80	2.0§	3.2m	.40		0	7	40-44	DL18ag
28	TMS4044-25JL	4096	1	S	MNG	250n	250n	440m	0.0	5.0	.80	2.0§	2.0m	.40		0	7	40-44	DL18b
29	TMS4044-25NL	4096	1	S	MNG	250n	250n	303m	0.0	5.0	.80	2.0§	3.2m	.40		0	7	40-44B	DL18f
30	TMS4046-25JDL	4096	1	S	MNG	250n	250n	440m	0.0	5.0	.80	2.0§	3.2m	.40		0	7	A327a	ML260
31	TMS4046-25JL	4096	1	S	MNG	250n	250n	440m	0.0	5.0	.80	2.0§	3.2m	.40		0	7	A327a	DL20u
32	TMS4046-25NL	4096	1	S	MNG	250n	250n	440m	0.0	5.0	.80	2.0§	3.2m	.40		0	7	A327a	DL20y
33	Z6104-4CS	4096	1	S	MNG	250n	380n		0.0	5.0	-.30*	2.0				0	7	A526	DL18at
34	Z6104-4PS	4096	1	S	MNG	250n	380n		0.0	5.0	-.30*	2.0				0	7	A526	DL18at
35	Z6104L-4CS	4096	1	S	MNG	250n	380n		0.0	5.0	-.3*	2.0				0	7	A526	DL18at
36	Z6104L-4PS	4096	1	S	MNG	250n	380n		0.0	5.0	-.30*	2.0				0	7	A526	DL18at
37	MBM4044N	4096	1	S	MNG	300n	300n	473m	0.0	5.0	.80	2.0	2.1m	.40		0	7	40-44	DL18ak
38	MCM66L41-30C	4096	1	S	MNG	300n	300n	385m	0.0	5.0	.80	2.0§	2.1m	.40		0	7	74S401	DL18bc
39	MCM66L41-30JL	4096	1	S	MNG	300n	300n	350m	0.0	5.0	.80	2.0§	2.1m	.40		0	7	40-44	DL18an
40	MCM66L41-30NL	4096	1	S	MNG	300n	300n	350m	0.0	5.0	.80	2.0§	2.1m	.40		0	7	40-44	DL18an
41	MCM66L41-30P	4096	1	S	MNG	300n	300n	385m	0.0	5.0	.80	2.0§	2.1m	.40		0	7	74S401	DL18bp
42	MCM6641-30C	4096	1	S	MNG	300n	300n	550m	0.0	5.0	.80	2.0§	2.1m	.40		0	7	40-44	DL18bc
43	MCM6641-30JL	4096	1	S	MNG	300n	300n	500m	0.0	5.0	.80	2.0§	2.1m	.40		0	7	40-44	DL18an
44	MCM6641-30NL	4096	1	S	MNG	300n	300n	500m	0.0	5.0	.80	2.0§	2.1m	.40		0	7	40-44	DL18an
45	MCM6641-30P	4096	1	S	MNG	300n	300n	550m	0.0	5.0	.80	2.0§	2.1m	.40		0	7	74S401	DL18bp
46	MK4104P-5	4096	1	S	MNG	300n	460n	150m	0.0	5.0	.80	2.2	5.0m	.40		0	7	A303	DL18au
47	MK4104P-35	4096	1	S	MNG	300n	460n	150m	0.0	5.0	.80	2.2	5.0m	.40		0	7	A303	DL18au
48	TMS4044-30JL	4096	1	S	MNG	300n	300n	495m	0.0	5.0	.80	2.0§	2.0m	.40		0	7	40-44	ML210
49	TMS4044-30NL	4096	1	S	MNG	300n	300n	495m	0.0	5.0	.80	2.0§	2.0m	.40		0	7	40-44	DL18b
50	TMS4046-30JL	4096	1	S	MNG	300n	300n	495m	0.0	5.0	.80	2.0§	2.0m	.40		0	7	A327a	DL∅
51	TMS4046-30NL	4096	1	S	MNG	300n	300n	495m	0.0	5.0	.80	2.0§	2.0m	.40		0	7	A327a	DL∅
52	MK4104P-6	4096	1	S	MNG	350n	565n	150m	0.0	5.0	.80	2.2	5.0m	.40		0	7	A303	DL18au
53	MCM66L41-45C	4096	1	S	MNG	450n	450n	385m	0.0	5.0	.80	2.0§	2.1m	.40		0	7	74S401	DL18bc
54	MCM66L41-45JL	4096	1	S	MNG	450n	450n	350m	0.0	5.0	.80	2.0§	2.1m	.40		0	7	40-44	DL18an
55	MCM66L41-45NL	4096	1	S	MNG	450n	450n	350m	0.0	5.0	.80	2.0§	2.1m	.40		0	7	40-44	DL18an
56	MCM66L41-45P	4096	1	S	MNG	450n	450n	385m	0.0	5.0	.80	2.0§	2.1m	.40		0	7	74S401	DL18bp
57	MCM6641-45C	4096	1	S	MNG	450n	450n	550m	0.0	5.0	.80	2.0§	2.1m	.40		0	7	40-44	DL18bc
58	MCM6641-45JL	4096	1	S	MNG	450n	450n	500m	0.0	5.0	.80	2.0§	2.1m	.40		0	7	40-44	DL18an
59	MCM6641-45NL	4096	1	S	MNG	450n	450n	500m	0.0	5.0	.80	2.0§	2.1m	.40		0	7	40-44	DL18an
60	MCM6641-45P	4096	1	S	MNG	450n	450n	550m	0.0	5.0	.80	2.0§	2.1m	.40		0	7	74S401	DL18bp
61	TMS40L44-45JDL	4096	1	S	MNG	450n	450n	275m	0.0	5.0	.80	2.0§	3.2m	.40		0	7	40-44	DL18ag
62	TMS40L44-45JL	4096	1	S	MNG	450n	450n	275m	0.0	5.0	.80	2.0§	3.2m	.40		0	7	40-44	DL18b
63	TMS40L46-45JDL	4096	1	S	MNG	450n	450n	275m	0.0	5.0	.80	2.0§	3.2m	.40		0	7	A327a	ML260
64	TMS40L46-45JL	4096	1	S	MNG	450n	450n	275m	0.0	5.0	.80	2.0§	3.2m	.40		0	7	A327a	DL20u
65	TMS40L46-45NL	4096	1	S	MNG	450n	450n	275m	0.0	5.0	.80	2.0§	3.2m	.40		0	7	A327a	DL20y
66	TMS4044-45JDL	4096	1	S	MNG	450n	450n	440m	0.0	5.0	.80	2.0§	3.2m	.40		0	7	40-44	DL18ag
67	TMS4044-45JL	4096	1	S	MNG	450n	450n	440m	0.0	5.0	.80	2.0§	3.2m	.40		0	7	40-44	DL18b
68	TMS4044-45NL	4096	1	S	MNG	450n	450n	303m	0.0	5.0	.80	2.0§	3.2m	.40		0	7	40-44B	DL18f
69	TMS4046-45JDL	4096	1	S	MNG	450n	450n	440m	0.0	5.0	.80	2.0§	3.2m	.40		0	7	A327a	ML260
70	TMS4046-45JL	4096	1	S	MNG	450n	450n	440m	0.0	5.0	.80	2.0§	3.2m	.40		0	7	A327a	DL20u
71	TMS4046-45NL	4096	1	S	MNG	450n	450n	440m	0.0	5.0	.80	2.0§	3.2m	.40		0	7	A327a	DL20y
72	uPD4104C-30	4096	1	S	MNX		460n∆	115m	0.0	5.0	.80	2.2				0	7		
73	uPD4104C-33	4096	1	S	MNX		260n∆	220m	0.0	5.0	.80	2.2				0	7		
74	uPD4104C-36	4096	1	S	MNX		180n∆	220m	0.0	5.0	.80	2.2				0	7		
75	uPD4104D-30	4096	1	S	MNX		460n∆	115m	0.0	5.0	.80	2.2				0	7		
76	uPD4104D-33	4096	1	S	MNX		260n∆	220m	0.0	5.0	.80	2.2				0	7		
77	uPD4104D-35	4096	1	S	MNX		230n∆	220m	0.0	5.0	.80	2.2				0	7		
78	uPD4104D-36	4096	1	S	MNX		180n∆	220m	0.0	5.0	.80	2.2				0	7		
79	uPD41046-35	4096	1	S	MNX		230n∆	220m	0.0	5.0	.80	2.2				0	7		
80	SBB2147HD1	4096	1	S	MNX	35n				5.0	0.80	2.0§						A497	DL18cx
81	SBB2147HP1	4096	1	S	MNX	35n				5.0	0.80	2.0§						A497	DL18cw
82	HM4847-2	4096	1	S	MNX	45n	45n	500m†	0.0	5.0	.80	2.0§	50u∆	5.25		0	7	A418	DL18s
83	SBB2147HD2	4096	1	S	MNX	45n				5.0	0.80	2.0§						A497	DL18cx
84	SBB2147HP2	4096	1	S	MNX	45n				5.0	0.80	2.0§						A497	DL18cw
85	ITT2147-55D	4096	1	S	MNX	55n	55n	1.0 ∅	0.0	5	0.8	2.0§	8.0m	.4		0	7	A497	DL18dj
86	ITT2147-55J	4096	1	S	MNX	55n	55n	1.0 ∅	0.0	5	0.8	2.0§	8.0m	.4		0	7	A497	DL18dh
87	ITT2147-55N	4096	1	S	MNX	55n	55n	1.0 ∅	0.0	5	0.8	2.0§	8.0m	.4		0	7	A497	DL18dk
88	ITT2147H-55D	4096	1	S	MNX	55n	55n	1.0 ∅	0.0	5	0.8	2.0§	8.0m	.4		0	7	A497	DL18dj
89	ITT2147H-55N	4096	1	S	MNX	55n	55n	1.0 ∅	0.0	5	0.8	2.0§	8.0m	.4		0	7	A497	DL18dk
90	SBB2147HD3	4096	1	S	MNX	55n				5.0	0.80	2.0§						A497	DL18cx
91	SBB2147HD4	4096	1	S	MNX	55n				5.0	0.80	2.0§						A497	DL18cx
92	SBB2147HP3	4096	1	S	MNX	55n				5.0	0.80	2.0§						A497	DL18cw
93	SBB2147HP4	4096	1	S	MNX	55n				5.0	0.80	2.0§						A497	DL18cw
94	4502-ACD	4096	1	S	MNX	65n	220n	790m	5.0	13	.80	2.4				0	7	A285	DL22aa
95	4502ABD	4096	1	S	MNX	65n	220n	790m	5.0	13	.80	2.4				0	7	A285a	DL22aa
96	ITT2147-70D	4096	1	S	MNX	70n	70n	1.0 ∅	0.0	5	0.8	2.0§	8.0m	.4		0	7	A497	DL18dj
97	ITT2147-70J	4096	1	S	MNX	70n	70n	1.0 ∅	0.0	5	0.8	2.0§	8.0m	.4		0	7	A497	DL18dh
98	ITT2147-70LD	4096	1	S	MNX	70n	70n	1.0 ∅	0.0	5	0.8	2.0§	8.0m	.4		0	7	A497	DL18dj
99	ITT2147-70LJ	4096	1	S	MNX	70n	70n	1.0 ∅	0.0	5	0.8	2.0§	8.0m	.4		0	7	A497	DL18dh
100	ITT2147-70LN	4096	1	S	MNX	70n	70n	1.0 ∅	0.0	5	0.8	2.0§	8.0m	.4		0	7	A497	DL18dk
101	ITT2147-70N	4096	1	S	MNX	70n	70n	1.0 ∅	0.0	5	0.8	2.0§	8.0m	.4		0	7	A497	DL18dk
102	ITT2147-90N	4096	1	S	MNX	70n	70n	1.0 ∅	0.0	5	0.8	2.0§	8.0m	.4		0	7	A497	DL18dk
103	MBM2147E	4096	1	S	MNX	70n	70n	525m	0.0	5.0	.80	2.1	12m	.45		0	7	A418	DL18ak
104	uPD2417D-3	4096	1	S	MNX	75n	55n	800m	0.0	5.0	.80	2.0	8.0m	.40		1	8	A418	DL18bb
105	ITT2147-90D	4096	1	S	MNX	90n	90n	1.0 ∅	0.0	5	0.8	2.0§	8.0m	.4		0	7	A497	DL18dj
106	ITT2147-90J	4096	1	S	MNX	90n	90n	1.0 ∅	0.0	5	0.8	2.0§	8.0m	.4		0	7	A497	DL18dh

SYMBOLS AND CODES EXPLAINED IN INTERPRETER

2. READ-WRITE MEMORIES (RAMS)

IN ORDER OF (1)No.WORDS(2)No.BITS/WORD (3)MODE(4)STRUCT.(5)MAX ACC.TIME(6)TYPE No.

LINE No.	6 TYPE NUMBER	ORGANIZATION 1 NO. OF WORDS	2 BITS PER WORD	3 MODE	4 STRUC-TURE CODE	5 MAX. ACCESS TIME (S)	MAX. WRITE CYCLE TIME (S)	MAX. POWER DISS. (W)	POWER SUPPLY SPAN NEG. (V)	POS. (V)	INPUT LOGIC LEVELS MAX. '0' (V)	MIN. '1' (V)	MIN.OUTPUT SINK CURRENT (A)	@ OUT (V)	MIN. CLOCK FREQ. (Hz)	OPER TEMP RNGE CODE -	+	DRAWINGS FUNCTIONAL EQUIVALENT NUMBER	OUTLINE
1	uPD2417D-2	4096	1	S	MNX	90n	70n	800m	0.0	5.0	.80	2.0	8.0m	.40		1	8	A418	DL18bb
2	MBM2147N	4096	1	S	MNX	95n	95n	525m	0.0	5.0	.80	2.1	12m	.45		0	7	A418	DL18ak
3	4402BCC	4096	1	S	MNX	100n	300n	615m	5.0	12	.70	3.0				0	7	A285	ML162c
4	4402BCD	4096	1	S	MNX	100n	300n	615m	5.0	12	.70	3.0				0	7	A285	DL22aa
5	uPD410D2	4096	1	S	MNX	100n	220n	470m	5.0	12	.60	2.4§	3.2m	.40		0	7	A221	DL22r
6	uPD410D	4096	1	S	MNX	100n	220n	1.0 ☑	5.0	12	.60	2.4§	3.2m	.40		0	7	A443	DL22r
7	uPD2147D-1	4096	1	S	MNX	105n	85n	800m	0.0	5.0	.80	2.0	8.0m	.40		1	8	A418	DL18bb
8	4300ACC	4096	1	S	MNX	120n	250n	550m	5.0	12	.80	2.4§	2.0m	.50		0	7	A284a	ML162c
9	4300ACD	4096	1	S	MNX	120n	250n	550m	5.0	12	.80	2.4§	2.0m	.50		0	7	A284a	DL22aa
10	4300ACP	4096	1	S	MNX	120n	250n	550m	5.0	12	.80	2.4§	2.0m	.50		0	7	A284a	DL22an
11	4200BCC	4096	1	S	MNX	150n	300n	1.6 ☑	5.0	12	.70	2.4§	2.0m	.50		0	7	A284	ML8t
12	4200BCD	4096	1	S	MNX	150n	300n	675m	5.0	12	.70	2.4§	2.0m	.50		0	7	A284a	DL22aa
13	4200BCP	4096	1	S	MNX	150n	300n	1.6 ☑	5.0	12	.70	2.4§	2.0m	.50		0	7	A284a	DL22ak
14	4402ACC	4096	1	S	MNX	150n	350n	615m	5.0	12	.70	3.0				0	7	A285	ML162c
15	4402ACD	4096	1	S	MNX	150n	350n	615m	5.0	12	.70	3.0				0	7	A285	DL22aa
16	L2141-3	4096	1	S	MNX	150n			0.0	5.0		§							
17	uPD410D1	4096	1	S	MNX	150n	330n	470m	5.0	12	.60	2.4§	3.2m	.40		0	7	A221	DL22r
18	uPD410D-1	4096	1	S	MNX	150n	330n	1.0 ☑	5.0	12	.60	2.4	3.2m	.40		0	7	A443	DL22r
19	4200A	4096	1	S	MNX	200n	350n	650m	5.0	12	.70	2.4§	2.0m	.50		0	7	A284	ML8r
20	4200ACC	4096	1	S	MNX	200n	350n	1.6 ☑	5.0	12	.70	2.4§	2.0m	.50		0	7	A284	ML8t
21	4200ACD	4096	1	S	MNX	200n	350n	675m	5.0	12	.70	2.4§	2.0m	.50		0	7	A284a	DL22aa
22	4200ACP	4096	1	S	MNX	200n	350n	1.6 ☑	5.0	12	.70	2.4§	2.0m	.50		0	7	A284a	DL22ak
23	4200USC	4096	1	S	MNX	200n	350n	750m	5.0	12	.70	2.4§	2.0m	.50		3	8	A284b	DL22h
24	4402	4096	1	S	MNX	200n	350n	600m†	5.0	12	.70	3.0				0	7	A214	ML8r
25	AM9140EPC	4096	1	S	MNX	200n	320n	578m	0.0	5.0	.80	2.0	3.2m	.40		0	7	A486	DL☑
26	L2141-4	4096	1	S	MNX	200n			0.0	5.0		§							
27	M4200-USC	4096	1	S	MNX	200n	350n	750m	5.0	12	.70	2.4§	2.0m	.50		3	8	A284	DL22h
28	M4200USC	4096	1	S	MNX	200n	200n$	750m	0.0	12	0.7	2.4§				3	8	A284a	DL22ak
29	uPD410D-2	4096	1	S	MNX	200n	440n	1.0 ☑	5.0	12	.60	2.4§	3.2m	.40		0	7	A443	DL22r
30	uPD410D#	4096	1	S	MNX	200n	440n	1.0 ☑	5.0	12	.60	2.4	3.2m	.40		0	7	A443	DL22r
31	uPD4104C-2#	4096	1	S	MNX	200n	310n	1.0 ☑	0.0	5.0	.80	2.2	70u△	5.5		0	7	A443b	DL18bj
32	uPD4104D-2#	4096	1	S	MNX	200n	310n	1.0 ☑	0.0	5.0	.80	2.2	10u△	5.5		0	7	A443b	DL18bb
33	4200	4096	1	S	MNX	215n	400n	650m	5.0	12	.70	2.4	2.0m	.50		0	7	A284	ML8r
34	4200UMC	4096	1	S	MNX	250n	400n	750m	5.0	12	.70	2.4§	2.0m	.50		5	C	A284b	DL22h
35	AM91L40DPC	4096	1	S	MNX	250n	395n	368m	0.0	5.0	.80	2.0	3.2m	.40		0	7	A468	DL☑
36	AM9140DPC	4096	1	S	MNX	250n	395n	578m	0.0	5.0	.80	2.0	3.2m	.40		0	7	A486	DL☑
37	L2141-5	4096	1	S	MNX	250n			0.0	5.0		§							
38	M4200-UMC	4096	1	S	MNX	250n	400n	750m	5.0	12	.70	2.4§	2.0m	.50		5	C	A284	DL22h
39	uPD4104C-1#	4096	1	S	MNX	250n	385n	1.0 ☑	0.0	5.0	.80	2.2	10u△	5.5		0	7	A443b	DL18bj
40	uPD4104D-1#	4096	1	S	MNX	250n	385n	1.0 ☑	0.0	5.0	.80	2.2	10u△	5.5		0	7	A443b	DL18bb
41	AM91L40CPC	4096	1	S	MNX	300n	470n	368m	0.0	5.0	.80	2.0	3.2m	.40		0	7	A468	DL☑
42	AM9140CPC	4096	1	S	MNX	300n	470n	578m	0.0	5.0	.80	2.0	3.2m	.40		0	7	A486	DL☑
43	uPD4104C#	4096	1	S	MNX	300n	460n	1.0 ☑	0.0	5.0	.80	2.2	10u△	5.5		0	7	A443b	DL18bj
44	4801C	4096	1	S	MNX	350n	350n	500m	0.0	5.0	.80	2.4§	2.0m	.50		0	7	A286	ML210b
45	4801B	4096	1	S	MNX	400n	400n	500m	0.0	5.0	.80	2.4§	2.0m	.50		0	7	A286	ML210b
46	4801BCC	4096	1	S	MNX	400n	400n	1.6 ☑	0.0	5.0	.80	2.4§	2.0m	.40		0	7	A286	ML119
47	AM91L40BPC	4096	1	S	MNX	400n	620n	368m	0.0	5.0	.80	2.0	3.2m	.40		0	7	A468	DL☑
48	AM9140BPC	4096	1	S	MNX	400n	620n	578m	0.0	5.0	.80	2.0	3.2m	.40		0	7	A486	DL☑
49	4044UCA	4096	1	S	MNX	450n	450n	495m	0.0	5.0	.80	2.0§	3.2m	.40		0	7	A378	DL☑
50	4044UCB	4096	1	S	MNX	450n	450n	495m	0.0	5.0	.80	2.0§	3.2m	.40		0	7	A378	DL☑
51	4044UCE	4096	1	S	MNX	450n	450n	475m	0.0	5.0	.80	2.0§	3.2m	.40		0	7	A378	DL18az
52	4801A	4096	1	S	MNX	450n	450n	500m	0.0	5.0	.80	2.4§	2.0m	.50		0	7	A286	ML210b
53	4801ACC	4096	1	S	MNX	450n	450n	1.6 ☑	0.0	5.0	.80	2.4§	2.0m	.40		0	7	A286	ML119
54	IM7141LCPN	4096	1	S	MNX	450n	450n	265m	0.0	5.0	.80	2.0	3.2m	.40		0	7	A418	DL18k
55	L4044UCA	4096	1	S	MNX	450n	450n	275m	0.0	5.0	.80	2.0§	3.2m	.40		0	7	A378	DL☑
56	L4044UCB	4096	1	S	MNX	450n	450n	275m	0.0	5.0	.80	2.0§	3.2m	.40		0	7	A378	DL☑
57	L4044UCE	4096	1	S	MNX	450n	450n	265m	0.0	5.0	.80	2.0§	3.2m	.40		0	7	A378	DL18az
58	AM91L40APC	4096	1	S	MNX	500n	770n	368m	0.0	5.0	.80	2.0	3.2m	.40		0	7	A468	DL☑
59	AM9140APC	4096	1	S	MNX	500n	770n	578m	0.0	5.0	.80	2.0	3.2m	.40		0	7	A486	DL☑
60	4801	4096	1	S	MNX	600n	600n	500m	0.0	5.0	.80	2.4§	2.0m	.50		0	7	A286	ML210b
61	4801UCC	4096	1	S	MNX	600n	600n	1.6 ☑	0.0	5.0	.80	2.4§	2.0m	.40		0	7	A286	ML119
62	AM21L47-45LC	4096	1	S	MXX	45n		1.2	0.0	5.0	0.8	2.0§	12m	0.4		0	7	A497	LL18h
63	2147H-3	4096	1	S	MXX	55n	55n	1.2 ☑	0.0	5.0	0.8	2.0§	50u△	4.5		0	7	A418	
64	2147H-4	4096	1	S	MXX	55n	55n	1.2 ☑	0.0	5.0	0.8	2.0§	50u△	4.5		0	7	A418	
65	C2147-3	4096	1	S	MXX	55n	55n	850m	0.0	5.0	.80	2.0§	8.0m	.40		1	8	A418	ML115c
66	IB2147HL3	4096	1	S	MXX	55n	55n	1.2	0.0	5.0	0.8	2.0§	8.0m	0.4		2	8	A418	DL18cq
67	IP2147HL3	4096	1	S	MXX	55n	55n	1.2 ☑	0.0	5.0	.80	2.0§	8.0m	.40		0	7	A418	DL18bi
68	MP2147HL3	4096	1	S	MXX	55n	55n	1.2 ☑	0.0	5.0	.80	2.0§	8.0m	.40		0	7	A418	DL18bi
69	P2147-3	4096	1	S	MXX	55n	55n	850m	0.0	5.0	.80	2.0§	8.0m	.40		1	8	A418	DL18d
70	S2147-3	4096	1	S	MXX	55n	55n	900m	0.0	5.0	.80	2.1§	12m	.45		0	7	A418	DL☑
71	C2147	4096	1	S	MXX	70n	70n	750m	0.0	5.0	.80	2.0§	8.0m	.40		1	8	A418	ML115c
72	C2147L	4096	1	S	MXX	70n	70n	675m	0.0	5.0	.80	2.0§	8.0m	.40		1	8	A418	ML115c
73	IB2147HL	4096	1	S	MXX	70n	70n	1.2	0.0	5.0	0.8	2.0§	8.0m	0.4		2	8	A418	DL18cq
74	IP2147HL	4096	1	S	MXX	70n	70n	1.2 ☑	0.0	5.0	.80	2.0§	8.0m	.40		0	7	A418	DL18bi
75	MP2147HL	4096	1	S	MXX	70n	70n	1.2 ☑	0.0	5.0	.80	2.0§	8.0m	.40		0	7	A418	DL18bi
76	P2147	4096	1	S	MXX	70n	70n	750m	0.0	5.0	.80	2.0§	8.0m	.40		1	8	A418	DL18d
77	P2147L	4096	1	S	MXX	70n	70n	675m	0.0	5.0	.80	2.0§	8.0m	.40		1	8	A418	DL18d
78	S2147	4096	1	S	MXX	70n	70n	800m	0.0	5.0	.80	2.1§	12m	.45		0	7	A418	DL☑
79	S4017	4096	1	S	MXX	70n	70n	625m	0.0	5.0	.80	2.1§	12m	.45		0	7	A418	DL☑
80	2147-6	4096	1	S	MXX	85n	85n	1.2 ☑	0.0	5.0	0.8	2.0§	50u△	4.5		0	7	A418	
81	2141-2	4096	1	S	MXX	120n	120n	1.2 ☑	0.0	5.0	0.8	2.0§	10u△	4.5		0	7	A418	
82	C2141-2	4096	1	S	MXX	120n	120n	350m	0.0	5.0	.80	2.0§	4.0m	.40		0	7	A418	ML115c
83	D2141-2	4096	1	S	MXX	120n	120n	350m	0.0	5.0	.80	2.0§	4.0m	.40		0	7	A418	DL18bh
84	IB2141-2	4096	1	S	MXX	120n	120n	1.2	0.0	5.0	0.8	2.0§	8.0m	0.4		2	8	A418	DL18cq
85	IC2141-2	4096	1	S	MXX	120n	120n	1.2 ☑	0.0	5.0	.80	2.0§	8.0m	.40		0	7	A418	DL18da
86	ID2141-2	4096	1	S	MXX	120n	120n	1.2 ☑	0.0	5.0	.80	2.0§	8.0m	.40		0	7	A418	DL18bh
87	IP2141-2	4096	1	S	MXX	120n	120n	1.2 ☑	0.0	5.0	.80	2.0§	8.0m	.40		0	7	A418	DL18bi
88	MP2141-2	4096	1	S	MXX	120n	120n	1.2 ☑	0.0	5.0	.80	2.0§	8.0m	.40		0	7	A418	DL18bi
89	2141-3	4096	1	S	MXX	150n	150n	1.2 ☑	0.0	5.0	0.8	2.0§	10u△	4.5		0	7	A418	
90	2141L-3	4096	1	S	MXX	150n	150n	1.2 ☑	0.0	5.0	0.8	2.0§	10u△	4.5		0	7	A418	
91	C2141-3	4096	1	S	MXX	150n	150n	350m	0.0	5.0	.80	2.0§	4.0m	.40		0	7	A418	ML115c
92	C2141L-3	4096	1	S	MXX	150n	150n	200m	0.0	5.0	.80	2.0§	4.0m	.40		0	7	A418	ML115c
93	D2141-3	4096	1	S	MXX	150n	150n	350m	0.0	5.0	.80	2.0§	4.0m	.40		0	7	A418	DL18bh
94	D2141L-3	4096	1	S	MXX	150n	150n	200m	0.0	5.0	.80	2.0§	4.0m	.40		0	7	A418	DL18bh
95	IB2141-3	4096	1	S	MXX	150n	150n	1.2	0.0	5.0	0.8	2.0§	8.0m	0.4		2	8	A418	DL18cq
96	IB2141L3	4096	1	S	MXX	150n	150n	1.2	0.0	5.0	0.8	2.0§	8.0m	0.4		2	8	A418	DL18cq
97	IC2141-3	4096	1	S	MXX	150n	150n	1.2 ☑	0.0	5.0	.80	2.0§	8.0m	.40		0	7	A418	DL18da
98	IC2141L3	4096	1	S	MXX	150n	150n	1.2 ☑	0.0	5.0	.80	2.0§	8.0m	.40		0	7	A418	DL18da
99	ID2141-3	4096	1	S	MXX	150n	150n	1.2 ☑	0.0	5.0	.80	2.0§	8.0m	.40		0	7	A418	DL18bh
100	ID2141L3	4096	1	S	MXX	150n	150n	1.2 ☑	0.0	5.0	.80	2.0§	8.0m	.40		0	7	A418	DL18bh
101	IP2141-3	4096	1	S	MXX	150n	150n	1.2 ☑	0.0	5.0	.80	2.0§	8.0m	.40		0	7	A418	DL18bi
102	IP2141L3	4096	1	S	MXX	150n	150n	1.2 ☑	0.0	5.0	.80	2.0§	8.0m	.40		0	7	A418	DL18bi
103	MD2141-3	4096	1	S	MXX	150n	150n	1.2 ☑	0.0	5.0	.80	2.0§	8.0m	.40		0	7	A418	DL18bh
104	MP2141-3	4096	1	S	MXX	150n	150n	1.2 ☑	0.0	5.0	.80	2.0§	8.0m	.40		0	7	A418	DL18bi
105	MP2141L3	4096	1	S	MXX	150n	150n	1.2 ☑	0.0	5.0	.80	2.0§	8.0m	.40		0	7	A418	DL18bi
106	2141-4	4096	1	S	MXX	200n	200n	1.2 ☑	0.0	5.0	0.8	2.0§	10u△	4.5		0	7	A418	
107	2141L-4	4096	1	S	MXX	200n	200n	1.2 ☑	0.0	5.0	0.8	2.0§	10u△	4.5		0	7	A418	
108	C2141-4	4096	1	S	MXX	200n	200n	275m	0.0	5.0	.80	2.0§	4.0m	.40		0	7	A418	ML115c
109	C2141L-4	4096	1	S	MXX	200n	200n	200m	0.0	5.0	.80	2.0§	4.0m	.40		0	7	A418	ML115c
110	D2141-4	4096	1	S	MXX	200n	200n	275m	0.0	5.0	.80	2.0§	4.0m	.40		0	7	A418	DL18bh

SYMBOLS AND CODES EXPLAINED IN INTERPRETER

2. READ-WRITE MEMORIES (RAMS)

IN ORDER OF (1)No.WORDS(2)No.BITS/WORD (3)MODE(4)STRUCT.(5)MAX ACC.TIME(6)TYPE No.

LINE No.	6 TYPE NUMBER	ORGANIZATION 1 NO. OF WORDS	2 BITS PER WORD	3 MODE	4 STRUC-TURE CODE	5 MAX. ACCESS TIME (S)	MAX. WRITE CYCLE TIME (S)	MAX. POWER DISS. (W)	POWER SUPPLY SPAN NEG. (V)	POS. (V)	INPUT LOGIC LEVELS MAX. '0' (V)	MIN. '1' (V)	MIN.OUTPUT SINK CURRENT (A)	@ OUT (V)	MIN. CLOCK FREQ. (Hz)	OPER TEMP RNGE CODE -	+	DRAWINGS FUNCTIONAL EQUIVALENT NUMBER	OUTLINE
1	D2141L-4	4096	1	S	MXX	200n	200n	200m	0.0	5.0	.80	2.0§	4.0m	.40		0	7	A418	DL18bh
2	IB2141-4	4096	1	S	MXX	200n	200n	1.2	0.0	5.0	0.8	2.0§	8.0m	0.4		2	8	A418	DL18cq
3	IB2141L4	4096	1	S	MXX	200n	200n	1.2	0.0	5.0	0.8	2.0§	8.0m	0.4		2	8	A418	DL18cq
4	IC2141-4	4096	1	S	MXX	200n	200n	1.2 ∅	0.0	5.0	.80	2.0§	8.0m	.40		0	7	A418	DL18da
5	ID2141-4	4096	1	S	MXX	200n	200n	1.2 ∅	0.0	5.0	.80	2.0§	8.0m	.40		0	7	A418	DL18bh
6	ID2141L4	4096	1	S	MXX	200n	200n	1.2 ∅	0.0	5.0	.80	2.0§	8.0m	.40		0	7	A418	DL18bh
7	IP2141-4	4096	1	S	MXX	200n	200n	1.2 ∅	0.0	5.0	.80	2.0§	8.0m	.40		0	7	A418	DL18bi
8	IP2141L4	4096	1	S	MXX	200n	200n	1.2 ∅	0.0	5.0	.80	2.0§	8.0m	.40		0	7	A418	DL18bi
9	MB2141-4	4096	1	S	MXX	200n	200n	1.2	0.0	5.0	0.8	2.0§	8.0m	0.4		5	C	A418	DL18cq
10	MD2141-4	4096	1	S	MXX	200n	200n	1.2 ∅	0.0	5.0	.80	2.0§	8.0m	.40		0	7	A418	DL18bh
11	MP2141-4	4096	1	S	MXX	200n	200n	1.2 ∅	0.0	5.0	.80	2.0§	8.0m	.40		0	7	A418	DL18bi
12	MP2141L4	4096	1	S	MXX	200n	200n	1.2 ∅	0.0	5.0	.80	2.0§	8.0m	.40		0	7	A418	DL18bi
13	2141-5	4096	1	S	MXX	250n	250n	1.2 ∅	0.0	5.0	0.8	2.0§	10uΔ	4.5		0	7	A418	
14	2141L-5	4096	1	S	MXX	250n	250n	1.2 ∅	0.0	5.0	0.8	2.0§	10uΔ	4.5		0	7	A418	
15	C2141-5	4096	1	S	MXX	250n	250n	275m	0.0	5.0	.80	2.0§	4.0m	.40		0	7	A418	ML115c
16	C2141L-5	4096	1	S	MXX	250n	250n	200m	0.0	5.0	.80	2.0§	4.0m	.40		0	7	A418	ML115c
17	D2141-5	4096	1	S	MXX	250n	250n	275m	0.0	5.0	.80	2.0§	4.0m	.40		0	7	A418	DL18bh
18	D2141L-5	4096	1	S	MXX	250n	250n	200m	0.0	5.0	.80	2.0§	4.0m	.40		0	7	A418	DL18bh
19	IB2141-5	4096	1	S	MXX	250n	250n	1.2	0.0	5.0	0.8	2.0§	8.0m	0.4		2	8	A418	DL18cq
20	IB2141L5	4096	1	S	MXX	250n	250n	1.2	0.0	5.0	0.8	2.0§	8.0m	0.4		2	8	A418	DL18cq
21	IC2141-5	4096	1	S	MXX	250n	250n	1.2 ∅	0.0	5.0	.80	2.0§	8.0m	.40		0	7	A418	DL18da
22	IC2141L5	4096	1	S	MXX	250n	250n	1.2 ∅	0.0	5.0	.80	2.0§	8.0m	.40		0	7	A418	DL18da
23	ID2141-5	4096	1	S	MXX	250n	250n	1.2 ∅	0.0	5.0	.80	2.0§	8.0m	.40		0	7	A418	DL18bh
24	ID2141L5	4096	1	S	MXX	250n	250n	1.2 ∅	0.0	5.0	.80	2.0§	8.0m	.40		0	7	A418	DL18bh
25	IP2141-5	4096	1	S	MXX	250n	250n	1.2 ∅	0.0	5.0	.80	2.0§	8.0m	.40		0	7	A418	DL18bi
26	IP2141L5	4096	1	S	MXX	250n	250n	1.2 ∅	0.0	5.0	.80	2.0§	8.0m	.40		0	7	A418	DL18bi
27	MB2141-5	4096	1	S	MXX	250n	250n	1.2	0.0	5.0	0.8	2.0§	8.0m	0.4		5	C	A418	DL18cq
28	MD2141-5	4096	1	S	MXX	250n	250n	1.2 ∅	0.0	5.0	.80	2.0§	8.0m	.40		0	7	A418	DL18bh
29	MP2141-5	4096	1	S	MXX	250n	250n	1.2 ∅	0.0	5.0	.80	2.0§	8.0m	.40		0	7	A418	DL18bi
30	MP2141L5	4096	1	S	MXX	250n	250n	1.2 ∅	0.0	5.0	.80	2.0§	8.0m	.40		0	7	A418	DL18bi
31	RAM88B#3	4096	2	S	BTX	180n	200n	6.6 †	5.0	5.0	.80	2.0	20m	.40		1	8	A58b	PL3a
32	RAM288B#3	4096	2	S	BTX	180n	155n	6.6 †	5.0	5.0	.80	2.0	30m∅			1	8	A58c	PL3a
33	RAM388B#3	4096	2	S	BTX	300n	300n	6.6 †	5.0	5.0	.80	2.0	30m∅			1	5	A58c	PL3a
34	S6504	4096	4		MCX	300n	420n	37m	4.7	5.2	0.8	2.0	2.0m	0.4		0	7		
35	TMS2168-4JL	4096	4	S	MNG	45n	45n		0	5		§				0	7	A632	DL20bc
36	TMS2169-4JL	4096	4	S	MNG	45n	45n		0	5		§				0	7	A631	DL20bc
37	TMS2169-4NL	4096	4	S	MNG	45n	45n		0	5		§				0	7	A631	DL20bd
38	TMS2168-5JL	4096	4	S	MNG	55n	55n		0	5		§				0	7	A632	DL20bc
39	TMS2169-5JL	4096	4	S	MNG	55n	55n		0	5		§				0	7	A631	DL20bc
40	TMS2169-5NL	4096	4	S	MNG	55n	55n		0	5		§				0	7	A631	DL20bd
41	TMS2168-7JL	4096	4	S	MNG	70n	70n		0	5		§				0	7	A632	DL20bc
42	TMS2169-7JL	4096	4	S	MNG	70n	70n		0	5		§				0	7	A631	DL20bc
43	TMS2169-7NL	4096	4	S	MNG	70n	70n		0	5		§				0	7	A631	DL20bd
44	MB8168-90Z#ai	4096	4	S	MNG	90n	90n	1.2 ∅	0.0	5.0	.80	2.2§	8.0m	.40		0	7	A576	DL20ar
45	ITT2168-45D	4096	4	S	MNX	45n	40n	1.0 ∅	0.0	5	0.8	2.0§	8m	.4		0	7	A595	DL20av
46	ITT2168-45N	4096	4	S	MNX	45n	40n	1.0 ∅	0.0	5	0.8	2.0§	8m	.4		0	7	A595	DL20aw
47	ITT2168-55D	4096	4	S	MNX	55n	50n	1.0 ∅	0.0	5	0.8	2.0§	8m	.4		0	7	A595	DL20av
48	ITT2168-55N	4096	4	S	MNX	55n	50n	1.0 ∅	0.0	5	0.8	2.0§	8m	.4		0	7	A595	DL20aw
49	ITT2168-70D	4096	4	S	MNX	70n	70n	1.0 ∅	0.0	5	0.8	2.0§	8m	.4		0	7	A595	DL20av
50	ITT2168-70N	4096	4	S	MNX	70n	70n	1.0 ∅	0.0	5	0.8	2.0§	8m	.4		0	7	A595	DL20aw
51	9010-1200	4096	8		MNX	250n		11	24	24						0	6		
52	9010-1230	4096	8		MNX	250n		8.8	24	24						0	6		
53	25C03	4096	8	D	HNC	150n	275n	25	6.0	10	.80†	2.0	15m#	5.0	167kΔ	1	5		PL5
54	30C67	4096	8	D	HNC	220n	350n	25	6.0	10	.80†	2.0	15m#	5.0	167kΔ	1	5		PL5
55	85500311	4096	8	D	MXX	450n	950n	500u†	0.0	19	.40	2.0	11m#	.40		0	5		PL2a
56	IM855003	4096	8	D	MXX	450n	950n	500u†	0.0	19	.40	2.0	11m#	.40		0	5		PL2a
57	Z6132-3DS	4096	8	P	MNG	200n	350n	250m	0.0	5.0	.80	2.2	3.5m	.40	2.0m	0	7	A502	DL28w
58	Z6132-4DS	4096	8	P	MNG	250n	375n	250m	0.0	5.0	.80	2.2	3.5m	.40	2.0m	0	7	A502	DL28w
59	Z6132-5DS	4096	8	P	MNG	300n	425n	250m	0.0	5.0	.80	2.2	3.5m	.40	2.0m	0	7	A502	DL28w
60	Z6132-6CS	4096	8	P	MNG	350n	450n	250m	0.0	5.0	.80	2.2	3.5m	.40	2.0m	0	7	A502	DL16bn
61	Z6132-6DS	4096	8	P	MNG	350n	450n	250m	0.0	5.0	.80	2.2	3.5m	.40	2.0m	0	7	A502	DL28w
62	Z6132-6PS	4096	8	P	MNG	350n	450n	250m	0.0	5.0	.80	2.2	3.5m	.40	2.0m	0	7	A502	DL28h
63	Z6132-3CS	4096	8	S	MNG	200n	350n	200m	0.0	5.0	.80	2.0	10uΔ			0	7	A502	DL28o
64	Z6132-3PS	4096	8	S	MNG	200n	350n	200m	0.0	5.0	.80	2.0	10uΔ			0	7	A502	DL28h
65	Z6132-4CS	4096	8	S	MNG	250n	375n	200m	0.0	5.0	.80	2.0	10uΔ			0	7	A502	DL28o
66	Z6132-4PS	4096	8	S	MNG	250n	375n	200m	0.0	5.0	.80	2.0	10uΔ			0	7	A502	DL28h
67	Z6132-5CS	4096	8	S	MNG	300n	425n	200m	0.0	5.0	.80	2.0	10uΔ			0	7	A502	DL28o
68	Z6132-5PS	4096	8	S	MNG	300n	425n	200m	0.0	5.0	.80	2.0	10uΔ			0	7	A502	DL28h
69	25C06	4096	9	D	HNC	150n	275n	28	6.0	10	.80†	2.0	15m#	5.0	167kΔ	1	5		PL5
70	30C68	4096	9	D	HNC	220n	350n	27	6.0	10	.80†	2.0	15m#	5.0	167kΔ	1	5		PL5
71	85500411	4096	9	D	MXX	450n	950n	500u†	0.0	19	.40	2.0	11m#	.40		0	5		PL2a
72	IM855004	4096	9	D	MXX	450n	950n	500u†	0.0	19	.40	2.0	11m#	.40		0	5		PL2a
73	811-02	4096	10	D	MXX	350n	500n	26	5.0	20	2.4	.40				0	6	A56	
74	25C08	4096	16	D	HNC	150n	275n	39	6.0	10	.80†	2.0	15m#	5.0	167kΔ	1	5		PL5
75	30C71	4096	16	D	HNC	220n	350n	39	6.0	10	.80†	2.0	15m#	5.0	167kΔ	1	5		PL5
76	811-03#1	4096	16	D	MXG	600n	800n	27	5.0	20			2.7	5.0		0	6	A57	
77	25C10	4096	18	D	HNC	150n	275n	43	6.0	10	.80†	2.0	15m#	5.0	167kΔ	1	5		PL5
78	30C90	4096	18	D	HNC	220n	350n	43	6.0	10	.80†	2.0	15m#	5.0	167kΔ	1	5		PL5
79	MB8216	8192	1	D	MNG	100n	200n	410m†	5.2	19	.80	10.4				0	7	A231	ML215
80	IM7008-10-6D	8192	1	D	MNG	150n	300n	400m†	5.0	12	.60	2.4	2.0m	.45	500 Δ	0	7	PN22h	ML241
81	TMS4108-15NL	8192	1	D	MNG	150n	375n	462m	0.0	15	.80	2.4§	50m∅			0	7	A424	DL16x
82	IM7008-11-6D	8192	1	D	MNG	200n	400n	400m†	5.0	12	.60	2.4	2.0m	.45	500 Δ	0	7	PN22h	ML241
83	TMS4108-20NL	8192	1	D	MNG	200n	375n	462m	0.0	15	.80	2.4§	50m∅			0	7	A424	DL16x
84	TMS4108-25NL	8192	1	D	MNG	250n	410n	462m	0.0	15	.80	2.4§	50m∅			0	7	A424	DL16x
85	2109-3	8192	1	D	MNX	200n	375 Δ	462m	5.0	12	0.8	2.4	10uΔ	5.5		0	7	A351	
86	C2108-2	8192	1	D	MNX	200n	350n	1.2 ∅	5.0	12	.80	2.4§	4.1m	.40	500 Δ	0	7	A295	DL16∅
87	C2109-3	8192	1	D	MNX	200n	375n	462m	5.0	12	.80	2.4§	4.2m	.40	500 Δ	0	7	A351	DL16ah
88	D2108-2	8192	1	D	MNX	200n	350n	1.2 ∅	5.0	12	.80	2.4§	4.1m	.40	500 Δ	0	7	A295	DL16dd
89	P2108-2	8192	1	D	MNX	200n	350n	1.2 ∅	5.0	12	.80	2.4§	4.1m	.40	500 Δ	0	7	A295	ML127v
90	2109-4	8192	1	D	MNX	250n	410 Δ	462m	5.0	12	0.8	2.4	10uΔ	5.5		0	7	A351	
91	C2109-4	8192	1	D	MNX	250n	410n	462m	5.0	12	.80	2.4§	4.2m	.40	500 Δ	0	7	A351	DL16ah
92	C2108-4	8192	1	D	MNX	300n	425n	1.2 ∅	5.0	12	.80	2.4§	4.1m	.40	500 Δ	0	7	A295	DL16∅
93	D2108-4	8192	1	D	MNX	300n	425n	1.2 ∅	5.0	12	.80	2.4§	4.1m	.40	500 Δ	0	7	A295	DL16dd
94	P2108-4	8192	1	D	MNX	300n	425n	1.2 ∅	5.0	12	.80	2.4§	4.1m	.40	500 Δ	0	7	A295	ML127v
95	RAM88B#2	8192	1	S	BTX	180n	200n	6.6 †	5.0	5.0	.80	2.0	20m	.40		1	8	A58b	PL3a
96	RAM288B#2	8192	1	S	BTX	180n	155n	6.6 †	5.0	5.0	.80	2.0	30m∅			1	8	A58c	PL3a
97	RAM388B#2	8192	1	S	BTX	300n	300n	6.6 †	5.0	5.0	.80	2.0	30m∅			1	5	A58c	PL3a
98	25C02	8192	8	D	HNC	150n	275n	39	6.0	10	.80†	2.0	15m#	5.0	167kΔ	1	5		PL5
99	30C82	8192	8	D	HNC	220n	350n	39	6.0	10	.80†	2.0	15m#	5.0	167kΔ	1	5		PL5
100	MCM6664A-12L#ai	8192	8	D	MNG	120n	250n	248m	0.0	5.0	.80	2.4§	4.0m	.40		0	7	A437	DL16ae
101	MCM6664A-12P#ai	8192	8	D	MNG	120n	250n	248m	0.0	5.0	.80	2.4§	4.0m	.40		0	7	A437	DL16ds
102	811-03#2	8192	8	D	MXG	600n	800n	27	5.0	20			2.7	5.0		0	6	A57	
103	IB2186	8192	8	D	MXX	200n	320n			5.0	0.8	2.0			2.0m			A582	DL28aw
104	IB2187	8192	8	D	MXX	200n	320n			5.0	0.8	2.0			2.0m			A582	DL28aw
105	IC2186#ai	8192	8	D	MXX	200n	320n		0.0	5.0	.80	2.0			2.0m			A582	DL28ax
106	IC2187#ai	8192	8	D	MXX	200n	320n		0.0	5.0	.80	2.0			2.0m			A582	DL28ax
107	ID2186#ai	8192	8	D	MXX	200n	320n		0.0	5.0	.80	2.0			2.0m			A582	DL28aw
108	IP2186#ai	8192	8	D	MXX	200n	320n		0.0	5.0	.80	2.0			2.0m			A582	DL28av

SYMBOLS AND CODES EXPLAINED IN INTERPRETER

2. READ-WRITE MEMORIES (RAMS)

IN ORDER OF (1)No.WORDS(2)No.BITS/WORD (3)MODE(4)STRUCT.(5)MAX ACC.TIME(6)TYPE No.

LINE No.	6 TYPE NUMBER	ORGANIZATION 1 NO. OF WORDS	2 BITS PER WORD	3 MODE	4 STRUCTURE CODE	5 MAX. ACCESS TIME (S)	MAX. WRITE CYCLE TIME (S)	MAX. POWER DISS. (W)	POWER SUPPLY SPAN NEG. (V)	POS. (V)	INPUT LOGIC LEVELS MAX. '0' (V)	MIN. '1' (V)	MIN.OUTPUT SINK CURRENT (A)	@ OUT (V)	MIN. CLOCK FREQ. (Hz)	OPER TEMP RNGE CODE -	+	DRAWINGS FUNCTIONAL EQUIVALENT NUMBER	OUTLINE
1	MB2186	8192	8	D	MXX	200n	320n			5.0	0.8	2.0			2.0m			A582	DL28aw
2	MD2186#ai	8192	8	D	MXX	200n	320n		0.0	5.0	.80	2.0			2.0m			A582	DL28aw
3	MP2186#ai	8192	8	D	MXX	200n	320n		0.0	5.0	.80	2.0			2.0m			A582	DL28av
4	MP2187#ai	8192	8	D	MXX	200n	320n		0.0	5.0	.80	2.0			2.0m			A582	DL28av
5	IB2186-25	8192	8	P	MXX	250n	425n	1.0	0.0	5.0	0.8	2.4	2.1m	0.6		1	8	A582	DL28aw
6	IB2187-25	8192	8	P	MXX	250n	425n	1.0	0.0	5.0	0.8	2.4	2.1m	0.6		1	8	A582	DL28aw
7	IB2187-30	8192	8	P	MXX	250n	425n	1.0	0.0	5.0	0.8	2.4	2.1m	0.6		1	8	A582	DL28aw
8	IB2187-35	8192	8	P	MXX	250n	425n	1.0	0.0	5.0	0.8	2.4	2.1m	0.6		1	8	A582	DL28aw
9	IC2186-25	8192	8	P	MXX	250n	425n	1.0	0.0	5.0	0.8	2.4	2.1m	0.6		1	8	A582	DL28ax
10	IC2187-25	8192	8	P	MXX	250n	425n	1.0	0.0	5.0	0.8	2.4	2.1m	0.6		1	8	A582	DL28ax
11	IP2186-25	8192	8	P	MXX	250n	450n	1.0	0.0	5.0	0.8	2.4	2.1m	0.6		1	8	A582	DL28av
12	IP2186-35	8192	8	P	MXX	250n	600n	1.0	0.0	5.0	0.8	2.4	2.1m	0.6		1	8	A582	DL28av
13	IP2187-25	8192	8	P	MXX	250n	425n	1.0	0.0	5.0	0.8	2.4	2.1m	0.6		1	8	A582	DL28av
14	IP2187-30	8192	8	P	MXX	250n	425n	1.0	0.0	5.0	0.8	2.4	2.1m	0.6		1	8	A582	DL28av
15	IP2187-35	8192	8	P	MXX	250n	425n	1.0	0.0	5.0	0.8	2.4	2.1m	0.6		1	8	A582	DL28av
16	IB2186-30	8192	8	P	MXX	300n	500n	1.0	0.0	5.0	0.8	2.4	2.1m	0.6		1	8	A582	DL28aw
17	IC2186-30	8192	8	P	MXX	300n	500n	1.0	0.0	5.0	0.8	2.4	2.1m	0.6		1	8	A582	DL28ax
18	IC2187-30	8192	8	P	MXX	300n	500n	1.0	0.0	5.0	0.8	2.4	2.1m	0.6		1	8	A582	DL28ax
19	IP2186-30	8192	8	P	MXX	300n	500n	1.0	0.0	5.0	0.8	2.4	2.1m	0.6		1	8	A582	DL28av
20	IB2186-35	8192	8	P	MXX	350n	600n	1.0	0.0	5.0	0.8	2.4	2.1m	0.6		1	8	A582	DL28aw
21	IC2186-35	8192	8	P	MXX	350n	600n	1.0	0.0	5.0	0.8	2.4	2.1m	0.6		1	8	A582	DL28ax
22	IC2187-35	8192	8	P	MXX	350n	600n	1.0	0.0	5.0	0.8	2.4	2.1m	0.6		1	8	A582	DL28ax
23	HM6564-9	8192	8	S	MCG			300M	0.0	5.0	.80	3.0				4	8		
24	EDH8808C85CC	8192	8	S	MCX	85n	55n$	2.0 ∅	0.0	5.0	0.8	2.2	2.1m	0.4		0	7	A641	DL28be
25	EDH8808-150J883B	8192	8	S	MNX	150n	150n	2.0	0.0	5.0	0.8	2.2§	4.0u△			5	8	A612	DL28bi
26	EDH8808-150J883C	8192	8	S	MNX	150n	150n	2.0	0.0	5.0	0.8	2.2§	4.0u△			5	8	A612	DL28bi
27	EDH8808-150PCHR	8192	8	S	MNX	150n	150n	2.0	0.0	5.0	0.8	2.2§	4.0u△			0	7	A612	DL28bi
28	25C05	8192	9	D	HNC	150n	275n	43	6.0	10	.80†	2.0	15m#	5.0	167k△	1	5		PL5
29	30C66	8192	9	D	HNC	220n	350n	43	6.0	10	.80†	2.0	15m#	5.0	167k△	1	5		PL5
30	25C07	8192	16	D	HNC	150n	275n	39	6.0	10	.80†	2.0	15m#	5.0	167k△	1	5		PL5
31	30C26	8192	16	D	HNC	220n	350n	39	6.0	10	.80†	2.0	15m#	5.0	167k△	1	5		PL5
32	25C09	8192	18	D	HNC	150n	275n	43	6.0	10	.80†	2.0	15m#	5.0	167k△	1	5		PL5
33	30C06	8192	18	D	HNC	220n	350n	43	6.0	10	.80†	2.0	15m#	5.0	167k△	1	5		PL5
34	MBM10480	16384	1		BEX	25n			5.0	0.0	-1.8	-.08				0	7	A594	DL20ar
35	MK4516E-10	16384	1	D		100n	220n△	150m	0.0	5.0	0.8	2.4	10u△			0	7	PN16gw	LL18c
36	MK4516E-12	16384	1	D		120n	250n△	150m	0.0	5.0	0.8	2.4	10u△			0	7	PN16gw	LL18c
37	MK4516E10#ai	16384	1	D		150n	320n	1.0 ∅	0.0	5.0	0.8	2.4	4.2m	0.4	2.0m	0	7	PN18da	LL18c
38	MK4516J-8	16384	1	D	MN∅	80n	185n	900m	0.0	5.0	.80	2.4	10u△	5.5		0	7	PN16gw	DL16es
39	MK4516N-8	16384	1	D	MN∅	80n	185n	900m	0.0	5.0	.80	2.4	10u△	5.5		0	7	PN16gw	DL16fd
40	MK4516J-10	16384	1	D	MN∅	100n	220n	900m	0.0	5.0	.80	2.4	10u△	5.5		0	7	PN16gw	DL16es
41	MK4516N-10	16384	1	D	MN∅	100n	220n	900m	0.0	5.0	.80	2.4	10u△	5.5		0	7	PN16gw	DL16fd
42	MCM6616L3	16384	1	D	MNG			1.0 ∅	5.0	12	0.8	2.4§				0	6	PN16j	DL16ae
43	MCM6616L4	16384	1	D	MNG			1.0 ∅	5.0	12	0.8	2.4§				0	6	PN16j	DL16ae
44	MCM6616L5	16384	1	D	MNG			1.0 ∅	5.0	12	0.8	2.4§				0	6	PN16j	DL16ae
45	MCM6616P3	16384	1	D	MNG			1.0 ∅	5.0	12	0.8	2.4§				0	6	PN16j	DL16ew
46	MCM6616P4	16384	1	D	MNG			1.0 ∅	5.0	12	0.8	2.4§				0	6	PN16j	DL16ew
47	MCM6616P5	16384	1	D	MNG			1.0 ∅	5.0	12	0.8	2.4§				0	6	PN16j	DL16ew
48	Z6116-2	16384	1	D	MNG∅		320n	462m	5.0	12	.80	2.4	10u△			0	7	A499	DL16ab
49	Z6116-3	16384	1	D	MNG∅		375n	462m	5.0	12	.80	2.4	10u△			0	7	A499	DL16ab
50	Z6116-4	16384	1	D	MNG∅		425n	462m	5.0	12	.80	2.4	10u△			0	7	A499	DL16ab
51	Z6116-5	16384	1	D	MNG∅		535n	462m	5.0	12	.80	2.4	10u△			0	7	A499	DL16ab
52	D2118-3	16384	1	D	MNG	100n	235n	150m	0.0	5.0	.80	2.4§	10u△	5.5		0	7	A435	DL16dq
53	HM4816	16384	1	D	MNG	100n	200n	1.0 ∅	0.0	5.0	.80	2.7	10u△	5.5	2.0n△	0	7	A512	DL16j
54	MCM4517-10C	16384	1	D	MNG	100n	225n	150m	0.0	5.0	.80	2.4§	10u△	5.5		0	7	A528	DL16bm
55	MCM4517-10P	16384	1	D	MNG	100n	225n	150m	0.0	5.0	.80	2.4§	10u△	5.5		0	7		DL16ds
56	NMC5295J-1	16384	1	D	MNG	100n	235n	200m	0.0	5.0	.80	2.4	4.2m	.40		0	7	A468	DL16bi
57	D2118-4	16384	1	D	MNG	120n	270n	150m	0.0	5.0	.80	2.4§	10u△	5.5		0	7	A435	DL16dq
58	MB8116Y	16384	1	D	MNG	120n	320n	462m	5.0	12	.80	2.4	4.2m	.40		0	7	A356	DL∅
59	MB8117-15P	16384	1	D	MNG	120n	270n	160m	0.0	5.0	.80	2.4§	4.2m	.40	2.0m	0	7	A554	DL16ft
60	MB8216E#ai	16384	1	D	MNG	120n	320n	462m	5.0	12	0.8	2.4§	4.2m	0.4	2.0m	0	7	A351	DL16h
61	MB8216EC	16384	1	D	MNG	120n	320n	462m	0.0	12	.80	2.4§	4.2m	.40	2.0m	0	7	A351	DL16g
62	MCM4516C	16384	1	D	MNG	120n			5.0	12					500 △	0	7	A356	DL16bm
63	MCM4516L	16384	1	D	MNG	120n			5.0	12					500 △	0	7	A356	DL16ai
64	MCM4517-12C	16384	1	D	MNG	120n	250n	150m	0.0	5.0	.80	2.4§	10u△	5.5		0	7	A528	
65	MK4116P-1	16384	1	D	MNG	130n	320n	462m	5.0	12	.40%	2.4	4.2m	.40		0	7	A356	DL16ab
66	MB8216N#ai	16384	1	D	MNG	140n	320n	462m	5.0	12	0.8	2.4§	4.2m	0.4	2.0m	0	7	A351	DL16h
67	2690-2F	16384	1	D	MNG	150n	375n	462m	5.0	12	.80	2.4§	4.2m	.40	500 △	0	7	A356	DL16cv
68	2690-2I	16384	1	D	MNG	150n	375n	462m	5.0	12	.80	2.4§	4.2m	.40	500 △	0	7	A356	DL16q
69	2690-2N	16384	1	D	MNG	150n	375n	462m	5.0	12	.80	2.4§	4.2m	.40	500 △	0	7	A356	DL16fm
70	C2117-2	16384	1	D	MNG	150n	320n	462m	5.0	12	.80	2.4§	4.2m	.40	500 △	0	7	A351	DL16ah
71	D2118-7	16384	1	D	MNG	150n	320n	150m	0.0	5.0	.80	2.4§	10u△	5.5		0	7	A435	DL16dq
72	ITT4116-2D	16384	1	D	MNG	150n	375n△	1.0 ∅	5.0	12	.80	2.4§	4.2m	.40	500 △	0	7	PN16k	DL16cr
73	ITT4116-2J	16384	1	D	MNG	150n	375n△	1.0 ∅	5.0	12	.80	2.4§	4.2m	.40	500 △	0	7	PN16k	DL16f
74	ITT4116-2N	16384	1	D	MNG	150n	320n△	1.0 ∅	5.0	12	.80	2.4§	3.2m	.40		0	7	PN16k	DL14w
75	KMS4116	16384	1	D	MNG	150n	375n△	462m	5	12		§							
76	M4116-2F1	16384	1	D	MNG	150n	320n	462m	5	12	.80	2.4	4.2m	.40	500	0	7	A356	
77	M4116P-2B1	16384	1	D	MNG	150n	320n	462m	5	12	.80	2.4	10u	0.0	500 △	0	7	A356	
78	M4116P-2D1	16384	1	D	MNG	150n	320n	462m	5.0	12	.80	2.4	10u	0.0	500 △	0	7	A299	
79	M4116P-2F1	16384	1	D	MNG	150n	320n	462m	5	12	.80	2.4	10u	0.0	500 △	0	7	A356	DL16ab
80	M58759K-15	16384	1	D	MNG	150n	375n	462m	5.0	12	.80	2.4§	4.2m	.40	500 △	0	7	A356	ML335
81	MB8117-15Z	16384	1	D	MNG	150n	320n	1.0	0.0	5.0	0.8	2.4§	4.2m	0.4		0	7	A554	DL16fu
82	MCM4117L15	16384	1	D	MNG	150n	375n	1.0	5.0	12	.80	2.4	10u△	5.5	500 △	0	7	A356	DL18ai
83	MCM4517-15C	16384	1	D	MNG	150n	300n	150m	0.0	5.0	.80	2.4§	10u△	5.5		0	7	A528	DL16bm
84	TMM416D-2	16384	1	D	MNG	150n	320n	462m	5.0	12	0.8	2.7	4.2m	.40		0	7	A445	DL16bm
85	TMS4116-15JDL	16384	1	D	MNG	150n	375n	462m	5.0	12	.80	2.4§	4.2m	.40	500 △	0	7	A445	DL16x
86	TMS4116-15JL	16384	1	D	MNG	150n	375n	462m	5.0	12	.80	2.4§	4.2m	.40	500 △	0	7	A445	ML127y
87	uPD416C3	16384	1	D	MNG	150n	45n$	1.0 ∅	5.0	12	.80	2.4	4.2m	.40	500 △	0	7	A360	DL16di
88	uPD416D3	16384	1	D	MNG	150n	45n$	1.0 ∅	5.0	12	.80	2.4	4.2m	.40	500 △	0	7	A360	DL16e
89	2690-3F	16384	1	D	MNG	200n	375n	462m	5.0	12	.80	2.4§	4.2m	.40	500 △	0	7	A356	DL16cv
90	2690-3I	16384	1	D	MNG	200n	375n	462m	5.0	12	.80	2.4§	4.2m	.40	500 △	0	7	A356	DL16q
91	2690-3N	16384	1	D	MNG	200n	375n	462m	5.0	12	.80	2.4§	4.2m	.40	500 △	0	7	A356	DL16fm
92	C2116-2	16384	1	D	MNG	200n	350n	900m	5.0	12	.80	2.4§	4.1m	.40	500 △	0	7	A351	DL16∅
93	C2117-3	16384	1	D	MNG	200n	375n	462m	5.0	12	.80	2.4§	4.2m	.40	500 △	0	7	A351	DL16ah
94	HM4716-3	16384	1	D	MNG	200n	375n	602m	5.0	12	.80	2.4	4.2m	.40	500 △	0	7	PN16k	DL16cd
95	HYB4116-A3	16384	1	D	MNG	200n	375n	1.0 ∅	5.0	12	.80	2.4§	4.2m	.40	500 △	0	7	A351	DL16ad
96	IM7116-3CDE	16384	1	D	MNG	200n	375n	600m	5.0	12	.80	2.4§	3.2m	.40	500 △	0	7	A351	DL16ab
97	IM7116A-3CDE	16384	1	D	MNG	200n	375n	600m	5.0	12	.80	2.4§	3.2m	.40	500 △	0	7	A351	DL16ab
98	ITT4116-3D	16384	1	D	MNG	200n	375n△	1.0 ∅	5.0	12	.80	2.4§	4.2m	.40	500 △	0	7	PN16k	DL16cr
99	ITT4116-3J	16384	1	D	MNG	200n	375n△	1.0 ∅	5.0	12	.80	2.4§	4.2m	.40	500 △	0	7	PN16k	DL16f
100	ITT4116-3N	16384	1	D	MNG	200n	375n△	1.0 ∅	5.0	12	.80	2.4§	3.2m	.40		0	7	PN16k	DL14w
101	M4116-3F1	16384	1	D	MNG	200n	375n	462m	5	12	.80	2.4	4.2m	.40	500	0	7	A356	
102	M4116P-3B1	16384	1	D	MNG	200n	375n	462m	5	12	.80	2.4	10u	0.0	500 △	0	7	A356	
103	M4116P-3D1	16384	1	D	MNG	200n	375n	462m	5.0	12	.80	2.4	10u	0.0	500 △	0	7	A299	
104	M4116P-3F1	16384	1	D	MNG	200n	375n	462m	5	12	.80	2.4	10u	0.0	500 △	0	7	A356	DL16ab
105	M58759K-20	16384	1	D	MNG	200n	375n	462m	5.0	12	.80	2.4§	4.2m	.40	500 △	0	7	A356	ML335
106	MCM4117L20	16384	1	D	MNG	200n	375n	1.0	5.0	12	.80	2.4	10u△	5.5	500 △	0	7	A356	DL18ai
107	MK4516E-20	16384	1	D	MNG	200n	410n	150m	0.0	5.0	.80	2.4	10u△	5.0		0	7	PN16il	LL18c

SYMBOLS AND CODES EXPLAINED IN INTERPRETER

2. READ-WRITE MEMORIES (RAMS)

IN ORDER OF (1)No.WORDS(2)No.BITS/WORD (3)MODE(4)STRUCT.(5)MAX ACC.TIME(6)TYPE No.

LINE No.	6 TYPE NUMBER	ORGANIZATION 1 NO. OF WORDS	2 BITS PER WORD	3 MODE	4 STRUCTURE CODE	5 MAX. ACCESS TIME (S)	MAX. WRITE CYCLE TIME (S)	MAX. POWER DISS. (W)	POWER SUPPLY SPAN NEG. (V)	POS. (V)	INPUT LOGIC LEVELS MAX. '0' (V)	MIN. '1' (V)	MIN.OUTPUT SINK CURRENT (A)	@ OUT (V)	MIN. CLOCK FREQ. (Hz)	OPER TEMP RNGE CODE -	+	DRAWINGS FUNCTIONAL EQUIVALENT NUMBER	OUTLINE
1	MK4516N-20	16384	1	D	MNG	200n	410n	150m	0.0	5.0	.80	2.4	10u△	5.0		0	7	PN16ho	
2	MKB4116E-93	16384	1	D	MNG	200n	375n	462m	0.0	12	.80	2.4	10u△	5.5		5	8	A356	LL18a
3	MKB4116F-93	16384	1	D	MNG	200n	375n	462m	0.0	12	.80	2.4	10u△	5.5		5	8	A356	FL73
4	MKB4116J-93	16384	1	D	MNG	200n	375n	462m	0.0	12	.80	2.4	10u△	5.5		5	8	A356	DL16dp
5	MKB4116P-93	16384	1	D	MNG	200n	375n	462m	0.0	12	.80	2.4	10u△	5.5		5	8	A356	DL16ab
6	MN4116	16384	1	D	MNG	200n		462m	0.0	5.0	.80	2.4				0	7	A356	DL16ab
7	TMM416D-3	16384	1	D	MNG	200n	375	462m	5.0	12	0.8	2.7	4.2m	.40		0	7	A445	DL16bm
8	TMS4116-20JDL	16384	1	D	MNG	200n	375n	462m	5.0	12	.80	2.4§	4.2m	.40	500 △	0	7	A445	DL16x
9	TMS4116-20JL	16384	1	D	MNG	200n	375n	462m	5.0	12	.80	2.4§	4.2m	.40	500 △	0	7	A445	ML127y
10	uPD416C2	16384	1	D	MNG	200n	55n$	1.0 ⊘	5.0	12	.80	2.4	4.2m	.40	500 △	0	7	A360	DL16di
11	uPD416D2	16384	1	D	MNG	200n	55n$	1.0 ⊘	5.0	12	.80	2.4	4.2m	.40	500 △	0	7	A360	DL16e
12	2690-4F	16384	1	D	MNG	250n	410n	462m	5.0	12	.80	2.4§	4.2m	.40	500 △	0	7	A356	DL16cv
13	2690-4I	16384	1	D	MNG	250n	410n	462m	5.0	12	.80	2.4§	4.2m	.40	500 △	0	7	A356	DL16q
14	2690-4N	16384	1	D	MNG	250n	410n	462m	5.0	12	.80	2.4§	4.2m	.40	500 △	0	7	A356	DL16fm
15	C2116	16384	1	D	MNG	250n	375n	900m	5.0	12	.80	2.4§	4.1m	.40	500 △	0	7	A351	DL16⊘
16	C2116-3	16384	1	D	MNG	250n	375n	1.2 ⊘	5.0	12	.80	2.4§	4.1m	.40	500 △	0	7	A351	DL16⊘
17	C2117-4	16384	1	D	MNG	250n	410n	462m	5.0	12	.80	2.4§	4.2m	.40	500 △	0	7	A351	DL16ah
18	HM4716-4	16384	1	D	MNG	250n	375n	602m	5.0	12	.80	2.4	4.2m	.40	500 △	0	7	PN16k	DL16cd
19	HYB4116-A4	16384	1	D	MNG	250n	410n	1.0 ⊘	5.0	12	.80	2.4§	4.2m	.40	500 △	0	7	A351	DL16e
20	HYB4116-P4	16384	1	D	MNG	250n	410n	1.0 ⊘	5.0	12	.80	2.4§	4.2m	.40	500 △	0	7	A351	DL16do
21	IM7116-4CDE	16384	1	D	MNG	250n	385n	600m	5.0	12	.80	2.4§	3.2m	.40	500 △	0	7	A351	DL16ab
22	IM7116A-4CDE	16384	1	D	MNG	250n	385n	600m	5.0	12	.80	2.4§	3.2m	.40	500 △	0	7	A351	DL16ab
23	ITT4116-4D	16384	1	D	MNG	250n	515n△	1.0 ⊘	5.0	12	.80	2.4§	4.2m	.40	500 △	0	7	PN16k	DL16cr
24	ITT4116-4J	16384	1	D	MNG	250n	515n△	1.0 ⊘	5.0	12	.80	2.4§	4.2m	.40	500 △	0	7	PN16k	DL16f
25	ITT4116-4N	16384	1	D	MNG	250n	425n△	1.0 ⊘	5.0	12	.80	2.4§	3.2m	.40		0	7	PN16k	DL14w
26	M5K4116P-4	16384	1	D	MNG	250n	410n	462m	5.0	12	.80	2.4§	4.2m	.40	500 △	0	7	A356	DL16do
27	M5K4116P4	16384	1	D	MNG	250n	410n	260m†	0.0	12						0	7		DL⊘
28	M5K4116S-4	16384	1	D	MNG	250n	410n	462m	5.0	12	.80	2.4§	4.2m	.40	500 △	0	7	A356	DL16ag
29	M5K4116S4	16384	1	D	MNG	250n	410n	260m†	0.0	12						0	7		DL⊘
30	M4116-4F1	16384	1	D	MNG	250n	410n	462m	5	12	.80	2.4	4.2m	.40	500	0	7	A356	
31	M4116P-4B1	16384	1	D	MNG	250n	425n	1.0	5	12	.80	2.4	10u	0.0	500 △	0	7	A356	
32	M4116P-4D1	16384	1	D	MNG	250n	425n	1.0	5.0	12	.80	2.4	10u	0.0	500 △	0	7	A299	
33	M4116P-4F1	16384	1	D	MNG	250n	425n	1.0	5	12	.80	2.4	10u	0.0	500 △	0	7	A356	DL16ab
34	M58759K-25	16384	1	D	MNG	250n	410n	462m	5.0	12	.80	2.4§	4.2m	.40	500 △	0	7	A356	ML335
35	MB8116N	16384	1	D	MNG	250n	515n△	462m	5.0	12	.80	2.4§	4.2m	.40	500 △	0	7	A351	DL16g
36	MCM4117L25	16384	1	D	MNG	250n	410n	1.0	5.0	12	.80	2.4	10u△	5.5	500 △	0	7	A356	DL18ai
37	MM5290N-055	16384	1	D	MNG	250n	515n	528m	5.0	12	.80	2.4	4.2	.40	500 △	0	5	A351	DL16bh
38	TMM416D-4	16384	1	D	MNG	250n	410n△	462m	5.0	12	0.8	2.7	4.2m	.40		0	7	A445	DL16bm
39	TMS4070-2JL	16384	1	D	MNG	250n	400n	600m†	5.0	12	.80	2.4§	4.0m	.40	500 △	0	6	A274	DL16x
40	TMS4116-25JDL	16384	1	D	MNG	250n	410n	425m	5.0	12	.80	2.4§	4.2m	.40	500 △	0	7	A445	DL16x
41	TMS4116-25JL	16384	1	D	MNG	250n	410n	462m	5.0	12	.80	2.4§	4.2m	.40	500 △	0	7	A445	ML127y
42	uPD416C1	16384	1	D	MNG	250n	75n$	1.0 ⊘	5.0	12	.80	2.4	4.2m	.40	500 △	0	7	A360	DL16di
43	uPD416D1	16384	1	D	MNG	250n	75n$	1.0 ⊘	5.0	12	.80	2.4	4.2m	.40	500 △	0	7	A360	DL16e
44	C2116-4	16384	1	D	MNG	300n	425n	900m	5.0	12	.80	2.4§	4.1m	.40	500 △	0	7	A351	DL16⊘
45	HYB4116-A5	16384	1	D	MNG	300n	500n	1.0 ⊘	5.0	12	.80	2.4§	4.2m	.40	500 △	0	7	A351	DL16e
46	M58759K-30	16384	1	D	MNG	300n	510n	462m	5.0	12	.80	2.4§	4.2m	.40	500 △	0	7	A356	ML335
47	M58759P-30	16384	1	D	MNG	300n	510n	462m	5.0	12	.80	2.4§	4.2m	.40	500 △	0	7	A356	DL16do
48	M58759S-30	16384	1	D	MNG	300n	510n	462m	5.0	12	.80	2.4§	4.2m	.40	500 △	0	7	A356	DL16ag
49	MCM4117L30	16384	1	D	MNG	300n	480n	1.0	5.0	12	.80	2.4	10u△	5.5	500 △	0	7	A356	DL18ai
50	TMS4070-1JL	16384	1	D	MNG	300n	450n	600m†	5.0	12	.80	2.4§	4.0m	.40	500 △	0	6	A274	DL16x
51	TMS4116-30JDH	16384	1	D	MNG	300n	560n	441m	5.0	12	0.8	2.4§	4.2m	0.4	2.0m	0	5	A299	DL16⊘
52	TMS4116-30NH	16384	1	D	MNG	300n	560n	441m	5.0	12	0.8	2.4§	4.2m	0.4	2.0m	0	5	A299	DL16⊘
53	TMS4070JL	16384	1	D	MNG	350n	500n	600m†	5.0	12	.80	2.4§	4.0m	.40	500 △	0	6	A274	DL16x
54	uPD416C-E	16384	1	D	MNG	350n	510n	421m	5.0	12	.40	2.4	4.2m	.40		0	7	A445	DL16fd
55	uPD416D-E	16384	1	D	MNG	350n	510n	421m	5.0	12	.40	2.4	4.2m	.40		0	7	A445	DL16fr
56	2117-2	16384	1	D	MNX	150n	320n△	462m	5.0	12	0.8	2.4§	10u△	5.5		0	7	A351	
57	D2117-2	16384	1	D	MNX	150n	320n	462m	5.0	12	.80	2.4§	4.2m	.40	500 △	1	8	A351	DL16dq
58	EF4116BC-15	16384	1	D	MNX	150n	375n	426m	5	12	0.8	2.4	4.2m	0.4		0	7	A356	DL16di
59	EF4116BJ-15	16384	1	D	MNX	150n	375n	426m	5	12	0.8	2.4	4.2m	0.4		0	7	A356	DL16di
60	MB8116HC	16384	1	D	MNX	150n	375n	462m	0.0	5.0	.80	2.4§	4.2m	.40		0	7	A351a	DL16g
61	MCM4116AC15	16384	1	D	MNX	150n	375n	462m	5.0	12	.80	2.4§	4.2m	.40	500 △	0	7	A356	DL16bm
62	MCM4116AL15	16384	1	D	MNX	150n	375n	462m	5.0	12	.80	2.4§	4.2m	.40	500 △	0	7	A356	DL16ai
63	MCM4116C15	16384	1	D	MNX	150n	375n	462m	5.0	12	.80	2.4§	4.2m	.40	500 △	0	7	A356	DL16bm
64	MCM4116L15	16384	1	D	MNX	150n	375n	462m	5.0	12	.80	2.4§	4.2m	.40	500 △	0	7	A356	DL16ai
65	P2117-2	16384	1	D	MNX	150n	320n	462m	5.0	12	.80	2.4§	4.2m	.40	500 △	1	8	A351	ML273
66	2117-3	16384	1	D	MNX	200n	375n△	462m	5.0	12	0.8	2.4§	10u△	5.5		0	7	A351	
67	D2117-3	16384	1	D	MNX	200n	375n	462m	5.0	12	.80	2.4§	4.2m	.40	500 △	1	8	A351	DL16dq
68	EF4116BC-20	16384	1	D	MNX	200n	375n	426m	5	12	0.8	2.4	4.2m	0.4		0	7	A356	DL16di
69	EF4116BJ-20	16384	1	D	MNX	200n	375n	426m	5	12	0.8	2.4	4.2m	0.4		0	7	A356	DL16di
70	M58759S	16384	1	D	MNX	200n	375n	462m	5.0	12	.80	2.4	4.2m	.40		0	7		
71	MB8116EC	16384	1	D	MNX	200n	375n	462m	0.0	5.0	.80	2.4§	4.2m	.40		0	7	A351a	DL16g
72	MCM4116AC20	16384	1	D	MNX	200n	375n	462m	5.0	12	.80	2.4§	4.2m	.40	500 △	0	7	A356	DL16bm
73	MCM4116AL20	16384	1	D	MNX	200n	375n	462m	5.0	12	.80	2.4§	4.2m	.40	500 △	0	7	A356	DL16ai
74	MCM4116C20	16384	1	D	MNX	200n	375n	462m	5.0	12	.80	2.4§	4.2m	.40	500 △	0	7	A356	DL16bm
75	MCM4116L20	16384	1	D	MNX	200n	375n	462m	5.0	12	.80	2.4§	4.2m	.40	500 △	0	7	A356	DL16ai
76	MCM6616L20	16384	1	D	MNX	200n	375n△	600m	5.0	12	.80	2.4§	4.2m	.40	500 △	0	7	A356	DL16c
77	MCM6616P20	16384	1	D	MNX	200n	375n△	600m	5.0	12	.80	2.4§	4.2m	.40	500 △	0	7	A356	DL16ew
78	P2117-3	16384	1	D	MNX	200n	375n	462m	5.0	12	.80	2.4§	4.2m	.40	500 △	1	8	A351	ML273
79	2117-4	16384	1	D	MNX	250n	410n△	462m	5.0	12	0.8	2.4§	10u△	5.5		0	7	A351	
80	D2117-4	16384	1	D	MNX	250n	410n	462m	5.0	12	.80	2.4§	4.2m	.40	500 △	1	8	A351	DL16dq
81	EF4116BC-25	16384	1	D	MNX	250n	410n	426m	5	12	0.8	2.4	4.2m	0.4		0	7	A356	DL16di
82	EF4116BJ-25	16384	1	D	MNX	250n	410n	426m	5	12	0.8	2.4	4.2m	0.4		0	7	A356	DL16di
83	MB8116NC	16384	1	D	MNX	250n	410n	462m	0.0	5.0	.80	2.4§	4.2m	.40		0	7	A351a	DL16g
84	MB8116NP	16384	1	D	MNX	250n	410n	462m	0.0	5.0	.80	2.4§	4.2m	.40		0	7	A351a	DL16ft
85	MB8116NZ	16384	1	D	MNX	250n	410n	462m	0.0	5.0	.80	2.4§	4.2m	.40		0	7	A351a	DL16fu
86	MCM4116AC25	16384	1	D	MNX	250n	410n	462m	5.0	12	.80	2.4§	4.2m	.40	500 △	0	7	A356	DL16bm
87	MCM4116AL25	16384	1	D	MNX	250n	410n	462m	5.0	12	.80	2.4§	4.2m	.40	500 △	0	7	A356	DL16ai
88	MCM4116C25	16384	1	D	MNX	250n	410n	462m	5.0	12	.80	2.4§	4.2m	.40	500 △	0	7	A356	DL16bm
89	MCM4116L25	16384	1	D	MNX	250n	410n	462m	5.0	12	.80	2.4§	4.2m	.40	500 △	0	7	A356	DL16ai
90	MCM6616L25	16384	1	D	MNX	250n	515n△	600m	5.0	12	.80	2.4§	4.2m	.40	500 △	0	7	A356	DL16c
91	MCM6616P25	16384	1	D	MNX	250n	515n△	600m	5.0	12	.80	2.4§	4.2m	.40	500 △	0	7	A356	DL16ew
92	P2117-4	16384	1	D	MNX	250n	410n	462m	5.0	12	.80	2.4§	4.2m	.40	500 △	1	8	A351	ML273
93	C2117-5	16384	1	D	MNX	300n	490n	462m	5.0	12	.80	2.4§	4.2m	.40	500 △	1	8	A351	DL16ah
94	D2117-5	16384	1	D	MNX	300n	490n	462m	5.0	12	.80	2.4§	4.2m	.40	500 △	1	8	A351	DL16cv
95	EF4116BC-30	16384	1	D	MNX	300n	480n	426m	5	12	0.8	2.4	4.2m	0.4		0	7	A356	DL16di
96	EF4116BJ-30	16384	1	D	MNX	300n	480n	426m	5	12	0.8	2.4	4.2m	0.4		0	7	A356	DL16di
97	MCM4116AC30	16384	1	D	MNX	300n	480n	462m	5.0	12	.80	2.4§	4.2m	.40	500 △	0	7	A356	DL16bm
98	MCM4116AL30	16384	1	D	MNX	300n	480n	462m	5.0	12	.80	2.4§	4.2m	.40	500 △	0	7	A356	DL16ai
99	MCM4116C30	16384	1	D	MNX	300n	480n	462m	5.0	12	.80	2.4§	4.2m	.40	500 △	0	7	A356	DL16bm
100	MCM4116L30	16384	1	D	MNX	300n	480n	462m	5.0	12	.80	2.4§	4.2m	.40	500 △	0	7	A356	DL16ai
101	MCM6616L30	16384	1	D	MNX	300n	660n△	600m	5.0	12	.80	2.4§	4.2m	.40	500 △	0	7	A356	DL16c
102	MCM6616P30	16384	1	D	MNX	300n	660n△	600m	5.0	12	.80	2.4§	4.2m	.40	500 △	0	7	A356	DL16ew
103	P2117-5	16384	1	D	MNX	300n	490n	462m	5.0	12	.80	2.4§	4.2m	.40	500 △	1	8	A351	ML273
104	2118-3	16384	1	D	MXX	100n	235n△	1.0 ⊘	0.0	5.0	.80	2.4§	4.2m	.40	500 △	0	7	A528	
105	IB2118-10	16384	1	D	MXX	100n	235n	1.0	0.0	5.0	0.8	2.4§	4.2m	0.4		2	8	A528	DL16ah
106	IP2118-10	16384	1	D	MXX	100n	235n	150m	0.0	5.0	.80	2.4§	4.2m	.40		0	7	A528	DL16dr
107	MC2118-10	16384	1	D	MXX	100n	235n	150m	0.0	5.0	.80	2.4§	4.2m	.40		0	7	A528	DL16ah
108	MD2118-10	16384	1	D	MXX	100n	235n	150m	0.0	5.0	.80	2.4§	4.2m	.40		0	7	A528	DL16dq
109	MP2118-10	16384	1	D	MXX	100n	235n	150m	0.0	5.0	.80	2.4§	4.2m	.40		0	7	A528	DL16dr
110	2118-4	16384	1	D	MXX	120n	270n△	1.0 ⊘	0.0	5.0	.80	2.4§	4.2m	.40	500 △	0	7	A528	

SYMBOLS AND CODES EXPLAINED IN INTERPRETER

2. READ-WRITE MEMORIES (RAMS)

IN ORDER OF (1)No.WORDS(2)No.BITS/WORD (3)MODE(4)STRUCT.(5)MAX ACC.TIME(6)TYPE No.

LINE No.	6 TYPE NUMBER	ORGANIZATION 1 NO. OF WORDS	2 BITS PER WORD	3 MODE	4 STRUC-TURE CODE	5 MAX. ACCESS TIME (S)	MAX. WRITE CYCLE TIME (S)	MAX. POWER DISS. (W)	POWER SUPPLY SPAN NEG. (V)	POS. (V)	INPUT LOGIC LEVELS MAX. '0' (V)	MIN. '1' (V)	MIN.OUTPUT SINK CURRENT (A)	@ OUT (V)	MIN. CLOCK FREQ. (Hz)	OPER TEMP RNGE CODE -	+	DRAWINGS FUNCTIONAL EQUIVALENT NUMBER	OUTLINE
1	IB2118-12	16384	1	D	MXX	120n	270n	1.0	0.0	5.0	0.8	2.4§	4.2m	0.4		2	8	A528	DL16ah
2	IC2118-12	16384	1	D	MXX	120n	270n	150m	0.0	5.0	.80	2.4§	4.2m	.40		0	7	A528	DL16ah
3	IP2118-12	16384	1	D	MXX	120n	270n	150m	0.0	5.0	.80	2.4§	4.2m	.40		0	7	A528	DL16dr
4	MC2118-12	16384	1	D	MXX	120n	270n	150m	0.0	5.0	.80	2.4§	4.2m	.40		0	7	A528	DL16ah
5	MD2118-12	16384	1	D	MXX	120n	270n	150m	0.0	5.0	.80	2.4§	4.2m	.40		0	7	A528	DL16dq
6	MP2118-12	16384	1	D	MXX	120n	270n	150m	0.0	5.0	.80	2.4§	4.2m	.40		0	7	A528	DL16dr
7	2118-7	16384	1	D	MXX	150n	320n△	1.0 ⊘	0.0	5.0	.80	2.4§	4.2m	.40	500 △	0	7	A528	
8	IB2118-15	16384	1	D	MXX	150n	320n	1.0	0.0	5.0	0.8	2.4§	4.2m	0.4		2	8	A528	DL16ah
9	IC2118-15	16384	1	D	MXX	150n	320n	150m	0.0	5.0	.80	2.4§	4.2m	.40		0	7	A528	DL16ah
10	IP2118-15	16384	1	D	MXX	150n	320n	150m	0.0	5.0	.80	2.4§	4.2m	.40		0	7	A528	DL16dr
11	MC2118-15	16384	1	D	MXX	150n	320n	150m	0.0	5.0	.80	2.4§	4.2m	.40		0	7	A528	DL16ah
12	MD2118-15	16384	1	D	MXX	150n	320n	150m	0.0	5.0	.80	2.4§	4.2m	.40		0	7	A528	DL16dq
13	MP2118-15	16384	1	D	MXX	150n	320n	150m	0.0	5.0	.80	2.4§	4.2m	.40		0	7	A528	DL16dr
14	TMS2167-4JL	16384	1	S	MNG	45n	45n	1.0 ⊘	0	5	.8	2.0§	8.0m	.4		0	7	A630	DL20bc
15	TMS2167-4NL	16384	1	S	MNG	45n	45n	1.0 ⊘	0	5	.8	2.0§	8.0m	.4		0	7	A630	DL20bd
16	TMS2167-5JL	16384	1	S	MNG	55n	55n	1.0 ⊘	0	5	.8	2.0§	8.0m	.4		0	7	A630	DL20bc
17	TMS2167-5NL	16384	1	S	MNG	55n	55n	1.0 ⊘	0	5	.8	2.0§	8.0m	.4		0	7	A630	DL20bd
18	MB8167	16384	1	S	MNG	70n	70n	1.2	0.0	5.0	0.8	2.0§	50u△			1	8	A548	DL20a
19	TMS2167-7JL	16384	1	S	MNG	70n	70n	1.0 ⊘	0	5	.8	2.0§	8.0m	.4		0	7	A630	DL20bc
20	ITT2167-45D	16384	1	S	MNX	45n	40n	1.0 ⊘	0.0	5	0.8	2.0§	16m	.4		0	7	A545	DL20av
21	ITT2167-45N	16384	1	S	MNX	45n	40n	1.0 ⊘	0.0	5	0.8	2.0§	16m	.4		0	7	A545	DL20aw
22	ITT2167-55D	16384	1	S	MNX	55n	50n	1.0 ⊘	0.0	5	0.8	2.0§	16m	.4		0	7	A545	DL20av
23	ITT2167-55N	16384	1	S	MNX	55n	50n	1.0 ⊘	0.0	5	0.8	2.0§	16m	.4		0	7	A545	DL20aw
24	MK4167P55#ai	16384	1	S	MNX	55n	55n	1.0 ⊘	0.0	5.0	0.8	2.0	8.0m	0.4		0	7	PN20az	DL20⊘
25	ITT2167-70D	16384	1	S	MNX	70n	55n	1.0 ⊘	0.0	5	0.8	2.0§	16m	.4		0	7	A545	DL20av
26	ITT2167-70N	16384	1	S	MNX	70n	55n	1.0 ⊘	0.0	5	0.8	2.0§	16m	.4		0	7	A545	DL20aw
27	MK4167P70	16384	1	S	MNX	70n		1.0 ⊘		5.0	0.80	2.0	8.0m	0.40		0	7	PN20az	DL20⊘
28	C2167-55	16384	1	S	MXX	55n	55n	1.2 ⊘	0.0	5.5	0.8	2.0	8.0m	0.4		0	6	A548	
29	IB2167-55	16384	1	S	MXX	55n	55n	1.2	0.0	5.0	0.8	2.0§	8.0m	0.4		2	8	A548	DL20as
30	IC2167-55#ai	16384	1	S	MXX	55n	55n	1.2 ⊘	0.0	5.0	.80	2.0§	8.0m	.40		0	7	A548	DL20at
31	ID2167-55#ai	16384	1	S	MXX	55n	55n	1.2 ⊘	0.0	5.0	.80	2.0§	8.0m	.40		0	7	A548	DL20i
32	IP2167-55	16384	1	S	MXX	55n	55n	1.2	0.0	5.0	0.8	2.0§	8.0m	0.4		2	8	A548	DL20as
33	IP2167-55#ai	16384	1	S	MXX	55n	55n	1.2 ⊘	0.0	5.0	.80	2.0§	8.0m	.40		0	7	A548	DL20as
34	MB2167-55	16384	1	S	MXX	55n	55n	1.2	0.0	5.0	0.8	2.0§	8.0m	0.4		5	C	A548	DL20as
35	MD2167-55#ai	16384	1	S	MXX	55n	55n	1.2 ⊘	0.0	5.0	.80	2.0§	8.0m	.40		0	7	A548	DL20i
36	MP2167-55#ai	16384	1	S	MXX	55n	55n	1.2 ⊘	0.0	5.0	.80	2.0§	8.0m	.40		0	7	A548	DL20as
37	C2167-70	16384	1	S	MXX	70n	70n	1.2 ⊘	0.0	5.5	0.8	2.0	8.0m	0.4		0	6	A548	
38	C2167L-70	16384	1	S	MXX	70n	70n	1.2 ⊘	0.0	5.5	0.8	2.0	8.0m	0.4		0	6	A548	
39	IB2167-70	16384	1	S	MXX	70n	70n	1.2	0.0	5.0	0.8	2.0§	8.0m	0.4		2	8	A548	DL20as
40	IB2167L70	16384	1	S	MXX	70n	70n	1.2	0.0	5.0	0.8	2.0§	8.0m	0.4		2	8	A548	DL20as
41	IC2167-70#ai	16384	1	S	MXX	70n	70n	1.2 ⊘	0.0	5.0	.80	2.0§	8.0m	.40		0	7	A548	DL20at
42	IC2167L70#ai	16384	1	S	MXX	70n	70n	1.2 ⊘	0.0	5.0	.80	2.0§	8.0m	.40		0	7	A548	DL20at
43	ID2167-70#ai	16384	1	S	MXX	70n	70n	1.2 ⊘	0.0	5.0	.80	2.0§	8.0m	.40		0	7	A548	DL20i
44	ID2167L70#ai	16384	1	S	MXX	70n	70n	1.2 ⊘	0.0	5.0	.80	2.0§	8.0m	.40		0	7	A548	DL20i
45	IP2167-70#ai	16384	1	S	MXX	70n	70n	1.2 ⊘	0.0	5.0	.80	2.0§	8.0m	.40		0	7	A548	DL20as
46	IP2167L70#ai	16384	1	S	MXX	70n	70n	1.2 ⊘	0.0	5.0	.80	2.0§	8.0m	.40		0	7	A548	DL20as
47	MB2167-70	16384	1	S	MXX	70n	70n	1.2	0.0	5.0	0.8	2.0§	8.0m	0.4		5	C	A548	DL20as
48	MB2167L70	16384	1	S	MXX	70n	70n	1.2	0.0	5.0	0.8	2.0§	8.0m	0.4		5	C	A548	DL20as
49	MD2167-70#ai	16384	1	S	MXX	70n	70n	1.2 ⊘	0.0	5.0	.80	2.0§	8.0m	.40		0	7	A548	DL20i
50	MD2167L70#ai	16384	1	S	MXX	70n	70n	1.2 ⊘	0.0	5.0	.80	2.0§	8.0m	.40		0	7	A548	DL20i
51	MP2167-70#ai	16384	1	S	MXX	70n	70n	1.2 ⊘	0.0	5.0	.80	2.0§	8.0m	.40		0	7	A548	DL20as
52	MP2167L70#ai	16384	1	S	MXX	70n	70n	1.2 ⊘	0.0	5.0	.80	2.0§	8.0m	.40		0	7	A548	DL20as
53	C2167-10	16384	1	S	MXX	100n	100n	1.2 ⊘	0.0	5.5	0.8	2.0	8.0m	0.4		0	6	A548	
54	IB2167-10	16384	1	S	MXX	100n	100n	1.2	0.0	5.0	0.8	2.0§	8.0m	0.4		2	8	A548	DL20as
55	IC2167-10#ai	16384	1	S	MXX	100n	100n	1.2 ⊘	0.0	5.0	.80	2.0§	8.0m	.40		0	7	A548	DL20at
56	ID2167-10#ai	16384	1	S	MXX	100n	100n	1.2 ⊘	0.0	5.0	.80	2.0§	8.0m	.40		0	7	A548	DL20i
57	IP2167-10#ai	16384	1	S	MXX	100n	100n	1.2 ⊘	0.0	5.0	.80	2.0§	8.0m	.40		0	7	A548	DL20as
58	MB2167-10	16384	1	S	MXX	100n	100n	1.2	0.0	5.0	0.8	2.0§	8.0m	0.4		5	C	A548	DL20as
59	MD2167-10#ai	16384	1	S	MXX	100n	100n	1.2 ⊘	0.0	5.0	.80	2.0§	8.0m	.40		0	7	A548	DL20i
60	MP2167-10#ai	16384	1	S	MXX	100n	100n	1.2 ⊘	0.0	5.0	.80	2.0§	8.0m	.40		0	7	A548	DL20as
61	TMS4416-25NL	16384	4	D	MNG	250n	410n	130m	0	5	.8	2.0§	4.2m	.4		0	7	A627	DL18du
62	25C01	16384	8	D	HNC	150n	275n	39	6.0	10	.80†	2.0	15m#	5.0	167k△	1	5		PL5
63	30C13	16384	8	D	HNC	220n	350n	39	6.0	10	.80†	2.0	15m#	5.0	167k△	1	5		PL5
64	25C04	16384	9	D	HNC	150n	275n	43	6.0	10	.80†	2.0	15m#	5.0	167k△	1	5		PL5
65	30C27	16384	9	D	HNC	220n	350n	43	6.0	10	.80†	2.0	15m#	5.0	167k△	1	5		PL5
66	MB8132HH	32768	1	D	MNG	120n	320n	250m†	2.5	7.0	.80	2.2	12m	.40	500 △	0	7	A412b	DL16h
67	MB8132HL	32768	1	D	MNG	120n	320n	250m†	2.5	7.0	.80	2.2	12m	.40	500 △	0	7	A412a	DL16h
68	MCM6632AP12	32768	1	D	MNG	120n	250n	1.0 ⊘	0.0	5	0.8	2.4	4.0m			0	7	A603	DL16ds
69	MCM6633AP12	32768	1	D	MNG	120n	120n	1.0 ⊘	0.0	5	0.8	2.4§	4m	0.4		0	7	A605	DL16ds
70	MB8132EH	32768	1	D	MNG	150n	320n	250m†	2.5	7.0	.80	2.2	12m	.40	500 △	0	7	A412b	DL16h
71	MB8132EL	32768	1	D	MNG	150n	320n	250m†	2.5	7.0	.80	2.2	12m	.40	500 △	0	7	A412a	DL16h
72	MCM4132L15	32768	1	D	MNG	150n	375n	1.0 ⊘	5.0	12	.80	2.4§	4.2m	.40	2.0m	0	7	A551	X08
73	MCM6630L15	32768	1	D	MNG	150n	300n	275m	0.0	5.0	.80	2.4§	10u△	5.5		0	7	A437	DL16ae
74	MCM6631L15	32768	1	D	MNG	150n	300n	275m	0.0	5.0	.80	2.4§	10u△	5.5		0	7	A437	DL16ae
75	MCM6632-15L	32768	1	D	MNG	150n	300n	275m	0.0	5.0	.80	2.4§	4.0m	.40	2.0m	0	7	A437	DL18bx
76	MCM6632AL15	32768	1	D	MNG	150n	270n	1.0 ⊘	0.0	5	0.8	2.4	4.0m			0	7	A603	DL16gu
77	MCM6633AL15	32768	1	D	MNG	150n	150n	1.0 ⊘	0.0	5	0.8	2.4§	4m	0.4		0	7	A605	DL16gw
78	MCM6633L15	32768	1	D	MNG	150n	300n	275m	0.0	5.0	.80	2.4§	10u△	5.5		0	7	A437	DL16ae
79	MCM66320AL15	32768	1	D	MNG	150n	270n	1.0 ⊘	0.0	5	0.8	2.4	4.0m			0	7	A603	DL16gu
80	MCM66321AL15	32768	1	D	MNG	150n	270n	1.0 ⊘	0.0	5	0.8	2.4	4.0m	0.4		0	7	A603	DL16gu
81	MCM66330AL15	32768	1	D	MNG	150n	150n	1.0 ⊘	0.0	5	0.8	2.4§	4m	0.4		0	7	A605	DL16gw
82	MCM66331AL15	32768	1	D	MNG	150n	150n	1.0 ⊘	0.0	5	0.8	2.4§	4m	0.4		0	7	A605	DL16gw
83	TMS4132-15JDL	32768	1	D	MNG	150n	375n	380m†	5.0	12	.80	2.4§	4.2m	.40	500 △	0	7	A340a	DL18ag
84	MB8132NH	32768	1	D	MNG	200n	330n	250m†	2.5	7.0	.80	2.2	12m	.40	500 △	0	7	A412b	DL16h
85	MB8132NL	32768	1	D	MNG	200n	330n	250m†	2.5	7.0	.80	2.2	12m	.40	500 △	0	7	A412a	DL16h
86	MCM4132L20	32768	1	D	MNG	200n	375n	1.0 ⊘	5.0	12	.80	2.4§	4.2m	.40	2.0m	0	7	A551	X08
87	MCM6630L20	32768	1	D	MNG	200n	330n	275m	0.0	5.0	.80	2.4§	10u△	5.5		0	7	A437	DL16ae
88	MCM6631L20	32768	1	D	MNG	200n	330n	275m	0.0	5.0	.80	2.4§	10u△	5.5		0	7	A437	DL16ae
89	MCM6632-20L	32768	1	D	MNG	200n	350n	275m	0.0	5.0	.80	2.4§	4.0m	.40	2.0m	0	7	A437	DL18bx
90	MCM6632AL20	32768	1	D	MNG	200n	330n	1.0 ⊘	0.0	5	0.8	2.4	4.0m	0.4		0	7	A603	DL16gu
91	MCM6633AL20	32768	1	D	MNG	200n	200n	1.0 ⊘	0.0	5	0.8	2.4§	4m	0.4		0	7	A605	DL16gw
92	MCM6633L20	32768	1	D	MNG	200n	330n	275m	0.0	5.0	.80	2.4§	10u△	5.5		0	7	A437	DL16ae
93	MCM66320AL20	32768	1	D	MNG	200n	330n	1.0 ⊘	0.0	5	0.8	2.4	4.0m	0.4		0	7	A603	DL16gu
94	MCM66321AL20	32768	1	D	MNG	200n	330n	1.0 ⊘	0.0	5	0.8	2.4	4.0m	0.4		0	7	A603	DL16gu
95	MCM66330AL20	32768	1	D	MNG	200n	200n	1.0 ⊘	0.0	5	0.8	2.4§	4m	0.4		0	7	A605	DL16gw
96	MCM66331AL20	32768	1	D	MNG	200n	200n	1.0 ⊘	0.0	5	0.8	2.4§	4m	0.4		0	7	A605	DL16gw
97	TMS4132-20JDL	32768	1	D	MNG	200n	375n	380m†	5.0	12	.80	2.4§	4.2m	.40	500 △	0	7	A340a	DL18ag
98	MCM4132L25	32768	1	D	MNG	250n	410n	1.0 ⊘	5.0	12	.80	2.4§	4.2m	.40	2.0m	0	7	A551	X08
99	TMS4132-25JDL	32768	1	D	MNG	250n	410n	380m†	5.0	12	.80	2.4§	4.2m	.40	500 △	0	7	A340a	DL18ag
100	MCM4132L30	32768	1	D	MNG	300n	480n	1.0 ⊘	5.0	12	.80	2.4§	4.2m	.40	2.0m	0	7	A551	X08
101	EDH81H32-45c	32768	1	S		40n	20n$	2 ⊘	0.3	7.0	0.8	2.0	16m	0.4		0	7	A703	DL22bg
102	EDH81H32-55c	32768	1	S		50n	25n$	2 ⊘	0.3	7.0	0.8	2.0	16m	0.4		0	7	A703	DL22bg
103	M58764S-12	65536	1	D		120n	230n	200m	0.0	5.0	0.8	2.4§				0	6	A470	DL⊘
104	MK4164J-10	65536	1	D	MN⊘	100n	235n	300m	0.0	5.0	.80	2.4	10u△	5.5		0	7	PN16gx	DL16es
105	MK4164N-10	65536	1	D	MN⊘	100n	235n	300m	0.0	5.0	.80	2.4	10u△	5.5		0	7	PN16gx	DL16fd
106	MK4164J-12	65536	1	D	MN⊘	120n	265n	300m	0.0	5.0	.80	2.4	10u△	5.5		0	7	PN16gx	DL16es
107	MCM6664-15C	65536	1	D	MNG		300n△	275m	0.0	5.0	0.8	2.4§	10u△	5.5	2.0m△	0	6		DL16ae
108	MCM6664-15L	65536	1	D	MNG		300n△	275m	0.0	5.0	0.8	2.4§	10u△	5.5	2.0m△	0	6		DL16ae
109	MCM6664-20C	65536	1	D	MNG		330n△	275m	0.0	5.0	0.8	2.4§	10u△			0	6		DL16ex
110	MCM6664-20L	65536	1	D	MNG		330n△	275m	0.0	5.0	0.8	2.4§	10u△			0	6	A437	DL16ex

SYMBOLS AND CODES EXPLAINED IN INTERPRETER

2. READ-WRITE MEMORIES (RAMS)

IN ORDER OF (1)No.WORDS(2)No.BITS/WORD (3)MODE(4)STRUCT.(5)MAX ACC.TIME(6)TYPE No.

LINE No.	6 TYPE NUMBER	ORGANIZATION 1 NO. OF WORDS	2 BITS PER WORD	3 MODE	4 STRUC-TURE CODE	5 MAX. ACCESS TIME (S)	MAX. WRITE CYCLE TIME (S)	MAX. POWER DISS. (W)	POWER SUPPLY SPAN NEG. (V)	POS. (V)	INPUT LOGIC LEVELS MAX. '0' (V)	MIN. '1' (V)	MIN.OUTPUT SINK CURRENT (A)	@ OUT (V)	MIN. CLOCK FREQ. (Hz)	OPER TEMP RNGE CODE -	+	DRAWINGS FUNCTIONAL EQUIVALENT NUMBER	OUTLINE
1	MB8164H	65536	1	D	MNG	120n	320n	250m†	2.5	7.0	.80	2.4	12m	.40		0	7	A412	DL16h
2	TMS4164-12JDL	65536	1	D	MNG	120n	230n	125m	0	5	.8	2.4§	4.2m	.4		0	7	A628	DL16hf
3	ITT4164-15	65536	1	D	MNG	150n	150n	1.0	0.0	5	0.8	2.4§	4.2m	0.4		0	7	A424	DL16Ø
4	M58764S-15	65536	1	D	MNG	150n	260n	200m	0.0	5.0	0.8	2.4§				0	6	A470	DLØ
5	MB8264-15E	65536	1	D	MNG	150n	300n△	1.0	0.0	5.0	0.8	2.4§	-10u△		2.0m	0	7	PN16hd	DL16g
6	MCM6665-15L	65536	1	D	MNG	150n	300n	275m	0.0	5.0	.80	2.4§	10u△	5.5		0	7	A437	DL16ae
7	TMM4164C-3	65536	1	D	MNG	150n	320n	275m	0.0	5.0	.80	2.4	4.2m	.40		0	7	A418	DL16g
8	TMS4164-15JDL	65536	1	D	MNG	150n	280n	200m	0.0	5.0	.80	2.4§	4.2m	.40	4.0m△	0	7	A424	DL18ag
9	ITT4164-20	65536	1	D	MNG	200n	200n	1.0	0.0	5	0.8	2.4§	4.2m	0.4		0	7	A424	DL16Ø
10	M58764S20	65536	1	D	MNG	200n	330n	150m†	0.0	5.0						0	7		DLØ
11	MB8164E	65536	1	D	MNG	200n	320n	250m†	2.5	7.0	.80	2.4	12m	.40		0	7	A412	DL16h
12	MB8264-20N	65536	1	D	MNG	200n	375n△	1.0	0.0	5.0	0.8	2.4§	-10u△		2.0m	0	7	PN16hd	DL16g
13	MCM6665-20L	65536	1	D	MNG	200n	330n	275m	0.0	5.0	.80	2.4§	10u△	5.5		0	7	A437	DL16ae
14	TMM4164C-4	65536	1	D	MNG	200n	330n	275m	0.0	5.0	.80	2.4	4.2m	.40		0	7	A418	DL16g
15	TMS4164-20JDL	65536	1	D	MNG	200n	326n	125m†	0.0	5.0	.80	2.4§	10u△	5.5	4.0m△	0	7	A424	DL16x
16	uPD4164D2	65536	1	D	MNG	200n	375n	1.0 Ø	0.0	5.0	.80	2.4§	10u△	5.5		0	7	PN16he	DL16aj
17	MB8164N	65536	1	D	MNG	250n	330n	250m†	2.5	7.0	.80	2.4	12m	.40		0	7	A412	DL16h
18	MCM6665L25	65536	1	D	MNG	250n	450n	275m	0.0	5.0	.80	2.4§	4.0m	.40	2.0m	0	5	A437	DL18bx
19	MCM6665L25-5L	65536	1	D	MNG	250n	410n	275m	0.0	5.0	.80	2.4§	10u△	5.5		0	7	A437	DL16ae
20	TMS4164-25FPL	65536	1	D	MNG	250n	410n	125m	0	5	.8	2.4§	4.2m	.4		0	7	A628a	LL18g
21	TMS4164-25JDL	65536	1	D	MNG	250n	410n	200m	0.0	5.0	0.8	2.4§	4.2m	0.4	4.0m△	0	7	A424	DL16x
22	TMS4164-25NL	65536	1	D	MNG	250n	410n	200m	0.0	5.0	0.8	2.4§	4.2m	0.4	4.0m△	0	7	A424	DL16fb
23	2164-15	65536	1	D	MNX	150n	300n	1.0 Ø	0.0	5.0	.80	2.4	4.2m	.40	500 △	0	7	A5444	
24	C2164-15	65536	1	D	MNX	150n	300n	1.0 Ø	0.0	5.5	0.8	2.4	4.2m	0.4		0	6	A424	
25	IB2164-15	65536	1	D	MNX	150n	300n	1.0	0.0	5.0	0.8	2.4§	4.2m	0.4		2	8	A424	DL16ah
26	IC2164-15#ai	65536	1	D	MNX	150n	300n	1.0 Ø	0.0	5.0	.80	2.4§	4.2m	.40		0	7	A424	DL16ah
27	ID2164-15#ai	65536	1	D	MNX	150n	300n	1.0 Ø	0.0	5.0	.80	2.4§	4.2m	.40		0	7	A424	DL16dq
28	IP2164-15#ai	65536	1	D	MNX	150n	300n	1.0 Ø	0.0	5.0	.80	2.4§	4.2m	.40		0	7	A424	DL16dr
29	MB2164-15	65536	1	D	MNX	150n	300n	1.0	0.0	5.0	0.8	2.4§	4.2m	0.4		5	C	A424	DL16ah
30	MC2164-15#ai	65536	1	D	MNX	150n	300n	1.0 Ø	0.0	5.0	.80	2.4§	4.2m	.40		0	7	A424	DL16ah
31	MD2164-15#ai	65536	1	D	MNX	150n	300n	1.0 Ø	0.0	5.0	.80	2.4§	4.2m	.40		0	7	A424	DL16ah
32	MP2164-15#ai	65536	1	D	MNX	150n	300n	1.0 Ø	0.0	5.0	.80	2.4§	4.2m	.40		0	7	A424	DL16dr
33	TMS4161-15NL	65536	1	D	MNX	150n	45n$	1.0 Ø	1.0	6.0	0.80	2.4§	4.2m	0.40	4.0m△	0	7	A715	DL20Ø
34	TMS4164-15FPL	65536	1	D	MNX	150n	45n$	1.0 Ø	1.0	6.0	0.80	2.4§	4.2m	0.40	4.0m△	0	7	A628a	LL18g
35	2164-20	65536	1	D	MNX	200n	350n	1.0 Ø	0.0	5.0	.80	2.4	4.2m	.40	500 △	0	7	A5444	
36	IB2164-20	65536	1	D	MNX	200n	375n	1.0	0.0	5.0	0.8	2.4§	4.2m	0.4		2	8	A424	DL16ah
37	IC2164-20#ai	65536	1	D	MNX	200n	375n	1.0 Ø	0.0	5.0	.80	2.4§	4.2m	.40		0	7	A424	DL16ah
38	ID2164-20#ai	65536	1	D	MNX	200n	375n	1.0 Ø	0.0	5.0	.80	2.4§	4.2m	.40		0	7	A424	DL16dq
39	IP2164-20#ai	65536	1	D	MNX	200n	375n	1.0 Ø	0.0	5.0	.80	2.4§	4.2m	.40		0	7	A424	DL16dr
40	MB2164-20	65536	1	D	MNX	200n	375n	1.0'	0.0	5.0	0.8	2.4§	4.2m	0.4		5	C	A424	DL16ah
41	MC2164-20#ai	65536	1	D	MNX	200n	375n	1.0 Ø	0.0	5.0	.80	2.4§	4.2m	.40		0	7	A424	DL16ah
42	MD2164-20#ai	65536	1	D	MNX	200n	375n	1.0 Ø	0.0	5.0	.80	2.4§	4.2m	.40		0	7	A424	DL16dq
43	MP2164-20#ai	65536	1	D	MNX	200n	375n	1.0 Ø	0.0	5.0	.80	2.4§	4.2m	.40		0	7	A424	DL16dr
44	TMS4161-20NL	65536	1	D	MNX	200n	45n$	1.0 Ø	1.0	6.0	0.80	2.4§	4.2m	0.40	4.0m△	0	7	A715	DL20Ø
45	TMS4164-20FPL	65536	1	D	MNX	200n	55n$	1.0 Ø	1.0	6.0	0.80	2.4§	4.2m	0.40	4.0m△	0	7	A628a	LL18g
46	2164-25	65536	1	D	MNX	250n	430n	1.0 Ø	0.0	5.0	.80	2.4	4.2m	.40	500 △	0	7	A544	
47	C2164-25	65536	1	D	MNX	250n	430n	1.0 Ø	0.0	5.5	0.8	2.4	4.2m	0.4		0	6	A424	
48	IB2164-25	65536	1	D	MNX	250n	465n	1.0	0.0	5.0	0.8	2.4§	4.2m	0.4		2	8	A424	DL16ah
49	IC2164-25#ai	65536	1	D	MNX	250n	465n	1.0 Ø	0.0	5.0	.80	2.4§	4.2m	.40		0	7	A424	DL16ah
50	ID2164-25#ai	65536	1	D	MNX	250n	465n	1.0 Ø	0.0	5.0	.80	2.4§	4.2m	.40		0	7	A424	DL16dq
51	IP2164-25#ai	65536	1	D	MNX	250n	465n	1.0 Ø	0.0	5.0	.80	2.4§	4.2m	.40		0	7	A424	DL16dr
52	MB2164-25	65536	1	D	MNX	250n	465n	1.0	0.0	5.0	0.8	2.4§	4.2m	0.4		5	C	A424	DL16ah
53	MD2164-25#ai	65536	1	D	MNX	250n	465n	1.0 Ø	0.0	5.0	.80	2.4§	4.2m	.40		0	7	A424	DL16dq
54	MP2164-25#ai	65536	1	D	MNX	250n	465n	1.0 Ø	0.0	5.0	.80	2.4§	4.2m	.40		0	7	A424	DL16dr
55	C2164-20	65536	1	D	MNX	300n	350n	1.0 Ø	0.0	5.5	0.8	2.4	4.2m	0.4		0	6	A424	
56	TMS4464-10	65536	4	D	MXX	100n	200n	412m		5.0	0.80	2.4	4.2m	0.40	4.3M	0	7		

3. READ ONLY MEMORIES (ROMS)

IN ORDER OF (1)No.WDS(2)No.BITS/WD(3)OP.MODE PRG.CODE(4)STRUCT.(5)MAX ACC.TIME(6)TYPE No.

LINE No.	6 TYPE NUMBER	ORGANIZATION 1 NO. WORDS	2 BITS PER WORD	3 OP MODE PROG CODE	4 STRUC-TURE CODE	5 MAX. ACCESS TIME (S)	MAX. POWER DISS. (W)	POWER SUPPLY SPAN NEG. (V)	POS. (V)	INPUT LOGIC LEVELS MAX. '0' (V)	MIN. '1' (V)	MIN.OUTPUT SINK CURRENT (A)	@ OUT (V)	OPER TEMP RNGE CODE -	+	GENERAL DESCRIPTION	DRAWINGS FUNCTIONAL EQUIVALENT NUMBER	OUTLINE
1	NOM101C	1	1	SE	MPN			20	20					4	A	Non-Volatile	B116	CY9
2	NOM102C	1	2	SE	MPN			20	20					4	A	Non-Volatile	B117	CY10
3	NOM104C	1	4	SE	MPN			20	20					4	A	Non-Volatile	B118	DL14am
4	MS109	1	9	SE	TAX	70n		0.0	5.0					0	7	Pr Non-Vol		CY8
5	MS113	1	13	SE	TAX	70n		0.0	5.0					0	7	Pr Non-Vol		DL∅
6	MS116	1	16	SE	TAX	70n		0.0	5.0					0	7	Pr Non-Vol		DL∅
7	MS208	2	8	SE	TAX	70n		0.0	5.0					0	7	Pr Non-Vol		DL∅
8	MS204	4	2		BAX	50n	8.5m	0.0	5.0	1.4	.20			5	7	PR Non-Vol RMM	B141	CY7b
9	RM15	8	4		TAX	50n	8.5m	0.0	5.0	2.0	.80			0	7	PR Non-Vol RMM	B138	DL16k
10	NOM301C	8	8	S	MPN			20	0.0	-10%	-2.0			4	A	Non-Vol	B101	FL26
11	NOM401C	8	8	SE	MPN			20	20	4.0%	9.0			4	A	Non Vol	B101	DL24dh
12	MS115	15	1		TAX	50n	8.5m	0.0	5.0	1.4	.20			5	7	PR Non-Vol RMM	B140	DL16k
13	RM15Y	15	1		TAX	50n	8.5m	0.0	5.0	2.0	.80			0	7	PR Non-Vol RMM	B139	DL16k
14	RM32	15	1		TAX	50n	8.5m	0.0	5.0	2.0	.80			0	7	PR Non-Vol RMM	B137	DL16k
15	XC170	16	8	SC		45n	370m	0.0	5.0	.45%		20m	.45	0	7		B24	DL16eu
16	XC171	16	8	SC		45n	470m	0.0	5.0	.45%	2.5	16m	.45	0	7		B24	DL16eu
17	MCM4000L	16	8	SC	BDX	45n	365m	0.0	5.0	.45%	2.5	16m	.45	0	7		B24	DL16bp
18	MCM4000P	16	8	SC	BDX	45n	365m	0.0	5.0	.45%	2.5	12m	.80	5	C		B24	DL16ew
19	MCM4300L	16	8	SC	BDX	45n	365m	0.0	5.0	.45%	2.5	16m	.45	0	7		B24	DL16bp
20	MCM2801	16	16	SE	MNG	4		0.0	5.0	.80	4.0	1.0m	.50	0	7	EEROM	B509	DL14v
21	RM256A#5	16	16	SE	TAX	50n	8.5m	0.0	5.0	2.0	.80			5	7	PR Non-Vol RMM	PN40A	DL40a
22	RM256#1	16	16	SE	TAX	70n		0.0	5.0					0	7	Pr Non-Vol	PN40A	DL40a
23	TM188	32	8	SC		40n	1.2m	0.0	5.0	.80	2.0	20m		0	7	PROM	B132	DL16fp
24	6230-1F	32	8	SC	BTD	50n	625m	0.0	5.0	.80	2.0Δ	12m	.50	0	7	ROM	PN16bw	FL49
25	6230-1J	32	8	SC	BTD	50n	625m	0.0	5.0	.80	2.0Δ	12m	.50	0	7	ROM	PN16bw	DL16bi
26	6230-1N	32	8	SC	BTD	50n	625m	0.0	5.0	.80	2.0Δ	12m	.50	0	7	ROM	PN16bw	DL16dj
27	6231-1F	32	8	SC	BTD	50n	625m	0.0	5.0	.80	2.0§	12m	.50	0	7	ROM	PN16bw	FL49
28	6231-1J	32	8	SC	BTD	50n	625m♦	0.0	5.0	.80	2.0§	12m	.50	0	7	ROM	PN16bw	DL16bi
29	6231-1N	32	8	SC	BTD	50n	625m	0.0	5.0	.80	2.0§	12m	.50	0	7	ROM	PN16bw	DL16dj
30	5230-1F	32	8	SC	BTD	60n	625m	0.0	5.0	.80	2.0Δ	8.0m	.50	5	C	ROM	PN16bw	FL49
31	5230-1J	32	8	SC	BTD	60n	625m	0.0	5.0	8.0	2.0Δ	8.0m	.50	5	C	ROM	PN16bw	DL16bi
32	5230-1N	32	8	SC	BTD	60n	625m	0.0	5.0	.80	2.0Δ	8.0m	.50	5	C	ROM	PN16bw	DL16dj
33	5231-1F	32	8	SC	BTD	60n	625m	0.0	5.0	.80	2.0§	8.0m	.50	5	C	ROM	PN16bw	FL49
34	5231-1J	32	8	SC	BTD	60n	625m♦	0.0	5.0	8.0	2.0§	8.0m	.50	5	C	ROM	PN16bw	DL16bi
35	5231-1N	32	8	SC	BTD	60n	625m	0.0	5.0	.80	2.0§	8.0m	.50	5	C	ROM	PN16bw	DL16dj
36	DM5488N	32	8	SC	BTX	20n	240m†	0.0	5.0	.80	2.0	12m	.40	5	C		PN16bs	DL16bh
37	DM5488W	32	8	SC	BTX	20n	240m†	0.0	5.0	.80	2.0	12m	.40	5	C		PN16bs	FL39
38	DM7488W	32	8	SC	BTX	20n	240m†	0.0	5.0	.80	2.0	12m	.40	0	7		PN16bs	FL39
39	SN5488AN	32	8	SC	BTX	25n	285m†	0.0	5.0	.80	2.0	12m	.40	5	C		PN16bs	DL16ey
40	SN7488AW	32	8	SC	BTX	25n	285m†	0.0	5.0	.80	2.0	12m	.40	0	7		PN16bs	MO004AG
41	DM7598N	32	8	SC	BTX	30n	350m†	0.0	5.0	.80	2.0§	12m	.40	5	C		B154	DL16bh
42	DM5488J	32	8	SC	BTX	35n	400m	0.0	5.0	.80	2.0Δ	12m	.40	5	C		PN16bs	DL16cr
43	DM7488J	32	8	SC	BTX	35n	400m	0.0	5.0	.80	2.0Δ	12m	.40	0	7		PN16bs	DL16cr
44	DM7488N	32	8	SC	BTX	35n	400m	0.0	5.0	.80	2.0Δ	12m	.40	0	7		PN16bs	DL16bh
45	5230D	32	8	SC	BTX	50n	500m	0.0	5.0	.80	2.0	10m	.45	5	C		PN16bw	DL16v
46	5230J	32	8	SC	BTX	50n	500m	0.0	5.0	.80	2.0	10m	.45	5	C		PN16bw	DL16da
47	5230N	32	8	SC	BTX	50n	500m	0.0	5.0	.80	2.0	10m	.45	5	C		PN16bw	DL16da
48	5231D	32	8	SC	BTX	50n	625m	0.0	5.0	.80	2.0§	10m	.45	5	C		PN16bw	DL16v
49	5231J	32	8	SC	BTX	50n	625m	0.0	5.0	.80	2.0§	10m	.45	5	C		PN16bw	DL16da
50	5231N	32	8	SC	BTX	50n	625m	0.0	5.0	.80	2.0§	10m	.45	5	C		PN16bw	DL16da
51	6230-1D	32	8	SC	BTX	50n	500m♦	0.0	5.0	8.0	2.0Δ	16m	.50	0	7		B132	DL16v
52	6230D	32	8	SC	BTX	50n	500m	0.0	5.0	.80	2.0	16m	.45	0	7		PN16bw	DL16v
53	6230J	32	8	SC	BTX	50n	500m	0.0	5.0	.80	2.0	16m	.45	0	7		PN16bw	DL16da
54	6230N	32	8	SC	BTX	50n	500m	0.0	5.0	.80	2.0	16m	.45	0	7		PN16bw	DL16da
55	6231-1D	32	8	SC	BTX	50n	625m♦	0.0	5.0	8.0	2.0§	16m	.50	0	7		B132	DL16v
56	6231D	32	8	SC	BTX	50n	625m	0.0	5.0	.80	2.0§	16m	.45	0	7		PN16bw	DL16v
57	6231J	32	8	SC	BTX	50n	625m	0.0	5.0	.80	2.0§	16m	.45	0	7		PN16bw	DL16da
58	6231N	32	8	SC	BTX	50n	625m	0.0	5.0	.80	2.0§	16m	.45	0	7		PN16bw	DL16da
59	93434DC	32	8	SC	BTX	50n	400m	0.0	5.0	.85	1.6	10m	.45	0	7		B142	DL16ep
60	93434DM	32	8	SC	BTX	50n	400m	0.0	5.0	.80	1.4	10m	.40	5	C		B142	DL16ep
61	DM8598J	32	8	SC	BTX	50n	350m†	0.0	5.0	.80	2.0§	12m	.40	0	7		B154	DL16cr
62	DM8598N	32	8	SC	BTX	50n	350m†	0.0	5.0	.80	2.0§	12m	.40	0	7		B154	DL16bh
63	FJB93434	32	8	SC	BTX	50n	400m♦	0.0	5.0	.85	1.6	10m	.45	0	7		PN16br	ML4e
64	MCM4002L	32	8	SC	BTX	50n	500m	0.0	5.0	.45%	2.5	12m	.45	5	C		B60	DL16bp
65	MCM4002P	32	8	SC	BTX	50n	500m	0.0	5.0	.45%	2.5	12m	.45	0	7		B60	DL16ew
66	N7488R	32	8	SC	BTX	50n	400m	0.0	5.0	.40%		16m	.40	0	7		74-88	FL18
67	QRO256-1	32	8	SC	BTX	50n	400m	0.0	7.0	.80	2.0	10m	.40	5	C		PN16br	DL16au
68	QRO256-9	32	8	SC	BTX	50n	400m	0.0	7.0	.80	2.0	10m	.40	0	7		PN16br	DL16au
69	SN7488N	32	8	SC	BTX	50n	240m†	0.0	5.0	.80	2.0	12m	.40	0	7		PN16bs	DL16ey
70	5230-1D	32	8	SC	BTX	60n	500m♦	0.0	5.0	.80	2.0Δ	10m	.50	5	C		B132	DL16v
71	5231-1D	32	8	SC	BTX	60n	625m♦	0.0	5.0	.80	2.0§	10m	.50	5	C		B132	DL16v
72	DM7598J	32	8	SC	BTX	65n	350m†	0.0	5.0	.80	2.0§	12m	.40	5	C		B154	DL16cr
73	GXB10139F	32	8	SE	BEG	22n	580m†	5.2	0.0	-1.8*	-.81			3	8	PROM	B371	DL16gb
74	GXB10139N	32	8	SE	BEG	22n	580m†	5.2	0.0	-1.8*	-.81			3	8	PROM	B371	DL16ga
75	MC10139P	32	8	SE	BEX	17n	500m†	5.2	0.0	-1.4	-1.1			0	7		B23	DL24br
76	MCM10139F	32	8	SE	BEX	20n	754m	5.2	0.0	-4.2	-1.0	50m∅		0	7	PROM	B293	FL34
77	MCM10539F	32	8	SE	BEX	20n	754m	5.2	0.0	-4.2	-1.0	50m∅		5	C	PROM	B293	FL34
78	MCM10539L	32	8	SE	BEX	20n	754m	5.2	0.0	-4.2	-1.0	50m∅		5	C	PROM	B293	DL16bm
79	SN10139J	32	8	SE	BEX	20n	754m	5.2	0.0	-1.6	-.98			0	8	PROM	B193	DL16fh
80	SN10139JE	32	8	SE	BEX	20n	754m	5.2	0.0	-1.6	-.98			0	8	PROM	B193	DL24s
81	53S080F	32	8	SE	BTD	13n	325m†	0.0	5.0	.80	2.0Δ	16m	.50	5	C	PROM	PN16bw	FL49
82	53S081F	32	8	SE	BTD	13n	325m†	0.0	5.0	.80	2.0§	16m	.50	5	C	PROM	PN16bw	FL49
83	63S080F	32	8	SE	BTD	13n	325m†	0.0	5.0	.80	2.0Δ	16m	.45	0	7	PROM	PN16bw	FL49
84	63S081F	32	8	SE	BTD	13n	325m†	0.0	5.0	.80	2.0§	16m	.45	0	7	PROM	PN16bw	FL49
85	53LS080F	32	8	SE	BTD	24n	175m†	0.0	5.0	.80	2.0Δ	12m	.50	5	C	PROM	PN16bw	FL49
86	53LS080J	32	8	SE	BTD	24n	175m†	0.0	5.0	.80	2.0Δ	12m	.50	5	C	PROM	PN16bw	DL16bi
87	53LS080N	32	8	SE	BTD	24n	175m†	0.0	5.0	.80	2.0Δ	12m	.50	5	C	PROM	PN16bw	DL16dj
88	53LS081F	32	8	SE	BTD	24n	175m†	0.0	5.0	.80	2.0§	12m	.50	5	C	PROM	PN16bw	FL49
89	53LS081J	32	8	SE	BTD	24n	175m†	0.0	5.0	.80	2.0§	12m	.50	5	C	PROM	PN16bw	DL16bi
90	53LS081N	32	8	SE	BTD	24n	175m†	0.0	5.0	.80	2.0§	12m	.50	5	C	PROM	PN16bw	DL16dj
91	63LS080F	32	8	SE	BTD	24n	175m†	0.0	5.0	.80	2.0Δ	16m	.45	0	7	PROM	PN16bw	FL49
92	63LS080J	32	8	SE	BTD	24n	175m†	0.0	5.0	.80	2.0Δ	16m	.45	0	7	PROM	PN16bw	DL16bi
93	63LS080N	32	8	SE	BTD	24n	175m†	0.0	5.0	.80	2.0Δ	16m	.45	0	7	PROM	PN16bw	DL16dj
94	63LS081F	32	8	SE	BTD	24n	175m†	0.0	5.0	.80	2.0§	16m	.45	0	7	PROM	PN16bw	FL49
95	63LS081J	32	8	SE	BTD	24n	175m†	0.0	5.0	.80	2.0§	16m	.45	0	7	PROM	PN16bw	DL16bi
96	63LS081N	32	8	SE	BTD	24n	175m†	0.0	5.0	.80	2.0§	16m	.45	0	7	PROM	PN16bw	DL16dj
97	6330-1J	32	8	SE	BTD	50n	625m	0.0	5.0	.80	2.0Δ	12m	.50	0	7	PROM	PN16cp	DL16bi
98	6330-1N	32	8	SE	BTD	50n	625m	0.0	5.0	.80	2.0Δ	12m	.50	0	7	PROM	PN16cp	DL16dj
99	6331-1J	32	8	SE	BTD	50n	625m	0.0	5.0	.80	2.0§	12m	.50	0	7	PROM	PN16cp	DL16bi
100	6331-1N	32	8	SE	BTD	50n	625m	0.0	5.0	.80	2.0§	12m	.50	0	7	PROM	PN16cp	DL16dj
101	AM27S08DC	32	8	SE	BTD	50n	500n	0.0	5.0	.80	2.0	16m	.45	0	7	PROM	B175	DL16ct
102	AM27S08DM	32	8	SE	BTD	50n	500m	0.0	5.0	.80	2.0	16m	.45	5	C	PROM	B175	DL16ay
103	AM27S09DC	32	8	SE	BTD	50n	550m	0.0	5.0	.80	2.0§	16m	.45	0	7	PROM	B175	DL16ct
104	AM27S09DM	32	8	SE	BTD	50n	550m	0.0	5.0	.80	2.0§	16m	.45	5	C	PROM	B175	DL16ay
105	N82S23B	32	8	SE	BTD	50n	385m	0.0	5.0	.85	2.0Δ	16m	.45	0	7	PROM	B196	DL16fm
106	N82S123B	32	8	SE	BTD	50n	385m	0.0	5.0	.85	2.0§	16m	.45	0	7	PROM	B196	DL16fm
107	5330-1N	32	8	SE	BTD	60n	625m	0.0	5.0	.80	2.0Δ	8.0m	.50	5	C	PROM	PN16cp	DL16dj
108	5331-1N	32	8	SE	BTD	60n	625m	0.0	5.0	.80	2.0§	8.0m	.50	5	C	PROM	PN16cp	DL16dj
109	HM9-76LS03-5	32	8	SE	BTD	500n	125m	0.0	5.0	.80	2.0§	1.0m	.45	0	7	PROM	B156	FL54

SYMBOLS AND CODES EXPLAINED IN INTERPRETER

3. READ ONLY MEMORIES (ROMS)

IN ORDER OF (1)No.WDS(2)No.BITS/WD(3)OP.MODE PRG.CODE(4)STRUCT.(5)MAX ACC.TIME(6)TYPE No.

LINE No.	6 TYPE NUMBER	ORGANIZATION 1 NO. WORDS	2 BITS PER WORD	3 OP MODE PROG CODE	4 STRUC-TURE CODE	5 MAX. ACCESS TIME (S)	MAX. POWER DISS. (W)	POWER SUPPLY SPAN NEG. (V)	POS. (V)	INPUT LOGIC LEVELS MAX. '0' (V)	MIN. '1' (V)	MIN.OUTPUT SINK CURRENT (A)	@ OUT (V)	OPER TEMP RNGE CODE -	+	GENERAL DESCRIPTION	DRAWINGS FUNCTIONAL EQUIVALENT NUMBER	OUTLINE
1	SN74188J	32	8	SE	BTX	30n	410m†	0.0	5.0	.80	2.0	12m	.40	0	7	Field Program	PN16bs	DL16fh
2	SN74188N	32	8	SE	BTX	30n	410m†	0.0	5.0	.80	2.0	12m	.40	0	7	Field Program	PN16bs	DL16ey
3	DM7577J	32	8	SE	BTX	35n	550m	0.0	5.0	.80	2.0	12m	.40	5	C	Field Program	PN16cu	DL16cr
4	DM7577N	32	8	SE	BTX	35n	550m	0.0	5.0	.80	2.0	12m	.40	5	C	Field Program	PN16cu	DL16bh
5	DM7578J	32	8	SE	BTX	35n	550m	0.0	5.0	.80	2.0§	12m	.40	5	C	Field Program	PN16cu	DL16cr
6	DM7578N	32	8	SE	BTX	35n	550m	0.0	5.0	.80	2.0§	12m	.50	5	C	Field Program	PN16cu	DL16bh
7	DM8577J	32	8	SE	BTX	35n	550m	0.0	5.0	.80	2.0	12m	.40	0	7	Field Program	PN16cu	DL16cr
8	DM8577N	32	8	SE	BTX	35n	550m	0.0	5.0	.80	2.0Δ	12m	.40	0	7	Field Program	PN16cu	DL16bh
9	DM8578J	32	8	SE	BTX	35n	550m	0.0	5.0	.80	2.0§	12m	.40	0	7	Field Program	PN16cu	DL16cr
10	DM8578N	32	8	SE	BTX	35n	550m	0.0	5.0	.80	2.0§	12m	.40	0	7	Field Program	PN16cu	DL16bh
11	5330D	32	8	SE	BTX	50n	500m	0.0	5.0	.80	2.0	10m	.45	5	C		B132	DL16v
12	5330J	32	8	SE	BTX	50n	500m	0.0	5.0	.80	2.0	10m	.45	5	C		B132	DL16da
13	5331D	32	8	SE	BTX	50n	625m	0.0	5.0	.80	2.0§	10m	.45	5	C		B132	DL16v
14	5331J	32	8	SE	BTX	50n	625m	0.0	5.0	.80	2.0§	10m	.45	5	C		B132	DL16da
15	6330-1D	32	8	SE	BTX	50n	500m♦	0.0	5.0	.80	2.0Δ	16m	.50	0	7	Fld Prog	B132	DL16v
16	6330D	32	8	SE	BTX	50n	500m	0.0	5.0	.80	2.0	16m	.45	0	7		B132	DL16v
17	6330J	32	8	SE	BTX	50n	500m	0.0	5.0	.80	2.0	16m	.45	0	7		B132	DL16da
18	6331-1D	32	8	SE	BTX	50n	625m♦	0.0	5.0	.80	2.0§	16m	.50	0	7	Fld Prog	B132	DL16v
19	6331D	32	8	SE	BTX	50n	625m	0.0	5.0	.80	2.0§	16m	.45	0	7		B132	DL16v
20	6331J	32	8	SE	BTX	50n	625m	0.0	5.0	.80	2.0§	16m	.45	0	7		B132	DL16da
21	DM7577D	32	8	SE	BTX	50n	550m	0.0	5.0	.80	2.0	12m	.40	5	C	Field Program	PN16cu	DL16bg
22	DM7578D	32	8	SE	BTX	50n	550m	0.0	5.0	.80	2.0§	12m	.40	5	C	Field Program	PN16cu	DL16bg
23	DM8577D	32	8	SE	BTX	50n	550m	0.0	5.0	.80	2.0	12m	.40	0	7	Field Program	PN16cu	DL16bg
24	DM8578D	32	8	SE	BTX	50n	550m	0.0	5.0	.80	2.0§	12m	.40	0	7	Field Program	PN16cu	DL16bg
25	FLR121	32	8	SE	BTX	50n	500m	0.0	5.0	.80	2.0	20m	.40	0	7	PROM		
26	HPROM8256-2	32	8	SE	BTX	50n	500m	0.0	5.0	.90	2.0	10m	.40	5	C		B70	DL16au
27	HPROM8256-5	32	8	SE	BTX	50n	550m	0.0	5.0	.85	1.9	10m	.45	0	7		B70	DL16au
28	HPROM8256-8	32	8	SE	BTX	50n	500m†	0.0	5.0	.90	2.0	10m	.40	5	C		B70	DL16au
29	IM5600CDE	32	8	SE	BTX	50n	500m	0.0	5.0	.80	2.0Δ	40uΔ	5.5	0	7	PROM		DL16b
30	IM5600CFE	32	8	SE	BTX	50n	1.5m%	0.0	5.0	.80	2.0Δ	40uΔ	5.5	0	7	PROM		FL76
31	IM5600CJE	32	8	SE	BTX	50n	1.5m%	0.0	5.0	.80	2.0Δ	40uΔ	5.5	0	7	PROM	B1	DL16ej
32	IM5600CPE	32	8	SE	BTX	50n	500m	0.0	5.0	.80	2.0Δ	40uΔ	5.5	0	7	PROM	B1	DL16bn
33	IM5600MDE	32	8	SE	BTX	50n	500m	0.0	5.0	.80	2.0Δ	100uΔ	5.5	5	C	PROM	B1	DL16ak
34	IM5600MFE	32	8	SE	BTX	50n	500m	0.0	5.0	.80	2.0Δ	100uΔ	5.5	5	C	PROM	B1	DL16Ø
35	IM5600MJE	32	8	SE	BTX	50n	1.5m%	0.0	5.0	.80	2.0Δ	100uΔ	5.5	5	C	PROM	B1	DL16ej
36	IM5610CDE	32	8	SE	BTX	50n	500m	0.0	5.0	.80	2.0Ø	40uΔ	5.5	0	7	PROM	B1	DL16ak
37	IM5610CFE	32	8	SE	BTX	50n	1.5m%	0.0	5.0	.80	2.0Ø	40uΔ	5.5	0	7	PROM	B1	FL76
38	IM5610CJE	32	8	SE	BTX	50n	1.5m%	0.0	5.0	.80	2.0Ø	40uΔ	5.5	0	7	PROM	B1	DL16ej
39	IM5610CPE	32	8	SE	BTX	50n	500m	0.0	5.0	.80	2.0Ø	40uΔ	5.5	0	7	PROM	B1	DL16bn
40	IM5610MDE	32	8	SE	BTX	50n	500m	0.0	5.0	.80	2.0Ø	100uΔ	5.5	5	C	PROM		DL16b
41	IM5610MFE	32	8	SE	BTX	50n	500m	0.0	5.0	.80	2.0Ø	100uΔ	5.5	5	C	PROM	B1	FL76
42	IM5610MJE	32	8	SE	BTX	50n	1.5m%	0.0	5.0	.80	2.0Ø	100uΔ	5.5	5	C	PROM		DL16ej
43	MB7051	32	8	SE	BTX	50n	530m	0.0	5.0	.80	2.0§	16m	.45	0	7	PROM	B1	ML4k
44	MB7051C	32	8	SE	BTX	50n		0.0	5.0	.80	2.0§	16m	.45	0	7	PROM	B542	DL16go
45	MB7056	32	8	SE	BTX	50n	530m	0.0	5.0	.80	2.0Δ	16m	.45	0	7	PROM	B1	ML4k
46	MB7056C	32	8	SE	BTX	50n		0.0	5.0	.80	2.0Δ	16m	.45	0	7	PROM	B542	DL16go
47	MD6330	32	8	SE	BTX	50n	400m	0.0	5.0	.85	2.0	20m	.40	0	7		B53	ML55
48	MD6331	32	8	SE	BTX	50n	500m	0.0	5.0	.85	2.0§	20m	.45	0	7		B53	ML55
49	N8223B	32	8	SE	BTX	50n	400mØ	0.0	5.0	.80%	2.0	16m	.50	0	7		74-188	DL16bw
50	N8223E	32	8	SE	BTX	50n	400mØ	0.0	5.0	.80	2.0	9.6m	.40	0	7		74-88	ML61c
51	N8223F	32	8	SE	BTX	50n	400mØ	0.0	5.0	.80%	2.0	16m	.50	0	7		74-188	DL16ep
52	N8223W	32	8	SE	BTX	50n	400mØ	0.0	5.0	.80%	2.0	16m	.50	0	7		74-188	FL25
53	S8223B	32	8	SE	BTX	50n	400mØ	0.0	5.0	.80%	2.0	9.6m	.40	5	C		74-88	DL16bw
54	S8223E	32	8	SE	BTX	50n	400mØ	0.0	5.0	.40%		9.6m	.40	5	C		74-88	ML61c
55	S8223F	32	8	SE	BTX	50n	400mØ	0.0	5.0	.80%	2.0	9.6m	.40	5	C		74-88	DL16ep
56	S8223W	32	8	SE	BTX	50n	400mØ	0.0	5.0	.80%	2.0	9.6m	.40	5	C		74-88	FL25
57	5330-1D	32	8	SE	BTX	60n	500m♦	0.0	5.0	8.0	2.0Δ	10m	.50	5	C	Fld Prog	B132	DL16v
58	5331-1D	32	8	SE	BTX	60n	625m♦	0.0	5.0	8.0	2.0§	10m	.50	5	C	Fld Prog	B132	DL16v
59	MD5330	32	8	SE	BTX	60n	400m	0.0	5.0	.80	2.0	15m	.40	5	C		B53	ML55
60	MD5331	32	8	SE	BTX	60n	500m	0.0	5.0	.80	2.0§	15m	.40	5	C		B53	ML55
61	RC82S23F	32	8	SE	BTX	65n	425m	0.0	5.0	.80	2.0Δ	16m	.50	5	C	PROM	B196	DL16cv
62	RC82S23N	32	8	SE	BTX	65n	425m	0.0	5.0	.80	2.0Δ	16m	.50	5	C	PROM	74-188	DL16fm
63	RC82S123F	32	8	SE	BTX	65n	425m	0.0	5.0	.80	2.0§	16m	.50	5	C	PROM	B196	DL16cv
64	RC82S123N	32	8	SE	BTX	65n	425m	0.0	5.0	.80	2.0§	16m	.50	5	C	PROM	74-123	DL16fm
65	MSL8515A	32	8	SE	BTX	80n	500m	0.0	5.0	.80	2.0Δ	16m	.40			PROM	B281	DL16m
66	MSL8516A	32	8	SE	BTX	80n	500m	0.0	5.0	.80	2.0§	16m	.40			PROM	B281	DL16m
67	RM256A#4	32	8	SE	TAX	50n	8.5m	0.0	5.0	2.0	.80			5	7	PR Non-Vol RMM	PN40A	DL40a
68	RM256#5	32	8	SE	TAX	70n		0.0	5.0					0	7	Pr Non-Vol	PN40A	DL40a
69	NCR2051H	32	16	E	MNM	4.0u	350m	-30	5	.8	3.2§	1.6m	.6	5	C	EAROM	B237	DL28Ø
70	ER2050	32	16	SE	MPN	10u	238m	28	5.0	.80	3.5	1.5m	.80	0	7	Non-Vol EAROM	B237	DL28m
71	RC82S200I	48	8	SC	BTX	80n	900m	0.0	5.0	.80	2.0§	9.6m	.50	5	C	16 Input Var	Z24	DL28j
72	RC82S200N	48	8	SC	BTX	80n	900m		5.0	.80	2.0§	9.6m	.50	5	C	16 Input Var	Z24	DL28h
73	RC82S201I	48	8	SC	BTX	80n	900m	0.0	5.0	.80	2.0Δ	9.6m	.50	5	C	16 Input Var	Z24	DL28j
74	RC82S201N	48	8	SC	BTX	80n	900m	0.0	5.0	.80	2.0Δ	9.6m	.50	5	C	16 Input Var	Z24	DL28h
75	RC82S106I	48	8	SE	BTD	100n	900m	0.0	5.0	.80	2.0Δ	4.8m	.50	5	C	16 Inp PROM	B352	DL28j
76	RC82S107I	48	8	SE	BTD	100n	900m	0.0	5.0	.80	2.0§	4.8m	.50	5	C	16 Inp PROM	B352	DL28j
77	MCS1008	56	8	DC	MPX	20u	150m	12	5.0	.80	3.5	1.6m	.40	2	8	KE 28 key	B114	DLØ
78	MTS1008	56	8	DC	MPX	20u	150m	12	5.0	-15%	3.5	1.6m	.40	2	8	KE 28 key	B114	TO101
79	NC7040	64	4	SE	MXN	2.0u	700m	15	15	1.0	14§	1.6m	.80	0	7	Non-Vol EAROM	B201	DL24q
80	RM256A#3	64	4	SE	TAX	50n	8.5m	0.0	5.0	2.0	.80			5	7	PR Non-Vol RMM	PN40A	DL40a
81	RM256#4	64	4	SE	TAX	70n		0.0	5.0					0	7	Pr Non-Vol	PN40A	DL40a
82	SN54186N	64	8	SC	BTX	50n	600m♦	0.0	5.0	.80	2.0	12m	.40	5	C		B17	DL24bu
83	MCM4003AL	64	8	SC	BTX	75n	600m♦	0.0	5.0	.50%	2.5	200uΔ		0	7		B103	DL24w
84	MCM4303AL	64	8	SC	BTX	75n	600m♦	0.0	5.0	.45%	2.5	200uΔ		5	C		B103	DL24w
85	HPROM0512-8	64	8	SE	BTX	55n	400m†	0.0	5.0	.80	2.0	10m	.45	5	C		B17	ML30d
86	HROM0512-2	64	8	SE	BTX	55n	400m†	0.0	5.0	.80	2.0	10m	.45	5	C	F-0 10	B17	ML30a
87	HROM0512-5	64	8	SE	BTX	55n	400m†	0.0	5.0	.80	2.0	10m	.45	0	7	F-0 10	B17	ML30a
88	HPROM0512-2	64	8	SE	BTX	75n	400m†	0.0	5.0	.80	2.0	10m	.45	5	C		B17	ML30d
89	HPROM0512-5	64	8	SE	BTX	75n	400m†	0.0	5.0	.80	2.0	10m	.45	0	7		B17	ML30d
90	MCM5003AL	64	8	SE	BTX	120n	600m	0.0	5.0	.45%	2.5Δ	12m	.45	0	7	PROM	B61	DL24e
91	MCM5003L	64	8	SE	BTX	120n	600m	0.0	5.0	.45%	2.5Δ	12m	.45	0	7	PROM	B61	DL24cq
92	MCM5004AL	64	8	SE	BTX	120n	600m	0.0	5.0	.45%	2.5	12m	.45	0	7	PROM	B61	DL24e
93	MCM5004L	64	8	SE	BTX	120n	600m	0.0	5.0	.45%	2.5	12m	.45	0	7	PROM	B61	DL24cq
94	MCM5303AL	64	8	SE	BTX	120n	600m	0.0	5.0	.50%	2.5Δ	12m	.50	5	C	PROM	B61	DL24e
95	MCM5303L	64	8	SE	BTX	120n	600m	0.0	5.0	.50%	2.5Δ	12m	.50	5	C	PROM	B61	DL24cq
96	MCM5304AL	64	8	SE	BTX	120n	600m	0.0	5.0	.50%	2.5	12m	.50	5	C	PROM	B61	DL24e
97	MCM5304L	64	8	SE	BTX	120n	600m	0.0	5.0	.50%	2.5	12m	.50	5	C	PROM	B61	DL24cq
98	HRM2048	64	32	SE	TAX	240n	400m†	0.0	5.0	.80	2.0			0	7	Programmable	B91	DL42a
99	HRM2048#6	64	32	SE	TAX	500n	640m♦	0.0	5.0	2.0	.80			0	7	PR Non-Vol RMM	B91	DL42a
100	MRM1A64-80	64	80	SC	MXX	330n	9.5	12	12	.40	2.5	1.6m	.40	0	7		B54	PL4
101	RM256A#2	128	2	SE	TAX	50n	8.5m	0.0	5.0	2.0	.80			5	7	PR Non-Vol RMM	PN40A	DL40a
102	RM256#3	128	2	SE	TAX	70n		0.0	5.0					0	7	Pr Non-Vol	PN40A	DL40a
103	NC7053L	128	8		MNX	1.2u	300m♦	5.0	5.0	.80	2.4	10uΔ		0	7	EAROM	Z33	
104	NC7053M	128	8		MNX	1.2u	300m♦	5.0	5.0	.80	2.4	10uΔ		5	C	EAROM	Z33	
105	NC7053P	128	8		MNX	1.2u	300m♦	5.0	5.0	.80	2.4	10uΔ		0	7	EAROM	Z33	
106	pM1024C	128	8	DC	MXX	2.0u	100m	25	0.0	-3.0	-9.0			0	7			FL3a
107	CM2800CPGXXXX	128	8	SC	BTX	50n	400u%	0.0	5.0	.80	2.0	16m	.40	0	7		PN24v	ML21a
108	CM2800MPGXXXX	128	8	SC	BTX	50n	400u%	0.0	5.0	.80	2.0	16m	.40	5	C		PN24v	ML21a

SYMBOLS AND CODES EXPLAINED IN INTERPRETER

3. READ ONLY MEMORIES (ROMS)

IN ORDER OF (1)No.WDS(2)No.BITS/WD(3)OP.MODE PRG.CODE(4)STRUCT.(5)MAX ACC.TIME(6)TYPE No.

LINE No.	6 TYPE NUMBER	ORGANIZATION 1 NO. WORDS	2 BITS PER WORD	3 OP MODE PROG CODE	4 STRUC-TURE CODE	5 MAX. ACCESS TIME (S)	MAX. POWER DISS. (W)	POWER SUPPLY SPAN NEG. (V)	POS. (V)	INPUT LOGIC LEVELS MAX. '0' (V)	MIN. '1' (V)	MIN.OUTPUT SINK CURRENT (A)	@ OUT (V)	OPER TEMP RNGE CODE -	+	GENERAL DESCRIPTION	DRAWINGS FUNCTIONAL EQUIVALENT NUMBER	OUTLINE
1	MM5220	128	8	SC	BTX	75n	600m	0.0	5.0	.80	2.0	10m	.40	5	C		B84	ML47c
2	MM5221	128	8	SC	BTX	75n	600m	0.0	5.0	.80	2.0§	10m	.40	5	C		B84	ML47c
3	MM6220	128	8	SC	BTX	75n	600m	0.0	5.0	.85	2.0	15m	.45	0	7		B84	ML47c
4	MM6221	128	8	SC	BTX	75n	600m	0.0	5.0	.85	2.0§	15m	.45	0	7		B84	ML47c
5	UC7526	128	8	SC	MPA	1.5u	130mØ	27	0.0	-2.0	-9.0	1.6m	-15	0	7		B19	DL24ay
6	CRC3001-1-3	128	8	SC	MPC	4.0u	130m†	27	0.0	-2.0	-9.0			0	7		B4	ML13a
7	CRC3001-2-3	128	8	SC	MPC	4.0u	130m†	27	0.0	-2.0	-9.0			0	7		B4	FL3
8	RO6-1024/8	128	8	SC	MPN	1.0u		12	5.0	.80	3.5§	1.6m	.40	5	C		B233b	ML34e
9	RO7-1024/8	128	8	SC	MPN	1.0u		12	5.0	.80	3.5§	1.6m	.40	0	7		B233b	DL24ck
10	N2420Y#1	128	8	SC	MPX	500n	1.1 ∅	12	12	10*	4.0			2	7		B26a	ML21b
11	N2421Y#1	128	8	SC	MPX	500n	1.1 ∅	12	12	10*	4.0			2	7		B26a	ML21b
12	N2425Y#1	128	8	SC	MPX	500n	1.1 ∅	12	12	10*	4.0			2	7		B26c	ML21b
13	N2426Y#1	128	8	SC	MPX	500n	1.1 ∅	12	12	10*	4.0			2	7		B26c	ML21b
14	MM4220D#1	128	8	SC	MPX	650n	300mØ	12	12	10*	4.0			5	C		B26a	DL24ay
15	MM4220J#1	128	8	SC	MPX	650n	300mØ	12	12	10*	4.0			5	C		B26a	DL24cc
16	MM5220D#1	128	8	SC	MPX	650n	300mØ	12	12	10*	4.0			2	7		B26a	DL24ay
17	MM5220J#1	128	8	SC	MPX	650n	300mØ	12	12	10*	4.0			2	7		B26a	DL24cc
18	MM5220N#1	128	8	SC	MPX	650n	300mØ	12	12	10*	4.0			2	7		B26a	DL24au
19	IM7602CDG	128	8	SC	MPX	750n	360mØ	0.0	12	10*	4.0	3.0m	3.0	5	C		B2a	ML27
20	MM4221J#1	128	8	SC	MPX	950n	204mØ	12	5.0	3.0*	.80			5	C		B26a	DL24cc
21	MM5221J#1	128	8	SC	MPX	950n	204mØ	12	5.0	3.0*	.80			0	7		B26a	DL24cc
22	MM5221N#1	128	8	SC	MPX	950n	204mØ	12	5.0	3.0*	.80			0	7		B26a	DL24au
23	IM7602MDG	128	8	SC	MPX	1.0u	360mØ	0.0	12	10*	4.0	3.0m	3.0	2	7		B2a	ML27
24	MM422#1	128	8	SC	MPX	1.0u	420mØ	12	12	10*	4.0			5	C		B26a	ML30b
25	MM522#1	128	8	SC	MPX	1.0u	420mØ	12	12	10*	4.0			2	7		B26a	ML30b
26	MM3501D	128	8	SC	MPX	4.0u	215m	27	0.0	-2.0	-9.0	10u	-1.0	0	7		B107	DL24ay
27	MM3501J	128	8	SC	MPX	4.0u	215mØ	27	0.0	0.0	-9.0			0	7		B107	DL24cc
28	MM3501N	128	8	SC	MPX	4.0u	215mØ	27	0.0	0.0	-9.0			0	7		B107	DL24au
29	uPD501D	128	8	SC	MPX	4.0u		24	0.0	-2.5%	-9.0			1	7		B217	DL24bh
30	UA2525D#1	128	8	SC	MXX	900n	360m	10	0.0	.80♦	2.7	1.6m	.40	5	C		B9	DL24ay
31	UA3525D#1	128	8	SC	MXX	900n	360m	10	0.0	.80♦	2.7	1.6m	.40	2	7		B9	DL24ay
32	UA3525F#1	128	8	SC	MXX	900n	360m	10	0.0	.80♦	2.7	1.6m	.40	2	7		B9	FL3a
33	pM1024A#1	128	8	SC	MXX	1.0u	100m	25	0.0	-3.0	-9.0			5	C			
34	pM1024A#2	128	8	SC	MXX	1.0u	100m	25	0.0	-3.0	-9.0			5	C			FL3a
35	pM1024AC	128	8	SC	MXX	1.0u	100m	25	0.0	-3.0	-9.0			0	7			
36	pM1024#1	128	8	SC	MXX	2.0u	100m	25	0.0	-3.0	-9.0			5	C			
37	pM1024#2	128	8	SC	MXX	2.0u	100m	25	0.0	-3.0	-9.0			5	C			FL3a
38	pMS1024C	128	8	SC	MXX	4.0u	250m	25	0.0	-2.0	-9.0			0	7			
39	MM422BN	128	8	SS	MPX	1.0u	420mØ	12	12	10*	4.0			5	C	Arctangent Pr	B26a	ML30b
40	MM522BN	128	8	SS	MPX	1.0u	420mØ	12	12	10*	4.0			2	7	Arctangent Pr	B26a	ML30b
41	UA2525F#1	128	8	5C	MXX	900n	360m	10	0.0	.80♦	2.7	1.6m	.40	5	C		B9	FL3a
42	TMS2900JC#2	128	10	SC	MXX	400n	400m	12	5.0	1.0	3.5§	3.2m	.80	2	8		B66	ML47d
43	TMS2900NC#2	128	10	SC	MXX	400n	400m	12	5.0	1.0	3.5§	3.2m	.80	2	8		B66	DL24bu
44	S8457#1	128	12	SC	MPI	1.0u	1.0	12	5.0	.70	4.0	1.6m	.40	0	7		B89	ML13b
45	S8539#1	128	12	SC	MPI	1.0u		12	5.0	.70	4.0	1.6m	.40	0	7		B92	ML13b
46	TMS4500JC	128	16	SC	MPX	55n		20	0.0	-1.0	-10			2	8		B40	DL40a
47	HRM2048#5	128	16	SE	TAX	500n	640m♦	0.0	5.0	2.0	.80			0	7	PR Non-Vol RMM	B91	DL42a
48	MRM2A128-40	128	40	SC	MXX	330n	9.5	12	12	.40	2.5	1.6m	.40	0	7		B54	PL4
49	MRM1B128-80	128	80	SC	MXX	330n	9.5	12	12	.40	2.5	1.6m	.40	0	7		B54	PL4
50	HPROM1256-8	256	1	SE	BTX	50n	525m♦	0.0	5.0	.80	2.0	16m	.45	5	C		B69	DL16au
51	HROM1256-2	256	1	SE	BTX	50n	525m♦	0.0	5.0	.80	2.0§	16m	.45	0	7		B16	DL16au
52	HROM1256-5	256	1	SE	BTX	50n	525m♦	0.0	5.0	.80	2.0§	16m	.45	5	C		B16	DL16au
53	HPROM1256-2	256	1	SE	BTX	60n	600m	0.0	5.0	.80	2.0§	16m	.45	5	C		B69	DL16au
54	HPROM1256-5	256	1	SE	BTX	60n	600m	0.0	5.0	.80	2.0§	16m	.45	0	7		B69	DL16au
55	uPD451D	256	1	SE	MNX	150n	100m	0.0	50	.50	4.5			0	7	PROM	B274	DL24bh
56	RM256A#1	256	1	SE	TAX	50n	8.5m	0.0	5.0	2.0	.80			5	7	PR Non-Vol RMM	PN40A	DL40a
57	RM256#2	256	1	SE	TAX	70n		0.0	5.0					0	7	Pr Non-Vol	PN40A	DL40a
58	DM7597D	256	4	S	BTX	60n		0.0	5.0	.80	2.0§	16m	.40	5	C		B153	DL16bg
59	DM7574D	256	4	S	BTX	85n	550m	0.0	5.0	.80	2.0§	16m	.40	5	C	Field Program	B80	DL16bg
60	DM7574J	256	4	S	BTX	85n	550m	0.0	5.0	.80	2.0§	16m	.40	5	C	Field Program	B80	DL16cr
61	DM8574D	256	4	S	BTX	85n	550m	0.0	5.0	.80	2.0§	16m	.40	0	7	Field Program	B80	DL16bg
62	DM8574J	256	4	S	BTX	85n	550m	0.0	5.0	.80	2.0§	16m	.40	0	7	Field Program	B80	DL16cr
63	MCM10150AL	256	4	SC	BEX	20n	780mØ	0.0	5.2	-1.6%	-.89			3	8		B145a	DL16m
64	MCM10149AL	256	4	SC	BEX	25n	676mØ	0.0	5.2	-1.6%	-.89			3	8		B145	DL16m
65	MD5200	256	4	SC	BTC	50n	575m	0.0	5.5	.80	2.0	10m	.40	5	C		B50	DL16ek
66	MD6200	256	4	SC	BTC	50n	575m	0.0	5.5	.85	2.0	15m	.45	0	7		B50	DL16ek
67	SFC70301K	256	4	SC	BTC	60n	650m	0.0	5.0	.85	2.0	15m	.45	0	7		B80	DL16fb
68	SFC70301KM	256	4	SC	BTC	60n	650m	0.0	5.0	.85	2.0	15m	.45	5	C		B80	DL16fb
69	SFC70301KT	256	4	SC	BTC	60n	650mØ	0.0	5.0	.85	2.0	15m	.45	2	8		B80	DL16fb
70	DM54S187J	256	4	SC	BTD	30n	650m	0.0	5.0	.80	2.0Δ	16m	.50	5	C		B80	DL16cr
71	DM74S187J	256	4	SC	BTD	30n	650m	0.0	5.0	.80	2.0Δ	16m	.45	0	7		B80	DL16cr
72	DM74S187N	256	4	SC	BTD	30n	650m	0.0	5.0	.80	2.0Δ	16m	.45	0	7		B80	DL16bh
73	DM75S97J	256	4	SC	BTD	30n	650m	0.0	5.0	.80	2.0§	16m	.50	5	C		B80	DL16cr
74	DM85S97J	256	4	SC	BTD	30n	650m	0.0	5.0	.80	2.0§	16m	.45	0	7		B80	DL16cr
75	DM85S97N	256	4	SC	BTD	30n	650m	0.0	5.0	.80	2.0§	16m	.45	0	7		B80	DL16bh
76	6200-1D	256	4	SC	BTD	45n	625m♦	0.0	5.0	8.0	2.0Δ	16m	.50	0	7		B50	DL16v
77	6200-1F	256	4	SC	BTD	45n	625m	0.0	5.0	.80	2.0Δ	15m	.50	0	7	ROM	PN16bv	FL49
78	6200-1J	256	4	SC	BTD	45n	625m♦	0.0	5.0	.80	2.0Δ	15m	.50	0	7	ROM	PN16bv	DL16bi
79	6200-1N	256	4	SC	BTD	45n	625m	0.0	5.0	.80	2.0Δ	15m	.50	0	7	ROM	PN16bv	DL16dj
80	6201-1D	256	4	SC	BTD	45n		0.0	5.0	8.0	2.0§	16m	.50	0	7		B50	DL16v
81	6201-1F	256	4	SC	BTD	45n	625m	0.0	5.0	.80	2.0§	15m	.50	0	7	ROM	PN16bv	FL49
82	6201-1J	256	4	SC	BTD	45n	625m♦	0.0	5.0	.80	2.0§	15m	.50	0	7	ROM	PN16bv	DL16bi
83	6201-1N	256	4	SC	BTD	45n	625m	0.0	5.0	.80	2.0§	15m	.50	0	7	ROM	PN16bv	DL16dj
84	93457DC	256	4	SC	BTD	45n	550m	0.0	5.0	.80	2.0Δ	16m	.45	0	7		B123	DL16f
85	93457FC	256	4	SC	BTD	45n	550m	0.0	5.0	.80	2.0Δ	16m	.45	0	7		B123	FL14
86	93457PC	256	4	SC	BTD	45n	550m	0.0	5.0	.80	2.0Δ	16m	.45	0	7		B123	DL16dh
87	93467DC	256	4	SC	BTD	45n	550m♦	0.0	5.0	.80	2.0§	16m	.45	0	7		B123	DL16f
88	93467FC	256	4	SC	BTD	45n	550m♦	0.0	5.0	.80	2.0§	16m	.45	0	7		B123	FL14
89	93467PC	256	4	SC	BTD	45n	550m♦	0.0	5.0	.80	2.0§	16m	.45	0	7		B123	DL16dh
90	C3301A	256	4	SC	BTD	45n	656m	0.0	5.0	.85	2.0	15m	.45	0	7		PN16bz	DL16ek
91	D3301A	256	4	SC	BTD	45n	625m	0.0	5.0	.85	2.0	15m	.45	0	7		PN16cc	DL16cm
92	H6200D	256	4	SC	BTD	45n	625m	0.0	5.0	.80	2.0	15m	.50	0	7		B50	DL16v
93	H6200N	256	4	SC	BTD	45n	625m	0.0	5.0	.80	2.0	15m	.50	0	7		B50	DL16da
94	H6201D	256	4	SC	BTD	45n	625m	0.0	5.0	.80	2.0§	15m	.50	0	7		B50	DL16v
95	H6201N	256	4	SC	BTD	45n	625m	0.0	5.0	.80	2.0§	15m	.50	0	7		B50	DL16da
96	P3301A	256	4	SC	BTD	45n	656m	0.0	5.0	.85	2.0	15m	.45	0	7		PN16bz	DL16at
97	5200-1D	256	4	SC	BTD	60n	650m♦	0.0	5.0	.80	2.0Δ	10m	.50	5	C		B50	DL16v
98	5200-1F	256	4	SC	BTD	60n	625m	0.0	5.0	.80	2.0Δ	10m	.50	5	C	ROM	PN16bv	FL49
99	5200-1J	256	4	SC	BTD	60n	650m♦	0.0	5.0	.80	2.0Δ	10m	.50	5	C	ROM	PN16bv	DL16bi
100	5200-1N	256	4	SC	BTD	60n	625m	0.0	5.0	.80	2.0Δ	10m	.50	5	C	ROM	PN16bv	DL16dj
101	5201-1D	256	4	SC	BTD	60n	650m♦	0.0	5.0	.80	2.0§	10m	.50	5	C		B50	DL16v
102	5201-1F	256	4	SC	BTD	60n	625m	0.0	5.0	.80	2.0§	10m	.50	5	C	ROM	PN16bv	FL49
103	5201-1J	256	4	SC	BTD	60n	650m♦	0.0	5.0	.80	2.0§	10m	.50	5	C	ROM	PN16bv	DL16bi
104	5201-1N	256	4	SC	BTD	60n	625m	0.0	5.0	.80	2.0§	10m	.50	5	C	ROM	PN16bv	DL16dj
105	93457DM	256	4	SC	BTD	60n	550m	0.0	5.0	.80	2.0Δ	16m	.45	5	C		B123	DL16f
106	93457FM	256	4	SC	BTD	60n	550m	0.0	5.0	.80	2.0Δ	16m	.45	5	C		B123	FL14
107	93467DM	256	4	SC	BTD	60n	550m♦	0.0	5.0	.80	2.0§	16m	.45	5	C		B123	DL16f
108	93467FM	256	4	SC	BTD	60n	550m♦	0.0	5.0	.80	2.0§	16m	.45	5	C		B123	FL14
109	CM3301A	256	4	SC	BTD	60n	625m	0.0	5.0	.80	2.1	10m	.45	5	C		PN16cc	DL16ek
110	DM3301A	256	4	SC	BTD	60n	625m	0.0	5.0	.80	2.1	10m	.45	5	C		PN16cc	DL16cm

SYMBOLS AND CODES EXPLAINED IN INTERPRETER

3. READ ONLY MEMORIES (ROMS)

IN ORDER OF (1)No.WDS(2)No.BITS/WD(3)OP.MODE PRG.CODE(4)STRUCT.(5)MAX ACC.TIME(6)TYPE No.

LINE No.	6 TYPE NUMBER	ORGANIZATION 1 NO. WORDS	2 BITS PER WORD	3 OP MODE PROG CODE	4 STRUC-TURE CODE	5 MAX. ACCESS TIME (S)	MAX. POWER DISS. (W)	POWER SUPPLY SPAN NEG. (V)	POS. (V)	INPUT LOGIC LEVELS MAX. '0' (V)	MIN. '1' (V)	MIN.OUTPUT SINK CURRENT (A)	@ OUT (V)	OPER TEMP RNGE CODE -	+	GENERAL DESCRIPTION	DRAWINGS FUNCTIONAL EQUIVALENT NUMBER	OUTLINE
1	H5200D	256	4	SC	BTD	60n	650m	0.0	5.0	.80	2.0	10m	.50	5	C		B50	DL16v
2	H5200N	256	4	SC	BTD	60n	650m	0.0	5.0	.80	2.0	10m	.50	5	C		B50	DL16da
3	H5201D	256	4	SC	BTD	60n	650m	0.0	5.0	.80	2.0§	10m	.50	5	C		B50	DL16v
4	H5201N	256	4	SC	BTD	60n	650m	0.0	5.0	.80	2.0§	10m	.50	5	C		B50	DL16da
5	C3301	256	4	SC	BTD	90n	650m	0.0	5.0	.85	2.0	15m	.45	0	7		PN16bz	DL16ek
6	P3301	256	4	SC	BTD	90n	650m	0.0	5.0	.85	2.0	15m	.45	0	7		PN16bz	DL16ek
7	DM7597N	256	4	SC	BTX	35n	550m♦	0.0	5.0	.80	2.0§	16m	.40	5	C		B106	ML2e
8	DM54187D	256	4	SC	BTX	36n	550m	0.0	5.0	.80	2.0	16m	.40	5	C		B80	DL16bg
9	DM54187J	256	4	SC	BTX	36n	550m	0.0	5.0	.80	2.0Δ	16m	.40	5	C		B80	DL16cr
10	DM74187J	256	4	SC	BTX	36n	550m	0.0	5.0	.80	2.0Δ	16m	.40	0	7		B80	DL16cr
11	DM74187N	256	4	SC	BTX	36n	550m	0.0	5.0	.80	2.0Δ	16m	.40	0	7		B80	DL16bh
12	MCM4006AL	256	4	SC	BTX	40n	6.0m%	0.0	5.0	.45%	2.5	12m	.45	0	7		E12	ML78
13	5200D	256	4	SC	BTX	50n	625m	0.0	5.0	.80	2.0	10m	.45	5	C		PN16bv	DL16v
14	5200J	256	4	SC	BTX	50n	625m	0.0	5.0	.80	2.0	10m	.45	5	C		PN16bv	DL16da
15	5200N	256	4	SC	BTX	50n	625m	0.0	5.0	.80	2.0	10m	.45	5	C		PN16bv	DL16da
16	5201D	256	4	SC	BTX	50n	625m	0.0	5.0	.80	2.0§	10m	.45	5	C		PN16bv	DL16v
17	5201J	256	4	SC	BTX	50n	625m	0.0	5.0	.80	2.0§	10m	.45	5	C		PN16bv	DL16da
18	5201N	256	4	SC	BTX	50n	625m	0.0	5.0	.80	2.0§	10m	.45	5	C		PN16bv	DL16da
19	6200D	256	4	SC	BTX	50n	625m	0.0	5.0	.80	2.0	16m	.45	0	7		PN16bv	DL16v
20	6200J	256	4	SC	BTX	50n	625m	0.0	5.0	.80	2.0	16m	.45	0	7		PN16bv	DL16da
21	6200N	256	4	SC	BTX	50n	625m	0.0	5.0	.80	2.0	16m	.45	0	7		PN16bv	DL16da
22	6201D	256	4	SC	BTX	50n	625m	0.0	5.0	.80	2.0§	16m	.45	0	7		PN16bv	DL16v
23	6201J	256	4	SC	BTX	50n	625m	0.0	5.0	.80	2.0§	16m	.45	0	7		PN16bv	DL16da
24	6201N	256	4	SC	BTX	50n	625m	0.0	5.0	.80	2.0§	16m	.45	0	7		PN16bv	DL16da
25	93406DC	256	4	SC	BTX	50n	650m	0.0	5.0	.85	2.0	15m	.45	0	7		B123	DL16n
26	CM2850CDEXXXX	256	4	SC	BTX	50n	400u%	0.0	5.0	.80	2.0	16m	.40	0	7		PN16bz	DL16a
27	CM2850CPEXXXX	256	4	SC	BTX	50n	400u%	0.0	5.0	.80	2.0	16m	.40	0	7		PN16bz	ML2c
28	CM2850MDEXXXX	256	4	SC	BTX	50n	400u%	0.0	5.0	.80	2.0	16m	.40	5	C		PN16bz	DL16a
29	CM2850MPEXXXX	256	4	SC	BTX	50n	400u%	0.0	5.0	.80	2.0	16m	.40	5	C		PN16bz	ML2c
30	FJB93406	256	4	SC	BTX	50n	650m♦	0.0	5.0	.85	2.0	15m	.45	0	7		B48	ML4e
31	MCM4004L	256	4	SC	BTX	50n	6.0m%	0.0	5.0	.45%	2.5	12m	.45	0	7		E12	DL16bp
32	N82S226B	256	4	SC	BTX	50n	600m	0.0	5.0	.85	2.0Δ	16m	.50	0	7		B198	DL16fm
33	N82S229B	256	4	SC	BTX	50n	600m	0.0	5.0	.85	2.0§	16m	.50	0	7		B198	DL16fm
34	DM7597J	256	4	SC	BTX	60n	550m♦	0.0	5.0	.80	2.0§	16m	.40	5	C		B153	DL16cr
35	DM8597J	256	4	SC	BTX	60n	550m	0.0	5.0	.80	2.0§	16m	.40	0	7		B153	DL16cr
36	DM8597N	256	4	SC	BTX	60n	550m	0.0	5.0	.80	2.0§	16m	.40	0	7		B153	DL16bh
37	HROM1024B2	256	4	SC	BTX	60n	500m†	0.0	5.0	.85	2.0	15m	.45	5	C			
38	HROM1024B5	256	4	SC	BTX	60n	500m†	0.0	5.0	.85	2.0	15m	.45	0	7			
39	MCM4004AL	256	4	SC	BTX	60n	700m	0.0	5.0	.45%	2.5	10m	.45	0	7		E12	DL16m
40	MCM4304L	256	4	SC	BTX	60n	700m	0.0	5.0	.45%	2.5	10m	.45	5	C		E12	DL16eq
41	DM76L97F	256	4	SC	BTX	70n	100m	0.0	5.0	.70	2.0§	2.0m	.30	5	C		B80	FL37
42	DM86L97F	256	4	SC	BTX	70n	100m	0.0	5.0	.70	2.0§	3.2m	.40	0	7		B80	FL37
43	RC82S226F	256	4	SC	BTX	70n	625m	0.0	5.0	.80	2.0Δ	16m	.50	5	C		B198	DL16cu
44	RC82S229F	256	4	SC	BTX	70n	625m	0.0	5.0	.80	2.0§	16m	.50	5	C		B198	DL16cu
45	DM54L187AF	256	4	SC	BTX	85n	90m†	0.0	5.0	.70	2.0	2.0m	.30	5	C		B80	FL37
46	DM54L187AJ	256	4	SC	BTX	85n	90m†	0.0	5.0	.70	2.0Δ	2.0m	.30	5	C	ROM	B80	DL16cr
47	DM54L187AN	256	4	SC	BTX	85n	90m†	0.0	5.0	.70	2.0Δ	2.0m	.30	5	C	ROM	B80	DL16bh
48	DM54L187AW	256	4	SC	BTX	85n	90m†	0.0	5.0	.70	2.0Δ	2.0m	.30	5	C	ROM	B80	FL39
49	DM74L187AF	256	4	SC	BTX	85n	90m†	0.0	5.0	.70	2.0	3.2m	.40	0	7		B80	FL37
50	DM74L187AJ	256	4	SC	BTX	85n	90m†	0.0	5.0	.70	2.0Δ	3.2m	.40	0	7	ROM	B80	DL16cr
51	DM74L187AN	256	4	SC	BTX	85n	90m†	0.0	5.0	.70	2.0Δ	3.2m	.40	0	7	ROM	B80	DL16bh
52	DM74L187AW	256	4	SC	BTX	85n	90m†	0.0	5.0	.70	2.0Δ	3.2m	.40	0	7	ROM	B80	FL39
53	QRO1024-1	256	4	SC	BTX	90n	450m†	0.0	7.0	.80	2.0	16m	.40	5	C		B34	DL16au
54	QRO1024-9	256	4	SC	BTX	90n	450m†	0.0	7.0	.80	2.0	16m	.40	0	7		B34	DL16au
55	DM76L97N	256	4	SC	BTX	130n	100m	0.0	5.0	.70	2.0§	2.0m	.30	5	C		B80	DL16bh
56	DM86L97J	256	4	SC	BTX	130n	100m	0.0	5.0	.70	2.0§	3.2m	.40	0	7		B80	DL16cr
57	DM86L97W	256	4	SC	BTX	130n	100m	0.0	5.0	.70	2.0§	3.2m	.40	0	7		B80	FL39
58	RO6-1024/4	256	4	SC	MPN	1.0u		12	5.0	.80	3.5§	1.6m	.40	5	C		B233a	DL16d
59	RO7-1024/4	256	4	SC	MPN	1.0u		12	5.0	.80	3.5§	1.6m	.40	0	7		B233a	DL16bs
60	N2420Y#2	256	4	SC	MPX	500n	1.1 ∅	12	12	10*	4.0			2	7		B26a	ML21b
61	N2421Y#2	256	4	SC	MPX	500n	1.1 ∅	12	12	10*	4.0			2	7		B26a	ML21b
62	N2425Y#2	256	4	SC	MPX	500n	1.1 ∅	12	12	10*	4.0			2	7		B26c	ML21b
63	N2426Y#2	256	4	SC	MPX	500n	1.1 ∅	12	12	10*	4.0			2	7		B26c	ML21b
64	MM4210D	256	4	SC	MPX	650n	300mØ	12	12	10*	4.0			5	C		B27	ML198
65	MM4210J	256	4	SC	MPX	650n	300mØ	12	12	10*	4.0			5	C	ROM	B27	DL16cr
66	MM4220D#2	256	4	SC	MPX	650n	300mØ	12	12	10*	4.0			5	C		B26a	DL24ay
67	MM4220J#2	256	4	SC	MPX	650n	300mØ	12	12	10*	4.0			5	C		B26a	DL24cc
68	MM5210D	256	4	SC	MPX	650n	300mØ	12	12	10*	4.0			0	7	ROM	B27	ML198
69	MM5210J	256	4	SC	MPX	650n	300mØ	12	12	10*	4.0			0	7	ROM	B27	DL16cr
70	MM5210N	256	4	SC	MPX	650n	300mØ	12	12	10*	4.0			0	7	ROM	B27	DL16bh
71	MM5220D#2	256	4	SC	MPX	650n	300mØ	12	12	10*	4.0			2	7		B26a	DL24ay
72	MM5220J#2	256	4	SC	MPX	650n	300mØ	12	12	10*	4.0			2	7		B26a	DL24cc
73	MM5220N#2	256	4	SC	MPX	650n	300mØ	12	12	10*	4.0			2	7		B26a	DL24au
74	IM7601CDE	256	4	SC	MPX	750n	360mØ	0.0	12	10*	4.0	3.0m	3.0	5	C		B2	DL16a
75	MM4211D	256	4	SC	MPX	950n	60mØ	12	5.0	3.0*	.80			5	C	ROM	B27	ML198
76	MM4211J	256	4	SC	MPX	950n	60mØ	12	5.0	3.0*	.80			5	C	ROM	B27	DL16cr
77	MM4221J#2	256	4	SC	MPX	950n	204mØ	12	5.0	3.0*	.80			5	C		B26a	DL24cc
78	MM5211D	256	4	SC	MPX	950n	60mØ	12	5.0	3.0*	.80			2	7	ROM	B27	ML198
79	MM5211J	256	4	SC	MPX	950n	60mØ	12	5.0	3.0*	.80			2	7	ROM	B27	DL16cr
80	MM5211N	256	4	SC	MPX	950n	60mØ	12	5.0	3.0*	.80			2	7	ROM	B27	DL16bh
81	MM5221J#2	256	4	SC	MPX	950n	204mØ	12	5.0	3.0*	.80			0	7		B26a	DL24cc
82	MM5221N#2	256	4	SC	MPX	950n	204mØ	12	5.0	3.0*	.80			0	7		B26a	DL24au
83	IM7601MDE	256	4	SC	MPX	1.0u	360mØ	0.0	12	10*	4.0	3.0m	3.0	2	7		B2	DL16a
84	MM421	256	4	SC	MPX	1.0u	420mØ	12	12	10*	4.0			5	C		B27	ML4b
85	MM422#2	256	4	SC	MPX	1.0u	420mØ	12	12	10*	4.0			5	C		B26a	ML30b
86	MM521	256	4	SC	MPX	1.0u	420mØ	12	12	10*	4.0			2	7		B27	ML4b
87	MM522#2	256	4	SC	MPX	1.0u	420mØ	12	12	10*	4.0			2	7		B26a	ML30b
88	S8452	256	4	SC	MPX	5.0u	500m†	28	0.0	-9.0	-2.0			0	7		B308	ML44
89	TMS2800JC	256	4	SC	MXX	900n	200m♦	24	0.0	-3.0	-8.0			2	8		B22	ML37
90	TMS2800NC	256	4	SC	MXX	900n	170m†	12	12	-3.0	-8.0			2	8		B22	DL16ez
91	UA2525D#2	256	4	SC	MXX	900n	360m	10	0.0	.80♦	2.7	1.6m	.40	5	C		B9	DL24ay
92	UA2525F#2	256	4	SC	MXX	900n	360m	10	0.0	.80♦	2.7	1.6m	.40	5	C		B9	FL3a
93	UA3525D#2	256	4	SC	MXX	900n	360m	10	0.0	.80♦	2.7	1.6m	.40	2	7		B9	DL24ay
94	UA3525F#2	256	4	SC	MXX	900n	360m	10	0.0	.80♦	2.7	1.6m	.40	2	7		B9	FL3a
95	GXB10149A	256	4	SE	BEX	12n	572 ♦	5.2	0.0	-1.4	-1.1			0	8	PROM	B200	DL16t
96	10149D	256	4	SE	BEX	25n	728m♦	5.2	0.0	-1.6%	-.98			3	8		B224	DL16v
97	MCM10149F	256	4	SE	BEX	30n	540m†	5.2	0.0	-.96	-1.8	50mØ		0	7	PROM	B145	FL34
98	MCM10549F	256	4	SE	BEX	30n	540m†	5.2	0.0	-.93	-1.8	50mØ		5	C	PROM	B145	FL34
99	MCM10549L	256	4	SE	BEX	30n	540m†	5.2	0.0	-.93	-1.8	50mØ		5	C	PROM	B145	DL16bm
100	MD6300	256	4	SE	BTC	55n	575m	0.0	5.5	.85	2.0	15m	.45	0	7		B50a	DL16ek
101	MD5300	256	4	SE	BTC	65n	575m	0.0	5.5	.80	2.0	10m	.40	5	C		B50a	DL16ek
102	53PS140F	256	4	SE	BTD	27n	390m†	0.0	5.0	.80	2.0Δ	16m	.50	5	C	PROM;Pwr Sw	PN16bv	FL49
103	53PS140J	256	4	SE	BTD	27n	390m†	0.0	5.0	.80	2.0Δ	16m	.50	5	C	PROM;Pwr Sw	PN16bv	DL16bi
104	53PS140N	256	4	SE	BTD	27n	390m†	0.0	5.0	.80	2.0Δ	16m	.50	5	C	PROM;Pwr Sw	PN16bv	DL16dj
105	53PS141F	256	4	SE	BTD	27n	390m†	0.0	5.0	.80	2.0§	16m	.50	5	C	PROM;Pwr Sw	PN16bv	FL49
106	53PS141J	256	4	SE	BTD	27n	390m†	0.0	5.0	.80	2.0§	16m	.50	5	C	PROM;Pwr Sw	PN16bv	DL16bi

SYMBOLS AND CODES EXPLAINED IN INTERPRETER

3. READ ONLY MEMORIES (ROMS)

IN ORDER OF (1)No.WDS(2)No.BITS/WD(3)OP.MODE PRG.CODE(4)STRUCT.(5)MAX ACC.TIME(6)TYPE No.

LINE No.	6 TYPE NUMBER	ORGANIZATION 1 NO. WORDS	2 BITS PER WORD	3 OP MODE PROG CODE	4 STRUC-TURE CODE	5 MAX. ACCESS TIME (S)	MAX. POWER DISS. (W)	POWER SUPPLY SPAN NEG. (V)	POS. (V)	INPUT LOGIC LEVELS MAX. '0' (V)	MIN. '1' (V)	MIN.OUTPUT SINK CURRENT (A)	@ OUT (V)	OPER TEMP RNGE CODE -	+	GENERAL DESCRIPTION	DRAWINGS FUNCTIONAL EQUIVALENT NUMBER	OUTLINE
1	53PS141N	256	4	SE	BTD	27n	390m†	0.0	5.0	.80	2.0§	16m	.50	5	C	PROM;Pwr Sw	PN16bv	DL16dj
2	63PS140F	256	4	SE	BTD	27n	390m†	0.0	5.0	.80	2.0Δ	16m	.45	0	7	PROM;Pwr Sw	PN16bv	FL49
3	63PS140J	256	4	SE	BTD	27n	390m†	0.0	5.0	.80	2.0Δ	16m	.45	0	7	PROM;Pwr Sw	PN16bv	DL16bi
4	63PS140N	256	4	SE	BTD	27n	390m†	0.0	5.0	.80	2.0Δ	16m	.45	0	7	PROM;Pwr Sw	PN16bv	DL16dj
5	63PS141F	256	4	SE	BTD	27n	390m†	0.0	5.0	.80	2.0§	16m	.45	0	7	PROM;Pwr Sw	PN16bv	FL49
6	63PS141J	256	4	SE	BTD	27n	390m†	0.0	5.0	.80	2.0§	16m	.45	0	7	PROM;Pwr Sw	PN16bv	DL16bi
7	63PS141N	256	4	SE	BTD	27n	390m†	0.0	5.0	.80	2.0§	16m	.45	0	7	PROM;Pwr Sw	PN16bv	DL16dj
8	DM54S287D	256	4	SE	BTD	30n	650m	0.0	5.0	.80	2.0§	16m	.50	5	C	Field Program	B135	DL16bg
9	DM54S387D	256	4	SE	BTD	30n	650m	0.0	5.0	.80	2.0	16m	.50	5	C	Field Program	B135	DL16bg
10	63S140F	256	4	SE	BTD	45n	600m	0.0	5.0	.80	2.0Δ	16m	.45	0	7	PROM	PN16bv	FL49
11	63S140J	256	4	SE	BTD	45n	600m	0.0	5.0	.80	2.0Δ	16m	.45	0	7	PROM	PN16bv	DL16bi
12	63S140N	256	4	SE	BTD	45n	600m	0.0	5.0	.80	2.0Δ	16m	.45	0	7	PROM	PN16bv	DL16dj
13	63S141F	256	4	SE	BTD	45n	600m	0.0	5.0	.80	2.0§	16m	.45	0	7	PROM	PN16bv	FL49
14	63S141J	256	4	SE	BTD	45n	600m	0.0	5.0	.80	2.0§	16m	.45	0	7	PROM	PN16bv	DL16bi
15	63S141N	256	4	SE	BTD	45n	600m	0.0	5.0	.80	2.0§	16m	.45	0	7	PROM	PN16bv	DL16dj
16	93417DC	256	4	SE	BTD	45n	550m	0.0	5.0	.80	2.0	16m	.45	0	7	Field Program	B123	DL16n
17	93417FC	256	4	SE	BTD	45n	550m	0.0	5.0	.80	2.0Δ	16m	.45	0	7	Field Program	B123	FL14
18	93417PC	256	4	SE	BTD	45n	550m	0.0	5.0	.80	2.0Δ	16m	.45	0	7	Field Program	B123	DL16dh
19	93427DC	256	4	SE	BTD	45n	550m	0.0	5.0	.80	2.0§	16m	.45	0	7	Field Program	B123	DL16n
20	93427FC	256	4	SE	BTD	45n	550m	0.0	5.0	.80	2.0§	16m	.45	0	7	Field Program	B123	FL14
21	93427PC	256	4	SE	BTD	45n	550m	0.0	5.0	.80	2.0§	16m	.45	0	7	Field Program	B123	DL16dh
22	TM601	256	4	SE	BTD	45n	550m	0.0	5.0	.80	2.0Δ	16m	.45	0	7	Field Program	B123	DL16dh
23	TM621	256	4	SE	BTD	45n	550m	0.0	5.0	.80	2.0§	16m	.45	0	7	Field Program	B123	DL16dh
24	D3601-1	256	4	SE	BTD	50n	650m♦	0.0	5.0	.85	2.0Δ	15m	.45	6	C	PROM	PN16cc	DL16cm
25	D3621-1	256	4	SE	BTD	50n	650m♦	0.0	5.0	.85	2.0§	15m	.45	6	C	Prom	PN16cc	DL16dd
26	53S140F	256	4	SE	BTD	55n	600m	0.0	5.0	.80	2.0Δ	16m	.50	5	C	PROM	PN16bv	FL49
27	53S140J	256	4	SE	BTD	55n	600m	0.0	5.0	.80	2.0Δ	16m	.50	5	C	PROM	PN16bv	DL16bi
28	53S140N	256	4	SE	BTD	55n	600m	0.0	5.0	.80	2.0Δ	16m	.50	5	C	PROM	PN16bv	DL16dj
29	53S141F	256	4	SE	BTD	55n	600m	0.0	5.0	.80	2.0§	16m	.50	5	C	PROM	PN16bv	FL49
30	53S141J	256	4	SE	BTD	55n	600m	0.0	5.0	.80	2.0§	16m	.50	5	C	PROM	PN16bv	DL16bi
31	53S141N	256	4	SE	BTD	55n	600m	0.0	5.0	.80	2.0§	16m	.50	5	C	PROM	PN16bv	DL16dj
32	63LS140F	256	4	SE	BTD	55n	325m	0.0	5.0	.80	2.0Δ	16m	.45	0	7	PROM	PN16bv	FL49
33	63LS140J	256	4	SE	BTD	55n	325m	0.0	5.0	.80	2.0Δ	16m	.45	0	7	PROM	PN16bv	DL16bi
34	63LS140N	256	4	SE	BTD	55n	325m	0.0	5.0	.80	2.0Δ	16m	.45	0	7	PROM	PN16bv	DL16dj
35	63LS141F	256	4	SE	BTD	55n	325m	0.0	5.0	.80	2.0§	16m	.45	0	7	PROM	PN16bv	FL49
36	63LS141J	256	4	SE	BTD	55n	325m	0.0	5.0	.80	2.0§	16m	.45	0	7	PROM	PN16bv	DL16bi
37	63LS141N	256	4	SE	BTD	55n	325m	0.0	5.0	.80	2.0§	16m	.45	0	7	PROM	PN16bv	DL16dj
38	6300-1N	256	4	SE	BTD	55n	650m	0.0	5.0	.80	2.0Δ	16m	.50	0	7	PROM	PN16co	DL16dj
39	6301-1N	256	4	SE	BTD	55n	650m	0.0	5.0	.80	2.0§	16m	.50	0	7	PROM	PN16co	DL16dj
40	29662DC	256	4	SE	BTD	60n	650m	0.0	5.0	.80	2.0Δ	16m	.50	0	7	PROM;Pwr Sw	B316a	DLØ
41	29663DC	256	4	SE	BTD	60n	650m	0.0	5.0	.80	2.0§	16m	.50	0	7	PROM;Pwr Sw	B316a	DLØ
42	93417DM	256	4	SE	BTD	60n	550m	0.0	5.0	.80	2.0	16m	.45	5	C	Field Program	B123	DL16n
43	93417FM	256	4	SE	BTD	60n	550m	0.0	5.0	.80	2.0Δ	16m	.45	5	C	Field Program	B123	FL14
44	93427DM	256	4	SE	BTD	60n	550m	0.0	5.0	.80	2.0§	16m	.45	5	C	Field Program	B123	DL16n
45	93427FM	256	4	SE	BTD	60n	550m	0.0	5.0	.80	2.0§	16m	.45	5	C	Field Program	B123	FL14
46	AM27S10DC	256	4	SE	BTD	60n	550m	0.0	5.0	.80	2.0	16	.45	0	7	PROM	B176	DL16ct
47	AM27S10DM	256	4	SE	BTD	60n	550m	0.0	5.0	.80	2.0	16	.45	5	C	PROM	B176	DL16ay
48	AM27S11DC	256	4	SE	BTD	60n	600m	0.0	5.0	.80	2.0§	16	.45	0	7	PROM	B176	DL16ct
49	AM27S11DM	256	4	SE	BTD	60n	600m	0.0	5.0	.80	2.0§	16	.45	5	C	PROM	B176	DL16ay
50	53LS140F	256	4	SE	BTD	65n	325m	0.0	5.0	.80	2.0Δ	12m	.50	5	C	PROM	PN16bv	FL49
51	53LS140J	256	4	SE	BTD	65n	325m	0.0	5.0	.80	2.0Δ	12m	.50	5	C	PROM	PN16bv	DL16bi
52	53LS140N	256	4	SE	BTD	65n	325m	0.0	5.0	.80	2.0Δ	12m	.50	5	C	PROM	PN16bv	DL16dj
53	53LS141F	256	4	SE	BTD	65n	325m	0.0	5.0	.80	2.0§	12m	.50	5	C	PROM	PN16bv	FL49
54	53LS141J	256	4	SE	BTD	65n	325m	0.0	5.0	.80	2.0§	12m	.50	5	C	PROM	PN16bv	DL16bi
55	53LS141N	256	4	SE	BTD	65n	325m	0.0	5.0	.80	2.0§	12m	.50	5	C	PROM	PN16bv	DL16dj
56	29660DC	256	4	SE	BTD	70n	650m	0.0	5.0	.80	2.0Δ	16m	.50	0	7	PROM	B316	DLØ
57	29661DC	256	4	SE	BTD	70n	650m	0.0	5.0	.80	2.0§	16m	.50	0	7	PROM	B316	DLØ
58	C3601	256	4	SE	BTD	70n	512m†	0.0	5.0	.85	2.0	15m	.45	0	7		PN16bz	DL16ek
59	D3601	256	4	SE	BTD	70n	650m♦	0.0	5.0	.85	2.0Δ	15m	.45	6	C	PROM	PN16cc	DL16cm
60	D3621	256	4	SE	BTD	70n	650m♦	0.0	5.0	.85	2.0§	15m	.45	6	C	Prom	PN16cc	DL16dd
61	5300-1N	256	4	SE	BTD	75n	650m	0.0	5.0	.80	2.0Δ	12m	.50	5	C	PROM	PN16co	DL16dj
62	5301-1N	256	4	SE	BTD	75n	650m	0.0	5.0	.80	2.0§	12m	.50	5	C	PROM	PN16co	DL16dj
63	29662DM	256	4	SE	BTD	75n	650m	0.0	5.0	.80	2.0Δ	16m	.50	5	C	PROM;Pwr Sw	B316a	DLØ
64	29663DM	256	4	SE	BTD	75n	650m	0.0	5.0	.80	2.0§	16m	.50	5	C	PROM;Pwr Sw	B316a	DLØ
65	29660DM	256	4	SE	BTD	80n	650m	0.0	5.0	.80	2.0Δ	16m	.50	5	C	PROM	B316	DLØ
66	29661DM	256	4	SE	BTD	80n	650m	0.0	5.0	.80	2.0§	16m	.50	5	C	PROM	B316	DLØ
67	DM3601	256	4	SE	BTD	90n	650m	0.0	5.0	.80	2.1	10m	.45	5	C	PROM	PN16cc	DL16cm
68	M3621	256	4	SE	BTD	90n	650m♦	0.0	5.0	.80	2.1	10m	.45	5	C		PN16cc	ML127p
69	MD3601	256	4	SE	BTD	90n	650m♦	0.0	5.0	.80	2.1Δ			5	C	Prom	PN16cc	DL16dd
70	HPROM1024-2	256	4	SE	BTX	50n	500m†	0.0	5.0	.80	2.0§	15m	.45	5	C		PN16bz	DL16au
71	HPROM1024-5	256	4	SE	BTX	50n	500m†	0.0	5.0	.80	2.0§	15m	.45	0	7		PN16bz	DL16au
72	HPROM1024-8	256	4	SE	BTX	50n	500m†	0.0	5.0	.80	2.0	15m	.45	5	C		PN16bz	DL16au
73	HPROM1024A2	256	4	SE	BTX	50n	500m†	0.0	5.0	.80	2.0	15m	.45	5	C		PN16bz	DL16au
74	HPROM1024A5	256	4	SE	BTX	50n	500m†	0.0	5.0	.80	2.0	15m	.45	0	7		PN16bz	DL16au
75	HPROM1024A8	256	4	SE	BTX	50n	500m†	0.0	5.0	.80	2.0	15m	.45	5	C		PN16bz	DL16au
76	N82S126B	256	4	SE	BTX	50n	600m	0.0	5.0	.85	2.0Δ	16m	.50	0	7	PROM	B198	DL16fm
77	N82S129B	256	4	SE	BTX	50n	600m	0.0	5.0	.85	2.0§	16m	.50	0	7	PROM	B198	DL16fm
78	RC82S126F	256	4	SE	BTX	50n	600m	0.0	5.0	.85	2.0Δ	16m	.45	0	7	PROM	B198	DL16cu
79	RC82S129F	256	4	SE	BTX	50n	600m	0.0	5.0	.85	2.0§	16m	.45	0	7	PROM	B198	DL16cv
80	5300-1D	256	4	SE	BTX	60n	600m♦	0.0	5.0	.80	2.0Δ	12m	.50	5	C	Fld Prog	B50	DL16v
81	5300D	256	4	SE	BTX	60n	600m	0.0	5.0	.80	2.0	10m	.45	5	C		B50	DL16v
82	5300J	256	4	SE	BTX	60n	600m	0.0	5.0	.80	2.0	10m	.45	5	C		B50	DL16cq
83	5301-1D	256	4	SE	BTX	60n	600m♦	0.0	5.0	.80	2.0§	12m	.50	5	C	Fld Prog	B50	DL16v
84	5301D	256	4	SE	BTX	60n	600m	0.0	5.0	.80	2.0§	10m	.45	5	C		B50	DL16v
85	5301J	256	4	SE	BTX	60n	600m	0.0	5.0	.80	2.0§	10m	.45	5	C		B50	DL16cq
86	6300-1D	256	4	SE	BTX	60n	600m♦	0.0	5.0	8.0	2.0Δ	16m	.50	0	7	Fld Prog	B50	DL16v
87	6300D	256	4	SE	BTX	60n	600m	0.0	5.0	.80	2.0	16m	.45	0	7		B50	DL16v
88	6300J	256	4	SE	BTX	60n	600m	0.0	5.0	.80	2.0	16m	.45	0	7		B50	DL16cq
89	6301-1D	256	4	SE	BTX	60n	600m♦	0.0	5.0	8.0	2.0§	16m	.50	0	7	Fld Prog	B50	DL16v
90	6301D	256	4	SE	BTX	60n	600m	0.0	5.0	.80	2.0§	16m	.45	0	7		B50	DL16v
91	6301J	256	4	SE	BTX	60n	600m	0.0	5.0	.80	2.0§	16m	.45	0	7		B50	DL16cq
92	DM7573D	256	4	SE	BTX	60n	400m†	0.0	5.0	.80	2.0	16m	.40	5	C	Field Program	B80	DL16bg
93	DM8573D	256	4	SE	BTX	60n	400m†	0.0	5.0	.80	2.0	16m	.40	0	7	Field Program	B80	DL16bg
94	FLR131	256	4	SE	BTX	60n	500m	0.0	5.0	.80	2.0	20m	.40	0	7	PROM		
95	IM5603ACDE	256	4	SE	BTX	60n	650m	0.0	5.0	.80	2.0Δ	40uΔ	5.5	0	7	PROM	B412	DL16a
96	IM5603ACFE	256	4	SE	BTX	60n	439u%	0.0	5.0	.80	2.0Δ	40uΔ	5.5	0	7	PROM	B412	FL76
97	IM5603ACJE	256	4	SE	BTX	60n	439u%	0.0	5.0	.80	2.0Δ	40uΔ	55	0	7	PROM	B412	DL16ej
98	IM5603ACPE	256	4	SE	BTX	60n	439u%	0.0	5.0	.80	2.0Δ	40uΔ	5.5	0	7	PROM	B412	DL16bn
99	IM5603AMJE	256	4	SE	BTX	60n	439u%	0.0	5.0	.80	2.0Δ	100uΔ	5.5	5	C	PROM	B412	DL16ej
100	IM5603CDE#	256	4	SE	BTX	60n	650m	0.0	5.0	.80	2.0Δ	16m	.30	0	7	PROM	B82	DL16ak
101	IM5603MDE#	256	4	SE	BTX	60n	650m	0.0	5.0	.80	2.0Δ	16m	.30	5	C	PROM	B82	DL16ak
102	IM5603MFE	256	4	SE	BTX	60n	500m	0.0	5.0	.85	2.0	16m	.45	5	C		B82	
103	IM5603MFE#	256	4	SE	BTX	60n	650m	0.0	5.0	.80	2.0Δ	16m	.30	5	C	PROM	B82	FL76
104	IM5623ACDE	256	4	SE	BTX	60n	650m	0.0	5.0	.80	2.0Ø	40uΔ	5.5	0	7	PROM	B412	DL16a
105	IM5623ACFE	256	4	SE	BTX	60n	439u%	0.0	5.0	.80	2.0Ø	40uΔ	5.5	0	7	PROM	B412	FL76
106	IM5623ACJE	256	4	SE	BTX	60n	439u%	0.0	5.0	.80	2.0Ø	40uΔ	5.5	0	7	PROM	B412	DL16ej
107	IM5623ACPE	256	4	SE	BTX	60n	439u%	0.0	5.0	.80	2.0Ø	40uΔ	5.5	0	7	PROM	B412	DL16bn
108	IM5623AMDE	256	4	SE	BTX	60n	650m	0.0	5.0	.80	2.0Ø	100uΔ	5.5	5	C	PROM	B412	DL16a
109	IM5623AMFE	256	4	SE	BTX	60n	650m	0.0	5.0	.80	2.0Ø	100uΔ	5.5	5	C	PROM	B412	FL27
110	IM5623AMJE	256	4	SE	BTX	60n	439u%	0.0	5.0	.80	2.0Ø	100uΔ	5.5	5	C	PROM	B412	DL16ej

SYMBOLS AND CODES EXPLAINED IN INTERPRETER

3. READ ONLY MEMORIES (ROMS)

IN ORDER OF (1)No.WDS(2)No.BITS/WD(3)OP.MODE PRG.CODE(4)STRUCT.(5)MAX ACC.TIME(6)TYPE No.

LINE No.	6 TYPE NUMBER	ORGANIZATION 1 NO. WORDS	2 BITS PER WORD	3 OP MODE PROG CODE	4 STRUC-TURE CODE	5 MAX. ACCESS TIME (S)	MAX. POWER DISS. (W)	POWER SUPPLY SPAN NEG. (V)	POS. (V)	INPUT LOGIC LEVELS MAX. '0' (V)	MIN. '1' (V)	MIN.OUTPUT SINK CURRENT (A)	@ OUT (V)	OPER TEMP RNGE CODE -	+	GENERAL DESCRIPTION	DRAWINGS FUNCTIONAL EQUIVALENT NUMBER	OUTLINE
1	IM5623CDE	256	4	SE	BTX	60n	650m	0.0	5.0	.80	2.0Ø	16m	.45	0	7	PROM	B82	DL16ak
2	IM5623CFE	256	4	SE	BTX	60n	650m	0.0	5.0	.80	2.0Ø	16m	.30	0	7	PROM	B82	FL76
3	IM5623CJE	256	4	SE	BTX	60n	650m	0.0	5.0	.80	2.0Ø	16m	.30	0	7	PROM	B82	DL16ej
4	IM5623CPE	256	4	SE	BTX	60n	650m	0.0	5.0	.80	2.0Ø	16m	.30	0	7	PROM	B82	DL16bn
5	IM5623MDE	256	4	SE	BTX	60n	650m	0.0	5.0	.80	2.0Ø	16m	.45	5	C	PROM	B82	DL16ak
6	IM5623MFE	256	4	SE	BTX	60n	650m	0.0	5.0	.80	2.0Ø	16m	.45	5	C	PROM	B82	FL76
7	IM5623MJE	256	4	SE	BTX	60n	650m	0.0	5.0	.80	2.0Ø	16m	.30	5	C	PROM	B82	DL16ej
8	MB7052	256	4	SE	BTX	60n	690m	0.0	5.0	.80	2.0§	16m	.45	0	7	PROM	B82	ML4k
9	MB7052P	256	4	SE	BTX	60n		0.0	5.0	.80	2.0§	16m	.45	0	7	PROM	B82	DL16es
10	MB7052Z	256	4	SE	BTX	60n		0.0	5.0	.80	2.0§	16m	.45	0	7	PROM	B82	DL16go
11	MB7057	256	4	SE	BTX	60n	690m	0.0	5.0	.80	2.0Δ	16m	.45	0	7	PROM	B82	ML4k
12	MB7057P	256	4	SE	BTX	60n		0.0	5.0	.80	2.0Δ	16m	.45	0	7	PROM	B82	DL16es
13	MB7057Z	256	4	SE	BTX	60n		0.0	5.0	.80	2.0Δ	16m	.45	0	7	PROM	B82	DL16go
14	N8226E	256	4	SE	BTX	60n	850m	0.0	5.0	.85	2.0	16m	.50	0	7		B68	ML61c
15	N8229E	256	4	SE	BTX	60n	850m	0.0	5.0	.85	2.0§	16m	.50	0	7		B68	ML61c
16	S8226E	256	4	SE	BTX	60n	850m	0.0	5.0	.85	2.0	16m	.50	5	C		B68	ML61c
17	S8229E	256	4	SE	BTX	60n	850m	0.0	5.0	.85	2.0§	16m	.50	5	C		B68	ML61c
18	93416DC	256	4	SE	BTX	70n	650m	0.0	5.0	.80	2.0	16m	.45	0	7	Field Prog	B80	DL16n
19	93426DC	256	4	SE	BTX	70n	650m	0.0	5.0	.80	2.0§	16m	.45	0	7	Field Prog	B123	DL16n
20	IM5603MDE	256	4	SE	BTX	70n	500m	0.0	5.0	.85	2.0	20m	.40	5	C		PN16bz	DL16a
21	IM5603MPE	256	4	SE	BTX	70n	500m	0.0	5.0	.85	2.0	20m	.40	5	C		PN16bz	DL16bv
22	93416DM	256	4	SE	BTX	80n	650m	0.0	5.0	.80	2.0	16m	.45	5	C	Field Prog	B123	DL16n
23	93426DM	256	4	SE	BTX	80n	650m	0.0	5.0	.80	2.0§	16m	.45	5	C	Field Prog	B123	DL16n
24	DM7573J	256	4	SE	BTX	80n	550m	0.0	5.0	.80	2.0	16m	.40	5	C	PROM	B80	DL16cr
25	DM8573J	256	4	SE	BTX	80n	550m	0.0	5.0	.80	2.0	16m	.40	0	7	PROM	B80	DL16cr
26	DM8573N	256	4	SE	BTX	80n	550m	0.0	5.0	.80	2.0	16m	.40	0	7	PROM	B80	DL16bh
27	IM5603AMDE	256	4	SE	BTX	80n	650m	0.0	5.0	.80	2.0	100uΔ	5.5	5	C	PROM	B412	DL16a
28	IM5603AMFE	256	4	SE	BTX	80n	650m	0.0	5.0	.80	2.0	100uΔ	5.5	5	C	PROM	B412	FL27
29	IM5603CDE	256	4	SE	BTX	80n	500m	0.0	5.0	.85	2.0	16m	.45	0	7		B82	DL16a
30	DM8574N	256	4	SE	BTX	85n	550m	0.0	5.0	.80	2.0§	16m	.40	0	7	Field Program	B80	DL16bh
31	HM9-6611A9	256	4	SE	MCG	250n	2.5m♦	0.0	10	1.8	7.7	2.0m	1.0	4	8	Fld Prog Prom	B375	FL54
32	HM6661A9	256	4	SE	MCG	250n	150m	0.0	10	2.0	7.0§			4	8	PROM		
33	HM1-6610-2	256	4	SE	MCG	300n	500u♦	0.0	5.0	.80	3.0Δ	2.0m	.40	5	C	Fld Prog-Prom	B207	DLØ
34	HM1-6610-9	256	4	SE	MCG	300n	500u♦	0.0	5.0	.80	3.0Δ	2.0m	.40	4	8	Fld Prog-Prom	B207	DLØ
35	HM1-6610B2	256	4	SE	MCG	300n	50u♦	0.0	5.0	.80	3.0Δ	2.0m	.40	5	C	Fld Prog-Prom	B207	DLØ
36	HM1-6610B9	256	4	SE	MCG	300n	50u♦	0.0	5.0	.80	3.0Δ	2.0m	.40	4	8	Fld Prog-Prom	B207	DLØ
37	HM1-6611B2	256	4	SE	MCG	300n	50u♦	0.0	5.0	.80	3.0§	2.0m	.40	5	C	Fld Prog-Prom	B207	DLØ
38	HM1-6611B9	256	4	SE	MCG	300n	50u♦	0.0	5.0	.80	3.0§	2.0m	.40	4	8	Fld Prog-Prom	B207	DLØ
39	HM1-6612-2	256	4	SE	MCG	300n	500u♦	0.0	5.0	.80	3.0§	2.0m	.40	5	C	Fld Prog-Prom	B207	DLØ
40	HM1-6612-9	256	4	SE	MCG	300n	500u♦	0.0	5.0	.80	3.0§	2.0m	.40	4	8	Fld Prog-Prom	B207	DLØ
41	HM1-6612B2	256	4	SE	MCG	300n	50u♦	0.0	5.0	.80	3.0§	2.0m	.40	5	C	Fld Prog-Prom	B207	DLØ
42	HM1-6612B9	256	4	SE	MCG	300n	50u♦	0.0	5.0	.80	3.0§	2.0m	.40	4	8	Fld Prog-Prom	B207	DLØ
43	HM9-6610-2	256	4	SE	MCG	300n	500u♦	0.0	5.0	.80	3.0Δ	2.0m	.40	5	C	Fld Prog-Prom	B207	FLØ
44	HM9-6610-9	256	4	SE	MCG	300n	500u♦	0.0	5.0	.80	3.0Δ	2.0m	.40	4	8	Fld Prog-Prom	B207	FLØ
45	HM9-6610B2	256	4	SE	MCG	300n	50u♦	0.0	5.0	.80	3.0Δ	2.0m	.40	5	C	Fld Prog-Prom	B207	FLØ
46	HM9-6610B9	256	4	SE	MCG	300n	50u♦	0.0	5.0	.80	3.0Δ	2.0m	.40	4	8	Fld Prog-Prom	B207	FLØ
47	HM9-6611B2	256	4	SE	MCG	300n	50u♦	0.0	5.0	.80	3.0§	2.0m	.40	5	C	Fld Prog-Prom	B207	FLØ
48	HM9-6611B9	256	4	SE	MCG	300n	50u♦	0.0	5.0	.80	3.0§	2.0m	.40	4	8	Fld Prog-Prom	B207	FLØ
49	HM9-6612-2	256	4	SE	MCG	300n	500u♦	0.0	5.0	.80	3.0§	2.0m	.40	5	C	Fld Prog-Prom	B207	FLØ
50	HM9-6612-9	256	4	SE	MCG	300n	500u♦	0.0	5.0	.80	3.0§	2.0m	.40	4	8	Fld Prog-Prom	B207	FLØ
51	HM9-6612B2	256	4	SE	MCG	300n	50u♦	0.0	5.0	.80	3.0§	2.0m	.40	5	C	Fld Prog-Prom	B207	FLØ
52	HM9-6612B9	256	4	SE	MCG	300n	50u♦	0.0	5.0	.80	3.0§	2.0m	.40	4	8	Fld Prog-Prom	B207	FLØ
53	HM6611A9	256	4	SE	MCG	400n	25m	0.0	10	2.0	7.0§			4	8	PROM	B375	
54	HM6661-9	256	4	SE	MCG	400n	25m	0.0	5.0	.80	3.0§			4	8	PROM		
55	HM6611-9	256	4	SE	MCG	500n	10m	0.0	5.0	2.0	3.0§			4	8	PROM	B375	
56	HM1-6610D5	256	4	SE	MCG	550n	4.0m♦	0.0	5.0	.80	3.0Δ	2.0m	.40	0	7	Fld Prog-Prom	B207	DLØ
57	HM1-6612D5	256	4	SE	MCG	550n	4.0m♦	0.0	5.0	.80	3.0§	2.0m	.40	0	7	Fld Prog-Prom	B207	DLØ
58	ER1105	256	4	SE	MPN	2.0u	288m	12	12	3.0	10.5	3.4m	11.5	2	7	Non-Vol EAROM	B235	DL24ck
59	NC7050	256	4	SE	MXN	1.0u	900m	15	15	1.0	14§	1.6m	.40	0	7	Non-Vol EAROM	B241	DL24h
60	MD6210	256	5	SC	BTC	50n	625m	0.0	5.5	.85	2.0	15m	.45	0	7		B52	DL16ek
61	MD5210	256	5	SC	BTC	60n	625m	0.0	5.5	.80	2.0	10m	.40	5	C		B52	DL16ek
62	6210-1F	256	5	SC	BTD	100n	850m	0.0	5.0	.80	2.0Δ	15m	.50	0	7	ROM	PN16cq	FL49
63	6210-1J	256	5	SC	BTD	100n	850m	0.0	5.0	.80	2.0Δ	15m	.50	0	7	ROM	PN16cq	DL16bi
64	6210-1N	256	5	SC	BTD	100n	850m	0.0	5.0	.80	2.0Δ	15m	.50	0	7	ROM	PN16cq	DL16dj
65	5210-1F	256	5	SC	BTD	175n	850m	0.0	5.0	.80	2.0Δ	10m	.50	5	C	ROM	PN16cq	FL49
66	5210-1J	256	5	SC	BTD	175n	850m	0.0	5.0	.80	2.0Δ	10m	.50	5	C	ROM	PN16cq	DL16bi
67	5210-1N	256	5	SC	BTD	175n	850m	0.0	5.0	.80	2.0Δ	10m	.50	5	C	ROM	PN16cq	DL16dj
68	5210D	256	5	SC	BTX	60n	625m	0.0	5.0	.80	2.0	10m	.45	5	C		PN16bu	DL16v
69	5210J	256	5	SC	BTX	60n	625m	0.0	5.0	.80	2.0	10m	.45	5	C		PN16bu	DL16da
70	5210N	256	5	SC	BTX	60n	625m	0.0	5.0	.80	2.0	10m	.45	5	C		PN16bu	DL16da
71	6210D	256	5	SC	BTX	75n	625m	0.0	5.0	.80	2.0	16m	.45	0	7		PN16bu	DL16v
72	6210J	256	5	SC	BTX	75n	625m	0.0	5.0	.80	2.0	16m	.45	0	7		PN16bu	DL16da
73	6210N	256	5	SC	BTX	75n	625m	0.0	5.0	.80	2.0	16m	.45	0	7		PN16bu	DL16da
74	TMS2900JC#1	256	5	SC	MXX	400n	400m	12	5.0	1.0	3.5§	3.2m	.80	2	8		B66a	ML47d
75	TMS2900NC#1	256	5	SC	MXX	400n	400m	12	5.0	1.0	3.5§	3.2m	.80	2	8		B66a	DL24bu
76	6246	256	8		BXD	60n	850m	0.0	5.0	.80	2.0	10m	.50	0	7		B127	ML47c
77	5246	256	8		BXD	75n	850m	0.0	5.0	.80	2.0	8.0m	.50	5	C		B127	ML47c
78	1301#2	256	8	DC	MPG	650n	700mØ	9.0	5.0	.80	3.0	1.6m	.45	0			B18a	ML34
79	MF1301#2	256	8	DC	MPG	650n	1.0 Ø	9.0	5.0	.80	3.0	1.6m	.45	0	7		B18a	ML34
80	MCS1007	256	8	DC	MPX	20u	180m	12	5.0	.80	3.5	1.6m	.40	2	8	KE 64 key	B113	ML14b
81	M210M1AA	256	8	DC	MXX		450m			-2.0	-10			0	7			
82	1601#2	256	8	DE	MPG	650n	700mØ	9.0	5.0	.80	3.0	1.6m	.45	0	7		B18	ML34
83	1701#2	256	8	DE	MPG	650n	700mØ	9.0	5.0	.80	3.0	1.6m	.45	0	7		B18	ML34b
84	MF1601#1	256	8	DE	MPG	650n	1.0 Ø	9.0	5.0	.80	3.0	1.6m	.45	0	7		B18	ML34
85	MF1701#1	256	8	DE	MPG	650n	1.0 Ø	9.0	5.0	.80	3.0	1.6m	.45	0	7		B18	ML34b
86	C1602	256	8	DE	MPG	1.0u	500m	20	.50	2.0	4.2	1.6m	.45	0	8			DLØ
87	C1702	256	8	DE	MPG	1.0u	500m	20	5.0	2.0	4.2	1.6m	.45	0	8			DLØ
88	CDP18U42CD	256	8	S	MNG	1.0u	20m†	0.0	5.0	1.5	3.5§	1.6m	0.4	4	8	EPROM	A498	
89	CDP1842CD	256	8	S	MNG	1.0u	20m†	0.0	5.0	.05	4.95§	1.4m	0.4	4	8	EEPROM	A498	
90	S8502	256	8	SC		1.0u	510m	12	5.0	.40	4.0			0	7		B31a	ML44
91	DM54S271N	256	8	SC	BTD	35n	750m	0.0	5.0	.80	2.0Δ	16m	.50	5	C		B134	DL20r
92	DM54S371N	256	8	SC	BTD	35n	750m	0.0	5.0	.80	2.0§	16m	.50	5	C		B134	DL20r
93	DM72S04J	256	8	SC	BTD	35n	850m	0.0	5.0	.80	2.0§	12m	.50	5	C		B244	ML183a
94	DM74S271N	256	8	SC	BTD	35n	750m	0.0	5.0	.80	2.0Δ	16m	.50	0	7		B134	DL20r
95	DM74S371N	256	8	SC	BTD	35n	750m	0.0	5.0	.80	2.0§	16m	.50	0	7		B134	DL20r
96	DM75S202N	256	8	SC	BTD	35n	825m	0.0	5.0	.80	2.0§	12m	.50	5	C		B243	DL20r
97	DM82S04J	256	8	SC	BTD	35n	850m	0.0	5.0	.80	2.0§	12m	.45	0	7		B244	ML183a
98	DM82S04N	256	8	SC	BTD	35n	850m	0.0	5.0	.80	2.0§	12m	.45	0	7		B244	DL24au
99	DM85S202N	256	8	SC	BTD	35n	825m	0.0	5.0	.80	2.0§	12m	.45	0	7		B243	DL20r
100	DM74S271J	256	8	SC	BTD	60n	750m	0.0	5.0	.80	2.0Δ	16m	.45	0	7	ROM	B365	DLØ
101	DM74S371J	256	8	SC	BTD	60n	750m	0.0	5.0	.80	2.0§	16m	.45	0	7	ROM	B365	DLØ
102	DM87S201J	256	8	SC	BTD	60n	750m	0.0	5.0	.80	2.0Δ	16m	.45	0	7	With Latch	B369	DLØ
103	DM87S201N	256	8	SC	BTD	60n	750m	0.0	5.0	.80	2.0Δ	16m	.45	0	7	With Latch	B369	DL20r
104	DM87S202J	256	8	SC	BTD	60n	750m	0.0	5.0	.80	2.0§	16m	.45	0	7	With Latch	B369	DLØ
105	DM87S202N	256	8	SC	BTD	60n	750m	0.0	5.0	.80	2.0§	16m	.45	0	7	With Latch	B369	DL20r
106	6208-1J	256	8	SC	BTD	70n	775m	0.0	5.0	.80	2.0Δ	16m	.50	0	7	ROM	PN20i	DL20q
107	6208-1N	256	8	SC	BTD	70n	775m	0.0	5.0	.80	2.0Δ	16m	.50	0	7	ROM	PN20i	DL20p
108	6209-1J	256	8	SC	BTD	70n	775m	0.0	5.0	.80	2.0§	16m	.50	0	7	ROM	PN20i	DL20q
109	6209-1N	256	8	SC	BTD	70n	775m	0.0	5.0	.80	2.0§	16m	.50	0	7	ROM	PN20i	DL20p
110	DM54S271J	256	8	SC	BTD	75n	750m	0.0	5.0	.80	2.0Δ	16m	.45	5	C	ROM	B365	DLØ

SYMBOLS AND CODES EXPLAINED IN INTERPRETER

3. READ ONLY MEMORIES (ROMS)

IN ORDER OF (1)No.WDS(2)No.BITS/WD(3)OP.MODE PRG.CODE(4)STRUCT.(5)MAX ACC.TIME(6)TYPE No.

LINE No.	6 TYPE NUMBER	ORGANIZATION 1 NO. WORDS	2 BITS PER WORD	3 OP MODE PROG CODE	4 STRUC-TURE CODE	5 MAX. ACCESS TIME (S)	MAX. POWER DISS. (W)	POWER SUPPLY SPAN NEG. (V)	POS. (V)	INPUT LOGIC LEVELS MAX. '0' (V)	MIN. '1' (V)	MIN.OUTPUT SINK CURRENT (A)	@ OUT (V)	OPER TEMP RNGE CODE -	+	GENERAL DESCRIPTION	DRAWINGS FUNCTIONAL EQUIVALENT NUMBER	OUTLINE
1	DM54S371J	256	8	SC	BTD	75n	750m	0.0	5.0	.80	2.0§	16m	.45	5	C	ROM	B365	DL∅
2	DM77S201J	256	8	SC	BTD	75n	750m	0.0	5.0	.80	2.0Δ	16m	.45	5	C	With Latch	B369	DL∅
3	DM77S202J	256	8	SC	BTD	75n	750m	0.0	5.0	.80	2.0§	16m	.45	5	C	With Latch	B369	DL∅
4	5208-1J	256	8	SC	BTD	80n	775m	0.0	5.0	.80	2.0Δ	12m	.50	5	C	ROM	PN20i	DL20q
5	5208-1N	256	8	SC	BTD	80n	775m	0.0	5.0	.80	2.0Δ	12m	.50	5	C	ROM	PN20i	DL20p
6	5209-1J	256	8	SC	BTD	80n	775m	0.0	5.0	.80	2.0§	12m	.50	5	C	ROM	PN20i	DL20q
7	5209-1N	256	8	SC	BTD	80n	775m	0.0	5.0	.80	2.0§	12m	.50	5	C	ROM	PN20i	DL20p
8	RC82S214I	256	8	SC	BTD	90n	925m	0.0	5.0	.80	2.0§	9.6m	.50	5	C		B199b	DL24f
9	6235-1F	256	8	SC	BTD	100n	850m	0.0	5.0	.80	2.0Δ	10m	.50	0	7	ROM	PN24eh	FL50
10	6235-1J	256	8	SC	BTD	100n	850m	0.0	5.0	.80	2.0Δ	10m	.50	0	7	ROM	PN24eh	DL24cn
11	6235-1N	256	8	SC	BTD	100n	850m	0.0	5.0	.80	2.0Δ	10m	.50	0	7	ROM	PN24eh	DL24co
12	6236-1F	256	8	SC	BTD	100n	875m	0.0	5.0	.80	2.0§	10m	.50	0	7	ROM	PN24eh	FL50
13	6236-1J	256	8	SC	BTD	100n	875m	0.0	5.0	.80	2.0§	10m	.50	0	7	ROM	PN24eh	DL24cn
14	6236-1N	256	8	SC	BTD	100n	875m	0.0	5.0	.80	2.0§	10m	.50	0	7	ROM	PN24eh	DL24co
15	5235-1F	256	8	SC	BTD	175n	850m	0.0	5.0	.80	2.0Δ	8.0m	.50	5	C	ROM	PN24eh	FL50
16	5235-1J	256	8	SC	BTD	175n	850m	0.0	5.0	.80	2.0Δ	8.0m	.50	5	C	ROM	PN24eh	DL24cn
17	5235-1N	256	8	SC	BTD	175n	850m	0.0	5.0	.80	2.0Δ	8.0m	.50	5	C	ROM	PN24eh	DL24co
18	5236-1F	256	8	SC	BTD	175n	875m	0.0	5.0	.80	2.0§	8.0m	.50	5	C	ROM	PN24eh	FL50
19	5236-1J	256	8	SC	BTD	175n	875m	0.0	5.0	.80	2.0§	8.0m	.50	5	C	ROM	PN24eh	DL24cn
20	5236-1N	256	8	SC	BTD	175n	875m	0.0	5.0	.80	2.0§	8.0m	.50	5	C	ROM	PN24eh	DL24co
21	S8204Y	256	8	SC	BTX	60n	895m	0.0	5.0	.85	2.0§	9.6m	.45	5	C		B32a	ML21b
22	MM5215	256	8	SC	BTX	75n	600m	0.0	5.0	.80	2.0	10m	.40	5	C		B83	ML47c
23	MM5216	256	8	SC	BTX	75n	600m	0.0	5.0	.80	2.0§	10m	.40	5	C		B83	ML47c
24	MM6215	256	8	SC	BTX	75n	600m	0.0	5.0	.85	2.0	15m	.45	0	7		B83	ML47c
25	MM6216	256	8	SC	BTX	75n	600m	0.0	5.0	.85	2.0§	15m	.45	0	7		B83	ML47c
26	4735BDC	256	8	SC	MCX	152n	15m♦	0.0	10	3.0	7.0§	1.2m	.50	4	8	ROM	B273	DL24cf
27	4735BDM	256	8	SC	MCX	152n	15m♦	0.0	10	3.0	7.0§	1.2m	.50	5	C	ROM	B273	DL24cf
28	4735BFC	256	8	SC	MCX	152n	15m♦	0.0	10	3.0	7.0§	1.2m	.50	4	8	ROM	B273	FL47
29	4735BFM	256	8	SC	MCX	152n	15m♦	0.0	10	3.0	7.0§	1.2m	.50	5	C	ROM	B273	FL47
30	4735BPC	256	8	SC	MCX	152n	15m♦	0.0	10	3.0	7.0§	1.2m	.50	4	8	ROM	B273	DL24ci
31	uPD464C	256	8	SC	MNX	450n	810m	0.0	12	.70	2.4§	1.7m	.50	1	7		B220a	DL24bx
32	uPD464D	256	8	SC	MNX	450n	810m	0.0	12	.70	2.4§	1.7m	.50	1	7		B220a	DL24bj
33	SFF70611KM#1	256	8	SC	MPA	700n	430m	12	5.0	.80	3.0	2.0m†	6.0	5	C		B119	DL24w
34	SFF70611KT#1	256	8	SC	MPA	700n	430m	12	5.0	.80	3.0	2.0m†	1.0	2	8		B119	DL24w
35	CRC3002-1-3#2	256	8	SC	MPC	1.5u	270mØ	12	12	.40♦	2.5			0	7		B5	DL24bd
36	CRC3002-1-3XXX#1	256	8	SC	MPC	1.5u	270mØ	12	12	.40♦	2.5			0	7	Avail.Std.Pr.	B5	ML13a
37	CRC3002-2-3#2	256	8	SC	MPC	1.5u	270mØ	12	12	.40♦	2.5			0	7		B5	FL10
38	CRC3002-2-3XXX#1	256	8	SC	MPC	1.5u	270mØ	12	12	.40♦	2.5			0	7	Avail.Std.Pr.	B5	FL10
39	MK3602P-1	256	8	SC	MPG	550n	2.0 ∅	9.0	5.0	.65	3.0§	1.0uΔ	0.0	0	7	Non-Erasable	B208	DL24dd
40	MK3702T-1	256	8	SC	MPG	550n	2.0 ∅	9.0	5.0	.65	3.0§	1.0uΔ	0.0	0	7	Erasable Prom	B208	DL24dd
41	MK3602P-2	256	8	SC	MPG	750n	2.0 ∅	9.0	5.0	.65	3.0§	1.0uΔ	0.0	0	7	Non-Erasable	B208	DL24dd
42	MK3702T-2	256	8	SC	MPG	750n	2.0 ∅	9.0	5.0	.65	3.0§	1.0uΔ	0.0	0	7	Erasable Prom	B208	DL24dd
43	MF1301#1	256	8	SC	MPG	900n	1.0 ∅	9.0	5.0	.80	3.0	1.6m	.45	0	7		B18a	ML34
44	1301#1	256	8	SC	MPG	1.0u	700mØ	9.0	5.0	.80	3.0	1.6m	.45	0	7		B18a	
45	C1302	256	8	SC	MPG	1.0u	2.0 ∅	9.0	5.0	1.0	3.0§	1.6m	.45	0	7		B18a	DL24bk
46	MK3602P-3	256	8	SC	MPG	1.0u	2.0 ∅	9.0	5.0	.65	3.0§	1.0uΔ	0.0	0	7	Non-Erasable	B208	DL24dd
47	MK3702T-3	256	8	SC	MPG	1.0u	2.0 ∅	9.0	5.0	.65	3.0§	1.0uΔ	0.0	0	7	Erasable Prom	B208	DL24dd
48	P1302	256	8	SC	MPG	1.0u	2.0 ∅	9.0	5.0	.65	3.0§	1.6m	.45	0	7		B18a	DL24aj
49	MCS2012	256	8	SC	MPN	800n	450mØ	12	5.0	.80	3.5			2	8		PN24y	DL∅
50	RO5-1302	256	8	SC	MPN	1.5u		12	5.0	.80	3.5§	1.6m	.40	0	7		B233	DL24ck
51	RO6-2048/8	256	8	SC	MPN	1.5u		12	5.0	.80	3.5§	1.6m	.40	5	C		B233d	ML34e
52	RO7-2048/8	256	8	SC	MPN	1.5u		12	5.0	.80	3.5§	1.6m	.40	0	7		B233d	DL24ck
53	RO1-2048#4	256	8	SC	MPT	750n	120m†	24	0.0	-2.0	-24	3.0m		5	8		B49	ML47
54	TMS4600JC	256	8	SC	MPX	55n		20	0.0	-1.0	-10			2	8		B41	ML49
55	N2430Y#1	256	8	SC	MPX	500n	1.1 ∅	12	12	10*	4.0			2	7		B26	ML21b
56	N2431Y#1	256	8	SC	MPX	500n	1.1 ∅	12	12	10*	4.0			2	7		B26	ML21b
57	N2435Y#1	256	8	SC	MPX	500n	1.1 ∅	12	12	10*	4.0			2	7		B26b	ML21b
58	N2436Y#1	256	8	SC	MPX	500n	1.1 ∅	12	12	10*	4.0			2	7		B26b	ML21b
59	MM4230D#1	256	8	SC	MPX	725n	480mØ	12	12	10*	4.0			5	C		B26	DL24ay
60	MM4230J#1	256	8	SC	MPX	725n	480mØ	12	12	10*	4.0			5	C		B26	DL24cc
61	MM5230D#1	256	8	SC	MPX	725n	480mØ	12	12	10*	4.0			2	7		B26	DL24ay
62	IM7603CDG	256	8	SC	MPX	750n	380mØ	0.0	12	10*	4.0	3.0m	3.0	0	7		B3	ML27
63	MM5213	256	8	SC	MPX	750n	650m		5.0	12								
64	MCM1110LA#1	256	8	SC	MPX	800n	600mØ	24	0.0	0.0†	-12	10uΔ	-12	2	8		B75	DL24w
65	MCM1110LC	256	8	SC	MPX	800n	600mØ	24	0.0	0.0†	-12	10uΔ	-12	2	8		B75	DL24w
66	MM4213D#1	256	8	SC	MPX	850n	175mØ	12	5.0	1.0*	3.0§			5	C		B26	DL24ay
67	MM4213J#1	256	8	SC	MPX	850n	175mØ	12	5.0	1.0*	3.0§			5	C		B26	DL24cc
68	MM4213N#1	256	8	SC	MPX	850n	175mØ	12	5.0	1.0*	3.0§			5	C		B26	DL24af
69	MM5213D#1	256	8	SC	MPX	850n	175mØ	12	5.0	1.0*	3.0§			2	7		B26	DL24ay
70	MM5213J#1	256	8	SC	MPX	850n	175mØ	12	5.0	1.0*	3.0§			2	7		B26	DL24cc
71	MM5213N#1	256	8	SC	MPX	850n	175mØ	12	5.0	1.0*	3.0§			2	7		B26	DL24af
72	MM4231D#1	256	8	SC	MPX	950n	510mØ	12	5.0	3.0*	.80			5	C		B26	DL24ay
73	MM4231J#1	256	8	SC	MPX	950n	510mØ	12	5.0	3.0*	.80			5	C		B26	DL24cc
74	MM5231D#1	256	8	SC	MPX	950n	510mØ	12	5.0	3.0*	.80			2	7		B26	DL24ay
75	MM5231J#1	256	8	SC	MPX	950n	510mØ	12	5.0	3.0*	.80			2	7		B26	DL24cc
76	MM5231N#1	256	8	SC	MPX	950n	510mØ	12	5.0	3.0*	.80			2	7		B26	DL24au
77	IM7603MDG	256	8	SC	MPX	1.0u	380mØ	0.0	12	10*	4.0	3.0m	3.0	5	C		B3	ML27
78	MM423#1	256	8	SC	MPX	1.0u	420mØ	12	12	9.5*	5.0			5	C		B26	ML30b
79	MM523#1	256	8	SC	MPX	1.0u	420mØ	12	12	9.5*	5.0			2	7		B26	ML30b
80	MM4224D#1	256	8	SC	MPX	1.0u	480m♦	15	5.0	.80	2.4§	1.6m	.40	5	C		B9a	ML130
81	MM4225D#1	256	8	SC	MPX	1.0u	480m♦	15	5.0	.80	2.4§	1.6m	.40	5	C		B9a	ML130
82	MM5224D#1	256	8	SC	MPX	1.0u	480m♦	15	5.0	.80	2.4§	1.6m	.40	2	7		B9a	ML130
83	MM5225D#1	256	8	SC	MPX	1.0u	480m♦	15	5.0	.80	2.4§	1.6m	.40	2	7		B9a	ML130
84	RO1-2048S#1	256	8	SC	MPX	2.0u	275m†	12	12	10*	4.0	2.5m	2.4	0	7		B26	
85	uPD502D	256	8	SC	MPX	4.0u		24	0.0	-2.5%	-9.0			1	7		B218	DL24bh
86	HN3200P	256	8	SC	MPX	7.0u	70m†	14	0.0	-2.0	-5.4			2	7		B79	ML88a
87	MC1182L	256	8	SC	MPX	20u	550m	15	0.0	-8.0	-2.0			0	7	Rhythm Pattern	B102	ML95a
88	TMS2600JC#1	256	8	SC	MXX	900n	170m†	12	12	-3.0	-8.0			2	8		PN24w	ML47b
89	UA2548#1	256	8	SC	MXX	900n	600m	20	0.0	.80♦	2.7	1.6m	.40	5	C		B9a	DL24ay
90	UA3548#1	256	8	SC	MXX	900n	600m	20	0.0	.80♦	2.7	1.6m	.40	2	7		B9a	DL24ay
91	TMS2600NC#2	256	8	SC	MXX	1.0u	180m†	12	12	-3.0	-8.0			2	8		PN24w	DL24bu
92	MC1702A	256	8	SE		850n		9.0	5.0	.45%	3.5§	1.6m	.45	5	A	Erasable PROM	PN24ak	DL24bp
93	53RA281J	256	8	SE	BTD	30n	550m†	0.0	5.0	.80	2.0	16m	.50	5	C	PROM;Reg	B329	DL24cn
94	53RA281N	256	8	SE	BTD	30n	550m†	0.0	5.0	.80	2.0	16m	.50	5	C	PROM;Reg	B329	DL24co
95	53RA283J	256	8	SE	BTD	30n	550m†	0.0	5.0	.80	2.0	16m	.50	5	C	PROM;Reg	B329	ML282
96	53RA283N	256	8	SE	BTD	30n	550m†	0.0	5.0	.80	2.0	16m	.50	5	C	PROM;Reg	B329	DL24bi
97	53S280J	256	8	SE	BTD	30n	525m†	0.0	5.0	.80	2.0Δ	16m	.50	5	C	PROM	PN20i	DL20q
98	53S280N	256	8	SE	BTD	30n	525m†	0.0	5.0	.80	2.0Δ	16m	.50	5	C	PROM	PN20i	DL20p
99	53S281J	256	8	SE	BTD	30n	525m†	0.0	5.0	.80	2.0§	16m	.50	5	C	PROM	PN20i	DL20q
100	53S281N	256	8	SE	BTD	30n	525m†	0.0	5.0	.80	2.0§	16m	.50	5	C	PROM	PN20i	DL20p
101	63RA281J	256	8	SE	BTD	30n	550m†	0.0	5.0	.80	2.0	20m	.50	0	7	PROM;Reg	B329	DL24cn
102	63RA281N	256	8	SE	BTD	30n	550m†	0.0	5.0	.80	2.0	20m	.50	0	7	PROM;Reg	B329	DL24co
103	63RA283J	256	8	SE	BTD	30n	550m†	0.0	5.0	.80	2.0	20m	.50	0	7	PROM;Reg	B329	ML282
104	63RA283N	256	8	SE	BTD	30n	550m†	0.0	5.0	.80	2.0	20m	.50	0	7	PROM;Reg	B329	DL24bi

SYMBOLS AND CODES EXPLAINED IN INTERPRETER

3. READ ONLY MEMORIES (ROMS)

IN ORDER OF (1)No.WDS(2)No.BITS/WD(3)OP.MODE PRG.CODE(4)STRUCT.(5)MAX ACC.TIME(6)TYPE No.

LINE No.	6 TYPE NUMBER	ORGANIZATION 1 NO. WORDS	2 BITS PER WORD	3 OP MODE PROG CODE	4 STRUC-TURE CODE	5 MAX. ACCESS TIME (S)	MAX. POWER DISS. (W)	POWER SUPPLY SPAN NEG. (V)	POS. (V)	INPUT LOGIC LEVELS MAX. '0' (V)	MIN. '1' (V)	MIN.OUTPUT SINK CURRENT (A)	@ OUT (V)	OPER TEMP RNGE CODE -	+	GENERAL DESCRIPTION	DRAWINGS FUNCTIONAL EQUIVALENT NUMBER	OUTLINE
1	63S280J	256	8	SE	BTD	30n	525m†	0.0	5.0	.80	2.0Δ	16m	.45	0	7	PROM	PN20i	DL20q
2	63S280N	256	8	SE	BTD	30n	525m†	0.0	5.0	.80	2.0Δ	16m	.45	0	7	PROM	PN20i	DL20p
3	63S281J	256	8	SE	BTD	30n	525m†	0.0	5.0	.80	2.0§	16m	.45	0	7	PROM	PN20i	DL20q
4	63S281N	256	8	SE	BTD	30n	525m†	0.0	5.0	.80	2.0§	16m	.45	0	7	PROM	PN20i	DL20p
5	53PS280J	256	8	SE	BTD	33n	525m†	0.0	5.0	.80	2.0Δ	16m	.50	5	C	PROM;Pwr Sw	PN20i	DL20q
6	53PS280N	256	8	SE	BTD	33n	525m†	0.0	5.0	.80	2.0Δ	16m	.50	5	C	PROM;Pwr Sw	PN20i	DL20p
7	53PS281J	256	8	SE	BTD	33n	525m†	0.0	5.0	.80	2.0§	16m	.50	5	C	PROM;Pwr Sw	PN20i	DL20q
8	53PS281N	256	8	SE	BTD	33n	525m†	0.0	5.0	.80	2.0§	16m	.50	5	C	PROM;Pwr Sw	PN20i	DL20p
9	63PS280J	256	8	SE	BTD	33n	525m†	0.0	5.0	.80	2.0Δ	16m	.45	0	7	PROM;Pwr Sw	PN20i	DL20q
10	63PS280N	256	8	SE	BTD	33n	525m†	0.0	5.0	.80	2.0Δ	16m	.45	0	7	PROM;Pwr Sw	PN20i	DL20p
11	63PS281J	256	8	SE	BTD	33n	525m†	0.0	5.0	.80	2.0§	16m	.45	0	7	PROM;Pwr Sw	PN20i	DL20q
12	63PS281N	256	8	SE	BTD	33n	525m†	0.0	5.0	.80	2.0§	16m	.45	0	7	PROM;Pwr Sw	PN20i	DL20p
13	DM54S470N	256	8	SE	BTD	35n	750m	0.0	5.0	.80	2.0Δ	16m	.50	5	C	PROM	B134	DL20r
14	DM54S471N	256	8	SE	BTD	35n	750m	0.0	5.0	.80	2.0§	16m	.50	5	C	PROM	B134	DL20r
15	DM72S114D	256	8	SE	BTD	35n	990m	0.0	5.0	.80	2.0§	12m	.50	5	C	PROM	B244	DL24h
16	DM74S470N	256	8	SE	BTD	35n	750m	0.0	5.0	.80	2.0Δ	16m	.50	0	7	PROM	B134	DL20r
17	DM74S471N	256	8	SE	BTD	35n	750m	0.0	5.0	.80	2.0§	16m	.50	0	7	PROM	B134	DL20r
18	DM75S222N	256	8	SE	BTD	35n	825m	0.0	5.0	.80	2.0§	12m	.50	5	C	PROM	B243	DL20r
19	DM82S114D	256	8	SE	BTD	35n	990m	0.0	5.0	.80	2.0§	12m	.45	0	7	PROM	B244	DL24h
20	DM82S114N	256	8	SE	BTD	35n	990m	0.0	5.0	.80	2.0§	12m	.45	0	7	PROM	B244	DL24au
21	DM85S222N	256	8	SE	BTD	35n	825m	0.0	5.0	.80	2.0§	12m	.45	0	7	PROM	B243	DL20r
22	53LS280J	256	8	SE	BTD	51n	275m†	0.0	5.0	.80	2.0Δ	12m	.50	5	C	PROM	PN20i	DL20q
23	53LS280N	256	8	SE	BTD	51n	275m†	0.0	5.0	.80	2.0Δ	12m	.50	5	C	PROM	PN20i	DL20p
24	53LS281J	256	8	SE	BTD	51n	275m†	0.0	5.0	.80	2.0§	12m	.50	5	C	PROM	PN20i	DL20q
25	53LS281N	256	8	SE	BTD	51n	275m†	0.0	5.0	.80	2.0§	12m	.50	5	C	PROM	PN20i	DL20p
26	63LS280J	256	8	SE	BTD	51n	275m†	0.0	5.0	.80	2.0Δ	16m	.45	0	7	PROM	PN20i	DL20q
27	63LS280N	256	8	SE	BTD	51n	275m†	0.0	5.0	.80	2.0Δ	16m	.45	0	7	PROM	PN20i	DL20p
28	63LS281J	256	8	SE	BTD	51n	275m†	0.0	5.0	.80	2.0§	16m	.45	0	7	PROM	PN20i	DL20q
29	63LS281N	256	8	SE	BTD	51n	275m†	0.0	5.0	.80	2.0§	16m	.45	0	7	PROM	PN20i	DL20p
30	29602DC	256	8	SE	BTD	60n	850m	0.0	5.0	.80	2.0Δ	16m	.50	0	7	PROM;Pwr Sw	B310a	DL∅
31	29603DC	256	8	SE	BTD	60n	850m	0.0	5.0	.80	2.0§	16m	.50	0	7	PROM;Pwr Sw	B310a	DL∅
32	DM74S470J	256	8	SE	BTD	60n	750m	0.0	5.0	.80	2.0Δ	16m	.45	0	7	PROM	B365	DL∅
33	DM74S471J	256	8	SE	BTD	60n	750m	0.0	5.0	.80	2.0§	16m	.45	0	7	PROM	B365	DL∅
34	DM87S221J	256	8	SE	BTD	60n	750m	0.0	5.0	.80	2.0Δ	16m	.45	0	7	PROM W/Latch	B369	DL∅
35	DM87S221N	256	8	SE	BTD	60n	750m	0.0	5.0	.80	2.0Δ	16m	.45	0	7	PROM W/Latch	B369	DL20r
36	DM87S222J	256	8	SE	BTD	60n	750m	0.0	5.0	.80	2.0§	16m	.45	0	7	PROM W/Latch	B369	DL∅
37	DM87S222N	256	8	SE	BTD	60n	750m	0.0	5.0	.80	2.0§	16m	.45	0	7	PROM W/Latch	B369	DL20r
38	HM1-7625R5	256	8	SE	BTD	60n	925m	0.0	5.0	.85	2.0§	16m	.50	0	7	PROM,Latched	B388a	DL24du
39	HM3-7625R5	256	8	SE	BTD	60n	925m	0.0	5.0	.85	2.0§	16m	.50	0	7	PROM,Latched	B388a	DL24cp
40	HM9-7625R5	256	8	SE	BTD	60n	925m	0.0	5.0	.85	2.0§	16m	.50	0	7	PROM,Latched	B388a	FL55
41	N82S114F	256	8	SE	BTD	60n	165u†	0.0	5.0	.85	2.0§	9.6m	.45	0	7	PROM	B199	DL24cb
42	N82S114N	256	8	SE	BTD	60n	875m	0.0	5.0	.85	2.0§	9.6m	.45	0	7	PROM	B199	DL24ar
43	6308-1J	256	8	SE	BTD	70n	775m	0.0	5.0	.80	2.0Δ	16m	.50	0	7	PROM	PN20m	DL20q
44	6308-1N	256	8	SE	BTD	70n	775m	0.0	5.0	.80	2.0Δ	16m	.50	0	7	PROM	PN20m	DL20p
45	6309-1J	256	8	SE	BTD	70n	775m	0.0	5.0	.80	2.0§	16m	.50	0	7	PROM	PN20m	DL20q
46	6309-1N	256	8	SE	BTD	70n	775m	0.0	5.0	.80	2.0§	16m	.50	0	7	PROM	PN20m	DL20p
47	6335-1F	256	8	SE	BTD	70n	850m	0.0	5.0	.80	2.0Δ	12m	.50	0	7	PROM	PN24ei	FL50
48	6335-1N	256	8	SE	BTD	70n	850m	0.0	5.0	.80	2.0Δ	12m	.50	0	7	PROM	PN24ei	DL24co
49	6336-1F	256	8	SE	BTD	70n	850m	0.0	5.0	.80	2.0§	12m	.50	0	7	PROM	PN24ei	FL50
50	6336-1N	256	8	SE	BTD	70n	850m	0.0	5.0	.80	2.0§	12m	.50	0	7	PROM	PN24ei	DL24co
51	HM1-7629-5	256	8	SE	BTD	70n	850m	0.0	5.0	.80	2.0§	16m	.45	0	7	PROM	B159a	DL24du
52	HM3-7629-5	256	8	SE	BTD	70n	850m	0.0	5.0	.80	2.0§	16m	.45	0	7	PROM	B159a	DL24cp
53	HM9-7629-5	256	8	SE	BTD	70n	850m	0.0	5.0	.80	2.0§	16m	.45	0	7	PROM	B159a	FL55
54	29600DC	256	8	SE	BTD	75n	650m	0.0	5.0	.80	2.0Δ	16m	.50	0	7	PROM	B310	DL∅
55	29601DC	256	8	SE	BTD	75n	650m	0.0	5.0	.80	2.0§	16m	.50	0	7	PROM	B310	DL∅
56	29602DM	256	8	SE	BTD	75n	850m	0.0	5.0	.80	2.0Δ	16m	.50	5	C	PROM;Pwr Sw	B310a	DL∅
57	29603DM	256	8	SE	BTD	75n	850m	0.0	5.0	.80	2.0§	16m	.50	5	C	PROM;Pwr Sw	B310a	DL∅
58	DM54S470J	256	8	SE	BTD	75n	750m	0.0	5.0	.80	2.0Δ	16m	.45	5	C	PROM	B365	DL∅
59	DM54S471J	256	8	SE	BTD	75n	750m	0.0	5.0	.80	2.0§	16m	.45	5	C	PROM	B365	DL∅
60	DM77S221J	256	8	SE	BTD	75n	750m	0.0	5.0	.80	2.0Δ	16m	.45	5	C	PROM W/Latch	B369	DL∅
61	DM77S222J	256	8	SE	BTD	75n	750m	0.0	5.0	.80	2.0§	16m	.45	5	C	PROM W/Latch	B369	DL∅
62	5308-1N	256	8	SE	BTD	80n	775m	0.0	5.0	.80	2.0Δ	12m	.50	5	C	PROM	PN20m	DL20p
63	5309-1N	256	8	SE	BTD	80n	775m	0.0	5.0	.80	2.0§	12m	.50	5	C	PROM	PN20m	DL20p
64	5335-1F	256	8	SE	BTD	80n	850m	0.0	5.0	.80	2.0Δ	8.0m	.50	5	C	PROM	PN24ei	FL50
65	5335-1J	256	8	SE	BTD	80n	850m	0.0	5.0	.80	2.0Δ	8.0m	.50	5	C	PROM	PN24ei	DL24cn
66	5335-1N	256	8	SE	BTD	80n	850m	0.0	5.0	.80	2.0Δ	8.0m	.50	5	C	PROM	PN24ei	DL24co
67	5336-1F	256	8	SE	BTD	80n	850m	0.0	5.0	.80	2.0§	8.0m	.50	5	C	PROM	PN24ei	FL50
68	5336-1J	256	8	SE	BTD	80n	850m	0.0	5.0	.80	2.0§	8.0m	.50	5	C	PROM	PN24ei	DL24cn
69	5336-1N	256	8	SE	BTD	80n	850m	0.0	5.0	.80	2.0§	8.0m	.50	5	C	PROM	PN24ei	DL24co
70	HM1-7625R2	256	8	SE	BTD	80n	925m	0.0	5.0	.85	2.0§	16m	.50	5	C	PROM,Latched	B388a	DL24du
71	HM3-7625R2	256	8	SE	BTD	80n	925m	0.0	5.0	.85	2.0§	16m	.50	5	C	PROM,Latched	B388a	DL24cp
72	HM9-7625R2	256	8	SE	BTD	80n	925m	0.0	5.0	.85	2.0§	16m	.50	5	C	PROM,Latched	B388a	FL55
73	29600DM	256	8	SE	BTD	90n	650m	0.0	5.0	.80	2.0Δ	16m	.50	5	C	PROM	B310	DL∅
74	29601DM	256	8	SE	BTD	90n	650m	0.0	5.0	.80	2.0§	16m	.50	5	C	PROM	B310	DL∅
75	RC82S114F	256	8	SE	BTD	90n	925m	0.0	5.0	.80	2.0§	9.6m	.50	5	C	PROM	B199	DL24cb
76	RC82S114I	256	8	SE	BTD	90n	925m	0.0	5.0	.80	2.0§	9.6m	.50	5	C	PROM	B199	DL24f
77	RC82S114N	256	8	SE	BTD	90n	925m	0.0	5.0	.80	2.0§	9.6m	.50	5	C	PROM	B199	DL24ar
78	5335-1D	256	8	SE	BTX	90n	700m♦	0.0	5.0	.80	2.0Δ	12m	.50	5	C	Fld Prog	B130	ML207d
79	5335D	256	8	SE	BTX	90n	400m†	0.0	5.0	.80	2.0	8.0m	.50	5	C		B130a	ML47c
80	5336-1D	256	8	SE	BTX	90n	700m♦	0.0	5.0	.80	2.0§	12m	.50	5	C	Fld Prog	B130	ML207d
81	6335-1D	256	8	SE	BTX	90n	700m♦	0.0	5.0	.80	2.0Δ	16m	.50	0	7	Fld Prog	B130	ML207d
82	6335D	256	8	SE	BTX	90n	400m†	0.0	5.0	.80	2.0	10m	.50	0	7		B130a	ML47c
83	6336-1D	256	8	SE	BTX	90n	700m♦	0.0	5.0	.80	2.0§	16m	.50	0	7	Fld Prog	B130	ML207d
84	C1702A2	256	8	SE	MNG	650n	2.0 ∅	9.0	5.0	.65	3.0§	1.6m	.45	0	8	Erasable Prom	B18	DL24ed
85	C1702AL2	256	8	SE	MNG	650n	2.0 ∅	9.0	5.0	.65	3.0§	1.6m	.45	0	8		B18	DL24ed
86	H1702A2	256	8	SE	MNG	650n	2.0 ∅	9.0	5.0	.65	3.0§	1.6m	.45	0	8	Erasable Prom	B18	ML232
87	H1702AL2	256	8	SE	MNG	650n	2.0 ∅	9.0	5.0	.65	3.0§	1.6m	.45	0	8	Erasable Prom	B18	ML232
88	C1702A	256	8	SE	MNG	1.0u	2.0 ∅	9.0	5.0	.65	3.0§	1.6m	.45	0	7	Erasable PR	B18	DL24ed
89	C1702AL	256	8	SE	MNG	1.0u	2.0 ∅	9.0	5.0	.65	3.0§	1.6m	.45	0	8		B18	ML232a
90	H1702A	256	8	SE	MNG	1.0u	2.0 ∅	9.0	5.0	.65	3.0§	1.6m	.45	0	8		B18	ML232
91	H1702AL	256	8	SE	MNG	1.0u	2.0 ∅	9.0	5.0	.65	3.0§	1.6m	.45	0	8	Erasable Prom	B18	ML232
92	MM1702AD	256	8	SE	MNG	1.0u	2.0 ∅	9.0	5.0	.65	3.0§	1.6m	.45	0	7	EPROM	B441	ML184
93	C1702A6	256	8	SE	MNG	1.5u	2.0 ∅	9.0	5.0	.65	3.0§	1.6m	.45	0	7	Erasable PR	B18	DL24ed
94	uPD454D	256	8	SE	MNX	800n	670m†	0.0	12	.70	3.0§	1.7m	.50	1	7		B417	DL24bj
95	1601#1	256	8	SE	MPG	1.0u	700mØ	9.0	5.0	.80	3.0	1.6m	.45	0	7		B18	ML34
96	1701#1	256	8	SE	MPG	1.0u	700mØ	9.0	5.0	.80	3.0	1.6m	.45	0	7		B18	ML34b
97	1702	256	8	SE	MPG	1.0u	700mØ	9.0	5.0	.80	3.0	1.6m	.45	0	7		B18	ML34
98	C1601	256	8	SE	MPG	1.0u	500m	20	.50	2.0	4.2	1.6m	.45	0	8			DL∅
99	C1602A	256	8	SE	MPG	1.0u	2.0 ∅	9.0	5.0	.65	3.0§	1.6m	.45	0	7		B18	DL24bk
100	C1701	256	8	SE	MPG	1.0u	500m	20	.50	2.0	4.2	1.6m	.45	0	8			DL∅
101	HN351702A	256	8	SE	MPG	1.0u	2.0 ∅	9.0	5.0	.65	3.0§	1.6m	.45	0	7	Erasable PROM	B18	ML207g
102	M5L1702AS#1	256	8	SE	MPG	1.0u	300m†	9.0	5.0	.65♦	3.0§	1.6m	.45	0	7	EAROM	B18	DL24dw
103	MB8503	256	8	SE	MPG	1.0u	1.0 ∅	9.0	5.0	.60	2.4	1.6m	.45	0	7		B191	DL24a
104	MB8513	256	8	SE	MPG	1.0u	1.0 ∅	9.0	5.0	.60	2.4	1.6m	.45	0	7	Erasable PR	B191	DL24a
105	MF1601#2	256	8	SE	MPG	1.0u	1.0 ∅	9.0	5.0	.80	3.0	1.6m	.45	0	7		B18	ML34
106	MF1602	256	8	SE	MPG	1.0u	1.0 ∅	9.0	5.0	.80	3.0	1.6m	.45	0	7		B18	ML34
107	MF1701#2	256	8	SE	MPG	1.0u	1.0 ∅	9.0	5.0	.80	3.0	1.6m	.45	0	7		B18	ML34b
108	MF1702	256	8	SE	MPG	1.0u	1.0 ∅	9.0	5.0	.80	3.0	1.6m	.45	0	7		B18	ML34b
109	MM4203D#1	256	8	SE	MPG	1.0u	275mØ	12	5.0	1.0	3.0§	16m	.40	5	8	Non-Vol PROM	B95	ML184
110	MM4203Q#1	256	8	SE	MPG	1.0u	275mØ	12	5.0	1.0	3.0§	1.6m	.40	5	8	Non-Vol EPROM	B95	ML117

SYMBOLS AND CODES EXPLAINED IN INTERPRETER

3. READ ONLY MEMORIES (ROMS)

IN ORDER OF (1)No.WDS(2)No.BITS/WD(3)OP.MODE PRG.CODE(4)STRUCT.(5)MAX ACCESS TIME(6)TYPE No.

LINE No.	6 TYPE NUMBER	ORGANIZATION 1 NO. WORDS	2 BITS PER WORD	3 OP MODE PROG CODE	4 STRUC-TURE CODE	5 MAX. ACCESS TIME (S)	MAX. POWER DISS. (W)	POWER SUPPLY SPAN NEG. (V)	POS. (V)	INPUT LOGIC LEVELS MAX. '0' (V)	MIN. '1' (V)	MIN.OUTPUT SINK CURRENT (A)	@ OUT (V)	OPER TEMP RNGE CODE -	+	GENERAL DESCRIPTION	DRAWINGS FUNCTIONAL EQUIVALENT NUMBER	OUTLINE
1	MM5202AD	256	8	SE	MPG	1.0u	175m	9.0	5.0	1.0	3.0§	1.6m	.40	0	7		B177	ML184
2	MM5202AQ	256	8	SE	MPG	1.0u	175m	9.0	5.0	1.0	3.0§	1.6m	.40	0	7		B177	ML117
3	MM5203D#1	256	8	SE	MPG	1.0u	275mØ	12	5.0	1.0	3.0§	16m	.40	0	7	Non-Vol PROM	B95	ML184
4	MM5203Q#1	256	8	SE	MPG	1.0u	275mØ	12	5.0	1.0	3.0§	1.6m	.40	0	7	Non-Vol EPROM	B95	ML117
5	C1602A6	256	8	SE	MPG	1.5u	2.0 Ø	9.0	5.0	.65	3.0§	1.6m	.45	0	7		B18	DL24bk
6	M58563S1#1	256	8	SE	MPG	1.5u	500m	9.0	5.0	.65	3.0	1.6m	.45	0	7		B18	ML34
7	MSM2750-1A	256	8	SE	MPX	1.0u	2.0 Ø	9.0	5.0	-4.2	-2.0	1.6m	.45	0	7	EPROM	B18b	DLØ
8	MSM2750-2A	256	8	SE	MPX	1.2u	2.0 Ø	9.0	5.0	-4.2	-2.0	1.6m	.45	0	7	EPROM	B18b	DLØ
9	MM1742J	256	8	SE	MXG	1.0u		9.0	5.0	.45%	3.5§	1.6m	.45	0	7	PROM	B276	ML183a
10	MM4243J#1	256	8	SE	MXG	1.0u	660m	12	5.0	1.0	3.0§	1.6m	.40	5	8	PROM	B279	ML183a
11	MM5243J#1	256	8	SE	MXG	1.0u	660m	12	5.0	1.0	3.0§	1.6m	.40	0	7	PROM	B279	ML183a
12	HRM2048#4	256	8	SE	TAX	500n	640m♦	0.0	5.0	2.0	.80			0	7	PR Non-Vol RMM	B91	DL42a
13	RO6-2048S#1	256	8	SS	MPN	1.5u	300m†	12	5.0	.80	-1.5§	1.6m	.40	5	C		PN18x	
14	RO7-2048S#1	256	8	SS	MPN	1.5u	300m†	12	5.0	.80	-1.5§	1.6m	.40	0	7		PN18x	
15	FDR106Z1	256	9	DC	MPX	1.0u	90m†	14	0.0	-9.0	2.0			5	8	fc10kHz	B122	ML118c
16	FDR106Z	256	9	DC	MPX	1.0u	90m†	14	0.0	-9.0	2.0			5	8	fc10kHz	B122	ML118c
17	FDR106Z#1	256	9	DC	MPX	1.0u	62m	13	0.0	-10%	-1.0			5	8	fc 10kHz	B28	DL24bb
18	MCS2007	256	9	SC	MPN	800n	450mØ	12	5.0	.80	3.5			2	8		PN24y	DLØ
19	MN5020	256	10		MXX		250m	17	0.0	-2.0	-10			3	7		B98	DL24bb
20	CRC3501-1-2XXX#1	256	10	DC	MPC	800n	400mØ	0.0	5.0	.50	4.3			2	8		B6	ML13a
21	CRC3501-2-2XXX#1	256	10	DC	MPC	800n	400mØ	0.0	5.0	.50	4.3			2	8		B6b	FL4
22	TMS2300JC	256	10	DC	MPT	550n	225m†	12	5.0	.60	3.5§			2	8		B63	ML47d
23	TMS2300NC	256	10	DC	MPT	550n	225m†	12	5.0	.60	3.5§			2	8		B63	DL24bu
24	EA3100	256	10	DC	MPX	1.0u	94m†	13	0.0	-2.0	-9.0			5	8	fc 10kHz	B35	DL24bb
25	FDR126Z	256	10	DC	MPX	1.0u	90m†	14	0.0	-9.0	-2.0			5	8		B35	DL24bb
26	S8501	256	10	SC		1.0u	510m	12	5.0	.40	4.0			0	7		B31	ML45
27	S8614#1	256	10	SC	MPI	500n	595m	12	5.0	.60	3.7			0	7		C48	DL24a
28	S8773#1	256	10	SC	MPI	550n	595m	12	5.0	.60	3.7			0	6		C48	DL24a
29	MK2400P24	256	10	SC	MPI	600n	425m	12	5.0	.80	3.5§	1.6m	.40	0	7		B7	ML21
30	MK2400P28	256	10	SC	MPI	600n	425m	12	5.0	.80	3.5	1.6	.40	0	7	C.S.Decoder	B7	DL28a
31	MK2400P28#1	256	10	SC	MPI	600n	425m	12	5.0	.80	-1.5§	1.6m	.40	0	7		B7	ML21
32	MK2400P28#2	256	10	SC	MPI	600n	425m	12	5.0	.80	-1.5§	1.6m	.40	0	7		B7	DL28a
33	MCS2002	256	10	SC	MPN	800n	450mØ	12	5.0	.80	3.5			2	8		PN24y	DLØ
34	MCM1150LA#1	256	10	SC	MPX	800n	600mØ	24	0.0	.30	-16	10uΔ	-12	2	8		B77	DL16cf
35	MCM1150LC	256	10	SC	MPX	800n	600mØ	24	0.0	.30	-16	10uΔ	-12	2	8		B77	DL16cf
36	IM7604MDG	256	10	SC	MPX	1.0u	430mØ	0.0	12	10*	4.0	4.0	3.0	5	C		B3a	ML27
37	IM7605MDG	256	10	SC	MPX	1.0u	430mØ	0.0	12	10*	4.0	4.0	3.0	5	C		B3b	ML27
38	TMS2500JC#2	256	10	SC	MXX	400n	400m	12	5.0	1.0	3.5§	3.2m	.80	2	8		B64	ML47d
39	TMS2500NC#2	256	10	SC	MXX	400n	400m	12	5.0	1.0	3.5§	3.2m	.80	2	8		B64	DL24bu
40	SFF70701KM	256	12	SC	MPA	1.2u	410mØ	12	5.0	.80	3.0	2.0m†	1.0	5	C		B65	DL28a
41	SFF70701KT	256	12	SC	MPA	1.2u	410mØ	12	5.0	.80	3.0	2.0m†	1.0	2	8		B65	DL28a
42	TMS2700JC	256	12	SC	MPX	900n	650m	15	5.0	.50	2.6			2	8		B65	ML49a
43	TMS2700NC	256	12	SC	MPX	900n	650m	15	5.0	.50	2.6			2	8		B65	ML83
44	MM4227D	256	12	SC	MPX	1.0u	480m♦	15	5.0	.80	2.4§	1.6m	.40	5	C		PN28f	ML129
45	MM4228D	256	12	SC	MPX	1.0u	480m♦	15	5.0	.80	2.4§	1.6m	.40	5	C		PN28f	ML129
46	MM5227D	256	12	SC	MPX	1.0u	480m♦	15	5.0	.80	2.4§	1.6m	.40	2	7		PN28f	ML129
47	MM5228D	256	12	SC	MPX	1.0u	480m♦	15	5.0	.80	2.4§	1.6m	.40	2	7		PN28f	ML129
48	TMS2700JM	256	12	SC	MPX	1.1u	650m	15	5.0	.50	2.6			5	C		B65	ML49a
49	MM4229D	256	12	SC	MPX	1.4u	306mØ	12	5.0	.80	2.4	2.0uΔ	-5.0	5	C		B9b	ML29a
50	MM5229D	256	12	SC	MPX	1.4u	306mØ	12	5.0	.80	2.4	2.0uΔ	-5.0	2	7		B9b	ML29a
51	MM5229N	256	12	SC	MPX	1.4u	306mØ	12	5.0	.80	2.4	2.0uΔ	-5.0	2	7		B9b	DL28h
52	UA2572D	256	12	SC	MXX	1.2u	640m	20	0.0	.80♦	2.7	1.6m	.40	5	C		B9b	DL28b
53	UA3572D	256	12	SC	MXX	1.2u	640m	20	0.0	.80♦	2.7	1.6m	.40	2	7		B9b	DL28b
54	MRM3A256-20	256	20	SC	MXX	330n	9.5	12	12	.40	2.5	1.6m	.40	0	7		B54	PL4
55	MRM2B256-40	256	40	SC	MXX	330n	9.5	12	12	.40	2.5	1.6m	.40	0	7		B54	PL4
56	MRM1C256-80	256	80	SC	MXX	330n	9.5	12	12	.40	2.5	1.6m	.40	0	7		B54	PL4
57	MCS2020#2	320	7	DC	MPX	160n	200m	5.0	5.0	.80	3.5	1.6m	.40	2	8	7x10x32	C34	DLØ
58	S8499#1	320	7	SC	MPA	2.0u	650m	13	13	4.0	11			0	7		B92	ML13b
59	MCS2003	320	8	SC	MPN	800n	450mØ	12	5.0	.80	3.5			2	8		PN24y	DLØ
60	MCS1009	360	10	DC	MPX	20u	180m	12	5.0	.80	3.5	1.6m	.40	2	8	KE90key	B115	ML14b
61	TMS5000JC	360	10	DS	MPN		550m	12	5.0	.80	3.5§	1.6m	.50	2	8	KE90Key;f100Hz	B104	DL40a
62	TMS5000NC	360	10	DS	MPN		550m	12	5.0	.80	3.5§	1.6m	.50	2	8	KE90Key;f100Hz	B104	ML80
63	MCS2015	384	6	SS	MPN	800n	450mØ	12	5.0	.80	3.5			2	8		PN24y	DLØ
64	MCS2018#2	384	10	DC	MPX	160n	200m	5.0	5.0	.80	3.5	1.6m	.40	2	8	10x12x32	C33	DLØ
65	UA2525D#3	512	2	SC	MXX	900n	360m	10	0.0	.80♦	2.7	1.6m	.40	5	C		B9	DL24ay
66	UA2525F#3	512	2	SC	MXX	900n	360m	10	0.0	.80♦	2.7	1.6m	.40	5	C		B9	FL3a
67	UA3525D#3	512	2	SC	MXX	900n	360m	10	0.0	.80♦	2.7	1.6m	.40	2	7		B9	DL24ay
68	UA3525F#3	512	2	SC	MXX	900n	360m	10	0.0	.80♦	2.7	1.6m	.40	2	7		B9	FL3a
69	NC7010#1	512	2	SE	MXN	25u	150m†	30	0.0	-12	-2.0	0.5m$	-1.0	0	7	Non-Vol EAROM	B202	DLØ
70	C3302	512	4		BTD	70n	650m	0.0	5.0			15m		0	7		PN16bx	DL16ek
71	C3322	512	4		BTD	70n	650m	0.0	5.0		§	15m		0	7		PN16bx	DL16ek
72	D3302	512	4		BTD	70n	650m	0.0	5.0			15m		0	7		PN16bx	DL16cm
73	D3322	512	4		BTD	70n	650m	0.0	5.0		§	15m		0	7		PN16bx	DL16cm
74	P3302	512	4		BTD	70n	650m	0.0	5.0			15m		0	7		PN16bx	DL16at
75	P3322	512	4		BTD	70n	650m	0.0	5.0		§	15m		0	7		PN16bx	DL16at
76	C3302-4	512	4		BTD	90n	650m	0.0	5.0			15m		0	7		PN16bx	DL16ek
77	C3302-6	512	4		BTD	90n	575m	0.0	5.0			15m		0	7		PN16bx	DL16ek
78	C3322-4	512	4		BTD	90n	650m	0.0	5.0		§	15m		0	7		PN16bx	DL16ek
79	C3322-6	512	4		BTD	90n	575m	0.0	5.0		§	15m		0	7		PN16bx	DL16ek
80	D3302-4	512	4		BTD	90n	650m	0.0	5.0			15m		0	7		PN16bx	DL16cm
81	D3302-6	512	4		BTD	90n	575m	0.0	5.0			15m		0	7		PN16bx	DL16cm
82	D3322-4	512	4		BTD	90n	650m	0.0	5.0		§	15m		0	7		PN16bx	DL16cm
83	D3322-6	512	4		BTD	90n	575m	0.0	5.0		§	15m		0	7		PN16bx	DL16cm
84	P3302-4	512	4		BTD	90n	650m	0.0	5.0			15m		0	7		PN16bx	DL16at
85	P3302-6	512	4		BTD	90n	575m	0.0	5.0			15m		0	7		PN16bx	DL16at
86	P3322-4	512	4		BTD	90n	650m	0.0	5.0		§	15m		0	7		PN16bx	DL16at
87	P3322-6	512	4		BTD	90n	575m	0.0	5.0		§	15m		0	7		PN16bx	DL16at
88	RC82S231F	512	4		BTX	70n		0.0	5.0	.80	2.0§	16m	.50	5	C		B197	DL16cu
89	RC82S240F	512	4		BTX	90n	170u†	0.0	5.0	.80	2.0Δ	9.6m	.50	5	C	ROM	B413	DL24ch
90	FDR106Z#2	512	4	DC	MPX	1.0u	62m	13	0.0	-10%	-1.0			5	8	fc 10kHz.	B28	DL24bb
91	MD6205	512	4	SC	BTC	60n	575m♦	0.0	5.0	.85	2.0	15m	.45	0	7		B51	DL16b
92	MD5205	512	4	SC	BTC	90n	575m♦	0.0	5.0	.85	2.0	10m	.40	5	C		B51	DL16b
93	DM74S270J	512	4	SC	BTD	55n	650m	0.0	5.0	.80	2.0Δ	16m	.45	0	7	ROM	B133	DL16cr
94	DM74S270N	512	4	SC	BTD	55n	650m	0.0	5.0	.80	2.0Δ	16m	.45	0	7	ROM	B133	DL16bh
95	DM74S370J	512	4	SC	BTD	55n	650m	0.0	5.0	.80	2.0§	16m	.45	0	7	ROM	B133	DL16cr
96	DM74S370N	512	4	SC	BTD	55n	650m	0.0	5.0	.80	2.0§	16m	.45	0	7	ROM	B133	DL16bh
97	6205-1D	512	4	SC	BTD	60n	650m♦	0.0	5.0	8.0	2.0Δ	16m	.50	0	7		B129	DL16v
98	6205-1F	512	4	SC	BTD	60n	650m	0.0	5.0	.80	2.0Δ	16m	.50	0	7	ROM	PN16bt	FL49
99	6205-1J	512	4	SC	BTD	60n	650m♦	0.0	5.0	.80	2.0Δ	16m	.50	0	7	ROM	PN16bt	DL16bi
100	6205-1N	512	4	SC	BTD	60n	650m	0.0	5.0	.80	2.0Δ	16m	.50	0	7	ROM	PN16bt	DL16dj
101	6206-1D	512	4	SC	BTD	60n	650m♦	0.0	5.0	8.0	2.0§	16m	.50	0	7		B129	DL16v
102	6206-1F	512	4	SC	BTD	60n	650m	0.0	5.0	.80	2.0§	16m	.50	0	7	ROM	PN16bt	FL49
103	6206-1J	512	4	SC	BTD	60n	650m♦	0.0	5.0	.80	2.0§	16m	.50	0	7	ROM	PN16bt	DL16bi
104	6206-1N	512	4	SC	BTD	60n	650m	0.0	5.0	.80	2.0§	16m	.50	0	7	ROM	PN16bt	DL16dj
105	D3302A	512	4	SC	BTD	70n	700m♦	0.0	5.0	.85	2.0Δ	15m	.45	6	C		PN16bx	DL16dd
106	D3322A	512	4	SC	BTD	70n	700m♦	0.0	5.0	.85	2.0§	15m	.45	6	C		PN16bx	DL16dd
107	DM54S270J	512	4	SC	BTD	70n	650m	0.0	5.0	.80	2.0Δ	16m	.50	5	C	ROM	B133	DL16cr
108	DM54S370J	512	4	SC	BTD	70n	650m	0.0	5.0	.80	2.0§	16m	.50	5	C	ROM	B133	DL16cr

SYMBOLS AND CODES EXPLAINED IN INTERPRETER

3. READ ONLY MEMORIES (ROMS)

IN ORDER OF (1)No.WDS(2)No.BITS/WD(3)OP.MODE PRG.CODE(4)STRUCT.(5)MAX ACC.TIME(6)TYPE No.

LINE No.	6 TYPE NUMBER	ORGANIZATION 1 NO. WORDS	2 BITS PER WORD	3 OP MODE PROG CODE	4 STRUC-TURE CODE	5 MAX. ACCESS TIME (S)	MAX. POWER DISS. (W)	POWER SUPPLY SPAN NEG. (V)	POS. (V)	INPUT LOGIC LEVELS MAX. '0' (V)	MIN. '1' (V)	MIN.OUTPUT SINK CURRENT (A)	@ OUT (V)	OPER TEMP RNGE CODE -	+	GENERAL DESCRIPTION	DRAWINGS FUNCTIONAL EQUIVALENT NUMBER	OUTLINE
1	5205-1D	512	4	SC	BTD	75n	650m♦	0.0	5.0	.80	2.0Δ	10m	.50	5	C		B129	DL16v
2	5205-1F	512	4	SC	BTD	75n	650m	0.0	5.0	.80	2.0Δ	12m	.50	5	C	ROM	PN16bt	FL49
3	5205-1J	512	4	SC	BTD	75n	650m♦	0.0	5.0	8.0	2.0Δ	12m	.50	5	C	ROM	PN16bt	DL16bi
4	5205-1N	512	4	SC	BTD	75n	650m	0.0	5.0	.80	2.0Δ	12m	.50	5	C	ROM	PN16bt	DL16dj
5	5206-1D	512	4	SC	BTD	75n	650m♦	0.0	5.0	.80	2.0§	10m	.50	5	C		B129	DL16v
6	5206-1F	512	4	SC	BTD	75n	650m	0.0	5.0	.80	2.0§	12m	.50	5	C	ROM	PN16bt	FL49
7	5206-1J	512	4	SC	BTD	75n	650m♦	0.0	5.0	8.0	2.0§	12m	.50	5	C	ROM	PN16bt	DL16bi
8	5206-1N	512	4	SC	BTD	75n	650m	0.0	5.0	.80	2.0§	12m	.50	5	C	ROM	PN16bt	DL16dj
9	6242-1D	512	4	SC	BTD	75n	140u%	0.0	5.0	8.0	2.0Δ	10	.50	0	7		B130	ML207d
10	6242-1J	512	4	SC	BTD	75n	140u%	0.0	5.0	.80	2.0Δ	10m	.50	0	7		B130	DL24cm'
11	6243-1D	512	4	SC	BTD	75n	140u%	0.0	5.0	8.0	2.0§	10	.50	0	7		B130	ML207d
12	6243-1J	512	4	SC	BTD	75n	140u%	0.0	5.0	.80	2.0§	10m	.50	0	7		B130	DL24cm
13	5242-1D	512	4	SC	BTD	90n	140u%	0.0	5.0	.80	2.0Δ	8.0m	.50	5	C		B130	ML207d
14	5242-1J	512	4	SC	BTD	90n	140u%	0.0	5.0	8.0	2.0Δ	8.0	.50	5	C		B130	DL24cm
15	5243-1D	512	4	SC	BTD	90n	140u%	0.0	5.0	.80	2.0§	8.0m	.50	5	C		B130	ML207d
16	5243-1J	512	4	SC	BTD	90n	140u%	0.0	5.0	8.0	2.0§	8.0	.50	5	C		B130	DL24cm
17	D3302A4	512	4	SC	BTD	90n	700m♦	0.0	5.0	.85	2.0Δ	15m	.45	6	C		PN16bx	DL16dd
18	D3302AL6	512	4	SC	BTD	90n	550m♦	0.0	5.0	.85	2.0Δ	15m	.45	6	C		PN16bx	DL16dd
19	D3322A4	512	4	SC	BTD	90n	700m♦	0.0	5.0	.85	2.0§	15m	.45	6	C		PN16bx	DL16dd
20	D3322AL6	512	4	SC	BTD	90n	550m♦	0.0	5.0	.85	2.0§	15m	.45	6	C		PN16bx	DL16dd
21	6205D	512	4	SC	BTX	60n	625m	0.0	5.0	.80	2.0	16m	.45	0	7		PN16bt	DL16v
22	6205J	512	4	SC	BTX	60n	625m	0.0	5.0	.80	2.0	16m	.45	0	7		PN16bt	DL16da
23	6205N	512	4	SC	BTX	60n	625m	0.0	5.0	.80	2.0	16m	.45	0	7		PN16bt	DL16da
24	6206D	512	4	SC	BTX	60n	625m	0.0	5.0	.80	2.0§	16m	.45	0	7		PN16bt	DL16v
25	6206J	512	4	SC	BTX	60n	625m	0.0	5.0	.80	2.0§	16m	.45	0	7		PN16bt	DL16da
26	6206N	512	4	SC	BTX	60n	625m	0.0	5.0	.80	2.0§	16m	.45	0	7		PN16bt	DL16da
27	RC82S230F	512	4	SC	BTX	70n		0.0	5.0	.80	2.0Δ	16m	.50	5	C		B197	DL16cu
28	5205D	512	4	SC	BTX	90n	625m	0.0	5.0	.80	2.0	10m	.45	5	C		PN16bt	DL16v
29	5205J	512	4	SC	BTX	90n	625m	0.0	5.0	.80	2.0	10m	.45	5	C		PN16bt	DL16da
30	5205N	512	4	SC	BTX	90n	625m	0.0	5.0	.80	2.0	10m	.45	5	C		PN16bt	DL16da
31	5206D	512	4	SC	BTX	90n	625m	0.0	5.0	.80	2.0§	10m	.45	5	C		PN16bt	DL16v
32	5206J	512	4	SC	BTX	90n	625m	0.0	5.0	.80	2.0§	10m	.45	5	C		PN16bt	DL16da
33	5206N	512	4	SC	BTX	90n	625m	0.0	5.0	.80	2.0§	10m	.45	5	C		PN16bt	DL16da
34	SFF70611KM#2	512	4	SC	MPA	700n	430m	12	5.0	.80	3.0	2.0m†	6.0	5	C		B119	DL24w
35	SFF70611KT#2	512	4	SC	MPA	700n	430m	12	5.0	.80	3.0	2.0m†	1.0	2	8		B119	DL24w
36	CRC3002-1-3#1	512	4	SC	MPC	1.5u	270mØ	12	12	.40♦	2.5			0	7		B5	DL24bd
37	CRC3002-1-3XXX#2	512	4	SC	MPC	1.5u	270mØ	12	12	.40♦	2.5			0	7	Avail.Std.Pr	B5	ML13a
38	CRC3002-2-3#1	512	4	SC	MPC	1.5u	270mØ	12	12	.40♦	2.5			0	7		B5	FL10
39	CRC3002-2-3XXX#2	512	4	SC	MPC	1.5u	270mØ	12	12	.40♦	2.5			0	7	Avail.Std.Pr.	B5	FL10
40	MCS2011	512	4	SC	MPN	800n	450mØ	12	5.0	.80	3.5			2	8		PN24z	DL⊘
41	RO6-2048/4	512	4	SC	MPN	1.5u		12	5.0	.80	3.5§	1.6m	.40	5	C		B233c	ML34e
42	RO7-2048/4	512	4	SC	MPN	1.5u		12	5.0	.80	3.5§	1.6m	.40	0	7		B233c	DL24ck
43	RO1-2048#3	512	4	SC	MPT	750n	130m†	24	0.0	-2.0	-24	3.0m		5	8		B49	ML47
44	TMS4700JC	512	4	SC	MPX	55n		20	0.0	-1.0	-10			2	8		PN28c	ML49
45	N2430Y#2	512	4	SC	MPX	500n	1.1 ⊘	12	12	10*	4.0			2	7		B26	ML21b
46	N2431Y#2	512	4	SC	MPX	500n	1.1 ⊘	12	12	10*	4.0			2	7		B26	ML21b
47	N2435Y#2	512	4	SC	MPX	500n	1.1 ⊘	12	12	10*	4.0			2	7		B26b	ML21b
48	N2436Y#2	512	4	SC	MPX	500n	1.1 ⊘	12	12	10*	4.0			2	7		B26b	ML21b
49	MM4230D#2	512	4	SC	MPX	725n	480mØ	12	12	10*	4.0			5	C		B26	DL24ay
50	MM4230J#2	512	4	SC	MPX	725n	480mØ	12	12	10*	4.0			5	C		B26	DL24cc
51	MM5230D#2	512	4	SC	MPX	725n	480mØ	12	12	10*	4.0			2	7		B26	DL24ay
52	MM5230J#2	512	4	SC	MPX	725n	480mØ	12	12	10*	4.0			2	7		B26	DL24cc
53	MM5230N#2	512	4	SC	MPX	725n	480mØ	12	12	10*	4.0			2	7		B26	DL24au
54	MCM1110LA#2	512	4	SC	MPX	800n	600mØ	24	0.0	0.0†	-12	10uΔ	-12	2	8		B75	DL24w
55	MCM1110LB	512	4	SC	MPX	800n	600mØ	24	0.0	0.0†	-12	10uΔ	-12	2	8		B75a	DL24w
56	MM4213D#2	512	4	SC	MPX	850n	175mØ	12	5.0	1.0*	3.0§			5	C		B26	DL24ay
57	MM4213J#2	512	4	SC	MPX	850n	175mØ	12	5.0	1.0*	3.0§			5	C		B26	DL24cc
58	MM4213N#2	512	4	SC	MPX	850n	175mØ	12	5.0	1.0*	3.0§			5	C		B26	DL24af
59	MM5213D#2	512	4	SC	MPX	850n	175mØ	12	5.0	1.0*	3.0§			2	7		B26	DL24ay
60	MM5213J#2	512	4	SC	MPX	850n	175mØ	12	5.0	1.0*	3.0§			2	7		B26	DL24cc
61	MM5213N#2	512	4	SC	MPX	850n	175mØ	12	5.0	1.0*	3.0§			2	7		B26	DL24af
62	MM4231D#2	512	4	SC	MPX	950n	510mØ	12	5.0	3.0*	.80			5	C		B26	DL24ay
63	MM4231J#2	512	4	SC	MPX	950n	510mØ	12	5.0	3.0*	.80			5	C		B26	DL24cc
64	MM5231D#2	512	4	SC	MPX	950n	510mØ	12	5.0	3.0*	.80			2	7		B26	DL24ay
65	MM5231J#2	512	4	SC	MPX	950n	510mØ	12	5.0	3.0*	.80			2	7		B26	DL24cc
66	MM5231N#2	512	4	SC	MPX	950n	510mØ	12	5.0	3.0*	.80			2	7		B26	DL24au
67	MM423#2	512	4	SC	MPX	1.0u	420mØ	12	12	9.5*	5.0			5	C		B26	ML30b
68	MM523#2	512	4	SC	MPX	1.0u	420mØ	12	12	9.5*	5.0			2	7		B26	ML30b
69	MM4224D#2	512	4	SC	MPX	1.0u	480m♦	15	5.0	.80	2.4§	1.6m	.40	5	C		B9a	ML130
70	MM4225D#2	512	4	SC	MPX	1.0u	480m♦	15	5.0	.80	2.4§	1.6m	.40	5	C		B9a	ML130
71	MM5224D#2	512	4	SC	MPX	1.0u	480m♦	15	5.0	.80	2.4§	1.6m	.40	2	7		B9a	ML130
72	MM5225D#2	512	4	SC	MPX	1.0u	480m♦	15	5.0	.80	2.4§	1.6m	.40	2	7		B9a	ML130
73	RO1-2048S#2	512	4	SC	MPX	2.0u	275m†	12	12	10*	4.0	2.5m	2.4	0	7		B26	
74	S8453	512	4	SC	MPX	5.0u	500m†	28	0.0	-9.0	-2.0			0	7		B30a	ML44
75	TMS2600JC#2	512	4	SC	MXX	900n	170m†	12	12	-3.0	-8.0			2	8		PN24w	ML47b
76	UA2548#2	512	4	SC	MXX	900n	600m	20	0.0	.80♦	2.7	1.6m	.40	5	C		B9a	DL24ay
77	UA3548#2	512	4	SC	MXX	900n	600m	20	0.0	.80♦	2.7	1.6m	.40	2	7		B9a	DL24ay
78	TMS2600NC#1	512	4	SC	MXX	1.0u	180m†	12	12	-3.0	-8.0			2	8		PN24w	DL24bu
79	MCM7620LDC	512	4	SE		70n	325m	0.0	5.0	.80	2.0Δ	16m	.45	0	7	CS PROM	PN16bx	DL16db
80	MCM7621LDC	512	4	SE		70n	325m	0.0	5.0	.80	2.0§	16m	.45	0	7	CS PROM	PN16bx	DL16db
81	MCM7620LDM	512	4	SE		85n	325m	0.0	5.0	.80	2.0Δ	16m	.45	5	C	CS PROM	PN16bx	DL16db
82	MCM7621LDM	512	4	SE		85n	325m	0.0	5.0	.80	2.0§	16m	.45	5	C	CS PROM	PN16bx	DL16db
83	IM5604CFE	512	4	SE	BDX	70n	275u%	0.0	5.0	.80	2.0	16m	.45	0	7		B203	FL14e
84	IM5604CPE	512	4	SE	BDX	70n	275u%	0.0	5.0	.80	2.0	16m	.45	0	7		B203	ML48d
85	IM5624CFE	512	4	SE	BDX	70n	275u%	0.0	5.0	.80	2.0	16m	.45	0	7		B204	FL14e
86	IM5624CPE	512	4	SE	BDX	70n	275u%	0.0	5.0	.80	2.0	16m	.45	0	7		B204	ML48d
87	MD6305	512	4	SE	BTC	60n	625m	0.0	5.5	.85	2.0	15m	.45	0	7		B51a	DL16ek
88	53PS240F	512	4	SE	BTD	30n	425m†	0.0	5.0	.80	2.0Δ	16m	.50	5	C	PROM;Pwr Sw	PN16bt	FL49
89	53PS240J	512	4	SE	BTD	30n	425m†	0.0	5.0	.80	2.0Δ	16m	.50	5	C	PROM;Pwr Sw	PN16bt	DL16bi
90	53PS240N	512	4	SE	BTD	30n	425m†	0.0	5.0	.80	2.0Δ	16m	.50	5	C	PROM;Pwr Sw	PN16bt	DL16dj
91	53PS241F	512	4	SE	BTD	30n	425m†	0.0	5.0	.80	2.0§	16m	.50	5	C	PROM;Pwr Sw	PN16bt	FL49
92	53PS241J	512	4	SE	BTD	30n	425m†	0.0	5.0	.80	2.0§	16m	.50	5	C	PROM;Pwr Sw	PN16bt	DL16bi
93	53PS241N	512	4	SE	BTD	30n	425m†	0.0	5.0	.80	2.0§	16m	.50	5	C	PROM;Pwr Sw	PN16bt	DL16dj
94	63PS240F	512	4	SE	BTD	30n	425m†	0.0	5.0	.80	2.0Δ	16m	.45	0	7	PROM;Pwr Sw	PN16bt	FL49
95	63PS240J	512	4	SE	BTD	30n	425m†	0.0	5.0	.80	2.0Δ	16m	.45	0	7	PROM;Pwr Sw	PN16bt	DL16bi
96	63PS240N	512	4	SE	BTD	30n	425m†	0.0	5.0	.80	2.0Δ	16m	.45	0	7	PROM;Pwr Sw	PN16bt	DL16dj
97	63PS241F	512	4	SE	BTD	30n	425m†	0.0	5.0	.80	2.0§	16m	.45	0	7	PROM;Pwr Sw	PN16bt	FL49
98	63PS241J	512	4	SE	BTD	30n	425m†	0.0	5.0	.80	2.0§	16m	.45	0	7	PROM;Pwr Sw	PN16bt	DL16bi
99	63PS241N	512	4	SE	BTD	30n	425m†	0.0	5.0	.80	2.0§	16m	.45	0	7	PROM;Pwr Sw	PN16bt	DL16dj
100	DM54S570D	512	4	SE	BTD	35n	750m	0.0	5.0	.80	2.0Δ	16m	.50	5	C	PROM	B133	DL16bg
101	DM54S571D	512	4	SE	BTD	35n	750m	0.0	5.0	.80	2.0§	16m	.50	5	C	PROM	B133	DL16bg
102	DM74S570D	512	4	SE	BTD	35n	750m	0.0	5.0	.80	2.0Δ	16m	.50	0	7	PROM	B133	DL16bg
103	DM74S571D	512	4	SE	BTD	35n	750m	0.0	5.0	.80	2.0§	16m	.50	0	7	PROM	B133	DL16bg
104	63S240F	512	4	SE	BTD	45n	650m	0.0	5.0	.80	2.0Δ	16m	.45	0	7	PROM	PN16bt	FL49

SYMBOLS AND CODES EXPLAINED IN INTERPRETER

3. READ ONLY MEMORIES (ROMS)

IN ORDER OF (1)No.WDS(2)No.BITS/WD(3)OP.MODE PRG.CODE(4)STRUCT.(5)MAX ACC.TIME(6)TYPE No.

LINE No.	6 TYPE NUMBER	ORGANIZATION 1 NO. WORDS	2 BITS PER WORD	3 OP MODE PROG CODE	4 STRUC-TURE CODE	5 MAX. ACCESS TIME (S)	MAX. POWER DISS. (W)	POWER SUPPLY SPAN NEG. (V)	POS. (V)	INPUT LOGIC LEVELS MAX. '0' (V)	MIN. '1' (V)	MIN.OUTPUT SINK CURRENT (A)	@ OUT (V)	OPER TEMP RNGE CODE -	+	GENERAL DESCRIPTION	DRAWINGS FUNCTIONAL EQUIVALENT NUMBER	OUTLINE
1	63S240J	512	4	SE	BTD	45n	650m	0.0	5.0	.80	2.0Δ	16m	.45	0	7	PROM	PN16bt	DL16bi
2	63S240N	512	4	SE	BTD	45n	650m	0.0	5.0	.80	2.0Δ	16m	.45	0	7	PROM	PN16bt	DL16dj
3	63S241F	512	4	SE	BTD	45n	650m	0.0	5.0	.80	2.0§	16m	.45	0	7	PROM	PN16bt	FL49
4	63S241J	512	4	SE	BTD	45n	650m	0.0	5.0	.80	2.0§	16m	.45	0	7	PROM	PN16bt	DL16bi
5	63S241N	512	4	SE	BTD	45n	650m	0.0	5.0	.80	2.0§	16m	.45	0	7	PROM	PN16bt	DL16dj
6	93436DC	512	4	SE	BTD	50n	650m	0.0	5.0	.80	2.0Δ	16m	.45	0	7	Field Program	B143	DL16f
7	93436FC	512	4	SE	BTD	50n	650m♦	0.0	5.0	.80	2.0Δ	16m	.45	0	7	Field Program	B143	FL14
8	93436PC	512	4	SE	BTD	50n	650m♦	0.0	5.0	.80	2.0Δ	16m	.45	0	7	Field Program	B143	DL16dh
9	93446DC	512	4	SE	BTD	50n	650m♦	0.0	5.0	.80	2.0§	16m	.45	0	7	Field Program	B143	DL16f
10	93446FC	512	4	SE	BTD	50n	650m♦	0.0	5.0	.80	2.0§	16m	.45	0	7	Field Program	B143	FL14
11	93446PC	512	4	SE	BTD	50n	650m♦	0.0	5.0	.80	2.0§	16m	.45	0	7	Field Program	B143	DL16dh
12	53S240F	512	4	SE	BTD	55n	650m	0.0	5.0	.80	2.0Δ	16m	.50	5	C	PROM	PN16bt	FL49
13	53S240J	512	4	SE	BTD	55n	650m	0.0	5.0	.80	2.0Δ	16m	.50	5	C	PROM	PN16bt	DL16bi
14	53S240N	512	4	SE	BTD	55n	650m	0.0	5.0	.80	2.0Δ	16m	.50	5	C	PROM	PN16bt	DL16dj
15	53S241F	512	4	SE	BTD	55n	650m	0.0	5.0	.80	2.0§	16m	.50	5	C	PROM	PN16bt	FL49
16	53S241J	512	4	SE	BTD	55n	650m	0.0	5.0	.80	2.0§	16m	.50	5	C	PROM	PN16bt	DL16bi
17	53S241N	512	4	SE	BTD	55n	650m	0.0	5.0	.80	2.0§	16m	.50	5	C	PROM	PN16bt	DL16dj
18	29610DC	512	4	SE	BTD	55n	650m	0.0	5.0	.80	2.0Δ	16m	.50	0	7	PROM	B311	DLØ
19	TM622	512	4	SE	BTD	55n	650m♦	0.0	5.0	.80	2.0Δ	16m	.45	0	7	Field Program	B143	DL16dh
20	TM624	512	4	SE	BTD	55n	875m	0.0	5.0	.80	2.0§	16m	.45	0	7	Field Program	74S474	DL24ci
21	63LS240F	512	4	SE	BTD	60n	350m	0.0	5.0	.80	2.0Δ	16m	.45	0	7	PROM	PN16bt	FL49
22	63LS240J	512	4	SE	BTD	60n	350m	0.0	5.0	.80	2.0Δ	16m	.45	0	7	PROM	PN16bt	DL16bi
23	63LS240N	512	4	SE	BTD	60n	350m	0.0	5.0	.80	2.0Δ	16m	.45	0	7	PROM	PN16bt	DL16dj
24	63LS241F	512	4	SE	BTD	60n	350m	0.0	5.0	.80	2.0§	16m	.45	0	7	PROM	PN16bt	FL49
25	63LS241J	512	4	SE	BTD	60n	350m	0.0	5.0	.80	2.0§	16m	.45	0	7	PROM	PN16bt	DL16bi
26	63LS241N	512	4	SE	BTD	60n	350m	0.0	5.0	.80	2.0§	16m	.45	0	7	PROM	PN16bt	DL16dj
27	6305-1N	512	4	SE	BTD	60n	650m	0.0	5.0	.80	2.0Δ	16m	.50	0	7	PROM	PN16cr	DL16dj
28	6306-1N	512	4	SE	BTD	60n	650m	0.0	5.0	.80	2.0§	16m	.50	0	7	PROM	PN16cr	DL16dj
29	29612DC	512	4	SE	BTD	60n	650m	0.0	5.0	.80	2.0Δ	16m	.50	0	7	PROM;Pwr Sw	B311a	DLØ
30	93436DM	512	4	SE	BTD	60n	650m	0.0	5.0	.80	2.0Δ	16m	.45	5	C	Field Program	B143	DL16f
31	93436FM	512	4	SE	BTD	60n	650m♦	0.0	5.0	.80	2.0Δ	16m	.45	5	C	Field Program	B143	FL14
32	93446DM	512	4	SE	BTD	60n	650m♦	0.0	5.0	.80	2.0§	16m	.45	5	C	Field Program	B143	DL16f
33	93446FM	512	4	SE	BTD	60n	650m♦	0.0	5.0	.80	2.0§	16m	.45	5	C	Field Program	B143	FL14
34	D3602A-2	512	4	SE	BTD	60n	700m♦	0.0	5.0	.85	2.0Δ	15m	.45	0	7	PROM	PN16bx	DL16dd
35	D3622A-2	512	4	SE	BTD	60n	700m♦	0.0	5.0	.85	2.0§	15m	.45	0	7	PROM	PN16bx	DL16dd
36	MB7053Z	512	4	SE	BTD	60n		0.0	5.0	.80	2.0§	16m	.45	0	7	PROM	74S571	DL16fu
37	MB7058Z	512	4	SE	BTD	60n		0.0	5.0	.80	2.0Δ	16m	.45	0	7	PROM	74S570	DL16fu
38	53LS240F	512	4	SE	BTD	70n	350m	0.0	5.0	.80	2.0Δ	12m	.50	5	C	PROM	PN16bt	FL49
39	53LS240J	512	4	SE	BTD	70n	350m	0.0	5.0	.80	2.0Δ	12m	.50	5	C	PROM	PN16bt	DL16bi
40	53LS240N	512	4	SE	BTD	70n	350m	0.0	5.0	.80	2.0Δ	12m	.50	5	C	PROM	PN16bt	DL16dj
41	53LS241F	512	4	SE	BTD	70n	350m	0.0	5.0	.80	2.0§	12m	.50	5	C	PROM	PN16bt	FL49
42	53LS241J	512	4	SE	BTD	70n	350m	0.0	5.0	.80	2.0§	12m	.50	5	C	PROM	PN16bt	DL16bi
43	53LS241N	512	4	SE	BTD	70n	350m	0.0	5.0	.80	2.0§	12m	.50	5	C	PROM	PN16bt	DL16dj
44	29610DM	512	4	SE	BTD	70n	650m	0.0	5.0	.80	2.0Δ	16m	.50	5	C	PROM	B311	DLØ
45	D3602	512	4	SE	BTD	70n	700m♦	0.0	5.0	.85	2.0Δ	15m	.45	0	7	PROM	PN16bx	DL16dd
46	D3602A	512	4	SE	BTD	70n	700m♦	0.0	5.0	.85	2.0Δ	15m	.45	0	7	PROM	PN16bx	DL16dd
47	D3622	512	4	SE	BTD	70n	700m♦	0.0	5.0	.85	2.0§	15m	.45	0	7	PROM	PN16bx	DL16dd
48	D3622A	512	4	SE	BTD	70n	700m♦	0.0	5.0	.85	2.0§	15m	.45	0	7	PROM	PN16bx	DL16dd
49	MB7053P	512	4	SE	BTD	70n		0.0	5.0	.80	2.0§	16m	.45	0	7	PROM	74S571	DL16gq
50	MB7058P	512	4	SE	BTD	70n		0.0	5.0	.80	2.0Δ	16m	.45	0	7	PROM	74S570	DL16gq
51	MCM7620DC	512	4	SE	BTD	70n	500m	0.0	5.0	.80	2.0Δ	16m	.45	0	7	PROM	PN16bt	DL16bm
52	5305-1N	512	4	SE	BTD	75n	650m	0.0	5.0	.80	2.0Δ	12m	.50	5	C	PROM	PN16cr	DL16dj
53	5306-1N	512	4	SE	BTD	75n	650m	0.0	5.0	.80	2.0§	12m	.50	5	C	PROM	PN16cr	DL16dj
54	29612DM	512	4	SE	BTD	75n	650m	0.0	5.0	.80	2.0Δ	16m	.50	5	C	PROM;Pwr Sw	B311a	DLØ
55	MCM7620DM	512	4	SE	BTD	85n	500m	0.0	5.0	.80	2.0Δ	16m	.45	5	C	PROM	PN16bt	DL16bm
56	MCM7621DM	512	4	SE	BTD	85n	500m	0.0	5.0	.80	2.0§	16m	.45	5	C	PROM	PN16bt	DL16bm
57	D3602-4	512	4	SE	BTD	90n	700m♦	0.0	5.0	.85	2.0Δ	15m	.45	6	C	PROM	PN16bx	DL16cm
58	D3602-6	512	4	SE	BTD	90n	650m	0.0	5.0							PROM	PN16bx	DL16cm
59	D3602L6	512	4	SE	BTD	90n	550m♦	0.0	5.0	.85	2.0Δ	15m	.45	6	C		PN16bx	DL16dd
60	D3622-4	512	4	SE	BTD	90n	700m♦	0.0	5.0	.85	2.0§	15m	.45	6	C	PROM	PN16bx	DL16cm
61	D3622-6	512	4	SE	BTD	90n	650m	0.0	5.0							PROM	PN16bx	DL16cm
62	M3602	512	4	SE	BTD	90n	700m♦	0.0	5.0	.80	2.0	10m	.45	5	C		PN16bx	ML127p
63	M3622	512	4	SE	BTD	90n	700m♦	0.0	5.0	.80	2.0§	10m	.45	5	C		PN16bx	ML127p
64	M3602-6	512	4	SE	BTD	120n	550m♦	0.0	5.0	.80	2.0	10m	.45	3	C		PN16bx	ML127p
65	M3622-6	512	4	SE	BTD	120n	550m♦	0.0	5.0	.80	2.0§	10m	.45	3	C		PN16bx	ML127p
66	RC82S130F	512	4	SE	BTX	50n	700m	0.0	5.0	.85	2.0Δ	16m	.45	0	7	PROM	B197	DL16cv
67	RC82S131F	512	4	SE	BTX	50n	700m	0.0	5.0	.85	2.0§	16m	.45	0	7	PROM	B197	DL16cv
68	6305-1D	512	4	SE	BTX	60n	650m♦	0.0	5.0	.80	2.0Δ	16m	.50	0	7	Fld Prog	B129	DL16v
69	6306-1D	512	4	SE	BTX	60n	650m♦	0.0	5.0	.80	2.0§	16m	.50	0	7	Fld Prog	B129	DL16v
70	5305D	512	4	SE	BTX	70n	650m	0.0	5.0	.80	2.0	10m	.45	5	C		B129	DL16v
71	5305J	512	4	SE	BTX	70n	650m	0.0	5.0	.80	2.0	10m	.45	5	C		B129	DL16cq
72	5306D	512	4	SE	BTX	70n	650m	0.0	5.0	.80	2.0§	10m	.45	5	C		B129	DL16v
73	5306J	512	4	SE	BTX	70n	650m	0.0	5.0	.80	2.0§	10m	.45	5	C		B129	DL16cq
74	6305D	512	4	SE	BTX	70n	650m	0.0	5.0	.80	2.0	16m	.45	0	7		B129	DL16v
75	6305J	512	4	SE	BTX	70n	650m	0.0	5.0	.80	2.0	16m	.45	0	7		B129	DL16cq
76	6306D	512	4	SE	BTX	70n	650m	0.0	5.0	.80	2.0§	16m	.45	0	7		B129	DL16v
77	6306J	512	4	SE	BTX	70n	650m	0.0	5.0	.80	2.0§	16m	.45	0	7		B129	DL16cq
78	IM5604CDE	512	4	SE	BTX	70n	244u%	0.0	5.0	.80	2.0Δ	16m	.30	0	7		B469	DL16ak
79	IM5604CFE#	512	4	SE	BTX	70n	244u%	0.0	5.0	.80	2.0Δ	16m	.30	0	7	PROM	B469	FL76
80	IM5604CJE	512	4	SE	BTX	70n	244u%	0.0	5.0	.80	2.0Ø	16m	.30	0	7	PROM	B469	DL16ej
81	IM5604CPE#	512	4	SE	BTX	70n	244u%	0.0	5.0	.80	2.0Δ	16m	.30	0	7	PROM	B469	DL16bn
82	IM5604MDE	512	4	SE	BTX	70n	244u%	0.0	5.0	.80	2.0Δ	16m	.30	5	C		B469	DL16ak
83	IM5604MFE	512	4	SE	BTX	70n	244u%	0.0	5.0	.80	2.0Δ	16m	.30	5	C		B469	FL76
84	IM5604MJE	512	4	SE	BTX	70n	244u%	0.0	5.0	.80	2.0Ø	16m	.30	5	C	PROM	B469	DL16ej
85	IM5624CDE	512	4	SE	BTX	70n	244u%	0.0	5.0	.80	2.0Ø	16m	.30	0	7		B469	DL16ak
86	IM5624CFE#	512	4	SE	BTX	70n	244u%	0.0	5.0	.80	2.0Ø	16m	.30	0	7	PROM	B469	FL76
87	IM5624CJE	512	4	SE	BTX	70n	244u%	0.0	5.0	.80	2.0Δ	16m	.30	0	7	PROM	B469	DL16ej
88	IM5624CPE#	512	4	SE	BTX	70n	244u%	0.0	5.0	.80	2.0Ø	16m	.30	0	7	PROM	B469	DL16bn
89	IM5624MDE	512	4	SE	BTX	70n	244u%	0.0	5.0	.80	2.0Ø	16m	.30	5	C	PROM	B469	DL16ak
90	IM5624MFE	512	4	SE	BTX	70n	244u%	0.0	5.0	.80	2.0Ø	16m	.30	5	C		B469	FL76
91	IM5624MJE	512	4	SE	BTX	70n	244u%	0.0	5.0	.80	2.0Δ	16m	.30	5	C	PROM	B469	DL16ej
92	MB7053	512	4	SE	BTX	70n	735m	0.0	5.0	.80	2.0§	16m	.45	0	7	PROM	B203	ML4k
93	MB7058	512	4	SE	BTX	70n	735m	0.0	5.0	.80	2.0Δ	16m	.45	0	7	PROM	B204	ML4k
94	5305-1D	512	4	SE	BTX	75n	650m♦	0.0	5.0	.80	2.0Δ	12m	.50	5	C	Fld Prog	B129	DL16v
95	5306-1D	512	4	SE	BTX	75n	650m♦	0.0	5.0	.80	2.0§	12m	.50	5	C	Fld Prog	B129	DL16v
96	M5L1702AS#2	512	4	SE	MPG	1.0u	300mt	9.0	5.0	.65♦	3.0§	1.6m	.45	0	7	EAROM	B18	DL24dw
97	MM4203D#2	512	4	SE	MPG	1.0u	660m	12	5.0	1.0	3.0§	16m	.40	5	8	Non-Vol PROM	B95	ML184
98	MM4203Q#2	512	4	SE	MPG	1.0u	660m	12	5.0	1.0	3.0§	1.6m	.40	5	8	Non-Vol EPROM	B95	ML117
99	MM5203D#2	512	4	SE	MPG	1.0u	660m	12	5.0	1.0	3.0§	16m	.40	0	7	Non-Vol PROM	B95	ML184
100	MM5203Q#2	512	4	SE	MPG	1.0u	660m	12	5.0	1.0	3.0§	1.6m	.40	0	7	Non-Vol EPROM	B95	ML117
101	M58563S1#2	512	4	SE	MPG	1.5u	500m	9.0	5.0	.65	3.0	1.6m	.45	0	7		B18	ML34
102	MM4243J#2	512	4	SE	MXG	1.0u	660m	12	5.0	1.0	3.0§	1.6m	.40	5	8	PROM	B279	ML183a
103	MM5243J#2	512	4	SE	MXG	1.0u	660m	12	5.0	1.0	3.0§	1.6m	.40	0	7	PROM	B279	ML183a
104	HRM2048#3	512	4	SE	TAX	500n	640m♦	0.0	5.0	2.0	.80			0	7	PR Non-Vol RMM	B91	DL42a
105	RO6-2048S#2	512	4	SS	MPN	1.5u	300mt	12	5.0	.80	-1.5§	1.6m	.40	5	C			
106	RO7-2048S#2	512	4	SS	MPN	1.5u	300mt	12	5.0	.80	-1.5§	1.6m	.40	0	7			
107	CRC3501-1-2XXX#2	512	5	DC	MPC	800n	400mØ	0.0	5.0	.50	4.3			2	8		B6a	ML13a
108	CRC3501-2-2XXX#2	512	5	DC	MPC	800n	400mØ	0.0	5.0	.50	4.3			2	8		B6c	FL4

SYMBOLS AND CODES EXPLAINED IN INTERPRETER

3. READ ONLY MEMORIES (ROMS)

IN ORDER OF (1)No.WDS(2)No.BITS/WD(3)OP.MODE PRG.CODE(4)STRUCT.(5)MAX ACC.TIME(6)TYPE No.

LINE No.	6 TYPE NUMBER	ORGANIZATION 1 NO. WORDS	2 BITS PER WORD	3 OP MODE PROG CODE	4 STRUC-TURE CODE	5 MAX. ACCESS TIME (S)	MAX. POWER DISS. (W)	POWER SUPPLY SPAN NEG. (V)	POS. (V)	INPUT LOGIC LEVELS MAX. '0' (V)	MIN. '1' (V)	MIN.OUTPUT SINK CURRENT (A)	@ OUT (V)	OPER TEMP RNGE CODE -	+	GENERAL DESCRIPTION	DRAWINGS FUNCTIONAL EQUIVALENT NUMBER	OUTLINE
1	HROM2560-2	512	5	DC	MPX	600n	50m†	0.0	10	.40	4.0	3.3m$	2.4	5	C		C29	ML91
2	EA3500	512	5	DC	MPX	850n	90m†	13	0.0	-2.0	-9.0			5	8	fc 100kHz	B37	DL24bb
3	FDR116Z	512	5	DC	MPX	850n	90m†	14	0.0	-9.0	-2.0			5	8		C7	DL24bb
4	MD6225	512	5	SC	BTC	75n	685m	0.0	5.25	.85	2.0	15m	.45	0	7			DL18a
5	MD5225	512	5	SC	BTC	100n	685m	0.0	5.5	.80	2.0	10m	.40	5	C			DL18a
6	6225-1D	512	5	SC	BTD	75n	850m♦	0.0	5.0	.80	2.0Δ	10m	.50	0	7		B221	ML210a
7	5225-1D	512	5	SC	BTD	90n	850m♦	0.0	5.0	.80	2.0Δ	8.0m	.50	5	C		B221	ML210a
8	6225-1J	512	5	SC	BTD	100n	850m	0.0	5.0	.80	2.0Δ	15m	.50	0	7	ROM	PN18bb	DL18q
9	6225-1N	512	5	SC	BTD	100n	850m	0.0	5.0	.80	2.0Δ	15m	.50	0	7	ROM	PN18bb	DL18bd
10	5225-1J	512	5	SC	BTD	175n	850m	0.0	5.0	.80	2.0Δ	10m	.50	5	C	ROM	PN18bb	DL18q
11	5225-1N	512	5	SC	BTD	175n	850m	0.0	5.0	.80	2.0Δ	10m	.50	5	C	ROM	PN18bb	DL18bd
12	6225D	512	5	SC	BTX	75n	625m	0.0	5.0	.80	2.0	16m	.45	0	7		C39	ML55
13	5225D	512	5	SC	BTX	100n	625m	0.0	5.0	.80	2.0	10m	.45	5	C		C39	ML55
14	RO3-2560	512	5	SC	MNI	450n	175m	0.0	5.0	.65	2.2§	1.6m	.45	0	7		B181	ML244
15	S8614#2	512	5	SC	MPI	500n	595m	12	5.0	.60	3.7			0	7		C48	DL24a
16	S8773#2	512	5	SC	MPI	550n	595m	12	5.0	.60	3.7			0	6		C48	DL24a
17	MCS2004	512	5	SC	MPN	800n	450mØ	12	5.0	.80	3.5			2	8		PN24z	DLØ
18	IM7604CDG	512	5	SC	MPX	750n	430mØ	0.0	12	10*	4.0	4.0	3.0	2	7		B3a	ML27
19	IM7605CDG	512	5	SC	MPX	750n	430mØ	0.0	12	10*	4.0	4.0	3.0	2	7		B3b	ML27
20	MCM1150LA#2	512	5	SC	MPX	800n	600mØ	24	0.0	.30	-16	10uΔ	-12	2	8		B77	DL16cf
21	MCM1150LB	512	5	SC	MPX	800n	600mØ	24	0.0	.30	-16	10uΔ	-12	2	8		B77a	DL16cf
22	TMS2500JC#1	512	5	SC	MXX	400n	400m	12	5.0	1.0	3.5§	3.2m	.80	2	8		B64	ML47d
23	TMS2500NC#1	512	5	SC	MXX	400n	400m	12	5.0	1.0	3.5§	3.2m	.80	2	8		B64	DL24bu
24	C3304A	512	8		BTD	70n	950m	0.0	5.0			15m		0	7		B165	DL24bk
25	D3304A	512	8		BTD	70n	950m	0.0	5.0			15m		0	7		B165	DL24ah
26	C3304A4	512	8		BTD	90n	950m	0.0	5.0			15m		0	7		B165	DL24bk
27	C3304A6	512	8		BTD	90n	700m	0.0	5.0			15m		0	7		B165	DL24bk
28	D3304A4	512	8		BTD	90n	950m	0.0	5.0			15m		0	7		B165	DL24ah
29	D3304A6	512	8		BTD	90n	700m	0.0	5.0			15m		0	7		B165	DL24ah
30	RC82S240N	512	8		BTX	90n	925m	0.0	5.0	.80	2.0Δ	9.6m	.50	5	C	ROM	B413	DL24ar
31	RC82S241F	512	8		BTX	90n	170u†	0.0	5.0	.80	2.0§	9.6m	.50	5	C	ROM	B413	DL24ch
32	RC82S241N	512	8		BTX	90n	925m	0.0	5.0	.80	2.0§	9.6m	.50	5	C	ROM	B413	DL24ar
33	6247	512	8		BXD	60n	850m	0.0	5.0	.80	2.0	10m	.50	0	7		B127	ML47c
34	5247	512	8		BXD	75n	850m	0.0	5.0	.80	2.0	8.0m	.50	5	C		B127	ML47c
35	CD40032D	512	8		MCX	400n	20m†	0.0	12	.80	8.4	1.8m	.50	5	C		PN24ag	DLØ
36	CD40032E	512	8		MCX	400n	20m†	0.0	12	.80	8.4	1.8m	.50	5	C		PN24ag	DLØ
37	MF7110	512	8	DC	MPG	350n	850m	9.0	5.0	.80	3.0	1.6m	.40	0	7		B108	ML8
38	EA3300#1	512	8	DC	MPX	1.5u	90m†	13	0.0	-2.0	-9.0			0	7	fc 100kHz	B36	DL24bb
39	DM7696D	512	8	S	BTX	100n		0.0	5.0	.80	2.0§	12m	.40	5	C		B152	ML130
40	DM8696D	512	8	S	BTX	100n		0.0	5.0	.80	2.0§	12m	.40	0	7		B152	ML130
41	DM8696N	512	8	S	BTX	100n		0.0	5.0	.80	2.0§	12m	.40	0	7		B152	DL24af
42	AM9214DC	512	8	S	MNG	500n	1.0 Ø	0.0	5.0	.80	2.0§	2.4m	.40	0	7		B443	DL24eu
43	AM9214DM	512	8	S	MNG	500n	1.0 Ø	0.0	5.0	.80	2.0§	2.4m	.40	5	C		B443	DL24eu
44	C3304#1	512	8	SC	BTD	65n	918m	0.0	5.0	.85	2.0	15m	.45	0	7		PN24ac	DL24bk
45	6248-1J	512	8	SC	BTD	70n	775m	0.0	5.0	.80	2.0Δ	16m	.50	0	7	ROM	PN20n	DL20q
46	6248-1N	512	8	SC	BTD	70n	775m	0.0	5.0	.80	2.0Δ	16m	.50	0	7	ROM	PN20n	DL20p
47	6249-1J	512	8	SC	BTD	70n	775m	0.0	5.0	.80	2.0§	16m	.50	0	7	ROM	PN20n	DL20q
48	6249-1N	512	8	SC	BTD	70n	775m	0.0	5.0	.80	2.0§	16m	.50	0	7	ROM	PN20n	DL20p
49	C3324A	512	8	SC	BTD	70n	950m	0.0	5.0	.85	2.0§	15m	.45	0	7		B165	DL24bk
50	D3324A	512	8	SC	BTD	70n	950m	0.0	5.0	.85	2.0§	15m	.45	0	7		B165	DL24ah
51	6240-1D	512	8	SC	BTD	75n	140u%	0.0	5.0	8.0	2.0Δ	10	.50	0	7		B130	ML207d
52	6241-1D	512	8	SC	BTD	75n	140u%	0.0	5.0	8.0	2.0§	10	.50	0	7		B130	ML207d
53	6241-1J	512	8	SC	BTD	75n	140u%	0.0	5.0	.80	2.0§	10m	.50	0	7	ROM	PN24ea	DL24cn
54	5248-1J	512	8	SC	BTD	80n	775m	0.0	5.0	.80	2.0Δ	12m	.50	5	C	ROM	PN20n	DL20q
55	5248-1N	512	8	SC	BTD	80n	775m	0.0	5.0	.80	2.0Δ	12m	.50	5	C	ROM	PN20n	DL20p
56	5249-1J	512	8	SC	BTD	80n	775m	0.0	5.0	.80	2.0§	12m	.50	5	C	ROM	PN20n	DL20q
57	5249-1N	512	8	SC	BTD	80n	775m	0.0	5.0	.80	2.0§	12m	.50	5	C	ROM	PN20n	DL20p
58	5240-1D	512	8	SC	BTD	90n	140u%	0.0	5.0	.80	2.0Δ	8.0m	.50	5	C		B130	ML207d
59	5241-1D	512	8	SC	BTD	90n	140u%	0.0	5.0	.80	2.0§	8.0m	.50	5	C		B130	ML207d
60	5241-1J	512	8	SC	BTD	90n	140u%	0.0	5.0	8.0	2.0§	8.0	.50	5	C	ROM	PN24ea	DL24cn
61	C3324A4	512	8	SC	BTD	90n	950m	0.0	5.0	.85	2.0§	15m	.45	0	7		B165	DL24bk
62	D3324A4	512	8	SC	BTD	90n	950m	0.0	5.0	.85	2.0§	15m	.45	0	7		B165	DL24ah
63	RC82S215I	512	8	SC	BTD	90n	925m	0.0	5.0	.80	2.0§	9.6m	.50	5	C		B199c	DL24f
64	6240-1F	512	8	SC	BTD	100n	850m	0.0	5.0	.80	2.0Δ	10m	.50	0	7	ROM	PN24ea	FL50
65	6240-1J	512	8	SC	BTD	100n	140u%	0.0	5.0	.80	2.0Δ	10m	.50	0	7	ROM	PN24ea	DL24cn
66	6240-1N	512	8	SC	BTD	100n	850m	0.0	5.0	.80	2.0Δ	10m	.50	0	7	ROM	PN24ea	DL24co
67	6241-1F	512	8	SC	BTD	100n	850m	0.0	5.0	.80	2.0§	10m	.50	0	7	ROM	PN24ea	FL50
68	6241-1N	512	8	SC	BTD	100n	850m	0.0	5.0	.80	2.0§	10m	.50	0	7	ROM	PN24ea	DL24co
69	A5240D	512	8	SC	BTD	150n	850m	0.0	5.0	.80	2.0	8.0m	.50	5	C		B131a	ML47c
70	A5241D	512	8	SC	BTD	150n	850m	0.0	5.0	.80	2.0§	8.0m	.50	5	C		B131a	ML47c
71	A6240D	512	8	SC	BTD	150n	850m	0.0	5.0	.80	2.0	10m	.50	0	7		B131a	ML47c
72	A6241D	512	8	SC	BTD	150n	850m	0.0	5.0	.80	2.0§	10m	.50	0	7		B131a	ML47c
73	5240-1F	512	8	SC	BTD	175n	850m	0.0	5.0	.80	2.0Δ	8.0m	.50	5	C	ROM	PN24ea	FL50
74	5240-1J	512	8	SC	BTD	175n	140u%	0.0	5.0	8.0	2.0Δ	8.0m	.50	5	C	ROM	PN24ea	DL24cn
75	5240-1N	512	8	SC	BTD	175n	850m	0.0	5.0	.80	2.0Δ	8.0m	.50	5	C	ROM	PN24ea	DL24co
76	5241-1F	512	8	SC	BTD	175n	850m	0.0	5.0	.80	2.0§	8.0m	.50	5	C	ROM	PN24ea	FL50
77	5241-1N	512	8	SC	BTD	175n	850m	0.0	5.0	.80	2.0§	8.0m	.50	5	C	ROM	PN24ea	DL24co
78	S8205Y	512	8	SC	BTX	60n	895m	0.0	5.0	.85	2.0§	9.6m	.45	5	C		B32	ML21b
79	DM7595D	512	8	SC	BTX	80n	790m	0.0	5.0	.80	2.0	12m	.40	5	C		B152	ML184
80	DM7595J	512	8	SC	BTX	80n	790m	0.0	5.0	.80	2.0	12m	.40	5	C		B152	DL24cc
81	DM7596D	512	8	SC	BTX	80n	850m	0.0	5.0	.80	2.0§	12m	.40	5	C		B152	ML184
82	DM7596J	512	8	SC	BTX	80n	850m	0.0	5.0	.80	2.0§	12m	.40	5	C		B152	DL24cc
83	DM7795J	512	8	SC	BTX	80n	790m	0.0	5.0	.80	2.0	12m	.40	5	C		B152a	DL24cc
84	DM7796J	512	8	SC	BTX	80n	850m	0.0	5.0	.80	2.0§	12m	.40	5	C		B152a	DL24cc
85	DM8595D	512	8	SC	BTX	80n	790m	0.0	5.0	.80	2.0	12m	.40	0	7		B152	ML184
86	DM8595J	512	8	SC	BTX	80n	790m	0.0	5.0	.80	2.0	12m	.40	0	7		B152	DL24cc
87	DM8595N	512	8	SC	BTX	80n	790m	0.0	5.0	.80	2.0	12m	.40	0	7		B152	DL24au
88	DM8596D	512	8	SC	BTX	80n	850m	0.0	5.0	.80	2.0§	12m	.40	0	7		B152	ML184
89	DM8596J	512	8	SC	BTX	80n	850m	0.0	5.0	.80	2.0§	12m	.40	0	7		B152	DL24cc
90	DM8596N	512	8	SC	BTX	80n	850m	0.0	5.0	.80	2.0§	12m	.40	0	7		B152	DL24au
91	DM8795J	512	8	SC	BTX	80n	790m	0.0	5.0	.80	2.0	12m	.40	0	7		B152a	DL24cc
92	DM8795N	512	8	SC	BTX	80n	790m	0.0	5.0	.80	2.0	12m	.40	0	7		B152a	DL24au
93	DM8796J	512	8	SC	BTX	80n	850m	0.0	5.0	.80	2.0§	12m	.40	0	7		B152a	DL24cc
94	DM8796N	512	8	SC	BTX	80n	850m	0.0	5.0	.80	2.0§	12m	.40	0	7		B152a	DL24au
95	N82S147AG	512	8	SC	BXX	45n			7.0	0.80	2.0§	9.6m	0.45	0	7	PROM	B720	DL20Ø
96	SCP1831	512	8	SC	MCG	400n	5.0m	0.0	10	.01%	9.99§			5	C	PR	B354	DLØ
97	SCP1832	512	8	SC	MCG	400n	60m†	0.0	10	.01%	9.9	2.5	.50	5	C	PR	B459	DLØ
98	SCP1831L	512	8	SC	MCG	850n	500u	0.0	5.0	.01%	4.99			5	C	PR	B354	DLØ
99	SCP1832L	512	8	SC	MCG	850n	15m†	0.0	5.0	.01%	4.9	2.8	.50	5	C	PR	B459	DLØ
100	SCP1831C	512	8	SC	MCX	400n	5.0m†	0.0	10	3.0	7.0	3.6m	10	5	C	ROM	B354	DLØ
101	SCP1831E	512	8	SC	MCX	400n	5.0m†	0.0	10	3.0	7.0	3.6m	10	4	8	ROM	B354	DL24ek
102	SCP1832C	512	8	SC	MCX	400n	5.0m†	0.0	10	3.0	7.0	3.6m	10	5	C	ROM	B355	DLØ
103	SCP1832E	512	8	SC	MCX	400n	5.0m†	0.0	10	3.0	7.0	3.6m	10	4	8	ROM	B355	DL24ek
104	SCP1831LC	512	8	SC	MCX	850n	500u†	0.0	5.0	1.5	3.5	2.2m	5.0	5	C	ROM	B354	DLØ
105	SCP1831LE	512	8	SC	MCX	850n	500u†	0.0	5.0	1.5	3.5	2.2m	5.0	4	8	ROM	B354	DL24ek
106	SCP1832LC	512	8	SC	MCX	850n	500u†	0.0	5.0	1.5	3.5	2.2m	5.0	5	C	ROM	B355	DLØ
107	SCP1832LE	512	8	SC	MCX	850n	500u†	0.0	5.0	1.5	3.5	2.2m	5.0	4	8	ROM	B355	DL24ek
108	SYP2530	512	8	SC	MNG	550n	250m	0.0	5.0	.80	2.0	2.4m	.40	0	7		B112	DL24ad
109	RO3-4096	512	8	SC	MNI	500n	225m	0.0	5.0	.65	2.2§	1.6m	.45	0	7		B181a	DL22y
110	SYC3515	512	8	SC	MNIØ	500n	1.0 Ø	0.0	5.0	.80	2.0	2.4m	.40	0	7	PROM	B286	DL24dk

MEMORY

SYMBOLS AND CODES EXPLAINED IN INTERPRETER

3. READ ONLY MEMORIES (ROMS)

IN ORDER OF (1)No.WDS(2)No.BITS/WD(3)OP.MODE PRG.CODE(4)STRUCT.(5)MAX ACC.TIME(6)TYPE No.

LINE No.	6 TYPE NUMBER	ORGANIZATION 1 NO. WORDS	2 BITS PER WORD	3 OP MODE PROG CODE	4 STRUC-TURE CODE	5 MAX. ACCESS TIME (S)	MAX. POWER DISS. (W)	POWER SUPPLY SPAN NEG. (V)	POS. (V)	INPUT LOGIC LEVELS MAX. '0' (V)	MIN. '1' (V)	MIN.OUTPUT SINK CURRENT (A)	@ OUT (V)	OPER TEMP RNGE CODE -	+	GENERAL DESCRIPTION	DRAWINGS. FUNCTIONAL EQUIVALENT NUMBER	OUTLINE
1	SYP3515	512	8	SC	MNI	500n	1.0 Ø	0.0	5.0	.80	2.0	2.4m	.40	0	7	PROM	B286	DL24aj
2	SYC2530	512	8	SC	MNIØ	550n	1.0 Ø	0.0	5.0	.80	2.0§	2.4m	.40	0	7	PROM	B285	DL24dk
3	SYC3514	512	8	SC	MNIØ	700n	1.0 Ø	0.0	5.0	.80	2.0	2.4m	.40	0	7	PROM	B286	DL24dk
4	SYP3514	512	8	SC	MNI	700n	1.0 Ø	0.0	5.0	.80	2.0	2.4m	.40	0	7	PROM	B286	DL24aj
5	SFF70612KM#1	512	8	SC	MPA	7.0u	460mØ	12	5.0	.80	3.0	2.0m†	1.0	5	C		B96	DL24w
6	SFF70612KT#1	512	8	SC	MPA	7.0u	460mØ	12	5.0	.80	3.0	2.0m†	1.0	2	8		B96	DL24w
7	M240D1B	512	8	SC	MPG	610n	470m	12	5.0	.55	2.5	2.4m	.40	0	7		B90	DL24dc
8	2530I	512	8	SC	MPG	700n	730mØ	12	5.0	.60	3.4§	1.6m	.50	0	7		B112	DL24ab
9	2530N	512	8	SC	MPG	700n	730mØ	12	5.0	.60	3.4§	1.6m	.50	0	7		B112	DL24ar
10	ITT3514-1	512	8	SC	MPG	700n	580m	12	5.0	.40%	2.4	2.4m	.40	0	7		B265	DLØ
11	M240D1A	512	8	SC	MPG	810n	470m	12	5.0	.55	2.5	2.4m	.40	0	7		B90	DL24dc
12	ITT3514-2	512	8	SC	MPG	1.0u	580m	12	5.0	.40%	2.4	2.4m	.40	0	7		B265	DLØ
13	MN1200	512	8	SC	MPG	1.2u	250m†	14	0.0	-6.0	-.10	1.6m%	-4.5	3	6		B148	ML34a
14	MK2500P#1	512	8	SC	MPI	700n	476m♦	12	5.0	.80	2.4	1.6m	.40	0	7		B73	ML21
15	MK2600P#1	512	8	SC	MPI	700n	476m♦	12	5.0	.80	2.4	1.6m	.40	0	7		B99	ML21
16	MM4233D	512	8	SC	MPI	1.0u	510mØ	12	5.0	1.0	4.0§	2.4m	.40	5	C		B171	DL24ay
17	MM4233J	512	8	SC	MPI	1.0u	510mØ	12	5.0	1.0	4.0§	2.4m	.40	5	C		B171	DL24cc
18	MM5233D	512	8	SC	MPI	1.0u	510mØ	12	5.0	1.0	4.0§	2.4m	.40	0	7		B171	DL24ay
19	MM5233J	512	8	SC	MPI	1.0u	510mØ	12	5.0	1.0	4.0§	2.4m	.40	0	7		B171	DL24cc
20	MM5233N	512	8	SC	MPI	1.0u	510mØ	12	5.0	1.0	4.0§	2.4m	.40	0	7		B171	DL24af
21	S3514-1W	512	8	SC	MPI	1.0u	500m	12	5.0								B90	DL24bv
22	S3514-2L	512	8	SC	MPI	1.0u	500m	12	5.0								B90	ML72e
23	S5232-1W#1	512	8	SC	MPI	1.0u	500m	12	5.0								B73	DL24bv
24	S5232-2L#1	512	8	SC	MPI	1.0u	500m	12	5.0								B73	ML72e
25	MCM1140L#1	512	8	SC	MPX	800n	600mØ	14	14	.30	-16	10uΔ	-14	2	8		B76	DL16cf
26	MM4232J#1	512	8	SC	MPX	1.0u	629mØ	12	5.0	1.0	3.0§	1.6m	.40	5	C		B96	DL24cc
27	MM5232J#1	512	8	SC	MPX	1.0u	629mØ	12	5.0	1.0	3.0§	1.6m	.40	0	7		B96	DL24cc
28	MM5232N#1	512	8	SC	MPX	1.0u	629mØ	12	5.0	1.0	3.0§	1.6m	.40	0	7		B96	DL24au
29	FDR131Z#1	512	8	SC	MPX	1.5u	90m†	14	0.0	-9.0	-2.0			0	7	ROM	B36	DL24bb
30	uPD503D	512	8	SC	MPX	4.0u		24	0.0	-2.5%	-9.0			1	7		B219	DL24bh
31	HN3250P	512	8	SC	MPX	7.0u	300mØ	14	0.0	-2.0	-5.4			2	7		B88	ML88a
32	GER542W1#4	512	8	SC	MXR	500n	350m†	12	5.0	1.0Ø	4.0						B8	ML30
33	UA2596D4#1	512	8	SC	MXX	900n	600m	20	0.0	.80♦	2.7	1.6m	.40	5	C		B9c	DL24ay
34	UA2596D8#1	512	8	SC	MXX	900n	600m	20	0.0	.80♦	2.7	1.6m	.40	5	C		B9c	DL28b
35	UA3596D4#1	512	8	SC	MXX	900n	600m	20	0.0	.80♦	2.7	1.6m	.40	2	7		B9c	DL24ay
36	UA3596D8#1	512	8	SC	MXX	900n	600m	20	0.0	.80♦	2.7	1.6m	.40	2	7		B9c	DL28b
37	TMS4300JC#4	512	8	SC	MXX	2.0u	250m†	12	12	-3.0	-9.0	2.0m	-2.0	2	8		B58	ML47b
38	TMS4400JC	512	8	SC	MXX	2.0u	250m†	24	0.0	-3.0	-8.0	12m	.40	2	8		B62	ML47b
39	TMS4400JC#2	512	8	SC	MXX	2.0u	250m†	24	0.0	-3.0	-8.0	12m	.40	2	8		B62	ML47d
40	TMS4400NC	512	8	SC	MXX	2.0u	250m†	24	0.0	-3.0	-8.0	12m	.40	2	8		B62	DL24bu
41	TMS4400NC#2	512	8	SC	MXX	2.0u	250m†	24	0.0	-3.0	-8.0	12m	.40	2	8		B62	DL24bu
42	53RA481J	512	8	SE	BTD	30n	625m†	0.0	5.0	.80	2.0	16m	.50	5	C	PROM;Reg	B337	DL24cn
43	53RA481N	512	8	SE	BTD	30n	625m†	0.0	5.0	.80	2.0	16m	.50	5	C	PROM;Reg	B337	DL24co
44	53RA483J	512	8	SE	BTD	30n	625m†	0.0	5.0	.80	2.0	16m	.50	5	C	PROM;Reg	B337	ML282
45	53RA483N	512	8	SE	BTD	30n	625m†	0.0	5.0	.80	2.0	16m	.50	5	C	PROM;Reg	B337	DL24bi
46	53S480J	512	8	SE	BTD	30n	525m†	0.0	5.0	.80	2.0Δ	16m	.50	5	C	PROM	PN20n	DL20q
47	53S480N	512	8	SE	BTD	30n	525m†	0.0	5.0	.80	2.0Δ	16m	.50	5	C	PROM	PN20n	DL20p
48	53S481J	512	8	SE	BTD	30n	525m†	0.0	5.0	.80	2.0§	16m	.50	5	C	PROM	PN20n	DL20q
49	53S481N	512	8	SE	BTD	30n	525m†	0.0	5.0	.80	2.0§	16m	.50	5	C	PROM	PN20n	DL20p
50	53S482F	512	8	SE	BTD	30n		0.0	5.0	.80	2.0Δ	16m	.50	5	C	PROM	PN24ea	FL50
51	53S482J	512	8	SE	BTD	30n		0.0	5.0	.80	2.0Δ	16m	.50	5	C	PROM	PN24ea	DL24cn
52	53S482N	512	8	SE	BTD	30n		0.0	5.0	.80	2.0Δ	16m	.50	5	C	PROM	PN24ea	DL24co
53	53S483F	512	8	SE	BTD	30n		0.0	5.0	.80	2.0§	16m	.50	5	C	PROM	PN24ea	FL50
54	53S483J	512	8	SE	BTD	30n		0.0	5.0	.80	2.0§	16m	.50	5	C	PROM	PN24ea	DL24cn
55	53S483N	512	8	SE	BTD	30n		0.0	5.0	.80	2.0§	16m	.50	5	C	PROM	PN24ea	DL24co
56	63RA481J	512	8	SE	BTD	30n	625m†	0.0	5.0	.80	2.0	20m	.50	0	7	PROM;Reg	B337	DL24cn
57	63RA481N	512	8	SE	BTD	30n	625m†	0.0	5.0	.80	2.0	20m	.50	0	7	PROM;Reg	B337	DL24co
58	63RA483J	512	8	SE	BTD	30n	625m†	0.0	5.0	.80	2.0	20m	.50	0	7	PROM;Reg	B337	ML282
59	63RA483N	512	8	SE	BTD	30n	625m†	0.0	5.0	.80	2.0	20m	.50	0	7	PROM;Reg	B337	DL24bi
60	63S480J	512	8	SE	BTD	30n	525m†	0.0	5.0	.80	2.0Δ	16m	.45	0	7	PROM	PN20n	DL20q
61	63S480N	512	8	SE	BTD	30n	525m†	0.0	5.0	.80	2.0Δ	16m	.45	0	7	PROM	PN20n	DL20p
62	63S481J	512	8	SE	BTD	30n	525m†	0.0	5.0	.80	2.0§	16m	.45	0	7	PROM	PN20n	DL20q
63	63S481N	512	8	SE	BTD	30n	525m†	0.0	5.0	.80	2.0§	16m	.45	0	7	PROM	PN20n	DL20p
64	63S482F	512	8	SE	BTD	30n		0.0	5.0	.80	2.0Δ	16m	.45	0	7	PROM	PN24ea	FL50
65	63S482J	512	8	SE	BTD	30n		0.0	5.0	.80	2.0Δ	16m	.45	0	7	PROM	PN24ea	DL24cn
66	63S482N	512	8	SE	BTD	30n		0.0	5.0	.80	2.0Δ	16m	.45	0	7	PROM	PN24ea	DL24co
67	63S483F	512	8	SE	BTD	30n		0.0	5.0	.80	2.0§	16m	.45	0	7	PROM	PN24ea	FL50
68	63S483J	512	8	SE	BTD	30n		0.0	5.0	.80	2.0§	16m	.45	0	7	PROM	PN24ea	DL24cn
69	63S483N	512	8	SE	BTD	30n		0.0	5.0	.80	2.0§	16m	.45	0	7	PROM	PN24ea	DL24co
70	29624DC	512	8	SE	BTD	35n	850m	0.0	5.0	.80	2.0Δ	16m	.50	0	7	PROM	B313	DLØ
71	29624DM	512	8	SE	BTD	35n	850m	0.0	5.0	.80	2.0Δ	16m	.50	5	C	PROM	B313	DLØ
72	29625DC	512	8	SE	BTD	35n	850m	0.0	5.0	.80	2.0§	16m	.50	0	7	PROM	B313	DLØ
73	29625DM	512	8	SE	BTD	35n	850m	0.0	5.0	.80	2.0§	16m	.50	5	C	PROM	B313	DLØ
74	53PS480J	512	8	SE	BTD	36n	525m†	0.0	5.0	.80	2.0Δ	16m	.50	5	C	PROM;Pwr Sw	PN20n	DL20q
75	53PS480N	512	8	SE	BTD	36n	525m†	0.0	5.0	.80	2.0Δ	16m	.50	5	C	PROM;Pwr Sw	PN20n	DL20p
76	53PS481J	512	8	SE	BTD	36n	525m†	0.0	5.0	.80	2.0§	16m	.50	5	C	PROM;Pwr Sw	PN20n	DL20q
77	53PS481N	512	8	SE	BTD	36n	525m†	0.0	5.0	.80	2.0§	16m	.50	5	C	PROM;Pwr Sw	PN20n	DL20p
78	53PS482F	512	8	SE	BTD	36n	525m†	0.0	5.0	.80	2.0Δ	16m	.50	5	C	PROM;Pwr Sw	PN24ea	FL50
79	53PS482J	512	8	SE	BTD	36n	525m†	0.0	5.0	.80	2.0Δ	16m	.50	5	C	PROM;Pwr Sw	PN24ea	DL24cn
80	53PS482N	512	8	SE	BTD	36n	525m†	0.0	5.0	.80	2.0Δ	16m	.50	5	C	PROM;Pwr Sw	PN24ea	DL24co
81	53PS483F	512	8	SE	BTD	36n	525m†	0.0	5.0	.80	2.0§	16m	.50	5	C	PROM;Pwr Sw	PN24ea	FL50
82	53PS483J	512	8	SE	BTD	36n	525m†	0.0	5.0	.80	2.0§	16m	.50	5	C	PROM;Pwr Sw	PN24ea	DL24cn
83	53PS483N	512	8	SE	BTD	36n	525m†	0.0	5.0	.80	2.0§	16m	.50	5	C	PROM;Pwr Sw	PN24ea	DL24co
84	63PS480J	512	8	SE	BTD	36n	525m†	0.0	5.0	.80	2.0Δ	16m	.45	0	7	PROM;Pwr Sw	PN20n	DL20q
85	63PS480N	512	8	SE	BTD	36n	525m†	0.0	5.0	.80	2.0Δ	16m	.45	0	7	PROM;Pwr Sw	PN20n	DL20p
86	63PS481J	512	8	SE	BTD	36n	525m†	0.0	5.0	.80	2.0§	16m	.45	0	7	PROM;Pwr Sw	PN20n	DL20q
87	63PS481N	512	8	SE	BTD	36n	525m†	0.0	5.0	.80	2.0§	16m	.45	0	7	PROM;Pwr Sw	PN20n	DL20p
88	63PS482F	512	8	SE	BTD	36n	525m†	0.0	5.0	.80	2.0Δ	16m	.45	0	7	PROM;Pwr Sw	PN24ea	FL50
89	63PS482J	512	8	SE	BTD	36n	525m†	0.0	5.0	.80	2.0Δ	16m	.45	0	7	PROM;Pwr Sw	PN24ea	DL24cn
90	63PS482N	512	8	SE	BTD	36n	525m†	0.0	5.0	.80	2.0Δ	16m	.45	0	7	PROM;Pwr Sw	PN24ea	DL24co
91	63PS483F	512	8	SE	BTD	36n	525m†	0.0	5.0	.80	2.0§	16m	.45	0	7	PROM;Pwr Sw	PN24ea	FL50
92	63PS483J	512	8	SE	BTD	36n	525m†	0.0	5.0	.80	2.0§	16m	.45	0	7	PROM;Pwr Sw	PN24ea	DL24cn
93	63PS483N	512	8	SE	BTD	36n	525m†	0.0	5.0	.80	2.0§	16m	.45	0	7	PROM;Pwr Sw	PN24ea	DL24co
94	29626DC	512	8	SE	BTD	40n	850m	0.0	5.0	.80	2.0Δ	16m	.50	0	7	PROM;Pwr Sw	B313a	DLØ
95	29626DM	512	8	SE	BTD	40n	850m	0.0	5.0	.80	2.0Δ	16m	.50	5	C	PROM;Pwr Sw	B313a	DLØ
96	29627DC	512	8	SE	BTD	40n	850m	0.0	5.0	.80	2.0§	16m	.50	0	7	PROM;Pwr Sw	B313a	DLØ
97	29627DM	512	8	SE	BTD	40n	850m	0.0	5.0	.80	2.0§	16m	.50	5	C	PROM;Pwr Sw	B313a	DLØ
98	MCM7640L	512	8	SE	BTD	40n		0.0	5.0							Open Coll	PN24an	DL24cq
99	MCM7640P	512	8	SE	BTD	40n		0.0	5.0							Open Coll	PN24an	DL24br
100	MCM7641L	512	8	SE	BTD	40n		0.0	5.0							Tri State	PN24an	DL24cq
101	MCM7641P	512	8	SE	BTD	40n		0.0	5.0							Tri State	B3256	DL24br
102	S82S146F	512	8	SE	BTD	45n	775m	0.0	5.0	.85	2.0Δ	9.6m	.45	0	7	PROM	74-147	DL20o
103	AM27S26DC	512	8	SE	BTD	50n	925m	0.0	5.0	.80	2.0Δ	16m	.38	0	7	PROM	B448	DL22h
104	AM27S26DM	512	8	SE	BTD	50n	925m	0.0	5.0	.80	2.0Δ	16m	.38	5	C	PROM	B448	DL22h
105	HM9-7640AR5	512	8	SE	BTD	50n	900m	0.0	5.0	.80	2.0Δ	16m	.45	0	7	PROM,Latched	B388b	FL55
106	HM9-7640A5	512	8	SE	BTD	50n	850m	0.0	5.0	.80	2.0Δ	16m	.45	0	7	PROM	B413	FL55
107	53LS480J	512	8	SE	BTD	51n	275m†	0.0	5.0	.80	2.0Δ	12m	.50	5	C	PROM	PN20n	DL20q
108	53LS480N	512	8	SE	BTD	51n	275m†	0.0	5.0	.80	2.0Δ	12m	.50	5	C	PROM	PN20n	DL20p

SYMBOLS AND CODES EXPLAINED IN INTERPRETER

3. READ ONLY MEMORIES (ROMS)

IN ORDER OF (1)No.WDS(2)No.BITS/WD(3)OP.MODE PRG.CODE(4)STRUCT.(5)MAX ACC.TIME(6)TYPE No.

LINE No.	6 TYPE NUMBER	ORGANIZATION 1 NO. WORDS	2 BITS PER WORD	3 OP MODE PROG CODE	4 STRUC-TURE CODE	5 MAX. ACCESS TIME (S)	MAX. POWER DISS. (W)	POWER SUPPLY SPAN NEG. (V)	POS. (V)	INPUT LOGIC LEVELS MAX. '0' (V)	MIN. '1' (V)	MIN.OUTPUT SINK CURRENT (A)	@ OUT (V)	OPER TEMP RNGE CODE -	+	GENERAL DESCRIPTION	DRAWINGS FUNCTIONAL EQUIVALENT NUMBER	OUTLINE
1	53LS481J	512	8	SE	BTD	51n	275m†	0.0	5.0	.80	2.0§	12m	.50	5	C	PROM	PN20n	DL20q
2	53LS481N	512	8	SE	BTD	51n	275m†	0.0	5.0	.80	2.0§	12m	.50	5	C	PROM	PN20n	DL20p
3	53LS482F	512	8	SE	BTD	51n		0.0	5.0	.80	2.0Δ	12m	.50	5	C	PROM	PN24ea	FL50
4	53LS482J	512	8	SE	BTD	51n		0.0	5.0	.80	2.0Δ	12m	.50	5	C	PROM	PN24ea	DL24cn
5	53LS482N	512	8	SE	BTD	51n		0.0	5.0	.80	2.0Δ	12m	.50	5	C	PROM	PN24ea	DL24co
6	53LS483F	512	8	SE	BTD	51n		0.0	5.0	.80	2.0§	12m	.50	5	C	PROM	PN24ea	FL50
7	53LS483J	512	8	SE	BTD	51n		0.0	5.0	.80	2.0§	12m	.50	5	C	PROM	PN24ea	DL24cn
8	53LS483N	512	8	SE	BTD	51n		0.0	5.0	.80	2.0§	12m	.50	5	C	PROM	PN24ea	DL24co
9	63LS480J	512	8	SE	BTD	51n	275m†	0.0	5.0	.80	2.0Δ	16m	.45	0	7	PROM	PN20n	DL20q
10	63LS480N	512	8	SE	BTD	51n	275m†	0.0	5.0	.80	2.0Δ	16m	.45	0	7	PROM	PN20n	DL20p
11	63LS481J	512	8	SE	BTD	51n	275m†	0.0	5.0	.80	2.0§	16m	.45	0	7	PROM	PN20n	DL20q
12	63LS481N	512	8	SE	BTD	51n	275m†	0.0	5.0	.80	2.0§	16m	.45	0	7	PROM	PN20n	DL20p
13	63LS482F	512	8	SE	BTD	51n		0.0	5.0	.80	2.0Δ	16m	.45	0	7	PROM	PN24ea	FL50
14	63LS482J	512	8	SE	BTD	51n		0.0	5.0	.80	2.0Δ	16m	.45	0	7	PROM	PN24ea	DL24cn
15	63LS482N	512	8	SE	BTD	51n		0.0	5.0	.80	2.0Δ	16m	.45	0	7	PROM	PN24ea	DL24co
16	63LS483F	512	8	SE	BTD	51n		0.0	5.0	.80	2.0§	16m	.45	0	7	PROM	PN24ea	FL50
17	63LS483J	512	8	SE	BTD	51n		0.0	5.0	.80	2.0§	16m	.45	0	7	PROM	PN24ea	DL24cn
18	63LS483N	512	8	SE	BTD	51n		0.0	5.0	.80	2.0§	16m	.45	0	7	PROM	PN24ea	DL24co
19	93438DC	512	8	SE	BTD	55n	875m	0.0	5.0	.80	2.0	16m	.45	0	7	Field Program	74S474	DL24bg
20	D3604A-2	512	8	SE	BTD	60n	875m	0.0	5.0	.85	2.0Δ	15m	.45	0	7	PROM	B165	DL24cs
21	D3624A-2	512	8	SE	BTD	60n	875m	0.0	5.0	.85	2.0§	15m	.45	0	7	PROM	B165	DL24cs
22	HM9-7647R5	512	8	SE	BTD	60n	925m	0.0	5.0	.85	2.0§	16m	.50	0	7	PROM,Latched	B388	FL55
23	29620DC	512	8	SE	BTD	65n	775m	0.0	5.0	.80	2.0Δ	16m	.50	0	7	PROM	B312	DL∅
24	DM87S295J	512	8	SE	BTD	65n	850m	0.0	5.0	.80	2.0Δ	16m	.50	0	7	PROM	74S474	ML183a
25	DM87S295N	512	8	SE	BTD	65n	850m	0.0	5.0	.80	2.0Δ	16m	.50	0	7	PROM	74S474	DL24au
26	DM87S296J	512	8	SE	BTD	65n	850m	0.0	5.0	.80	2.0§	16m	.50	0	7	PROM	74S474	ML183a
27	DM87S296N	512	8	SE	BTD	65n	850m	0.0	5.0	.80	2.0§	16m	.50	0	7	PROM	74S474	DL24au
28	6340-1N	512	8	SE	BTD	70n	850m	0.0	5.0	.80	2.0Δ	16m	.50	0	7	PROM	PN24eb	DL24co
29	6341-1N	512	8	SE	BTD	70n	850m	0.0	5.0	.80	2.0§	16m	.50	0	7	PROM	PN24eb	DL24co
30	6348-1N	512	8	SE	BTD	70n	775m	0.0	5.0	.80	2.0Δ	16m	.50	0	7	PROM	PN20f	DL20p
31	6349-1N	512	8	SE	BTD	70n	775m	0.0	5.0	.80	2.0§	16m	.50	0	7	PROM	PN20f	DL20p
32	29622DC	512	8	SE	BTD	70n	775m	0.0	5.0	.80	2.0Δ	16m	.50	0	7	PROM;Pwr Sw	B312a	DL∅
33	D3604	512	8	SE	BTD	70n	950m	0.0	5.0	.85	2.0Δ	15m	.45	0	7	PROM	B165	ML133c
34	D3604A	512	8	SE	BTD	70n	875m	0.0	5.0	.85	2.0Δ	15m	.45	0	7	PROM	B165	DL24cs
35	D3624	512	8	SE	BTD	70n	950m	0.0	5.0	.85	2.0§	15m	.45	0	7	PROM	PN24ad	DL24ah
36	D3624A	512	8	SE	BTD	70n	875m	0.0	5.0	.85	2.0§	15m	.45	0	7	PROM	B165	DL24cs
37	HM3-7640AR2	512	8	SE	BTD	70n	900m	0.0	5.0	.80	2.0Δ	16m	.45	5	C	PROM,Latched	B388b	DL24cp
38	HM3-7640A2	512	8	SE	BTD	70n	850m	0.0	5.0	.80	2.0Δ	16m	.45	5	C	PROM	B413	DL24cp
39	HM3-7641AR2	512	8	SE	BTD	70n	900m	0.0	5.0	.80	2.0§	16m	.45	5	C	PROM,Latched	B388b	DL24cp
40	HM3-7641A2	512	8	SE	BTD	70n	850m	0.0	5.0	.80	2.0§	16m	.45	5	C	PROM	B413	DL24cp
41	MCM7640D	512	8	SE	BTD	70n	700m	0.0	5.0	.80	2.0Δ	16m	.45	0	7	PROM	PN24an	DL24cq
42	MCM7640DC	512	8	SE	BTD	70n	700m	0.0	5.0	.80	2.0Δ	16m	.45	0	7	PROM	PN24an	DL24cq
43	MCM7641D	512	8	SE	BTD	70n	700m	0.0	5.0	.80	2.0§	16m	.45	0	7	PROM	PN24an	DL24cq
44	DM77S295J	512	8	SE	BTD	75n	850m	0.0	5.0	.80	2.0Δ	16m	.50	5	C	PROM	74S474	ML183a
45	DM77S296J	512	8	SE	BTD	75n	850m	0.0	5.0	.80	2.0§	16m	.50	5	C	PROM	74S474	ML183a
46	SN74S474N	512	8	SE	BTD	75n	600m†	0.0	5.0	.80	2.0§	12m	.50	0	7	Field Program	PN24aj	DL24bx
47	5340-1F	512	8	SE	BTD	80n	850m	0.0	5.0	.80	2.0Δ	12m	.50	5	C	PROM	PN24eb	FL50
48	5340-1N	512	8	SE	BTD	80n	850m	0.0	5.0	.80	2.0Δ	12m	.50	5	C	PROM	PN24eb	DL24co
49	5341-1F	512	8	SE	BTD	80n	850m	0.0	5.0	.80	2.0§	12m	.50	5	C	PROM	PN24eb	FL50
50	5341-1N	512	8	SE	BTD	80n	850m	0.0	5.0	.80	2.0§	12m	.50	5	C	PROM	PN24eb	DL24co
51	5348-1N	512	8	SE	BTD	80n	775m	0.0	5.0	.80	2.0Δ	12m	.50	5	C	PROM	PN20f	DL20p
52	5349-1N	512	8	SE	BTD	80n	775m	0.0	5.0	.80	2.0§	12m	.50	5	C	PROM	PN20f	DL20p
53	29620DM	512	8	SE	BTD	80n	775m	0.0	5.0	.80	2.0Δ	16m	.50	5	C	PROM	B312	DL∅
54	HM3-7647R2	512	8	SE	BTD	80n	925m	0.0	5.0	.85	2.0§	16m	.50	5	C	PROM,Latched	B388	DL24cp
55	29622DM	512	8	SE	BTD	85n	775m	0.0	5.0	.80	2.0Δ	16m	.50	5	C	PROM;Pwr Sw	B312a	DL∅
56	MCM7640DM	512	8	SE	BTD	85n	700m	0.0	5.0	.80	2.0Δ	16m	.45	5	C	PROM	PN24an	DL24cq
57	MCM7641DM	512	8	SE	BTD	85n	700m	0.0	5.0	.80	2.0§	16m	.45	5	C	PROM	PN24an	DL24cq
58	SN54S474J	512	8	SE	BTD	85n	600m†	0.0	5.0	.80	2.0§	12m	.50	5	C	Field Program	PN24aj	MO015AA
59	SN54S474W	512	8	SE	BTD	85n	600m†	0.0	5.0	.80	2.0§	12m	.50	5	C	Field Program	PN24aj	MO019AA
60	SN54S475J	512	8	SE	BTD	85n	600m†	0.0	5.0	.80	2.0Δ	12m	.50	5	C	Field Program	PN24aj	MO015AA
61	SN54S475W	512	8	SE	BTD	85n	600m†	0.0	5.0	.80	2.0Δ	12m	.50	5	C	Field Program	PN24aj	MO019AA
62	D3604-4	512	8	SE	BTD	90n	950m	0.0	5.0	.85	2.0Δ	15m	.45	0	7	PROM	B165	ML133c
63	D3604-6	512	8	SE	BTD	90n	735m	0.0	5.0	.85	2.0	15m	.45	0	7	PROM	B165a	DL24ah
64	D3604AL	512	8	SE	BTD	90n	650m	0.0	5.0	.85	2.0Δ	15m	.45	0	7	PROM	B165	DL24cs
65	D3604L6	512	8	SE	BTD	90n	700m	0.0	5.0	.85	2.0Δ	15m	.45	0	7	PROM		ML133c
66	D3624-4	512	8	SE	BTD	90n	950m	0.0	5.0	.85	2.0§	15m	.45	0	7	PROM	PN24ad	DL24ah
67	MD3604	512	8	SE	BTD	90n	950m♦	0.0	5.0	.80	2.1Δ	10m	.45	5	C	Prom	B165a	ML133c
68	MD3624	512	8	SE	BTD	90n	950m♦	0.0	5.0	.80	2.1§	10m	.45	5	C	Prom	B165a	ML133c
69	RC82S115F	512	8	SE	BTD	90n	925m	0.0	5.0	.80	2.0§	9.6m	.50	5	C	PROM	B199a	DL24cb
70	RC82S115I	512	8	SE	BTD	90n	925m	0.0	5.0	.80	2.0§	9.6m	.50	5	C	PROM	B199a	DL24f
71	RC82S115N	512	8	SE	BTD	90n	925m	0.0	5.0	.80	2.0§	9.6m	.50	5	C	PROM	B199a	DL24ar
72	S82S115N	512	8	SE	BTD	90n	925m	0.0	5.0	.80	2.0§	9.6m	.50	5	C	PROM	B199a	DL24ar
73	S82S141N	512	8	SE	BTD	90n	170u%	0.0	5.0	.80	2.0§	9.6m	.50	5	C	Bipolar PROM	B413	DL24ar
74	IM5605CDG	512	8	SE	BTX	70n	171u%	0.0	5.0	.80	2.0Δ	40uΔ	5.5	0	7	PROM	B466	DL24ds
75	IM5605CJG	512	8	SE	BTX	70n	925m	0.0	5.0	.80	2.0	16m	.45	0	7	PROM	B250	DL24ac
76	IM5605MDG	512	8	SE	BTX	70n	171u%	0.0	5.0	.80	2.0Δ	100uΔ	5.5	5	C	PROM	B466	DL24ds
77	IM5625CDG	512	8	SE	BTX	70n	171u%	0.0	5.0	.80	2.0Ø	40uΔ	5.5	0	7	PROM	B466	DL24ds
78	IM5625CJG	512	8	SE	BTX	70n	925m	0.0	5.0	.80	2.0	16m	.45	0	7	PROM	B250	DL24ac
79	IM5625MDG	512	8	SE	BTX	70n	171u%	0.0	5.0	.80	2.0Ø	100uΔ	5.5	5	C	PROM	B466	DL24ds
80	5348-1D	512	8	SE	BTX	80n	775m	0.0	5.0	.80	2.0Δ	12m	.50	5	C	PROM	PN20f	ML161c
81	5349-1D	512	8	SE	BTX	80n	775m	0.0	5.0	.80	2.0§	12m	.50	5	C	PROM	PN20f	ML161c
82	IM5605MJG	512	8	SE	BTX	80n	925m	0.0	5.0	.80	2.0	16m	.45	5	C	PROM	B250	DL24ac
83	IM5625MJG	512	8	SE	BTX	80n	925m	0.0	5.0	.80	2.0	16m	.45	5	C	PROM	B250	DL24ac
84	5340-1D	512	8	SE	BTX	90n	700m♦	0.0	5.0	.80	2.0Δ	12m	.50	5	C	Fld Prog	B130a	ML207d
85	5340D	512	8	SE	BTX	90n	400m†	0.0	5.0	.80	2.0	8.0m	.50	5	C		B130	ML47c
86	5341-1D	512	8	SE	BTX	90n	700m♦	0.0	5.0	.80	2.0§	12m	.50	5	C	Fld Prog	B130a	ML207d
87	6340-1D	512	8	SE	BTX	90n	700m♦	0.0	5.0	.80	2.0Δ	16m	.50	0	7	Fld Prog	B130a	ML207d
88	6340D	512	8	SE	BTX	90n	400m†	0.0	5.0	.80	2.0	10m	.50	0	7		B130	ML47c
89	6341-1D	512	8	SE	BTX	90n	700m♦	0.0	5.0	.80	2.0§	16m	.50	0	7	Fld Prog	B130a	ML207d
90	RC82S140F	512	8	SE	BTX	90n	925m	0.0	5.0	.80	2.0Δ	9.6m	.50	5	C	PROM	B413	DL24cb
91	RC82S140N	512	8	SE	BTX	90n	925m	0.0	5.0	.80	2.0Δ	9.6m	.50	5	C	PROM	B413	DL24ar
92	RC82S141F	512	8	SE	BTX	90n	925m	0.0	5.0	.80	2.0§	9.6m	.50	5	C	PROM	B413	DL24cb
93	RC82S141N	512	8	SE	BTX	90n	925m	0.0	5.0	.80	2.0§	9.6m	.50	5	C	PROM	B413	DL24ar
94	S82S140N	512	8	SE	BTX	90n	925m	0.0	5.0	.80	2.0Δ	9.6m	.50	5	C	PROM	B413	DL24ar
95	uPB405DE	512	8	SE	BTX	100n	800m	0.0	5.0	.80	2.0Δ	16m	.45	0	6	PROM	B264	DL24cd
96	uPB425DE	512	8	SE	BTX	100n	800m	0.0	5.0	.80	2.0§	16m	.45	0	6	PROM	B264	DL24cd
97	HM6641-9	512	8	SE	MCG	150n	50m	0.0	5.0	.80	3.0§			4	8	PROM		
98	IM6604AIDG	512	8	SE	MCX	150n	1.3m	0.0	11	.80	3.0	2.0m	.45	4	8	PROM	B374b	ML297
99	IM6604AIJG	512	8	SE	MCX	150n	1.3m	0.0	11	.80	3.0	2.0m	.45	4	8	PROM	B374b	ML267
100	IM6604IDG	512	8	SE	MCX	280n	1.3m	0.0	11	.80	3.0	2.0m	.45	4	8	PROM	B374b	ML297
101	IM6604IJG	512	8	SE	MCX	280n	1.3m	0.0	11	.80	3.0	2.0m	.45	4	8	PROM	B374b	ML267
102	2704I	512	8	SE	MNG	450n	1.5 ∅	5.0	12	.65	3.0§	1.6m	.45	0	7	EAROM	B163b	DL24dk
103	B2704	512	8	SE	MNG	450n	800m	5.0	12	.65	3.0§	1.6m	.40	2	8	EPROM	B296b	
104	C2704	512	8	SE	MNG	450n	800m	5.0	12	.65	3.0§	1.6m	.45	2	8	Erasable PR	B163c	DL24ed
105	EA2704	512	8	SE	MNG	450n	800m	5.0	12	.65	3.0§	1.6m	.45	0	7	Erasable PROM	B230	DL24di
106	EA2704DC	512	8	SE	MNG	450n	630m	5.0	12	.80	2.0§	1.6m	.45	0	7	EPROM	B256	DL24di
107	M2704D1	512	8	SE	MNG	450n	800m	5.0	12	.65	3.0§	1.6m	.45	0	7	EPROM	B296b	DL24dn
108	EA2704DL	512	8	SE	MNG	500n	630m	5.0	12	.80	2.0§	1.6m	.45	5	9	EPROM	B256	DL24di
109	EA2704DM	512	8	SE	MNG	550n	630m	5.0	12	.80	2.0§	1.6m	.45	5	C	EPROM	B256	DL24di
110	S5204A	512	8	SE	MPG	750n	250m	0.0	5.0	.80	2.5§	1.6m	.40	0	7	ROM	B255a	DL∅

SYMBOLS AND CODES EXPLAINED IN INTERPRETER

3. READ ONLY MEMORIES (ROMS)

IN ORDER OF (1)No.WDS(2)No.BITS/WD(3)OP.MODE PRG.CODE(4)STRUCT.(5)MAX ACC.TIME(6)TYPE No.

LINE No.	6 TYPE NUMBER	ORGANIZATION 1 NO. WORDS	2 BITS PER WORD	3 OP MODE PROG CODE	4 STRUC-TURE CODE	5 MAX. ACCESS TIME (S)	MAX. POWER DISS. (W)	POWER SUPPLY SPAN NEG. (V)	POS. (V)	INPUT LOGIC LEVELS MAX. '0' (V)	MIN. '1' (V)	MIN.OUTPUT SINK CURRENT (A)	@ OUT (V)	OPER TEMP RNGE CODE -	+	GENERAL DESCRIPTION	DRAWINGS FUNCTIONAL EQUIVALENT NUMBER	OUTLINE
1	S5204A-3L	512	8	SE	MPG	750n	750m	12	5.0		§					Erasable PROM	B172	ML34f
2	MM5204D	512	8	SE	MPG	1.0u	480m	12	5.0	.80	3.5§	1.6m	.40	0	7	Non-Vol PROM	B172	ML184
3	MM4204D	512	8	SE	MPG	1.2u	600m	12	5.0	.80	3.5§	1.6m	.40	5	8	Non-Vol PROM	B172	DL24h
4	S6834	512	8	SE	MPX	575n	750m	12	5.0	.80	2.7§	1.6m	.40	0	7	Erasable PROM	B255	DL24bm
5	S6834-1	512	8	SE	MPX	750n	750m	12	5.0	.80	2.7§	1.6m	.40	0	7	Erasable PROM	B255	DL24bm
6	MM5244J	512	8	SE	MXG	1.0u	690m	12	5.0	.80	3.5§	1.6m	.40	0	7	PROM	B280	ML183a
7	MM4244J	512	8	SE	MXG	1.2u	860m	12	5.0	.80	3.5§	1.6m	.40	5	8	PROM	B280	ML183a
8	KM8655	512	8	SS	MPA	800n	440m	3	12							out:3state TTL		
9	MCM1141L	512	8	SS	MPX	800n	600mØ	14	14	.30	-16	10uΔ	-14	2	8		B76	DL16cf
10	TMS4305JC	512	8	SS	MXX	2.0u	250m†	12	12	-3.0	-9.0	2.0m	-2.0	2	8	Sine Pr.	B58	ML47b
11	TMS4306JC	512	8	SS	MXX	2.0u	250m†	12	12	-3.0	-9.0	2.0m	-2.0	2	8	Sine Pr.	B58	ML47b
12	2526I#2	512	9	SC	MPG	700n	730mØ	12	5.0	.60	3.4§	1.6m	.50	0	7	ROM	B370	ML174
13	2526N#2	512	9	SC	MPG	700n	730mØ	12	5.0	.60	3.4§	1.6m	.50	0	7	ROM	B370	DL24ar
14	RO3-5120	512	10	SC	MNI	500n	225m	0.0	5.0	.65	2.2§	1.6m	.45	0	7		B181b	DL24cr
15	uPD471D	512	10	SC	MNX	315n	704m♦	5.0	12	.80	3.0§	1.6m	.40	0	7		B215	DLØ
16	EA4000	512	10	SC	MPX	725n	60u%	12	12	.40%	2.4	1.6m	.40	5	8		B38	DL24bb
17	FDR146BZ	512	10	SC	MPX	725n	300m†	28	0.0	-9.0	-2.0	20mØ		5	8		E13	DL24ag
18	FDR146Z	512	10	SC	MPX	725n	300m†	28	0.0	-9.0	-2.0	20mØ		5	8		B71	DL24bb
19	MRM4A512-10	512	10	SC	MXX	330n	9.5	12	12	.40	2.5	1.6m	.40	0	7		B54	PL4
20	809-01#1	512	16	SE	BTX	80n	1.8	0.0	5.0	.40	2.4			0	6		B56	
21	MRM3B512-20	512	20	SC	MXX	330n	9.5	12	12	.40	2.5	1.6m	.40	0	7		B54	PL4
22	MRM2C512-40	512	40	SC	MXX	330n	9.5	12	12	.40	2.5	1.6m	.40	0	7		B54	PL4
23	MCS2017#2	576	7	DC	MPX	160n	200m	5.0	5.0	.80	3.5	1.6m	.40	2	8	7x9x64	C32	DLØ
24	S8564#1	576	7	SC	MPA	450n	1.0	12	5.0	.60	4.0			0	6		C47	ML13b
25	MCS2005	640	4	SC	MPN	800n	450mØ	12	5.0	.80	3.5			2	8		PN24aa	DLØ
26	MCS2014	768	3	SC	MPN	800n	450mØ	12	5.0	.80	3.5			2	8		PN24z	DLØ
27	MCS2025#2	768	10	DC	MPX	160n	300m	5.0	5.0	.80	3.5	1.6m	.40	2	8	10x12x64	C45	DLØ
28	MCS2024#2	896	9	DC	MPX	160n	300m	5.0	5.0	.80	3.5	1.6m	.40	2	8	9x7x128	C44	DLØ
29	UA2525D#4	1024	1	SC	MXX	900n	360m	10	0.0	.80♦	2.7	1.6m	.40	5	C		B9	DL24ay
30	UA2525F#4	1024	1	SC	MXX	900n	360m	10	0.0	.80♦	2.7	1.6m	.40	5	C		B9	FL3a
31	UA3525D#4	1024	1	SC	MXX	900n	360m	10	0.0	.80♦	2.7	1.6m	.40	2	7		B9	DL24ay
32	UA3525F#4	1024	1	SC	MXX	900n	360m	10	0.0	.80♦	2.7	1.6m	.40	2	7		B9	FL3a
33	SRM9225	1024	1	SE	BTD	75n	450m	0.0	5.0	0.8	2.0	30m	0.4	0	7	PROM	B212	DL16Ø
34	uPB406D-E	1024	1	SE	BTX	100n	500m†	0.0	5.0	.80	2.0Δ	16m	.45	0	7	PROM	PN18as	DL18Ø
35	uPB426D-E	1024	1	SE	BTX	100n	500m†	0.0	5.0	.80	2.0§	16m	.45	0	7	PROM	PN18as	DL18Ø
36	NC7010#2	1024	1	SE	MXN	25u	150m†	30	0.0	-12	-2.0	0.5m$	-1.0	0	7	Non-Vol EAROM		DLØ
37	MCS2010	1024	2	SC	MPN	800n	450mØ	12	5.0	.80	3.5			2	8		PN24z	DLØ
38	RO1-2048#2	1024	2	SC	MPT	750n	135m†	24	0.0	-2.0	-24	3.0m		5	8		B49	ML47
39	MM4224D#3	1024	2	SC	MPX	1.0u	480m♦	15	5.0	.80	2.4§	1.6m	.40	5	C		B9a	ML130
40	MM4225D#3	1024	2	SC	MPX	1.0u	480m♦	15	5.0	.80	2.4§	1.6m	.40	5	C		B9a	ML130
41	MM5224D#3	1024	2	SC	MPX	1.0u	480m♦	15	5.0	.80	2.4§	1.6m	.40	2	7		B9a	ML130
42	MM5225D#3	1024	2	SC	MPX	1.0u	480m♦	15	5.0	.80	2.4§	1.6m	.40	2	7		B9a	ML130
43	UA2548#3	1024	2	SC	MXX	900n	600m	20	0.0	.80♦	2.7	1.6m	.40	5	C		B9a	DL24ay
44	UA3548#3	1024	2	SC	MXX	900n	600m	20	0.0	.80♦	2.7	1.6m	.40	2	7		B9a	DL24ay
45	HRM2048#2	1024	2	SE	TAX	500n	640m♦	0.0	5.0	2.0	.80			0	7	PR Non-Vol RMM	B91	DL42a
46	EA3300#2	1024	4	DC	MPX	1.5u	90m†	13	0.0	-2.0	-9.0			0	7	fc 100kHz	B36	DL24bb
47	6250-1D	1024	4	SC	BTD	60n	875m♦	0.0	5.0	8.0	2.0Δ	16m	.50	0	7		B222	ML210a
48	6250-1F	1024	4	SC	BTD	60n	875m	0.0	5.0	.80	2.0Δ	16m	.50	0	7	ROM	PN18ax	FLØ
49	6250-1J	1024	4	SC	BTD	60n	875m♦	0.0	5.0	.80	2.0Δ	16m	.50	0	7	ROM	PN18ax	DL18q
50	6250-1N	1024	4	SC	BTD	60n	875m	0.0	5.0	.80	2.0Δ	16m	.50	0	7	ROM	PN18ax	DL18bd
51	6251-1D	1024	4	SC	BTD	60n	875m♦	0.0	5.0	8.0	2.0§	16m	.50	0	7		B222	ML210a
52	6251-1F	1024	4	SC	BTD	60n	875m	0.0	5.0	.80	2.0§	16m	.50	0	7	ROM	PN18ax	FLØ
53	6251-1J	1024	4	SC	BTD	60n	875m♦	0.0	5.0	.80	2.0§	16m	.50	0	7	ROM	PN18ax	DL18q
54	6251-1N	1024	4	SC	BTD	60n	875m	0.0	5.0	.80	2.0§	16m	.50	0	7	ROM	PN18ax	DL18bd
55	6252-1F	1024	4	SC	BTD	60n	875m	0.0	5.0	.80	2.0Δ	16m	.50	0	7	ROM	PN18ay	FLØ
56	6252-1J	1024	4	SC	BTD	60n	875m	0.0	5.0	.80	2.0Δ	16m	.50	0	7	ROM	PN18ay	DL18q
57	6252-1N	1024	4	SC	BTD	60n	875m	0.0	5.0	.80	2.0Δ	16m	.50	0	7	ROM	PN18ay	DL18bd
58	6253-1F	1024	4	SC	BTD	60n	875m	0.0	5.0	.80	2.0§	16m	.50	0	7	ROM	PN18ay	FLØ
59	6253-1J	1024	4	SC	BTD	60n	875m	0.0	5.0	.80	2.0§	16m	.50	0	7	ROM	PN18ay	DL18q
60	6253-1N	1024	4	SC	BTD	60n	875m	0.0	5.0	.80	2.0§	16m	.50	0	7	ROM	PN18ay	DL18bd
61	RC82S136F	1024	4	SC	BTD	60n	13m†	0.0	5.5	.80	2.0Δ			0	7	PROM	B212	DL18h
62	C3304#2	1024	4	SC	BTD	65n	918m	0.0	5.0	.85	2.0	15m	.45	0	7		PN24ac	DL24bk
63	5250-1D	1024	4	SC	BTD	75n	875m♦	0.0	5.0	.80	2.0Δ	12m	.50	5	C		B222	ML210a
64	5250-1F	1024	4	SC	BTD	75n	875m	0.0	5.0	.80	2.0Δ	12m	.50	5	C	ROM	PN18ax	FLØ
65	5250-1J	1024	4	SC	BTD	75n	875m♦	0.0	5.0	.80	2.0Δ	12m	.50	5	C	ROM	PN18ax	DL18q
66	5250-1N	1024	4	SC	BTD	75n	875m	0.0	5.0	.80	2.0Δ	12m	.50	5	C	ROM	PN18ax	DL18bd
67	5251-1D	1024	4	SC	BTD	75n	875m♦	0.0	5.0	.80	2.0§	12m	.50	5	C		B222	ML210a
68	5251-1F	1024	4	SC	BTD	75n	875m	0.0	5.0	.80	2.0§	12m	.50	5	C	ROM	PN18ax	FLØ
69	5251-1J	1024	4	SC	BTD	75n	875m♦	0.0	5.0	.80	2.0§	12m	.50	5	C	ROM	PN18ax	DL18q
70	5251-1N	1024	4	SC	BTD	75n	875m	0.0	5.0	.80	2.0§	12m	.50	5	C	ROM	PN18ax	DL18bd
71	5252-1F	1024	4	SC	BTD	75n	875m	0.0	5.0	.80	2.0Δ	12m	.50	5	C	ROM	PN18ay	FLØ
72	5252-1J	1024	4	SC	BTD	75n	875m	0.0	5.0	.80	2.0Δ	12m	.50	5	C	ROM	PN18ay	DL18q
73	5252-1N	1024	4	SC	BTD	75n	875m	0.0	5.0	.80	2.0Δ	12m	.50	5	C	ROM	PN18ay	DL18bd
74	5253-1F	1024	4	SC	BTD	75n	875m	0.0	5.0	.80	2.0§	12m	.50	5	C	ROM	PN18ay	FLØ
75	5253-1J	1024	4	SC	BTD	75n	875m	0.0	5.0	.80	2.0§	12m	.50	5	C	ROM	PN18ay	DL18q
76	5253-1N	1024	4	SC	BTD	75n	875m	0.0	5.0	.80	2.0§	12m	.50	5	C	ROM	PN18ay	DL18bd
77	S8228I	1024	4	SC	BTX	90n	750m	0.0	5.0	.85	2.0	11m	.45	5	C		B29	
78	N82S137BR	1024	4	SC	BXX	35n			7.0	0.85	2.0§	16m	0.45	0	7	PROM	B212	FL18Ø
79	SFF70612KM#2	1024	4	SC	MPA	7.0u	460mØ	12	5.0	.80	3.0	2.0m†	1.0	5	C		B96	DL24w
80	SFF70612KT#2	1024	4	SC	MPA	7.0u	460mØ	12	5.0	.80	3.0	2.0m†	1.0	2	8		B96	DL24w
81	MK2500P#2	1024	4	SC	MPI	700n	476m♦	12	5.0	.80	2.4	1.6m	.40	0	7		B73	ML21
82	MK2600P#2	1024	4	SC	MPI	700n	476m♦	12	5.0	.80	2.4	1.6m	.40	0	7		B99	ML21
83	S5232-1W#2	1024	4	SC	MPI	1.0u	500m	12	5.0								B73	DL24bv
84	S5232-2L#2	1024	4	SC	MPI	1.0u	500m	12	5.0								B73	ML72e
85	MCM1140L#2	1024	4	SC	MPX	800n	600mØ	14	14	.30	-16	10uΔ	-14	2	8		B76a	DL16cf
86	MM4232J#2	1024	4	SC	MPX	1.0u	629mØ	12	5.0	1.0	3.0§	1.6m	.40	5	C		B96	DL24cc
87	MM5232J#2	1024	4	SC	MPX	1.0u	629mØ	12	5.0	1.0	3.0§	1.6m	.40	0	7		B96	DL24cc
88	MM5232N#2	1024	4	SC	MPX	1.0u	629mØ	12	5.0	1.0	3.0§	1.6m	.40	0	7		B96	DL24au
89	FDR131Z#2	1024	4	SC	MPX	1.5u	90m†	14	0.0	-9.0	-2.0			0	7	ROM	B36	DL24bb
90	GER542W1#3	1024	4	SC	MXR	500n	350m†	12	5.0	1.0Ø	4.0						B8a	ML30
91	UA2596D4#2	1024	4	SC	MXX	900n	600m	20	0.0	.80♦	2.7	1.6m	.40	5	C		B9c	DL24ay
92	UA2596D8#2	1024	4	SC	MXX	900n	600m	20	0.0	.80♦	2.7	1.6m	.40	5	C		B9c	DL28b
93	UA3596D4#2	1024	4	SC	MXX	900n	600m	20	0.0	.80♦	2.7	1.6m	.40	2	7		B9c	DL24ay
94	UA3596D8#2	1024	4	SC	MXX	900n	600m	20	0.0	.80♦	2.7	1.6m	.40	2	7		B9c	DL28b
95	TMS4300JC#2	1024	4	SC	MXX	2.0u	250m†	12	12	-3.0	-9.0	2.0m	-2.0	2	8		B58a	ML47b
96	TMS4400JC#1	1024	4	SC	MXX	2.0u	250m†	24	0.0	-3.0	-8.0	12m	.40	2	8		B62a	ML47d
97	TMS4400NC#1	1024	4	SC	MXX	2.0u	250m†	24	0.0	-3.0	-8.0	12m	.40	2	8		B62a	DL24bu
98	5350-1D	1024	4	SE		75n	875m♦	0.0	5.0	.80	2.0Δ	12m	.50	5	C	Field Prog ROM	B222	ML210a
99	5351-1D	1024	4	SE		75n	875m♦	0.0	5.0	.80	2.0§	12m	.50	5	C	Field Prog ROM	B222	ML210a
100	5352-1D	1024	4	SE		75n	875m♦	0.0	5.0	.80	2.0Δ	12m	.50	5	C	Field Prog ROM	B222a	ML210c
101	5353-1D	1024	4	SE		75n	875m♦	0.0	5.0	.80	2.0§	12m	.50	5	C	Field Prog ROM	B222a	ML210c
102	53RA441F	1024	4	SE	BTD	30n	900m	0.0	5.0	.80	2.0	16m	.50	5	C	PROM;Reg	B330	FLØ
103	53RS441F	1024	4	SE	BTD	30n	900m	0.0	5.0	.80	2.0	16m	.50	5	C	PROM;Reg	B334	DLØ
104	53RS441J	1024	4	SE	BTD	30n	900m	0.0	5.0	.80	2.0	16m	.50	5	C	PROM;Reg	B334	DLØ
105	53RS441N	1024	4	SE	BTD	30n	900m	0.0	5.0	.80	2.0	16m	.50	5	C	PROM;Reg	B334	DLØ
106	63RA441F	1024	4	SE	BTD	30n	900m	0.0	5.0	.80	2.0	20m	.50	0	7	PROM;Reg	B330	FLØ
107	63RS441F	1024	4	SE	BTD	30n	900m	0.0	5.0	.80	2.0	24m	.50	0	7	PROM;Reg	B334	DLØ
108	63RS441J	1024	4	SE	BTD	30n	900m	0.0	5.0	.80	2.0	24m	.50	0	7	PROM;Reg	B334	DLØ

SYMBOLS AND CODES EXPLAINED IN INTERPRETER

3. READ ONLY MEMORIES (ROMS)

IN ORDER OF (1)No.WDS(2)No.BITS/WD(3)OP.MODE PRG.CODE(4)STRUCT.(5)MAX ACC.TIME(6)TYPE No.

LINE No.	6 TYPE NUMBER	ORGANIZATION 1 NO. WORDS	2 BITS PER WORD	3 OP MODE PROG CODE	4 STRUC -TURE CODE	5 MAX. ACCESS TIME (S)	MAX. POWER DISS. (W)	POWER SUPPLY SPAN NEG. (V)	POS. (V)	INPUT LOGIC LEVELS MAX. '0' (V)	MIN. '1' (V)	MIN.OUTPUT SINK CURRENT (A)	@ OUT (V)	OPER TEMP RNGE CODE -	+	GENERAL DESCRIPTION	DRAWINGS FUNCTIONAL EQUIVALENT NUMBER	OUTLINE
1	63RS441N	1024	4	SE	BTD	30n	900m	0.0	5.0	.80	2.0	24m	.50	0	7	PROM;Reg	B334	DLØ
2	53PS440F	1024	4	SE	BTD	33n	525m†	0.0	5.0	.80	2.0Δ	16m	.50	5	C	PROM;Pwr Sw	PN18ay	FLØ
3	53PS440J	1024	4	SE	BTD	33n	525m†	0.0	5.0	.80	2.0Δ	16m	.50	5	C	PROM;Pwr Sw	PN18ay	DL18q
4	53PS440N	1024	4	SE	BTD	33n	525m†	0.0	5.0	.80	2.0Δ	16m	.50	5	C	PROM;Pwr Sw	PN18ay	DL18bd
5	53PS441F	1024	4	SE	BTD	33n	525m†	0.0	5.0	.80	2.0§	16m	.50	5	C	PROM;Pwr Sw	PN18ay	FLØ
6	53PS441J	1024	4	SE	BTD	33n	525m†	0.0	5.0	.80	2.0§	16m	.50	5	C	PROM;Pwr Sw	PN18ay	DL18q
7	53PS441N	1024	4	SE	BTD	33n	525m†	0.0	5.0	.80	2.0§	16m	.50	5	C	PROM;Pwr Sw	PN18ay	DL18bd
8	63PS440F	1024	4	SE	BTD	33n	525m†	0.0	5.0	.80	2.0Δ	16m	.45	0	7	PROM;Pwr Sw	PN18ay	FLØ
9	63PS440J	1024	4	SE	BTD	33n	525m†	0.0	5.0	.80	2.0Δ	16m	.45	0	7	PROM;Pwr Sw	PN18ay	DL18q
10	63PS440N	1024	4	SE	BTD	33n	525m†	0.0	5.0	.80	2.0Δ	16m	.45	0	7	PROM;Pwr Sw	PN18ay	DL18bd
11	63PS441F	1024	4	SE	BTD	33n	525m†	0.0	5.0	.80	2.0§	16m	.45	0	7	PROM;Pwr Sw	PN18ay	FLØ
12	63PS441J	1024	4	SE	BTD	33n	525m†	0.0	5.0	.80	2.0§	16m	.45	0	7	PROM;Pwr Sw	PN18ay	DL18q
13	63PS441N	1024	4	SE	BTD	33n	525m†	0.0	5.0	.80	2.0§	16m	.45	0	7	PROM;Pwr Sw	PN18ay	DL18bd
14	MCM7642L	1024	4	SE	BTD	40n		0.0	5.0							Open Coll		
15	MCM7642P	1024	4	SE	BTD	40n		0.0	5.0							Open Coll		
16	MCM7643L	1024	4	SE	BTD	40n		0.0	5.0							Tri State		
17	MCM7643P	1024	4	SE	BTD	40n		0.0	5.0							Tri State		
18	SN54S476J	1024	4	SE	BTD	40n	475m	0.0	5.0	.80	2.0§	16m	.50	5	C	PROM	PN18as	DL18b
19	SN54S477J	1024	4	SE	BTD	40n	475m	0.0	5.0	.80	2.0Δ	16m	.50	5	C	PROM	PN18as	DL18b
20	63S440F	1024	4	SE	BTD	50n	850m	0.0	5.0	.80	2.0Δ	16m	.45	0	7	PROM	PN18ay	FLØ
21	63S440J	1024	4	SE	BTD	50n	850m	0.0	5.0	.80	2.0Δ	16m	.45	0	7	PROM	PN18ay	DL18q
22	63S440N	1024	4	SE	BTD	50n	850m	0.0	5.0	.80	2.0Δ	16m	.45	0	7	PROM	PN18ay	DL18bd
23	63S441F	1024	4	SE	BTD	50n	850m	0.0	5.0	.80	2.0§	16m	.45	0	7	PROM	PN18ay	FLØ
24	63S441J	1024	4	SE	BTD	50n	850m	0.0	5.0	.80	2.0§	16m	.45	0	7	PROM	PN18ay	DL18q
25	63S441N	1024	4	SE	BTD	50n	850m	0.0	5.0	.80	2.0§	16m	.45	0	7	PROM	PN18ay	DL18bd
26	D3605-1	1024	4	SE	BTD	50n	750m♦	0.0	5.0	.85	2.0Δ	15m	.45	6	C		B214	DL18av
27	D3625-1	1024	4	SE	BTD	50n	750m♦	0.0	5.0	.85	2.0§	15m	.45	6	C		B214	DL18av
28	HM1-7645-5	1024	4	SE	BTD	50n	700m	0.0	5.0	.80	2.0§	16m	.50	0	7	PROM	B387	ML308
29	HM1-7645P5	1024	4	SE	BTD	50n	700m	0.0	5.0	.80	2.0§	16m	.50	0	7	PROM,Pwr Sw	B387a	ML308
30	HM3-7645-5	1024	4	SE	BTD	50n	700m	0.0	5.0	.80	2.0§	16m	.50	0	7	PROM	B387	
31	HM3-7645P5	1024	4	SE	BTD	50n	700m	0.0	5.0	.80	2.0§	16m	.50	0	7	PROM,Pwr Sw	B387a	
32	HM9-7642A5	1024	4	SE	BTD	50n	700m	0.0	5.0	.80	2.0Δ	16m	.45	0	7	PROM	B384a	FL52
33	HM9-7642P5	1024	4	SE	BTD	50n	700m	0.0	5.0	.80	2.0Δ	16m	.45	0	7	PROM,Pwr Sw	B384	FL52
34	HM9-7643A5	1024	4	SE	BTD	50n	700m	0.0	5.0	.80	2.0§	16m	.45	0	7	PROM	B384a	FL52
35	HM9-7643P5	1024	4	SE	BTD	50n	700m	0.0	5.0	.80	2.0§	16m	.45	0	7	PROM,Pwr Sw	B384	FL52
36	HM9-7644A5	1024	4	SE	BTD	50n	700m	0.0	5.0	.80	2.0	16m	.45	0	7	PROM	B386	FL54
37	HM9-7645-5	1024	4	SE	BTD	50n	700m	0.0	5.0	.80	2.0§	16m	.50	0	7	PROM	B387	FL56
38	HM9-7645P5	1024	4	SE	BTD	50n	700m	0.0	5.0	.80	2.0§	16m	.50	0	7	PROM,Pwr Sw	B387a	FL56
39	53S440F	1024	4	SE	BTD	60n	850m	0.0	5.0	.80	2.0Δ	16m	.50	5	C	PROM	PN18ay	FLØ
40	53S440J	1024	4	SE	BTD	60n	850m	0.0	5.0	.80	2.0Δ	16m	.50	5	C	PROM	PN18ay	DL18q
41	53S440N	1024	4	SE	BTD	60n	850m	0.0	5.0	.80	2.0Δ	16m	.50	5	C	PROM	PN18ay	DL18bd
42	53S441F	1024	4	SE	BTD	60n	850m	0.0	5.0	.80	2.0§	16m	.50	5	C	PROM	PN18ay	FLØ
43	53S441J	1024	4	SE	BTD	60n	850m	0.0	5.0	.80	2.0§	16m	.50	5	C	PROM	PN18ay	DL18q
44	53S441N	1024	4	SE	BTD	60n	850m	0.0	5.0	.80	2.0§	16m	.50	5	C	PROM	PN18ay	DL18bd
45	6350-1N	1024	4	SE	BTD	60n	875m	0.0	5.0	.80	2.0Δ	16m	.50	0	7	PROM	B342a	DL18bd
46	6351-1J	1024	4	SE	BTD	60n	875m	0.0	5.0	.80	2.0§	16m	.50	0	7	PROM	B342a	DL18q
47	6351-1N	1024	4	SE	BTD	60n	875m	0.0	5.0	.80	2.0§	16m	.50	0	7	PROM	B342a	DL18bd
48	6352-1J	1024	4	SE	BTD	60n	875m	0.0	5.0	.80	2.0Δ	16m	.50	0	7	PROM	B319a	DL18q
49	6352-1N	1024	4	SE	BTD	60n	875m	0.0	5.0	.80	2.0Δ	16m	.50	0	7	PROM	B319a	DL18bd
50	6353-1J	1024	4	SE	BTD	60n	875m	0.0	5.0	.80	2.0§	16m	.50	0	7	PROM	B319a	DL18q
51	6353-1N	1024	4	SE	BTD	60n	875m	0.0	5.0	.80	2.0§	16m	.50	0	7	PROM	B319a	DL18bd
52	29640DC	1024	4	SE	BTD	60n	775mØ	0.0	5.0	.80	2.0Δ	16m	.50	0	7	PROM	B396	DLØ
53	29641DC	1024	4	SE	BTD	60n	775mØ	0.0	5.0	.80	2.0§	16m	.50	0	7	PROM	B396	DLØ
54	D3605-2	1024	4	SE	BTD	60n	750m♦	0.0	5.0	.85	2.0Δ	15m	.45	0	7	PROM	B214	ML231
55	D3625-2	1024	4	SE	BTD	60n	750m♦	0.0	5.0	.85	2.0§	15m	.45	0	7	PROM	B214	ML231
56	HM3-7644A2	1024	4	SE	BTD	60n	700m	0.0	5.0	.80	2.0	16m	.45	5	C	PROM	B386	DL16dm
57	HM9-7644-5	1024	4	SE	BTD	60n	700m	0.0	5.0	.80	2.0	16m	.45	0	7	PROM	B382a	FL54
58	RC82S137F	1024	4	SE	BTD	60n	13m†	0.0	5.5	.80	2.0§			0	7	PROM	B212	DL18h
59	63LS440F	1024	4	SE	BTD	65n	425m	0.0	5.0	.80	2.0Δ	16m	.45	0	7	PROM	PN18ay	FLØ
60	63LS440J	1024	4	SE	BTD	65n	425m	0.0	5.0	.80	2.0Δ	16m	.45	0	7	PROM	PN18ay	DL18q
61	63LS440N	1024	4	SE	BTD	65n	425m	0.0	5.0	.80	2.0Δ	16m	.45	0	7	PROM	PN18ay	DL18bd
62	63LS441F	1024	4	SE	BTD	65n	425m	0.0	5.0	.80	2.0§	16m	.45	0	7	PROM	PN18ay	FLØ
63	63LS441J	1024	4	SE	BTD	65n	425m	0.0	5.0	.80	2.0§	16m	.45	0	7	PROM	PN18ay	DL18q
64	63LS441N	1024	4	SE	BTD	65n	425m	0.0	5.0	.80	2.0§	16m	.45	0	7	PROM	PN18ay	DL18bd
65	29642DC	1024	4	SE	BTD	65n	775mØ	0.0	5.0	.80	2.0Δ	16m	.50	0	7	PROM;Pwr Sw	B396	DLØ
66	29643DC	1024	4	SE	BTD	65n	775mØ	0.0	5.0	.80	2.0§	16m	.50	0	7	PROM;Pwr Sw	B396	DLØ
67	D3605	1024	4	SE	BTD	70n	750m♦	0.0	5.0	.85	2.0Δ	15m	.45	0	7	PROM	B214	ML231
68	D3625	1024	4	SE	BTD	70n	750m♦	0.0	5.0	.85	2.0§	15m	.45	0	7	PROM	B214	ML231
69	HM1-7645-2	1024	4	SE	BTD	70n	700m	0.0	5.0	.80	2.0§	16m	.50	5	C	PROM	B387	ML308
70	HM1-7645P2	1024	4	SE	BTD	70n	700m	0.0	5.0	.80	2.0§	16m	.50	5	C	PROM,Pwr Sw	B387a	ML308
71	HM3-7642A2	1024	4	SE	BTD	70n	700m	0.0	5.0	.80	2.0Δ	16m	.45	5	C	PROM	B384a	DL18ar
72	HM3-7642P2	1024	4	SE	BTD	70n	700m	0.0	5.0	.80	2.0Δ	16m	.45	5	C	PROM,Pwr Sw	B384	DL18ar
73	HM3-7643A2	1024	4	SE	BTD	70n	700m	0.0	5.0	.80	2.0§	16m	.45	5	C	PROM	B384a	DL18ar
74	HM3-7643P2	1024	4	SE	BTD	70n	700m	0.0	5.0	.80	2.0§	16m	.45	5	C	PROM,Pwr Sw	B384	DL18ar
75	HM3-7645-2	1024	4	SE	BTD	70n	700m	0.0	5.0	.80	2.0§	16m	.50	5	C	PROM	B387	
76	HM3-7645P2	1024	4	SE	BTD	70n	700m	0.0	5.0	.80	2.0§	16m	.50	5	C	PROM,Pwr Sw	B387a	
77	HM9-7645-2	1024	4	SE	BTD	70n	700m	0.0	5.0	.80	2.0§	16m	.50	5	C	PROM	B387	FL56
78	HM9-7645P2	1024	4	SE	BTD	70n	700m	0.0	5.0	.80	2.0§	16m	.50	5	C	PROM,Pwr Sw	B387a	FL56
79	MCM7642D	1024	4	SE	BTD	70n	700m	0.0	5.0	.80	2.0Δ	16m	.45	0	7	PROM	PN18as	DL18an
80	MCM7642DC	1024	4	SE	BTD	70n	700m	0.0	5.0	.80	2.0Δ	16m	.45	0	7	PROM	PN18as	DL18an
81	MCM7643D	1024	4	SE	BTD	70n	700m	0.0	5.0	.80	2.0§	16m	.45	0	7	PROM	PN18as	DL18an
82	53LS440F	1024	4	SE	BTD	75n	425m	0.0	5.0	.80	2.0Δ	12m	.50	5	C	PROM	PN18ay	FLØ
83	53LS440J	1024	4	SE	BTD	75n	425m	0.0	5.0	.80	2.0Δ	12m	.50	5	C	PROM	PN18ay	DL18q
84	53LS440N	1024	4	SE	BTD	75n	425m	0.0	5.0	.80	2.0Δ	12m	.50	5	C	PROM	PN18ay	DL18bd
85	53LS441F	1024	4	SE	BTD	75n	425m	0.0	5.0	.80	2.0§	12m	.50	5	C	PROM	PN18ay	FLØ
86	53LS441J	1024	4	SE	BTD	75n	425m	0.0	5.0	.80	2.0§	12m	.50	5	C	PROM	PN18ay	DL18q
87	53LS441N	1024	4	SE	BTD	75n	425m	0.0	5.0	.80	2.0§	12m	.50	5	C	PROM	PN18ay	DL18bd
88	5350-1N	1024	4	SE	BTD	75n	875m	0.0	5.0	.80	2.0Δ	12m	.50	5	C	PROM	B342a	DL18bd
89	5351-1N	1024	4	SE	BTD	75n	875m	0.0	5.0	.80	2.0§	12m	.50	5	C	PROM	B342a	DL18bd
90	5352-1N	1024	4	SE	BTD	75n	875m	0.0	5.0	.80	2.0Δ	12m	.50	5	C	PROM	B319a	DL18bd
91	5353-1N	1024	4	SE	BTD	75n	875m	0.0	5.0	.80	2.0§	12m	.50	5	C	PROM	B319a	DL18bd
92	29640DM	1024	4	SE	BTD	75n	775mØ	0.0	5.0	.80	2.0Δ	16m	.50	5	C	PROM	B396	DLØ
93	29641DM	1024	4	SE	BTD	75n	775mØ	0.0	5.0	.80	2.0§	16m	.50	5	C	PROM	B396	DLØ
94	29642DM	1024	4	SE	BTD	80n	775mØ	0.0	5.0	.80	2.0Δ	16m	.50	5	C	PROM;Pwr Sw	B396	DLØ
95	29643DM	1024	4	SE	BTD	80n	775mØ	0.0	5.0	.80	2.0§	16m	.50	5	C	PROM;Pwr Sw	B396	DLØ
96	S82S137N	1024	4	SE	BTD	80n	130u%	0.0	5.0	.80	2.0§	16m	.50	5	C	Bipolar PROM	B212	DL18cb
97	HM3-7644-2	1024	4	SE	BTD	85n	700m	0.0	5.0	.80	2.0	16m	.45	5	C	PROM	B382a	DL16dm
98	MCM7642DM	1024	4	SE	BTD	85n	700m	0.0	5.0	.80	2.0Δ	16m	.45	5	C	PROM	PN18as	DL18an
99	MCM7643DM	1024	4	SE	BTD	85n	700m	0.0	5.0	.80	2.0§	16m	.45	5	C	PROM	PN18as	DL18an
100	MB7054	1024	4	SE	BTX	70n	683m	0.0	5.0	.80	2.0§	16m	.45	0	7	PROM	B228	ML3c
101	MB7054C	1024	4	SE	BTX	70n		0.0	5.0	.80	2.0§	16m	.45	0	7	PROM	B212	DL18bo
102	MB7059	1024	4	SE	BTX	70n	683m	0.0	5.0	.80	2.0Δ	16m	.45	0	7	PROM	B228	ML3c
103	MB7059C	1024	4	SE	BTX	70n		0.0	5.0	.80	2.0Δ	16m	.45	0	7	PROM	B212	DL18bo
104	uPB406DE	1024	4	SE	BTX	100n	650m	0.0	5.0	.80	2.0Δ	16m	.45	0	6	PROM	PN18as	ML194a
105	uPB426DE	1024	4	SE	BTX	100n	650m	0.0	5.0	.80	2.0§	16m	.45	0	6	PROM	PN18as	ML194a
106	C3605A-1	1024	4	SE	BXX	50n	700m	0.0	5.0	.85	2.0Δ	15m	.45	0	7	PROM	B214	DL18am
107	C3625A-1	1024	4	SE	BXX	50n	700m	0.0	5.0	.85	2.0§	15m	.45	0	7	PROM	B214	DL18am
108	D3605A-1	1024	4	SE	BXX	50n	700m	0.0	5.0	.85	2.0Δ	15m	.45	0	7	PROM	B214	DL18bh
109	D3625A-1	1024	4	SE	BXX	50n	700m	0.0	5.0	.85	2.0§	15m	.45	0	7	PROM	B214	DL18bh
110	C3605A	1024	4	SE	BXX	60n	700m	0.0	5.0	.85	2.0Δ	15m	.45	0	7	PROM	B214	DL18am

SYMBOLS AND CODES EXPLAINED IN INTERPRETER

3. READ ONLY MEMORIES (ROMS)

IN ORDER OF (1)No.WDS(2)No.BITS/WD(3)OP.MODE PRG.CODE(4)STRUCT.(5)MAX ACC.TIME(6)TYPE No.

LINE No.	6 TYPE NUMBER	ORGANIZATION 1 NO. WORDS	2 BITS PER WORD	3 OP MODE PROG CODE	4 STRUC-TURE CODE	5 MAX. ACCESS TIME (S)	MAX. POWER DISS. (W)	POWER SUPPLY SPAN NEG. (V)	POS. (V)	INPUT LOGIC LEVELS MAX. '0' (V)	MIN. '1' (V)	MIN.OUTPUT SINK CURRENT (A)	@ OUT (V)	OPER TEMP RNGE CODE -	+	GENERAL DESCRIPTION	DRAWINGS FUNCTIONAL EQUIVALENT NUMBER	OUTLINE
1	C3625A	1024	4	SE	BXX	60n	700m	0.0	5.0	.85	2.0§	15m	.45	0	7	PROM	B214	DL18am
2	D3605A	1024	4	SE	BXX	60n	700m	0.0	5.0	.85	2.0Δ	15m	.45	0	7	PROM	B214	DL18bh
3	D3625A	1024	4	SE	BXX	60n	700m	0.0	5.0	.85	2.0§	15m	.45	0	7	PROM	B214	DL18bh
4	IM6603AIDG	1024	4	SE	MCX	150n	1.3m	0.0	11	.80	3.0	2.0m	.45	4	8	PROM	B374a	ML297
5	IM6603AIJG	1024	4	SE	MCX	150n	1.3m	0.0	11	.80	3.0	2.0m	.45	4	8	PROM	B374a	ML267
6	IM6603IDG	1024	4	SE	MCX	280n	1.3m	0.0	11	.80	3.0	2.0m	.45	4	8	PROM	B374a	ML297
7	IM6603IJG	1024	4	SE	MCX	280n	1.3m	0.0	11	.80	3.0	2.0m	.45	4	8	PROM	B374a	ML267
8	M5G2401S	1024	4	SE	MPA	2.0u	80m†	14	5.0	0.0	3.5	3.2m	.40	0	7	EAROM	B238	DL24dx
9	ER3401	1024	4	SE	MPN	950n	535m	30	5.0	.80	3.5§	2.0m	.40	0	7		B240	DL22y
10	ER2401	1024	4	SE	MPN	2.0u	700m	23	5.0	.60	3.5§	3.2m		0	7	EAROM	B238	DL24cr
11	UC6596S	1024	4	SE	MPX	5.0u	50m♦	15	5.0	.60	3.0	1.6m	.40	6	F		B33	
12	UC7596S	1024	4	SE	MPX	5.0u	50m♦	15	5.0	.60	3.0	1.6m	.40	6	F		B33	
13	ER2401A	1024	4	SE	MXX	2.0u	700m	23	5.0	.60	3.5	3.2m	.80	0	7	EAROM	B238a	DL24cr
14	uPD472D	1024	5	SC	MNX	315n	704m♦	5.0	12	.80	3.0§	1.6m	.40	0	7		B216	DLØ
15	M58730-XXXP	1024	8			850n	760m	5.0	12	.80	3.3	1.9m	.45	0	7			
16	RC82S280I	1024	8		BTD	100n	750m	0.0	5.0	.80	2.0Δ	9.6m$	.50	5	C		B131	DL24dk
17	RC82S281I	1024	8		BTD	100n	750m	0.0	5.0	.80	2.0Δ	9.6m$	.50	5	C		B131	DL24dk
18	TMS4700JL	1024	8		MNG	450n	310m†	5.0	12	.80	3.3	2.0m	.45	0	7		B194	DL24de
19	TMS4700NL	1024	8		MNG	450n	310m†	5.0	12	.80	3.3	2.0m	.45	0	7		B194	DL24bw
20	MCS2023	1024	8	DC	MPX	160n	300m	5.0	5.0	.80	3.5	1.6m	.40	2	8	8x1024	B100	DLØ
21	AM27S180DMB	1024	8	E	BTD	80n		0.0	5.0	0.8	2.0Δ	16m	0.5	5	C	PROM	74LS479	DL24z
22	M5L2708K	1024	8	S	MNG	450n	600m†	5.0	12					0	7	EPROM;Fld Prg		DLØ
23	M5L2708K65	1024	8	S	MNG	650n	600m†	5.0	12					0	7	EPROM;Fld Prg		DLØ
24	M58730-001S	1024	8	S	MNG	850n	250m†	5.0	12					0	7			DLØ
25	MCM7680CDC	1024	8	S	MTD	70n	4.5 Ø	0.0	5.0	0.8	2.0Δ	100mØ		0	6	PROM		DL24cq
26	MCM7680CDM	1024	8	S	MTD	70n	4.5 Ø	0.0	5.0	0.8	2.0Δ	100mØ		5	C	PROM		DL24cq
27	MCM7681CDC	1024	8	S	MTD	85n	4.5 Ø	0.0	5.0	0.8	2.0§	100mØ		0	6	PROM		DL24cq
28	MCM7681CDM	1024	8	S	MTD	85n	4.5 Ø	0.0	5.0	0.8	2.0§	100mØ		5	C	PROM		DL24cq
29	AM27S80DC	1024	8	SC		90n	600n	0.0	5.0	.80	2.0Δ	16m	.45	0	7		B450	DLØ
30	AM27S80DM	1024	8	SC		90n	600m	0.0	5.0	.80	2.0Δ	16m	.45	5	C		B450	DLØ
31	AM27S80XX	1024	8	SC		90n	600m	0.0	5.0	.80	2.0Δ	16m	.45	5	C		B450	DLØ
32	C2608	1024	8	SC		450n	1.0	5.0	12	.65	3.0§	1.6m	.45	0	7		B416	DL24ed
33	D2608	1024	8	SC		450n	1.0	5.0	12	.65	3.0§	1.6m	.45	0	7		B416	DL24cs
34	P2608	1024	8	SC		450n	1.0	5.0	12	.65	3.0§	1.6m	.45	0	7		B416	DL24ct
35	93464DC	1024	8	SC	BTD	45n	750m♦	0.0	5.0	.80	2.0§	16m	.45	0	7		B162	DL24bg
36	93464FC	1024	8	SC	BTD	45n	750m♦	0.0	5.0	.80	2.0§	16m	.45	0	7		B162	FL3c
37	93464PC	1024	8	SC	BTD	45n	750m♦	0.0	5.0	.80	2.0§	16m	.45	0	7		B162	DL24ci
38	6280-2N	1024	8	SC	BTD	55n	850m	0.0	5.0	.80	2.0Δ	10m	.50	0	7	ROM	PN24ag	DL24co
39	6281-2N	1024	8	SC	BTD	55n	900m	0.0	5.0	.80	2.0§	10m	.50	0	7	ROM	PN24ag	DL24co
40	6286-2J	1024	8	SC	BTD	55n	850m	0.0	5.0	.80	2.0Δ	10m	.50	0	7	ROM	PN22aw	ML284
41	6286-2N	1024	8	SC	BTD	55n	850m	0.0	5.0	.80	2.0Δ	10m	.50	0	7	ROM	PN22aw	DLØ
42	6287-2J	1024	8	SC	BTD	55n	900m	0.0	5.0	.80	2.0§	10m	.50	0	7	ROM	PN22aw	ML284
43	6287-2N	1024	8	SC	BTD	55n	900m	0.0	5.0	.80	2.0§	10m	.50	0	7	ROM	PN22aw	DLØ
44	6289-2J	1024	8	SC	BTD	55n	850m	0.0	5.0	.80	2.0	10m	.50	0	7	ROM	B348	DL20q
45	6289-2N	1024	8	SC	BTD	55n	850m	0.0	5.0	.80	2.0	10m	.50	0	7	ROM	B348	DL20p
46	93464DM	1024	8	SC	BTD	60n	750m♦	0.0	5.0	.80	2.0§	16m	.45	5	C		B162	DL24bg
47	93464FM	1024	8	SC	BTD	60n	750m♦	0.0	5.0	.80	2.0§	16m	.45	5	C		B162	FL3c
48	DM85S28J	1024	8	SC	BTD	70n	850m	0.0	5.0	.80	2.0§	16m	.45	0	7		B131	ML183a
49	DM85S28N	1024	8	SC	BTD	70n	850m	0.0	5.0	.80	2.0§	16m	.45	0	7		B131	DL24au
50	DM85S29J	1024	8	SC	BTD	70n	850m	0.0	5.0	.80	2.0Δ	16m	.45	0	7		B131	ML183a
51	DM85S29N	1024	8	SC	BTD	70n	850m	0.0	5.0	.80	2.0Δ	16m	.45	0	7		B131	DL24au
52	MCM7680DCL	1024	8	SC	BTD	70n		0.0	5.0	.80	2.0Δ	100uΔ	5.0	0	7	PROM	PN24dw	DL24cq
53	MCM7681DCL	1024	8	SC	BTD	70n		0.0	5.0	.80	2.0§			0	7	PROM	PN24dw	DL24cq
54	5280-2N	1024	8	SC	BTD	75n	850m	0.0	5.0	.80	2.0Δ	8.0m	.50	5	C	ROM	PN24ag	DL24co
55	5281-2N	1024	8	SC	BTD	75n	900m	0.0	5.0	.80	2.0§	8.0m	.50	5	C	ROM	PN24ag	DL24co
56	5286-2J	1024	8	SC	BTD	75n	850m	0.0	5.0	.80	2.0Δ	8.0m	.50	5	C	ROM	PN22aw	ML284
57	5286-2N	1024	8	SC	BTD	75n	850m	0.0	5.0	.80	2.0Δ	8.0m	.50	5	C	ROM	PN22aw	DLØ
58	5287-2J	1024	8	SC	BTD	75n	900m	0.0	5.0	.80	2.0§	8.0m	.50	5	C	ROM	PN22aw	ML284
59	5287-2N	1024	8	SC	BTD	75n	900m	0.0	5.0	.80	2.0§	8.0m	.50	5	C	ROM	PN22aw	DLØ
60	5289-2J	1024	8	SC	BTD	75n	850m	0.0	5.0	.80	2.0	8.0m	.50	5	C	ROM	B348	DL20q
61	5289-2N	1024	8	SC	BTD	75n	850m	0.0	5.0	.80	2.0	8.0m	.50	5	C	ROM	B348	DL20p
62	MCM7680DML	1024	8	SC	BTD	85n		0.0	5.0	.80	2.0Δ	100uΔ	5.0	5	C	PROM	PN24dw	DL24cq
63	MCM7681DML	1024	8	SC	BTD	85n		0.0	5.0	.80	2.0§			5	C	PROM	PN24dw	DL24cq
64	DM75S28J	1024	8	SC	BTD	90n	850m	0.0	5.0	.80	2.0§	16m	.50	5	C		B131	ML183a
65	DM75S29J	1024	8	SC	BTD	90n	850m	0.0	5.0	.80	2.0Δ	16m	.50	5	C		B131	ML183a
66	IM53S08CDG	1024	8	SC	BTD	90n	650m	0.0	5.0	.80	2.0Δ	8.0m	.45	0	7		B248	DLØ
67	IM53S08CJG	1024	8	SC	BTD	90n	650m	0.0	5.0	.80	2.0Δ	8.0m	.45	0	7		B248	DL24ac
68	IM53S18CDG	1024	8	SC	BTD	90n	650m	0.0	5.0	.80	2.0§	8.0m	.45	0	7		B248	DLØ
69	IM53S18CJG	1024	8	SC	BTD	90n	650m	0.0	5.0	.80	2.0§	8.0m	.45	0	7		B248	DL24ac
70	6280-1N	1024	8	SC	BTD	100n	850m	0.0	5.0	.80	2.0Δ	10m	.50	0	7	ROM	PN24ag	DL24co
71	6281-1N	1024	8	SC	BTD	100n	900m	0.0	5.0	.80	2.0§	10m	.50	0	7	ROM	PN24ag	DL24co
72	6282-1F	1024	8	SC	BTD	100n	850m	0.0	5.0	.80	2.0Δ	10m	.50	0	7	ROM	PN24ag	FL50
73	6282-1N	1024	8	SC	BTD	100n	850m	0.0	5.0	.80	2.0Δ	10m	.50	0	7	ROM	PN24ag	DL24co
74	6283-1N	1024	8	SC	BTD	100n	900m	0.0	5.0	.80	2.0§	10m	.50	0	7	ROM	PN24ag	DL24co
75	6284-1F	1024	8	SC	BTD	100n	850m	0.0	5.0	.80	2.0Δ	10m	.50	0	7	ROM	PN24ec	FL50
76	6284-1J	1024	8	SC	BTD	100n	850m	0.0	5.0	.80	2.0Δ	10m	.50	0	7	ROM	PN24ec	DL24cn
77	6284-1N	1024	8	SC	BTD	100n	850m	0.0	5.0	.80	2.0Δ	10m	.50	0	7	ROM	PN24ec	DL24co
78	6285-1F	1024	8	SC	BTD	100n	900m	0.0	5.0	.80	2.0§	10m	.50	0	7	ROM	PN24ec	FL50
79	6285-1J	1024	8	SC	BTD	100n	900m	0.0	5.0	.80	2.0§	10m	.50	0	7	ROM	PN24ec	DL24cn
80	6285-1N	1024	8	SC	BTD	100n	900m	0.0	5.0	.80	2.0§	10m	.50	0	7	ROM	PN24ec	DL24co
81	6286-1J	1024	8	SC	BTD	100n	850m	0.0	5.0	.80	2.0Δ	10m	.50	0	7	ROM	PN22aw	ML284
82	6286-1N	1024	8	SC	BTD	100n	850m	0.0	5.0	.80	2.0Δ	10m	.50	0	7	ROM	PN22aw	DLØ
83	6287-1J	1024	8	SC	BTD	100n	900m	0.0	5.0	.80	2.0§	10m	.50	0	7	ROM	PN22aw	ML284
84	6287-1N	1024	8	SC	BTD	100n	900m	0.0	5.0	.80	2.0§	10m	.50	0	7	ROM	PN22aw	DLØ
85	6289-1J	1024	8	SC	BTD	100n	850m	0.0	5.0	.80	2.0	10m	.50	0	7	ROM	B348	DL20q
86	6289-1N	1024	8	SC	BTD	100n	850m	0.0	5.0	.80	2.0	10m	.50	0	7	ROM	B348	DL20p
87	IM53S08MDG	1024	8	SC	BTD	100n	650m	0.0	5.0	.80	2.0Δ	8.0m	.45	5	C		B248	DLØ
88	IM53S08MJG	1024	8	SC	BTD	100n	650m	0.0	5.0	.80	2.0Δ	8.0m	.45	5	C		B248	DL24ac
89	IM53S18MDG	1024	8	SC	BTD	100n	650m	0.0	5.0	.80	2.0§	8.0m	.45	5	C		B248	DLØ
90	IM53S18MJG	1024	8	SC	BTD	100n	650m	0.0	5.0	.80	2.0§	8.0m	.45	5	C		B248	DL24ac
91	A5280D	1024	8	SC	BTD	150n	850m	0.0	5.0	.80	2.0	8.0m	.50	5	C		B131	ML47c
92	A5281D	1024	8	SC	BTD	150n	850m	0.0	5.0	.80	2.0§	8.0m	.50	5	C		B131	ML47c
93	A6280D	1024	8	SC	BTD	150n	850m	0.0	5.0	.80	2.0	10m	.50	0	7		B131	ML47c
94	A6281D	1024	8	SC	BTD	150n	850m	0.0	5.0	.80	2.0§	10m	.50	0	7		B131	ML47c
95	5280-1N	1024	8	SC	BTD	175n	850m	0.0	5.0	.80	2.0Δ	8.0m	.50	5	C	ROM	PN24ag	DL24co
96	5281-1N	1024	8	SC	BTD	175n	900m	0.0	5.0	.80	2.0§	8.0m	.50	5	C	ROM	PN24ag	DL24co
97	5282-1N	1024	8	SC	BTD	175n	850m	0.0	5.0	.80	2.0Δ	8.0m	.50	5	C	ROM	PN24ag	DL24co
98	5283-1N	1024	8	SC	BTD	175n	900m	0.0	5.0	.80	2.0§	8.0m	.50	5	C	ROM	PN24ag	DL24co
99	5284-1F	1024	8	SC	BTD	175n	850m	0.0	5.0	.80	2.0Δ	8.0m	.50	5	C	ROM	PN24ec	FL50
100	5284-1J	1024	8	SC	BTD	175n	850m	0.0	5.0	.80	2.0Δ	8.0m	.50	5	C	ROM	PN24ec	DL24cn
101	5284-1N	1024	8	SC	BTD	175n	850m	0.0	5.0	.80	2.0Δ	8.0m	.50	5	C	ROM	PN24ec	DL24co
102	5285-1F	1024	8	SC	BTD	175n	900m	0.0	5.0	.80	2.0§	8.0m	.50	5	C	ROM	PN24ec	FL50
103	5285-1J	1024	8	SC	BTD	175n	900m	0.0	5.0	.80	2.0§	8.0m	.50	5	C	ROM	PN24ec	DL24cn
104	5285-1N	1024	8	SC	BTD	175n	900m	0.0	5.0	.80	2.0§	8.0m	.50	5	C	ROM	PN24ec	DL24co
105	5286-1J	1024	8	SC	BTD	175n	850m	0.0	5.0	.80	2.0Δ	8.0m	.50	5	C	ROM	PN22aw	ML284
106	5286-1N	1024	8	SC	BTD	175n	850m	0.0	5.0	.80	2.0Δ	8.0m	.50	5	C	ROM	PN22aw	DLØ
107	5287-1J	1024	8	SC	BTD	175n	900m	0.0	5.0	.80	2.0§	8.0m	.50	5	C	ROM	PN22aw	ML284
108	5287-1N	1024	8	SC	BTD	175n	900m	0.0	5.0	.80	2.0§	8.0m	.50	5	C	ROM	PN22aw	DLØ
109	5289-1J	1024	8	SC	BTD	175n	850m	0.0	5.0	.80	2.0	8.0m	.50	5	C	ROM	B348	DL20q
110	5289-1N	1024	8	SC	BTD	175n	850m	0.0	5.0	.80	2.0	8.0m	.50	5	C	ROM	B348	DL20p

SYMBOLS AND CODES EXPLAINED IN INTERPRETER

3. READ ONLY MEMORIES (ROMS)

IN ORDER OF (1)No.WDS(2)No.BITS/WD(3)OP.MODE PRG.CODE(4)STRUCT.(5)MAX ACC.TIME(6)TYPE No.

LINE No.	6 TYPE NUMBER	ORGANIZATION 1 NO. WORDS	2 BITS PER WORD	3 OP MODE PROG CODE	4 STRUC-TURE CODE	5 MAX. ACCESS TIME (S)	MAX. POWER DISS. (W)	POWER SUPPLY SPAN NEG. (V)	POS. (V)	INPUT LOGIC LEVELS MAX. '0' (V)	MIN. '1' (V)	MIN.OUTPUT SINK CURRENT (A)	@ OUT (V)	OPER TEMP RNGE CODE -	+	GENERAL DESCRIPTION	DRAWINGS FUNCTIONAL EQUIVALENT NUMBER	OUTLINE
1	S82S181AI	1024	8	SC	BXX	80n			7.0	0.80	2.0§	9.6m	0.50	5	C	PROM	B304	DL24Ø
2	SCP1834	1024	8	SC	MCG	350n	60m†	0.0	10	.01%	9.9	2.5	.50	5	C	PR	B459	DLØ
3	SCP1834L	1024	8	SC	MCG	850n	15m†	0.0	5.0	.01%	4.9	2.8	.50	5	C	PR	B459	DLØ
4	SCP1833C	1024	8	SC	MCX	350n	5.0m†	0.0	10	3.0	7.0	3.6m	10	5	C	ROM	B356	DLØ
5	SCP1833E	1024	8	SC	MCX	350n	5.0m†	0.0	10	3.0	7.0	3.6m	10	4	8	ROM	B356	DL24ek
6	SCP1834C	1024	8	SC	MCX	350n	5.0m†	0.0	10	3.0	7.0	3.6m	10	5	C	ROM	B357	DLØ
7	SCP1834E	1024	8	SC	MCX	350n	5.0m†	0.0	10	3.0	7.0	3.6m	10	4	8	ROM	B357	DL24ek
8	SCP1833LC	1024	8	SC	MCX	850n	500u†	0.0	5.0	1.5	3.5	2.2m	5.0	5	C	ROM	B356	DLØ
9	SCP1833LE	1024	8	SC	MCX	850n	500u†	0.0	5.0	1.5	3.5	2.2m	5.0	4	8	ROM	B356	DL24ek
10	SCP1834LC	1024	8	SC	MCX	850n	500u†	0.0	5.0	1.5	3.5	2.2m	5.0	5	C	ROM	B357	DLØ
11	SCP1834LE	1024	8	SC	MCX	850n	500u†	0.0	5.0	1.5	3.5	2.2m	5.0	4	8	ROM	B357	DL24ek
12	NC6560AL#1	1024	8	SC	MNA	290n	925m	5.0	12	.80	3.0§	1.6m	.40	0	7		B121	DL24q
13	NC6560AP#1	1024	8	SC	MNA	290n	925m	5.0	12	.80	3.0§	1.6m	.40	0	7		B121	DL24q
14	EA4700DC	1024	8	SC	MNA	350n	800m	0.0	5.0	.80	2.2§	1.6m	.40	0	7		B484	DL24as
15	EA4700PC	1024	8	SC	MNA	350n	1.2	0.0	5.0	.80	2.2§	1.6m	.40	0	7		B484	DL24dt
16	NC6560L#1	1024	8	SC	MNA	350n	925m	3.0	12	.80	3.0§	1.6m	.40	0	7		B121	DL24q
17	NC6560P#1	1024	8	SC	MNA	350n	925m	3.0	12	.80	3.0§	1.6m	.40	0	7		B121	DL24q
18	EA2308AC	1024	8	SC	MNA	400n	1.2	0.0	5.0	.80	2.2§	2.0m	.45	0	7		B484	DL24dt
19	EA2308AP	1024	8	SC	MNA	400n	800m	0.0	5.0	.80	2.2§	2.0m	.45	0	7		B484	DL24as
20	EA4700DC1	1024	8	SC	MNA	400n	800m	0.0	5.0	.80	2.2§	1.6m	.40	0	7		B189	DL24as
21	EA4700PC1	1024	8	SC	MNA	400n	1.2	0.0	5.0	.80	2.2§	1.6m	.40	0	7		B189	DL24dt
22	EA4700DM	1024	8	SC	MNA	550n	800m	0.0	5.0	.80	2.2§	1.6m	.40	5	C		B189	DL24as
23	MB8308E	1024	8	SC	MNG	250n	775m	5.0	12	.80	2.4§	2.0m	.45	0	7		B190	ML207e
24	MCM68B30AC	1024	8	SC	MNG	250n	650m	0.0	5.0	.80	2.0§	1.6m	.40	0	7		B187	DL24cq
25	MCM68B30AP	1024	8	SC	MNG	250n	650m	0.0	5.0	.80	2.0§	1.6m	.40	0	7		B187	DL24br
26	MCM68B308C	1024	8	SC	MNG	250n	650m	0.0	5.0	.80	2.0§	1.6m	.40	0	7		B290	DL24cq
27	MCM68B308L	1024	8	SC	MNG	250n	650m	0.0	5.0	0.8	2.0§			0	6		B290	DL24dk
28	MCM68B308P	1024	8	SC	MNG	250n	650m	0.0	5.0	.80	2.0§	1.6m	.40	0	7		B290	DL24br
29	AM9208CDC	1024	8	SC	MNG	300n	1.0	0.0	5.0	.80	2.4	3.2m	.40	0	7		B188	DL24dh
30	MCM68A308L	1024	8	SC	MNG	350n	650m	0.0	5.0	0.8	2.0§			0	6		B290	DL24dk
31	MCM65308L	1024	8	SC	MNG	350n	1.0	5.0	12	0.8	4.0§			0	6		B452	DL24dk
32	MCM65308P	1024	8	SC	MNG	350n	1.0	5.0	12		4.0§			0	6		B452	DL24cb
33	MK30000N	1024	8	SC	MNG	350n	300m	0.0	5.0	.80	2.0§	3.3m	.40	0	7		B260	DL24a
34	MK30000P	1024	8	SC	MNG	350n	300m	0.0	5.0	.80	2.0§	3.3m	.40	0	7		B260	DL24dd
35	AM9208BDC	1024	8	SC	MNG	400n	1.0	0.0	5.0	.80	2.4	3.2m	.40	0	7		B188	DL24dh
36	AM9208BDM	1024	8	SC	MNG	400n	1.0	0.0	5.0	.80	2.6	3.2m	.40	5	C		B188	DL24dh
37	2607I	1024	8	SC	MNG	450n	525m	0.0	5.0	.65	2.2§	2.0m	.45	0	7	CS ROM	B190	DL24dk
38	2608-1F	1024	8	SC	MNG	450n	400m	0.0	5.0	.65	2.2§	1.6m	.45	0	7	ROM	B195	DL24cb
39	2608-1I	1024	8	SC	MNG	450n	420m	0.0	5.0	.65	2.2§	1.6m	.45	0	7	CS ROM	B195	DL24dk
40	2608-1N	1024	8	SC	MNG	450n	420m	0.0	5.0	.65	2.2§	1.6m	.45	0	7	CS ROM	B195	DL24ar
41	D2308	1024	8	SC	MNG	450n	1.0 Ø	5.0	12	.80	3.3§	2.0m	.45	2	8		B163	ML133c
42	MB8308N	1024	8	SC	MNG	450n	775m	5.0	12	.80	2.4§	2.0m	.45	0	7		B190	ML207e
43	C2308	1024	8	SC	MNG	500n	1.0 Ø	5.0	12	.80	3.3§	2.0m	.45	2	8	CS	B163	DL24bk
44	HN46830A	1024	8	SC	MNG	500n		0.0	5.0	.80	2.0§	1.6m	.45	0	7		B187	ML207h
45	MCM6830AL	1024	8	SC	MNG	500n		0.0	5.0	.80	2.0§	10uΔ	.40	0	7	PROM	B187	DL24e
46	MCM68308L	1024	8	SC	MNG	500n	650m	0.0	5.0	0.8	2.0§			0	6		B453	DL24dk
47	MCM68308P	1024	8	SC	MNG	500n	650m	0.0	5.0	0.8	2.0§			0	6		B453	DL24cb
48	P2308	1024	8	SC	MNG	500n	1.0 Ø	5.0	12	.80	3.3§	2.0m	.45	2	8	CS	B163	DL24aj
49	uPD465D	1024	8	SC	MNG	500n	311m†	5.0	12	.70	3.0§	1.7m	.50	1	7		B420	DL24bj
50	MCM6560L#1	1024	8	SC	MNX	350n	1.0	3.0	12	.80	4.0§	1.6m	.40	0	7		B121	DL24d
51	MCM6560P#1	1024	8	SC	MNX	350n	1.0	3.0	12	.80	4.0§	1.6m	.40	0	7		B121	DL24br
52	NCM6560AL	1024	8	SC	MNX	350n	600m†	3.0	12	.80	3.0§	1.6m	.40	0	7		B121	DL24ef
53	NCM6560AP	1024	8	SC	MNX	350n	600m†	3.0	12	.80	3.0§	1.6m	.40	0	7		B121	DL24ef
54	MM5242J	1024	8	SC	MNX	450n	650m	0.0	5.0	.65	2.0§	3.2m	.40	0	7	ROM	B364	ML183a
55	MM5242N	1024	8	SC	MNX	450n	650m	0.0	5.0	.65	2.0§	3.2m	.40	0	7	ROM	B364	DL24au
56	uPD2308C	1024	8	SC	MNX	450n	545m	5.0	12	.80	2.4§	2.0m	.45	1	7		B422	DL24ee
57	uPD2308D	1024	8	SC	MNX	450n	545m	5.0	12	.80	2.4§	2.0m	.45	1	7		B422	DL24bz
58	EA2308AL	1024	8	SC	MNX	550n	825m	0.0	5.0	2.2	0.8§	100uΔ		5	9	2CS	B484	DL16ce
59	EA4700DL	1024	8	SC	MNX	550n	825m	0.0	5.0	2.2	0.8§	100uΔ		5	9	4CS	B484	DL16ce
60	MM4242J	1024	8	SC	MNX	575n	650m	0.0	5.0	.65	2.0§	3.2m	.40	5	C	ROM	B364	ML183a
61	B2758	1024	8	SE		450n	525m	0.0	5.0	.80	2.0§	2.1m	.45	0	7	EPROM	B298	ML267
62	D2758	1024	8	SE		450n	525m	0.0	5.0	.80	2.0§	2.1m	.45	0	7	EPROM	B298	DL24cs
63	MN2758	1024	8	SE		450n	500m	0.0	5.0	.80	2.2			1	7	EP ROM	B298	DL24dj
64	53S880F	1024	8	SE	BTD	34n	585m†	0.0	5.0	.80	2.0Δ	16m	.50	5	C	PROM	PN24ag	FL50
65	53S880J	1024	8	SE	BTD	34n	585m†	0.0	5.0	.80	2.0Δ	16m	.50	5	C	PROM	PN24ag	DL24cn
66	53S880N	1024	8	SE	BTD	34n	585m†	0.0	5.0	.80	2.0Δ	16m	.50	5	C	PROM	PN24ag	DL24co
67	53S881F	1024	8	SE	BTD	34n	585m†	0.0	5.0	.80	2.0§	16m	.50	5	C	PROM	PN24ag	FL50
68	53S881J	1024	8	SE	BTD	34n	585m†	0.0	5.0	.80	2.0§	16m	.50	5	C	PROM	PN24ag	DL24cn
69	53S881N	1024	8	SE	BTD	34n	585m†	0.0	5.0	.80	2.0§	16m	.50	5	C	PROM	PN24ag	DL24co
70	63S880F	1024	8	SE	BTD	34n	585m†	0.0	5.0	.80	2.0Δ	16m	.45	0	7	PROM	PN24ag	FL50
71	63S880J	1024	8	SE	BTD	34n	585m†	0.0	5.0	.80	2.0Δ	16m	.45	0	7	PROM	PN24ag	DL24cn
72	63S880N	1024	8	SE	BTD	34n	585m†	0.0	5.0	.80	2.0Δ	16m	.45	0	7	PROM	PN24ag	DL24co
73	63S881F	1024	8	SE	BTD	34n	585m†	0.0	5.0	.80	2.0§	16m	.45	0	7	PROM	PN24ag	FL50
74	63S881J	1024	8	SE	BTD	34n	585m†	0.0	5.0	.80	2.0§	16m	.45	0	7	PROM	PN24ag	DL24cn
75	63S881N	1024	8	SE	BTD	34n	585m†	0.0	5.0	.80	2.0§	16m	.45	0	7	PROM	PN24ag	DL24co
76	53RA881J	1024	8	SE	BTD	35n	625m†	0.0	5.0	.80	2.0	16m	.50	5	C	PROM;Reg	B338	DL24cn
77	53RA881N	1024	8	SE	BTD	35n	625m†	0.0	5.0	.80	2.0	16m	.50	5	C	PROM;Reg	B338	DL24co
78	53RA883J	1024	8	SE	BTD	35n	625m†	0.0	5.0	.80	2.0	16m	.50	5	C	PROM;Reg	B338	ML282
79	53RA883N	1024	8	SE	BTD	35n	625m†	0.0	5.0	.80	2.0	16m	.50	5	C	PROM;Reg	B338	DL24bi
80	63RA881J	1024	8	SE	BTD	35n	625m†	0.0	5.0	.80	2.0	20m	.50	0	7	PROM;Reg	B338	DL24cn
81	63RA881N	1024	8	SE	BTD	35n	625m†	0.0	5.0	.80	2.0	20m	.50	0	7	PROM;Reg	B338	DL24co
82	63RA883J	1024	8	SE	BTD	35n	625m†	0.0	5.0	.80	2.0	20m	.50	0	7	PROM;Reg	B338	ML282
83	63RA883N	1024	8	SE	BTD	35n	625m†	0.0	5.0	.80	2.0	20m	.50	0	7	PROM;Reg	B338	DL24bi
84	53PS880F	1024	8	SE	BTD	39n	585m†	0.0	5.0	.80	2.0Δ	16m	.50	5	C	PROM;Pwr Sw	PN24ag	FL50
85	53PS880J	1024	8	SE	BTD	39n	585m†	0.0	5.0	.80	2.0Δ	16m	.50	5	C	PROM;Pwr Sw	PN24ag	DL24cn
86	53PS880N	1024	8	SE	BTD	39n	585m†	0.0	5.0	.80	2.0Δ	16m	.50	5	C	PROM;Pwr Sw	PN24ag	DL24co
87	53PS881F	1024	8	SE	BTD	39n	585m†	0.0	5.0	.80	2.0§	16m	.50	5	C	PROM;Pwr Sw	PN24ag	FL50
88	53PS881J	1024	8	SE	BTD	39n	585m†	0.0	5.0	.80	2.0§	16m	.50	5	C	PROM;Pwr Sw	PN24ag	DL24cn
89	53PS881N	1024	8	SE	BTD	39n	585m†	0.0	5.0	.80	2.0§	16m	.50	5	C	PROM;Pwr Sw	PN24ag	DL24co
90	63PS880F	1024	8	SE	BTD	39n	585m†	0.0	5.0	.80	2.0Δ	16m	.45	0	7	PROM;Pwr Sw	PN24ag	FL50
91	63PS880J	1024	8	SE	BTD	39n	585m†	0.0	5.0	.80	2.0Δ	16m	.45	0	7	PROM;Pwr Sw	PN24ag	DL24cn
92	63PS880N	1024	8	SE	BTD	39n	585m†	0.0	5.0	.80	2.0Δ	16m	.45	0	7	PROM;Pwr Sw	PN24ag	DL24co
93	63PS881F	1024	8	SE	BTD	39n	585m†	0.0	5.0	.80	2.0§	16m	.45	0	7	PROM;Pwr Sw	PN24ag	FL50
94	63PS881J	1024	8	SE	BTD	39n	585m†	0.0	5.0	.80	2.0§	16m	.45	0	7	PROM;Pwr Sw	PN24ag	DL24cn
95	63PS881N	1024	8	SE	BTD	39n	585m†	0.0	5.0	.80	2.0§	16m	.45	0	7	PROM;Pwr Sw	PN24ag	DL24co
96	MCM7660L	1024	8	SE	BTD	40n		0.0	5.0							Open Coll	B455	
97	MCM7660P	1024	8	SE	BTD	40n		0.0	5.0							Open Coll	B455	
98	MCM7661L	1024	8	SE	BTD	40n		0.0	5.0							Tri State	B455	
99	29630DC	1024	8	SE	BTD	45n	850m	0.0	5.0	.80	2.0Δ	16m	.50	0	7	PROM	B314	DLØ
100	29630DM	1024	8	SE	BTD	45n	850m	0.0	5.0	.80	2.0Δ	16m	.50	5	C	PROM	B314	DLØ
101	29634DC	1024	8	SE	BTD	45n	850m	0.0	5.0	.80	2.0Δ	16m	.50	0	7	PROM	B315	DLØ
102	29634DM	1024	8	SE	BTD	45n	850m	0.0	5.0	.80	2.0Δ	16m	.50	5	C	PROM	B315	DLØ
103	29635DC	1024	8	SE	BTD	45n	850m	0.0	5.0	.80	2.0§	16m	.50	0	7	PROM	B315	DLØ
104	29635DM	1024	8	SE	BTD	45n	850m	0.0	5.0	.80	2.0§	16m	.50	5	C	PROM	B315	DLØ
105	MB7130HC	1024	8	SE	BTD	45n		0.0	5.0	.80	2.0§	16m	.50	0	7	PROM	B526	DL22m
106	MB7131HC	1024	8	SE	BTD	45n	875m	0.0	5.0	.80	2.0Δ	16m	.50	0	7	PROM	B525	DL24em
107	SN54S478J	1024	8	SE	BTD	45n	625m	0.0	5.0	.80	2.0§	4.0m	.50	5	C	PROM	PN24ag	DL24t
108	SN54S479J	1024	8	SE	BTD	45n	625m	0.0	5.0	.80	2.0Δ	4.0m	.50	5	C	PROM	PN24ag	DL24t
109	SN54S2708J	1024	8	SE	BTD	45n	625m	0.0	5.0	.80	2.0§	12m	.50	5	C	PROM	PN24ec	DL24t
110	SN54S3708J	1024	8	SE	BTD	45n	625m	0.0	5.0	.80	2.0Δ	12m	.50	5	C	PROM	PN24ec	DL24t

SYMBOLS AND CODES EXPLAINED IN INTERPRETER

3. READ ONLY MEMORIES (ROMS)

IN ORDER OF (1)No.WDS(2)No.BITS/WD(3)OP.MODE PRG.CODE(4)STRUCT.(5)MAX ACC.TIME(6)TYPE No.

LINE No.	6 TYPE NUMBER	ORGANIZATION 1 NO. WORDS	2 BITS PER WORD	3 OP MODE PROG CODE	4 STRUC-TURE CODE	5 MAX. ACCESS TIME (S)	MAX. POWER DISS. (W)	POWER SUPPLY SPAN NEG. (V)	POS. (V)	INPUT LOGIC LEVELS MAX. '0' (V)	MIN. '1' (V)	MIN.OUTPUT SINK CURRENT (A)	@ OUT (V)	OPER TEMP RNGE CODE -	+	GENERAL DESCRIPTION	DRAWINGS FUNCTIONAL EQUIVALENT NUMBER	OUTLINE
1	SN74S479J	1024	8	SE	BTD	45n	625m†	0.0	5.0	.80	2.0Δ	12m	.50	0	7	PROM	PN24ag	DL24t
2	29632DC	1024	8	SE	BTD	50n	850m	0.0	5.0	.80	2.0Δ	16m	.50	0	7	PROM;Pwr Sw	B314a	DL∅
3	29632DM	1024	8	SE	BTD	50n	850m	0.0	5.0	.80	2.0Δ	16m	.50	5	C	PROM;Pwr Sw	B314a	DL∅
4	29636DC	1024	8	SE	BTD	50n	850m	0.0	5.0	.80	2.0Δ	16m	.50	0	7	PROM;Pwr Sw	B315a	DL∅
5	29636DM	1024	8	SE	BTD	50n	850m	0.0	5.0	.80	2.0Δ	16m	.50	5	C	PROM;Pwr Sw	B315a	DL∅
6	29637DC	1024	8	SE	BTD	50n	850m	0.0	5.0	.80	2.0§	16m	.50	0	7	PROM;Pwr Sw	B315a	DL∅
7	29637DM	1024	8	SE	BTD	50n	850m	0.0	5.0	.80	2.0§	16m	.50	5	C	PROM;Pwr Sw	B315a	DL∅
8	53LS880F	1024	8	SE	BTD	55n	315m†	0.0	5.0	.80	2.0Δ	12m	.50	5	C	PROM	PN24ag	FL50
9	53LS880J	1024	8	SE	BTD	55n	315m†	0.0	5.0	.80	2.0Δ	12m	.50	5	C	PROM	PN24ag	DL24cn
10	53LS880N	1024	8	SE	BTD	55n	315m†	0.0	5.0	.80	2.0Δ	12m	.50	5	C	PROM	PN24ag	DL24co
11	53LS881F	1024	8	SE	BTD	55n	315m†	0.0	5.0	.80	2.0§	12m	.50	5	C	PROM	PN24ag	FL50
12	53LS881J	1024	8	SE	BTD	55n	315m†	0.0	5.0	.80	2.0§	12m	.50	5	C	PROM	PN24ag	DL24cn
13	53LS881N	1024	8	SE	BTD	55n	315m†	0.0	5.0	.80	2.0§	12m	.50	5	C	PROM	PN24ag	DL24co
14	63LS880F	1024	8	SE	BTD	55n	315m†	0.0	5.0	.80	2.0Δ	16m	.45	0	7	PROM	PN24ag	FL50
15	63LS880J	1024	8	SE	BTD	55n	315m†	0.0	5.0	.80	2.0Δ	16m	.45	0	7	PROM	PN24ag	DL24cn
16	63LS880N	1024	8	SE	BTD	55n	315m†	0.0	5.0	.80	2.0Δ	16m	.45	0	7	PROM	PN24ag	DL24co
17	63LS881F	1024	8	SE	BTD	55n	315m†	0.0	5.0	.80	2.0§	16m	.45	0	7	PROM	PN24ag	FL50
18	63LS881J	1024	8	SE	BTD	55n	315m†	0.0	5.0	.80	2.0§	16m	.45	0	7	PROM	PN24ag	DL24cn
19	63LS881N	1024	8	SE	BTD	55n	315m†	0.0	5.0	.80	2.0§	16m	.45	0	7	PROM	PN24ag	DL24co
20	MB7130EC	1024	8	SE	BTD	55n		0.0	5.0	.80	2.0§	16m	.50	0	7	PROM	B526	DL22m
21	MB7131EC	1024	8	SE	BTD	55n	875m	0.0	5.0	.80	2.0Δ	16m	.50	0	7	PROM	B525	DL24em
22	HM1-7683-5	1024	8	SE	BTD	60n	850m	0.0	5.0	.80	2.0	16m	.50	0	7	PROM	B392	ML308
23	HM9-7680P5	1024	8	SE	BTD	60n	850m	0.0	5.0	.80	2.0Δ	16m	.50	0	7	PROM,Pwr Sw	B391	FL55
24	HM9-7680RP5	1024	8	SE	BTD	60n	850m	0.0	5.0	.80	2.0Δ	16m	.50	0	7	PROM,Latch/PD	B391a	FL55
25	HM9-7681P5	1024	8	SE	BTD	60n	850m	0.0	5.0	.80	2.0§	16m	.50	0	7	PROM,Pwr Sw	B391	FL55
26	HM9-7681RP5	1024	8	SE	BTD	60n	850m	0.0	5.0	.80	2.0§	16m	.50	0	7	PROM,Latch/PD	B391a	FL55
27	HM9-7683-5	1024	8	SE	BTD	60n	850m	0.0	5.0	.80	2.0	16m	.50	0	7	PROM	B392	FL56
28	DM87S228J	1024	8	SE	BTD	70n	850m	0.0	5.0	.80	2.0§	16m	.45	0	7	PROM	B368	ML183a
29	DM87S228N	1024	8	SE	BTD	70n	850m	0.0	5.0	.80	2.0§	16m	.45	0	7	PROM	B368	DL24au
30	DM87S229J	1024	8	SE	BTD	70n	850m	0.0	5.0	.80	2.0Δ	16m	.45	0	7	PROM	B368	ML183a
31	DM87S229N	1024	8	SE	BTD	70n	850m	0.0	5.0	.80	2.0Δ	16m	.45	0	7	PROM	B368	DL24au
32	MCM7680DC	1024	8	SE	BTD	70n	750m	0.0	5.0	.80	2.0Δ	16m	.45	0	7	PROM	PN24ao	DL24cq
33	D3608	1024	8	SE	BTD	80n	950m♦	0.0	5.0	.85	2.0Δ	15m	.45	0	7	PROM	B246	ML133c
34	D3628	1024	8	SE	BTD	80n	950m♦	0.0	5.0	.85	2.0§	10m	.45	0	7	PROM	B246	DL24cs
35	HM1-7683-2	1024	8	SE	BTD	80n	850m	0.0	5.0	.80	2.0	16m	.50	5	C	PROM	B392	ML308
36	HM3-7680P2	1024	8	SE	BTD	80n	850m	0.0	5.0	.80	2.0Δ	16m	.50	5	C	PROM,Pwr Sw	B391	DL24cp
37	HM3-7681P2	1024	8	SE	BTD	80n	850m	0.0	5.0	.80	2.0§	16m	.50	5	C	PROM,Pwr Sw	B391	DL24cp
38	HM3-7681RP2	1024	8	SE	BTD	80n	850m	0.0	5.0	.80	2.0§	16m	.50	5	C	PROM,Latch/PD	B391a	DL24cp
39	HM9-7683-2	1024	8	SE	BTD	80n	850m	0.0	5.0	.80	2.0	16m	.50	5	C	PROM	B392	FL56
40	MCM7680DM	1024	8	SE	BTD	85n	850m	0.0	5.0	.80	2.0Δ	16m	.45	5	C	PROM	PN24ao	DL24cq
41	MCM7681DM	1024	8	SE	BTD	85n	850m	0.0	5.0	.80	2.0§	16m	.45	5	C	PROM	PN24ao	DL24cq
42	6380-1F	1024	8	SE	BTD	90n	900m	0.0	5.0	.80	2.0Δ	12m	.50	0	7	PROM	PN24ed	FL50
43	6380-1N	1024	8	SE	BTD	90n	900m	0.0	5.0	.80	2.0Δ	12m	.50	0	7	PROM	PN24ed	DL24co
44	6381-1F	1024	8	SE	BTD	90n	900m	0.0	5.0	.80	2.0§	12m	.50	0	7	PROM	PN24ed	FL50
45	6381-1N	1024	8	SE	BTD	90n	900m	0.0	5.0	.80	2.0§	12m	.50	0	7	PROM	PN24ed	DL24co
46	6384-1F	1024	8	SE	BTD	90n	900m	0.0	5.0	.80	2.0Δ	12m	.50	0	7	PROM	PN24ee	FL50
47	6384-1J	1024	8	SE	BTD	90n	900m	0.0	5.0	.80	2.0Δ	12m	.50	0	7	PROM	PN24ee	DL24cn
48	6384-1N	1024	8	SE	BTD	90n	900m	0.0	5.0	.80	2.0Δ	12m	.50	0	7	PROM	PN24ee	DL24co
49	6385-1F	1024	8	SE	BTD	90n	900m	0.0	5.0	.80	2.0§	12m	.50	0	7	PROM	PN24ee	FL50
50	6385-1J	1024	8	SE	BTD	90n	900m	0.0	5.0	.80	2.0§	12m	.50	0	7	PROM	PN24ee	DL24cn
51	6385-1N	1024	8	SE	BTD	90n	900m	0.0	5.0	.80	2.0§	12m	.50	0	7	PROM	PN24ee	DL24co
52	6386-1J	1024	8	SE	BTD	90n	900m	0.0	5.0	.80	2.0Δ	12m	.50	0	7	PROM	PN22ax	ML284
53	6387-1J	1024	8	SE	BTD	90n	900m	0.0	5.0	.80	2.0§	12m	.50	0	7	PROM	PN22ax	ML284
54	DM77S228J	1024	8	SE	BTD	90n	850m	0.0	5.0	.80	2.0§	16m	.45	5	C	PROM	B368	ML183a
55	DM77S229J	1024	8	SE	BTD	90n	850m	0.0	5.0	.80	2.0Δ	16m	.45	5	C	PROM	B368	ML183a
56	D3608-4	1024	8	SE	BTD	100n	950m♦	0.0	5.0	.85	2.0Δ	15m	.45	0	7	PROM	B246	ML133c
57	D3628-4	1024	8	SE	BTD	100n	950m♦	0.0	5.0	.85	2.0§	10m	.45	0	7	PROM	B246	DL24cs
58	5380-1F	1024	8	SE	BTD	125n	900m	0.0	5.0	.80	2.0Δ	8.0m	.50	5	C	PROM	PN24ed	FL50
59	5380-1N	1024	8	SE	BTD	125n	900m	0.0	5.0	.80	2.0Δ	8.0m	.50	5	C	PROM	PN24ed	DL24co
60	5381-1F	1024	8	SE	BTD	125n	900m	0.0	5.0	.80	2.0§	8.0m	.50	5	C	PROM	PN24ed	FL50
61	5381-1N	1024	8	SE	BTD	125n	900m	0.0	5.0	.80	2.0§	8.0m	.50	5	C	PROM	PN24ed	DL24co
62	5384-1F	1024	8	SE	BTD	125n	900m	0.0	5.0	.80	2.0Δ	8.0m	.50	5	C	PROM	PN24ee	FL50
63	5384-1J	1024	8	SE	BTD	125n	900m	0.0	5.0	.80	2.0Δ	8.0m	.50	5	C	PROM	PN24ee	DL24cn
64	5384-1N	1024	8	SE	BTD	125n	900m	0.0	5.0	.80	2.0Δ	8.0m	.50	5	C	PROM	PN24ee	DL24co
65	5385-1F	1024	8	SE	BTD	125n	900m	0.0	5.0	.80	2.0§	8.0m	.50	5	C	PROM	PN24ee	FL50
66	5385-1J	1024	8	SE	BTD	125n	900m	0.0	5.0	.80	2.0§	8.0m	.50	5	C	PROM	PN24ee	DL24cn
67	5385-1N	1024	8	SE	BTD	125n	900m	0.0	5.0	.80	2.0§	8.0m	.50	5	C	PROM	PN24ee	DL24co
68	5386-1J	1024	8	SE	BTD	125n	900m	0.0	5.0	.80	2.0Δ	8.0m	.50	5	C	PROM	PN22ax	ML284
69	5387-1J	1024	8	SE	BTD	125n	900m	0.0	5.0	.80	2.0§	8.0m	.50	5	C	PROM	PN22ax	ML284
70	5280-IF24	1024	8	SE	BTD	140n		0.0	5.0	.80	2.0§	8.0m	0.5	5	C	ROM	B607	FL93
71	N82LS180F	1024	8	SE	BTD	175n	400m	0.0	5.0	.85	2.0Δ	4.8m	.45	0	7	PROM	B304	DL24cb
72	N82LS180N	1024	8	SE	BTD	175n	400m	0.0	5.0	.85	2.0Δ	4.8m	.45	0	7	PROM	B304	DL24ar
73	S82LS181N	1024	8	SE	BTD	180n	37u%	0.0	5.0	.80	2.0§	4.8m	.50	5	C	Bipolar PROM	B304	DL24ar
74	S82LS180F	1024	8	SE	BTD	225n	425m	0.0	5.0	.80	2.0Δ	4.8m	.50	5	C	PROM	B304	DL24cb
75	MCM82707L	1024	8	SE	BTX	40n		0.0	5.0	.80	2.0Δ	15m				PROM	PN24ec	DL24cq
76	MCM82707P	1024	8	SE	BTX	40n		0.0	5.0	.80	2.0Δ	15m				PROM	PN24ec	DL24br
77	MCM82708L	1024	8	SE	BTX	40n		0.0	5.0	.80	2.0§	15m				PROM	PN24ec	DL24cq
78	MCM82708P	1024	8	SE	BTX	40n		0.0	5.0	.80	2.0§	15m				PROM	PN24ec	DL24br
79	MCM7680LDC	1024	8	SE	BTX	70n	750m	0.0	5.0	.80	2.0Δ	16m	.45	0	7	CS PROM	PN24ao	DL24ao
80	MCM7681LDC	1024	8	SE	BTX	70n	750m	0.0	5.0	.80	2.0§	16m	.45	0	7	CS PROM	PN24ao	DL24ao
81	809-01#2	1024	8	SE	BTX	80n	1.8	0.0	5.0	.40	2.4			0	6		B56	
82	MCM7680LDM	1024	8	SE	BTX	85n	850m	0.0	5.0	.80	2.0Δ	16m	.45	5	C	CS PROM	PN24ao	DL24ao
83	MCM7681LDM	1024	8	SE	BTX	85n	850m	0.0	5.0	.80	2.0§	16m	.45	5	C	CS PROM	PN24ao	DL24ao
84	RC82S180F	1024	8	SE	BTX	90n	925m	0.0	5.0	.80	2.0Δ	9.6m	.50	5	C	PROM	B304	DL24cb
85	RC82S180N	1024	8	SE	BTX	90n	925m	0.0	5.0	.80	2.0Δ	9.6m	.50	5	C	PROM	B304	DL24ar
86	RC82S181F	1024	8	SE	BTX	90n	925m	0.0	5.0	.80	2.0§	9.6m	.50	5	C	PROM	B304	DL24cb
87	RC82S181N	1024	8	SE	BTX	90n	925m	0.0	5.0	.80	2.0§	9.6m	.50	5	C	PROM	B304	DL24ar
88	RC82S2708F	1024	8	SE	BTX	90n	925m	0.0	5.0	.80	2.0§	9.6m	.50	5	C	PROM	B415	DL24cb
89	RC82S2708N	1024	8	SE	BTX	90n	925m	0.0	5.0	.80	2.0§	9.6m	.50	5	C	PROM	B415	DL24ar
90	5380-1D	1024	8	SE	BTX	125n	900m	0.0	5.0	.80	2.0Δ	8.0m	.50	5	C	PROM	B250	DL24bt
91	5381-1D	1024	8	SE	BTX	125n	900m	0.0	5.0	.80	2.0§	8.0m	.50	5	C	PROM	B250	DL24bt
92	5386-1D	1024	8	SE	BTX	125n	900m	0.0	5.0	.80	2.0Δ	8.0m	.50	5	C	PROM	PN22aw	ML8w
93	5387-1D	1024	8	SE	BTX	125n	900m	0.0	5.0	.80	2.0§	8.0m	.50	5	C	PROM	PN22aw	ML8w
94	MB7055C	1024	8	SE	BTX	150n	350m	0.0	5.0	.80	2.0§	16m	.45	0	7	PROM	B543	DL24fx
95	MB7060C	1024	8	SE	BTX	150n	350m	0.0	5.0	.80	2.0Δ	16m	.45	0	7	PROM	B543	DL24fx
96	MB7055	1024	8	SE	BTX	250n	350m†	0.0	5.0	.80	2.0§	3.6m	.45	0	7	Field Prog	B270	ML183a
97	MB7060	1024	8	SE	BTX	250n	350m†	0.0	5.0	.80	2.0Δ	3.6m	.45	0	7	Field Prog	B270	ML183a
98	TMS2508-25JDL	1024	8	SE	MNG	250n	250m†	0.0	5.0	.80	2.0§	2.1m	.45	0	7	EPROM	B225	ML207k
99	TMS2508-25JL	1024	8	SE	MNG	250n	250m†	0.0	5.0	.80	2.0§	2.1m	.45	0	7	EPROM	B225	DL24t
100	SFF71A708J	1024	8	SE	MNG	300n	800m	0.0	5.0	0.65	3.0§	1.6m	0.45	0	7	CS;PROM	B288	DL24dr
101	SFF71A708K	1024	8	SE	MNG	300n	800m	0.0	5.0	0.65	3.0§	1.6m	0.45	0	7	CS;PROM	B288	DL24dr
102	TMS2508-30JDL	1024	8	SE	MNG	300n	250m†	0.0	5.0	.80	2.0§	2.1m	.45	0	7	EPROM	B225	ML207k
103	TMS2508-30JL	1024	8	SE	MNG	300n	250m†	0.0	5.0	.80	2.0§	2.1m	.45	0	7	EPROM	B225	DL24t
104	B2708-1	1024	8	SE	MNG	350n	800m	5.0	12	.65	3.0§	1.6m	.40	2	8	EPROM	B296a	
105	C2708-1	1024	8	SE	MNG	350n	1.0	5.0	12	.65	3.0§	1.6m	.45	0	7		B163b	DL24ed
106	D2708-1	1024	8	SE	MNG	350n	800m	5.0	12	.65	3.0§	10uΔ	5.5	0	6	EPROM	B296a	DL24cs

SYMBOLS AND CODES EXPLAINED IN INTERPRETER

3. READ ONLY MEMORIES (ROMS)

IN ORDER OF (1)No.WDS(2)No.BITS/WD(3)OP.MODE
PRG.CODE(4)STRUCT.(5)MAX ACC.TIME(6)TYPE No.

LINE No.	6 TYPE NUMBER	ORGANIZATION 1 NO. WORDS	2 BITS PER WORD	3 OP MODE PROG CODE	4 STRUC-TURE CODE	5 MAX. ACCESS TIME (S)	MAX. POWER DISS. (W)	POWER SUPPLY SPAN NEG. (V)	POS. (V)	INPUT LOGIC LEVELS MAX. '0' (V)	MIN. '1' (V)	MIN.OUTPUT SINK CURRENT (A)	@ OUT (V)	OPER TEMP RNGE CODE -	+	GENERAL DESCRIPTION	DRAWINGS FUNCTIONAL EQUIVALENT NUMBER	OUTLINE
1	M2708-1D1	1024	8	SE	MNG	350n	800m	5.0	12	.65	3.0§	1.6m	.45	0	7	EPROM	B296a	DL24dn
2	MM2708-1	1024	8	SE	MNG	350n	800m	5.0	12	.80	2.0§	1.6m	.40	0	7	EPROM	B288	DL24do
3	TMS2708-35JDL																	
		1024	8	SE	MNG	350n	800m	5.0	12	.65	2.4§	1.6m	.45	0	7	EPROM	B225	ML207k
4	2708I	1024	8	SE	MNG	450n	1.5 Ø	5.0	12	.65	3.0§	1.6m	.45	0	7	EA ROM	B163b	DL24dk
5	B2708	1024	8	SE	MNG	450n	800m	5.0	12	.65	3.0§	1.6m	.40	2	8	EPROM	B296a	
6	B2708L	1024	8	SE	MNG	450n	425m	5.0	12	.65	2.2§	2.0m	.40	2	8	EPROM	B296a	
7	C2708	1024	8	SE	MNG	450n	800m	5.0	12	.65	3.0§	1.6m	.45	2	8	Erasable PR	B163	DL24ed
8	C2708L	1024	8	SE	MNG	450n	426m	5.0	12	.65	2.2§	2.0m	.40	0	7		B163b	DL24ed
9	C2758	1024	8	SE	MNG	450n	525m	0.0	5.0	.80	2.0§	2.1m	.45	0	7	EPROM	B298	DL24ed
10	D2708	1024	8	SE	MNG	450n	800m	5.0	12	.65	3.0§	10uΔ	5.5	0	6	EPROM	B296a	DL24cs
11	D2708L	1024	8	SE	MNG	450n	425m	5.0	12	.65	2.2§	10uΔ	5.5	0	6	EPROM	B296a	DL24cs
12	EA2708	1024	8	SE	MNG	450n	800m	5.0	12	.65	3.0§	1.6m	.45	0	7	Erasable PROM	B230a	DL24di
13	EA2708DC	1024	8	SE	MNG	450n	630m	5.0	12	.80	2.0§	1.6m	.45	0	7	EPROM	B256a	DL24di
14	H2708	1024	8	SE	MNG	450n	1.5 Ø	5.0	12	.65	3.0§	1.6m	.45	2	8	Erasable Prom	B163	ML232
15	HN462708	1024	8	SE	MNG	450n	1.5 Ø	5.0	12	.65	3.0§	1.6m	.45	0	7	Erasable PROM	B163a	ML207g
16	ID2708	1024	8	SE	MNG	450n	800m	5.0	12	.65	3.0§	10uΔ	5.25	4	8	EPROM	B296a	DL24cs
17	M5L2708S	1024	8	SE	MNG	450n	800m	5.0	12	.65	3.0	1.6m	.45	0	7	EPROM	B296a	DL24dw
18	M2708D1	1024	8	SE	MNG	450n	800m	5.0	12	.65	3.0§	1.6m	.45	0	7	EPROM	B296a	DL24dn
19	MB8518	1024	8	SE	MNG	450n	1.1 Ø	5.0	12	.65	2.4	1.6m	.45	0	7	Erasable	B163	DL24a
20	MB8518H	1024	8	SE	MNG	450n	800m	5.0	12	.65	3.0§	1.6m	.45	0	7	Erasable	B227	ML207e
21	MC2708	1024	8	SE	MNG	450n	750m	5.0	12	.65	3.0§	1.6m	.45	5	A	Erasable PROM	B163a	DL24bp
22	MCM2708P	1024	8	SE	MNG	450n	1.8 Ø	5.0	12	.65	3.0§	1.6m	.45	0	7	PROM	B288	DL24br
23	MCM68708BJCS#ai																	
		1024	8	SE	MNG	450n	750m	5.0	12	0.8	2.0§	1.6m	0.4	5	C	UVEPROM	B288	DL24do
24	MCM68708CJCS#ai																	
		1024	8	SE	MNG	450n	750m	5.0	12	0.8	2.0§	1.6m	0.4	5	C	UVEPROM	B288	DL24do
25	MCM68708MTL#ai																	
		1024	8	SE	MNG	450n	750m	5.0	12	0.8	2.0§	1.6m	0.4	5	C	UVEPROM	B288	DL24do
26	MD2708	1024	8	SE	MNG	450n	800m	5.0	12	.65	3.0§	10uΔ	5.5	5	9	EPROM	B296a	DL24cs
27	MK2708T	1024	8	SE	MNG	450n	450m	5.0	12		§	3.2m	.40	0	7	EPROM	B259	DLØ
28	MM2708M	1024	8	SE	MNG	450n	800m	5.0	12	.80	2.0§	1.6m	.40	5	C	EPROM	B288	DL24do
29	SAB2808	1024	8	SE	MNG	450n	250m	5.0	12	.80	2.2§	2.1m	.40	0	7		PN24bd	DLØ
30	SFF71708J	1024	8	SE	MNG	450n	800m	0.0	5.0	0.65	3.0§	1.6m	0.45	0	7	CS;PROM	B288	DL24dr
31	SFF71708K	1024	8	SE	MNG	450n	800m	0.0	5.0	0.65	3.0§	1.6m	0.45	0	7	CS;PROM	B288	DL24dr
32	TMS27L08JDL	1024	8	SE	MNG	450n	580m	5.0	12	.65	2.2§	1.6m	.40	0	7	EPROM	B225	DL24de
33	TMS2708-45JDL																	
		1024	8	SE	MNG	450n	800m	5.0	12	.65	2.4§	1.6m	.45	0	7	EPROM	B225	ML207k
34	TMS2708JL	1024	8	SE	MNG	450n	800m	5.0	12	.65	2.4§	1.6m	.45	0	7	Erasable PROM	B225	DL24t
35	TMS2758JL0	1024	8	SE	MNG	450n	285m†	0.0	5.0		§			0	7	EPROM	PN24je	DL24ds
36	TMS2758JL1	1024	8	SE	MNG	450n	285m†	0.0	5.0		§			0	7	EPROM	PN24je	DL24ds
37	TMS2758JL	1024	8	SE	MNG	450n	258m†	0.0	5.0	0.8	2.0§	10uΔ	5.25	0	7	UVEPROM	PN24je	DL24Ø
38	EA2708DL	1024	8	SE	MNG	500n	630m	5.0	12	.80	2.0§	1.6m	.45	5	9	EPROM	B256a	DL24di
39	D2708-6	1024	8	SE	MNG	550n	800m	5.0	12	.65	3.0§	10uΔ	5.5	0	6	EPROM	B296a	DL24cs
40	EA2708DM	1024	8	SE	MNG	550n	630m	5.0	12	.80	2.0§	1.6m	.45	5	C	EPROM	B256a	DL24di
41	M5L2708S-65	1024	8	SE	MNG	650n	800m	5.0	12	.65	3.0	1.6m	.45	0	7	EPROM	B296a	DL24dw
42	MB8518E	1024	8	SE	MNG	650n	800m	5.0	12	.65	3.0§	1.6m	.45	0	7	Erasable	B227	ML207e
43	M2708-4D1	1024	8	SE	MNG	700n	800m	5.0	12	.65	3.0§	1.6m	.45	0	7	EPROM	B296a	DL24dn
44	TMM323DI-1	1024	8	SE	MNG	350m	660m	0.0	5.0	0.8	2.2	2.1m	.45	4	8	EPROM		DL24dz
45	2808	1024	8	SE	MNX	350n	.32 †	0.0	5.2	0.8	2.0	2.1m	.45	0	6	EEROM	B500	
46	IM7708CDG	1024	8	SE	MNX	450n	800m	5.0	12	.65	3.0§	1.6m	.45	0	7	EPROM	B163b	ML207j
47	uPD458D	1024	8	SE	MNX	450n	760m†	0.0	12	.70	3.0§	1.7m	.50	1	7		B418	DL28k
48	HN46830	1024	8	SS	MNG	500n	350m†	0.0	5.0	.80	2.0§	10uΔ	2.4	2	7	CSROM	B187	DL24dm
49	HN46830P	1024	8	SS	MNG	500n	350m†	0.0	5.0	.80	2.0§	10uΔ	2.4	2	7	CSROM	B187	DL24bq
50	KM8656	1024	8	SS	MPA	800n	440m	3	12							out:3state TTL		
51	IM53S09CDG	1024	9	SC	BTD	90n	650m	0.0	5.0	.80	2.0Δ	8.0m	.45	0	7		B248	DLØ
52	IM53S09CJG	1024	9	SC	BTD	90n	650m	0.0	5.0	.80	2.0Δ	8.0m	.45	0	7		B248	DL24ac
53	IM53S19CDG	1024	9	SC	BTD	90n	650m	0.0	5.0	.80	2.0§	8.0m	.45	0	7		B248	DLØ
54	IM53S19CJG	1024	9	SC	BTD	90n	650m	0.0	5.0	.80	2.0§	8.0m	.45	0	7		B248	DL24ac
55	6260-1F	1024	9	SC	BTD	100n	825m	0.0	5.0	.80	2.0Δ	6.0m	.50	0	7	ROM	B344	FL50
56	6260-1N	1024	9	SC	BTD	100n	825m	0.0	5.0	.80	2.0Δ	6.0m	.50	0	7	ROM	B344	DL24co
57	6261-1F	1024	9	SC	BTD	100n	875m	0.0	5.0	.80	2.0§	6.0m	.50	0	7	ROM	B344	FL50
58	6261-1N	1024	9	SC	BTD	100n	875m	0.0	5.0	.80	2.0§	6.0m	.50	0	7	ROM	B344	DL24co
59	IM53S09MDG	1024	9	SC	BTD	100n	650m	0.0	5.0	.80	2.0Δ	8.0m	.45	5	C		B248	DLØ
60	IM53S09MJG	1024	9	SC	BTD	100n	650m	0.0	5.0	.80	2.0Δ	8.0m	.45	5	C		B248	DL24ac
61	IM53S19MDG	1024	9	SC	BTD	100n	650m	0.0	5.0	.80	2.0§	8.0m	.45	5	C		B248	DLØ
62	IM53S19MJG	1024	9	SC	BTD	100n	650m	0.0	5.0	.80	2.0§	8.0m	.45	5	C		B248	DL24ac
63	5260-1F	1024	9	SC	BTD	150n	825m	0.0	5.0	.80	2.0Δ	6.0m	.50	5	C	ROM	B344	FL50
64	5260-1N	1024	9	SC	BTD	150n	825m	0.0	5.0	.80	2.0Δ	6.0m	.50	5	C	ROM	B344	DL24co
65	5261-1F	1024	9	SC	BTD	150n	875m	0.0	5.0	.80	2.0§	6.0m	.50	5	C	ROM	B344	FL50
66	5261-1N	1024	9	SC	BTD	150n	875m	0.0	5.0	.80	2.0§	6.0m	.50	5	C	ROM	B344	DL24co
67	5255D	1024	10		BXD	150n	450m†	0.0	5.0	.80	2.0	6.0m	.50	5	C		B125	ML47c
68	6255D	1024	10		BXD	150n	450m†	0.0	5.0	.80	2.0	6.0m	.50	0	7		B125	ML47c
69	IM53S10CDG	1024	10	SC	BTD	90n	650m	0.0	5.0	.80	2.0Δ	8.0m	.45	0	7		B248	DLØ
70	IM53S10CJG	1024	10	SC	BTD	90n	650m	0.0	5.0	.80	2.0Δ	8.0m	.45	0	7		B248	DL24ac
71	IM53S20CDG	1024	10	SC	BTD	90n	650m	0.0	5.0	.80	2.0§	8.0m	.45	0	7		B248	DLØ
72	IM53S20CJG	1024	10	SC	BTD	90n	650m	0.0	5.0	.80	2.0§	8.0m	.45	0	7		B248	DL24ac
73	6255-1F	1024	10	SC	BTD	100n	825m	0.0	5.0	.80	2.0Δ	6.0m	.50	0	7	ROM	B343	FL50
74	6255-1N	1024	10	SC	BTD	100n	825m	0.0	5.0	.80	2.0Δ	6.0m	.50	0	7	ROM	B343	DL24co
75	6256-1F	1024	10	SC	BTD	100n	875m	0.0	5.0	.80	2.0§	6.0m	.50	0	7	ROM	B343	FL50
76	6256-1N	1024	10	SC	BTD	100n	875m	0.0	5.0	.80	2.0§	6.0m	.50	0	7	ROM	B343	DL24co
77	IM53S10MDG	1024	10	SC	BTD	100n	650m	0.0	5.0	.80	2.0Δ	8.0m	.45	5	C		B248	DLØ
78	IM53S10MJG	1024	10	SC	BTD	100n	650m	0.0	5.0	.80	2.0Δ	8.0m	.45	5	C		B248	DL24ac
79	IM53S20MDG	1024	10	SC	BTD	100n	650m	0.0	5.0	.80	2.0§	8.0m	.45	5	C		B248	DLØ
80	IM53S20MJG	1024	10	SC	BTD	100n	650m	0.0	5.0	.80	2.0§	8.0m	.45	5	C		B248	DL24ac
81	5255-1F	1024	10	SC	BTD	150n	825m	0.0	5.0	.80	2.0Δ	6.0m	.50	5	C	ROM	B343	FL50
82	5255-1N	1024	10	SC	BTD	150n	825m	0.0	5.0	.80	2.0Δ	6.0m	.50	5	C	ROM	B343	DL24co
83	5256-1F	1024	10	SC	BTD	150n	875m	0.0	5.0	.80	2.0§	6.0m	.50	5	C	ROM	B343	FL50
84	5256-1N	1024	10	SC	BTD	150n	875m	0.0	5.0	.80	2.0§	6.0m	.50	5	C	ROM	B343	DL24co
85	MRM4B1024-10																	
		1024	10	SC	MXX	330n	9.5	12	12	.40	2.5	1.6m	.40	0	7		B54	PL4
86	IM631Z	1024	12		MCX	700n		0.0	8.0									
87	EA3815	1024	12	DC	MPX	2.5u	350m	12	12	-2.0	-10			0	7		B93	DLØ
88	FDR161BZ	1024	12	DC	MPX	2.5u	300m	24	0.0	-10	-2.0			0	7		B166	ML83a
89	FDY850Z	1024	12	DC	MPX	2.5u	368m	24	0.0	-10	-2.0			0	7		B97	DLØ
90	EA3800#1	1024	12	DC	MPX	3.6u	830m	12	12	-2.0	-10			0	7		B93	ML185
91	EA3800#2	1024	12	DC	MPX	3.6u	1.2	12	12	-2.0	-10			0	7		B93	ML186
92	HM9-6312A9	1024	12	SC	MCG	200n	8.0m♦	0.0	10	2.0	7.0	1.0uΔ		4	8	ROM	B206	FL52
93	HM3-6312A2	1024	12	SC	MCG	220n	8.0m♦	0.0	10	2.0	7.0	1.0uΔ		5	C	ROM	B206	DL18ar
94	HM6322A9	1024	12	SC	MCG	240n	100m	0.0	10	2.0	7.0§			4	8			
95	HM6322C9	1024	12	SC	MCG	250n	25m	0.0	5.0	.80	3.0§			4	8			
96	HM6322-9	1024	12	SC	MCG	300n	25m	0.0	5.0	.80	3.0§			4	8			
97	HM9-6312-9	1024	12	SC	MCG	510n	500u♦	0.0	5.0	1.0	3.5	1.0uΔ		4	8	ROM	B206	FL52
98	HM3-6312-2	1024	12	SC	MCG	560n	500u♦	0.0	5.0	1.0	3.5	1.0uΔ		5	C	ROM	B206	DL18ar
99	HM9-6312C9	1024	12	SC	MCG	640n	2.5m♦	0.0	5.0	1.0	3.5	1.0uΔ		4	8	ROM	B206	FL52
100	MM5215AD	1024	12	SC	MPI	3.0u	300mØ	12	12	10*	3.0§			0	7		B174a	ML29a
101	MM5215AN	1024	12	SC	MPI	3.0u	300mØ	12	12	10*	3.0§			0	7		B174a	DL28h
102	MM5212AD	1024	12	SC	MPI	5.0u	170m	12	5.0	.80	2.8	2.5m♦	2.4	0	7		B174	ML29a
103	MM5212AN	1024	12	SC	MPI	5.0u	170m	12	5.0	.80	2.8	2.5m♦	2.4	0	7		B174	DL28h
104	DM8581D	1024	16	SC	BTX	450n	800m	0.0	5.0	.80	2.0§	6.0m	.45	0	7		B245	ML14d

SYMBOLS AND CODES EXPLAINED IN INTERPRETER

3. READ ONLY MEMORIES (ROMS)

IN ORDER OF (1)No.WDS(2)No.BITS/WD(3)OP.MODE PRG.CODE(4)STRUCT.(5)MAX ACC.TIME(6)TYPE No.

LINE No.	6 TYPE NUMBER	ORGANIZATION 1 NO. WORDS	2 BITS PER WORD	3 OP MODE PROG CODE	4 STRUC-TURE CODE	5 MAX. ACCESS TIME (S)	MAX. POWER DISS. (W)	POWER SUPPLY SPAN NEG. (V)	POS. (V)	INPUT LOGIC LEVELS MAX. '0' (V)	MIN. '1' (V)	MIN.OUTPUT SINK CURRENT (A)	@ OUT (V)	OPER TEMP RNGE CODE -	+	GENERAL DESCRIPTION	DRAWINGS FUNCTIONAL EQUIVALENT NUMBER	OUTLINE
1	DM8581N	1024	16	SC	BTX	450n	800m	0.0	5.0	.80	2.0§	6.0m	.45	0	7		B245	ML257
2	MRM3C1024-20	1024	20	SC	MXX	330n	9.5	12	12	.40	2.5	1.6m	.40	0	7		B54	PL4
3	MCS2022#2	1152	7	DC	MPX	160n	300m	5.0	5.0	.80	3.5	1.6m	.40	2	8	7x9x128	C34	DLØ
4	MCS2006	1280	2	SC	MPN	800n	450mØ	12	5.0	.80	3.5			2	8		PN24z	DLØ
5	MK31000P-3	2000	8	SC	MNG	550n	1.0 Ø	0.0	5.0	.80	2.0§	10u△	0.0	0	7		B78b	DL24dd
6	MCS2009	2048	1	SC	MPN	800n	450mØ	12	5.0	.80	3.5			2	8		PN24z	DLØ
7	RO1-2048#1	2048	1	SC	MPT	750n	140m†	24	0.0	-2.0	-24	3.0m		5	8		B49	ML47
8	MM4224D#4	2048	1	SC	MPX	1.0u	480m♦	15	5.0	.80	2.4§	1.6m	.40	5	C		B9a	ML130
9	MM4225D#4	2048	1	SC	MPX	1.0u	480m♦	15	5.0	.80	2.4§	1.6m	.40	5	C		B9a	ML130
10	MM5224D#4	2048	1	SC	MPX	1.0u	480m♦	15	5.0	.80	2.4§	1.6m	.40	2	7		B9a	ML130
11	MM5225D#4	2048	1	SC	MPX	1.0u	480m♦	15	5.0	.80	2.4§	1.6m	.40	2	7		B9a	ML130
12	UA2548#4	2048	1	SC	MXX	900n	600m	20	0.0	.80♦	2.7	1.6m	.40	5	C		B9a	DL24ay
13	UA3548#4	2048	1	SC	MXX	900n	600m	20	0.0	.80♦	2.7	1.6m	.40	2	7		B9a	DL24ay
14	HRM2048#1	2048	1	SE	TAX	500n	640m♦	0.0	5.0	2.0	.80			0	7	PR Non-Vol RMM	B31	DL42a
15	GER542W1#2	2048	2	SC	MXR	500n	350m†	12	5.0	1.0Ø	4.0						B8b	ML30
16	UA2596D4#3	2048	2	SC	MXX	900n	600mØ	20	0.0	.80♦	2.7	1.6m	.40	5	C		B9c	DL24ay
17	UA2596D8#3	2048	2	SC	MXX	900n	600mØ	20	0.0	.80♦	2.7	1.6m	.40	5	C		B9c	DL28b
18	UA3596D4#3	2048	2	SC	MXX	900n	600mØ	20	0.0	.80♦	2.7	1.6m	.40	2	7		B9c	DL24ay
19	UA3596D8#3	2048	2	SC	MXX	900n	600mØ	20	0.0	.80♦	2.7	1.6m	.40	2	7		B9c	DL28b
20	TMS4300JC#3	2048	2	SC	MXX	2.0u	250m†	12	12	-3.0	-9.0	2.0m	-2.0	2	8		B58b	ML47b
21	S8865	2048	4	DC	MPI	700n	611m♦	12	5.0	.90	3.5			0	6	fc10k	B110	ML13b
22	RO1-8192	2048	4	DC	MPN	1.5u	375m†	12	5.0	.75	3.25	2.2m	1.5	0	7			
23	RO5-8192	2048	4	DS	MPN	1.6u	400m	12	5.0	.80	3.5	1.6m	.50	0	7	Random No.Gen	B234	DL24cr
24	NCR2811	2048	4	E	MPM	2.0u		0.0	5.0	0.6	3.5			0	6	CS	B555	DL24Ø
25	TBP24S81MJ#ai	2048	4	S	BTD	70n	625m†	0.0	5.0	0.8	2.0§	16m#	0.5	5	C	PROM		DLØ
26	N82S185BI	2048	4	SC	BXX	45n			7.0	0.85	2.0§	16m	0.45	0	7	PROM	B213	DL18Ø
27	N82S185AI	2048	4	SC	BXX	50n			7.0	0.85	2.0§	16m	0.45	0	7	PROM	B213	DL18Ø
28	S82S185AR	2048	4	SC	BXX	80n			7.0	0.80	2.0§	16m	0.50	5	C	PROM	B213	FL18Ø
29	NC6560AL#2	2048	4	SC	MNA	290n	925m	5.0	12	.80	3.0§	1.6m	.40	0	7		B121a	DL24q
30	NC6560AP#2	2048	4	SC	MNA	290n	925m	5.0	12	.80	3.0§	1.6m	.40	0	7		B121a	DL24q
31	NC6560L#2	2048	4	SC	MNA	350n	925m	3.0	12	.80	3.0§	1.6m	.40	0	7		B121a	DL24q
32	NC6560P#2	2048	4	SC	MNA	350n	925m	3.0	12	.80	3.0§	1.6m	.40	0	7		B121a	DL24q
33	MCM6560L#2	2048	4	SC	MNX	350n	1.0	3.0	12	.80	4.0§	1.6m	.40	0	7		B121a	DL24d
34	MCM6560P#2	2048	4	SC	MNX	350n	1.0	3.0	12	.80	4.0§	1.6m	.40	0	7		B121a	DL24br
35	NCM6560BL	2048	4	SC	MNX	350n	600m†	3.0	12	.80	3.0§	1.6m	.40	0	7		B121a	DL24ef
36	NCM6560BP	2048	4	SC	MNX	350n	600m†	3.0	12	.80	3.0§	1.6m	.40	0	7		B121a	DL24ef
37	2580I	2048	4	SC	MPG	625n	730mØ	12	5.0	.60	3.4§	1.6m	.50	0	7		B111	DL24ab
38	2580N	2048	4	SC	MPG	625n	730mØ	12	5.0	.60	3.4§	1.6m	.50	0	7		B111	DL24ar
39	R01492C	2048	4	SC	MXG	450n	391m	12	5.0	.80	3.25	1.6m	.40	0	6		B136	ML47b
40	53RA841J	2048	4	SE	BTD	35n	650m†	0.0	5.0	.80	2.0	16m	.50	5	C	PROM;Reg	B331	DLØ
41	53RA841N	2048	4	SE	BTD	35n	650m†	0.0	5.0	.80	2.0	16m	.50	5	C	PROM;Reg	B331	DLØ
42	53RS841J	2048	4	SE	BTD	35n	650m†	0.0	5.0	.80	2.0	16m	.50	5	C	PROM;Reg	B335	DLØ
43	53RS841N	2048	4	SE	BTD	35n	650m†	0.0	5.0	.80	2.0	16m	.50	5	C	PROM;Reg	B335	DLØ
44	63RA841J	2048	4	SE	BTD	35n	650m†	0.0	5.0	.80	2.0	24m	.50	0	7	PROM;Reg	B331	DLØ
45	63RA841N	2048	4	SE	BTD	35n	650m†	0.0	5.0	.80	2.0	24m	.50	0	7	PROM;Reg	B331	DLØ
46	63RS841J	2048	4	SE	BTD	35n	650m†	0.0	5.0	.80	2.0	24m	.50	0	7	PROM;Reg	B335	DLØ
47	63RS841N	2048	4	SE	BTD	35n	650m†	0.0	5.0	.80	2.0	24m	.50	0	7	PROM;Reg	B335	DLØ
48	53PS840F	2048	4	SE	BTD	39n	550m†	0.0	5.0	.80	2.0△	16m	.50	5	C	PROM;Pwr Sw	PN18ba	FLØ
49	53PS840J	2048	4	SE	BTD	39n	550m†	0.0	5.0	.80	2.0△	16m	.50	5	C	PROM;Pwr Sw	PN18ba	DL18q
50	53PS840N	2048	4	SE	BTD	39n	550m†	0.0	5.0	.80	2.0△	16m	.50	5	C	PROM;Pwr Sw	PN18ba	DL18bd
51	53PS841F	2048	4	SE	BTD	39n	550m†	0.0	5.0	.80	2.0§	16m	.50	5	C	PROM;Pwr Sw	PN18ba	FLØ
52	53PS841J	2048	4	SE	BTD	39n	550m†	0.0	5.0	.80	2.0§	16m	.50	5	C	PROM;Pwr Sw	PN18ba	DL18q
53	53PS841N	2048	4	SE	BTD	39n	550m†	0.0	5.0	.80	2.0§	16m	.50	5	C	PROM;Pwr Sw	PN18ba	DL18bd
54	63PS840F	2048	4	SE	BTD	39n	550m†	0.0	5.0	.80	2.0△	16m	.45	0	7	PROM;Pwr Sw	PN18ba	FLØ
55	63PS840J	2048	4	SE	BTD	39n	550m†	0.0	5.0	.80	2.0△	16m	.45	0	7	PROM;Pwr Sw	PN18ba	DL18q
56	63PS840N	2048	4	SE	BTD	39n	550m†	0.0	5.0	.80	2.0△	16m	.45	0	7	PROM;Pwr Sw	PN18ba	DL18bd
57	63PS841F	2048	4	SE	BTD	39n	550m†	0.0	5.0	.80	2.0§	16m	.45	0	7	PROM;Pwr Sw	PN18ba	FLØ
58	63PS841J	2048	4	SE	BTD	39n	550m†	0.0	5.0	.80	2.0§	16m	.45	0	7	PROM;Pwr Sw	PN18ba	DL18q
59	63PS841N	2048	4	SE	BTD	39n	550m†	0.0	5.0	.80	2.0§	16m	.45	0	7	PROM;Pwr Sw	PN18ba	DL18bd
60	SN54S454J	2048	4	SE	BTD	45n	625m	0.0	5.0	.80	2.0§	16m	.50	5	C	PROM	PN18ba	DL18b
61	SN54S455J	2048	4	SE	BTD	45n	625m	0.0	5.0	.80	2.0△	16m	.50	5	C	PROM	PN18ba	DL18b
62	SN74S454J	2048	4	SE	BTD	45n	625m	0.0	5.0	.80	2.0§	16m	.50	0	7	PROM	PN18ba	DL18b
63	SN74S454N	2048	4	SE	BTD	45n	625m	0.0	5.0	.80	2.0§	16m	.50	0	7	PROM	PN18ba	DL18f
64	SN74S455J	2048	4	SE	BTD	45n	625m	0.0	5.0	.80	2.0△	16m	.50	0	7	PROM	PN18ba	DL18b
65	63S840F	2048	4	SE	BTD	60n	850m	0.0	5.0	.80	2.0△	16m	.45	0	7	PROM	PN18ba	FLØ
66	63S840J	2048	4	SE	BTD	60n	850m	0.0	5.0	.80	2.0△	16m	.45	0	7	PROM	PN18ba	DL18q
67	63S840N	2048	4	SE	BTD	60n	850m	0.0	5.0	.80	2.0△	16m	.45	0	7	PROM	PN18ba	DL18bd
68	63S841F	2048	4	SE	BTD	60n	850m	0.0	5.0	.80	2.0§	16m	.45	0	7	PROM	PN18ba	FLØ
69	63S841J	2048	4	SE	BTD	60n	850m	0.0	5.0	.80	2.0§	16m	.45	0	7	PROM	PN18ba	DL18q
70	63S841N	2048	4	SE	BTD	60n	850m	0.0	5.0	.80	2.0§	16m	.45	0	7	PROM	PN18ba	DL18bd
71	HM1-7686-5	2048	4	SE	BTD	60n	850m	0.0	5.0	.80	2.0△	16m	.50	0	7	PROM	B394	ML308
72	HM1-7686P5	2048	4	SE	BTD	60n	850m	0.0	5.0	.80	2.0△	16m	.50	0	7	PROM,Pwr Sw	B394b	ML308
73	HM1-7686RP5	2048	4	SE	BTD	60n	850m	0.0	5.0	.80	2.0△	16m	.50	0	7	PROM,Latch/PD	B394c	ML308
74	HM1-7686R5	2048	4	SE	BTD	60n	850m	0.0	5.0	.80	2.0△	16m	.50	0	7	PROM,Latched	B394a	ML308
75	HM1-7687-5	2048	4	SE	BTD	60n	850m	0.0	5.0	.80	2.0§	16m	.50	0	7	PROM	B394	ML308
76	HM1-7687P5	2048	4	SE	BTD	60n	850m	0.0	5.0	.80	2.0§	16m	.50	0	7	PROM,Pwr Sw	B394b	ML308
77	HM1-7687RP5	2048	4	SE	BTD	60n	850m	0.0	5.0	.80	2.0§	16m	.50	0	7	PROM,Latch/PD	B394c	ML308
78	HM1-7687R5	2048	4	SE	BTD	60n	850m	0.0	5.0	.80	2.0§	16m	.50	0	7	PROM,Latched	B394a	ML308
79	HM9-7684P5	2048	4	SE	BTD	60n	850m	0.0	5.0	.80	2.0△	16m	.50	0	7	PROM,Pwr Sw	B393a	FL53
80	HM9-7686-5	2048	4	SE	BTD	60n	850m	0.0	5.0	.80	2.0△	16m	.50	0	7	PROM	B394	FL56
81	HM9-7686P5	2048	4	SE	BTD	60n	850m	0.0	5.0	.80	2.0△	16m	.50	0	7	PROM,Pwr Sw	B394b	FL56
82	HM9-7686RP5	2048	4	SE	BTD	60n	850m	0.0	5.0	.80	2.0△	16m	.50	0	7	PROM,Latch/PD	B394c	FL56
83	HM9-7686R5	2048	4	SE	BTD	60n	850m	0.0	5.0	.80	2.0△	16m	.50	0	7	PROM,Latched	B394a	FL56
84	HM9-7687-5	2048	4	SE	BTD	60n	850m	0.0	5.0	.80	2.0§	16m	.50	0	7	PROM	B394	FL56
85	HM9-7687P5	2048	4	SE	BTD	60n	850m	0.0	5.0	.80	2.0§	16m	.50	0	7	PROM,Pwr Sw	B394b	FL56
86	HM9-7687RP5	2048	4	SE	BTD	60n	850m	0.0	5.0	.80	2.0§	16m	.50	0	7	PROM,Latch/PD	B394c	FL56
87	HM9-7687R5	2048	4	SE	BTD	60n	850m	0.0	5.0	.80	2.0§	16m	.50	0	7	PROM,Latched	B394a	FL56
88	53LS840F	2048	4	SE	BTD	62n	425m	0.0	5.0	.80	2.0△	12m	.50	5	C	PROM	PN18ba	FLØ
89	53LS840J	2048	4	SE	BTD	62n	425m	0.0	5.0	.80	2.0△	12m	.50	5	C	PROM	PN18ba	DL18q
90	53LS840N	2048	4	SE	BTD	62n	425m	0.0	5.0	.80	2.0△	12m	.50	5	C	PROM	PN18ba	DL18bd
91	53LS841F	2048	4	SE	BTD	62n	425m	0.0	5.0	.80	2.0§	12m	.50	5	C	PROM	PN18ba	FLØ
92	53LS841J	2048	4	SE	BTD	62n	425m	0.0	5.0	.80	2.0§	12m	.50	5	C	PROM	PN18ba	DL18q
93	53LS841N	2048	4	SE	BTD	62n	425m	0.0	5.0	.80	2.0§	12m	.50	5	C	PROM	PN18ba	DL18bd
94	63LS840F	2048	4	SE	BTD	62n	425m	0.0	5.0	.80	2.0△	16m	.45	0	7	PROM	PN18ba	FLØ
95	63LS840J	2048	4	SE	BTD	62n	425m	0.0	5.0	.80	2.0△	16m	.45	0	7	PROM	PN18ba	DL18q
96	63LS840N	2048	4	SE	BTD	62n	425m	0.0	5.0	.80	2.0△	16m	.45	0	7	PROM	PN18ba	DL18bd
97	63LS841F	2048	4	SE	BTD	62n	425m	0.0	5.0	.80	2.0§	16m	.45	0	7	PROM	PN18ba	FLØ
98	63LS841J	2048	4	SE	BTD	62n	425m	0.0	5.0	.80	2.0§	16m	.45	0	7	PROM	PN18ba	DL18q
99	63LS841N	2048	4	SE	BTD	62n	425m	0.0	5.0	.80	2.0§	16m	.45	0	7	PROM	PN18ba	DL18bd
100	53S840F	2048	4	SE	BTD	70n	850m	0.0	5.0	.80	2.0△	16m	.50	5	C	PROM	PN18ba	FLØ
101	53S840J	2048	4	SE	BTD	70n	850m	0.0	5.0	.80	2.0△	16m	.50	5	C	PROM	PN18ba	DL18q
102	53S840N	2048	4	SE	BTD	70n	850m	0.0	5.0	.80	2.0△	16m	.50	5	C	PROM	PN18ba	DL18bd
103	53S841F	2048	4	SE	BTD	70n	850m	0.0	5.0	.80	2.0§	16m	.50	5	C	PROM	PN18ba	FLØ
104	53S841J	2048	4	SE	BTD	70n	850m	0.0	5.0	.80	2.0§	16m	.50	5	C	PROM	PN18ba	DL18q
105	53S841N	2048	4	SE	BTD	70n	850m	0.0	5.0	.80	2.0§	16m	.50	5	C	PROM	PN18ba	DL18bd
106	29650DC	2048	4	SE	BTD	75n	850mØ	0.0	5.0	.80	2.0△	16m	.50	0	7	PROM	B397	DLØ
107	29652DC	2048	4	SE	BTD	80n	850mØ	0.0	5.0	.80	2.0△	16m	.50	0	7	PROM;Pwr Sw	B397	DLØ
108	HM1-7686-2	2048	4	SE	BTD	80n	850m	0.0	5.0	.80	2.0△	16m	.50	5	C	PROM	B394	ML308

SYMBOLS AND CODES EXPLAINED IN INTERPRETER

3. READ ONLY MEMORIES (ROMS)

IN ORDER OF (1)No.WDS(2)No.BITS/WD(3)OP.MODE PRG.CODE(4)STRUCT.(5)MAX ACC.TIME(6)TYPE No.

MEMORY

LINE No.	6 TYPE NUMBER	ORGANIZATION 1 NO. WORDS	2 BITS PER WORD	3 OP MODE PROG CODE	4 STRUC-TURE CODE	5 MAX. ACCESS TIME (S)	MAX. POWER DISS. (W)	POWER SUPPLY SPAN NEG. (V)	POS. (V)	INPUT LOGIC LEVELS MAX. '0' (V)	MIN. '1' (V)	MIN.OUTPUT SINK CURRENT (A)	@ OUT (V)	OPER TEMP RNGE CODE -	+	GENERAL DESCRIPTION	DRAWINGS FUNCTIONAL EQUIVALENT NUMBER	OUTLINE
1	HM1-7686P2	2048	4	SE	BTD	80n	850m	0.0	5.0	.80	2.0Δ	16m	.50	5	C	PROM,Pwr Sw	B394b	ML308
2	HM1-7686RP2	2048	4	SE	BTD	80n	850m	0.0	5.0	.80	2.0Δ	16m	.50	5	C	PROM,Latch/PD	B394c	ML308
3	HM1-7686R2	2048	4	SE	BTD	80n	850m	0.0	5.0	.80	2.0Δ	16m	.50	5	C	PROM,Latched	B394a	ML308
4	HM1-7687-2	2048	4	SE	BTD	80n	850m	0.0	5.0	.80	2.0§	16m	.50	5	C	PROM	B394	ML308
5	HM1-7687P2	2048	4	SE	BTD	80n	850m	0.0	5.0	.80	2.0§	16m	.50	5	C	PROM,Pwr Sw	B394b	ML308
6	HM1-7687RP2	2048	4	SE	BTD	80n	850m	0.0	5.0	.80	2.0§	16m	.50	5	C	PROM,Latch/PD	B394c	ML308
7	HM1-7687R2	2048	4	SE	BTD	80n	850m	0.0	5.0	.80	2.0§	16m	.50	5	C	PROM,Latched	B394a	ML308
8	HM9-7686-2	2048	4	SE	BTD	80n	850m	0.0	5.0	.80	2.0Δ	16m	.50	5	C	PROM	B394	FL56
9	HM9-7686P2	2048	4	SE	BTD	80n	850m	0.0	5.0	.80	2.0Δ	16m	.50	5	C	PROM,Pwr Sw	B394b	FL56
10	HM9-7686RP2	2048	4	SE	BTD	80n	850m	0.0	5.0	.80	2.0Δ	16m	.50	5	C	PROM,Latch/PD	B394c	FL56
11	HM9-7686R2	2048	4	SE	BTD	80n	850m	0.0	5.0	.80	2.0Δ	16m	.50	5	C	PROM,Latched	B394a	FL56
12	HM9-7687-2	2048	4	SE	BTD	80n	850m	0.0	5.0	.80	2.0§	16m	.50	5	C	PROM	B394	FL56
13	HM9-7687P2	2048	4	SE	BTD	80n	850m	0.0	5.0	.80	2.0§	16m	.50	5	C	PROM,Pwr Sw	B394b	FL56
14	HM9-7687RP2	2048	4	SE	BTD	80n	850m	0.0	5.0	.80	2.0§	16m	.50	5	C	PROM,Latch/PD	B394c	FL56
15	HM9-7687R2	2048	4	SE	BTD	80n	850m	0.0	5.0	.80	2.0§	16m	.50	5	C	PROM,Latched	B394a	FL56
16	29650DM	2048	4	SE	BTD	95n	850mØ	0.0	5.0	.80	2.0Δ	16m	.50	5	C	PROM	B397	DLØ
17	29652DM	2048	4	SE	BTD	100n	850mØ	0.0	5.0	.80	2.0Δ	16m	.50	5	C	PROM;Pwr Sw	B397	DLØ
18	S82S184I	2048	4	SE	BTD	125n	650m	0.0	5.0	.80	2.0Δ	16m	.50	5	C	PROM	B213	DL18bq
19	DM87S186J	2048	4	SE	BTX	60n	700m	0.0	5.0	.80	2.0	16m	.45	0	7	PROM	B267a	DLØ
20	DM87S186N	2048	4	SE	BTX	60n	700m	0.0	5.0	.80	2.0	16m	.45	0	7	PROM	B267a	DLØ
21	DM87S187J	2048	4	SE	BTX	60n	700m	0.0	5.0	.80	2.0§	16m	.45	0	7	PROM	B267a	DLØ
22	DM87S187N	2048	4	SE	BTX	60n	700m	0.0	5.0	.80	2.0§	16m	.45	0	7	PROM	B267a	DLØ
23	DM77S186J	2048	4	SE	BTX	75n	700m	0.0	5.0	.80	2.0	16m	.50	5	C	PROM	B267a	DLØ
24	DM77S187J	2048	4	SE	BTX	75n	700m	0.0	5.0	.80	2.0§	16m	.50	5	C	PROM	B267a	DLØ
25	RC82S184F	2048	4	SE	BTX	150m	835mØ	0.0	5.2	.80	2.4			5	C	Fld Prog	B213	DL18az
26	RC82S185F	2048	4	SE	BTX	150m	835mØ	0.0	5.2	.80	2.4			5	C	Fld Prog	B213	DL18az
27	ER2800	2048	4	SE	MPN	2.0u	575m	14	5.0	.60	3.5§	3.2m		0	7	EAROM	B239	DL24ck
28	ER2805	2048	4	SE	MXX	1.6u	700m	23	5.0	.60	3.5§			0	7	EAROM	B239	DL24cr
29	M5L2716K-65	2048	8			650n	525m	0.0	5.0	.80	2.0	2.1m	.45	0	7			
30	RC82S290N	2048	8		BTX	80n	900m	0.0	5.0	.80	2.0Δ	9.6m	.50	5	C	ROM	B306	DL24ar
31	RC82S291N	2048	8		BTX	80n	900m	0.0	5.0	.80	2.0§	9.6m	.50	5	C	ROM	B306	DL24ar
32	RC82S290F	2048	8		BTX	100n	900m	0.0	5.0	.80	2.0Δ	9.6m	.50	5	C	ROM	B306	DL24cb
33	RC82S291F	2048	8		BTX	100n	900m	0.0	5.0	.80	2.0§	9.6m	.50	5	C	ROM	B306	DL24cb
34	G5316D3	2048	8		MCX	300n		0.0	5.0	0.8	2.0§	2.1m	0.4	0	7	ROM	PN24p	DL24s
35	G5316P3	2048	8		MCX	300n		0.0	5.0	0.8	2.0§	2.1m	0.4	0	7	ROM	PN24p	DL24s
36	TMM323D-1	2048	8		MNG	350n	550m	0.0	5.0	0.8	2.0	2.1m	0.45	0	7			DL24dz
37	TMM323DI1	2048	8		MNG	350n	660m	0.0	5.0	.80	2.2	2.1m	.45	4	8			DL24dz
38	TMM323D	2048	8		MNG	450n	525m	0.0	5.0	0.8	2.0	2.1m	0.45	0	7		B481	DL24dz
39	TMM323DI	2048	8		MNG	450n	525m	0.0	5.0	.80	2.2	2.1m	.45	4	8			DL24dz
40	M58733S	2048	8		MXX	450n		5.0	12	.65	3.0	1.6m	.45	0	7	Fld Prog		
41	M58733S-1	2048	8		MXX	650n		5.0	12	.65	3.0	1.6m	.45	0	7	Fld Prog		
42	MK28000P#1	2048	8	DC	MPI	600n	340m♦	12	5.0	.80	-1.5	10u#Δ		0	7		B94	DL24dd
43	MCS2026	2048	8	DC	MPX	450n	500m†	12	5.0	.80	3.5	1.6m	.40	2	8		B124	DLØ
44	NCR2168	2048	8	E	MNM			12	5.0	0.8	3.2	0.5m	.6	0	7	EAROM	B554	DLØ
45	NCR2161	2048	8	E	MPM			-29	5.0	0.8	3.5			0	6	CS	B553	DLØ
46	CM1600-3C	2048	8	S	MCX	1.5u	120m	0.0	5.0	.65	2.0	2.1m	.40	0	7			
47	CM1600-3P	2048	8	S	MCX	1.5u	120m	0.0	5.0	.65	2.0	2.1m	.40	0	7			
48	MCM27A16C	2048	8	S	MNG	350n	500m	0.0	5.0	.80	2.0	10uΔ	5.2	1	7	UV Erase PROM	B289	DL24m
49	MCM27A16L	2048	8	S	MNG	350n	500m	0.0	5.0	.80	2.0	10uΔ	5.2	1	7	UV Erase PROM	B289	DL24dq
50	ROM2316E#ai	2048	8	S	MNG	450n		0.0	5.0	0.65	2.0§	2.0m	0.4	0	7	ROM	B182a	DL24fc
51	EA2716	2048	8	S	MNX	450n	525m	0.0	5.0	0.8	2.2	2.1m		1	7	EPROM	B432	DL24bg
52	MBC6831B	2048	8	S	MNX	450n	440m	4.55	5.5	0.8	2.0	2.1m	0.4	5	C			
53	R2316BC	2048	8	S	MTX	450n	325m	0.0	5.0	0.8	2.0§	10uΔ	5.5	0	7	CS OR-tied	B182a	DL24dr
54	R2316EC	2048	8	S	MTX	450n	325m	0.0	5.0	0.8	2.0§	10uΔ	5.5	0	7	CS OR-tied	B182a	DL24dr
55	R2316BMT	2048	8	S	MTX	550n	400m	0.0	5.0	0.8	2.0§	10uΔ	5.5	5	C	CS OR-tied	B182a	DL24dr
56	R2316EMT	2048	8	S	MTX	550n	400m	0.0	5.0	0.8	2.0§	10uΔ	5.5	5	C	CS OR-tied	B182a	DL24dr
57	SYC2316B-3	2048	8	SC		300n	1.0 Ø	0.0	5.0	.80	2.0§	2.1m	.40	0	7	ROM	B182a	DL24dk
58	SYC2316B	2048	8	SC		450n	1.0 Ø	0.0	5.0	.80	2.0§	2.1m	.40	0	7	PROM	B182a	DL24dk
59	SYC2316A	2048	8	SC		550n	1.0 Ø	0.0	5.0	.80	2.0§	2.1m	.40	0	7	PROM	B182	DL24dk
60	SYP2316A	2048	8	SC		550n	1.0 Ø	0.0	5.0	.80	2.0§	2.1m	.40	0	7	PROM	B182	DL24aj
61	6275-1F	2048	8	SC	BTD	110n	950m	0.0	5.0	.80	2.0Δ	10m	.50	0	7	ROM	PN24ef	FL50
62	6275-1N	2048	8	SC	BTD	110n	950m	0.0	5.0	.80	2.0Δ	10m	.50	0	7	ROM	PN24ef	DL24co
63	6275D	2048	8	SC	BTD	110n	850m♦	0.0	5.0	8.0	2.0Δ	10m	.50	0	7		B223	ML207d
64	6275J	2048	8	SC	BTD	110n	850m♦	0.0	5.0	.80	2.0Δ	10m	.50	0	7		B223	DL24cm
65	6276-1F	2048	8	SC	BTD	110n	950m	0.0	5.0	.80	2.0§	10m	.50	0	7	ROM	PN24ef	FL50
66	6276-1N	2048	8	SC	BTD	110n	950m	0.0	5.0	.80	2.0§	10m	.50	0	7	ROM	PN24ef	DL24co
67	6276D	2048	8	SC	BTD	110n	850m♦	0.0	5.0	8.0	2.0§	10m	.50	0	7		B223	ML207d
68	6276J	2048	8	SC	BTD	110n	850m♦	0.0	5.0	.80	2.0§	10m	.50	0	7		B223	DL24cm
69	5275-1F	2048	8	SC	BTD	120n	950m	0.0	5.0	.80	2.0Δ	8.0m	.50	5	C	ROM	PN24ef	FL50
70	5275-1N	2048	8	SC	BTD	120n	950m	0.0	5.0	.80	2.0Δ	8.0m	.50	5	C	ROM	PN24ef	DL24co
71	5275D	2048	8	SC	BTD	120n	850m♦	0.0	5.0	.80	2.0Δ	8.0m	.50	5	C		B223	ML207d
72	5275J	2048	8	SC	BTD	120n	850m♦	0.0	5.0	8.0	2.0Δ	8.0m	.50	5	C		B223	DL24cm
73	5276-1F	2048	8	SC	BTD	120n	950m	0.0	5.0	.80	2.0§	8.0m	.50	5	C	ROM	PN24ef	FL50
74	5276-1N	2048	8	SC	BTD	120n	950m	0.0	5.0	.80	2.0§	8.0m	.50	5	C	ROM	PN24ef	DL24co
75	5276D	2048	8	SC	BTD	120n	850m♦	0.0	5.0	.80	2.0§	8.0m	.50	5	C		B223	ML207d
76	5276J	2048	8	SC	BTD	120n	850m♦	0.0	5.0	8.0	2.0§	8.0m	.50	5	C		B223	DL24cm
77	S82S290N	2048	8	SC	BTX	80n	900m	0.0	5.0	.80	2.0Δ	9.6m	.50	5	C	ROM	B306	DL24ar
78	RC82S191N	2048	8	SC	BTX	100n	925m	0.0	5.0	.85	2.0§	9.6m	.50	5	C	PROM	B305	DL24ar
79	DM8531D	2048	8	SC	BTX	300n	575m†	0.0	5.0	.80	2.0§	6.0m	.40	0	7		B169	ML184
80	DM8531J	2048	8	SC	BTX	450n	800m	0.0	5.0	.80	2.0§	6.0m	.45	0	7		B169	ML183a
81	DM8531N	2048	8	SC	BTX	450n	800m	0.0	5.0	.80	2.0§	6.0m	.45	0	7		B169	DL24au
82	SYD2316A	2048	8	SC	BTX	550n	1.0 Ø	0.0	5.0	0.8	2.0§	2.1m	0.4	0	7	ROM	B182	DL24cw
83	N82S191AI	2048	8	SC	BXX	60n			7.0	0.85	2.0§	9.6m	0.45	0	7	PROM	B305	DL18Ø
84	S82S191AI	2048	8	SC	BXX	80n			7.0	0.80	2.0§	9.6m	0.50	5	C	PROM	B305	DL18Ø
85	SCM5316	2048	8	SC	MCG		500m	0.0	5.0	.40	.40	1.0uΔ		5	C	PR	B460	DLØ
86	TA10906D	2048	8	SC	MCX	150n	500mØ	0.0	10	1.5	3.5§	3.6m	.50	5	C	ROM	B513	DL24er
87	TA10906E	2048	8	SC	MCX	150n	500mØ	0.0	10	1.5	3.5§	3.6m	.50	4	8	ROM	B513	MO015AA
88	G5316D3#ai	2048	8	SC	MCX	300n		0.0	5.0	0.8	2.0§	2.1m	0.4	0	7	ROM	B460	DL24s
89	G5316P3#ai	2048	8	SC	MCX	300n		0.0	5.0	0.8	2.0§	2.1m	0.4	0	7	ROM	B460	DL24s
90	TA10736D	2048	8	SC	MCX	300n	500mØ	0.0	5.0	.80	2.4	1.8m	.40	4	8	ROM	B78c	MO015AA
91	TA10906CD	2048	8	SC	MCX	300n	500mØ	0.0	5.0	1.5	3.5§	1.8m	.40	5	C	ROM	B513	DL24er
92	TA10906CE	2048	8	SC	MCX	300n	500mØ	0.0	5.0	1.5	3.5§	1.8m	.40	4	8	ROM	B513	MO015AA
93	CM1600-1C	2048	8	SC	MCX	450n	1.0 Ø	0.0	5.2	.65	2.0§	2.1m	.40	0	7		B494	DL24eg
94	CM1600-1P	2048	8	SC	MCX	450n	1.0 Ø	0.0	5.2	.65	2.0§	2.1m	.40	0	7		B494	DL24eh
95	NC6590AL	2048	8	SC	MNA	475n	405m	5.0	12	.80	3.0§	1.6m	.40	0	7		B144	DL24q
96	NC6590AP	2048	8	SC	MNA	475n	405m	5.0	12	.80	3.0§	1.6m	.40	0	7		B144	DL24q
97	EA4600C#1	2048	8	SC	MNA	550n	800m	0.0	5.0	.40%	2.4	1.6m	.40	0	7		B94a	DL24as
98	EA4600C#2	2048	8	SC	MNA	550n	1.2	0.0	5.0	.40%	2.4	1.6m	.40	0	7		B94a	DL24ch
99	EA4600M#1	2048	8	SC	MNA	750n	800m	0.0	5.0	.40%	2.4	1.6m	.40	5	C		B94a	DL24as
100	EA4600M#2	2048	8	SC	MNA	750n	1.2	0.0	5.0	.40%	2.4	1.6m	.40	5	C		B94a	DL24ch
101	EA4600C1#1	2048	8	SC	MNA	800n	800m	0.0	5.0	.40%	2.4	1.6m	.40	0	7		B94a	DL24as
102	EA4600C1#2	2048	8	SC	MNA	800n	1.2	0.0	5.0	.40%	2.4	1.6m	.40	0	7		B94a	DL24ch
103	NC6590L	2048	8	SC	MNA	800n	405m	5.0	12	.80	3.0§	1.6m	.40	0	7		B144	DL24q
104	NC6590P	2048	8	SC	MNA	800n	405m	5.0	12	.80	3.0§	1.6m	.40	0	7		B144	DL24q
105	2600-1F	2048	8	SC	MNG	300n	575m	0.0	5.0	.80	2.2§	1.6m	.40	0	7	ROM	B94	DL24ch
106	2600-1I	2048	8	SC	MNG	300n	575m	0.0	5.0	.80	2.2§	1.6m	.40	0	7	ROM	B94	DL24dk
107	2600-1N	2048	8	SC	MNG	300n	575m	0.0	5.0	.80	2.2§	1.6m	.40	0	7	ROM	B94	DL24ar
108	AM9216CDC	2048	8	SC	MNG	300n	1.0 Ø	0.0	12	.80	2.4§	3.2m	.40	0	7		B442	DL24eu
109	2616-1F	2048	8	SC	MNG	350n	575m	0.0	5.0	.80	2.2§	1.6m	.40	0	7	CS ROM	B302	DL24ch
110	2616-1I	2048	8	SC	MNG	350n	575m	0.0	5.0	.80	2.2§	1.6m	.40	0	7	CS ROM	B302	DL24dk

SYMBOLS AND CODES EXPLAINED IN INTERPRETER

3. READ ONLY MEMORIES (ROMS)

IN ORDER OF (1)No.WDS(2)No.BITS/WD(3)OP.MODE
PRG.CODE(4)STRUCT.(5)MAX ACC.TIME(6)TYPE No.

LINE No.	6 TYPE NUMBER	ORGANIZATION 1 NO. WORDS	2 BITS PER WORD	3 OP MODE PROG CODE	4 STRUC-TURE CODE	5 MAX. ACCESS TIME (S)	MAX. POWER DISS. (W)	POWER SUPPLY SPAN NEG. (V)	POS. (V)	INPUT LOGIC LEVELS MAX. '0' (V)	MIN. '1' (V)	MIN.OUTPUT SINK CURRENT (A)	@ OUT (V)	OPER TEMP RNGE CODE -	+	GENERAL DESCRIPTION	DRAWINGS FUNCTIONAL EQUIVALENT NUMBER	OUTLINE
1	2616-1N	2048	8	SC	MNG	350n	575m	0.0	5.0	.80	2.2§	1.6m	.40	0	7	CS ROM	B302	DL24ar
2	2617-1F	2048	8	SC	MNG	350n	575m	0.0	5.0	.80	2.2§	1.6m	.40	0	7	CS ROM	B78d	DL24ch
3	2617-1I	2048	8	SC	MNG	350n	575m	0.0	5.0	.80	2.2§	1.6m	.40	0	7	CS ROM	B78d	DL24dk
4	2617-1N	2048	8	SC	MNG	350n	575m	0.0	5.0	.80	2.2§	1.6m	.40	0	7	CS ROM	B78d	DL24ar
5	AM9216BDC	2048	8	SC	MNG	400n	1.0 ∅	0.0	12	.80	2.4§	3.2m	.40	0	7		B442	DL24eu
6	AM9216BDM	2048	8	SC	MNG	400n	1.0 ∅	0.0	12	.80	2.6§	3.2m	.40	5	C		B442	DL24eu
7	MCM65516-43	2048	8	SC	MNG	430n	30m	0.0	5.0	.80	3.0	1.6m	.40	0	7		PN18cc	DL18ai
8	2616I	2048	8	SC	MNG	450n	575m	0.0	5.0	.80	2.2§	1.6m	.40	0	7	CS ROM	B302	DL24dk
9	2617I	2048	8	SC	MNG	450n	575m	0.0	5.0	.80	2.2§	1.6m	.40	0	7	CS ROM	B78d	DL24dk
10	AM9217BDC	2048	8	SC	MNG	450n	1.0 ∅	0.0	5.0	.80	2.0§	3.2m	.40	0	7			DL24eu
11	AM9217BDM	2048	8	SC	MNG	450n	1.0 ∅	0.0	5.0	.80	2.0§	3.2m	.45	5	C			DL24eu
12	MM2316EJ	2048	8	SC	MNG	450n	490m	0.0	5.0	.80	2.0§	2.0m	.45	0	7	ROM	B182a	ML183a
13	S6831	2048	8	SC	MNG	450n	150m†	0.0	5.0	.80	2.0§	2.1m	.40	0	7		B254	DL24bm
14	S6831A	2048	8	SC	MNG	450n	150m†	0.0	5.0	.80	2.0§	2.1m	.40	0	7		A462	DL24bm
15	S6831B	2048	8	SC	MNG	450n	400m	0.0	5.0	.80	2.0§	2.1m	.40	0	7	ROM	A462a	DL24bm
16	S6831BC	2048	8	SC	MNG	450n	1.0	0.0	5.0	0.8	2.0			0	6	CS	A462	DL24ge
17	S6831BCI	2048	8	SC	MNG	450n	1.0	0.0	5.0	0.8	2.0			3	8	CS	A462	DL24ge
18	S6831BD	2048	8	SC	MNG	450n	1.0	0.0	5.0	0.8	2.0			0	6	CS	A462	DL24gd
19	S6831BDI	2048	8	SC	MNG	450n	1.0	0.0	5.0	0.8	2.0			3	8	CS	A462	DL24gd
20	S6831BP	2048	8	SC	MNG	450n	1.0	0.0	5.0	0.8	2.0			0	6	CS	A462	DL24gc
21	S6831BPI	2048	8	SC	MNG	450n	1.0	0.0	5.0	0.8	2.0			3	8	CS	A462	DL24gc
22	S6831C	2048	8	SC	MNG	450n	150m†	0.0	5.0	.80	2.0§	2.1m	.40	0	7		B254c	DL24bm
23	uPD2716	2048	8	SC	MNG	450n		0.0	5.0							EPROM	PN24id	
24	uPD466D001	2048	8	SC	MNG	475n	416m♦	5.0	12	.80	3.0§	1.7m	.50	0	7		PN28g	DL28k
25	MCM65317L	2048	8	SC	MNG	500n	527m	5.0	12	0.8	3.0§			0	6		B453	DL24dk
26	MCM65317P	2048	8	SC	MNG	500n	527m	5.0	12	0.8	3.0§			0	6		B453	DL24cb
27	MCM68316E1L	2048	8	SC	MNG	500n		0.0	5.0	.80	2.0§	10uΔ	.40	4	8	PROM	B291	DL24do
28	MCM68316E1P	2048	8	SC	MNG	500n		0.0	5.0	.80	2.0§	10uΔ	.40	4	8	PROM	B291	DL24cb
29	MCM68316EL	2048	8	SC	MNG	500n	650m	0.0	5.0	0.8	2.0§			0	6		B291a	DL24dk
30	MCM68316EP	2048	8	SC	MNG	500n	650m	0.0	5.0	0.8	2.0§			0	6		B291a	DL24cb
31	2600I	2048	8	SC	MNG	550n	575m	0.0	5.0	.80	2.2§	1.6m	.40	0	7	ROM	B94	DL24dk
32	AM9217ADC	2048	8	SC	MNG	550n	1.0 ∅	0.0	5.0	.80	2.0§	3.2m	.40	0	7			DL24eu
33	AM9217ADM	2048	8	SC	MNG	550n	1.0 ∅	0.0	5.0	.80	2.0§	3.2m	.45	5	C			DL24eu
34	MCM65516-55	2048	8	SC	MNG	550n	30m	0.0	5.0	.80	3.0	1.6m	.40	0	7		PN18cc	DL18ai
35	M58731-XXXS	2048	8	SC	MNG	850n	515m	0.0	5.0	.80	2.0	1.9m	.45	0	7		B182	DL24dx
36	C2316A	2048	8	SC	MNG	1.0u	1.0 ∅	0.0	5.0	.80	2.0§	2.0m	.45	0	8	CS	B182	DL24bk
37	D2316A	2048	8	SC	MNG	1.0u	1.0 ∅	0.0	5.0	.80	2.0§	2.0m	.45	0	8		B182	ML133c
38	P2316A	2048	8	SC	MNG	1.0u	1.0 ∅	0.0	5.0	.80	2.0§	2.0m	.45	0	8	CS	B182	DL24aj
39	2316	2048	8	SC	MNG	2.0u	150m	0.0	5.0	.65	2.2	1.6m	.45	0	7		B78	DL∅
40	RO3-8316B	2048	8	SC	MNI	450n	450m	0.0	5.0	.80	2.0§	1.6m	.40	0	7		B182	DL24cr
41	SYC4600	2048	8	SC	MNI∅	550n	1.0 ∅	0.0	5.0	.80	2.0§	2.4m	.40	0	7	PROM	B287	DL24dk
42	SYP4600	2048	8	SC	MNI	550n	1.0 ∅	0.0	5.0	.80	2.0§	2.4m	.40	0	7	PROM	B287	DL24aj
43	RO3-8316	2048	8	SC	MNI	850n	200m†	0.0	5.0	.65	2.2§	1.9m	.45	0	7		B182	
44	RO3-8316A	2048	8	SC	MNI	850n	325m	0.0	5.0	.65	2.2	1.6m	.45	0	7		B182	DL24cr
45	S4216B	2048	8	SC	MNX	250n	450m	0.0	5.0	.80	2.2§	8.0m	.40	0	7	VMOS ROM	A458	DL∅
46	SBB2616A	2048	8	SC	MNX	300n	1.0 ∅		7.0	0.80	2.0§	3.2m	0.40	0	7	ROM	B505	DL24∅
47	SAB8316	2048	8	SC	MNX	350n	330m	0.0	5.0	.80	2.0§	3.2m	.40	0	7	CS ROM	B302	ML21a
48	2316E	2048	8	SC	MNX	420n	600m	0.0	5.0	.80	2.4§	2.1m	.40	0	7		B78c	DL∅
49	C2316E	2048	8	SC	MNX	450n	600m	0.0	5.0	.80	2.4§	2.1m	.40	0	7		B182a	DL24ed
50	D2316E	2048	8	SC	MNX	450n	600m	0.0	5.0	.80	2.4§	2.1m	.40	0	7		B182a	DL24cs
51	MM5246J	2048	8	SC	MNX	450n	650m	0.0	5.0	.65	2.0§	3.2m	.40	0	7	ROM	B362	ML183a
52	MM5246N	2048	8	SC	MNX	450n	650m	0.0	5.0	.65	2.0§	3.2m	.40	0	7	ROM	B362	DL24au
53	P2316E	2048	8	SC	MNX	450n	600m	0.0	5.0	.80	2.4§	2.1m	.40	0	7		B182a	DL24ct
54	SBB2616D	2048	8	SC	MNX	450n	1.0 ∅		7.0	0.80	2.0§	3.2m	0.40	0	7	ROM	B505	DL24ev
55	SBB2616E	2048	8	SC	MNX	450n	1.0 ∅		7.0	0.80	2.0§	3.2m	0.40	0	7	ROM	B505	DL24fq
56	SBB2616P	2048	8	SC	MNX	450n	1.0 ∅		7.0	0.80	2.0§	3.2m	0.40	0	7	ROM	B505	DL24go
57	SBB2616PI	2048	8	SC	MNX	450n	1.0 ∅		7.0	0.80	2.0§	3.2m	0.40	0	7	ROM	B505	DL24go
58	uPD2316AC1	2048	8	SC	MNX	450n	490m	0.0	5.0	.80	2.0§	2.0m	.45	1	7		B182	ML133f
59	uPD2316AC	2048	8	SC	MNX	450n	520m	0.0	5.0	.80	2.0§	2.0m	.45	1	7		B182	DL24ee
60	uPD2316AD1	2048	8	SC	MNX	450n	490m	0.0	5.0	.80	2.0§	2.0m	.45	1	7	ROM	B182	ML266
61	uPD2316AD	2048	8	SC	MNX	450n	520m	0.0	5.0	.80	2.0§	2.0m	.45	1	7		B182	DL24bz
62	uPD466D	2048	8	SC	MNX	475n	417m†	5.0	12	.70	3.0§	1.7m	.50	1	7		B421	DL28k
63	uPD466D-001	2048	8	SC	MNX	475n	417m†	5.0	12	.70	3.0§	1.7m	.50	1	7		B421	DL28k
64	MCM6832C	2048	8	SC	MNX	550n	527m	5.0	12	.80	3.0§	1.6m	.40	0	7	CS ROM	B144	DL24ao
65	MCM6832P	2048	8	SC	MNX	550n	527m	5.0	12	.80	3.0§	1.6m	.40	0	7	CS ROM	B144	DL24br
66	MM4246J	2048	8	SC	MNX	575n	650m	0.0	5.0	.65	2.0§	3.2m	.40	5	C	ROM	B362	ML183a
67	EA2316ADC	2048	8	SC	MNX	600n	1.0	0.0	5.0	2.2	0.8§	100uΔ	.45	0	7	CS;OR-Tie	B182	DL16ce
68	EA2316ADM	2048	8	SC	MNX	600n	1.0	0.0	5.0	2.2	0.8§	100uΔ	.45	5	9	CS;OR-Tie	B182	DL16ce
69	MCM6590L	2048	8	SC	MNX	800n	405m	3.0	12	.80	3.0§	1.6m	.40	0	7		B144	DL24d
70	S9996#1	2048	8	SC	MPI	1.5u	240m	12	5.0	.90	3.5			0	6		A146	ML34d
71	S9996#2	2048	8	SC	MPI	1.5u	240m	12	5.0	.90	3.5			0	6		A146	ML155
72	TMS4800JL#1	2048	8	SC	MPX	700n	450m†	12	5.0	.60	3.5	50u	.40	0	7		B94	DL24de
73	TMS4800NL#1	2048	8	SC	MPX	700n	450m†	12	5.0	.60	3.5	50u	.40	0	7		B94	DL24bw
74	EA4900#1	2048	8	SC	MPX	950n	1.2	12	5.0	5.6	3.5			0	6		B94	DL24bb
75	EA4900#2	2048	8	SC	MPX	950n	1.2	12	5.0	5.6	3.5			0	6		B94	DL24as
76	EA4900C#1	2048	8	SC	MPX	950n	800m	12	5.0	.60	3.5	1.6m	.40	0	7		B94a	DL24as
77	EA4900C#2	2048	8	SC	MPX	950n	1.2	12	5.0	.60	3.5	1.6m	.40	0	7		B94a	DL24ch
78	FDR151BZ	2048	8	SC	MPX	1.2u	525m	12	5.0	3.5	.60	1.6m	.40	0	7		B94	DL24ag
79	FDR151Z	2048	8	SC	MPX	1.2u	525m	12	5.0	3.5	.60	1.6m	.40	0	7		B94	DL24bb
80	B2616	2048	8	SC	MXX	450n	525m	0.0	5.0	.80	2.0	2.1m	.45	0	7	PROM	B289	ML267
81	MCM68317L	2048	8	SC	NNX	500n	650m	0.0	5.0	0.8	2.0§			0	6		B211	DL24dk
82	MCM68317P	2048	8	SC	NNX	500n	650m	0.0	5.0	0.8	2.0§			0	6		B211	DL24cb
83	SM82S190-1	2048	8	SE		50n		0.0	5.2	.80	2.0Δ	12m	.50	0	7	PROM	B305	DL24eg
84	SM82S191-1	2048	8	SE		50n		0.0	5.2	.80	2.0§	12m	.50	0	7	PROM	B305	DL24eg
85	MM82S190-1	2048	8	SE		60n		0.0	5.5	.80	2.0Δ	12m	.50	5	C	PROM	B305	DL24eg
86	MM82S191-1	2048	8	SE		60n		0.0	5.5	.80	2.0§	12m	.50	5	C	PROM	B305	DL24eg
87	SM82S190-2	2048	8	SE		65n		0.0	5.2	.80	2.0Δ	12m	.50	0	7	PROM	B305	DL24eg
88	SM82S191-2	2048	8	SE		65n		0.0	5.2	.80	2.0§	12m	.50	0	7	PROM	B305	DL24eg
89	MM82S190-2	2048	8	SE		80n		0.0	5.5	.80	2.0Δ	12m	.50	5	C	PROM	B305	DL24eg
90	MM82S191-2	2048	8	SE		80n		0.0	5.5	.80	2.0§	12m	.50	5	C	PROM	B305	DL24eg
91	SM82S190-3	2048	8	SE		80n		0.0	5.2	.80	2.0Δ	12m	.50	0	7	PROM	B305	DL24eg
92	SM82S191-3	2048	8	SE		80n		0.0	5.2	.80	2.0§	12m	.50	0	7	PROM	B305	DL24eg
93	MM82S190-3	2048	8	SE		100n		0.0	5.5	.80	2.0Δ	12m	.50	5	C	PROM	B305	DL24eg
94	MM82S191-3	2048	8	SE		100n		0.0	5.5	.80	2.0§	12m	.50	5	C	PROM	B305	DL24eg
95	B2716-1	2048	8	SE		350n	525m	0.0	5.0	.80	2.0	2.1m	.45	0	7	EPROM	B289	ML267
96	B2716-2	2048	8	SE		390n	525m	0.0	5.0	.80	2.0	2.1m	.45	0	7	EPROM	B289	ML267
97	B2716	2048	8	SE		450n	525m	0.0	5.0	.80	2.0	2.1m	.45	0	7	EPROM	B289	ML267
98	MN2716	2048	8	SE		450n	500m	0.0	5.0	.80	2.2			1	7	EP ROM	B289	DL24dj
99	3636B-1	2048	8	SE	BTD	35n	.82 †	0.0	5.5	0.85	2.0	10m	0.3	0	7	PROM	B497	
100	53RA1681J	2048	8	SE	BTD	45n	650m†	0.0	5.0	.80	2.0	16m	.50	5	C	PROM;Reg	B333	DL24cn
101	53RA1681N	2048	8	SE	BTD	45n	650m†	0.0	5.0	.80	2.0	16m	.50	5	C	PROM;Reg	B333	DL24co
102	53RA1683J	2048	8	SE	BTD	45n	650m†	0.0	5.0	.80	2.0	16m	.50	5	C	PROM;Reg	B333	ML282
103	53RA1683N	2048	8	SE	BTD	45n	650m†	0.0	5.0	.80	2.0	16m	.50	5	C	PROM;Reg	B333	DL24bi
104	63RA1681J	2048	8	SE	BTD	45n	650m†	0.0	5.0	.80	2.0	20m	.50	0	7	PROM;Reg	B333	DL24cn
105	63RA1681N	2048	8	SE	BTD	45n	650m†	0.0	5.0	.80	2.0	20m	.50	0	7	PROM;Reg	B333	DL24co
106	63RA1683J	2048	8	SE	BTD	45n	650m†	0.0	5.0	.80	2.0	20m	.50	0	7	PROM;Reg	B333	ML282
107	63RA1683N	2048	8	SE	BTD	45n	650m†	0.0	5.0	.80	2.0	20m	.50	0	7	PROM;Reg	B333	DL24bi
108	MB7136H	2048	8	SE	BTD	45n		0.0		0.8	2.0§	10m	0.5	0	7	PROM	B527	DL22ai
109	SN74S455N	2048	8	SE	BTD	45n	625m	0.0	5.0	.80	2.0Δ	16m	.50	0	7	PROM	PN18ba	DL18f
110	53S1680F	2048	8	SE	BTD	46n	620m†	0.0	5.0	.80	2.0Δ	16m	.50	5	C	PROM	PN24ef	FL50

SYMBOLS AND CODES
EXPLAINED IN INTERPRETER

3. READ ONLY MEMORIES (ROMS)

IN ORDER OF (1)No.WDS(2)No.BITS/WD(3)OP.MODE PRG.CODE(4)STRUCT.(5)MAX ACC.TIME(6)TYPE No.

LINE No.	6 TYPE NUMBER	ORGANIZATION 1 NO. WORDS	2 BITS PER WORD	3 OP MODE PROG CODE	4 STRUC-TURE CODE	5 MAX. ACCESS TIME (S)	MAX. POWER DISS. (W)	POWER SUPPLY SPAN NEG. (V)	POS. (V)	INPUT LOGIC LEVELS MAX. '0' (V)	MIN. '1' (V)	MIN.OUTPUT SINK CURRENT (A)	@ OUT (V)	OPER TEMP RNGE CODE -	+	GENERAL DESCRIPTION	DRAWINGS FUNCTIONAL EQUIVALENT NUMBER	OUTLINE
1	53S1680J	2048	8	SE	BTD	46n	620m†	0.0	5.0	.80	2.0Δ	16m	.50	5	C	PROM	PN24ef	DL24cn
2	53S1680N	2048	8	SE	BTD	46n	620m†	0.0	5.0	.80	2.0Δ	16m	.50	5	C	PROM	PN24ef	DL24co
3	53S1681F	2048	8	SE	BTD	46n	620m†	0.0	5.0	.80	2.0§	16m	.50	5	C	PROM	PN24ef	FL50
4	53S1681J	2048	8	SE	BTD	46n	620m†	0.0	5.0	.80	2.0§	16m	.50	5	C	PROM	PN24ef	DL24cn
5	53S1681N	2048	8	SE	BTD	46n	620m†	0.0	5.0	.80	2.0§	16m	.50	5	C	PROM	PN24ef	DL24co
6	63S1680F	2048	8	SE	BTD	46n	620m†	0.0	5.0	.80	2.0Δ	16m	.45	0	7	PROM	PN24ef	FL50
7	63S1680J	2048	8	SE	BTD	46n	620m†	0.0	5.0	.80	2.0Δ	16m	.45	0	7	PROM	PN24ef	DL24cn
8	63S1680N	2048	8	SE	BTD	46n	620m†	0.0	5.0	.80	2.0Δ	16m	.45	0	7	PROM	PN24ef	DL24co
9	63S1681F	2048	8	SE	BTD	46n	620m†	0.0	5.0	.80	2.0§	16m	.45	0	7	PROM	PN24ef	FL50
10	63S1681J	2048	8	SE	BTD	46n	620m†	0.0	5.0	.80	2.0§	16m	.45	0	7	PROM	PN24ef	DL24cn
11	63S1681N	2048	8	SE	BTD	46n	620m†	0.0	5.0	.80	2.0§	16m	.45	0	7	PROM	PN24ef	DL24co
12	53PS1680F	2048	8	SE	BTD	48n	620m†	0.0	5.0	.80	2.0Δ	16m	.50	5	C	PROM;Pwr Sw	PN24ef	FL50
13	53PS1680J	2048	8	SE	BTD	48n	620m†	0.0	5.0	.80	2.0Δ	16m	.50	5	C	PROM;Pwr Sw	PN24ef	DL24cn
14	53PS1680N	2048	8	SE	BTD	48n	620m†	0.0	5.0	.80	2.0Δ	16m	.50	5	C	PROM;Pwr Sw	PN24ef	DL24co
15	53PS1681F	2048	8	SE	BTD	48n	620m†	0.0	5.0	.80	2.0§	16m	.50	5	C	PROM;Pwr Sw	PN24ef	FL50
16	53PS1681J	2048	8	SE	BTD	48n	620m†	0.0	5.0	.80	2.0§	16m	.50	5	C	PROM;Pwr Sw	PN24ef	DL24cn
17	53PS1681N	2048	8	SE	BTD	48n	620m†	0.0	5.0	.80	2.0§	16m	.50	5	C	PROM;Pwr Sw	PN24ef	DL24co
18	63PS1680F	2048	8	SE	BTD	48n	620m†	0.0	5.0	.80	2.0Δ	16m	.45	0	7	PROM;Pwr Sw	PN24ef	FL50
19	63PS1680J	2048	8	SE	BTD	48n	620m†	0.0	5.0	.80	2.0Δ	16m	.45	0	7	PROM;Pwr Sw	PN24ef	DL24cn
20	63PS1680N	2048	8	SE	BTD	48n	620m†	0.0	5.0	.80	2.0Δ	16m	.45	0	7	PROM;Pwr Sw	PN24ef	DL24co
21	63PS1681F	2048	8	SE	BTD	48n	620m†	0.0	5.0	.80	2.0§	16m	.45	0	7	PROM;Pwr Sw	PN24ef	FL50
22	63PS1681J	2048	8	SE	BTD	48n	620m†	0.0	5.0	.80	2.0§	16m	.45	0	7	PROM;Pwr Sw	PN24ef	DL24cn
23	63PS1681N	2048	8	SE	BTD	48n	620m†	0.0	5.0	.80	2.0§	16m	.45	0	7	PROM;Pwr Sw	PN24ef	DL24co
24	SN54S452J	2048	8	SE	BTD	50n	625m	0.0	5.0	.80	2.0§	12m	.50	5	C	PROM	PN24ef	DL24t
25	SN54S453J	2048	8	SE	BTD	50n	625m	0.0	5.0	.80	2.0Δ	12m	.50	5	C	PROM	PN24ef	DL24t
26	SN74S452J	2048	8	SE	BTD	50n	625m	0.0	5.0	.80	2.0§	12m	.50	0	7	PROM	PN24ef	DL24t
27	SN74S452N	2048	8	SE	BTD	50n	625m	0.0	5.0	.80	2.0§	12m	.50	0	7	PROM	PN24ef	DL24by
28	SN74S453J	2048	8	SE	BTD	50n	625m	0.0	5.0	.80	2.0Δ	12m	.50	0	7	PROM	PN24ef	DL24t
29	SN74S453N	2048	8	SE	BTD	50n	625m	0.0	5.0	.80	2.0Δ	12m	.50	0	7	PROM	PN24ef	DL24by
30	MB7136E	2048	8	SE	BTD	55n		0.0		0.8	2.0§	10m	0.5	0	7	PROM	B527	DL22ai
31	3636-1	2048	8	SE	BTD	65n	.82 †	0.0	5.5	0.85	2.0	10m	0.3	0	7	PROM	B497a	
32	D3636-1	2048	8	SE	BTD	65n	.05m†	0.0	5.0	.85	2.0§	40uΔ	5.5	0	7	PROM	B456	DL24cs
33	53LS1680F	2048	8	SE	BTD	66n	335m†	0.0	5.0	.80	2.0Δ	12m	.50	5	C	PROM	PN24ef	FL50
34	53LS1680J	2048	8	SE	BTD	66n	335m†	0.0	5.0	.80	2.0Δ	12m	.50	5	C	PROM	PN24ef	DL24cn
35	53LS1680N	2048	8	SE	BTD	66n	335m†	0.0	5.0	.80	2.0Δ	12m	.50	5	C	PROM	PN24ef	DL24co
36	53LS1681F	2048	8	SE	BTD	66n	335m†	0.0	5.0	.80	2.0§	12m	.50	5	C	PROM	PN24ef	FL50
37	53LS1681J	2048	8	SE	BTD	66n	335m†	0.0	5.0	.80	2.0§	12m	.50	5	C	PROM	PN24ef	DL24cn
38	53LS1681N	2048	8	SE	BTD	66n	335m†	0.0	5.0	.80	2.0§	12m	.50	5	C	PROM	PN24ef	DL24co
39	63LS1680F	2048	8	SE	BTD	66n	335m†	0.0	5.0	.80	2.0Δ	16m	.45	0	7	PROM	PN24ef	FL50
40	63LS1680J	2048	8	SE	BTD	66n	335m†	0.0	5.0	.80	2.0Δ	16m	.45	0	7	PROM	PN24ef	DL24cn
41	63LS1680N	2048	8	SE	BTD	66n	335m†	0.0	5.0	.80	2.0Δ	16m	.45	0	7	PROM	PN24ef	DL24co
42	63LS1681F	2048	8	SE	BTD	66n	335m†	0.0	5.0	.80	2.0§	16m	.45	0	7	PROM	PN24ef	FL50
43	63LS1681J	2048	8	SE	BTD	66n	335m†	0.0	5.0	.80	2.0§	16m	.45	0	7	PROM	PN24ef	DL24cn
44	63LS1681N	2048	8	SE	BTD	66n	335m†	0.0	5.0	.80	2.0§	16m	.45	0	7	PROM	PN24ef	DL24co
45	MCM7684DC	2048	8	SE	BTD	70n	600m	0.0	5.0	.80	2.0Δ	16m	.45	0	7	PROM	B393	DL24dq
46	29680DC	2048	8	SE	BTD	80n	900mØ	0.0	5.0	.80	2.0Δ	16m	.50	0	7	PROM	B398	DLØ
47	D3636	2048	8	SE	BTD	80n	.05m†	0.0	5.0	.85	2.0§	40uΔ	5.5	0	7	PROM	B456	DL24cs
48	MD3636	2048	8	SE	BTD	80n	.05m†	0.0	5.0	.85	2.0§	40uΔ	5.25	5	C	PROM	B456	DL24cs
49	29682DC	2048	8	SE	BTD	85n	900mØ	0.0	5.0	.80	2.0Δ	16m	.50	0	7	PROM;Pwr Sw	B398	DLØ
50	MCM7684DM	2048	8	SE	BTD	85n	700m	0.0	5.0	.80	2.0Δ	16m	.45	5	C	PROM	B393	DL24dq
51	MCM7685DM	2048	8	SE	BTD	85n	700m	0.0	5.0	.80	2.0§	16m	.45	5	C	PROM	B393	DLØ
52	29680DM	2048	8	SE	BTD	100n	900mØ	0.0	5.0	.80	2.0Δ	16m	.50	5	C	PROM	B398	DLØ
53	29682DM	2048	8	SE	BTD	105n	900mØ	0.0	5.0	.80	2.0Δ	16m	.50	5	C	PROM;Pwr Sw	B398	DLØ
54	MB7136HT	2048	8	SE	BTX	45n		0.0	5.0	.80	2.0§	10m	.50	0	7	PROM	B527	DL22m
55	MB7136ET	2048	8	SE	BTX	55n		0.0	5.0	.80	2.0§	10m	.50	0	7	PROM	B527	DL22m
56	RC82S190I	2048	8	SE	BTX	100n	925m	0.0	5.0	.80	2.0Δ	9.6m	.50	5	C	PROM	B305	DL24dk
57	RC82S190N	2048	8	SE	BTX	100n	925m	0.0	5.0	.80	2.0Δ	9.6m	.50	5	C	PROM	B305	DL24ar
58	RC82S191I	2048	8	SE	BTX	100n	925m	0.0	5.0	.80	2.0§	9.6m	.50	5	C	PROM	B305	DL24dk
59	S82S190I	2048	8	SE	BTX	100n	925m	0.0	5.0	.80	2.0Δ	9.6m	.50	5	C	PROM	B305	DL24dk
60	SYC2716-1	2048	8	SE	BTX	350n	1.0 Ø	0.0	5.0	.45	2.0	10uΔ	5.25	0	7	EPROM		DLØ
61	SYC2716-2	2048	8	SE	BTX	390n	1.0 Ø	0.0	5.0	.45	2.0	10uΔ	5.25	0	7	EPROM		DLØ
62	MB2716	2048	8	SE	BTX	450n	525m	0.0	5.0	.80	2.0	2.1m	.45	0	7	UVEPROM	B289	DL24aw
63	SYC2716	2048	8	SE	BTX	450n	1.0 Ø	0.0	5.0	.45	2.0	10uΔ	5.25	0	7	EPROM		DLØ
64	MBM2716C	2048	8	SE	MNG		1.6	0.0	5.0	0.8	2.0§	2.1m	.45	0	7	EEPROM	B308	DL24fx
65	MBM2716HC	2048	8	SE	MNG		1.6	0.0	5.0	0.8	2.0§	2.1m	.45	0	7	EEPROM	B308	DL24fx
66	MCM27L16-25C																	
		2048	8	SE	MNG	250n		0.0	5.0	.80	2.0	2.1m	.45	0	7	EPROM	B508	DL24k
67	TMS2516-25JL																	
		2048	8	SE	MNG	250n	525m	0.0	5.0	0.8	2.0	2.1m	0.45	0	7	EPROM	B226a	DL24t
68	MK2716J-5	2048	8	SE	MNG	300n	500m	0.0	5.0	.80	2.0	10uΔ	5.25	0	7	EPROM	PN24dk	DL24cv
69	MK2716T-5	2048	8	SE	MNG	300n	500m	0.0	5.0	.80	2.0	10uΔ	5.25	0	7	EPROM	PN24dk	DL24dd
70	TMS27A16C	2048	8	SE	MNG	300n	1.0	5.0	12	.65	3.8§	1.6m	.45	0	7	EPROM	B298	DL24m
71	TMS27A16L	2048	8	SE	MNG	300n	1.0	5.0	12	.65	3.8§	1.6m	.45	0	7	EPROM	B289	DL24dq
72	HN48016	2048	8	SE	MNG	350n	160m†	0.0	5.0	.80	2.0			0	7	EPROM		ML207h
73	MCM27L16-35C																	
		2048	8	SE	MNG	350n		0.0	5.0	.80	2.0	2.1m	.45	0	7	EPROM	B508	DL24k
74	MCM27L16-35L																	
		2048	8	SE	MNG	350n		0.0	5.0	.80	2.0	2.1m	.45	0	7	EPROM	B508	DL24ei
75	MK2716J-6	2048	8	SE	MNG	350n	500m	0.0	5.0	.80	2.0	10uΔ	5.25	0	7	EPROM	PN24dk	DL24cv
76	MK2716T-6	2048	8	SE	MNG	350n	500m	0.0	5.0	.80	2.0	2.1m	.45	0	7	EPROM	PN24dk	DL24dd
77	MM2758-1	2048	8	SE	MNG	350n	525m	0.0	5.0	.80	2.0§	2.1m	.45	0	7	EPROM	B288	DL24cu
78	SFF71A716J	2048	8	SE	MNG	350n		0.0	5.0	0.8	2.0	2.1m	0.45	0	7	Pwr Sw;PROM	B289	DL24dr
79	SFF71A716K	2048	8	SE	MNG	350n		0.0	5.0	0.8	2.0	2.1m	0.45	0	7	Pwr Sw;PROM	B289	DL24dr
80	MK2716T-7	2048	8	SE	MNG	390n	500m	0.0	5.0	.80	2.0	2.1m	.45	0	7	EPROM	PN24dk	DL24dd
81	MKB2716T-87	2048	8	SE	MNG	390n	633m	0.0	5.0	.80	2.0§	10uΔ	5.5	5	A	EPROM	B289	
82	C2716	2048	8	SE	MNG	450n	500m	0.0	5.0	.80	2.0	2.1m	.45	0	7	EPROM	B298	DL24ed
83	MCM27L16C	2048	8	SE	MNG	450n		0.0	5.0	.80	2.0	2.1m	.45	0	7	EPROM	B508	DL24k
84	MCM27L16L	2048	8	SE	MNG	450n		0.0	5.0	.80	2.0	2.1m	.45	0	7	EPROM	B508	DL24ei
85	MCM2716L	2048	8	SE	MNG	450n	500m	5.0	5.0	.80	2.0	2.1m	.45	0	7	UVEPROM	B289	DL24dq
86	MCM2717L	2048	8	SE	MNG	450n	1.8 Ø	5.0	12	.65	2.2§	1.6m	.45	0	7	EPROM	B289a	DL24dd
87	MK2716J-8	2048	8	SE	MNG	450n	500m	0.0	5.0	.80	2.0	10uΔ	5.25	0	7	EPROM	PN24dk	DL24cv
88	MK2716T-8	2048	8	SE	MNG	450n	500m	0.0	5.0	.80	2.0	2.1m	.45	0	7	EPROM	PN24dk	DL24dd
89	MKB2716T-88	2048	8	SE	MNG	450n	633m	0.0	5.0	.80	2.0§	10uΔ	5.5	5	A	EPROM	B289	
90	MM2716	2048	8	SE	MNG	450n	525m	0.0	5.0	.80	2.0§	2.1m	.45	0	7	EPROM	B288	DL24cu
91	MM2758	2048	8	SE	MNG	450n	525m	0.0	5.0	.80	2.0§	2.1m	.45	0	7	EPROM	B288	DL24cu
92	SAB8716	2048	8	SE	MNG	450n	525m	0.0	5.0	.80	2.2§	2.1m	.45	0	7	EPROM	B289	DLØ
93	SFF71716J	2048	8	SE	MNG	450n		0.0	5.0	0.8	2.0	2.1m	0.45	0	7	Pwr Sw;PROM	B289	DL24dr
94	SFF71716K	2048	8	SE	MNG	450n		0.0	5.0	0.8	2.0	2.1m	0.45	0	7	Pwr Sw;PROM	B289	DL24dr
95	TMS2516JDL	2048	8	SE	MNG	450n	560m	0.0	5.0	.80	2.0§	2.1m	.45	0	7	EPROM	B226a	ML207k
96	TMS2716JDL	2048	8	SE	MNG	450n	714m	5.0	12	.65	2.4§	1.6m	.45	0	7	EPROM	B289	ML207k
97	TMS2716JL	2048	8	SE	MNG	450n	714m	5.0	12	.65	2.4§	1.6m	.45	0	7	EPROM	B289	DL24t
98	MK2716J-7	2048	8	SE	MNG	490n	500m	0.0	5.0	.80	2.0	10uΔ	5.25	0	7	EPROM	PN24dk	DL24cv
99	MKB2716T-90	2048	8	SE	MNG	550n	633m	0.0	5.0	.80	2.0§	10uΔ	5.5	5	A	EPROM	B289	
100	MK2716T-12	2048	8	SE	MNG	650n	525m	0.0	5.0	.80	2.0	10uΔ	5.25	0	7	EPROM	B279a	DL24dd
101	S4716	2048	8	SE	MNX	250n	525m	0.0	5.0							EPROM	A459a	DLØ
102	M2816-4	2048	8	SE	MNX	450n	.50 †	0.0	5.5	0.8	2.2	2.1m	.45	5	C	EEROM	B500	
103	9010-1322	2048	8	SE	MNX	750n	11	24	32					0	6	PROM		
104	SCM5317	2048	8	SS	MCX	580n	50m†	0.0	5.0	0.8	2.0§	1.0uΔ				Latched Out	B460	
105	HN462316EP	2048	8	SS	MNG	350n		0.0	5.0	.80	2.0§	10uΔ	2.4	2	7	CSROM	B291a	DL24bq
106	KM8657	2048	8	SS	MPA	800n	440m	3	12							out:3state TTL		

SYMBOLS AND CODES EXPLAINED IN INTERPRETER

3. READ ONLY MEMORIES (ROMS)

IN ORDER OF (1)No.WDS(2)No.BITS/WD(3)OP.MODE PRG.CODE(4)STRUCT.(5)MAX ACC.TIME(6)TYPE No.

LINE No.	6 TYPE NUMBER	ORGANIZATION 1 NO. WORDS	2 BITS PER WORD	3 OP MODE PROG CODE	4 STRUC-TURE CODE	5 MAX. ACCESS TIME (S)	MAX. POWER DISS. (W)	POWER SUPPLY SPAN NEG. (V)	POS. (V)	INPUT LOGIC LEVELS MAX. '0' (V)	MIN. '1' (V)	MIN.OUTPUT SINK CURRENT (A)	@ OUT (V)	OPER TEMP RNGE CODE -	+	GENERAL DESCRIPTION	DRAWINGS FUNCTIONAL EQUIVALENT NUMBER	OUTLINE
1	EA4800#1	2048	8	SS	MPX	1.2u	525m	12	5.0	3.5	.60	1.6m	.40	0	7		B94	DL24bb
2	EA4800#2	2048	8	SS	MPX	1.2u	525m	12	5.0	3.5	.60	1.6m	.40	0	7		B94	ML3a
3	RO3-20480	2048	10	SC	MNI	500n	250m†	0.0	5.0		§			0	7		B231	DL24ck
4	MRM4C2048-10	2048	10	SC	MXX	330n	9.5	12	12	.40	2.5	1.6m	.40	0	7		B54	PL4
5	MCS2008	2560	1	SC	MPN	800n	450mØ	12	5.0	.80	3.5			2	8		PN24ab	DLØ
6	9010-1323	3072	8	SE	MNX	750n	11	24	32					0	6	PROM		
7	S4532	4096		SE	MNX	250n		0.0	5.0							EPROM	A459	DLØ
8	GER542W1#1	4096	1	SC	MXR	500n	350m†	12	5.0	1.0Ø	4.0						B8c	ML30
9	UA2596D4#4	4096	1	SC	MXX	900n	600mØ	20	0.0	.80♦	2.7	1.6m	.40	5	C		B9c	DL24ay
10	UA2596D8#4	4096	1	SC	MXX	900n	600mØ	20	0.0	.80♦	2.7	1.6m	.40	5	C		B9c	DL28b
11	UA3596D4#4	4096	1	SC	MXX	900n	600mØ	20	0.0	.80♦	2.7	1.6m	.40	2	7		B9c	DL24ay
12	UA3596D8#4	4096	1	SC	MXX	900n	600mØ	20	0.0	.80♦	2.7	1.6m	.40	2	7		B9c	DL28b
13	TMS4300JC#1	4096	1	SC	MXX	2.0u	250m†	12	12	-3.0	-9.0	2.0m	-2.0	2	8		B58c	ML47b
14	MK28000P#2	4096	4	DC	MPI	600n	340m♦	12	5.0	.80	-1.5	10u#△		0	7		B94	DL24dd
15	EA4600C#3	4096	4	SC	MNA	550n	800m	0.0	5.0	.40%	2.4	1.6m	.40	0	7		B94a	DL24as
16	EA4600C#4	4096	4	SC	MNA	550n	1.2	0.0	5.0	.40%	2.4	1.6m	.40	0	7		B94a	DL24ch
17	EA4600M#3	4096	4	SC	MNA	750n	800m	0.0	5.0	.40%	2.4	1.6m	.40	5	C		B94a	DL24as
18	EA4600M#4	4096	4	SC	MNA	750n	1.2	0.0	5.0	.40%	2.4	1.6m	.40	5	C		B94a	DL24ch
19	EA4600C1#3	4096	4	SC	MNA	800n	800m	0.0	5.0	.40%	2.4	1.6m	.40	0	7		B94a	DL24as
20	EA4600C1#4	4096	4	SC	MNA	800n	1.2	0.0	5.0	.40%	2.4	1.6m	.40	0	7		B94a	DL24ch
21	2317	4096	4	SC	MNG	2.0u	150m	0.0	5.0	.65	2.2	1.6m	.45	0	7		B78a	DLØ
22	RO3-16384	4096	4	SC	MNI	1.5u	250m	0.0	5.0	.65	2.2§	1.6m	.45	0	7		B183	DL24cr
23	MM5247J	4096	4	SC	MNX	450n	650m	0.0	5.0	.65	2.0§	3.2m	.40	0	7	ROM	B363	ML183a
24	MM5247N	4096	4	SC	MNX	450n	650m	0.0	5.0	.65	2.0§	3.2m	.40	0	7	ROM	B363	DL24au
25	MM4247J	4096	4	SC	MNX	575n	650m	0.0	5.0	.65	2.0§	3.2m	.40	5	C	ROM	B363	ML183a
26	S8996#1	4096	4	SC	MPI	1.5u	240m	12	5.0	.90	3.5			0	6	Random PR	A146	ML34d
27	S8996#2	4096	4	SC	MPI	1.5u	240m	12	5.0	.90	3.5			0	6	Random PR	A146	ML155
28	TMS4800JL#2	4096	4	SC	MPX	700n	450m†	12	5.0	.60	3.5	50u	.40	0	7		B94	DL24de
29	TMS4800NL#2	4096	4	SC	MPX	700n	450m†	12	5.0	.60	3.5	50u	.40	0	7		B94	DL24bw
30	EA4900L#1	4096	4	SC	MPX	1.3u	800m	12	5.0	.60	3.5	1.6m	.40	5	A		B94a	DL24as
31	EA4900L#2	4096	4	SC	MPX	1.3u	1.2	12	5.0	.60	3.5	1.6m	.40	5	A		B94a	DL24ch
32	53PS1640J	4096	4	SE	BTD	45n	585m†	0.0	5.0	.80	2.0△	16m	.50	5	C	PROM;Pwr Sw	PN20aa	DL20q
33	53PS1640N	4096	4	SE	BTD	45n	585m†	0.0	5.0	.80	2.0△	16m	.50	5	C	PROM;Pwr Sw	PN20aa	DL20p
34	53PS1641J	4096	4	SE	BTD	45n	585m†	0.0	5.0	.80	2.0§	16m	.50	5	C	PROM;Pwr Sw	PN20aa	DL20q
35	53PS1641N	4096	4	SE	BTD	45n	585m†	0.0	5.0	.80	2.0§	16m	.50	5	C	PROM;Pwr Sw	PN20aa	DL20p
36	53RA1641J	4096	4	SE	BTD	45n	650m†	0.0	5.0	.80	2.0	16m	.50	5	C	PROM;Reg	B332	DLØ
37	53RA1641N	4096	4	SE	BTD	45n	650m†	0.0	5.0	.80	2.0	16m	.50	5	C	PROM;Reg	B332	DLØ
38	53RS1641J	4096	4	SE	BTD	45n	650m†	0.0	5.0	.80	2.0	16m	.50	5	C	PROM;Reg	B336	DLØ
39	53RS1641N	4096	4	SE	BTD	45n	650m†	0.0	5.0	.80	2.0	16m	.50	5	C	PROM;Reg	B336	DLØ
40	63PS1640J	4096	4	SE	BTD	45n	585m†	0.0	5.0	.80	2.0△	16m	.45	0	7	PROM;Pwr Sw	PN20aa	DL20q
41	63PS1640N	4096	4	SE	BTD	45n	585m†	0.0	5.0	.80	2.0△	16m	.45	0	7	PROM;Pwr Sw	PN20aa	DL20p
42	63PS1641J	4096	4	SE	BTD	45n	585m†	0.0	5.0	.80	2.0§	16m	.45	0	7	PROM;Pwr Sw	PN20aa	DL20q
43	63PS1641N	4096	4	SE	BTD	45n	585m†	0.0	5.0	.80	2.0§	16m	.45	0	7	PROM;Pwr Sw	PN20aa	DL20p
44	63RA1641J	4096	4	SE	BTD	45n	650m†	0.0	5.0	.80	2.0	24m	.50	0	7	PROM;Reg	B332	DLØ
45	63RA1641N	4096	4	SE	BTD	45n	650m†	0.0	5.0	.80	2.0	24m	.50	0	7	PROM;Reg	B332	DLØ
46	63RS1641J	4096	4	SE	BTD	45n	650m†	0.0	5.0	.80	2.0	24m	.50	0	7	PROM;Reg	B336	DLØ
47	63RS1641N	4096	4	SE	BTD	45n	650m†	0.0	5.0	.80	2.0	24m	.50	0	7	PROM;Reg	B336	DLØ
48	53S1640J	4096	4	SE	BTD	46n	585m†	0.0	5.0	.80	2.0△	16m	.50	5	C	PROM	PN20aa	DL20q
49	53S1640N	4096	4	SE	BTD	46n	585m†	0.0	5.0	.80	2.0△	16m	.50	5	C	PROM	PN20aa	DL20p
50	53S1641J	4096	4	SE	BTD	46n	585m†	0.0	5.0	.80	2.0§	16m	.50	5	C	PROM	PN20aa	DL20q
51	53S1641N	4096	4	SE	BTD	46n	585m†	0.0	5.0	.80	2.0§	16m	.50	5	C	PROM	PN20aa	DL20p
52	63S1640J	4096	4	SE	BTD	46n	585m†	0.0	5.0	.80	2.0△	16m	.45	0	7	PROM	PN20aa	DL20q
53	63S1640N	4096	4	SE	BTD	46n	585m†	0.0	5.0	.80	2.0△	16m	.45	0	7	PROM	PN20aa	DL20p
54	63S1641J	4096	4	SE	BTD	46n	585m†	0.0	5.0	.80	2.0§	16m	.45	0	7	PROM	PN20aa	DL20q
55	63S1641N	4096	4	SE	BTD	46n	585m†	0.0	5.0	.80	2.0§	16m	.45	0	7	PROM	PN20aa	DL20p
56	29641ADC#ai	4096	4	SE	BTD	55n	1.4	0.0	5.0	0.8	2.0§	16m	.50	0	7	PROM	B535	DL20aq
57	29643ADC#ai	4096	4	SE	BTD	55n	1.4	0.0	5.0	0.8	2.0§	16m	.50	0	7	PROM	B535a	DL20aq
58	53LS1640J	4096	4	SE	BTD	66n	315m†	0.0	5.0	.80	2.0△	12m	.50	5	C	PROM	PN20aa	DL20q
59	53LS1640N	4096	4	SE	BTD	66n	315m†	0.0	5.0	.80	2.0△	12m	.50	5	C	PROM	PN20aa	DL20p
60	53LS1641J	4096	4	SE	BTD	66n	315m†	0.0	5.0	.80	2.0§	12m	.50	5	C	PROM	PN20aa	DL20q
61	53LS1641N	4096	4	SE	BTD	66n	315m†	0.0	5.0	.80	2.0§	12m	.50	5	C	PROM	PN20aa	DL20p
62	63LS1640J	4096	4	SE	BTD	66n	315m†	0.0	5.0	.80	2.0△	16m	.45	0	7	PROM	PN20aa	DL20q
63	63LS1640N	4096	4	SE	BTD	66n	315m†	0.0	5.0	.80	2.0△	16m	.45	0	7	PROM	PN20aa	DL20p
64	63LS1641J	4096	4	SE	BTD	66n	315m†	0.0	5.0	.80	2.0§	16m	.45	0	7	PROM	PN20aa	DL20q
65	63LS1641N	4096	4	SE	BTD	66n	315m†	0.0	5.0	.80	2.0§	16m	.45	0	7	PROM	PN20aa	DL20p
66	29641ADM#ai	4096	4	SE	BTD	70n	1.6	0.0	5.0	0.8	2.0§	16m	.50	5	C	PROM	B535	DL20ap
67	29641AFM#ai	4096	4	SE	BTD	70n	1.0	0.0	5.0	0.8	2.0§	16m	.50	5	C	PROM	B535	FL80
68	29643ADM#ai	4096	4	SE	BTD	70n	1.6	0.0	5.0	0.8	2.0§	16m	.50	5	C	PROM	B535a	DL20ap
69	29643AFM#ai	4096	4	SE	BTD	70n	1.0	0.0	5.0	0.8	2.0§	16m	.50	5	C	PROM	B535a	FL80
70	29641DC#ai	4096	4	SE	BTD	80n	1.4	0.0	5.0	0.8	2.0§	16m	.50	0	7	PROM	B535	DL20aq
71	29643DC#ai	4096	4	SE	BTD	85n	1.4	0.0	5.0	0.8	2.0§	16m	.50	0	7	PROM	B535a	DL20aq
72	29641DM#ai	4096	4	SE	BTD	100n	1.6	0.0	5.0	0.8	2.0§	16m	.50	5	C	PROM	B535	DL20ap
73	29641FM#ai	4096	4	SE	BTD	100n	1.0	0.0	5.0	0.8	2.0§	16m	.50	5	C	PROM	B535	FL80
74	29643DM#ai	4096	4	SE	BTD	105n	1.6	0.0	5.0	0.8	2.0§	16m	.50	5	C	PROM	B535a	DL20ap
75	29643FM#ai	4096	4	SE	BTD	105n	1.0	0.0	5.0	0.8	2.0§	16m	.50	5	C	PROM	B535a	FL80
76	EA4800#3	4096	4	SS	MPX	1.2u	525m	12	5.0	3.5	.60	1.6m	.40	0	7		B94	DL24bb
77	EA4800#4	4096	4	SS	MPX	1.2u	525m	12	5.0	3.5	.60	1.6m	.40	0	7		B94	ML3a
78	SYMD2332	4096	8			450n	1.0 ☑	0.0	5.0	0.8	2.0§	2.1m	0.4	5	C	CS	B294	DL24ii
79	M58332-XXXP	4096	8			600n		0.0	5.0	.80	2.2	2.0m	.45	0	7			
80	CM3200C	4096	8		MCX	600n	1.0	0.0	5.0	.65	2.0§	2.1m	.40	0	7	PROM	B226	DL24eg
81	CM3200P	4096	8		MCX	600n	1.0	0.0	5.0	.65	2.0§	2.1m	.40	0	7	PROM	B226	DL24eh
82	EA3200	4096	8	DC		300n	500m	5.0	12	.80	2.2	3.2m	.40	0	7		B229	DLØ
83	MCM2832-15L	4096	8	E	MNG	150n	125m	0.0	5	0.8	2.0§	2.1m	0.4	0	7	EPROM	B593	DL28be
84	MCM2832-15P	4096	8	E	MNG	150n	125m	0.0	5	0.8	2.0§	2.1m	0.4	0	7	EPROM	B593	DL28bd
85	MCM2832-20L	4096	8	E	MNG	200n	125m	0.0	5	0.8	2.0§	2.1m	0.4	0	7	EPROM	B593	DL28be
86	MCM2832-20P	4096	8	E	MNG	200n	125m	0.0	5	0.8	2.0§	2.1m	0.4	0	7	EPROM	B593	DL28bd
87	TMS2732-JL	4096	8	E	MNG	450n	788m	0	5	.8	2.2§	2.1m	.45	0	7	UVEPROM	B635	DL24hg
88	TMS3532NL	4096	8	E	MNG	450n	200m	0	5	.8	2.0§	2.1m	.45	0	7	PROM	B637	DL24hh
89	TMS3732A-NL	4096	8	E	MNG	450n	525m	0	5	.8	2.0§	2.1m	.45	0	7	PROM	B639	DL24hh
90	SAB8332	4096	8	S	MNG	450n	1.0 ☑	0.0	5.0	.80	2.2§	3.2m	.40	0	7		B226	DL24au
91	S2332	4096	8	S	MNX	350n	1.0 ☑	0.0	5.0	0.8	2.0§	10u△		0	7	2SC;OR-Tie	B486	DL24du
92	MCS2029	4096	8	S	MPX	800n	456m♦	12	5.0	.60	-1.5						B160	DLØ
93	MN2332	4096	8	SC		300n	200m	0.0	5.0	.80	2.4			1	7	ROM	B232	DL24dj
94	SYC2332-3	4096	8	SC	BTX	300n	1.0	0.0	5.0	.80	2.0§	10u△	.40	0	7	PROM	B232	DL24dk
95	SYC2333-3	4096	8	SC	BTX	300n	1.0	0.0	5.0	.80	2.0§	10u△	.40	0	7	PROM	B232a	DL24dk
96	SYC2332	4096	8	SC	BTX	450n	1.0 ☑	0.0	5.0	.80	2.0§	10u△	.40	0	7	PROM	B232	DL24dk
97	SYC2333	4096	8	SC	BTX	450n	1.0	0.0	5.0	.80	2.0§	10u△	.40	0	7	PROM	B232a	DL24dr
98	MK32000P-5	4096	8	SC	MNG	300n	200m†	0.0	5.0	.80	2.0§			0	7		B261	DL24dd
99	2632A-35F	4096	8	SC	MNG	350n	.32	0.0	5.0	.80	2.0	3.2m	.40	0	7	ROM	B503	DL24en
100	2632A-35I	4096	8	SC	MNG	350n	.32	0.0	5.0	.80	2.0	3.2m	.40	0	7	ROM	B503	DL24ej
101	2632A-35N	4096	8	SC	MNG	350n	.32	0.0	5.0	.80	2.0	3.2m	.40	0	7	ROM	B503	DL24ej
102	MCM68A332C	4096	8	SC	MNG	350n	400m	0.0	5.0	.80	2.0§	1.6m	.40	0	7		B292	DL24cq
103	MCM68A332P	4096	8	SC	MNG	350n	400m	0.0	5.0	.80	2.0§	1.6m	.40	0	7		B292	DL24br
104	2632F	4096	8	SC	MNG	450n	400m	0.0	5.0	.80	2.2§	1.6m	.40	0	7	ROM	B350	DL24cb
105	2632I	4096	8	SC	MNG	450n	400m	0.0	5.0	.80	2.2§	1.6m	.40	0	7	ROM	B350	DL24dk
106	HN46532-2	4096	8	SC	MNG	450n	440m	0.0	5.0	.80	2.0	1.6m	.40	0	7		B247	DL28e
107	S68332C	4096	8	SC	MNG	450n	1.0	0.0	5.0	0.8	2.0			0	6	CS	B520	DL24ge
108	S68332CI	4096	8	SC	MNG	450n	1.0	0.0	5.0	0.8	2.0			3	8	CS	B520	DL24ge
109	S68332D	4096	8	SC	MNG	450n	1.0	0.0	5.0	0.8	2.0			0	6	CS	B520	DL24gd

SYMBOLS AND CODES EXPLAINED IN INTERPRETER

3. READ ONLY MEMORIES (ROMS)

IN ORDER OF (1)No.WDS(2)No.BITS/WD(3)OP.MODE PRG.CODE(4)STRUCT.(5)MAX ACC.TIME(6)TYPE No.

LINE No.	6 TYPE NUMBER	ORGANIZATION 1 NO. WORDS	2 BITS PER WORD	3 OP MODE PROG CODE	4 STRUC-TURE CODE	5 MAX. ACCESS TIME (S)	MAX. POWER DISS. (W)	POWER SUPPLY SPAN NEG. (V)	POS. (V)	INPUT LOGIC LEVELS MAX. '0' (V)	MIN. '1' (V)	MIN.OUTPUT SINK CURRENT (A)	@ OUT (V)	OPER TEMP RNGE CODE -	+	GENERAL DESCRIPTION	DRAWINGS FUNCTIONAL EQUIVALENT NUMBER	OUTLINE
1	S68332DI	4096	8	SC	MNG	450n	1.0	0.0	5.0	0.8	2.0			3	8	CS	B520	DL24gd
2	S68332P	4096	8	SC	MNG	450n	1.0	0.0	5.0	0.8	2.0			0	6	CS	B520	DL24gc
3	S68332PI	4096	8	SC	MNG	450n	1.0	0.0	5.0	0.8	2.0			3	8	CS	B520	DL24gc
4	TMS4732JDL	4096	8	SC	MNG	450n	787m	0.0	5.0	.65	2.0§	2.0m	.40	0	7		B226	ML207k
5	HN46532P-2	4096	8	SC	MNG	480n	200m†	0.0	5.0	.80	2.2	10uΔ	2.4	2	7		B247	DLØ
6	MCM68332L	4096	8	SC	MNG	500n	650m	0.0	5.0	0.8	2.0§			0	6		B292	DL24dk
7	MCM68332P	4096	8	SC	MNG	500n	650m	0.0	5.0	0.8	2.0§			0	6		B292	DL24cb
8	HN46532P-3	4096	8	SC	MNG	600n	200m†	0.0	5.0	.80	2.2	10uΔ	2.4	2	7		B247	DL28p
9	HN46532-3	4096	8	SC	MNG	650n	440m	0.0	5.0	.80	2.2	1.6m	.40	0	7		B247	DL28q
10	D2332	4096	8	SC	MNX			0.0	5.0	.80	2.0§					ROM	B299	ML133c
11	P2332	4096	8	SC	MNX			0.0	5.0	.80	2.0§					ROM	B299	DL24av
12	9010-1334	4096	8	SC	MNX	250n	8.7	0.0	5.0					0	6			
13	R2332-3CMT	4096	8	SC	MNX	300n	750m	0.0	5.0	.80	2.0§	2.1m	.40	5	C		B232	DL24dk
14	SBB2632A	4096	8	SC	MNX	300n	1.0 Ø		7.0	0.80	2.0§	3.2m	0.40	0	7	ROM	B350	DL24Ø
15	SBB2633A	4096	8	SC	MNX	300n	1.0 Ø		7.0	0.80	2.0§	3.2m	0.40	0	7	ROM	B703	DL24Ø
16	EA3200DC	4096	8	SC	MNX	350n	500m	5.0	12	.80	2.4§	2.1m	.45	0	7		B257	ML218a
17	R2332C	4096	8	SC	MNX	450n	600m	0.0	5.0	.80	2.0§	2.1m	.40	0	7		B232	DL24dk
18	R2332CE	4096	8	SC	MNX	450n	675m	0.0	5.0	.80	2.0§	2.1m	.40	4	8		B232	DL24dk
19	R2332CMT	4096	8	SC	MNX	450n	750m	0.0	5.0	.80	2.0§	2.1m	.40	5	C		B232	DL24dk
20	R2332P	4096	8	SC	MNX	450n	600m	0.0	5.0	.80	2.0§	2.1m	.40	0	7		B232	DL24ad
21	R2332PE	4096	8	SC	MNX	450n	675m	0.0	5.0	.80	2.0§	2.1m	.40	4	8		B232	DL24ad
22	S68332	4096	8	SC	MNX	450n	1.0 Ø	0.0	5.0	.80	2.0§	3.2m	.40	0	7	ROM	B486	DL24bm
23	SBB2632D	4096	8	SC	MNX	450n	1.0 Ø		7.0	0.80	2.0§	3.2m	0.40	0	7	ROM	B350	DL24ev
24	SBB2632E	4096	8	SC	MNX	450n	1.0 Ø		7.0	0.80	2.0§	3.2m	0.40	0	7	ROM	B350	DL24fg
25	SBB2632P	4096	8	SC	MNX	450n	1.0 Ø		7.0	0.80	2.0§	3.2m	0.40	0	7	ROM	B350	DL24go
26	SBB2633D	4096	8	SC	MNX	450n	1.0 Ø		7.0	0.80	2.0§	3.2m	0.40	0	7	ROM	B703	DL24ev
27	SBB2633E	4096	8	SC	MNX	450n	1.0 Ø		7.0	0.80	2.0§	3.2m	0.40	0	7	ROM	B703	DL24fg
28	SBB2633P	4096	8	SC	MNX	450n	1.0 Ø		7.0	0.80	2.0§	3.2m	0.40	0	7	ROM	B703	DL24go
29	CM3200-C	4096	8	SC	MNX	600n	105m	0.0	5.0	.65	2.4§	2.1u	.40	0	7	CMOS ROM		DL24de
30	CM3200-D	4096	8	SC	MNX	600n	105m	0.0	5.0	.65	2.4§	2.1u	.40	0	7	CMOS ROM		DL24au
31	CM3200-P	4096	8	SC	MNX	600n	105m	0.0	5.0	.65	2.4§	2.1u	.40	0	7	CMOS ROM		DL24cq
32	CM3200-2D	4096	8	SC	MNX	800n	105m	0.0	5.0	.65	2.4§	2.1u	.40	0	7	CMOS ROM		DL24au
33	MM3200-2C	4096	8	SC	MNX	800n	150m	0.0	5.0	.65	2.4§	2.1u	.40	5	C	CMOS ROM		DL24de
34	CM3200-3D	4096	8	SC	MNX	1.5u	105m	0.0	5.0	.65	2.4§	2.1u	.40	0	7	CMOS ROM		DL24au
35	MM3200-3C	4096	8	SC	MNX	1.5u	150m	0.0	5.0	.65	2.4§	2.1u	.40	5	C	CMOS ROM		DL24de
36	D2732	4096	8	SE		450n	750m	0.0	5.0	.80	2.0§	2.1m	.45	0	7	EPROM	B299	DL24cs
37	D2732-6	4096	8	SE		550n	750m	0.0	5.0	.80	2.0§	10uΔ	5.25	1	7	EPROM	B299	DL24cs
38	MB7142NC	4096	8	SE	BTD	80n		0.0	5.0	.80	2.0§	16m	.50	0	7	PROM	B511	DL24em
39	MBM27C32-25Z#ai	4096	8	SE	MCG	250n	40m	0.0	5.0	.80	2.0§					UVEPROM	PN24dn	DL24gb
40	MBM27C32-30Z#ai	4096	8	SE	MCG	300n	40m	0.0	5.0	.80	2.0§					UVEPROM	PN24dn	DL24gb
41	MCM25L32-25C	4096	8	SE	MNG	250n		0.0	5.0	.65	2.2	2.1m	.45	0	7	EPROM	B439	DL24k
42	MCM25L32-25L	4096	8	SE	MNG	250n		0.0	5.0	.65	2.2	2.1m	.45	0	7	EPROM	B439	DL24ei
43	MCM25A32C	4096	8	SE	MNG	350n	800m	0.0	5.0	.65	2.2	10uΔ	5.2	0	7	EPROM	B439	DL24m
44	MCM25A32L	4096	8	SE	MNG	350n	800m	0.0	5.0	.65	2.2	10uΔ	5.2	0	7	EPROM	B439	DL24dq
45	MCM25L32-35C	4096	8	SE	MNG	350n		0.0	5.0	.65	2.2	2.1m	.45	0	7	EPROM	B439	DL24k
46	MCM25L32-35L	4096	8	SE	MNG	350n		0.0	5.0	.65	2.2	2.1m	.45	0	7	EPROM	B439	DL24ei
47	MCM68L732C35	4096	8	SE	MNG	350n		0.0	5.0	.80	2.0	10uΔ	5.25	0	7	EAROM	B438	DL24k
48	MCM68L732L35	4096	8	SE	MNG	350n		0.0	5.0	.80	2.0	10uΔ	5.25	0	7	EAROM	B438	DL24dq
49	MCM68732C35	4096	8	SE	MNG	350n		0.0	5.0	.80	2.0	10uΔ	5.25	0	7	EAROM	B438	DL24k
50	MCM68732L35	4096	8	SE	MNG	350n		0.0	5.0	.80	2.0	10uΔ	5.25	0	7	EAROM	B438	DL24dq
51	C2732	4096	8	SE	MNG	450n	750m	0.0	5.0	.80	2.0§	2.1m	.45	0	7	EPROM	B299	DL24ed
52	MBM2732	4096	8	SE	MNG	450n		0.0	5.0	.80	2.2	1.6m	.40	0	7	EPROM		
53	MCM25L32C	4096	8	SE	MNG	450n		0.0	5.0	.65	2.2	2.1m	.45	0	7	EPROM	B439	DL24k
54	MCM25L32L	4096	8	SE	MNG	450n		0.0	5.0	.65	2.2	2.1m	.45	0	7	EPROM	B439	DL24ei
55	MCM68L732C	4096	8	SE	MNG	450n		0.0	5.0	.80	2.0	10uΔ	5.25	0	7	EAROM	B438	DL24k
56	MCM68L732L	4096	8	SE	MNG	450n		0.0	5.0	.80	2.0	10uΔ	5.25	0	7	EAROM	B438	DL24dq
57	MCM2532L	4096	8	SE	MNG	450n	800m	0.0	5.0	.65	2.2	10uΔ	5.2	0	7	EPROM	B439	DL24dq
58	MCM68732C0	4096	8	SE	MNG	450n		0.0	5.0	.80	2.0	10uΔ	5.25	0	7	EAROM	B438	DL24k
59	MCM68732C1	4096	8	SE	MNG	450n		0.0	5.0	.80	2.0	10uΔ	5.25	0	7	EAROM	B438	DL24k
60	MCM68732C	4096	8	SE	MNG	450n		0.0	5.0	.80	2.0	10uΔ	5.25	0	7	EAROM	B438	DL24k
61	MCM68732L1	4096	8	SE	MNG	450n		0.0	5.0	.80	2.0	10uΔ	5.25	0	7	EAROM	B438	DL24dq
62	MCM68732L	4096	8	SE	MNG	450n		0.0	5.0	.80	2.0	10uΔ	5.25	0	7	EAROM	B438	DL24dq
63	TMS25L32-45JL	4096	8	SE	MNG	450n	500m	0.0	5.0	0.8	2.2	2.1m	0.45	0	7	EPROM	B266	DL24t
64	TMS25L32JDL	4096	8	SE	MNG	450n	500m	0.0	5.0	.80	2.0§	2.1m	.45	0	7	EPROM	B225b	ML207k
65	TMS2532JDL	4096	8	SE	MNG	450n	910m	0.0	5.0	.65	2.2§	2.1m	.45	0	7	EPROM	B226b	ML207k
66	9010-1324	4096	8	SE	MNX	750n	11	24	32					0	6	PROM		
67	R2332LC	4096	8	SS	BTX	450n	240m†	0.0	5.0	.80	2.0§	3.7m	.40	0	7	ROM		DLØ
68	R2332LCE	4096	8	SS	BTX	450n	240m†	0.0	5.0	.80	2.0§	3.7m	.40	4	8	ROM		DLØ
69	SCM23C32D	4096	8	SS	MCG	300n	500m	0.0	5.0	0.8	2.2§	1.6m	0.4	5	C	PROM	B641	DL24Ø
70	SCM23C32E	4096	8	SS	MCG	300n	500m	0.0	5.0	0.8	2.2§	1.6m	0.4	4	8	PROM	B641	DL24hi
71	SCM23C32H	4096	8	SS	MCG	300n	500m	0.0	5.0	0.8	2.2§	1.6m	0.4	5	C	PROM	B641	CHØ
72	SCM23C33D	4096	8	SS	MCG	300n	500m	0.0	5.0	0.8	2.2§	1.6m	0.4	5	C	PROM	B642	DL24Ø
73	SCM23C33E	4096	8	SS	MCG	300n	500m	0.0	5.0	0.8	2.2§	1.6m	0.4	4	8	PROM	B642	DL24Ø
74	SCM23C33H	4096	8	SS	MCG	300n	500m	0.0	5.0	0.8	2.2§	1.6m	0.4	5	C	PROM	B642	CHØ
75	SCM23C34C	4096	8	SS	MCG	300n	500m	0.0	5.0	0.8	2.2§	1.6m	0.4	5	C	PROM	B641	DL24ao
76	SCM23C34D	4096	8	SS	MCG	300n	500m	0.0	5.0	0.8	2.2§	1.6m	0.4	5	C	PROM	B641	DL24Ø
77	SCM23C34E	4096	8	SS	MCG	300n	500m	0.0	5.0	0.8	2.2§	1.6m	0.4	4	8	PROM	B641	DL24hi
78	SCM23C34H	4096	8	SS	MCG	300n	500m	0.0	5.0	0.8	2.2§	1.6m	0.4	5	C	PROM	B641	CHØ
79	SCM5534	4096	8	SS	MCX	730n	100m†	0.0	5.0	0.8	2.0§	1.0uΔ		0	7	CS:USER PROG	B470	
80	SCM5532	4096	8	SS	MCX	750n	100m†	0.0	5.0	0.8	2.0§	1.0uΔ		0	7	CS:USER PROG	B470	
81	HN46332P	4096	8	SS	MNG	350n		0.0	5.0	.80	2.0§	10uΔ	2.4	2	7	CSROM	B292	DL24bq
82	NCR2264-75	4096	16	C	MNG	75n	250m	0	5		§			0	7	Pwr SW	B619	DL22Ø
83	NCR2264-100	4096	16	C	MNG	100n	250m	0	5		§			0	7	Pwr SW	B619	DL22Ø
84	B2608	8192	1	SC	MXX	450n	800m	5.0	12	.65	3.0§	1.6m	.45	0	7	PROM	B296	ML267
85	2364-4CJ	8192	8		MNX	250n		0.0	5.0	0.8	2.0§	3.3m	0.4	0	7	ROM	PN24hy	DL24Ø
86	2364-4CK	8192	8		MNX	250n		0.0	5.0	0.8	2.0§	3.3m	0.4	0	7	ROM	PN24hy	DL24Ø
87	2364-5CJ	8192	8		MNX	300n		0.0	5.0	0.8	2.0§	3.3m	0.4	0	7	ROM	PN24hy	DL24Ø
88	2364-5CK	8192	8		MNX	300n		0.0	5.0	0.8	2.0§	3.3m	0.4	0	7	ROM	PN24hy	DL24Ø
89	TMS2764JL	8192	8	E	MNG	450n	788m	0	5	.8	2.0§	2.1m	.45	0	7	UVEPROM	B636	DL28bz
90	TMS3564NL	8192	8	E	MNG	450n	300m	0	8	.8	2.0§	2.1m	.45	0	7	PROM	B638	DL28ca
91	TMS3764NL	8192	8	E	MNG	450n	525m	0	5	.8	2.0§	2.1m	.45	0	7	PROM	B640	DL28ca
92	SYC2364	8192	8	S	BTX	450n	500m	0.0	5.0	.80	2.0§	10uΔ	.40	0	7		B232	DL24dr
93	IM6364MDG	8192	8	S	MCG	300n	500u†	0.0	5.0		§			5	C		B465	DL24ds
94	M36000-4B1	8192	8	S	MNG	250n	220m	0.0	5.0	.80	2.4	3.3m	.40	0	7		B262	DL24dd
95	M36000-4D1	8192	8	S	MNG	250n	220m	0.0	5.0	.80	2.4	3.3m	.40	0	7		B262	DL24dd
96	M36000-4F1	8192	8	S	MNG	250n	220m	0.0	5.0	.80	2.4	3.3m	.40	0	7		B262	DL24du
97	KMS36000	8192	8	S	MNG	300n	200m	0.0	5.0							Out:3 StateTTL		
98	M36000-5F1	8192	8	S	MNG	300n	220m	0.0	5.0	.80	2.4	3.3m	.40	0	7		B262	DL24du
99	S68364	8192	8	S	MNX	350n	1.0 Ø	0.0	5.0	0.8	2.0§	10uΔ		0	7	CS;OR-Tie	B471	DL24du
100	SYC2364-3	8192	8	SC	BTX	300n	1.0	0.0	5.0	.80	2.0§	10uΔ	.40	0	7	PROM	B232b	DL24dk
101	MCM68B364C	8192	8	SC	MNG	250n	300m	0.0	5.0	.80	2.0§	3.2m	.40	0	7		B328	DL24cq

SYMBOLS AND CODES EXPLAINED IN INTERPRETER

3. READ ONLY MEMORIES (ROMS)

IN ORDER OF (1)No.WDS(2)No.BITS/WD(3)OP.MODE PRG.CODE(4)STRUCT.(5)MAX ACC.TIME(6)TYPE No.

LINE No.	6 TYPE NUMBER	ORGANIZATION 1 NO. WORDS	2 BITS PER WORD	3 OP MODE PROG CODE	4 STRUC-TURE CODE	5 MAX. ACCESS TIME (S)	MAX. POWER DISS. (W)	POWER SUPPLY SPAN NEG. (V)	POS. (V)	INPUT LOGIC LEVELS MAX. '0' (V)	MIN. '1' (V)	MIN.OUTPUT SINK CURRENT (A)	@ OUT (V)	OPER TEMP RNGE CODE -	+	GENERAL DESCRIPTION	DRAWINGS FUNCTIONAL EQUIVALENT NUMBER	OUTLINE
1	MCM68B364L	8192	8	SC	MNG	250n	300m	0.0	5.0	.80	2.0§	10uΔ	5.5	0	7		B328	DL24cq
2	MCM68B364P	8192	8	SC	MNG	250n	300m	0.0	5.0	.80	2.0§	10uΔ	5.5	0	7		B328	DL24br
3	2364-30I	8192	8	SC	MNG	300n	.40	0.0	5.0	.80	2.0	3.2m	.40	0	7	ROM	B536	DL28i
4	2364-35I	8192	8	SC	MNG	350n	.40	0.0	5.0	.80	2.0	3.2m	.40	0	7	ROM	B502	DL28ac
5	2664A-35F	8192	8	SC	MNG	350n	.40	0.0	5.0	.80	2.0	3.2m	.40	0	7	ROM	B502	DL24en
6	2664A-35I	8192	8	SC	MNG	350n	.40	0.0	5.0	.80	2.0	3.2m	.40	0	7	ROM	B502	DL24cb
7	2664A-35N	8192	8	SC	MNG	350n	.40	0.0	5.0	.80	2.0	3.2m	.40	0	7	ROM	B502	DL24ej
8	MCM68A364C	8192	8	SC	MNG	350n	300m	0.0	5.0	.80	2.0§	3.2m	.40	0	7		B328	DL24cq
9	MCM68A364L	8192	8	SC	MNG	350n	300m	0.0	5.0	.80	2.0§	10uΔ	5.5	0	7		B328	DL24cq
10	MCM68A364P	8192	8	SC	MNG	350n	300m	0.0	5.0	.80	2.0§	10uΔ	5.5	0	7		B328	DL24br
11	MCM68766-35L	8192	8	SC	MNG	350n		0.0	5.0	.80	2.0§	2.1m	.45	0	7	EEROM	B438	DL24ei
12	S4264C#ai	8192	8	SC	MNG	350n	1.0	0.0	5.0	0.8	2.0			0	6	CS	B483	DL24ge
13	S4264D#ai	8192	8	SC	MNG	350n	1.0	0.0	5.0	0.8	2.0			0	6	CS	B483	DL24gd
14	S4264P#ai	8192	8	SC	MNG	350n	1.0	0.0	5.0	0.8	2.0			0	6	CS	B483	DL24gc
15	2364-45I	8192	8	SC	MNG	450n	.40	0.0	5.0	.80	2.0	3.2m	.40	0	7	ROM	B536	DL28aa
16	2664F	8192	8	SC	MNG	450n	750m	0.0	5.0	.80	2.2§	1.6m	.40	0	7	ROM	B351	DL24cb
17	2664I	8192	8	SC	MNG	450n	750m	0.0	5.0	.80	2.2§	1.6m	.40	0	7	ROM	B351	DL24dk
18	2664N	8192	8	SC	MNG	450n	750m	0.0	5.0	.80	2.2§	1.6m	.40	0	7	ROM	B351	DL24ar
19	RO3-9364B	8192	8	SC	MNI	450n		0.0	5.0	.80	2.0§						B262	DL24cr
20	D2364	8192	8	SC	MNX			0.0	5.0	.80	2.0§					ROM	B300	ML268
21	P2364	8192	8	SC	MNX			0.0	5.0	.80	2.0§					ROM	B300	ML269
22	SBB2664A	8192	8	SC	MNX	300n	1.0 Ø		7.0	0.80	2.0§	3.2m	0.40	0	7	ROM	B521	DL24Ø
23	S4264C	8192	8	SC	MNX	450n	1.0	0.0	5.0	.80	2.0	10uΔ	.40	0	7	TOM	B483	DL24b
24	S4264D	8192	8	SC	MNX	450n	1.0	0.0	5.0	.80	2.0	10uΔ	.40	0	7	ROM	B483	DL24u
25	S4264P	8192	8	SC	MNX	450n	1.0	0.0	5.0	.80	2.0	10uΔ	.40	0	7	ROM	B483	DL24t
26	SBB2664D	8192	8	SC	MNX	450n	1.0 Ø		7.0	0.80	2.0§	3.2m	0.40	0	7	ROM	B521	DL24ev
27	SBB2664E	8192	8	SC	MNX	450n	1.0 Ø		7.0	0.80	2.0§	3.2m	0.40	0	7	ROM	B521	DL24fq
28	SBB2664P	8192	8	SC	MNX	450n	1.0 Ø		7.0	0.80	2.0§	3.2m	0.40	0	7	ROM	B521	DL24go
29	S4264	8192	8	SC	MXX	350n	725m	0.0	5.0	.80	2.2§	8.0m	.40	0	7	VMOS ROM	B399	DLØ
30	M5L2764K2	8192	8	SE	MNG	200n	866m	0.0	5.0	0.8	2.0	2.1m	0.45	0	7		B529	DL28ae
31	M5L2764K3	8192	8	SE	MNG	300n	866m	0.0	5.0	0.8	2.0	2.1m	0.45	0	7		B529	DL28ae
32	MCM68A764C	8192	8	SE	MNG	350n	800m	0.0	5.0	.80	2.0	10uΔ	5.2	0	7	EPROM	B438	DL24m
33	MCM68A764L	8192	8	SE	MNG	350n	800m	0.0	5.0	.80	2.0	10uΔ	5.2	0	7	EPROM	B438	DL24dq
34	MCM68L764-35C	8192	8	SE	MNG	350n		0.0	5.0	.80	2.0	10uΔ	5.2	0	7	UV,ERASE,EPROM	B438	DL24m
35	MCM68L764-35L	8192	8	SE	MNG	350n		0.0	5.0	.80	2.0	10uΔ	5.2	0	7	UV,ERASE,EPROM	B438	DL24dq
36	MK2764T-8	8192	8	SE	MNG	450n	525m	0.0	5.0		§					EPROM	PN28ac	
37	SCM23C64D	8192	8	SS	MCG	300n	500m	0.0	5.0	0.8	2.2§	1.6m	0.4	5	C	PROM	D643	DL24Ø
38	SCM23C64E	8192	8	SS	MCG	300n	500m	0.0	5.0	0.8	2.2§	1.6m	0.4	4	8	PROM	D643	DL24Ø
39	SCM23C64H	8192	8	SS	MCG	300n	500m	0.0	5.0	0.8	2.2§	1.6m	0.4	5	C	PROM	D643	CHØ
40	SCM23C65D	8192	8	SS	MCG	300n	500m	0.0	5.0	0.8	2.2§	1.6m	0.4	5	C	PROM	B644	DL28Ø
41	SCM23C65E	8192	8	SS	MCG	300n	500m	0.0	5.0	0.8	2.2§	1.6m	0.4	4	8	PROM	B644	DL28Ø
42	SCM23C65H	8192	8	SS	MCG	300n	500m	0.0	5.0	0.8	2.2§	1.6m	0.4	5	C	PROM	B644	CHØ
43	IM6364IDG	8192	8	SS	MCG	600n	500u†	0.0	5.0	.80	3.0§	1.0u		4	8		A328	DL24ds
44	IM6364IJG	8192	8	SS	MCG	600n	500u†	0.0	5.0	.80	3.0§	1.0u		4	8		A328	DL24cw
45	MB8364A	8192	8	SS	MNX	250n	1.0	0.0	5.0	0.8	2.0§	3.2m	0.4	0	7	PROM	B591	DL24em
46	MB8364M	8192	8	SS	MNX	250n	1.0	0.0	5.0	0.8	2.0§	3.2m	0.4	0	7	PROM	B591	DL24ga
47	5260D	9216	9		BXD	150n	450m†	0.0	5.0	.80	2.0	6.0m	.50	5	C		B128	ML47c
48	6260D	9216	9		BXD	150n	450m†	0.0	5.0	.80	2.0	6.0m	.50	0	7		B128	ML47c
49	S23128C#ai	16384	8	SC	MNG	250n	1.0	0.0	5.0	0.8	2.0			0	6	CS	B547	DL28au
50	S23128D#ai	16384	8	SC	MNG	250n	1.0	0.0	5.0	0.8	2.0			0	6	CS	B547	DL28at
51	S23128P#ai	16384	8	SC	MNG	250n	1.0	0.0	5.0	0.8	2.0			0	6	CS	B547	DL28as
52	S3630AC	16384	8	SC	MNG	6.0u	1.0	0.0	5.0	0.8	2.0			0	7	Speech Syth	B545	DL28au
53	S3630AD	16384	8	SC	MNG	6.0u	1.0	0.0	5.0	0.8	2.0			0	7	Speech Syth	B545	DL28at
54	S3630AP	16384	8	SC	MNG	6.0u	1.0	0.0	5.0	0.8	2.0			0	7	Speech Syth	B545	DL28as
55	S3630BC	16384	8	SC	MNG	6.0u	1.0	0.0	5.0	0.8	2.0			0	7	Speech Syth	B545a	DL24ge
56	S3630BD	16384	8	SC	MNG	6.0u	1.0	0.0	5.0	0.8	2.0			0	7	Speech Syth	B545a	DL24gd
57	S3630BP	16384	8	SC	MNG	6.0u	1.0	0.0	5.0	0.8	2.0			0	7	Speech Syth	B545a	DL24gc
58	S3630A1C	16384	8	SC	MNG	10u	1.0	0.0	5.0	0.8	2.0			0	7	Speech Syth	B545	DL28au
59	S3630A1D	16384	8	SC	MNG	10u	1.0	0.0	5.0	0.8	2.0			0	7	Speech Syth	B545	DL28at
60	S3630A1P	16384	8	SC	MNG	10u	1.0	0.0	5.0	0.8	2.0			0	7	Speech Syth	B545	DL28as
61	S3630B1C	16384	8	SC	MNG	10u	1.0	0.0	5.0	0.8	2.0			0	7	Speech Syth	B545a	DL24ge
62	S3630B1D	16384	8	SC	MNG	10u	1.0	0.0	5.0	0.8	2.0			0	7	Speech Syth	B545a	DL24gd
63	S3630B1P	16384	8	SC	MNG	10u	1.0	0.0	5.0	0.8	2.0			0	7	Speech Syth	B545a	DL24gc
64	SBB23128	16384	8	SC	MNX				5.0							ROM	B504	DL28Ø
65	SCM23C128C	16384	8	SS	MCG	250n	500m	0.0	5.0	0.8	2.2§	1.6m	0.4	5	C	PROM	B645	CHØ
66	SCM23C128D	16384	8	SS	MCG	250n	500m	0.0	5.0	0.8	2.2§	1.6m	0.4	5	C	PROM	B645	DL28Ø
67	SCM23C128E	16384	8	SS	MCG	250n	500m	0.0	5.0	0.8	2.2§	1.6m	0.4	0	7	PROM	B645	DL28Ø
68	SCM23C128H	16384	8	SS	MCG	250n	500m	0.0	5.0	0.8	2.2§	1.6m	0.4	5	C	PROM	B645	DL28Ø
69	MBM27C256-30CV	32768	8	E	MCG	300n		.6	7.0	0.8	2.0§	2.1m	.45	0	7	UVEPROM	B714	LL32e
70	MBM27C256-45CV	32768	8	E	MCG	450n		.6	7.0	0.8	2.0§	2.1m	.45	0	7	UVPROM	B714	LL32e
71	MBM27C256-45Z	32768	8	E	MCG	450n		.6	7.0	0.8	2.0§	2.1m	.45	0	7	UVPROM	B663	DL28ar

SYMBOLS AND CODES EXPLAINED IN INTERPRETER

4. CHARACTER GENERATORS

IN ORDER OF (1)USE CODE(2)No.CHARACTERS (3)NO.BITS/CHAR(4)STRUCT(5)ACCESS(6)TYPE NO.

LINE No.	6 TYPE NUMBER	1 USE CODE	2 NUMBER OF CHARACTERS	3 BITS PER CHARACTER	4 NO. OF OUTPUTS	5 STRUCTURE CODE	MAX. ACCESS TIME (S)	MAX. OPER. POWER DISS. (W)	RATED POWER SUPP. SPAN NEG. (V)	RATED POWER SUPP. SPAN POS. (V)	INPUT LOGIC LEVELS MAX. '0' (V)	INPUT LOGIC LEVELS MIN. '1' (V)	MIN. OUTPUT SINK CURRENT (A)	MIN. OUTPUT SINK CURRENT @ OUT (V)	OPER TEMP RNGE CODE -	OPER TEMP RNGE CODE +	DRAWINGS FUNCTIONAL EQUIVALENT NUMBER	DRAWINGS OUTLINE
1	EA3701	DAC	64	35	7	MPX	1.5u	100m†	13	0.0	-2.0	-9.0			0	7	C4	DL24bb
2	TMS4710JL	DAC	128	35	8	MNG	450n	310m†	5.0	12	.80	3.3§	2.0m	.45	0	7	C70	DL24de
3	TMS4710NL	DAC	128	35	8	MNG	450n	310m†	5.0	12	.80	3.3§	2.0m	.45	0	7	C70	DL24bw
4	S8327	DAR	64	35	5		300n	465m	12	5.0	.50	3.7			0	7	C1	ML21c
5	RO1-2240	DAR	64	35	5	MPT	500n	250m	25	0.0	-1.5♦	-24			0	7	C9	ML47
6	EA3501	DAR	64	35	5	MPX	850n	90m†	13	0.0	-2.0	-9.0			5	8	C3	DL24bb
7	EA3513	DAR	64	35	5	MPX	850n	90m†	13	0.0	-2.0	-9.0			5	8	C3	DL24bb
8	FDR116Z1	DAR	64	35	5	MPX	850n	90m†	14	0.0	-9.0	-2.0			5	8	C7	DL24bb
9	FDR116Z2	DAR	64	35	5	MPX	850n	90m†	14	0.0	-9.0	-2.0			5	8	C7	DL24bb
10	HROM2561-2	DAR	64	35	5	MPX	600n	50m†	0.0	10	.40	4.0	3.3m$	2.4	5	C	C29	ML91
11	EA3001#1	DAS	64	17	9	MPX												DL24bb
12	FDR106Z1#1	DAS	64	17	9	MPX	1.0u	90m†	14	0.0	-9.0	-2.0			5	8	B122	ML118c
13	1311	DAS	64	35	5	MPG	400n	560m	9.0	5.0	-4.2	-2.0	1.6m	.45	0	7	C23	
14	FDR106Z1#2	DAT	64	22	4	MPX	1.0u	90m†	14	0.0	-9.0	-2.0			5	8	B122	ML118c
15	MCS2024#1	DCC	128	63	9	MPX	160n	300m	5.0	5.0	.80	3.5	1.6m	.40	2	8	C44	DLØ
16	MCS2020#1	DCR	32	70	7	MPX	160n	200m	5.0	5.0	.80	3.5	1.6m	.40	2	8	C34	DLØ
17	MCS2018#1	DCR	32	120	10	MPX	160n	200m	5.0	5.0	.80	3.5	1.6m	.40	2	8	C33	DLØ
18	MCS2017#1	DCR	64	63	7	MPX	160n	200m	5.0	5.0	.80	3.5	1.6m	.40	2	8	C32	DLØ
19	MCS2025#1	DCR	64	120	10	MPX	160n	300m	5.0	5.0	.80	3.5	1.6m	.40	2	8	C45	DLØ
20	MCS2022#1	DCR	128	63	7	MPX	160n	300m	5.0	5.0	.80	3.5	1.6m	.40	2	8	C43	DLØ
21	FDR106Z1#3	DNS	14	7	7	MPX	1.0u	90m†	14	0.0	-9.0	-2.0			5	8	B122	ML118c
22	MCM1130L#2	SAC	32	70	14	MPX	500n	400m	14	14	.30	-16	1.0u△		2	8	§	ML96
23	MK2000P#2	SAC	32	70	14	MPX	700n	84m	28	0.0	-3.0*	-11	2.0m	-2.0	2	8	C10a	DL28a
24	MK2002P#2	SAC	32	70	14	MPX	700n	435m♦Ø	14	0.0	0.0†	-11			2	8	C10	DL28a
25	uPD474D02	SAC	64	7	9	MNX	315n	704m♦	5.0	12	.80	3.0§	1.7m	.50	1	7	C63	DL28k
26	uPD473D02	SAC	64	9	7	MNX	315n	704m♦	5.0	12	.80	3.0§	1.7m	.50	1	7	C62	DL28k
27	uPD473D04	SAC	64	9	7	MNX	315n	704m♦	5.0	12	.80	3.0§	1.7m	.50	1	7	C62	DL28k
28	5056J	SAC	64	35	7	BTD	175n	850m	0.0	5.0	.80	2.0△	8.0m	.50	5	C	C52	DL24cn
29	5156J	SAC	64	35	7	BTD	175n	900m	0.0	5.0	.80	2.0§	8.0m	.50	5	C	C52	DL24cn
30	6056N	SAC	64	35	7	BTD	100n	850m	0.0	5.0	.80	2.0△	10m	.50	0	7	C52	DL24co
31	6156N	SAC	64	35	7	BTD	100n	900m	0.0	5.0	.80	2.0§	10m	.50	0	7	C52	DL24co
32	MCS1004	SAC	64	35	7	MPC	950n	450mØ	12	12	-3.0	-9.0			2	8	C28a	
33	MCS1005	SAC	64	35	7	MPC	950n	450mØ	12	12	-3.0	-9.0			2	8	C28b	
34	MCS2028	SAC	64	35	7	MPC		450m	12	5.0	.80	3.5	1.6m	.40	2	7		
35	MCS2001	SAC	64	35	7	MPN	800n	450mØ	12	5.0	.80	3.5			2	8	PN24y	
36	MCM1130L#1	SAC	64	35	7	MPX	500n	400m	14	14	.30	-16	1.0u△		2	8	§	DL24w
37	MCM1131L	SAC	64	35	7	MPX	500n	400m	14	14	.30	-16	1.0u△	-14	2	8	C28	DL24w
38	MCM1132L	SAC	64	35	7	MPX	500n	400m	14	14	.30	-16	1.0u△	-14	2	8	C28a	ML96
39	MK2000P#1	SAC	64	35	7	MPX	700n	84m	28	0.0	-3.0*	-11	2.0m	-2.0	2	8	C10	DL28a
40	MK2002P	SAC	64	35	7	MPX	700n	84m	28	0.0	-3.0*	-11	2.0m	-2.0	2	8	C10	DL28a
41	MK2002P#1	SAC	64	35	7	MPX	700n	435m♦Ø	14	0.0	0.0†	-11			2	8	C10	DL28a
42	RO5-2240S	SAC	64	35	7	MPX	1.5u	680m	12	5.0	.80	3.5	1.6	.40	0	7	C65	DL24cr
43	TMS4103JC	SAC	64	35	7	MPX	700n	400mØ	28	0.0	-3.0	-9.0			2	8	C16	ML211
44	TMS4103NC	SAC	64	35	7	MPX	700n	400mØ	28	0.0	-3.0	-9.0			2	8	C16	ML83b
45	UC7541-03	SAC	64	35	7	MPX	700n	200m†Ø	12	12	-3.0	-11	2.0m	-4.0	2	8	C16	ML24
46	RO3-2516	SAC	64	35	8	MNI	500n	150m†	0.0	5.0	.65	2.2§	1.6m	.45	0	7	C60a	
47	2516IXCM2150	SAC	64	48	8	MPG	500n	730m	12	5.0	.60	3.4§	1.6m	.40	0	7	C15b	DL24ab
48	2516NXCM2150	SAC	64	48	8	MPG	500n	730m	12	5.0	.60	3.4§	1.6m	.40	0	7	C15b	DL24ar
49	2516I	SAC	64	48	8	MPX	600n	730m⊠	12	5.0	.60	3.4§	1.6m	.50	0	7	C77	DL24dk
50	S8771D	SAC	64	63	10	MPI	450n		12	5.0	.60	4.0			0	6	B109a	ML13b
51	5074J	SAC	64	63	9	BTD	150n	850m	0.0	5.0	.80	2.0△	6.0m	.50	5	C	C58	DL24cn
52	5174J	SAC	64	63	9	BTD	150n	900m	0.0	5.0	.80	2.0§	6.0m	.50	5	C	C58	DL24cn
53	6074N	SAC	64	63	9	BTD	125n	850m	0.0	5.0	.80	2.0△	8.0m	.50	0	7	C58	DL24co
54	6174N	SAC	64	63	9	BTD	125n	900m	0.0	5.0	.80	2.0§	8.0m	.50	0	7	C58	DL24co
55	EA4001	SAC	64	63	9	MPX	725n	60u%	30	.50	-2.0	-9.0			5	8	C5	DL24bb
56	FDR146BZ1	SAC	64	80	10	MPX	725n	300m†	28	0.0	-9.0	-2.0	1.6m	.40	5	8	E13	DL24ag
57	FDR146Z1	SAC	64	80	10	MPX	725n	300m†	28	0.0	-9.0	-2.0	1.6m	.40	5	8	E13	DL24bb
58	RO5-5184	SAC	64	81	9	MPX	3.5u	250m†	12	5.0	.80	3.5§	1.6	.40	0	7	C66	DL24cr
59	5062J	SAC	128	35	7	BTD	175n	850m	0.0	5.0	.80	2.0△	8.0m	.50	5	C	C54	DL24cn
60	5162J	SAC	128	35	7	BTD	175n	900m	0.0	5.0	.80	2.0§	8.0m	.50	5	C	C54	DL24cn
61	6062N	SAC	128	35	7	BTD	100n	850m	0.0	5.0	.80	2.0△	10m	.50	0	7	C54	DL24co
62	6162N	SAC	128	35	7	BTD	100n	900m	0.0	5.0	.80	2.0§	10m	.50	0	7	C54	DL24co
63	NC6591P#7	SAC	128	49	7	MNA	800n	405m	5.0	12	.80	3.0	1.6m	.40	0	7	B144	DL24q
64	5073J	SAC	128	63	9	BTD	150n	850m	0.0	5.0	.80	2.0△	6.0m	.50	5	C	C57	DL24cn
65	5173J	SAC	128	63	9	BTD	150n	900m	0.0	5.0	.80	2.0§	6.0m	.50	5	C	C57	DL24cn
66	6073N	SAC	128	63	9	BTD	125n	850m	0.0	5.0	.80	2.0△	8.0m	.50	0	7	C57	DL24co
67	6173N	SAC	128	63	9	BTD	125n	900m	0.0	5.0	.80	2.0§	8.0m	.50	0	7	C57	DL24co
68	NC6581L	SAC	128	63	9	MNA	400n	700m†	3.0	12	.80	3.0	1.6m	.40	0	7	C51	DL24q
69	NC6581P	SAC	128	63	9	MNA	400n	700m†	3.0	12	.80	3.0	1.6m	.40	0	7	C51	DL24q
70	NC6583L	SAC	128	63	9	MNA	400n	700m†	3.0	12	.80	3.0	1.6m	.40	0	7	C51	DL24g
71	NC6583P	SAC	128	63	9	MNA	400n	700m†	3.0	12	.80	3.0	1.6m	.40	0	7	C51	DL24g
72	NCM6581L	SAC	128	64	10	MNX	400n	700m†	3.0	12	.80	3.0	1.6m	.40	0	7	C51	DL24ef
73	NCM6581P	SAC	128	64	10	MNX	400n	700m†	3.0	12	.80	3.0	1.6m	.40	0	7	C51	DL24ef
74	MCM6581L	SAC	128	64	9	MNX	400n	800m	3.0	12	.80	4.0	1.6m	.40	0	7	C51	DL24d
75	MCM6581P	SAC	128	64	9	MNX	400n	800m	3.0	12	.80	4.0	1.6m	.40	0	7	C51	DL24br
76	MCM6583L	SAC	128	64	9	MNX	400n	800m	3.0	12	.80	4.0	1.6m	.40	0	7	C51	DL24d
77	MCM6583P	SAC	128	64	9	MNX	400n	800m	3.0	12	.80	4.0	1.6m	.40	0	7	C51	DL24br
78	CM2900-01%	SAR	32	35	5	BTX	40n	600m	0.0	5.0	.80	2.0	16m	.40	0	7	PN24fg	
79	CM2900-02%	SAR	32	35	5	BTX	40n	600m	0.0	5.0	.80	2.0	16m	.40	0	7	PN24fg	
80	CM2901CDE0005	SAR	32	35	5	BTX	80n	500m	0.0	5.0	.80	2.0	16m	.40	0	7	C30	ML84a
81	CM2901CDE0008	SAR	32	35	5	BTX	80n	500m	0.0	5.0	.80	2.0	16m	.40	0	7	C30	ML84a
82	S8614#3	SAR	64	7	5	MPI	500n	595m	12	5.0	.60	3.7			0	7	C48	DL24a
83	S8866	SAR	64	7	9	MPI	450n	1.0	12	5.0	.60	4.0			0	7	C49	ML13b
84	MF7107	SAR	64	9	7	MPG	350n	1.0 ⊠	9.0	5.0	.80	3.0	1.6m	.40	0	7	C46	ML8
85	S8564#2	SAR	64	9	7	MPI	450n	1.0	12	5.0	.60	4.0			0	6	C47	ML13b
86	S8564A	SAR	64	9	7	MPI	450n		12	5.0	.60	4.0			0	6	C47	ML13b
87	MK2408P	SAR	64	35	10	MPI	600n	425m	12	5.0	.80	-1.5	1.6m	.40	0	7		DL28a
88	ME511	SAR	64	35	5			254m♦	8.9	12	.40%	2.4			0	7	C22	ML44
89	5055J	SAR	64	35	5	BTD	175n	850m	0.0	5.0	.80	2.0△	8.0m	.50	5	C	C59	DL18q
90	5155J	SAR	64	35	5	BTD	175n	900m	0.0	5.0	.80	2.0§	8.0m	.50	5	C	C59	DL18q
91	6055N	SAR	64	35	5	BTD	100n	850m	0.0	5.0	.80	2.0△	10m	.50	0	7	C59	DL18bd
92	6155N	SAR	64	35	5	BTD	100n	900m	0.0	5.0	.80	2.0§	10m	.50	0	7	C59	DL18bd
93	S8773B	SAR	64	35	5	MPI	550n	595m	12	5.0	.60	3.7			0	6	C48	DL24a
94	CRC3504-1-2	SAR	64	35	5	MPN	800n	400m⊠	12	5	.50	4.3	2.0m	.40	2	8	C35	ML13
95	CRC3504-2-2	SAR	64	35	5	MPN	800n	400m⊠	12	5	.50	4.3	2.0m	.40	2	8	C36	FL4
96	CRC3505-1-2	SAR	64	35	5	MPN	800n	400m⊠	12	5	.50	4.3	2.0m	.40	2	8	C35	ML13
97	CRC3505-2-2	SAR	64	35	5	MPN	800n	400m⊠	12	5	.50	4.3	2.0m	.40	2	8	C36	FL4
98	MCS2000	SAR	64	35	5	MPN	800n	450mØ	12	5.0	.80	3.5			2	8	PN24z	
99	EA4501	SAR	64	35	5	MPX	725n		12	12	10	3.0	1.6m	.40	5	8	C5a	DL24bb
100	EA4501-1	SAR	64	35	5	MPX	600n		12	12	10	3.0	1.6m	.40	5	8	C5a	DL8c
101	EA4501SJ1	SAR	64	35	5	MPX	600n		12	12	10	3.0	1.6m	.40	0	7	C5b	DL8c
102	EA4501SJ	SAR	64	35	5	MPX	725n		12	12	10	3.0	1.6m	.40	0	7	C5b	DL24bb
103	GER543W1	SAR	64	35	5	MPX	500n	350m†Ø	5.0	5.0	1.0♦	4.0					C20	ML30
104	MCM1121L	SAR	64	35	5	MPX	700n	450m†Ø	28	0.0	-9.0	-2.5	1.0u△	-14	2	8	C27	ML96
105	MCM1122L	SAR	64	35	5	MPX	700n	450m†Ø	28	0.0	-9.0	-2.5	1.0u△	-14	2	8	C27	ML96
106	MK2101P	SAR	64	35	5	MPX	550n	600mØ	15	12	-2.0*	-10	6.0	-12	2	8	C11	DL16i
107	MK3101P	SAR	64	35	5	MPX	550n	600m♦Ø	15	12	2.0*	-10	6.0m	-12	2	8	C13	ML21
108	TMS2403JC	SAR	64	35	5	MPX	1.0u	350m†♦	12	12	-3.0	-9.0			2	8	C6	ML49
109	TMS2501JC	SAR	64	35	5	MXX	400n	400m	12	5.0	1.0	3.5	3.2m	.80	2	8	B64	DL24de
110	TMS2501NC	SAR	64	35	5	MXX	400n	400m	12	5.0	1.0	3.5	3.2m	.80	2	8	B64	DL24bw

SYMBOLS AND CODES EXPLAINED IN INTERPRETER

4. CHARACTER GENERATORS

IN ORDER OF (1)USE CODE(2)No.CHARACTERS (3)NO.BITS/CHAR(4)STRUCT(5)ACCESS(6)TYPE NO.

LINE No.	6 TYPE NUMBER	1 USE CODE	2 NUMBER OF CHARACTERS	3 BITS PER CHARACTER	4 NO. OF OUTPUTS	5 STRUCTURE CODE	MAX. ACCESS TIME (S)	MAX. OPER. POWER DISS. (W)	RATED POWER SUPP. SPAN NEG. (V)	RATED POWER SUPP. SPAN POS. (V)	INPUT LOGIC LEVELS MAX. '0' (V)	INPUT LOGIC LEVELS MIN. '1' (V)	MIN. OUTPUT SINK CURRENT (A)	MIN. OUTPUT SINK CURRENT @ OUT (V)	OPER TEMP RNGE CODE -	OPER TEMP RNGE CODE +	DRAWINGS FUNCTIONAL EQUIVALENT NUMBER	DRAWINGS OUTLINE
1	UA3540D4	SAR	64	35	5	MXX	600n	540m	15	5.0	.80♦	2.6	2.0u△	-5.0	2	7	B9g	DL24ay
2	UA3540D8	SAR	64	35	5	MXX	600n	540m	15	5.0	.80♦	2.6	2.0u△	-5.0	2	7	B9h	DL28b
3	MK2302P	SAR	64	35	7	MPI	1.0u	40m	12	5.0	.60	3.5	2.0m	.40	0	7	C12	ML21
4	TMS4177JC	SAR	64	35	7	MPX	700n	400mØ	28	0.0	-3.0	-9.0			2	8	C16	ML49a
5	TMS4177JC%	SAR	64	35	7	MPX	700n	400mØ	28	0.0	-3.0	-9.0			2	8	C16	ML49a
6	TMS4177NC%	SAR	64	35	7	MPX	700n	400mØ	28	0.0	-3.0	-9.0			2	8	C16	ML83
7	TMS4178JC	SAR	64	35	7	MPX	700n	400mØ	28	0.0	-3.0	-9.0			2	8	C16	ML49a
8	TMS4178JC%	SAR	64	35	7	MPX	700n	400mØ	28	0.0	-3.0	-9.0			2	8	C16	ML49a
9	TMS4178NC%	SAR	64	35	7	MPX	700n	400mØ	28	0.0	-3.0	-9.0			2	8	C16	ML83
10	2513NXCM2140	SAR	64	40	5	MPG	500n	730m	12	5.0	.60	3.4§	1.6m	.40	0	7	C15	DL24ar
11	2513I	SAR	64	40	5	MPX	600n	730mØ	12	5.0	.60	3.4§		.40	0	7	C76	DL24dk
12	2513N	SAR	64	40	5	MPX	600n	730mØ	12	5.0	.60	3.4§		.40	0	7	C76	DL24ar
13	DM7678J	SAR	64	63	1	BTX	50n	500m†Ø	0.0	5.0	.40%	2.4	16m	.40	5	C	C68	DL16cr
14	DM7679J	SAR	64	63	1	BTX	50n	500m†Ø	0.0	5.0	.40%	2.4	16m	.40	5	C	C69	DL16cr
15	DM8679J	SAR	64	63	1	BTX	50n	500m†Ø	0.0	5.0	.40%	2.4	16m	.40	0	7	C69	DL16cr
16	DM8679N	SAR	64	63	1	BTX	50n	500m†Ø	0.0	5.0	.40%	2.4	16m	.40	0	7	C69	DL16bh
17	5071J	SAR	64	63	7	BTD	150n	850m	0.0	5.0	.80	2.0△	6.0m	.50	5	C	C55	DL24cn
18	5171J	SAR	64	63	7	BTD	150n	900m	0.0	5.0	.80	2.0§	6.0m	.50	5	C	C55	DL24cn
19	6071N	SAR	64	63	7	BTD	125n	850m	0.0	5.0	.80	2.0△	8.0m	.50	0	7	C55	DL24co
20	6171N	SAR	64	63	7	BTD	125n	900m	0.0	5.0	.80	2.0§	8.0m	.50	0	7	C55	DL24co
21	MM4220NPJ	SAR	64	63	7	MPX	650n	300mØ	12	12	10*	4.0			5	C	B26a	DL24cc
22	MM4230NNJ	SAR	64	63	7	MPX	725n	960mØ	12	12	10*	4.0			5	C	B26	DL24cc
23	MM4230NOJ	SAR	64	63	7	MPX	725n	960mØ	12	12	10*	4.0			5	C	B26	DL24cc
24	MM5220NPJ	SAR	64	63	7	MPX	650n	300mØ	12	12	10*	4.0			2	7	B26a	DL24cc
25	MM5220NPN	SAR	64	63	7	MPX	650n	300mØ	12	12	10*	4.0			2	7	B26a	DL24au
26	MM5230NNJ	SAR	64	63	7	MPX	725n	960mØ	12	12	10*	4.0			2	7	B26	DL24cc
27	MM5230NNN	SAR	64	63	7	MPX	725n	960mØ	12	12	10*	4.0			2	7	B26	DL24au
28	MM5230NOJ	SAR	64	63	7	MPX	725n	960mØ	12	12	10*	4.0			2	7	B26	DL24cc
29	MM5230NON	SAR	64	63	7	MPX	725n	960mØ	12	12	10*	4.0			2	7	B26	DL24au
30	FDR146BZ2	SAR	128	35	10	MPX	725n	300m†	28	0.0	-9.0	-2.0	1.6m	.40	5	8	E13	DL24ag
31	FDR146Z2	SAR	128	35	10	MPX	725n	300m†	28	0.0	-9.0	-2.0	1.6m	.40	5	8	E13	DL24bb
32	EA4004	SAR	128	35	10§	MPX	725n	450m	12	12	10	3.0	1.6m	.40	5	8	C41	DL24bb
33	5061J	SAR	128	35	5	BTD	175n	850m	0.0	5.0	.80	2.0△	8.0m	.50	5	C	C53	DL24cn
34	5161J	SAR	128	35	5	BTD	175n	900m	0.0	5.0	.80	2.0§	8.0m	.50	5	C	C53	DL24cn
35	6061N	SAR	128	35	5	BTD	100n	850m	0.0	5.0	.80	2.0△	10m	.50	0	7	C53	DL24co
36	6161N	SAR	128	35	5	BTD	100n	900m	0.0	5.0	.80	2.0§	10m	.50	0	7	C53	DL24co
37	MCM6674L	SAR	128	35	5	MNG	350n	650m	0.0	5.0	.80	2.0	1.6m	.40	0	7	C64	DL18an
38	uPD472D01	SAR	128	35	5	MNX	315n	400m†	5.0	12	.80	3.0	1.6m	.40	0	7	C71	DL28k
39	5072J	SAR	128	63	7	BTD	150n	850m	0.0	5.0	.80	2.0△	6.0m	.50	5	C	C56	DL24cn
40	5172J	SAR	128	63	7	BTD	150n	900m	0.0	5.0	.80	2.0§	6.0m	.50	5	C	C56	DL24cn
41	6072N	SAR	128	63	7	BTD	125n	850m	0.0	5.0	.80	2.0△	8.0m	.50	0	7	C56	DL24co
42	6172N	SAR	128	63	7	BTD	125n	900m	0.0	5.0	.80	2.0§	8.0m	.50	0	7	C56	DL24co
43	NC6571AL	SAR	128	63	7	MNA	500n	600m†	3.0	12	.80	3.0	1.6m	.40	0	7	C50	DLØ
44	NC6571AP	SAR	128	63	7	MNA	500n	600m†	3.0	12	.80	3.0	1.6m	.40	0	7	C50	DLØ
45	NC6571L	SAR	128	63	7	MNA	500n	600m†	3.0	12	.80	3.0	1.6m	.40	0	7	C50	DL24g
46	NC6571P	SAR	128	63	7	MNA	500n	600m†	3.0	12	.80	3.0	1.6m	.40	0	7	C50	DL24g
47	NC6572L	SAR	128	63	7	MNA	500n	600m†	3.0	12	.80	3.0	1.6m	.40	0	7	C50	DL24q
48	NC6572P	SAR	128	63	7	MNA	500n	600m†	3.0	12	.80	3.0	1.6m	.40	0	7	C50	DL24q
49	NC6573L	SAR	128	63	7	MNA	500n	600m†	3.0	12	.80	3.0	1.6m	.40	0	7	C67	DL24g
50	NC6573P	SAR	128	63	7	MNA	500n	600m†	3.0	12	.80	3.0	1.6m	.40	0	7	C67	DL24g
51	NC6574L	SAR	128	63	7	MNA	500n	600m†	3.0	12	.80	3.0	1.6m	.40	0	7	C67	DL24g
52	NC6574P	SAR	128	63	7	MNA	500n	600m†	3.0	12	.80	3.0	1.6m	.40	0	7	C67	DL24g
53	NC6575L	SAR	128	63	7	MNA	500n	600m†	3.0	12	.80	3.0	1.6m	.40	0	7	C67	DL24g
54	NC6575P	SAR	128	63	7	MNA	500n	600m†	3.0	12	.80	3.0	1.6m	.40	0	7	C67	DL24g
55	NC6576L	SAR	128	63	7	MNA	500n	600m†	3.0	12	.80	3.0	1.6m	.40	0	7	C67	DL24g
56	NC6576P	SAR	128	63	7	MNA	500n	600m†	3.0	12	.80	3.0	1.6m	.40	0	7	C67	DL24g
57	MCM66751C	SAR	128	63	7	MNG	350n	440m	0.0	5.0	.80	2.0	1.6m	.40	0	7	C72	DL24cq
58	MCM66751P	SAR	128	63	7	MNG	350n	440m	0.0	5.0	.80	2.0	1.6m	.40	0	7	C72	DL24br
59	MCM6571AL	SAR	128	63	7	MNX	500n	800m	3.0	12	.80	4.0	1.6m	.40	0	7	C72a	DL24e
60	MCM6571AP	SAR	128	63	7	MNX	500n	800m	3.0	12	.80	4.0	1.6m	.40	0	7	C72a	DL24br
61	MCM6571L	SAR	128	63	7	MNX	500n	800m	3.0	12	.80	4.0	1.6m	.40	0	7	C72a	DL24e
62	MCM6571P	SAR	128	63	7	MNX	500n	800m	3.0	12	.80	4.0	1.6m	.40	0	7	C72a	DL24e
63	MCM6572L	SAR	128	63	7	MNX	500n	800m	3.0	12	.80	4.0	1.6m	.40	0	7	C72a	DL24e
64	MCM6572P	SAR	128	63	7	MNX	500n	800m	3.0	12	.80	4.0	1.6m	.40	0	7	C72a	DL24br
65	MCM6573L	SAR	128	63	7	MNX	500n	800m	3.0	12	.80	4.0	1.6m	.40	0	7	C72a	DL24e
66	MCM6573P	SAR	128	63	7	MNX	500n	800m	3.0	12	.80	4.0	1.6m	.40	0	7	C72a	DL24br
67	MCM6574L	SAR	128	63	7	MNX	500n	800m	3.0	12	.80	4.0	1.6m	.40	0	7	C72a	DL24e
68	MCM6574P	SAR	128	63	7	MNX	500n	800m	3.0	12	.80	4.0	1.6m	.40	0	7	C72a	DL24br
69	MCM6575L	SAR	128	63	7	MNX	500n	800m	3.0	12	.80	4.0	1.6m	.40	0	7	C72a	DL24e
70	MCM6575P	SAR	128	63	7	MNX	500n	800m	3.0	12	.80	4.0	1.6m	.40	0	7	C72a	DL24br
71	MCM6576L	SAR	128	63	7	MNX	500n	800m	3.0	12	.80	4.0	1.6m	.40	0	7	C72a	DL24e
72	MCM6576P	SAR	128	63	7	MNX	500n	800m	3.0	12	.80	4.0	1.6m	.40	0	7	C72a	DL24br
73	MCM6577L	SAR	128	63	7	MNX	500n	800m	3.0	12	.80	4.0	1.6m	.40	0	7	C72a	DL24e
74	MCM6577P	SAR	128	63	7	MNX	500n	800m	3.0	12	.80	4.0	1.6m	.40	0	7	C72a	DL24br
75	MCM6578L	SAR	128	63	7	MNX	500n	800m	3.0	12	.80	4.0	1.6m	.40	0	7	C72a	DL24e
76	MCM6578P	SAR	128	63	7	MNX	500n	800m	3.0	12	.80	4.0	1.6m	.40	0	7	C72a	DL24br
77	MCM6579L	SAR	128	63	7	MNX	500n	800m	3.0	12	.80	4.0	1.6m	.40	0	7	C72a	DL24e
78	MCM6579P	SAR	128	63	7	MNX	500n	800m	3.0	12	.80	4.0	1.6m	.40	0	7	C72a	DL24br
79	TMS4886JC	SAS	64	25	5	MPX	800n	450mØ	12	12	-3.0	-9.0			2	8	C21	DL40a
80	1312	SAS	64	35	5	MPG	900n	700m	9.0	5.0	-4.2	-2.0	1.6m	.45	0	7	C24	
81	1313	SAS	64	35	5	MPG	900n	700m	9.0	5.0	-4.2	-2.0	1.6m	.45	0	7	C25	ML2a
82	S8499#2	SAS	64	35	7	MPA	2.0u	650m	13	13	4.0	11			0	7	B92	ML13b
83	2526I#1	SAS	64	81	9	MPG	700n	730mØ	12	5.0	.60	3.4	1.6m	.50	0	7	B370	ML174
84	2526N#1	SAS	64	81	9	MPG	700n	730mØ	12	5.0	.60	3.4	1.6m	.50	0	7	B370	DL24ar
85	M200M1AA	SBC	16	64	8	MPX	4.0u	150m†	27	0.0	-2.0	-9.0	1.0u△	20	0	7	B57	DL24bd
86	M200M1XX	SBC	16	64	8	MPX	4.0u	150m†	27	0.0	-2.0	-9.0	1.0u	20	0	7	B57	DL24bd
87	NCM6583L	SBC	128	64	10	MNX	400n	700m†	3.0	12	.80	3.0	1.6m	.40	0	7	C87	DL24g
88	NCM6583P	SBC	128	64	10	MNX	400n	700m†	3.0	12	.80	3.0	1.6m	.40	0	7	C87	DL24g
89	TMS4100JC	SCA	64	35	7	MPX	950n	450m	28	0.0	-10	-3.0	10u	-14	2	8	C16	ML211
90	TMS4100NC	SCA	64	35	7	MPX	950n	450m	28	0.0	-10	-3.0	10u	-14	2	8	C16	ML83b
91	uPD473D	SCA	64	63	7	MNX	315n	400m†	5.0	12	.80	3.0	1.6m	.40	0	7	C62	DL28k
92	6292N	SCA	128	81	9	BTD	125n	850m	0.0	5.0	.80	2.0△	8.0m	.50	0	7	PN24fj	DL24co
93	6293N	SCA	128	81	9	BTD	125n	900m	0.0	5.0	.80	2.0§	8.0m	.50	0	7	PN24fj	DL24co
94	5299	SCA	128	81	9	BTX	175n	450m†	0.0	5.0	.80	2.0	6.0m	.50	5	C	PN24fj	ML47c
95	6299	SCA	128	81	9	BTX	175n	450m†	0.0	5.0	.80	2.0	6.0m	.50	0	7	PN24fj	ML47c
96	MP301B#2	SCC	32	70	14	MXX	600n	600mØ	12	0.0			10u♦	.12	2	7	C2a	ML13
97	uPD474D01	SCC	64	7	9	MNX	315n	704m♦	5.0	12	.80	3.0§	1.7m	.50	1	7	C63	DL28k
98	uPD473D03	SCC	64	9	7	MNX	315n	704m♦	5.0	12	.80	3.0§	1.7m	.50	1	7	C62	DL28k
99	MCS1004A	SCC	64	35	7	MPC	700n	350mØ	28	0.0	-3.0	-9.0			2	8	C28a	
100	MP301B#1	SCC	64	35	7	MXX	600n	500mØ	12	0.0			10u♦	.12	2	7	C2	ML13
101	2516IXCMXXXX	SCC	64	48	8	MPG	500n	730m	12	5.0	.60	3.4§	1.6m	.40	0	7	C15b	DL24ab
102	2516NXCMXXXX	SCC	64	48	8	MPG	500n	730m	12	5.0	.60	3.4§	1.6m	.40	0	7	C15b	DL24ar
103	MM4241D	SCC	64	48	8	MPX	900n	629mØ	12	5.0	1.0	3.0§	1.6m	.40	5	C	C42	DL24at
104	MM4241J	SCC	64	48	8	MPX	900n	629mØ	12	5.0	1.0	3.0§	1.6m	.40	5	C	C42	DL24cc
105	MM4241N	SCC	64	48	8	MPX	900n	629mØ	12	5.0	1.0	3.0§	1.6m	.40	5	C	C42	DL24af
106	MM5241D	SCC	64	48	8	MPX	900n	629mØ	12	5.0	1.0	3.0§	1.6m	.40	2	7	C42	DL24at
107	MM5241J	SCC	64	48	8	MPX	900n	629mØ	12	5.0	1.0	3.0§	1.6m	.40	2	7	C42	DL24cc
108	MM5241N	SCC	64	48	8	MPX	900n	629mØ	12	5.0	1.0	3.0§	1.6m	.40	2	7	C42	DL24af
109	uPD474D	SCC	64	63	9	MNX	315n	400m†	5.0	12	.80	3.0	1.6m	.40	0	7	C63	DL28k
110	NC6580L	SCC	128	63	9	MNA	400n	700m†	3.0	12	.80	3.0	1.6m	.40	0	7	C51	DL24q

SYMBOLS AND CODES EXPLAINED IN INTERPRETER

4. CHARACTER GENERATORS

IN ORDER OF (1)USE CODE(2)No.CHARACTERS (3)NO.BITS/CHAR(4)STRUCT(5)ACCESS(6)TYPE NO.

LINE No.	6 TYPE NUMBER	1 USE CODE	2 NUMBER OF CHARACTERS	3 BITS PER CHARACTER	4 NO. OF OUTPUTS	5 STRUCTURE CODE	MAX. ACCESS TIME (S)	MAX. OPER. POWER DISS. (W)	RATED POWER SUPP. SPAN NEG. (V)	RATED POWER SUPP. SPAN POS. (V)	INPUT LOGIC LEVELS MAX. '0' (V)	INPUT LOGIC LEVELS MIN. '1' (V)	MIN. OUTPUT SINK CURRENT (A)	MIN. OUTPUT SINK CURRENT @ OUT (V)	OPER TEMP RNGE CODE -	OPER TEMP RNGE CODE +	DRAWINGS FUNCTIONAL EQUIVALENT NUMBER	DRAWINGS OUTLINE
1	NC6580P	SCC	128	63	9	MNA	400n	700m†	3.0	12	.80	3.0	1.6m	.40	0	7	C51	DL24q
2	MCM6580L	SCC	128	64	9	MNX	400n	800m	3.0	12	.80	4.0	1.6m	.40	0	7	C51	DL24d
3	MCM6580P	SCC	128	64	9	MNX	400n	800m	3.0	12	.80	4.0	1.6m	.40	0	7	C51	DL24br
4	uPD473D01	SCR	64	9	7	MNX	315n	704m♦	5.0	12	.80	3.0§	1.7m	.50	1	7	C62	DL28k
5	2513NXCMXXXX#1	SCR	64	35	5	MPG	500n	730m	12	5.0	.60	3.4§	1.6m	.40	0	7	C15	DL24ar
6	MCM1120L	SCR	64	35	5	MPX	700n	450m†Ø	28	0.0	-9.0	-2.5	1.0uΔ	-14	2	8	C27	ML96
7	TMS2400JC	SCR	64	35	5	MPX	1.2u	450m†Ø	28	0.0	-3.0	-9.0	500uØ	-.70	2	8	C6	ML49a
8	TMS2400NC	SCR	64	35	5	MPX	1.2u	450m†Ø	28	0.0	-3.0	-9.0	500uØ	-.70	2	8	C6	ML83
9	2513NXCMXXXX#2	SCR	64	40	5	MPG	500n	730m	12	5.0	.60	3.4§	1.6m	.40	0	7	C15	DL24ar
10	MM4240D	SCR	64	40	5	MPX	600n	480mØ	12	12	10*	4.0			5	C	PN24fh	DL24at
11	MM4240J	SCR	64	40	5	MPX	500n	480mØ	12	12	10*	4.0			5	C	PN24fh	DL24cc
12	MM5240D	SCR	64	40	5	MPX	600n	480mØ	12	12	10*	4.0			2	7	PN24fh	DL24at
13	MM5240J	SCR	64	40	5	MPX	500n	480mØ	12	12	10*	4.0			2	7	PN24fh	DL24cc
14	MM5240N	SCR	64	40	5	MPX	500n	480mØ	12	12	10*	4.0			2	7	PN24fh	DL24au
15	MK2300P	SCR	64	70	10	MPI	1.0u	40m	12	5.0	.60	3.5	2.0m	.40	0	7	C12	ML21
16	6290N	SCR	128	63	7	BTD	125n	850m	0.0	5.0	.80	2.0Δ	8.0m	.50	0	7	PN24fi	DL18bd
17	6291N	SCR	128	63	7	BTD	125n	900m	0.0	5.0	.80	2.0§	8.0m	.50	0	7	PN24fi	DL24co
18	5297	SCR	128	63	7	BTX	175n	450m†	0.0	5.0	.80	2.0	6.0m	.50	5	C	PN24fi	ML47c
19	6297	SCR	128	63	7	BTX	175n	450m†	0.0	5.0	.80	2.0	6.0m	.50	0	7	PN24fi	ML47c
20	NC6570AL	SCR	128	63	7	MNA	400n	600m†	5.0	12	.80	3.0	1.6m	.40	0	7	C50	DL24q
21	NC6570AP	SCR	128	63	7	MNA	400n	600m†	5.0	12	.80	3.0	1.6m	.40	0	7	C50	DL24q
22	NC6570L	SCR	128	63	7	MNA	500n	600m†	3.0	12	.80	3.0	1.6m	.40	0	7	C50	DL24g
23	NC6570P	SCR	128	63	7	MNA	500n	600m†	3.0	12	.80	3.0	1.6m	.40	0	7	C50	DL24g
24	2609F	SCR	128	63	7	MNG	500n	525m	0.0	5.0	.65	2.2	1.6m	.40	0	7	C50a	DL24ch
25	2609I	SCR	128	63	7	MNG	500n	525m	0.0	5.0	.65	2.2	1.6m	.40	0	7	C50a	DL24dk
26	2609N	SCR	128	63	7	MNG	500n	525m	0.0	5.0	.65	2.2	1.6m	.40	0	7	C50a	DL24ar
27	MCM66700L	SCR	128	63	7	MNG	350n	525m	0.0	5.0	.80	2.0	1.6m	.40	0	7	C72	DL24e
28	MCM6570L	SCR	128	63	7	MNX	500n	800m	3.0	12	.80	4.0	1.6m	.40	0	7	C72a	DL24e
29	MCM6570P	SCR	128	63	7	MNX	500n	800m	3.0	12	.80	4.0	1.6m	.40	0	7	C72a	DL24br
30	TMS4179JC	SEC	64	35	7	MPX	700n	400mØ	28	0.0	-3.0	-9.0			2	8	C16	ML49
31	TMS4179NC	SEC	64	35	7	MPX	700n	400mØ	28	0.0	-3.0	-9.0			2	8	C16	ML83
32	UC7541-79	SEC	64	35	7	MPX	700n	200m†Ø	12	12	-3.0	-11	2.0m	-4.0	2	8	C16	ML24
33	EA4016	SEC	64	80	10	MPX	725n	450m	12	12	10	3.0	1.6m	.40	5	8	C41a	DL24bb
34	MM4240ACAJ	SER	64	40	5	MPX	500n	504mØ	12	12	10*	4.0			5	C	PN24fh	DL24cc
35	MM5240ABZJ	SER	64	40	5	MPX	500n	504mØ	12	12	10*	4.0			2	7	PN24fh	DL24cc
36	MM5240ACAJ	SER	64	40	5	MPX	500n	504mØ	12	12	10*	4.0			2	7	PN24fh	DL24cc
37	MM5240ACAN	SER	64	40	5	MPX	500n	504mØ	12	12	10*	4.0			2	7	PN24fh	DL24au
38	TMS2404JC	SER	66	35	5	MPX	1.0u	350m†♦	12	12	-3.0	-9.0			2	8	C6	ML49
39	MM5240ABUN	SHR	64	40	7	MPX	500n	504mØ	12	12	10*	4.0			2	7	PN24fh	DL24au
40	HEPC3802P-RT	SNS	12	8	8	BTX	45n	240m†	0.0	5.0	.90	2.0	20m	5.25	0	7	C26	DL24r
41	MCM66710L	SPR	128	63	7	MNG	350n	525m	0.0	5.0	.80	2.0	1.6m	.40	0	7	C72	DL24e
42	MCM66714L	SPR	128	63	7	MNG	350n	525m	0.0	5.0	.80	2.0	1.6m	.40	0	7	C72	DL24e
43	MCM66720L	SPR	128	63	7	MNG	350n	525m	0.0	5.0	.80	2.0	1.6m	.40	0	7	C72	DL24e
44	MCM66730L	SPR	128	63	7	MNG	350n	525m	0.0	5.0	.80	2.0	1.6m	.40	0	7	C72	DL24e
45	MCM66734L	SPR	128	63	7	MNG	350n	525m	0.0	5.0	.80	2.0	1.6m	.40	0	7	C72	DL24e
46	MCM66740L	SPR	128	63	7	MNG	350n	525m	0.0	5.0	.80	2.0	1.6m	.40	0	7	C72	DL24e
47	MCM66750L	SPR	128	63	7	MNG	350n	525m	0.0	5.0	.80	2.0	1.6m	.40	0	7	C72	DL24e
48	MCM66760L	SPR	128	63	7	MNG	350n	525m	0.0	5.0	.80	2.0	1.6m	.40	0	7	C72	DL24e
49	MCM66770L	SPR	128	63	7	MNG	350n	525m	0.0	5.0	.80	2.0	1.6m	.40	0	7	C72	DL24e
50	MCM66780L	SPR	128	63	7	MNG	350n	525m	0.0	5.0	.80	2.0	1.6m	.40	0	7	C72	DL24e
51	MCM66790L	SPR	128	63	7	MNG	350n	525m	0.0	5.0	.80	2.0	1.6m	.40	0	7	C72	DL24e
52	NCM6580L	SXC	128	64	10	MNX	400n	700m†	3.0	12	.80	3.0	1.6m	.40	0	7	C51	DL24ef
53	NCM6580P	SXC	128	64	10	MNX	400n	700m†	3.0	12	.80	3.0	1.6m	.40	0	7	C51	DL24ef
54	NCM6571L	SXR	128	63	7	MNX	500n	600m	3.0	12	.80	3.0	1.6m	.40	0	7	C83	DL24g
55	NCM6571P	SXR	128	63	7	MNX	500n	600m	3.0	12	.80	3.0	1.6m	.40	0	7	C83	DL24g
56	NCM6572L	SXR	128	63	7	MNX	500n	600m	3.0	12	.80	3.0	1.6m	.40	0	7	C83	DL24g
57	NCM6573L	SXR	128	63	7	MNX	500n	600m	3.0	12	.80	3.0	1.6m	.40	0	7	C83	DL24g
58	NCM6573P	SXR	128	63	7	MNX	500n	600m	3.0	12	.80	3.0	1.6m	.40	0	7	C83	DL24g
59	NCM6574L	SXR	128	63	7	MNX	500n	600m†	3.0	12	.80	3.0	1.6m	.40	0	7	C83	DL24g
60	NCM6574P	SXR	128	63	7	MNX	500n	600m†	3.0	12	.80	3.0	1.6m	.40	0	7	C83	DL24g
61	NCM6575L	SXR	128	63	7	MNX	500n	600m†	3.0	12	.80	3.0	1.6m	.40	0	7	C83	DL24g
62	NCM6575P	SXR	128	63	7	MNX	500n	600m†	3.0	12	.80	3.0	1.6m	.40	0	7	C83	DL24g
63	NCM6576L	SXR	128	63	7	MNX	500n	600m†	3.0	12	.80	3.0	1.6m	.40	0	7	C83	DL24g
64	NCM6576P	SXR	128	8192	7	MNX	500n	600m†	3.0	12	.80	3.0	1.6m	.40	0	7	C88	DL24g

SYMBOLS AND CODES EXPLAINED IN INTERPRETER

6. CODE CONVERTERS

IN ORDER OF(1)FROM CODE(2)TO CODE(3)No.WORDS (4)No.INPUT BITS(5)No.OUTPUT BITS(6)TYPE No.

LINE No.	6 TYPE NUMBER	CONVERSION CODE 1 FRM	CONVERSION CODE 2 TO	3 NUMBER OF WORDS	NO.OF CODE BITS 4 IN	NO.OF CODE BITS 5 OUT	MODE	STRUCTURE CODE	MAX. ACCESS TIME (S)	MAX. OPER. POWER DISS. (W)	RATED POWER SUPP. SPAN NEG. (V)	RATED POWER SUPP. SPAN POS. (V)	INPUT LOGIC LEVELS MAX. '0' (V)	INPUT LOGIC LEVELS MIN. '1' (V)	MIN. OUTPUT SINK CURRENT (A)	MIN. OUTPUT SINK CURRENT @ OUT CODE @ OUT	OPER TEMP RNGE CODE -	OPER TEMP RNGE CODE +	DRAWINGS FUNCTIONAL EQUIVALENT NUMBER	DRAWINGS OUTLINE
1	N8224E	1	2	32	7	8	S	BTX	50n	400m	0.0	5.0	.40%		9.6m	.40	0	7	74-88	ML61c
2	N8224R	1	2	32	7	8	S	BTX	50n	400m	0.0	5.0	.40%		9.6m	.40	0	7	74-88	FL18
3	S8224E	1	2	32	7	8	S	BTX	50n	400m	0.0	5.0	.40%		9.6m	.40	5	C	74-88	ML61c
4	S8224R	1	2	32	7	8	S	BTX	50n	400m	0.0	5.0	.40%		9.6m	.40	5	C	74-88	FL18
5	NCM6561L#3	1	2	128				MNX	350n	600m†	3.0	12	.80	3.0	1.6m	.40	0	7	B121	DL24ef
6	NCM6561P#3	1	2	128				MNX	350n	600m†	3.0	12	.80	3.0	1.6m	.40	0	7	B121	DL24ef
7	NC6561L#6	1	2	128	10	8	S	MNA	350n	600m†	3.0	12	.80	3.0	1.6m	.40	0	7	B121	DL24q
8	NC6561P#6	1	2	128	10	8	S	MNA	350n	600m†	3.0	12	.80	3.0	1.6m	.40	0	7	B121	DL24q
9	MCM6591L#3	1	2	128	11	8	S	MNG	800n	405m	3.0	12	.80	3.0§	1.6m	.40	0	7	B144	DL24e
10	NC6591L#6	1	2	128	11	8	S	MNA	800n	405m	3.0	12	.80	3.0	1.6m	.40	0	7	B144	DL24q
11	NC6591P#6	1	2	128	11	8	S	MNA	800n	405m	3.0	12	.80	3.0	1.6m	.40	0	7	B144	DL24q
12	MM4220EKJ#2	1	2	128	6	8	S	MPX	650n	300mØ	12	12	10*	4.0			5	C	B26a	DL24cc
13	MM5220EKJ#2	1	2	128	6	8	S	MPX	650n	300mØ	12	12	10*	4.0			2	7	B26a	DL24cc
14	MM5220EKN#2	1	2	128	6	8	S	MPX	650n	300mØ	12	12	10*	4.0			2	7	B26a	DL24au
15	MM5221RRJ	1	2	128	7	8	S	MPX	950n	204mØ	12	5.0	3.0*	.80			0	7	B26a	DL24cc
16	MM5221RRN	1	2	128	7	8	S	MPX	950n	204mØ	12	5.0	3.0*	.80			0	7	B26a	DL24au
17	MCM6561L#6	1	2	128	8	8	S	MNA	350n	1.0	3.0	12	.40%	3.0	1.6m	.40	0	7	B121	DL24e
18	MCM6561P#6	1	2	128	8	8	S	MNA	350n	1.0	3.0	12	.40%	3.0	1.6m	.40	0	7	B121	DL24br
19	MCM6562L#6	1	2	128	8	8	S	MNA	350n	1.0	3.0	12	.40%	3.0	1.6m	.40	0	7	B121	DL24e
20	MCM6562P#6	1	2	128	8	8	S	MNA	350n	1.0	3.0	12	.40%	3.0	1.6m	.40	0	7	B121	DL24br
21	NC6591#6	1	2	128	8	8	S	MNX	350n	600m†	3.0	12	.80	3.0§	1.6m	.40	0	7	B144	
22	MD5200-0004	1	2	256	4	4	S	BTC	50n	575m	0.0	5.5	.80	2.0	10m	.40	5	C	B50	DL16ek
23	MD5200-0005	1	2	256	4	4	S	BTC	50n	575m	0.0	5.5	.80	2.0	10m	.40	5	C	B50	DL16ek
24	MD6200-0004	1	2	256	4	4	S	BTC	50n	575m	0.0	5.5	.85	2.0	15m	.45	0	7	B50	DL16ek
25	MD6200-0005	1	2	256	4	4	S	BTC	50n	575m	0.0	5.5	.85	2.0	15m	.45	0	7	B50	DL16ek
26	CRC3502-1-2	1	2	256	7Ø	8	S	MPX	800n	400mØ	0.0	5.0	.50	4.3	2.0m	.40	2	8	ML13c	ML13d
27	CRC3502-2-2	1	2	256	7Ø	8	S	MPX	800n	400mØ	0.0	5.0	.50	4.3	2.0m	.40	2	8		FL4
28	CM2850CDE0017%	1	2	256	8	4	S	BTX	50n	500m	0.0	5.0	.80	2.0	16m	.40	0	7	E7	
29	CM2850CDE0018%	1	2	256	8	4	S	BTX	50n	500m	0.0	5.0	.80	2.0	16m	.40	0	7	E7	
30	HROM1024-2-0004	1	2	256	8	4	S	BTX	60n	650mØ	0.0	5.0	.85	2.0	15m	.45	5	C	E11	DL16au
31	HROM1024-2-0005	1	2	256	8	4	S	BTX	60n	650mØ	0.0	5.0	.85	2.0	15m	.45	5	C	E11	DL16au
32	HROM1024-5-0004	1	2	256	8	4	S	BTX	60n	650mØ	0.0	5.0	.85	2.0	15m	.45	0	7	E11	DL16au
33	HROM1024-5-0005	1	2	256	8	4	S	BTX	60n	650mØ	0.0	5.0	.85	2.0	15m	.45	0	7	E11	DL16au
34	HROM1024B2-0004	1	2	256	8	4	S	BTX	60n	500m†	0.0	5.0	.85	2.0	15m	.45	5	C		
35	HROM1024B2-0005	1	2	256	8	4	S	BTX	60n	500m†	0.0	5.0	.85	2.0	15m	.45	5	C		
36	HROM1024B5-0004	1	2	256	8	4	S	BTX	60n	500m†	0.0	5.0	.85	2.0	15m	.45	0	7		
37	HROM1024B5-0005	1	2	256	8	4	S	BTX	60n	500m†	0.0	5.0	.85	2.0	15m	.45	0	7		
38	MM4230QYJ	1	2	256	8	8	S	MPX	725n	960mØ	12	12	10*	4.0			5	C	B26	DL24cc
39	MM5230QYJ	1	2	256	8	8	S	MPX	725n	960mØ	12	12	10*	4.0			0	7	B26	DL24cc
40	MM5230QYN	1	2	256	8	8	S	MPX	725n	960mØ	12	12	10*	4.0			0	7	B26	DL24au
41	TMS2604JC#1	1	2	512	7	8	S	MXX	1.0u	180m†	24	0.0	-3.0	-8.0			2	8	PN24w	ML47d
42	TMS2604NC#1	1	2	512	7	8	S	MXX	1.0u	180m†	24	0.0	-3.0	-8.0			2	8	PN24w	DL24bu
43	EA3307#1	1	2	512	7§	8	D	MPX	1.5u	300mØ	13	0.0	-2.0	-9.0			0	7	B36	DL24bb
44	EA4015#1	1	2	512	8	10	S	MPX	725n	450m	12	12	10	3.0	1.6m	.40	5	8	E14	DL24bb
45	MK2503P#1	1	2	512	8	8	S	MPI	700n	476m	12	5.0	.40	2.4§	1.6m	.40	0	7	B73	ML21
46	MK2601P#1	1	2	512	8	8	S	MPI	700n	476m	12	5.0	.40	2.4§	1.6m	.40	0	7	B99	ML21
47	FDR131Z1#1	1	2	512	9	8	D	MPX	1.5u	100m†	14	0.0	-9.0	-2.0			0	7	B36	DL24bb
48	NCM6561L#2	1	3	128				MNX	350n	600m†	3.0	12	.80	3.0	1.6m	.40	0	7	B121	DL24ef
49	NCM6561P#2	1	3	128				MNX	350n	600m†	3.0	12	.80	3.0	1.6m	.40	0	7	B121	DL24ef
50	NC6561L#2	1	3	128	10	8	S	MNA	350n	600m†	3.0	12	.80	3.0	1.6m	.40	0	7	B121	DL24q
51	NC6561P#2	1	3	128	10	8	S	MNA	350n	600m†	3.0	12	.80	3.0	1.6m	.40	0	7	B121	DL24q
52	MCM6591L#1	1	3	128	11	8	S	MNG	800n	405m	3.0	12	.80	3.0§	1.6m	.40	0	7	B144	DL24e
53	NC6591L#2	1	3	128	11	8	S	MNA	800n	405m	3.0	12	.80	3.0	1.6m	.40	0	7	B144	DL24q
54	NC6591P#2	1	3	128	11	8	S	MNA	800n	405m	3.0	12	.80	3.0	1.6m	.40	0	7	B144	DL24q
55	MCM6561L#2	1	3	128	8	8	S	MNA	350n	1.0	3.0	12	.40%	3.0	1.6m	.40	0	7	B121	DL24e
56	MCM6561P#2	1	3	128	8	8	S	MNA	350n	1.0	3.0	12	.40%	3.0	1.6m	.40	0	7	B121	DL24br
57	MCM6562L#2	1	3	128	8	8	S	MNA	350n	1.0	3.0	12	.40%	3.0	1.6m	.40	0	7	B121	DL24e
58	MCM6562P#2	1	3	128	8	8	S	MNA	350n	1.0	3.0	12	.40%	3.0	1.6m	.40	0	7	B121	DL24br
59	NC6591#2	1	3	128	8	8	S	MNX	350n	600m†	3.0	12	.80	3.0§	1.6m	.40	0	7	B144	
60	EA3101#1	1	3	256	7Ø	7Ø	D	MPX	750n	300mØ	13	0.0	-2.0	-9.0			5	8	B35	DL24bb
61	FDR126Z1#1	1	3	256	8	10	D	MPX	1.0u	100m†	14	0.0	-9.0	-2.0			5	8	B35	DL24bb
62	MCM1151L#1	1	3	256	8	10	S	MPX	800n	600n	24	0.0	.30	-16	10uΔ		2	8	B77	DL24w
63	TMS2602JC#1	1	3	512	7	8Ø	S	MXX	1.0u	180m†	24	0.0	-3.0	-8.0			2	8	PN24w	ML47d
64	TMS2602NC#1	1	3	512	7	8Ø	S	MXX	1.0u	180m†	24	0.0	-3.0	-8.0			2	8	PN24w	DL24bu
65	MM4220LRJ#2	1	4	128	6	7Ø	S	MPX	650n	300mØ	12	12	10*	4.0			5	C	B26a	DL24cc
66	MM5220LRJ#2	1	4	128	6	7Ø	S	MPX	650n	300mØ	12	12	10*	4.0			2	7	B26a	DL24cc
67	MM5220LRN#2	1	4	128	6	7Ø	S	MPX	650n	300mØ	12	12	10*	4.0			2	7	B26a	DL24au
68	NCM6561L#1	1	6	128			S	MNX	350n	600m†	3.0	12	.80	3.0	1.6m	.40	0	7	B121	DL24ef
69	NCM6561P#1	1	6	128				MNX	350n	600m†	3.0	12	.80	3.0	1.6m	.40	0	7	B121	DL24ef
70	NC6561L#4	1	6	128	10	8	S	MNA	350n	600m†	3.0	12	.80	3.0	1.6m	.40	0	7	B121	DL24q
71	NC6561P#4	1	6	128	10	8	S	MNA	350n	600m†	3.0	12	.80	3.0	1.6m	.40	0	7	B121	DL24q
72	MCM6591L#4	1	6	128	11	8	S	MNG	800n	405m	3.0	12	.80	3.0§	1.6m	.40	0	7	B144	DL24e
73	NC6591L#4	1	6	128	11	8	S	MNA	800n	405m	3.0	12	.80	3.0	1.6m	.40	0	7	B144	DL24q
74	NC6591P#4	1	6	128	11	8	S	MNA	800n	405m	3.0	12	.80	3.0	1.6m	.40	0	7	B144	DL24q
75	S8539#2	1	6	128	8	12	S	MPI	1.0u		12	5.0	.70	4.0	1.6m	.40	0	7	B92	ML13b
76	MCM6561L#4	1	6	128	8	8	S	MNA	350n	1.0	3.0	12	.40%	3.0	1.6m	.40	0	7	B121	DL24e
77	MCM6561P#4	1	6	128	8	8	S	MNA	350n	1.0	3.0	12	.40%	3.0	1.6m	.40	0	7	B121	DL24br
78	MCM6562L#4	1	6	128	8	8	S	MNA	350n	1.0	3.0	12	.40%	3.0	1.6m	.40	0	7	B121	DL24e
79	MCM6562P#4	1	6	128	8	8	S	MNA	350n	1.0	3.0	12	.40%	3.0	1.6m	.40	0	7	B121	DL24br
80	NC6591#4	1	6	128	8	8	S	MNX	350n	600m†	3.0	12	.80	3.0§	1.6m	.40	0	7	B144	
81	EA4035#1	1	6	512	9	10			725n	400m	24	0.0	.30	9.0	1.6m	.40	5	8		
82	MM5221RQN#1	1	11	128	6	8	S	MPX	950n	204mØ	12	5.0	3.0*	.80			0	7	B26a	DL24au
83	2526/CM3940	2	1	64	9	9	S	MPG	700n	730m	12	5.0	.60	3.4§	1.6m	.50	0	7	B112	DL24ar
84	NC6561L#5	2	1	128	10	8	S	MNA	350n	600m†	3.0	12	.80	3.0	1.6m	.40	0	7	B121	DL24q
85	NC6561P#5	2	1	128	10	8	S	MNA	350n	600m†	3.0	12	.80	3.0	1.6m	.40	0	7	B121	DL24q
86	MCM6591L#5	2	1	128	11	8	S	MNG	800n	405m	3.0	12	.80	3.0§	1.6m	.40	0	7	B144	DL24e
87	NC6591L#5	2	1	128	11	8	S	MNA	800n	405m	3.0	12	.80	3.0	1.6m	.40	0	7	B144	DL24q
88	NC6591P#5	2	1	128	11	8	S	MNA	800n	405m	3.0	12	.80	3.0	1.6m	.40	0	7	B144	DL24q
89	NCM6561L#6	2	1	256				MNX	350n	600m†	3.0	12	.80	3.0	1.6m	.40	0	7	B121	DL24ef
90	MD5200-0002	2	1	256	4	4	S	BTC	50n	575m	0.0	5.5	.80	2.0	10m	.40	5	C	B50	DL16ek
91	MD5200-0003	2	1	256	4	4	S	BTC	50n	575m	0.0	5.5	.80	2.0	10m	.40	5	C	B50	DL16ek
92	MD6200-0002	2	1	256	4	4	S	BTC	50n	575m	0.0	5.5	.85	2.0	15m	.45	0	7	B50	DL16ek
93	MD6200-0003	2	1	256	4	4	S	BTC	50n	575m	0.0	5.5	.85	2.0	15m	.45	0	7	B50	DL16ek
94	CM2850CDE0014%	2	1	256	8	4	S	BTX	50n	500m	0.0	5.0	.80	2.0	16m	.40	0	7	E6	
95	CM2850CDE0015%	2	1	256	8	4	S	BTX	50n	500m	0.0	5.0	.80	2.0	16m	.40	0	7	E6	
96	HROM1024-2-0002	2	1	256	8	4	S	BTX	60n	650mØ	0.0	5.0	.85	2.0	15m	.45	5	C	E11	DL16au
97	HROM1024-2-0003	2	1	256	8	4	S	BTX	60n	650mØ	0.0	5.0	.85	2.0	15m	.45	5	C	E11	DL16au
98	HROM1024-5-0002	2	1	256	8	4	S	BTX	60n	650mØ	0.0	5.0	.85	2.0	15m	.45	0	7	E11	DL16au
99	HROM1024-5-0003	2	1	256	8	4	S	BTX	60n	650mØ	0.0	5.0	.85	2.0	15m	.45	0	7	E11	DL16au
100	HROM1024B2-0002	2	1	256	8	4	S	BTX	60n	500m†	0.0	5.0	.85	2.0	15m	.45	5	C		
101	HROM1024B2-0003	2	1	256	8	4	S	BTX	60n	500m†	0.0	5.0	.85	2.0	15m	.45	5	C		
102	HROM1024B5-0002	2	1	256	8	4	S	BTX	60n	500m†	0.0	5.0	.85	2.0	15m	.45	0	7		
103	HROM1024B5-0003	2	1	256	8	4	S	BTX	60n	500m†	0.0	5.0	.85	2.0	15m	.45	0	7		
104	MCM6561L#5	2	1	256	8	8	S	MNA	350n	1.0	3.0	12	.40%	3.0	1.6m	.40	0	7	B121	DL24e
105	MCM6561P#5	2	1	256	8	8	S	MNA	350n	1.0	3.0	12	.40%	3.0	1.6m	.40	0	7	B121	DL24br
106	MCM6562L#5	2	1	256	8	8	S	MNA	350n	1.0	3.0	12	.40%	3.0	1.6m	.40	0	7	B121	DL24e
107	MCM6562P#5	2	1	256	8	8	S	MNA	350n	1.0	3.0	12	.40%	3.0	1.6m	.40	0	7	B121	DL24br
108	MM4230QXJ	2	1	256	8	8	S	MPX	725n	960mØ	12	12	10*	4.0			5	C	B26	DL24cc
109	MM5230QXJ	2	1	256	8	8	S	MPX	725n	960mØ	12	12	10*	4.0			0	7	B26	DL24cc
110	MM5230QXN	2	1	256	8	8	S	MPX	725n	960mØ	12	12	10*	4.0			0	7	B26	DL24au

SYMBOLS AND CODES EXPLAINED IN INTERPRETER

6. CODE CONVERTERS

IN ORDER OF(1)FROM CODE(2)TO CODE(3)No.WORDS (4)No.INPUT BITS(5)No.OUTPUT BITS(6)TYPE No.

LINE No.	6 TYPE NUMBER	CONVERSION CODE 1 FRM	2 TO	3 NUMBER OF WORDS	NO.OF CODE BITS 4 IN	5 OUT	MODE	STRUCTURE CODE	MAX. ACCESS TIME (S)	MAX. OPER. POWER DISS. (W)	RATED POWER SUPP. SPAN NEG. (V)	POS. (V)	INPUT LOGIC LEVELS MAX. '0' (V)	MIN. '1' (V)	MIN. OUTPUT SINK CURRENT (A)	@ OUT @ OUT	OPER TEMP RNGE CODE -	+	DRAWINGS FUNCTIONAL EQUIVALENT NUMBER	OUTLINE
1	NC6591#5	2	1	256	8	8	S	MNX	350n	600m†	3.0	12	.80	3.0§	1.6m	.40	0	7	B144	
2	TMS2603JC	2	1	256	8	8Ø	S	MXX	1.0u	180m†	24	0.0	-3.0	-8.0			2	8	PN24w	ML47d
3	TMS2603NC	2	1	256	8	8Ø	S	MXX	1.0u	180m†	24	0.0	-3.0	-8.0			2	8	PN24w	DL24bu
4	CRC3503-1-2	2	1	256	8	9§	S	MPN	800n	400mØ	12.0	5.0	0.5	4.3	2.0m	.40	2	8	C37	ML13
5	CRC3503-2-2	2	1	256	8	9§	S	MPN	800n	400mØ	12.0	5.0	0.5	4.3	2.0m	.40	2	8	C38	FL4
6	N2430YCM0000	2	1	256	9	8	S	MPX	500n	1.1	12	12	10*	4.0			2	7		ML21b
7	EA4015#2	2	1	512	8	10	S	MPX	725n	450m	12	12	10	3.0	1.6m	.40	5	8	E14	DL24bb
8	EA3307#2	2	1	512	8	7Ø	D	MPX	1.5u	300mØ	13	0.0	-2.0	-9.0			0	7	B36	DL24bb
9	MK2503P#2	2	1	512	8	8	S	MPI	700n	476m	12	5.0	.40	2.4§	1.6m	.40	0	7	B73	ML21
10	MK2601P#2	2	1	512	8	8	S	MPI	700n	476m	12	5.0	.40	2.4§	1.6m	.40	0	7	B99	ML21
11	FDR131Z1#2	2	1	512	9	8	D	MPX	1.5u	100m†	14	0.0	-9.0	-2.0			0	7	B36	DL24bb
12	MM4230FEJ#2	2	3	256	12	8	S	MPX	725n	960mØ	12	12	10*	4.0			5	C	B26	DL24cc
13	MM5230FEJ#2	2	3	256	12	8	S	MPX	725n	960mØ	12	12	10*	4.0			0	7	B26	DL24cc
14	MM5230FEN#2	2	3	256	12	8	S	MPX	725n	960mØ	12	12	10*	4.0			0	7	B26	DL24au
15	MM4230JTJ#2	2	4	256	12	8	S	MPX	725n	960mØ	12	12	10*	4.0			5	C	B26	DL24cc
16	MM5230JTJ#2	2	4	256	12	8	S	MPX	725n	960mØ	12	12	10*	4.0			0	7	B26	DL24cc
17	MM5230JTN#2	2	4	256	12	8	S	MPX	725n	960mØ	12	12	10*	4.0			0	7	B26	DL24au
18	CM2850CDE0011%	2	6	256	8	4	S	BTX	50n	500m	0.0	5.0	.80	2.0	16m	.40	0	7	E8	
19	CM2850CDE0019%	2	6	256	8	4	S	BTX	50n	500m	0.0	5.0	.80	2.0	16m	.40	0	7	E8	
20	EA4034#1	2	6	512	9	10			725n	400m	24	0.0	.30	9.0	1.6m	.40	5	8		
21	CM2850CDE0049%	2	7	256	8	4	S	BTX	50n	500m	0.0	5.0	.80	2.0	16m	.40	0	7	E9	
22	CM2850CDE0050%	2	7	256	8	4	S	BTX	50n	500m	0.0	5.0	.80	2.0	16m	.40	0	7	E9	
23	EA3001#2	3	1	90	7	7§	D	MPX												DL24bb
24	NCM6561L#4	3	1	128				MNX	350n	600m†	3.0	12	.80	3.0	1.6m	.40	0	7	B121	DL24ef
25	NCM6561P#4	3	1	128				MNX	350n	600m†	3.0	12	.80	3.0	1.6m	.40	0	7	B121	DL24ef
26	NC6561L#1	3	1	128	10	8	S	MNA	350n	600m†	3.0	12	.80	3.0	1.6m	.40	0	7	B121	DL24q
27	NC6561P#1	3	1	128	10	8	S	MNA	350n	600m†	3.0	12	.80	3.0	1.6m	.40	0	7	B121	DL24q
28	MCM6591L#2	3	1	128	11	8	S	MNG	800n	405m	3.0	12	.80	3.0§	1.6m	.40	0	7	B144	DL24e
29	NC6591L#1	3	1	128	11	8	S	MNA	800n	405m	3.0	12	.80	3.0	1.6m	.40	0	7	B144	DL24q
30	NC6591P#1	3	1	128	11	8	S	MNA	800n	405m	3.0	12	.80	3.0	1.6m	.40	0	7	B144	DL24q
31	MCM6561L#1	3	1	128	8	8	S	MNA	350n	1.0	3.0	12	.40%	3.0	1.6m	.40	0	7	B121	DL24e
32	MCM6561P#1	3	1	128	8	8	S	MNA	350n	1.0	3.0	12	.40%	3.0	1.6m	.40	0	7	B121	DL24br
33	MCM6562L#1	3	1	128	8	8	S	MNA	350n	1.0	3.0	12	.40%	3.0	1.6m	.40	0	7	B121	DL24e
34	MCM6562P#1	3	1	128	8	8	S	MNA	350n	1.0	3.0	12	.40%	3.0	1.6m	.40	0	7	B121	DL24br
35	NC6591#1	3	1	128	8	8	S	MNX	350n	600m†	3.0	12	.80	3.0§	1.6m	.40	0	7	B144	
36	FDR106Z1#4	3	1	256	7	9§	D	MPX	1.0u	90m†	14	0.0	-9.0	-2.0			5	8	B122	ML118c
37	EA3101#2	3	1	256	7Ø	7Ø	D	MPX	750n	300mØ	13	0.0	-2.0	-9.0			5	8	B35	DL24bb
38	MCM1151L#2	3	1	256	8	10	S	MPX	800n	600n	24	0.0	.30	-16	10u△		2	8	B77	DL24w
39	TMS2602JC#2	3	1	512	7	8Ø	S	MXX	1.0u	180m†	24	0.0	-3.0	-8.0			2	8	PN24w	ML47d
40	TMS2602NC#2	3	1	512	7	8Ø	S	MXX	1.0u	180m†	24	0.0	-3.0	-8.0			2	8	PN24w	DL24bu
41	MM4230FEJ#1	3	2	256	12	8	S	MPX	725n	960mØ	12	12	10*	4.0			5	C	B26	DL24cc
42	MM5230FEJ#1	3	2	256	12	8	S	MPX	725n	960mØ	12	12	10*	4.0			0	7	B26	DL24cc
43	MM5230FEN#1	3	2	256	12	8	S	MPX	725n	960mØ	12	12	10*	4.0			0	7	B26	DL24au
44	TMS2604JC#2	3	2	512	7	8	S	MXX	1.0u	180m†	24	0.0	-3.0	-8.0			2	8	PN24w	ML47d
45	TMS2604NC#2	3	2	512	7	8	S	MXX	1.0u	180m†	24	0.0	-3.0	-8.0			2	8	PN24w	DL24bu
46	MM4220APJ	4	1	128	6	7	S	MPX	650n	300mØ	12	12	10*	4.0			5	C	B26a	DL24cc
47	MM5220APJ	4	1	128	6	7	S	MPX	650n	300mØ	12	12	10*	4.0			2	7	B26a	DL24cc
48	MM5220APN	4	1	128	6	7	S	MPX	650n	300mØ	12	12	10*	4.0			2	7	B26a	DL24au
49	MM4220LRJ#1	4	1	128	6	8Ø	S	MPX	650n	300mØ	12	12	10*	4.0			5	C	B26a	DL24cc
50	MM5220LRJ#1	4	1	128	6	8Ø	S	MPX	650n	300mØ	12	12	10*	4.0			2	7	B26a	DL24cc
51	MM5220LRN#1	4	1	128	6	8Ø	S	MPX	650n	300mØ	12	12	10*	4.0			2	7	B26a	DL24au
52	MM4220EKJ#1	4	2	128	6	8	S	MPX	650n	300mØ	12	12	10*	4.0			5	C	B26a	DL24cc
53	MM5220EKJ#1	4	2	128	6	8	S	MPX	650n	300mØ	12	12	10*	4.0			2	7	B26a	DL24cc
54	MM5220EKN#1	4	2	128	6	8	S	MPX	650n	300mØ	12	12	10*	4.0			2	7	B26a	DL24au
55	MM4230JTJ#1	4	2	256	12	8	S	MPX	725n	960mØ	12	12	10*	4.0			5	C	B26	DL24cc
56	MM5230JTJ#1	4	2	256	12	8	S	MPX	725n	960mØ	12	12	10*	4.0			0	7	B26	DL24cc
57	MM5230JTN#1	4	2	256	12	8	S	MPX	725n	960mØ	12	12	10*	4.0			0	7	B26	DL24au
58	DM54184AJ	4	5	40	6	6	S	BTX	50n	400m	0.0	5.0	.80	2.0	12m	.40	5	C	PN16bs	DL16cr
59	DM54184AW	4	5	40	6	6	S	BTX	50n	400m	0.0	5.0	.80	2.0	12m	.40	5	C	PN16bs	FL39
60	DM54184J	4	5	40	6	6	S	BTX	50n	400m	0.0	5.0	.80	2.0	12m	.40	5	C	PN16bs	DL16cr
61	DM54184W	4	5	40	6	6	S	BTX	50n	400m	0.0	5.0	.80	2.0	12m	.40	5	C	PN16bs	FL39
62	DM74184AJ	4	5	40	6	6	S	BTX	50n	400m	0.0	5.0	.80	2.0	12m	.40	0	7	PN16bs	DL16cr
63	DM74184AN	4	5	40	6	6	S	BTX	50n	400m	0.0	5.0	.80	2.0	12m	.40	0	7	PN16bs	DL16bh
64	DM74184AW	4	5	40	6	6	S	BTX	50n	400m	0.0	5.0	.80	2.0	12m	.40	0	7	PN16bs	FL39
65	DM74184J	4	5	40	6	6	S	BTX	50n	400m	0.0	5.0	.80	2.0	12m	.40	0	7	PN16bs	DL16cr
66	DM74184N	4	5	40	6	6	S	BTX	50n	400m	0.0	5.0	.80	2.0	12m	.40	0	7	PN16bs	DL16bh
67	DM74184W	4	5	40	6	6	S	BTX	50n	400m	0.0	5.0	.80	2.0	12m	.40	0	7	PN16bs	FL39
68	FLH561-74184	4	5	40	6	6	S	BTC	40n	500m	0.0	5.0	.80	2.0	12m	.40	0	7	PN16cx	DLØ
69	FLH565-84184	4	5	40	6	6	S	BTC	40n	500m	0.0	5.0	.80	2.0	12m	.40	2	8	PN16cx	DLØ
70	5548	4	5	256	6	6	S	BTX	40n	930m♦	0.0	5.0	.80	2.0			0	7		
71	FLH571-74185A	5	4	64	6	6	S	BTC	40n	500m	0.0	5.0	.80	2.0	12m	.40	0	7	PN16cx	DLØ
72	FLH575-84185A	5	4	64	6	6	S	BTC	40n	500m	0.0	5.0	.80	2.0	12m	.40	2	8	PN16cx	DLØ
73	SN74185AW	5	4	64	6	7	S	BTC	25n	546m	0.0	5.25	.80	2.0	12m	.40	0	7	PN16cw	MO004AG
74	5549	5	4	256	6	6	S	BTX	40n	930m♦	0.0	5.0	.80	2.0			0	7		
75	MCM4067AL%	5	4	256	8	9	S	BTX	50n	650m	0.0	5.0	.45%	2.5	12m	.45	0	7	E12	ML78
76	MCM4067L%	5	4	256	8	9	S	BTX	50n	650m	0.0	5.0	.45%	2.5	12m	.45	0	7	E12	DL16bp
77	MCM4068AL%	5	4	256	8	9	S	BTX	50n	650m	0.0	5.0	.45%	2.5	12m	.45	0	7	E12	ML78
78	MCM4068L%	5	4	256	8	9	S	BTX	50n	650m	0.0	5.0	.45%	2.5	12m	.45	0	7	E12	DL16bp
79	NC6561L#3	6	1	128	10	8	S	MNA	350n	600m†	3.0	12	.80	3.0	1.6m	.40	0	7	B121	DL24q
80	NC6561P#3	6	1	128	10	8	S	MNA	350n	600m†	3.0	12	.80	3.0	1.6m	.40	0	7	B121	DL24q
81	MCM6591L#6	6	1	128	11	8	S	MNG	800n	405m	3.0	12	.80	3.0§	1.6m	.40	0	7	B144	DL24e
82	NC6591L#3	6	1	128	11	8	S	MNA	800n	405m	3.0	12	.80	3.0	1.6m	.40	0	7	B144	DL24q
83	NC6591P#3	6	1	128	11	8	S	MNA	800n	405m	3.0	12	.80	3.0	1.6m	.40	0	7	B144	DL24q
84	S8457#2	6	1	128	12	8	S	MPI	800n	1.0	12	5.0	.70	4.0	1.6m	.40	0	7	B89	ML13b
85	NCM6561P#5	6	1	256				MNX	350n	600m†	3.0	12	.80	3.0	1.6m	.40	0	7	B121	DL24ef
86	MCM1111L	6	1	256	12	8	S	MPX	800n	600m	24	0.0	0.0	-12	10u△		2	8	B75	DL24w
87	MCM1112L	6	1	256	12	8	S	MPX	800n	600m	24	0.0	0.0	-12	10u△		2	8	B75	DL24w
88	MCM4069AL%	6	1	256	12	8	S	BTX	40n	650m	0.0	5.0	.45%		12m	.45	0	7	E12a	DL16m
89	MCM4070AL%	6	1	256	12	8	S	BTX	40n	650m	0.0	5.0	.45%		12m	.45	0	7	E12a	DL16m
90	MM4231CMUJ	6	1	256	12	8	S	MPX	725n	480mØ	12	12	10*	4.0			5	C	E21	DL24h
91	MM5231CMUJ	6	1	256	12	8	S	MPX	725n	480mØ	12	12	10*	4.0			0	7	E21	DL24h
92	MM5231CMUN	6	1	256	12	8	S	MPX	725n	480mØ	12	12	10*	4.0			0	7	E21	DL24au
93	MCM6561L#3	6	1	256	8	8	S	MNA	350n	1.0	3.0	12	.40%	3.0	1.6m	.40	0	7	B121	DL24e
94	MCM6561P#3	6	1	256	8	8	S	MNA	350n	1.0	3.0	12	.40%	3.0	1.6m	.40	0	7	B121	DL24br
95	MCM6562L#3	6	1	256	8	8	S	MNA	350n	1.0	3.0	12	.40%	3.0	1.6m	.40	0	7	B121	DL24e
96	MCM6562P#3	6	1	256	8	8	S	MNA	350n	1.0	3.0	12	.40%	3.0	1.6m	.40	0	7	B121	DL24br
97	NC6591#3	6	1	256	8	8	S	MNX	350n	600m†	3.0	12	.80	3.0§	1.6m	.40	0	7	B144	
98	MM423BO#1	6	1	256	9	8	S	MPX	1.0u	420mØ	12	12	0.5*	5.0			5	C	PN18x	ML30b
99	MM523BO#1	6	1	256	9	8	S	MPX	1.0u	420mØ	12	12	9.5*	5.0			2	7	PN18x	ML30b
100	EA4035#2	6	1	512	9	10			725n	400m	24	0.0	.30	9.0	1.6m	.40	5	8		
101	MM423BO#2	6	1	512	9	8	S	MPX	1.0u	420mØ	12	12	9.5*	5.0			5	C	PN18x	ML30b
102	MM523BO#2	6	1	512	9	8	S	MPX	1.0u	420mØ	12	12	9.5*	5.0			2	7	PN18x	ML30b
103	MM4230QWJ	6	2	256	12	8	S	MPX	725n	960mØ	12	12	10*	4.0			5	C	B26	DL24cc
104	MM5230QWJ	6	2	256	12	8	S	MPX	725n	960mØ	12	12	10*	4.0			0	7	B26	DL24cc
105	MM5230QWN	6	2	256	12	8	S	MPX	725n	960mØ	12	12	10*	4.0			0	7	B26	DL24au
106	CM2850CDE0012%	6	2	256	8	4	S	BTX	50n	500m	0.0	5.0	.80	2.0	16m	.40	0	7	E5	
107	CM2850CDE0013%	6	2	256	8	4	S	BTX	50n	500m	0.0	5.0	.80	2.0	16m	.40	0	7	E5	
108	EA4034#2	6	2	512	9	10			725n	400m	24	0.0	.30	9.0	1.6m	.40	5	8		
109	CM2850CDE0051%	7	2	256	8	4	S	BTX	50n	500m	0.0	5.0	.80	2.0	16m	.40	0	7	E10	
110	CM2850CDE0052%	7	2	256	8	4	S	BTX	50n	500m	0.0	5.0	.80	2.0	16m	.40	0	7	E10	

SYMBOLS AND CODES EXPLAINED IN INTERPRETER

6. CODE CONVERTERS

IN ORDER OF(1)FROM CODE(2)TO CODE(3)No.WORDS (4)No.INPUT BITS(5)No.OUTPUT BITS(6)TYPE No.

LINE No.	6 TYPE NUMBER	CONVERSION CODE 1 FRM	CONVERSION CODE 2 TO	3 NUMBER OF WORDS	NO.OF CODE BITS 4 IN	NO.OF CODE BITS 5 OUT	MODE	STRUCTURE CODE	MAX. ACCESS TIME (S)	MAX. OPER. POWER DISS. (W)	RATED POWER SUPP. SPAN NEG. (V)	RATED POWER SUPP. SPAN POS. (V)	INPUT LOGIC LEVELS MAX. '0' (V)	INPUT LOGIC LEVELS MIN. '1' (V)	MIN. OUTPUT SINK CURRENT (A)	MIN. OUTPUT SINK CURRENT @ OUT @ OUT	OPER TEMP RNGE CODE -	OPER TEMP RNGE CODE +	DRAWINGS FUNCTIONAL EQUIVALENT NUMBER	DRAWINGS OUTLINE
1	AY5-2376	8	1	264	88	9§	D	MPN		170m	12	5.0	.80	3.5	1.6m	.40	0	7	E17	DL40c
2	AY5-3600	8	1	360	90	10	D	MPN		204m	12	5.0	.80	3.5	1.6m	.40	0	7	PN16cw	DL40c
3	S9021	8	1	360	90	10	D	MPX	5.0m	200m	12	5.0	.70	4.0	1.6m	.40	0	7	E15	ML151
4	EA2007ADC#1	8	1	396	99	10	D	MPX			12	5.0	.80	2.8§	10uΔ		0	7	E16	ML166
5	EA2007APC#1	8	1	396	99	10	D	MPX			12	5.0	.80	2.8§	10uΔ		0	7	E16	ML167
6	EA2007ADC#2	8	2	396	99	10	D	MPX			12	5.0	.80	2.8§	10uΔ		0	7	E16	ML166
7	EA2007APC#2	8	2	396	99	10	D	MPX			12	5.0	.80	2.8§	10uΔ		0	7	E16	ML167
8	MM54C922N	8	5	16	16	4	D	MCX		500mØ	0.0	15	1.5%	13.5	360u	.40	5	C	E24	DL18p
9	MM74C922N	8	5	16	16	4	D	MCX		500mØ	0.0	15	1.5%	13.5	360u	.40	4	8	E24	DL18p
10	MM54C923N	8	5	16	20	5	D	MCX		500mØ	0.0	15	1.5%	13.5	360u	.40	5	C	E24a	DL20r
11	MM74C923N	8	5	16	20	5	D	MCX		500mØ	0.0	15	1.5%	13.5	360u	.40	4	8	E24a	DL20r
12	AY5-3600-PRO	8	5	360	90	9	D	MPN		204m	12	5.0	.80	3.5	1.6m	.40	0	7	PN16cw	DL40c
13	MM5745N	8	9	312	78	10	D	MPX		700mØØ	12	5	.40%	-1.8	1.6m	.40	0	7	E23	ML257
14	MM5746N	8	9	312	78	10	D	MPX		700mØØ	12	5	.40%	-1.8	1.6m	.40	0	7	E23a	ML257
15	MP3802	8	9	360	90	10	S	MXX		204m	12	5.0	.80	3.5	1.6m	.40	0	7	E19	ML174a
16	MM5740N	8	9	360	90	9	D	MNG		600mØØ	12	5	-.75%	-4.5	1.6m	.40	0	7	E22	ML257
17	EA2000CD	8	9	396	99	10	D	MPX		408mØ	12	5.0	.80	2.8§	10uΔ		0	7	E16	ML166
18	EA2000CP	8	9	396	99	10	D	MPX		408mØ	12	5.0	.80	2.8§	10uΔ		0	7	E16	ML167
19	EA2030DC	8	9	396	99	10	D	MPX			12	5.0	.80	2.8§	10uΔ		0	7	E16	ML166
20	EA2030PC	8	9	396	99	10	D	MPX			12	5.0	.80	2.8§	10uΔ		0	7	E16	ML167
21	2526/CM3400	10	1	64	9	9	S	MPG	700n	730m	12	5.0	.60	3.4§	1.6m	.50	0	7	B112	DL24ar
22	MM4220BLJ	10	1	128	5	7	S	MPX	650n	300mØ	12	12	10*	4.0			5	C	B26a	DL24cc
23	MM5220BLJ	10	1	128	5	7	S	MPX	650n	300mØ	12	12	10*	4.0			2	7	B26a	DL24cc
24	MM5220BLN	10	1	128	5	7	S	MPX	650n	300mØ	12	12	10*	4.0			2	7	B26a	DL24au
25	MM5221RQN#2	11	1	128	6	8	S	MPX	950n	204mØ	12	5.0	3.0*	.80			0	7	B26a	DL24au
26	WD1100-02U#ai	12	13					MNG		1.0 Ø	0.0	5.0	0.7	2.0	3.2m	0.4	0	5	E27	DL20ae
27	WD1100-02V#ai	12	13					MNG		1.0 Ø	0.0	5.0	0.7	2.0	3.2m	0.4	0	5	E27	DL20af

7. SHIFT REGISTERS

IN ORDER OF(1)No.BITS/REG(2)No.REGISTERS (3)OP.CODE(4)MAX W/C FREQ(5)STRUCT(6)TYPE No

LINE No.	6 TYPE NUMBER	ORGANIZATION 1 BITS PER REGISTER	ORGANIZATION 2 NO REGS	3 OPER. CODE	4 MAX. WORST CASE FREQ. (Hz)	5 STRU-CTURE CODE	MAX. OPER. POWER DISS. (W)	RATED POWER SUPP. SPAN NEG. (V)	RATED POWER SUPP. SPAN POS. (V)	INPUT LOGIC LEVELS MAX. '0' (V)	INPUT LOGIC LEVELS MIN. '1' (V)	MAX. PROP. DELAY (S)	MIN. OUTPUT SINK CURRENT (A)	MIN. OUTPUT SINK CURRENT @ OUT (V)	MIN. CLOCK FREQ. (Hz)	OPER TEMP RNGE CODE -	OPER TEMP RNGE CODE +	DRAWINGS FUNCTIONAL EQUIVALENT NUMBER	DRAWINGS OUTLINE
1	MP132B	1	6	PPS	500k	MPX	300m	24	0.0	-3.5	-11	1.0u				2	7	F81	ML4c
2	SCL4006BD	1	18	SSS	6M	MCX	9.0m♦	0.0	15			700n	.07m	.40	1.2	5	C	40-06B	DL14ah
3	SCL4006BE	1	18	SSS	6M	MCX	9.0m♦	0.0	15			700n	.07m	.40	1.2	4	8	40-06B	DL14ah
4	SCL4006BF	1	18	SSS	6M	MCX	9.0m♦	0.0	15			700n	.07m	.40	1.2	5	C	40-06B	FL28
5	SCL4006BH	1	18	SSS	6.0M	MCX	300m	0.0	15	6.75	12	700n	.51m	.40	1.2	5	C	40-06B	CH∅
6	RC54170B	4			25n	BTX	750m♦	0.0	5.0	.80	2.0		16m	.40		5	C	74-170	DL16fm
7	RC54170F	4			25n	BTX	750m♦	0.0	5.0	.80	2.0		16m	.40		5	C	74-170	DL16fi
8	RC54170W	4			25n	BTX	750m♦	0.0	5.0	.80	2.0		16m	.40		5	C	74-170	FL25
9	SMC7495N	4	1													0	7		DL14v
10	uPD308C	4	1	PPD	100k	MXX		24	0.0	-9.0*	-4.0	1.5u				2	7	F140c	MO001AC
11	CD4076AD	4	1	PPD	12M	MCX	500m	0.0	10	.05%	9.95§	250n			6.0M	5	C	74-173N	MO001AE
12	CD4076AE	4	1	PPD	12M	MCX	500m	0.0	10	.05%	9.95§	250n			6.0M	4	8	74-173N	MO001AC
13	CD4076AF	4	1	PPD	12M	MCX	500m	0.0	10	.05%	9.95§	250n			6.0M	5	C	74-173N	MO001AC
14	CD4076AH	4	1	PPD	12M	MCX	500m	0.0	10	.05%	9.95§	250n			6.0M	5	C	74-173N	CH∅
15	CD4076AK	4	1	PPD	12M	MCX	500m	0.0	10	.05%	9.95§	250n			6.0M	5	C	74-173N	MO004AG
16	CD4076AY	4	1	PPD	12M	MCX	500m	0.0	10	.05%	9.95§	250n			6.0M	4	8	74-173N	MO001AC
17	CD4076BK	4	1	PPD	12M	MCX	500m	0.0	10	.05%	9.95§	250n			6.0M	5	C	74-173N	MO004AG
18	CD4076BY	4	1	PPD	12M	MCX	500m	0.0	10	.05%	9.95§	250n			6.0M	4	8	74-173N	MO001AC
19	370AJ	4	1	PPS		BDX	768m	0.0	15	6.5	5.0	750n	2.6m	1.8		3	7	F324	DL16fn
20	370AL	4	1	PPS		BDX	768m	0.0	15	6.5	5.0	750n	2.6m	1.8		3	7	F324	DL16cs
21	370BL	4	1	PPS		BDX	768m	0.0	15	6.5	5.0	750n	2.6m	1.8		5	C	F324	DL16cs
22	370CJ	4	1	PPS		BDX	494m	0.0	12	6.5	5.0	750n	2.1m	1.5		3	8	F324	DL16fn
23	370CL	4	1	PPS		BDX	494m	0.0	12	6.5	5.0	750n	2.1m	1.5		3	8	F324	DL16cs
24	370ML	4	1	PPS		BDX	494m	0.0	12	6.5	5.0	750n	2.1m	1.5		5	C	F324	DL16cs
25	ITT370-1D	4	1	PPS		BDX		0.0	12	5.0	6.5	250n				5	C	F385	DL16fg
26	ITT370-5D	4	1	PPS		BDX		0.0	12	5.0	6.5	220n				3	8	F385	DL16fg
27	MIC370-1D	4	1	PPS		BDX		0.0	12							5	C		DL16fg
28	MIC370-1D1	4	1	PPS		BDX		0.0	15							5	C		DL16fg
29	MIC370-5D	4	1	PPS		BDX		0.0	12							3	8		DL16fg
30	MIC370-5D1	4	1	PPS		BDX		0.0	15							3	8		DL16fg
31	S54S350F	4	1	PPS		BTD		0.0	5.0	0.8	2.0	10n	20m#	0.5		5	C	54S350	DL16fs
32	S54S350W	4	1	PPS		BTD		0.0	5.0	0.8	2.0	10n	20m#	0.5		5	C	74S350	FL25
33	FJJ181-7475	4	1	PPS		BTX	160m†	0.0	5.0	.80	2.0	40n	16m	.40		0	7	74-75N	DL16aq
34	FLJ151-7475	4	1	PPS		BTX	265m	0.0	5.0	.80	2.0	40n	16m	.40		0	7	F366	DL16ap
35	FLJ155-8475	4	1	PPS		BTX	265m	0.0	5.0	.80	2.0	40n	16m	.40		2	8	F366	DL16ap
36	FLJ541-74175	4	1	PPS		BTX	127m	0.0	5.0	.80	2.0	15n	16m	.40		0	7	74-175N	DL16ap
37	FLJ545-84175	4	1	PPS		BTX	127m	0.0	5.0	.80	2.0	15n	16m	.40		2	8	74-175N	DL16ap
38	M5395P	4	1	PPS		BTX	250m†	0.0	5.0	.40%	2.4	60n	18m	.40		0	7	F36	TO116
39	MIC6475J	4	1	PPS		BTX	160m	0.0	5.0	.80	2.0	40n				4	8	PN16ep	DL16fg
40	MIC54175J	4	1	PPS		BTX	150m♦	0.0	5.0	.80	2.0	17n				5	C	74-175N	DL16fa
41	MIC64175J	4	1	PPS		BTX	150m♦	0.0	5.0	.80	2.0	17n				4	8	74-175N	DL16fa
42	MIC74175J	4	1	PPS		BTX	150m♦	0.0	5.0	.80	2.0	17n				0	7	74-175N	DL16fa
43	MIC74175N	4	1	PPS		BTX	150m♦	0.0	5.0	.80	2.0	17n				0	7	74-175N	DL16fa
44	SN54278N	4	1	PPS		BTX	400m	0.0	5.0	.80	2.0	46n	16m	.80		5	C	74S281	DL14v
45	SN74278W	4	1	PPS		BTX	400m	0.0	5.0	.80	2.0	46n	16m	.80		0	7	74S281	MO004AA
46	T9314F	4	1	PPS		BTX	275m	0.0	5.0	.80	2.0	32n	16m	.40		0	7	F363	FL14g
47	T9314FM	4	1	PPS		BTX	275m	0.0	5.0	.80	2.0	30n	16m	.40		5	C	F363	FL14g
48	T9314J	4	1	PPS		BTX	275m	0.0	5.0	.80	2.0	32n	16m	.40		0	7	F363	DL16fa
49	T9314JM	4	1	PPS		BTX	275m	0.0	5.0	.80	2.0	30n	16m	.40		5	C	F363	DL16fa
50	CD4042AD	4	1	PPS		MCX	1.2m♦	0.0	10	.05%	9.95	150n	700u	.50		5	C	F362	MO001AE
51	CD4042AE	4	1	PPS		MCX	2.8m♦	0.0	10	.05%	9.95	200n	450u	.50		4	8	F362	MO001AC
52	CD4042AF	4	1	PPS		MCX	1.2m♦	0.0	10	.05%	9.95	150n	700u	.50		5	C	F362	MO001AC
53	CD4042AH	4	1	PPS		MCX	1.2m♦	0.0	10	.05%	9.95	150n	700u	.50		5	C	F362	CH8
54	CD4042AK	4	1	PPS		MCX	1.2m♦	0.0	10	.05%	9.95	150n	700u	.50		5	C	F362	MO004AG
55	CD4042AY	4	1	PPS		MCX	2.8m♦	0.0	10	.05%	9.95	200n	450u	.50		4	8	F362	MO001AC
56	HD1-4042A2	4	1	PPS		MCX	200m∅	0.0	10	.01%	9.99	125n				5	C	F362	ML127h
57	HD1-4042A9	4	1	PPS		MCX	200m∅	0.0	10	.01%	9.99	200n				4	8	F362	ML127h
58	HD9-4042A2	4	1	PPS		MCX	200m∅	0.0	10	.01%	9.99	125n				5	C	F362	FL14f
59	HD9-4042A9	4	1	PPS		MCX	200m∅	0.0	10	.01%	9.99	200n				4	8	F362	FL14f
60	SCL4042BC	4	1	PPS		MCX	10m♦†	0.0	10	.01%	9.99	125n				4	8	40-42B	DL16bv
61	SCL4042BD	4	1	PPS		MCX	10m♦†	0.0	10	.01%	9.99	125n				5	C	40-42B	DL16aw
62	SCL4042BE	4	1	PPS		MCX	10m♦†	0.0	10	.01%	9.99	125n				5	C	40-42B	FL23
63	SCL4042BF	4	1	PPS		MCX	10m♦†	0.0	10	.01%	9.99	125n				5	C	40-42B	CH∅
64	SCL4042BHN	4	1	PPS		MCX	10m♦†	0.0	10	.01%	9.99	125n				5	C	40-42B	DL16as
65	MC894P	4	1	PPS	1.0M	BRX	225m†	0.0	11	.57	.79	55n				0	7	F39	DL24r
66	MC14035CL	4	1	PPS	1.0M	MCX	3.2m	0.0	5.0	.01%	4.99	700n				4	8	F259	DL16cn
67	MC14035CP	4	1	PPS	1.0M	MCX	3.2m	0.0	5.0	.01%	4.99	700n				4	8	F259	DL16ew
68	MC14035AL	4	1	PPS	1.5M	MCX	4.8m	0.0	5.0	.01%	4.99	500n				5	C	F259	DL16cn
69	SIL4035BE	4	1	PPS	2.0M	MCA	14m♦	0.0	10	.05%	9.95	300n	750u$	9.5		4	8	40-35	MO001AG
70	HD1-4035A9	4	1	PPS	2.0M	MCX	1.0m♦	0.0	10	.01%	9.99	300n	850u	.50		4	8	40-35	ML127h
71	HD9-4035A9	4	1	PPS	2.0M	MCX	1.0m♦	0.0	10	.01%	9.99	300n	850u	.50		4	8	40-35	FL27
72	MB84035M	4	1	PPS	2.0M	MCX	200m	0.0	10	3.0∅	7.0	300n				4	8	F259	ML221
73	MM4635AD	4	1	PPS	2.5M	MCX	1.5u♦	0.0	5.0	.05%	9.95	500n				5	C	F315	DL16bg
74	MM4635AF	4	1	PPS	2.5M	MCX	1.5u♦	0.0	5.0	.05%	9.95	500n				5	C	F315	FL37
75	MM5635AN	4	1	PPS	2.5M	MCX	3.5u♦	0.0	5.0	.05%	9.95	700n				4	8	F315	DL16bh
76	375AJ	4	1	PPS	3.0M	BDX	1.0	0.0	15	1.8%	13	600n	7.8m	1.8		3	7	F37a	DL16bx
77	375AL	4	1	PPS	3.0M	BDX	960m	0.0	15	1.8%	13	600n	7.8m	1.8		3	7	F37a	DL16cn
78	375BL	4	1	PPS	3.0M	BDX	576m	0.0	12	1.5%	10	550n	6.3m	1.5		5	C	F37a	DL16cn
79	375CJ	4	1	PPS	3.0M	BDX	576m	0.0	12	1.5%	10	550n	6.3m	1.5		3	8	F37a	DL16bx
80	375CL	4	1	PPS	3.0M	BDX	576m	0.0	12	1.5%	10	550n	6.3m	1.5		3	8	F37a	DL16cn
81	375ML	4	1	PPS	3.0M	BDX	960m	0.0	15	1.8%	13	600n	7.8m	1.8		5	C	F37a	DL16cn
82	SN54L95N	4	1	PPS	3.0M	BTX	19m†	0.0	5.0	.70	2.0	200n	2.0m	.30		5	C	F155a	DL14v
83	SN54L99N	4	1	PPS	3.0M	BTX	19m†	0.0	5.0	.70	2.0	200n	2.0m	.30		5	C	F94	DL16ey
84	SN74L95T	4	1	PPS	3.0M	BTX	19m†	0.0	5.0	.70	2.0	200n	2.0m	.40		0	7	F155a	TO84
85	SIL4035BD	4	1	PPS	3.0M	MCA	6.0m♦	0.0	10	.05%	9.95	200n	650u$	9.5		5	C	40-35	MO001AG
86	SIL4035BF	4	1	PPS	3.0M	MCA	6.0m♦	0.0	10	.05%	9.95	200n	650u$	9.5		5	C	40-35	MO001AC
87	HD1-4035A2	4	1	PPS	3.0M	MCX	100u♦	0.0	10	.01%	9.99	200n	1.2m	.50		5	C	40-35	ML127h
88	HD9-4035A2	4	1	PPS	3.0M	MCX	100u♦	0.0	10	.01%	9.99	200n	1.2m	.50		5	C	40-35	FL27
89	MB84035	4	1	PPS	3.0M	MCX	200m	0.0	10	3.0∅	7.0	225n				5	C	F259	DL16au
90	MC14076CL	4	1	PPS	3.0M	MCX	14m♦	0.0	10	.01%	9.99§	125n	900u	.50		4	8	74-173N	DL24fj
91	MC14076CP	4	1	PPS	3.0M	MCX	14m♦	0.0	10	.01%	9.99§	125n	900u	.50		4	8	74-173N	DL16ew
92	MM54C195D	4	1	PPS	3.0M	MCX	500m∅	0.0	5.0	1.5	3.0	300n				5	C	F323	DL16bg
93	MM54C195F	4	1	PPS	3.0M	MCX	500m∅	0.0	5.0	1.5	3.0	300n				5	C	F323	FL37
94	MM54C195J	4	1	PPS	3.0M	MCX	500m∅	0.0	5.0	1.5	3.0	300n				5	C	F323	DL16cr
95	MM74C195J	4	1	PPS	3.0M	MCX	500m∅	0.0	5.0	1.5	3.0	300n				4	8	F323	DL16cr
96	MM74C195N	4	1	PPS	3.0M	MCX	500m∅	0.0	5.0	1.5	3.0	300n				4	8	F323	DL16bh
97	SCL4035BD	4	1	PPS	4.0M	MCA	300u♦	0.0	15	4.0	11	190n	3.4m∅	1.5		5	C	40-35B	MO001AE
98	SCL4035BE	4	1	PPS	4.0M	MCA	300u♦	0.0	15	4.0	11	190n	3.0m∅	1.5		4	8	40-35B	DL16cy
99	SCL4035BF	4	1	PPS	4.0M	MCA	300u♦	0.0	15	4.0	11	190n	3.4m∅	1.5		5	C	40-35B	MO004AH
100	MM54C95D	4	1	PPS	4.5M	MCX	1.5m	0.0	5.0	1.5	3.5	400n	360u	.40		5	C	F309	ML179
101	MM74C95N	4	1	PPS	4.5M	MCX	1.5m	0.0	5.0	1.5	3.5	400n	360u	.40		4	8	F309	DL14m
102	MSR4	4	1	PPS	5.0M	∅	360m	0.0	5.0	.40	3.0					0	7	F78	
103	690A	4	1	PPS	5.0M	BDX	300m	0.0	5.0	.45	2.0					0	7	F384	PL12
104	DM76L13F	4	1	PPS	5.0M	BTX	39m	0.0	5.0	.70	2.0	100n	2.0m	.30		5	C	PN16eo	FL37
105	DM76L13J	4	1	PPS	5.0M	BTX	39m	0.0	5.0	.70	2.0	100n	2.0m	.30		5	C	PN16eo	DL16cr
106	DM76L13N	4	1	PPS	5.0M	BTX	39m	0.0	5.0	.70	2.0	100n	2.0m	.30		5	C	PN16eo	DL16bh
107	DM86L13F	4	1	PPS	5.0M	BTX	39m	0.0	5.0	.70	2.0	100n	2.0m	.30		0	7	PN16eo	FL37
108	DM86L13J	4	1	PPS	5.0M	BTX	39m	0.0	5.0	.70	2.0	100n	2.0m	.30		0	7	PN16eo	DL16cr
109	DM86L13N	4	1	PPS	5.0M	BTX	39m	0.0	5.0	.70	2.0	100n	2.0m	.30		0	7	PN16eo	DL16bh
110	CD4035BCJ	4	1	PPS	5.0M	MCX	1.2m♦	0.0	15	4.0	11	150n	3.0m	1.5		4	8	40-35	DL16cr

SYMBOLS AND CODES EXPLAINED IN INTERPRETER

7. SHIFT REGISTERS

IN ORDER OF(1)No.BITS/REG(2)No.REGISTERS (3)OP.CODE(4)MAX W/C FREQ(5)STRUCT(6)TYPE No

LINE No.	6 TYPE NUMBER	ORGANIZATION 1 BITS PER REGISTER	ORGANIZATION 2 NO REGS	3 OPER. CODE	4 MAX. WORST CASE FREQ. (Hz)	5 STRU-CTURE CODE	MAX. OPER. POWER DISS. (W)	RATED POWER SUPP. SPAN NEG. (V)	RATED POWER SUPP. SPAN POS. (V)	INPUT LOGIC LEVELS MAX. '0' (V)	INPUT LOGIC LEVELS MIN. '1' (V)	MAX. PROP. DELAY (S)	MIN. OUTPUT SINK CURRENT (A)	MIN. OUTPUT SINK CURRENT @ OUT (V)	MIN. CLOCK FREQ. (Hz)	OPER TEMP RNGE CODE -	OPER TEMP RNGE CODE +	DRAWINGS FUNCTIONAL-EQUIVALENT NUMBER	DRAWINGS OUTLINE
1	CD4035BCN	4	1	PPS	5.0M	MCX	1.2m♦	0.0	15	4.0	11	150n	3.0m	1.5		4	8	40-35	DL16bh
2	CD4035BMJ	4	1	PPS	5.0M	MCX	300u♦	0.0	15	4.0	11	150n	3.4m	1.5		5	C	40-35	DL16cr
3	CD4035BMW	4	1	PPS	5.0M	MCX	300u♦	0.0	15	4.0	11	150n	3.4m	1.5		5	C	40-35	FL37a
4	CD4035CJ	4	1	PPS	5.0M	MCX	14m♦	0.0	10	.05%	9.95		590u	.50		4	8	40-35	DL16cr
5	CD4035CN	4	1	PPS	5.0M	MCX	14m♦	0.0	10	.05%	9.95		590u	.50		4	8	40-35	DL16bh
6	CD4035MD	4	1	PPS	5.0M	MCX	6.0m♦	0.0	10	.05%	9.95		870u	.50		5	C	40-35	DL16bg
7	CD4035MF	4	1	PPS	5.0M	MCX	6.0m♦	0.0	10	.05%	9.95		870u	.50		5	C	40-35	FL37
8	CD4035MJ	4	1	PPS	5.0M	MCX	6.0m♦	0.0	10	.05%	9.95		870u	.50		5	C	40-35	DL16cr
9	MM54C95F	4	1	PPS	5.0M	MCX	1.5m	0.0	5.0	1.5	3.5	400n	360u	.40		5	C	F309	FL36
10	MM54C95J	4	1	PPS	5.0M	MCX	1.5m	0.0	5.0	1.5	3.5	400n	360u	.40		5	C	F309	DL14z
11	MM54C175D	4	1	PPS	5.0M	MCX	500mØ	0.0	10	2.0	8.0	110n	8.0mØ	10		5	C	74-175N	DL16bg
12	MM54C175F	4	1	PPS	5.0M	MCX	500mØ	0.0	10	2.0	8.0	110n	8.0mØ	10		5	C	74-175N	FL37
13	MM54C175J	4	1	PPS	5.0M	MCX	500mØ	0.0	10	2.0	8.0	110n	8.0mØ	10		5	C	74-175N	DL16cr
14	MM74C95J	4	1	PPS	5.0M	MCX	1.5m	0.0	5.0	1.5	3.5	400n	360u	.40		4	8	F309	DL14z
15	MM74C175J	4	1	PPS	5.0M	MCX	500mØ	0.0	10	2.0	8.0	110n	8.0mØ	10		4	8	74-175N	DL16cr
16	MM74C175N	4	1	PPS	5.0M	MCX	500mØ	0.0	10	2.0	8.0	110n	8.0mØ	10		4	8	74-175N	DL16bh
17	SCL4035ABD	4	1	PPS	5.0M	MCX	6.0m♦	0.0	10	.05%	9.95	200n	450u%	9.5		5	C	40-35	ML4G
18	SCL4035ABF	4	1	PPS	5.0M	MCX	6.0m♦	0.0	10	.05%	9.95	200n	450u%	9.5		5	C	40-35	DL16aw
19	SCL4035ABHN	4	1	PPS	5.0M	MCX	6.0m♦	0.0	10	.05%	9.95	200n	450u%	9.5		4	8	40-35	DL16bv
20	SCL4035AF	4	1	PPS	5.0M	MCX	6.0m♦	0.0	10	.05%	9.95	200n	450u%	9.5		5	C	40-35	FL23
21	SCL4035AH	4	1	PPS	5.0M	MCX	6.0m♦	0.0	10	.05%	9.95	200n	450u%	9.5		5	C	40-35	CHØ
22	uPD4035C	4	1	PPS	5.0M	MCX	200mØØ	0.0	10	.30	.70	300n	590u	.50		4	8	40-35	MO001AC
23	HD1-74C195	4	1	PPS	5.5M	MCX	100n♦†	0.0	10	2.0	8.0	130n	10u	1.0		4	8	F320	ML127h
24	HD9-74C195	4	1	PPS	5.5M	MCX	100n♦†	0.0	10	2.0	8.0	130n	10u	1.0		4	8	F320	FL27
25	DM75L51N	4	1	PPS	6.0M	BTX	45m	0.0	5.0	.70	2.0§	120n	2.0m	.30		5	C	F444	DL16bh
26	DM85L51J	4	1	PPS	6.0M	BTX	45m	0.0	5.0	.70	2.0§	120n	3.6m	.40		0	7	F444	DL16cr
27	DM85L51W	4	1	PPS	6.0M	BTX	45m	0.0	5.0	.70	2.0§	120n	3.6m	.40		0	7	F444	FL39
28	CD40175BCJ	4	1	PPS	6.0M	MCX	240u♦	0.0	15	4.0	11	120n	8.0m	1.5		4	8	F518	DL16cr
29	CD40175BCN	4	1	PPS	6.0M	MCX	240u♦	0.0	15	4.0	11	120n	8.0m	1.5		4	8	F518	DL16bh
30	CD40175BMJ	4	1	PPS	6.0M	MCX	60u♦	0.0	15	4.0	11	120n	3.4m	1.5		5	C	F518	DL16cr
31	CD40175BMW	4	1	PPS	6.0M	MCX	60u♦	0.0	15	4.0	11	120n	3.4m	1.5		5	C	F518	FL37a
32	MC14076AL	4	1	PPS	6.0M	MCX	6.0m♦	0.0	10	.01%	9.99§	125n	900u	.50		5	C	74-173N	DL24fj
33	MM54C173D	4	1	PPS	7.0M	MCX	500mØ	0.0	10	2.0	8.0§	200n				5	C	F361	DL16bg
34	MM54C173F	4	1	PPS	7.0M	MCX	500mØ	0.0	10	2.0	8.0§	200n				5	C	F361	FL37
35	MM54C173J	4	1	PPS	7.0M	MCX	500mØ	0.0	10	2.0	8.0§	200n				5	C	F361	DL16cr
36	MM74C173J	4	1	PPS	7.0M	MCX	500mØ	0.0	10	2.0	8.0§	200n				4	8	F361	DL16cr
37	MM74C173N	4	1	PPS	7.0M	MCX	500mØ	0.0	10	2.0	8.0§	200n				4	8	F361	DL16bh
38	FCJ221	4	1	PPS	8.0M		250m		6.0	0.0	6.0					0	7	F371	ML71b
39	SCL4076BC	4	1	PPS	8.0M	MCA	300u♦	0.0	15	4.0	11	90n	3.4mØ	1.5		5	C	74-173N	DL16cx
40	SCL4076BD	4	1	PPS	8.0M	MCA	300u♦	0.0	15	4.0	11	90n	3.4mØ	1.5		5	C	74-173N	MO001AE
41	SCL4076BE	4	1	PPS	8.0M	MCA	300u♦	0.0	15	4.0	11	90n	3.0mØ	1.5		4	8	74-173N	DL16cy
42	SCL4076BF	4	1	PPS	8.0M	MCA	300u♦	0.0	15	4.0	11	90n	3.4mØ	1.5		5	C	54-173W	MO004AH
43	SCL4076BHN	4	1	PPS	8.0M	MCA	300u♦	0.0	15	4.0	11	90n	3.4mØ	1.5		5	C	40-42B	CHØ
44	CD4076BCJ	4	1	PPS	8.7M	MCX	1.2m♦	0.0	15	4.0	11§	160n	3.0m	1.5		4	8	F516	DL16cr
45	CD4076BCN	4	1	PPS	8.7M	MCX	1.2m♦	0.0	15	4.0	11§	160n	3.0m	1.5		4	8	F516	DL16bh
46	CD4076BMJ	4	1	PPS	8.7M	MCX	300u♦	0.0	15	4.0	11§	160n	3.4m	1.5		5	C	F516	DL16cr
47	CD4076BMW	4	1	PPS	8.7M	MCX	300u♦	0.0	15	4.0	11§	160n	3.4m	1.5		5	C	F516	FL37a
48	CD40104BD	4	1	PPS	9.0M	MCX	500mØ	0.0	10	4.5†	5.5	150n	2.6m	.50		5	C	40-104B	MO001AE
49	CD40104BE	4	1	PPS	9.0M	MCX	500mØ	0.0	10	4.5†	5.5	150n	2.6m	.50		4	8	40-104B	MO001AC
50	CD40104BF	4	1	PPS	9.0M	MCX	500mØ	0.0	10	4.5†	5.5	150n	2.6m	.50		5	C	40-104B	MO001AC
51	CD40104BH	4	1	PPS	9.0M	MCX		0.0	10	4.5†	5.5	150n	2.6m	.50		5	C	PN16fk	CHØ
52	CD40104BK	4	1	PPS	9.0M	MCX	500mØ	0.0	10	4.5†	5.5	150n	2.6m	.50		5	C	PN16fk	MO004AG
53	9200-1-4L	4	1	PPS	10M	BTX	105m	0.0	5.0	.80	1.4	65n	2.1m	.30		5	C	74-195	FL14
54	9200-1-7B	4	1	PPS	10M	BTX	105m	0.0	5.0	.80	1.4	65n	2.1m	.30		5	C	74-195	DL16au
55	9200-9-4L	4	1	PPS	10M	BTX	210m	0.0	5.0	.75	1.6	65n	2.3m	.35		0	7	74-195	FL14
56	9200-9-7B	4	1	PPS	10M	BTX	110m	0.0	5.0	.75	1.6	65n	2.3m	.35		0	7	74-195	DL16au
57	FLJ231-7494	4	1	PPS	10M	BTX	305m	0.0	5.0	.80	2.0	40n	16m	.40		0	7	F467	DLØ
58	FLJ235-8494	4	1	PPS	10M	BTX	305m	0.0	5.0	.80	2.0	40n	16m	.40		2	8	F467	DLØ
59	M204	4	1	PPS	10M	BTX	200m			.40	2.0	35n				0	7		PLØ
60	MB452	4	1	PPS	10M	BTX	200m†	0.0	5.0	.80	2.0	55n				0	7	F389	DL16au
61	MB452M	4	1	PPS	10M	BTX	200m†	0.0	5.0	.80	2.0	55n				0	7	F389	ML221
62	MC7496L	4	1	PPS	10M	BTX	240m†	0.0	5.0	.40%	2.4	40n	16m	.40		0	7	74-96N	DL16cn
63	N7494R	4	1	PPS	10M	BTX	175m†	0.0	5.0	.80	2.0	40n	16m	.40		0	7	F92	ML21b
64	RCP3271B	4	1	PPS	10M	BTX	450m♦	0.0	5.0	.90%	2.1	60n	15m	.40		0	7	F124	DL16az
65	S5494E	4	1	PPS	10M	BTX	175m†	0.0	5.0	.80	2.0	40n	16m	.40		5	C	F92	ML61c
66	S5494R	4	1	PPS	10M	BTX	175m†	0.0	5.0	.80	2.0	40n	16m	.40		5	C	F92	ML21b
67	TL7494N	4	1	PPS	10M	BTX	304m	0.0	5.0	.80	2.0	40n	16m	.40		0	7	PN16dk	ML48b
68	40194BDC	4	1	PPS	10M	MCX	3.0m♦	0.0	15	4.0	11	64n	4.5m	1.5		4	8	40-194B	DL16df
69	40194BDM	4	1	PPS	10M	MCX	3.0m♦	0.0	15	4.0	11	64n	4.5m	1.5		5	C	40-194B	DL16df
70	40194BFC	4	1	PPS	10M	MCX	3.0m♦	0.0	15	4.0	11	64n	4.5m	1.5		4	8	40-194B	FL14j
71	40194BFM	4	1	PPS	10M	MCX	3.0m♦	0.0	15	4.0	11	64n	4.5m	1.5		5	C	40-194B	FL14j
72	40194BPC	4	1	PPS	10M	MCX	3.0m♦	0.0	15	4.0	11	64n	4.5m	1.5		4	8	40-194B	DL16dh
73	40195BDC	4	1	PPS	10M	MCX	9.0m♦	0.0	15	4.0	11	64n	4.5m	1.5		4	8	74-195N	DL16df
74	40195BDM	4	1	PPS	10M	MCX	9.0m♦	0.0	15	4.0	11	64n	4.5m	1.5		5	C	74-195N	DL16df
75	40195BFC	4	1	PPS	10M	MCX	9.0m♦	0.0	15	4.0	11	64n	4.5m	1.5		4	8	54-195W	FL14j
76	40195BFM	4	1	PPS	10M	MCX	9.0m♦	0.0	15	4.0	11	64n	4.5m	1.5		5	C	54-195W	FL14j
77	40195BPC	4	1	PPS	10M	MCX	9.0m♦	0.0	15	4.0	11	64n	4.5m	1.5		4	8	74-195N	DL16dh
78	HD1-54C195	4	1	PPS	10M	MCX	100n♦†	0.0	10	2.0	8.0	130n	10u	1.0		5	C	F320	ML127h
79	HD1-54C95	4	1	PPS	10M	MCX	100n♦†	0.0	10	2.0	8.0	160n	10u	1.0		5	C	F309	ML93c
80	HD1-74C95	4	1	PPS	10M	MCX	100n♦†	0.0	10	2.0	8.0	160n	10u	1.0		4	8	F309	ML93c
81	HD9-54C195	4	1	PPS	10M	MCX	100n♦†	0.0	10	2.0	8.0	130n	10u	1.0		5	C	F320	FL27
82	HD9-54C95	4	1	PPS	10M	MCX	100n♦†	0.0	10	2.0	8.0	160n	10u	1.0		5	C	F309	TO86
83	HD9-74C95	4	1	PPS	10M	MCX	100n♦†	0.0	10	2.0	8.0	160n	10u	1.0		4	8	F309	TO86
84	DM54L98N	4	1	PPS	12M	BTX	40m	0.0	5.0	.70	2.0	100n	2.0m	.30		5	C	F443	DL16bh
85	DM74L98J	4	1	PPS	12M	BTX	40m	0.0	5.0	.70	2.0	100n	3.6m	.40		0	7	F443	DL16cr
86	DM74L98W	4	1	PPS	12M	BTX	40m	0.0	5.0	.70	2.0	100n	3.6m	.40		0	7	F443	FL39
87	CD40194BD	4	1	PPS	12M	MCX	500mØ	0.0	15	6.7†	8.2	110n	6.8m†	1.5		5	C	PN16fm	MO001AE
88	CD40194BE	4	1	PPS	12M	MCX	500mØ	0.0	15	6.7†	8.2	110n	6.8m†	1.5		4	8	40-194B	MO001AC
89	CD40194BF	4	1	PPS	12M	MCX	500mØ	0.0	15	6.7†	8.2	110n	6.8m†	1.5		5	C	40-194B	MO001AC
90	CD40194BH	4	1	PPS	12M	MCX		0.0	15	6.7†	8.2	110n	6.8m†	1.5		5	C	PN16fm	CHØ
91	CD40194BK	4	1	PPS	12M	MCX	500mØ	0.0	15	6.7†	8.2	110n	6.8m†	1.5		5	C	PN16fm	MO004AG
92	HD1-54C173	4	1	PPS	12M	MCX	500m	0.0	10	2.0	8.0§	180n	10u	1.0	7.0M	5	C	F361	ML127h
93	HD1-54C175	4	1	PPS	12M	MCX		0.0	10	2.0	8.0					5	C	74-175N	ML127h
94	HD1-74C173	4	1	PPS	12M	MCX	500m	0.0	10	2.0	8.0§	180n	10u	1.0	7.0M	4	8	F361	ML127h
95	HD1-74C175	4	1	PPS	12M	MCX		0.0	10	2.0	8.0					0	7	74-175N	ML127h
96	HD9-54C173	4	1	PPS	12M	MCX	500m	0.0	10	2.0	8.0§	180n	10u	1.0	7.0M	5	C	F361	FL14f
97	HD9-54C175	4	1	PPS	12M	MCX		0.0	10	2.0	8.0					5	C	74-175N	FL14f
98	HD9-74C173	4	1	PPS	12M	MCX	500m	0.0	10	2.0	8.0§	180n	10u	1.0	7.0M	4	8	F361	FL14f
99	HD9-74C175	4	1	PPS	12M	MCX		0.0	10	2.0	8.0					0	7	74-175N	FL14f
100	DM54L95F	4	1	PPS	14M	BTX	40m	0.0	5.0	.70	2.0	90n	2.0m	.30		5	C	F155a	FL43
101	DM54L95N	4	1	PPS	14M	BTX	40m	0.0	5.0	.70	2.0	90n	2.0m	.30		5	C	F155a	DL14m
102	DM74L95F	4	1	PPS	14M	BTX	40m	0.0	5.0	.70	2.0	90n	2.0m	.30		0	7	F155a	FL43
103	DM74L95J	4	1	PPS	14M	BTX	40m	0.0	5.0	.70	2.0	90n	3.6m	.40		0	7	F155a	DL14z
104	9300-1-3L	4	1	PPS	15M	BTX	300m†	0.0	5.0	.90	1.4	45n	8.5m	.40		5	C	74-195	FL14a
105	9300-9-3L	4	1	PPS	15M	BTX	300m†	0.0	5.0	.85	1.6	45n	9.0m	.45		0	7	74-195	FL14a
106	DM75L51F	4	1	PPS	15M	BTX	30m†	0.0	5.0	.70	2.0§	120n	3.6m	.40	6.0M	5	C	F361	FL37
107	DM85L51F	4	1	PPS	15M	BTX	30m†	0.0	5.0	.70	2.0§	120n	3.6m	.40	6.0M	0	7	F361	FL37
108	DM7600D	4	1	PPS	15M	BTX		0.0	5.0	.90	1.4	45n	7.4m	.40		5	C	PN16cy	ML63
109	DM8600D	4	1	PPS	15M	BTX		0.0	5.0	.85	1.6	45n	9.6m	.45		0	7	PN16cy	ML63
110	DM8600N	4	1	PPS	15M	BTX		0.0	5.0	.85	1.6	45n	9.6m	.45		0	7	PN16cy	ML69

SYMBOLS AND CODES EXPLAINED IN INTERPRETER

7. SHIFT REGISTERS

IN ORDER OF(1)No.BITS/REG(2)No.REGISTERS (3)OP.CODE(4)MAX W/C FREQ(5)STRUCT(6)TYPE No

LINE No.	6 TYPE NUMBER	ORGANIZATION 1 BITS PER REGISTER	ORGANIZATION 2 NO REGS	3 OPER. CODE	4 MAX. WORST CASE FREQ. (Hz)	5 STRU-CTURE CODE	MAX. OPER. POWER DISS. (W)	RATED POWER SUPP. SPAN NEG. (V)	RATED POWER SUPP. SPAN POS. (V)	INPUT LOGIC LEVELS MAX. '0' (V)	INPUT LOGIC LEVELS MIN. '1' (V)	MAX. PROP. DELAY (S)	MIN. OUTPUT SINK CURRENT (A)	MIN. OUTPUT SINK CURRENT @ OUT (V)	MIN. CLOCK FREQ. (Hz)	OPER TEMP RNGE CODE -	OPER TEMP RNGE CODE +	DRAWINGS FUNCTIONAL EQUIVALENT NUMBER	DRAWINGS OUTLINE
1	FJB93L00	4	1	PPS	15M	BTX	75m†	0.0	5.0	.70	2.0	35n	3.2m	.30		0	7	74-195	ML4e
2	FLJ491-49702	4	1	PPS	15M	BTX	170m	0.0	5.0	.80	2.0	20n	16m	.40		0	7	PN16em	DL16ap
3	FLJ495-49802	4	1	PPS	15M	BTX	170m	0.0	5.0	.80	2.0	20n	16m	.40		2	8	PN16em	DL16ap
4	N8270J	4	1	PPS	15M	BTX	247mØ	0.0	5.0	.40%	2.6	40n	11m	.40		0	7	F124	FL19
5	N8271E	4	1	PPS	15M	BTX	344mØ	0.0	5.0	.40%	2.6	40n	11m	.40		0	7	F124a	ML61c
6	N8271R	4	1	PPS	15M	BTX	344mØ	0.0	5.0	.40%	2.6	40n	11m	.40		0	7	F124a	FL18
7	RC9300B	4	1	PPS	15M	BTX	300m†	0.0	5.0	.85	1.8	45n	600u	.45		0	7	74-195	DL16fm
8	RC54178A	4	1	PPS	15M	BTX	247m	0.0	5.0	.40%	2.6	40n	11n	.40		5	C	74-178N	DL14g
9	RC54178F	4	1	PPS	15M	BTX	247m	0.0	5.0	.40%	2.6	40n	11n	.40		5	C	74-178N	DL14y
10	RC54178W	4	1	PPS	15M	BTX	247m	0.0	5.0	.40%	2.6	40n	11n	.40		5	C	54-178W	FL24
11	RC54179B	4	1	PPS	15M	BTX	344m	0.0	5.0	.40%	2.6	40n	11n	.40		5	C	74-179N	DL16fm
12	RC54179F	4	1	PPS	15M	BTX	344m	0.0	5.0	.40%	2.6	40n	11n	.40		5	C	74-179N	DL16cu
13	RC54179W	4	1	PPS	15M	BTX	344m	0.0	5.0	.40%	2.6	40n	11n	.40		5	C	54-179W	FL25
14	RCP9300E	4	1	PPS	15M	BTX	300m†	0.0	5.0	.85	1.8	45n	600u	.45		0	7	74-195	FL25
15	S8270J	4	1	PPS	15M	BTX	247mØ	0.0	5.0	.40%	2.6	40n	11m	.40		5	C	F124	FL19
16	S8271E	4	1	PPS	15M	BTX	344mØ	0.0	5.0	.40%	2.6	40n	11m	.40		5	C	F124a	ML61c
17	S8271R	4	1	PPS	15M	BTX	344mØ	0.0	5.0	.40%	2.6	40n	11m	.40		5	C	F124a	FL18
18	FLJ161-7490	4	1	PPS	16M	BTX	210m	0.0	15	4.5	7.5	18n	18m	1.7		0	7	F321	DL16by
19	FLJ165-8490	4	1	PPS	16M	BTX	210m	0.0	15	4.5	7.5	18n	18m	1.7		2	8	F321	DL16by
20	CD4035BK	4	1	PPS	16M	MCX	500m⊠	0.0	15	4.0	11	80n	6.8m†	1.5		5	C	F509	MO004AG
21	54LS95BJ	4	1	PPS	20M	BTD	105m	0.0	5.0	.70	2.0	40n	4.0m	.40		5	C	F402	DL14f
22	54LS95BW	4	1	PPS	20M	BTD	105m	0.0	5.0	.70	2.0	40n	4.0m	.40		5	C	F402	FL11c
23	74LS95BJ	4	1	PPS	20M	BTD	105m	0.0	5.0	.80	2.0	40n	4.0m	.40		0	7	74-95N	DL14f
24	74LS95BW	4	1	PPS	20M	BTD	105m	0.0	5.0	.80	2.0	40n	4.0m	.40		0	7	54-95W	FL11c
25	DM54LS295AJ	4	1	PPS	20M	BTD	125m	0.0	5.0	.70	2.0§	70n	4.0m	.40		5	C	74LS295N	DL14z
26	DM54LS295AN	4	1	PPS	20M	BTD	125m	0.0	5.0	.70	2.0§	70n	4.0m	.40		5	C	74LS295N	DL14m
27	DM54LS295AW	4	1	PPS	20M	BTD	125m	0.0	5.0	.70	2.0§	70n	4.0m	.40		5	C	74LS295N	FL41
28	DM74LS295AJ	4	1	PPS	20M	BTD	125m	0.0	5.0	.80	2.0§	70n	4.0m	.40		0	7	74LS295N	DL14z
29	DM74LS295AN	4	1	PPS	20M	BTD	125m	0.0	5.0	.80	2.0§	70n	4.0m	.40		0	7	74LS295N	DL14m
30	DM74LS295AW	4	1	PPS	20M	BTD	125m	0.0	5.0	.80	2.0§	70n	4.0m	.40		0	7	74LS295N	FL41
31	MIC5495AJ	4	1	PPS	20M	BTX	250m†	0.0	5.0	.80	2.0	35n	16m	.40		5	C	F70	TO116
32	MIC6495AJ	4	1	PPS	20M	BTX	250m†	0.0	5.0	.80	2.0	35n	16m	.40		4	8	F70	TO116
33	MIC7495AJ	4	1	PPS	20M	BTX	250m†	0.0	5.0	.80	2.0	35n	16m	.40		0	7	F70	TO116
34	MIC7495AN	4	1	PPS	20M	BTX	250m†	0.0	5.0	.80	2.0	35n	16m	.40		0	7	F70	DL⊠
35	SN5495N	4	1	PPS	20M	BTX	250m†	0.0	5.0	.80	2.0	35n	16m	.40		5	C	F70	DL14v
36	SN5495S	4	1	PPS	20M	BTX	250m†	0.0	5.0	.80	2.0	35n	16m	.40		5	C	F70	TO84
37	SN7495J	4	1	PPS	20M	BTX	250m†	0.0	5.0	.80	2.0	35n	16m	.40		0	7	F70	DL14q
38	SN7495N	4	1	PPS	20M	BTX	250m†	0.0	5.0	.80	2.0	35n	16m	.40		0	7	F70	DL14v
39	SN7495S	4	1	PPS	20M	BTX	250m†	0.0	5.0	.80	2.0	35n	16m	.40		0	7	F70	TO84
40	SW5495J	4	1	PPS	20M	BTX	360m	0.0	5.0	.80	2.0	35n	1.6m	.40		5	C	F36	ML93
41	SW7495J	4	1	PPS	20M	BTX	410m	0.0	5.0	.80	2.0	35n	1.6m	.40		0	7	F36	ML93
42	SW7495N	4	1	PPS	20M	BTX	410m	0.0	5.0	.80	2.0	35n	1.6m	.40		0	7	F36	ML64a
43	US5495A	4	1	PPS	20M	BTX	250m†	0.0	5.0	.80	2.0	40n	1.6m	.40		5	C	F70a	ML86a
44	US5495J	4	1	PPS	20M	BTX	250m†	0.0	5.0	.80	2.0	40n	1.6m	.40		5	C	F70a	FL20
45	US7495A	4	1	PPS	20M	BTX	250m†	0.0	5.0	.80	2.0	40n	1.6m	.40		0	7	F70a	ML86a
46	US7495J	4	1	PPS	20M	BTX	250m†	0.0	5.0	.80	2.0	40n	1.6m	.40		0	7	F70a	FL20
47	MC7270L	4	1	PPS	22M	BTX	180m†	0.0	5.0	.40%	2.6	40n	12m	.40		0	7	F235	TO116
48	MC7270P	4	1	PPS	22M	BTX	180m†	0.0	5.0	.40%	2.6	40n	12m	.40		0	7	F235	DL14aq
49	MC7271L	4	1	PPS	22M	BTX	180m†	0.0	5.0	.40%	2.6	40n	12m	.40		0	7	F235a	DL16eq
50	MC7271P	4	1	PPS	22M	BTX	180m†	0.0	5.0	.40%	2.6	40n	12m	.40		0	7	F235a	DL16br
51	MC8270L	4	1	PPS	22M	BTX	180m†	0.0	5.0	.40%	2.6	40n	12m	.40		5	C	F235	TO116
52	MC8271L	4	1	PPS	22M	BTX	180m†	0.0	5.0	.40%	2.6	40n	12m	.40		5	C	F235a	DL16eq
53	54LS395AJ	4	1	PPS	25M	BTD	145m	0.0	5.0	.70	2.0§	35n	12m	.40		5	C	74LS395	DL⊠
54	54LS395AW	4	1	PPS	25M	BTD	145m	0.0	5.0	.70	2.0§	35n	12m	.40		5	C	54LS395	FL14h
55	74LS395AJ	4	1	PPS	25M	BTD	145m	0.0	5.0	.80	2.0§	35n	12m	.40		0	7	F283	DL⊠
56	74LS395AW	4	1	PPS	25M	BTD	145m	0.0	5.0	.80	2.0§	35n	12m	.40		0	7	F283	FL14h
57	DM54LS194AN	4	1	PPS	25M	BTD	115m	0.0	5.0	.70	2.0	30n	4.0m	.40		5	C	74-194	DL16bh
58	DM74LS194AJ	4	1	PPS	25M	BTD	115m	0.0	5.0	.80	2.0	30n	4.0m	.40		0	7	74-194	DL16cr
59	DM74LS194AW	4	1	PPS	25M	BTD	115m	0.0	5.0	.80	2.0	30n	4.0m	.40		0	7	74-194	FL39
60	DM8551J	4	1	PPS	25M	BTX	360m	0.0	5.0	.80	2.0§	28n	16m	.40		0	7	F444	DL16cr
61	DM8551W	4	1	PPS	25M	BTX	360m	0.0	5.0	.80	2.0§	28n	16m	.40		0	7	F444	FL39
62	FJB9300	4	1	PPS	25M	BTX	300m†	0.0	5.0	.80	2.0	45n	9.6m	.40		0	7	F376	ML127g
63	FLJ191-7495A	4	1	PPS	25M	BTX	330m	0.0	5.0	.80	2.0	32n	16m	.40		0	7	F155	DL⊠
64	FLJ195-8495A	4	1	PPS	25M	BTX	330m	0.0	5.0	.80	2.0	32n	16m	.40		2	8	F155	DL⊠
65	FLJ551-74194	4	1	PPS	25M	BTX	330m	0.0	5.0	.80	2.0	30n	16m	.40		0	7	F469	DL⊠
66	FLJ555-84194	4	1	PPS	25M	BTX	330m	0.0	5.0	.80	2.0	30n	16m	.40		2	8	F469	DL⊠
67	GFB7495	4	1	PPS	25M	BTX	195m†	0.0	5.0	.80	2.0	32n	16m	.40		0	7	F155	ML86c
68	GFB74195	4	1	PPS	25M	BTX	300m†	0.0	5.0	.80	2.0	45n	9.6m	.40		0	7	F376	ML127g
69	MC8300L	4	1	PPS	25M	BTX	300m†	0.0	5.0	.45%	2.4	45n	12m	.45		0	7	F37	DL16bp
70	MC8300P	4	1	PPS	25M	BTX	300m†	0.0	5.0	.45%	2.4	45n	12m	.45		0	7	F37	DL16ev
71	MC9300L	4	1	PPS	25M	BTX	300m†	0.0	5.0	.40%	2.4	45n	12m	.40		5	C	F37	DL16bp
72	MIC9300-1D	4	1	PPS	25M	BTX	300m†	0.0	5.0	.90	1.4	45n	8.5m	.40		5	C	74-195	DL16fg
73	MIC9300-5D	4	1	PPS	25M	BTX	300m†	0.0	5.0	.85	1.6	45n	9.2m	.45		0	7	74-195	DL16fg
74	MIC54194J	4	1	PPS	25M	BTX	195m†	0.0	5.0	.80	2.0	30n	16m	.40		5	C	F89a	DL16fg
75	MIC64194J	4	1	PPS	25M	BTX	195m†	0.0	5.0	.80	2.0	30n	16m	.40		4	8	F89a	TO116
76	MIC74194J	4	1	PPS	25M	BTX	195m†	0.0	5.0	.80	2.0	30n	16m	.40		0	7	F89a	DL16fg
77	MIC74194N	4	1	PPS	25M	BTX	195m†	0.0	5.0	.80	2.0	30n	16m	.40		0	7	F89a	DL16fo
78	N74194R	4	1	PPS	25M	BTX	195m†	0.0	5.0	.80	2.0	30n	16m	.40		0	7	F132	ML21b
79	RC5495A	4	1	PPS	25M	BTX	410m	0.0	5.0	.80	2.0	32n	16m	.40		5	C	74-95N	DL14g
80	RC5495F	4	1	PPS	25M	BTX	410m	0.0	5.0	.80	2.0	32n	16m	.40		5	C	74-95N	DL14y
81	RC54194B	4	1	PPS	25M	BTX	315m♦	0.0	5.0	.80	2.0	30n	16m	.40		5	C	74-194N	DL16fm
82	RC54194F	4	1	PPS	25M	BTX	315m♦	0.0	5.0	.80	2.0	30n	16m	.40		5	C	74-194N	DL16fi
83	RC54194W	4	1	PPS	25M	BTX	315m♦	0.0	5.0	.80	2.0	30n	16m	.40		5	C	54-194W	FL25
84	S54194E	4	1	PPS	25M	BTX	195m†	0.0	5.0	.80	2.0	30n	16m	.40		5	C	F132	ML61c
85	S54194R	4	1	PPS	25M	BTX	195m†	0.0	5.0	.80	2.0	30n	16m	.40		5	C	F132	ML21b
86	SFC4175E	4	1	PPS	25M	BTX	150m	0.0	5.0	.80	2.0	35n				0	7	74-175N	DL16ey
87	SFC4175EM	4	1	PPS	25M	BTX	150m	0.0	5.0	.80	2.0	35n				5	C	74-175N	DL16ey
88	SFC4175ET	4	1	PPS	25M	BTX	150m	0.0	5.0	.80	2.0	35n				2	8	74-175N	DL16ey
89	SN54175N	4	1	PPS	25M	BTX	225m	0.0	5.0	.80	2.0	35n	16m	.40		5	C	74-175N	DL16ey
90	SN54178N	4	1	PPS	25M	BTX	230m†	0.0	5.0	.80	2.0	36n	16m	.40		5	C	F191	DL14v
91	SN54179N	4	1	PPS	25M	BTX	230m†	0.0	5.0	.80	2.0	36n	16m	.40		5	C		DL16ey
92	SN74175W	4	1	PPS	25M	BTX	225m	0.0	5.0	.80	2.0	35n	16m	.40		0	7	74-175N	MO004AG
93	SN74178W	4	1	PPS	25M	BTX	230m†	0.0	5.0	.80	2.0	36n	16m	.40		0	7	F191	MO004AA
94	SN74179W	4	1	PPS	25M	BTX	230m†	0.0	5.0	.80	2.0	36n	16m	.40		0	7		MO004AG
95	TMSR4A	4	1	PPS	25M	BTX	250m	0.0	5.0	.22†	3.3	35n				0	7	F342	
96	TSR2514J	4	1	PPS	25M	BTX	200m†	0.0	5.0	.45%	3.2	30n	10m	.45		0	7	F55	TO116
97	SN54LS95AN	4	1	PPS	28M	BTX	85m	0.0	5.0	.70	2.0	48n	4.0m	.40		5	C	F70	DL14v
98	SN54LS194J	4	1	PPS	28M	BTX	100m	0.0	5.0	.70	2.0	54n	4.0m	.40		5	C	F89a	DL16fh
99	SN54LS194N	4	1	PPS	28M	BTX	100m	0.0	5.0	.70	2.0	54n	4.0m	.40		5	C	F89a	DL16ey
100	SN54LS194W	4	1	PPS	28M	BTX	100m	0.0	5.0	.70	2.0	54n	4.0m	.40		5	C	F89a	MO004AG
101	SN54LS195J	4	1	PPS	28M	BTX	85m	0.0	5.0	.80	2.0	47n	8.0m	.50		5	C	74-195	DL16fh
102	SN54LS195N	4	1	PPS	28M	BTX	85m	0.0	5.0	.80	2.0	47n	8.0m	.50		5	C	74-195	DL16ey
103	SN54LS195W	4	1	PPS	28M	BTX	85m	0.0	5.0	.80	2.0	47n	8.8m	.50		5	C	74-195	MO004AG
104	SN54LS295J	4	1	PPS	28M	BTX	60m†	0.0	5.0	.70	2.0§	70n	4.0m	.40		5	C	F70	DL14r
105	SN54LS295N	4	1	PPS	28M	BTX	60m†	0.0	5.0	.70	2.0§	70n	4.0m	.40		5	C	F70	DL14v
106	SN54LS295W	4	1	PPS	28M	BTX	60m†	0.0	5.0	.70	2.0§	70n	4.0m	.40		5	C	F70	MO004AA
107	SN74LS194J	4	1	PPS	28M	BTX	100m	0.0	5.0	.80	2.0	54n	8.0m	.50		0	7	F89a	DL16fh
108	SN74LS194N	4	1	PPS	28M	BTX	100m	0.0	5.0	.80	2.0	54n	8.0m	.50		0	7	F89a	DL16ey
109	SN74LS194W	4	1	PPS	28M	BTX	100m	0.0	5.0	.80	2.0	54n	8.0m	.50		0	7	F89a	MO004AG
110	SN74LS195J	4	1	PPS	28M	BTX	85m	0.0	5.0	.70	2.0	47n	4.0m	.40		0	7	74-195N	DL16fh

SYMBOLS AND CODES EXPLAINED IN INTERPRETER

7. SHIFT REGISTERS

IN ORDER OF(1)No.BITS/REG(2)No.REGISTERS (3)OP.CODE(4)MAX W/C FREQ(5)STRUCT(6)TYPE No

LINE No.	6 TYPE NUMBER	ORGANIZATION 1 BITS PER REGISTER	ORGANIZATION 2 NO REGS	3 OPER. CODE	4 MAX. WORST CASE FREQ. (Hz)	5 STRU-CTURE CODE	MAX. OPER. POWER DISS. (W)	RATED POWER SUPP. SPAN NEG. (V)	RATED POWER SUPP. SPAN POS. (V)	INPUT LOGIC LEVELS MAX. '0' (V)	INPUT LOGIC LEVELS MIN. '1' (V)	MAX. PROP. DELAY (S)	MIN. OUTPUT SINK CURRENT (A)	MIN. OUTPUT SINK CURRENT @ OUT (V)	MIN. CLOCK FREQ. (Hz)	OPER TEMP RNGE CODE -	OPER TEMP RNGE CODE +	DRAWINGS FUNCTIONAL EQUIVALENT NUMBER	DRAWINGS OUTLINE
1	SN74LS195N	4	1	PPS	28M	BTX	85m	0.0	5.0	.70	2.0	47n	4.0m	.40		0	7	74-195N	DL16ey
2	SN74LS195W	4	1	PPS	28M	BTX	85m	0.0	5.0	.70	2.0	47n	4.0m	.40		0	7	74-195	MO004AG
3	SN74LS295J	4	1	PPS	28M	BTX	60m†	0.0	5.0	.80	2.0§	70n	8.0m	.50		0	7	F70	DL14r
4	SN74LS295N	4	1	PPS	28M	BTX	60m†	0.0	5.0	.80	2.0§	70n	8.0m	.50		0	7	F70	DL14v
5	SN74LS295W	4	1	PPS	28M	BTX	60m†	0.0	5.0	.80	2.0§	70n	8.0m	.50		0	7	F70	MO004AA
6	54LS194AJ	4	1	PPS	30M	BTD	115m	0.0	5.0	.70	2.0	30n	4.0m	.40		5	C	74-194N	DLØ
7	54LS194AW	4	1	PPS	30M	BTD	115m	0.0	5.0	.70	2.0	30n	4.0m	.40		5	C	54-194W	FL14h
8	54LS195AJ	4	1	PPS	30M	BTD	105m♦	0.0	5.0	.70	2.0	33n	4.0m	.40		5	C	74-195N	DLØ
9	54LS195AW	4	1	PPS	30M	BTD	105m♦	0.0	5.0	.70	2.0	33n	4.0m	.40		5	C	74-195	FL14h
10	54LS295AJ	4	1	PPS	30M	BTD	125m♦	0.0	5.0	.70	2.0§	45n	4.0m	.40		5	C	74LS295	DL14f
11	54LS295AW	4	1	PPS	30M	BTD	125m♦	0.0	5.0	.70	2.0§	45n	4.0m	.40		5	C	54LS295	FL11c
12	74LS194AJ	4	1	PPS	30M	BTD	115m	0.0	5.0	.80	2.0	30n	4.0m	.40		0	7	74-194	DLØ
13	74LS194AW	4	1	PPS	30M	BTD	115m	0.0	5.0	.80	2.0	30n	4.0m	.40		0	7	54-194W	FL14h
14	74LS195AJ	4	1	PPS	30M	BTD	105m♦	0.0	5.0	.80	2.0	33n	4.0m	.40		0	7	74-195N	DLØ
15	74LS195AW	4	1	PPS	30M	BTD	105m♦	0.0	5.0	.80	2.0	33n	4.0m	.40		0	7	54-195W	FL14h
16	74LS295AJ	4	1	PPS	30M	BTD	125m♦	0.0	5.0	.80	2.0§	45n	4.0m	.40		0	7	74LS295	DL14f
17	74LS295AW	4	1	PPS	30M	BTD	125m♦	0.0	5.0	.80	2.0§	45n	4.0m	.40		0	7	54LS295	FL11c
18	DM54LS195AN	4	1	PPS	30M	BTD	105m	0.0	5.0	.70	2.0	30n	4.0m	.40		5	C	74-195	DL16bh
19	DM74LS195AJ	4	1	PPS	30M	BTD	105m	0.0	5.0	.80	2.0	30n	4.0m	.40		0	7	74-195	DL16cr
20	DM74LS195AW	4	1	PPS	30M	BTD	105m	0.0	5.0	.80	2.0	30n	4.0m	.40		0	7	74-195	FL39
21	M74LS173P	4	1	PPS	30M	BTD	140m	0.0	5.0	0.8	2.0	40n	8.0m	0.5		0	7	F482	DL16fe
22	SN74LS95BW	4	1	PPS	30M	BTD	65m†	0.0	5.0	.80	2.0	27n	4.0m	.40		0	7	54-95W	MO004AA
23	SN74LS175W	4	1	PPS	30M	BTD	90m	0.0	5.0	.80	2.0	28n	8.0m	.50		0	7	74-175N	MO004AG
24	SN74LS194AW	4	1	PPS	30M	BTD	115m	0.0	5.0	.80	2.0	26n	4.0m	.40		0	7	54-194W	FL63
25	SN74LS195AW	4	1	PPS	30M	BTD	70m†	0.0	5.0	.80	2.0	26n	4.0m	.40		0	7	54-195W	MO004AG
26	SN74LS295AW	4	1	PPS	30M	BTD	125m	0.0	5.0	.80	2.0§	30n	4.0m	.40		0	7	54LS295	MO004AA
27	SN74LS379W	4	1	PPS	30M	BTD	90m	0.0	5.0	.80	2.0	22n	8.0m	.50		0	7	F452	FL63
28	SN74LS395W	4	1	PPS	30M	BTD	145m	0.0	5.0	.80	2.0§	35n	4.0m	.40		0	7	54LS395	FL63
29	DM7613J	4	1	PPS	30M	BTX	380m	0.0	5.0	.80	2.0	33n	16m	.40	20M	5	C	PN16eo	DL16cr
30	DM7613N	4	1	PPS	30M	BTX	380m	0.0	5.0	.80	2.0	33n	16m	.40	20M	5	C	PN16eo	DL16bh
31	DM7613W	4	1	PPS	30M	BTX	380m	0.0	5.0	.80	2.0	33n	16m	.40	20M	5	C	PN16eo	FL39
32	DM8300J	4	1	PPS	30M	BTX	460m	0.0	5.0	.80	2.0	30n	16m	.40		0	7	PN16ff	DL16cr
33	DM8300W	4	1	PPS	30M	BTX	460m	0.0	5.0	.80	2.0	30n	16m	.40		0	7	PN16ff	FL39
34	DM8613J	4	1	PPS	30M	BTX	380m	0.0	5.0	.80	2.0	33n	16m	.40	20M	0	7	PN16eo	DL16cr
35	DM8613N	4	1	PPS	30M	BTX	380m	0.0	5.0	.80	2.0	33n	16m	.40	20M	0	7	PN16eo	DL16bh
36	DM8613W	4	1	PPS	30M	BTX	380m	0.0	5.0	.80	2.0	33n	16m	.40	20M	0	7	PN16eo	FL39
37	DM9300N	4	1	PPS	30M	BTX	430m	0.0	5.0	.80	2.0	30n	16m	.40		5	C	PN16ff	DL16bh
38	DM74195J	4	1	PPS	30M	BTX	195m	0.0	5.0	.80	2.0	30n	16m	.40		0	7	74-195	DL16cr
39	DM74195W	4	1	PPS	30M	BTX	195m	0.0	5.0	.80	2.0	30n	16m	.40		0	7	74-195	FL39
40	FLJ561-74195	4	1	PPS	30M	BTX	330m	0.0	5.0	.80	2.0	30n	16m	.40		0	7	74-195	DLØ
41	FLJ565-84195	4	1	PPS	30M	BTX	330m	0.0	5.0	.80	2.0	30n	16m	.40		2	8	74-195	DLØ
42	ITT74LS175	4	1	PPS	30M	BTX	90m	0.0	5.0	.80	2.0	35n	4.0m	.40		0	7	74-175N	DLØ
43	MC54195L	4	1	PPS	30M	BTX	195m†	0.0	5.0	.40%	2.4	30n	16m	.40		5	C	74-195	DL16cn
44	MC74195L	4	1	PPS	30M	BTX	195m†	0.0	5.0	.40%	2.4	30n	16m	.40		0	7	74-195	DL16cn
45	MC74195P	4	1	PPS	30M	BTX	195m†	0.0	5.0	.40%	2.4	30n	16m	.40		0	7	74-195	DL16ew
46	MIC54195J	4	1	PPS	30M	BTX	315m♦	0.0	5.0	.80	2.0	30n	16m	.40		5	C	74-195	DL16fg
47	MIC64195J	4	1	PPS	30M	BTX	315m♦	0.0	5.0	.80	2.0	30n	16m	.40		4	8	74-195	TO116
48	MIC74195J	4	1	PPS	30M	BTX	315m♦	0.0	5.0	.80	2.0	30n	16m	.40		0	7	74-195	DL16fg
49	MIC74195N	4	1	PPS	30M	BTX	315m♦	0.0	5.0	.80	2.0	30n	16m	.40		0	7	74-195	DL16fo
50	N74195R	4	1	PPS	30M	BTX	195m†	0.0	5.0	.80	2.0	30n	16m	.40		0	7	74-195	ML21b
51	N74195W	4	1	PPS	30M	BTX	315m♦	0.0	5.0	.80	2.0	30n	16m	.40		0	7	74-195	FL25
52	RC54LS175B	4	1	PPS	30M	BTX	75m†	0.0	5.0	.80	2.6	23n				5	C	74-175N	DL16fm
53	RC54LS175F	4	1	PPS	30M	BTX	75m†	0.0	5.0	.80	2.6	23n				5	C	74-175N	DL16cu
54	RC54LS175W	4	1	PPS	30M	BTX	75m†	0.0	5.0	.80	2.6	23n				5	C	54-175W	
55	RC54S195J	4	1	PPS	30M	BTX	315m♦	0.0	5.0	.80	2.6	30n	16m	.40		5	C	74-195	DL16fm
56	RC54S195W	4	1	PPS	30M	BTX	315m♦	0.0	5.0	.80	2.0	30n	16m	.40		5	C	54-195W	FL25
57	RC54195B	4	1	PPS	30M	BTX	195m†	0.0	5.0	.80	2.0	30n	16m	.40		5	C	74-195N	DL16fm
58	RC54195F	4	1	PPS	30M	BTX	195m†	0.0	5.0	.80	2.0	30n	16m	.40		5	C	74-195	DL16fi
59	RC54195W	4	1	PPS	30M	BTX	195m†	0.0	5.0	.80	2.0	30n	16m	.40		5	C	54-195W	FL25
60	S54195E	4	1	PPS	30M	BTX	195m†	0.0	5.0	.80	2.0	30n	16m	.40		5	C	74-195	ML61c
61	S54195R	4	1	PPS	30M	BTX	195m†	0.0	5.0	.80	2.0	30n	16m	.40		5	C	74-195	ML21b
62	SN54LS175N	4	1	PPS	30M	BTX	75m	0.0	5.0	.80	2.0	35n	4.0m	.40		5	C	74-175N	DL16ey
63	T9300F	4	1	PPS	30M	BTX	483m	0.0	5.0	.80	2.0	35n	12m	.40		0	7	F249	FL14
64	T9300FM	4	1	PPS	30M	BTX	473m	0.0	5.0	.80	2.0	35n	12m	.40		5	C	F249	FL14
65	T9300J	4	1	PPS	30M	BTX	483m	0.0	5.0	.80	2.0	35n	12m	.40		0	7	F249	DL16fa
66	T9300JM	4	1	PPS	30M	BTX	473m	0.0	5.0	.80	2.0	35n	12m	.40		5	C	F249	DL16fa
67	MC5495F	4	1	PPS	31M	BTX	250m†	0.0	5.0	.40%	2.4	35n	10m	.40		5	C	54-95W	TO86
68	MC5495L	4	1	PPS	31M	BTX	250m†	0.0	5.0	.40%	2.4	35n	10m	.40		5	C	74-95N	DL14q
69	MC7495F	4	1	PPS	31M	BTX	250m†	0.0	5.0	.40%	2.4	35n	10m	.40		0	7	F36	TO86
70	MC7495L	4	1	PPS	31M	BTX	250m†	0.0	5.0	.40%	2.4	35n	10m	.40		0	7	74-95N	DL14q
71	MC7495P	4	1	PPS	31M	BTX	250m†	0.0	5.0	.40%	2.4	35n	10m	.40		0	7	F36	DL14p
72	MIC5495J	4	1	PPS	31M	BTX	200m†	0.0	5.0	.80	2.0	35n	16m	.40		5	C	F70	TO116
73	MIC6495J	4	1	PPS	31M	BTX	200m†	0.0	5.0	.80	2.0	35n	16m	.40		4	8	F70	TO116
74	MIC7495J	4	1	PPS	31M	BTX	200m†	0.0	5.0	.80	2.0	35n	16m	.40		0	7	F70	TO116
75	MIC7495N	4	1	PPS	31M	BTX	200m†	0.0	5.0	.80	2.0	35n	16m	.40		0	7	F70	DL14w
76	25LS194AJC	4	1	PPS	35M	BTD	115m	0.0	5.0	.80	2.0	21n	8.0m	.45		0	7	74-194	DLØ
77	25LS194AJM	4	1	PPS	35M	BTD	115m	0.0	5.0	.70	2.0	21n	8.0m	.45		5	C	74-194	DLØ
78	25LS194AWC	4	1	PPS	35M	BTD	115m	0.0	5.0	.80	2.0	21n	8.0m	.45		0	7	74-194	FL14h
79	25LS194AWM	4	1	PPS	35M	BTD	115m	0.0	5.0	.70	2.0	21n	8.0m	.45		5	C	74-194	FL14h
80	25LS195AJC	4	1	PPS	35M	BTD	105m	0.0	5.0	.80	2.0	21n	8.0m	.45		0	7	74-195	DLØ
81	25LS195AJM	4	1	PPS	35M	BTD	105m	0.0	5.0	.70	2.0	21n	8.0m	.45		5	C	74-195	DLØ
82	25LS195AWC	4	1	PPS	35M	BTD	105m	0.0	5.0	.80	2.0	21n	8.0m	.45		0	7	74-195	FL14h
83	25LS195AWM	4	1	PPS	35M	BTD	105m	0.0	5.0	.70	2.0	21n	8.0m	.45		5	C	74-195	FL14h
84	54LS175J	4	1	PPS	35M	BTD	90m♦	0.0	5.0	.70	2.0	25n	4.0m	.40		5	C	74-175N	DLØ
85	54LS175W	4	1	PPS	35M	BTD	90m♦	0.0	5.0	.70	2.0	25n	4.0m	.40		5	C	74-175N	FL14h
86	74LS175J	4	1	PPS	35M	BTD	90m♦	0.0	5.0	.80	2.0	25n	4.0m	.40		0	7	74-175N	DLØ
87	74LS175W	4	1	PPS	35M	BTD	90m♦	0.0	5.0	.80	2.0	25n	4.0m	.40		0	7	74-175N	FL14h
88	uPB74175C	4	1	PPS	35M	BTX	225m♦	0.0	5.0	.80	2.0	35n	16m	.40		0	7	F406	DL16cw
89	DM54LS95BJ	4	1	PPS	36M	BTD	105m	0.0	5.0	.70	2.0	32n	4.0m	.40		5	C	F402	DL14z
90	DM54LS95BN	4	1	PPS	36M	BTD	105m	0.0	5.0	.70	2.0	32n	4.0m	.40		5	C	F402	DL14m
91	DM54LS95BW	4	1	PPS	36M	BTD	105m	0.0	5.0	.70	2.0	32n	4.0m	.40		5	C	F402	FL41
92	DM74LS95BJ	4	1	PPS	36M	BTD	105m	0.0	5.0	.80	2.0	32n	4.0m	.40		0	7	F402	DL14z
93	DM74LS95BN	4	1	PPS	36M	BTD	105m	0.0	5.0	.80	2.0	32n	4.0m	.40		0	7	F402	DL14m
94	DM74LS95BW	4	1	PPS	36M	BTD	105m	0.0	5.0	.80	2.0	32n	4.0m	.40		0	7	F402	FL41
95	DM5495N	4	1	PPS	36M	BTX	375m	0.0	5.0	.80	2.0	35n	16m	.40		5	C	F155	DL14m
96	DM7495J	4	1	PPS	36M	BTX	375m	0.0	5.0	.80	2.0	35n	16m	.40		0	7	F155	DL14z
97	DM74194J	4	1	PPS	36M	BTX	315m	0.0	5.0	.80	2.0	30n	16m	.40		0	7	F132	DL16cr
98	DM74194W	4	1	PPS	36M	BTX	315m	0.0	5.0	.80	2.0	30n	16m	.40		0	7	F132	FL39
99	FJJ231	4	1	PPS	36M	BTX	195m	0.0	5.0	.80	2.0	32n	16m	.40		0	7	F155	ML71d
100	SN5495J	4	1	PPS	36M	BTX	250m†	0.0	5.0	.80	2.0	32n	16m	.40		5	C	F70	DL14r
101	TL7495AN	4	1	PPS	36M	BTX	330m	0.0	5.0	.80	2.0	32n	16m	.40		0	7	PN14e	ML71a
102	uPB74195C	4	1	PPS	39M	BTX	315m♦	0.0	5.0	.80	2.0	30n	16m	.40		0	7	F421	DLØ
103	DM7542N	4	1	PPS	40M	BTX	600m	0.0	5.0	.80	2.0§	38n	16m	.40		5	C	F316	DL16bh
104	DM8542J	4	1	PPS	40M	BTX	600m	0.0	5.0	.80	2.0§	38n	16m	.40		0	7	F316	DL16cr
105	DM8542W	4	1	PPS	40M	BTX	600m	0.0	5.0	.80	2.0§	38n	16m	.40		0	7	F316	FL39
106	DM54175J	4	1	PPS	40M	BTX	285m	0.0	5.0	.80	2.0	30n	16m	.40	30M	5	C	74-175N	DL16cr
107	DM54175N	4	1	PPS	40M	BTX	285m	0.0	5.0	.80	2.0	30n	16m	.40	30M	5	C	74-175N	DL16bh
108	DM54175W	4	1	PPS	40M	BTX	285m	0.0	5.0	.80	2.0	30n	16m	.40	30M	5	C	74-175N	FL39
109	DM74175J	4	1	PPS	40M	BTX	285m	0.0	5.0	.80	2.0	30n	16m	.40	30M	0	7	74-175N	DL16cr
110	DM74175N	4	1	PPS	40M	BTX	285m	0.0	5.0	.80	2.0	30n	16m	.40	30M	5	C	74-175N	DL16bh

SYMBOLS AND CODES EXPLAINED IN INTERPRETER

7. SHIFT REGISTERS

IN ORDER OF(1)No.BITS/REG(2)No.REGISTERS (3)OP.CODE(4)MAX W/C FREQ(5)STRUCT(6)TYPE No

LINE No.	6 TYPE NUMBER	ORGANIZATION 1 BITS PER REGISTER	ORGANIZATION 2 NO REGS	3 OPER. CODE	4 MAX. WORST CASE FREQ. (Hz)	5 STRU-CTURE CODE	MAX. OPER. POWER DISS. (W)	RATED POWER SUPP. SPAN NEG. (V)	RATED POWER SUPP. SPAN POS. (V)	INPUT LOGIC LEVELS MAX. '0' (V)	INPUT LOGIC LEVELS MIN. '1' (V)	MAX. PROP. DELAY (S)	MIN. OUTPUT SINK CURRENT (A)	MIN. OUTPUT SINK CURRENT @ OUT (V)	MIN. CLOCK FREQ. (Hz)	OPER TEMP RNGE CODE -	OPER TEMP RNGE CODE +	DRAWINGS FUNCTIONAL EQUIVALENT NUMBER	DRAWINGS OUTLINE
1	DM74175W	4	1	PPS	40M	BTX	285m	0.0	5.0	.80	2.0	30n	16m	.40	30M	0	7	74-175N	FL39
2	uPB226C	4	1	PPS	40M	BTX	280m	0.0	5.0	.80	2.0	7.0n	16m	.40		1	7	PN14x	DLØ
3	uPB226D	4	1	PPS	40M	BTX	280m	0.0	5.0	.80	2.0	7.0n	16m	.40		2	7	PN14x	DLØ
4	uPB2195D	4	1	PPS	40M	BTX	400m	0.0	5.0	.80	2.0					2	7	PN16cz	DL16cw
5	FJB93H00	4	1	PPS	55M	BTX	350m†	0.0	5.0	.80	2.0	21n	12m	.40		0	7	74-195	ML4e
6	FJB93H72	4	1	PPS	60M	BTX	475m†	0.0	5.0	.80	2.0	21n	16m	.40		0	7	F141	ML4e
7	N82S71B	4	1	PPS	60M	BTX	473m	0.0	5.0	.50%	2.7	20n	20m	.50		5	C	74-179N	DL16fm
8	5AR175	4	1	PPS	70M	BTX	225m	0.0	5.0	.40	2.5	24n				5	C	74-175N	
9	7AR175	4	1	PPS	70M	BTX	225m	0.0	5.0	.40	2.5	24n				0	7	74-175N	
10	RC54S194J	4	1	PPS	70M	BTX	572m	0.0	5.0	.80	2.6	18n	20m	.50		5	C	74-194N	DL16fm
11	RC54S194W	4	1	PPS	70M	BTX	572m	0.0	5.0	.80	2.6	18n	20m	.50		5	C	54-194W	FL25
12	T54S194F	4	1	PPS	75M	BTD	450m†	0.0	5.0	.80	2.0	10n	20m	.50		5	C	74-194	FL14
13	T54S194J	4	1	PPS	75M	BTD	450m†	0.0	5.0	.80	2.0	10n	20m	.50		5	C	74-194	ML2j
14	T54S195F	4	1	PPS	75M	BTD	545m	0.0	5.0	.80	2.0	9.0n	20m	.50		5	C	F246	FL14
15	T54S195J	4	1	PPS	75M	BTD	545m	0.0	5.0	.80	2.0	9.0n	20m	.50		5	C	F246	ML2j
16	T74S194F	4	1	PPS	75M	BTD	450m†	0.0	5.0	.80	2.0	10n	20m	.50		0	7	74-194	FL14
17	T74S194J	4	1	PPS	75M	BTD	450m†	0.0	5.0	.80	2.0	10n	20m	.50		0	7	74-194	ML2j
18	T74S195F	4	1	PPS	75M	BTD	600m	0.0	5.0	.80	2.0	9.0n	20m	.50		0	7	F246	FL14
19	T74S195J	4	1	PPS	75M	BTD	600m	0.0	5.0	.80	2.0	9.0n	20m	.50		0	7	F246	ML2j
20	S54S194F	4	1	PPS	105M	BTD		0.0	5.0	0.8	2.0	14n	20m#	0.5		5	C	54-194	DL16fs
21	T54S175F	4	1	PPS	110M	BTD		0.0	5.0	.80	2.0	13n	20m	.50	75M	5	C	74-175N	FL14g
22	T54S175J	4	1	PPS	110M	BTD		0.0	5.0	.80	2.0	13n	20m	.50	75M	5	C	74-175N	DL14an
23	T74S175F	4	1	PPS	110M	BTD		0.0	5.0	.80	2.0	13n	20m	.50	75M	0	7	74-175N	FL14g
24	T74S175J	4	1	PPS	110M	BTD		0.0	5.0	.80	2.0	13n	20m	.50	75M	0	7	74-175N	ML48c
25	MB10141	4	1	PPS	150M	BEX	425m†	5.2	0.0	-1.6%	-.96	2.9n				3	8	F174	DL16au
26	MB10141M	4	1	PPS	150M	BEX	425m†	5.2	0.0	-1.6%	-.96	2.9n				3	8	F174	ML221
27	SN10141J	4	1	PPS	150M	BEX	546m	5.2	0.0	-1.6	-.98	4.0n				0	8	F308	DL16fa
28	SN10141N	4	1	PPS	150M	BEX	546m	5.2	0.0	-1.6	-.98	4.0n				0	8	F308	DL16cj
29	uPB2175D	4	1	PSS		BTX	150mØ	0.0	5.0	.80	2.0	10n				2	7	PN16df	DL16cw
30	MC794P	4	1	PSS	1.0M	BRX	225m†	0.0	11	.57	.79	55n				1	5	F39	DL14p
31	HD2533	4	1	PSS	10M	BTX	304m	0.0	5.0	.80	2.0	40n	16m	.40		2	7	F92	ML108
32	HD2533P	4	1	PSS	10M	BTX	304m	0.0	5.0	.80	2.0	40n	16m	.40		2	7	F92	DL16cg
33	MC5494L	4	1	PSS	10M	BTX	175m†	0.0	5.0	.04%	2.4	40n	16m	.40		5	C	74-94N	DL16cn
34	MC7494L	4	1	PSS	10M	BTX	175m†	0.0	5.0	.04%	2.4	40n	16m	.40		0	7	74-94N	DL16cn
35	MC7494P	4	1	PSS	10M	BTX	175m†	0.0	5.0	.04%	2.4	40n	16m	.40		0	7	F110	DL16ew
36	MC8394L	4	1	PSS	10M	BTX	175m†	0.0	5.0	.40%	2.4	40n	16m	.40		0	7	F110	DL16cn
37	MC8394P	4	1	PSS	10M	BTX	175m†	0.0	5.0	.40%	2.4	40n	16m	.40		0	7	F110	DL16ew
38	MC9394L	4	1	PSS	10M	BTX	175m†	0.0	5.0	.40%	2.4	40n	16m	.40		5	C	F110	DL16cn
39	MIC5494J	4	1	PSS	10M	BTX	175m†	0.0	5.0	.80	2.0	40n	16m	.40		5	C	F92	DL16fg
40	MIC6494J	4	1	PSS	10M	BTX	175m†	0.0	5.0	.80	2.0	40n	16m	.40		4	8	F92	DL16fg
41	MIC7494J	4	1	PSS	10M	BTX	175m†	0.0	5.0	.80	2.0	40n	16m	.40		0	7	F92	DL16fg
42	MIC7494N	4	1	PSS	10M	BTX	175m†	0.0	5.0	.80	2.0	40n	16m	.40		0	7	F92	DL16fo
43	SN5494N	4	1	PSS	10M	BTX	175m†	0.0	5.0	.80	2.0	40n	16m	.40		5	C	F92	DL16ey
44	SN7494W	4	1	PSS	10M	BTX	175m†	0.0	5.0	.80	2.0	40n	16m	.40		0	7	F92	MO004AG
45	SW5494J	4	1	PSS	10M	BTX	250m	0.0	5.0	.80	2.0	40n	16m	.40		5	C	F92	DL24bu
46	SW7494J	4	1	PSS	10M	BTX	290m	0.0	5.0	.80	2.0	40n	16m	.40		0	7	F92	DL24bu
47	SW7494N	4	1	PSS	10M	BTX	290m	0.0	5.0	.80	2.0	40n	16m	.40		0	7	F92	DL16ey
48	TSR2511F	4	1	PSS	25M	BTX	200m†	0.0	5.0	.45%	3.2	30n	20m	.45		5	C	F55	FL11a
49	TSR2511J	4	1	PSS	25M	BTX	200m†	0.0	5.0	.45%	3.2	30n	20m	.45		5	C	F55	TO116
50	TSR2512F	4	1	PSS	25M	BTX	200m†	0.0	5.0	.45%	3.2	30n	20m	.45		0	7	F55	FL11a
51	TSR2512J	4	1	PSS	25M	BTX	200m†	0.0	5.0	.45%	3.2	30n	20m	.45		0	7	F55	TO116
52	TSR2513F	4	1	PSS	25M	BTX	200m†	0.0	5.0	.45%	3.2	30n	10m	.45		5	C	F55	FL11a
53	TSR2513J	4	1	PSS	25M	BTX	200m†	0.0	5.0	.45%	3.2	30n	10m	.45		5	C	F55	TO116
54	TSR2514F	4	1	PSS	25M	BTX	200m†	0.0	5.0	.45%	3.2	30n	10m	.45		0	7	F55	FL11a
55	RC5494B	4	1	PSS	100M	BTX	250m♦	0.0	5.0	.80	2.0	40n	16m	.40		5	C	74-94	
56	RC5494F	4	1	PSS	100M	BTX	250m♦	0.0	5.0	.80	2.0	40n	16m	.40		5	C	74-94N	
57	RC5494W	4	1	PSS	100M	BTX	250m♦	0.0	5.0	.80	2.0	40n	16m	.40		5	C	54-94W	FL25
58	MC1694L	4	1	SPS	325M	BEX	750m†	5.2	0.0	-1.6%	-.96	3.7n	40mØ			0	7	F173	DL16eq
59	MC1695L	4	1	SPS	325M	BEX	750m†	5.2	0.0	-1.6	-.96					0	7	F173	DL16bp
60	US5494A	4	1	SSS	10M	BTX	250m	0.0	5.0	.80	2.0	40n	1.6m	.40		5	C	F92	DL16ba
61	US7494A	4	1	SSS	10M	BTX	250m	0.0	5.0	.80	2.0	40n	1.6m	.40		0	7	F92	DL16ba
62	HD2534	4	1	SSS	20M	BTX	330m	0.0	5.0	.80	2.0	35n	16m	.40		2	7	F155	ML100
63	HD2534P	4	1	SSS	20M	BTX	330m	0.0	5.0	.80	2.0	35n	16m	.40		2	7	F155	ML64c
64	FJJ321	4	1	SSS	25M	BTX	300m	0.0	5.0	.80	2.0	35n	9.6m	.40		0	7		
65	RH803	4	2	PPS	500k	BDX	2.2	0.0	15	1.0†	15					0	7	F263	
66	MSR8	4	2	PPS	5.0M	Ø	360m	0.0	5.0	.40	3.0					0	7	F341	
67	527	4	2	PPS	5.0M	BDX	350m†	0.0	5.0	.45	2.0	60n				0	7		
68	D4016	4	2	PPS	5.0M	BDX	1.8	0.0	5.0	.95	2.0	170n				0	7	F215	PL7
69	ISR0212	4	2	PPS	5.0M	BDX	855m	0.0	5.0	.95	2.0	90n				0	7	F212	PL6
70	ISR2212	4	2	PPS	5.0M	BDX	855m	0.0	5.0	.95	2.0	90n				0	7	F212	PL6
71	ISR2276	4	2	PPS	5.0M	BDX	425m	0.0	5.0	.95	2.0	90n				0	7	F214	PL6
72	RD803	4	2	PPS	5.0M	BDX	500m	0.0	5.0	.30†	5.0					0	7	F263	
73	FT19	4	2	PPS	10M		2.7	0.0	8.0	0.0†	4.0	60n	15m%					X103	CYØ
74	RT801	4	2	PPS	10M	BTX	540m	0.0	5.0	.30	3.3					0	7	F266	
75	527T	4	2	PPS	20M	BTX	390m†	0.0	5.0	.45	5.0	34n				0	7		
76	5527	4	2	PPS	20M	BTX	700m†	0.0	5.0	.45	2.4	26n	14m	.40		0	7		
77	TMSR8A	4	2	PPS	25M	BTX	500m	0.0	5.0	.22†	3.3	35n				0	7	F342a	
78	RH804	4	2	SPS	500k	BDX	2.1	0.0	15	1.0†	15					0	7	F264	
79	SIL4015BE	4	2	SPS	1.0M	MCA	200mØ	0.0	5.0	.01%	4.95	700n	360u$	4.6		4	8	40-15B	MO001AG
80	CM4015	4	2	SPS	1.0M	MCX	100u♦	0.0	10	10†	0.0	250n				5	C	40-15B	MO001AC
81	SIL4015BD	4	2	SPS	2.0M	MCA	200mØ	0.0	5.0	.01%	4.95	500n	300u$	4.6		5	C	40-15B	MO001AG
82	SIL4015BF	4	2	SPS	2.0M	MCA	200mØ	0.0	5.0	.01%	4.95	500n	300u$	4.6		5	C	40-15B	MO001AC
83	SS4015AE	4	2	SPS	2.5M			0.0	10	.20%	9.8	300n	2.8m	1.5		2	8	40-15B	
84	CD4015AY	4	2	SPS	2.5M	MCX	14m♦	0.0	10	.05%	9.95	300n	80u	9.5		4	8	40-15B	MO001AC
85	HD1-4015A9	4	2	SPS	2.5M	MCX	1.0m♦	0.0	10	.01%	9.99	300n	100u	.50		4	8	40-15B	ML127h
86	HD9-4015A9	4	2	SPS	2.5M	MCX	1.0m♦	0.0	10	.01%	9.99	300n	100u	.50		4	8	40-15B	FL27
87	MB84015M	4	2	SPS	2.5M	MCX	200m	0.0	10	3.0Ø	7.0	300n				4	8	40-15B	ML221
88	SCL4015BD	4	2	SPS	3.0M	MCA	300u♦	0.0	15	4.0	11	200n	3.4mØ	1.5		5	C	40-15B	MO001AE
89	SCL4015BE	4	2	SPS	3.0M	MCA	300u♦	0.0	15	4.0	11	200n	3.0mØ	1.5		4	8	40-15B	DL16cy
90	SCL4015BF	4	2	SPS	3.0M	MCA	300u♦	0.0	15	4.0	11	200n	3.4mØ	1.5		5	C	40-15B	MO004AH
91	HD1-4015A2	4	2	SPS	3.0M	MCX	100u♦	0.0	10	.01%	9.99	225n	250u	.50		5	C	40-15B	ML127h
92	HD9-4015A2	4	2	SPS	3.0M	MCX	100u♦	0.0	10	.01%	9.99	225n	250u	.50		5	C	40-15B	FL27
93	MB84015	4	2	SPS	3.0M	MCX	200m	0.0	10	3.0Ø	7.0	200n				5	C	40-15B	DL16au
94	MC14015AL	4	2	SPS	3.0M	MCX	100u♦Ø	0.0	10	.01%	9.99	225n	900uØ	.50		5	C	F111	DL16bp
95	MC14015L	4	2	SPS	3.0M	MCX	100u♦	0.0	10	.01%	9.99	250n				5	C	F111	DL16bp
96	RD804	4	2	SPS	5.0M	BDX	575m	0.0	5.0	.30†	5.0					0	7	F264	
97	MSM4015	4	2	SPS	5.0M	MCX	200mØ	0.0	10	2.0	7.2	1.0u	3.0m	.50		2	7	40-15B	DL16fo
98	SCL4015AC	4	2	SPS	5.0M	MCX	300mØ	0.0	10	.05%	9.95	225n	350u%	9.5		5	C	F154	DL16as
99	SCL4015AD	4	2	SPS	5.0M	MCX	300mØ	0.0	10	.05%	9.95	225n	350u%	9.5		5	C	F154	DL16aw
100	SCL4015AE	4	2	SPS	5.0M	MCX	300mØ	0.0	10	.05%	9.95	225n	350u%	9.5		4	8	F154	DL16bv
101	SCL4015AF	4	2	SPS	5.0M	MCX	300mØ	0.0	10	.05%	9.95	225n	350u%	9.5		5	C	F154	FL23
102	SCL4015AH	4	2	SPS	5.0M	MCX	300mØ	0.0	10	.05%	9.95	225n	350u%	9.5		5	C	F154	CHØ
103	uPD4015C	4	2	SPS	5.0M	MCX	200mØØ	0.0	10	.30	.70	300n	80u	.50		4	8	40-15B	MO001AC
104	CD4015D	4	2	SPS	6.0M	MCX	100u♦Ø	0.0	14	.01%	9.99	100n	100u%	9.5		5	C	40-15B	MO001AE
105	MC14015CL	4	2	SPS	6.0M	MCX	1.0m♦Ø	0.0	10	.01%	9.99	300n	500uØ	.50		4	8	F111	DL16bp
106	MC14015CP	4	2	SPS	6.0M	MCX	1.0m♦Ø	0.0	10	.01%	9.99	300n	500uØ	.50		4	8	F111	DL16ew
107	CD4015CJ	4	2	SPS	9.0M	MCX	14m♦	0.0	10	.05%	9.95	300n	80u%	9.5		4	8	40-15B	DL16cr
108	CD4015CN	4	2	SPS	9.0M	MCX	14m♦	0.0	10	.05%	9.95	300n	80u%	9.5		4	8	40-15B	DL16bh
109	CD4015MD	4	2	SPS	9.0M	MCX	6.0m♦	0.0	10	.05%	9.95	225n	140u%	9.5		5	C	40-15B	DL16bg
110	CD4015MF	4	2	SPS	9.0M	MCX	6.0m♦	0.0	10	.05%	9.95	225n	140u%	9.5		5	C	40-15B	FL37

SYMBOLS AND CODES EXPLAINED IN INTERPRETER

7. SHIFT REGISTERS

IN ORDER OF(1)No.BITS/REG(2)No.REGISTERS (3)OP.CODE(4)MAX W/C FREQ(5)STRUCT(6)TYPE No

LINE No.	6 TYPE NUMBER	ORGANIZATION 1 BITS PER REGISTER	ORGANIZATION 2 NO REGS	3 OPER. CODE	4 MAX. WORST CASE FREQ. (Hz)	5 STRU-CTURE CODE	MAX. OPER. POWER DISS. (W)	RATED POWER SUPP. SPAN NEG. (V)	RATED POWER SUPP. SPAN POS. (V)	INPUT LOGIC LEVELS MAX. '0' (V)	INPUT LOGIC LEVELS MIN. '1' (V)	MAX. PROP. DELAY (S)	MIN. OUTPUT SINK CURRENT (A)	MIN. OUTPUT SINK CURRENT @ OUT (V)	MIN. CLOCK FREQ. (Hz)	OPER TEMP RNGE CODE -	OPER TEMP RNGE CODE +	DRAWINGS FUNCTIONAL EQUIVALENT NUMBER	DRAWINGS OUTLINE
1	CD4015MJ	4	2	SPS	9.0M	MCX	6.0m♦	0.0	10	.05%	9.95	225n	140u%	9.5		5	C	40-15B	DL16cr
2	RT802	4	2	SPS	10M	BTX	600m	0.0	5.0	.30	3.3					0	7	F267	
3	CD4015BK	4	2	SPS	16M	MCX	500mØ	0.0	15	4.0	11	80n	6.8m†	1.5		5	C	F505	MO004AG
4	569T	4	4	PPS			1.1 †	0.0	5.0	.45	2.0	25n	16m			0	6	F277	PL8
5	CD40105AD	4	16	PPD	6.0M	MCX	500mØ	0.0	10	0.0†	10§	45n	150nΔ			5	C	F373	MO001AE
6	CD40105AE	4	16	PPD	6.0M	MCX	500mØ	0.0	10	0.0†	10§	45n	150nΔ			4	8	F373	MO001AC
7	CD40105AF	4	16	PPD	6.0M	MCX	500mØ	0.0	10	0.0†	10§	45n	150nΔ			5	C	F373	MO001AC
8	CD40105AH	4	16	PPD	6.0M	MCX	500mØ	0.0	10	0.0†	10§	45n	150nΔ			5	C	F373	CHØ
9	CD40105AK	4	16	PPD	6.0M	MCX	500mØ	0.0	10	0.0†	10§	45n	150nΔ			5	C	F373	MO004AG
10	CD40105AY	4	16	PPD	6.0M	MCX	500mØ	0.0	10	0.0†	10§	45n	150nΔ			4	8	F373	MO001AE
11	S67401J16	4	64	SSS	5.0M			0.0	5.0	.80	2.0	75n	8.0m	.50		0	7	F209	DL16bi
12	S67401N16	4	64	SSS	5.0M			0.0	5.0	.80	2.0	75n	8.0m	.50		0	7	F209	DL16dj
13	MSM543	5	1	PPS	2.0M	MCX	2.5m♦	0.0	5.0	.80	3.6	1.0u	1.6m†	.40		3	8	F395	DL16fc
14	DM54LS96J	5	1	PPS	10M	BTD	100m	0.0	5.0	.70	2.0	55n	4.0m	.40		5	C	F40	DL16cr
15	DM54LS96N	5	1	PPS	10M	BTD	100m	0.0	5.0	.70	2.0	55n	4.0m	.40		5	C	F40	DL16bh
16	DM54LS96W	5	1	PPS	10M	BTD	100m	0.0	5.0	.70	2.0	55n	4.0m	.40		5	C	F40	FL39
17	DM74LS96J	5	1	PPS	10M	BTD	100m	0.0	5.0	.80	2.0	55n	4.0m	.40		0	7	F40	DL16cr
18	DM74LS96N	5	1	PPS	10M	BTD	100m	0.0	5.0	.80	2.0	55n	4.0m	.40		0	7	F40	DL16bh
19	DM74LS96W	5	1	PPS	10M	BTD	100m	0.0	5.0	.80	2.0	55n	4.0m	.40		0	7	F40	FL39
20	FJB9396	5	1	PPS	10M	BTX	395m♦	0.0	5.0	.80	2.0	40n	16m	.40		0	7	F40	ML4e
21	FJJ241	5	1	PPS	10M	BTX	240m†	0.0	5.0	.80	2.0	40n	16m	.40		0	7	F40	ML2h
22	FJJ241A	5	1	PPS	10M	BTX	240m	0.0	5.0	.80	2.0	40n	18m	0.0		0	7	F40	ML67
23	FLJ261-7496	5	1	PPS	10M	BTX	415m	0.0	5.0	.80	2.0	40n	16m	.40		0	7	F468	DLØ
24	FLJ265-8496	5	1	PPS	10M	BTX	415m	0.0	5.0	.80	2.0	40n	16m	.40		2	8	F468	DLØ
25	GFB7496	5	1	PPS	10M	BTX	240m†	0.0	5.0	.80	2.0	40n	16m	.40		0	7	F40	ML127g
26	MB453	5	1	PPS*	10M	BTX	280m†	0.0	5.0	.80	2.0	55n				0	7	F390	DL16au
27	MB453M	5	1	PPS*	10M	BTX	280m†	0.0	5.0	.80	2.0	55n				0	7	F390	ML221
28	MC5496L	5	1	PPS	10M	BTX	240m†	0.0	5.0	.40%	2.4	40n	16m	.40		5	C	74-96N	DL16cn
29	MC7496P	5	1	PPS	10M	BTX	240m†	0.0	5.0	.40%	2.4	40n	16m	.40		0	7	F40	DL16ew
30	MC8396L	5	1	PPS	10M	BTX	240m†	0.0	5.0	.40%	2.4	40n	16m	.40		0	7	F40	DL16cn
31	MC8396P	5	1	PPS	10M	BTX	240m†	0.0	5.0	.40%	2.4	40n	16m	.40		0	7	F40	DL16ew
32	MC9396L	5	1	PPS	10M	BTX	240m†	0.0	5.0	.40%	2.4	40n	16m	.40		5	C	F40	DL16cn
33	MIC5496J	5	1	PPS	10M	BTX	215m†	0.0	5.0	.80	2.0	40n	16m	.40		5	C	F40	DL16fg
34	MIC6496J	5	1	PPS	10M	BTX	215m†	0.0	5.0	.80	2.0	40n	16m	.40		4	8	F40	DL16fg
35	MIC7496J	5	1	PPS	10M	BTX	215m†	0.0	5.0	.80	2.0	40n	16m	.40		0	7	F40	DL16fg
36	MIC7496N	5	1	PPS	10M	BTX	215m†	0.0	5.0	.80	2.0	40n	16m	.40		0	7	F40	DL16fo
37	N7496R	5	1	PPS	10M	BTX	400m	0.0	5.0	.80	2.0	40n	16m	.40		0	7	F40	ML21b
38	RC5496B	5	1	PPS	10M	BTX	340m♦	0.0	5.0	.80	2.0	40n	16m	.40		5	C	74-96N	DL16fm
39	RC5496F	5	1	PPS	10M	BTX	340m♦	0.0	5.0	.80	2.0	40n	16m	.40		5	C	74-96N	DL16fi
40	RC5496W	5	1	PPS	10M	BTX	340m♦	0.0	5.0	.80	2.0	40n	16m	.40		5	C	54-96W	FL25
41	S5496E	5	1	PPS	10M	BTX	340m	0.0	5.0	.80	2.0	40n	16m	.40		5	C	F40	ML61c
42	S5496R	5	1	PPS	10M	BTX	340m	0.0	5.0	.80	2.0	40n	16m	.40		5	C	F40	ML21b
43	SW5496J	5	1	PPS	10M	BTX	340m	0.0	5.0	.80	2.0	40n	1.6m	.40		5	C	F40	DL16ey
44	SW7496J	5	1	PPS	10M	BTX	395m	0.0	5.0	.80	2.0	40n	1.6m	.40		0	7	F40	DL16ey
45	SW7496N	5	1	PPS	10M	BTX	395m	0.0	5.0	.80	2.0	40n	1.6m	.40		0	7	F40	DL24bu
46	TL7496N	5	1	PPS	10M	BTX	414m	0.0	5.0	.80	2.0	55n	16m	.40		0	7	F243a	ML48b
47	US5496A	5	1	PPS	10M	BTX	240m†	0.0	5.0	.80	2.0	55n	1.6m	.40		5	C	F40	DL16ba
48	US7496A	5	1	PPS	10M	BTX	240m†	0.0	5.0	.80	2.0	55n	1.6m	.40		0	7	F40	DL16ba
49	FJJ241-7496	5	1	SSS	10M	BTX	240m	0.0	5.0	.80	2.0	40n	16m	.40		0	7	F145	ML2d
50	RC8200N	5	2	PPS	15M	BTX	580m	0.0	5.0	.40%	2.6	45n	9.6m	.40		5		F302	DL24ar
51	RC8200Q	5	2	PPS	15M	BTX	580m	0.0	5.0	.40%	2.6	45n	9.6m	.40		5		F302	FL3b
52	RC8201F	5	2	PPS	15M	BTX	580m	0.0	5.0	.40%	2.6	45n	9.6m	.40		5		F302a	DL24cb
53	RC8201N	5	2	PPS	15M	BTX	580m	0.0	5.0	.40%	2.6	45n	9.6m	.40		5		F302a	DL24ar
54	RC8201Q	5	2	PPS	15M	BTX	580m	0.0	5.0	.40%	2.6	45n	9.6m	.40		5		F302a	FL3b
55	RCP8200F	5	2	PPS	15M	BTX	580m	0.0	5.0	.40%	2.6	45n	9.6m	.40		0	7	F302	DL24cb
56	HD2546	5	2	PPS	35M	BTX	414m	0.0	5.0	.80	2.0	40n	16m	.40		2	7	F40	ML108
57	HD2546P	5	2	PPS	35M	BTX	414m	0.0	5.0	.80	2.0	40n	16m	.40		2	7	F40	DL16cg
58	MC14006CL	5	4	PPS	4.0M	MCX	100u♦Ø	0.0	10	.01%	9.99	250n	500uØ	.50		4	8	40-06	DL14q
59	MC14006CP	5	4	PPS	4.0M	MCX	100u♦Ø	0.0	10	.01%	9.99	250n	500uØ	.50		4	8	40-06	DL14aq
60	MC14006AL	5	4	PPS	7.0M	MCX	10u♦Ø	0.0	10	.01%	9.99	145n	900uØ	.50		5	C	40-06	DL14q
61	CM4006	5	4	SPS	2.0M	MCX	100n♦	6.0	15	.01	9.9	350n				5	C	F126	MO001AC
62	CD4006	5	4	SSS	2.0M	MCX	10u♦Ø	0.0	10	.01Ø	9.99	450n	500u%			5	C	F126	FL6
63	CD4006AY	5	4	SSS	2.0M	MCX	400u♦	0.0	10	.05%	9.95	250n	80u	9.5		4	8	F126	MO001AB
64	CD4006D	5	4	SSS	2.0M	MCX	10u♦Ø	0.0	10	.01Ø	9.99	450n	500u%			5	C	F126	ML16a
65	CD4006AY#	5	4	SSS	2.5M	MCX	600u♦	0.0	10	.05%	9.95	200n	140u%	9.5		4	8	F126	MO001ab
66	SCL4006ABC	5	4	SSS	3.0M	MCA	300u♦	0.0	15	4.0	11	240n	1.1mØ	1.5		5	C	F540	MO001AA
67	HD1-4006A2	5	4	SSS	5.0M	MCX	200mØ	0.0	10	.01%	9.99	200n	250u	.50		5	C	F126	DLØ
68	HD1-4006A9	5	4	SSS	5.0M	MCX	200mØ	0.0	10	.01%	9.99	250n	125u	.50		4	8	F126	DLØ
69	MM4606AD	5	4	SSS	5.0M	MCX	150u♦	0.0	5.0	.05%	9.95	400n				5	C	F312	ML179
70	MM4606AF	5	4	SSS	5.0M	MCX	150u♦	0.0	5.0	.05%	9.95	400n				5	C	F312	FL36
71	MM5606AN	5	4	SSS	5.0M	MCX	350u♦	0.0	5.0	.05%	9.95	500n				4	8	F312	DL14m
72	SCL4006AC	5	4	SSS	6.0M	MCX	300mØ	0.0	10	.05%	9.95	200n	140u%	9.5		5	C	F126	ML64e
73	SCL4006AD	5	4	SSS	6.0M	MCX	300mØ	0.0	10	.05%	9.95	200n	140u%	9.5		5	C	F126	ML104
74	SCL4006AE	5	4	SSS	6.0M	MCX	300mØ	0.0	10	.05%	9.95	200n	140u%	9.5		4	8	F126	ML93a
75	SCL4006AF	5	4	SSS	6.0M	MCX	300mØ	0.0	10	.05%	9.95	200n	140u%	9.5		5	C	F126	FL11a
76	SCL4006AH	5	4	SSS	6.0M	MCX	300mØ	0.0	10	.05%	9.95	200n	140u%	9.5		5	C	F126	CHØ
77	CD4006CJ	5	4	SSS	10M	MCX	1.4m♦	0.0	10	.05%	9.95	250n	80u%	9.5		4	8	F126	DL14z
78	CD4006CN	5	4	SSS	10M	MCX	1.4m♦	0.0	10	.05%	9.95	250n	80u%	9.5		4	8	F126	DL14m
79	CD4006MD	5	4	SSS	10M	MCX	600u♦	0.0	10	.05%	9.95	200n	140u%	9.5		5	C	F126	ML179
80	CD4006MF	5	4	SSS	10M	MCX	600u♦	0.0	10	.05%	9.95	200n	140u%	9.5		5	C	F126	FL36
81	CD4006MJ	5	4	SSS	10M	MCX	600u♦	0.0	10	.05%	9.95	200n	140u%	9.5		5	C	F126	DL14z
82	CD4006BK	5	4	SSS	16M	MCX	500mØ	0.0	15	4.0	11	80n	6.8m†	1.5		5	C	F503	MO004AF
83	MUF5	6	1		2.0M		375m	0.0	5.0	0.0	5.0	40n				0	7	F380	PL10
84	511	6	1		5.0M	BDX	52m	0.0	7.0	.45	2.0	60n				0	7		PL11
85	M207	6	1		10M	BTX	240m			.40	2.0	35n				0	7		PLØ
86	M206	6	1		15M	BTX	255m			.40	2.4	30n				0	7		
87	511T	6	1		20M	BTX	60m	0.0	7.0	.45	2.0	34n				0	7		PL11
88	513T	6	1		25M	BTX	258m	0.0	7.0	.45	2.0	40n				0	7		PL11
89	FLJ361-74118	6	1	PPS		BTX	300m	0.0	5.0	.80	2.0	29n	16m	.40		0	7	F368	DL16ap
90	FLJ365-84118	6	1	PPS		BTX	300m	0.0	5.0	.80	2.0	29n	16m	.40		2	8	F368	DL16ap
91	FLJ371-74119	6	1	PPS		BTX	300m	0.0	5.0	.80	2.0	29n	16m	.40		0	7	F369	DL24ak
92	FLJ375-84119	6	1	PPS		BTX	300m	0.0	5.0	.80	2.0	29n	16m	.40		2	8	F369	DL24ak
93	FLJ531-74174	6	1	PPS		BTX	177m	0.0	5.0	.80	2.0	15n	16m	.40		0	7	74-174N	DL16ap
94	FLJ535-84174	6	1	PPS		BTX	177m	0.0	5.0	.80	2.0	15n	16m	.40		2	8	74-174N	DL16ap
95	MIC54174J	6	1	PPS		BTX	225m♦	0.0	5.0	.80	2.0	17n				5	C	74-174N	DL16fa
96	MIC64118J	6	1	PPS		BTX	150m	0.0	5.0	.80	2.0	29n				4	8	F368	DL16fa
97	MIC64174J	6	1	PPS		BTX	225m♦	0.0	5.0	.80	2.0	17n				4	8	74-174N	DL16fa
98	MIC74174J	6	1	PPS		BTX	225m♦	0.0	5.0	.80	2.0	17n				0	7	74-174N	DL16fa
99	MIC74174N	6	1	PPS		BTX	225m♦	0.0	5.0	.80	2.0	17n				0	7	74-174N	DL16fa
100	TL74118N	6	1	PPS		BTX	315m†	0.0	5.0	.80	2.0	29n				0	7	F368	ML71a
101	TL74119N	6	1	PPS		BTX	315m†	0.0	5.0	.80	2.0	29n				0	7	F369	ML48b
102	uPD122C	6	1	PPS	150k	MXX		24	0.0	-9.3*	-3.7	4.0u	80u	-13		2	7	F418	MO001AA
103	IFR0211	6	1	PPS	5.0M	BDX	625m	0.0	5.0	.95	2.0	30n				0	7	F211	PL6
104	IFR2211	6	1	PPS	5.0M	BDX	625m	0.0	5.0	.95	2.0	30n				0	7	F211	PL6
105	MM54C174D	6	1	PPS	5.0M	MCX	500mØ	0.0	10	2.0	8.0	110n	8.0mØ	10		5	C	74-174N	DL16bg
106	MM54C174F	6	1	PPS	5.0M	MCX	500mØ	0.0	10	2.0	8.0	110n	8.0mØ	10		5	C	74-174N	FL37
107	MM54C174J	6	1	PPS	5.0M	MCX	500mØ	0.0	10	2.0	8.0	110n	8.0mØ	10		5	C	74-174N	DL16cr
108	MM74C174J	6	1	PPS	5.0M	MCX	500mØ	0.0	10	2.0	8.0	110n	8.0mØ	10		4	8	74-174N	DL16cr
109	MM74C174N	6	1	PPS	5.0M	MCX	500mØ	0.0	10	2.0	8.0	110n	8.0mØ	10		4	8	74-174N	DL16bh
110	CD40174BCJ	6	1	PPS	6.0M	MCX	240u♦	0.0	15	4.0	11	120n	8.0m	1.5		4	8	F517	DL16cr

SYMBOLS AND CODES EXPLAINED IN INTERPRETER

7. SHIFT REGISTERS

IN ORDER OF(1)No.BITS/REG(2)No.REGISTERS (3)OP.CODE(4)MAX W/C FREQ(5)STRUCT(6)TYPE No

LINE No.	6 TYPE NUMBER	ORGANIZATION 1 BITS PER REGISTER	ORGANIZATION 2 NO REGS	3 OPER. CODE	4 MAX. WORST CASE FREQ. (Hz)	5 STRU-CTURE CODE	MAX. OPER. POWER DISS. (W)	RATED POWER SUPP. SPAN NEG. (V)	RATED POWER SUPP. SPAN POS. (V)	INPUT LOGIC LEVELS MAX. '0' (V)	INPUT LOGIC LEVELS MIN. '1' (V)	MAX. PROP. DELAY (S)	MIN. OUTPUT SINK CURRENT (A)	MIN. OUTPUT SINK CURRENT @ OUT (V)	MIN. CLOCK FREQ. (Hz)	OPER TEMP RNGE CODE -	OPER TEMP RNGE CODE +	DRAWINGS FUNCTIONAL EQUIVALENT NUMBER	DRAWINGS OUTLINE
1	CD40174BCN	6	1	PPS	6.0M	MCX	240u♦	0.0	15	4.0	11	120n	8.0m	1.5		4	8	F517	DL16bh
2	CD40174BMJ	6	1	PPS	6.0M	MCX	60u♦	0.0	15	4.0	11	120n	3.4m	1.5		5	C	F517	DL16cr
3	CD40174BMW	6	1	PPS	6.0M	MCX	60u♦	0.0	15	4.0	11	120n	3.4m	1.5		5	C	F517	FL37a
4	HD1-54C174	6	1	PPS	12M	MCX	500m	0.0	10	2.0	8.0	110n	10u	1.0	5.0M	5	C	74-174N	ML127h
5	HD1-74C174	6	1	PPS	12M	MCX	500m	0.0	10	2.0	8.0	110n	10u	1.0	5.0M	0	7	74-174N	ML127h
6	HD9-54C174	6	1	PPS	12M	MCX	500m	0.0	10	2.0	8.0	110n	10u	1.0	5.0M	5	C	74-174N	FL14f
7	HD9-74C174	6	1	PPS	12M	MCX	500m	0.0	10	2.0	8.0	110n	10u	1.0	5.0M	0	7	74-174N	FL14f
8	CD40174BD	6	1	PPS	15M	MCX	500mØ	0.0	15	4.0	11	60n	6.8m†	1.5		5	C	F513	MO001AE
9	CD40174BE	6	1	PPS	15M	MCX	500mØ	0.0	15	4.0	11	60n	6.8m†	1.5		4	8	F513	MO001AC
10	CD40174BF	6	1	PPS	15M	MCX	500mØ	0.0	15	4.0	11	60n	6.8m†	1.5		5	C	F513	MO001AC
11	CD40174BK	6	1	PPS	15M	MCX	500mØ	0.0	15	4.0	11	60n	6.8m†	1.5		5	C	F513	MO004AG
12	SFC4174E	6	1	PPS	25M	BTX	225m	0.0	5.0	.80	2.0	35n				0	7	74-174N	DL16ey
13	SFC4174EM	6	1	PPS	25M	BTX	225m	0.0	5.0	.80	2.0	35n				5	C	74-174N	DL16ey
14	SFC4174ET	6	1	PPS	25M	BTX	225m	0.0	5.0	.80	2.0	35n				2	8	74-174N	DL16ey
15	SN54174N	6	1	PPS	25M	BTX	325m	0.0	5.0	.80	2.0	35n	16m	.40		5	C	74-174N	DL16ey
16	SN74174W	6	1	PPS	25M	BTX	325m	0.0	5.0	.80	2.0	35n	16m	.40		0	7	74-174N	MO004AG
17	SN74LS174W	6	1	PPS	30M	BTD	130m	0.0	5.0	.80	2.0	28n	8.0m	.50		0	7	74-174N	FL34
18	SN74LS378W	6	1	PPS	30M	BTD	135m	0.0	5.0	.80	2.0	27n	4.0m	.40		0	7	F451	FL63
19	ITT74LS174	6	1	PPS	30M	BTX	130m	0.0	5.0	.80	2.0	35n	4.0m	.40		0	7	74-174N	DLØ
20	RC54LS174B	6	1	PPS	30M	BTX	110m†	0.0	5.0	.80	2.6	23n				5	C	74-174N	FL63
21	RC54LS174F	6	1	PPS	30M	BTX	110m†	0.0	5.0	.80	2.6	23n				5	C	74-174N	DL16fm
22	RC54LS174W	6	1	PPS	30M	BTX	110m†	0.0	5.0	.80	2.6	23n				5	C	54-174W	DL16cv
23	SN54LS174N	6	1	PPS	30M	BTX	110m	0.0	5.0	.80	2.0	35n	4.0m	.40		5	C	74-174N	DL16ey
24	54LS174J	6	1	PPS	35M	BTD	130m♦	0.0	5.0	.70	2.0	25n	4.0m	.40		5	C	74-174N	DLØ
25	54LS174W	6	1	PPS	35M	BTD	130m♦	0.0	5.0	.70	2.0	25n	4.0m	.40		5	C	74-174N	FL14h
26	74LS174J	6	1	PPS	35M	BTD	130m♦	0.0	5.0	.80	2.0	25n	4.0m	.40		0	7	74-174N	DLØ
27	74LS174W	6	1	PPS	35M	BTD	130m♦	0.0	5.0	.80	2.0	25n	4.0m	.40		0	7	74-174N	FL14h
28	DM54174J	6	1	PPS	40M	BTX	285m	0.0	5.0	.80	2.0	30n	16m	.40	30M	5	C	74-174N	DL16cr
29	DM54174N	6	1	PPS	40M	BTX	285m	0.0	5.0	.80	2.0	30n	16m	.40	30M	5	C	74-174N	DL16bh
30	DM54174W	6	1	PPS	40M	BTX	285m	0.0	5.0	.80	2.0	30n	16m	.40	30M	5	C	74-174N	FL39
31	DM74174J	6	1	PPS	40M	BTX	285m	0.0	5.0	.80	2.0	30n	16m	.40	30M	0	7	74-174N	DL16cr
32	DM74174N	6	1	PPS	40M	BTX	285m	0.0	5.0	.80	2.0	30n	16m	.40	30M	0	7	74-174N	DL16bh
33	DM74174W	6	1	PPS	40M	BTX	285m	0.0	5.0	.80	2.0	30n	16m	.40	30M	0	7	74-174N	FL39
34	5AR174	6	1	PPS	70M	BTX	325m	0.0	5.0	.40	2.5	24n				5	C	74-174N	
35	7AR174	6	1	PPS	70M	BTX	325m	0.0	5.0	.40	2.5	24n				0	7	74-174N	
36	S54S174F	6	1	PPS	110M	BTD		0.0	5.0	0.8	2.0	15n	20m#	0.5		5	C	74-174	DL16fs
37	T54S174F	6	1	PPS	110M	BTD		0.0	5.0	.80	2.0	13n	20m	.50	75M	5	C	74-174N	FL14g
38	T54S174J	6	1	PPS	110M	BTD		0.0	5.0	.80	2.0	13n	20m	.50	75M	5	C	74-174N	DL14an
39	T74S174F	6	1	PPS	110M	BTD		0.0	5.0	.80	2.0	13n	20m	.50	75M	0	7	74-174N	FL14g
40	T74S174J	6	1	PPS	110M	BTD		0.0	5.0	.80	2.0	13n	20m	.50	75M	0	7	74-174N	DL14an
41	uPB10176D	6	1	PPS	150M		550mØ	0.0	5.0	-1.8*	-.80	2.0n						F417	DL16cw
42	MC10176L	6	1	PPS	150M	BEX	460m†	5.0	0.0	-1.4	-1.1	4.5n				3	8	F349	DL24fj
43	MC10176P	6	1	PPS	150M	BEX	460m†	5.0	0.0	-1.4	-1.1	4.5n				3	8	F349	DL16ew
44	MC10186L	6	1	PPS	150M	BEX	460m†	5.0	0.0	-1.6%	-.96	2.5n				3	8	F378	DL24fj
45	TMS3026JC	6	1	SPS	250k	MPT		24	0.0	-3.0	-10	4.0u	2.0m	4.0		2	8	F96	ML43a
46	RH806	6	1	SPS	500k	BDX	2.3	0.0	15	1.0†	15					0	7	F265	
47	RD806	6	1	SPS	5.0M	BDX	850m	0.0	5.0	.30†	5.0					0	7	F265	
48	DM85S50J	6	1	SPS	75M	BTD	750m	0.0	5.0	.80	2.0	20n	20m	.50		0	7	F446	DL16cr
49	DM85S50N	6	1	SPS	75M	BTD	750m	0.0	5.0	.80	2.0	20n	20m	.50		0	7	F446	DL16bh
50	DM85S50W	6	1	SPS	75M	BTD	750m	0.0	5.0	.80	2.0	20n	20m	.50		0	7	F446	FL39
51	MGF8	8	1		2.0M		500m	0.0	5.0	0.0	5.0	25n				0	7	F383	PL10
52	I106	8	1		5.0M	BDX	600m	4.8	5.2	0.0	5.0	50n				0	7		PLØ
53	I107	8	1		5.0M	BDX	600m	4.8	5.2	0.0	5.0	50n				0	7		PLØ
54	M203	8	1		20M	BTX	175m	0.0	5.0	.40	2.4	30n				0	7		
55	TL74100N	8	1	PPS		BTX	556m†	0.0	5.0	.80	2.0	30n				0	7	F375	DL24bu
56	MM74C374J	8	1	PPS		MCX	500mØ	0.0	10	2.0	8.0§		1.6m†			4	8	F520	DLØ
57	MM74C374N	8	1	PPS		MCX	500mØ	0.0	10	2.0	8.0§		1.6m†			4	8	F520	DL20r
58	67S376N	8	1	PPS	75m	BTD	700m	0.0	5.0	.80	2.0§	10n	20m	.50		0	7	F531	DLØ
59	S1694	8	1	PPS	100k	MXX		7.7	0.0	-4.0	-1.2					0	7	F45	ML45
60	SCL5408D	8	1	PPS	2.0M	MCX	200mØ	0.0	10	.05%	9.95	1.0u				5	C	F161	DL24ca
61	SCL5408F	8	1	PPS	2.0M	MCX	200mØ	0.0	10	.05%	9.95	1.0u				5	C	F161	FL16a
62	SCL5408H	8	1	PPS	2.0M	MCX	200mØ	0.0	10	.05%	9.95	1.0u							CHØ
63	MC14034AL	8	1	PPS	2.5M	MCX	25u♦	0.0	5.0	.050%	4.95	940n	280u	.40		5	C	F241	ML95a
64	MC14034CL	8	1	PPS	2.5M	MCX	250u♦	0.0	5.0	.050%	4.95	1.2u	160u	.40		4	8	F241	ML95a
65	SCL4034BD	8	1	PPS	3.0M	MCA	300u♦	0.0	15	4.0	11	400n	1.1mØ	1.5		5	C	40-34B	DL24bs
66	SCL4034BE	8	1	PPS	3.0M	MCA	300u♦	0.0	15	4.0	11	400n	1.1mØ	1.5		4	8	40-34B	DL24ek
67	SCL4034BH	8	1	PPS	3.0M	MCA	300u♦	0.0	15	4.0	11	400n	1.1mØ	1.5		5	C	40-34B	CHØ
68	CD4034AK	8	1	PPS	3.0M	MCX	6.0m♦	0.0	10	.05%	9.95	480n	175u	.50		5	C	40-34B	MO015AG
69	CD4058AD	8	1	PPS	5.0M	MCX	200mØ	0.0	10	.01%	9.99	240n				5	C	F232	DL24p
70	CD4058AK	8	1	PPS	5.0M	MCX	200mØ	0.0	10	.01%	9.99	240n				5	C	F232	FL28
71	MSM4034	8	1	PPS	5.0M	MCX	200mØ	0.0	10	2.0	7.2	1.0u	3.0m	.50		2	7	F522	DL24z
72	SCL4034AH	8	1	PPS	5.0M	MCX	6.0m♦	0.0	10	.05%	9.95	480n	88u%	9.5		5	C	40-34	CHØ
73	SCL4034D	8	1	PPS	5.0M	MCX	6.0m♦	0.0	10	.05	9.95	480n	88u%	9.5		5	C	40-34	DL24ca
74	SCL4035ABC	8	1	PPS	5.0M	MCX	6.0m♦	0.0	10	.05%	9.95	480n	88u%	9.5		5	C	40-34	DL24ai
75	SCL4035ABE	8	1	PPS	5.0M	MCX	6.0m♦	0.0	10	.05%	9.95	480n	88u%	9.5		4	8	40-34	DL24ca
76	CD4034BK	8	1	PPS	6.0M	MCX	500mØ	0.0	15	4.0	11	140n	6.8m†	1.5		5	C	F508	FL28
77	CD4034BCJ	8	1	PPS	7.0M	MCX	1.2m♦	0.0	15	4.0	11§	190n	3.0m	1.5		4	8	F423	ML183a
78	CD4034BCN	8	1	PPS	7.0M	MCX	1.2m♦	0.0	15	4.0	11§	190n	3.0m	1.5		4	8	F423	DL24au
79	CD4034BMJ	8	1	PPS	7.0M	MCX	300u♦	0.0	15	4.0	11§	190n	3.4m	1.5		5	C	F423	ML183a
80	CD4034BMW	8	1	PPS	7.0M	MCX	300u♦	0.0	15	4.0	11§	190n	3.4m	1.5		5	C	F423	FL42
81	DM8546J	8	1	PPS	15M	BTX	625m	0.0	5.0	.80	2.0§	40n	16m	.40		0	7	F447	DL16cr
82	DM8546W	8	1	PPS	15M	BTX	625m	0.0	5.0	.80	2.0§	40n	16m	.40		0	7	F447	FL39
83	uPB2091D	8	1	PPS	18M	BTX	175m	0.0	5.0	.80	2.0					2	7	F404	DL14ab
84	N74165R	8	1	PPS	20M	BTX	210m†	0.0	5.0	.80	2.0	40n	16m	.40		0	7	F107	ML21b
85	RC54165B	8	1	PPS	20M	BTX	210m†	0.0	5.0	.80	2.0	40n	16m	.40		5	C	74-165N	DL16fm
86	RC54165F	8	1	PPS	20M	BTX	315m♦	0.0	5.0	.80	2.0	40n	16m	.40		5	C	74-165N	DL16fi
87	RC54165W	8	1	PPS	20M	BTX	315m♦	0.0	5.0	.80	2.0	40n	16m	.40		5	C	54-165W	FL25
88	S54165E	8	1	PPS	20M	BTX	210m†	0.0	5.0	.80	2.0	40n	16m	.40		5	C	F107	ML61c
89	S54165R	8	1	PPS	20M	BTX	210m†	0.0	5.0	.80	2.0	40n	16m	.40		5	C	F107	ML21b
90	FLJ311-74198	8	1	PPS	25M	BTX	610m	0.0	5.0	.80	2.0	35n	16m	.40		0	7	F89	DLØ
91	FLJ315-84198	8	1	PPS	25M	BTX	610m	0.0	5.0	.80	2.0	35n	16m	.40		2	8	F89	DLØ
92	FLJ321-74199	8	1	PPS	25M	BTX	610m	0.0	5.0	.80	2.0	35n	16m	.40		0	7	F90	DLØ
93	FLJ325-84199	8	1	PPS	25M	BTX	610m	0.0	5.0	.80	2.0	35n	16m	.40		2	8	F90	DLØ
94	FLJ461-74166	8	1	PPS	25M	BTX	610m	0.0	5.0	.80	2.0	35n	16m	.40		0	7	F88	DLØ
95	FLJ465-84166	8	1	PPS	25M	BTX	610m	0.0	5.0	.80	2.0	35n	16m	.40		2	8	F88	DLØ
96	MB455	8	1	PPS	25M	BTX	360m†	0.0	5.0	.80	2.0	35n				0	7	F89	DL24df
97	MB455M	8	1	PPS	25M	BTX	360m†	0.0	5.0	.80	2.0	35n				0	7	F89	DL24cj
98	N74164Q	8	1	PPS	25M	BTX	21m%†	0.0	5.0	.80	2.0	42n	8.0m	.40		0	7	74-164	FL19
99	N74166R	8	1	PPS	25M	BTX	360m†	0.0	5.0	.80	2.0	35n	16m	.40		0	7	F88	ML21b
100	N74199P	8	1	PPS	25M	BTX	360m†	0.0	5.0	.80	2.0	35n	16m	.40		0	7	F90	FL3b
101	N74199Y	8	1	PPS	25M	BTX	360m†	0.0	5.0	.80	2.0	35n	16m	.40		0	7	F90	FL18
102	RC54166B	8	1	PPS	25M	BTX	360m†	0.0	5.0	.80	2.0	35n	16m	.40		5	C	74-166N	DL16fm
103	RC54166F	8	1	PPS	25M	BTX	520m♦	0.0	5.0	.80	2.0	35n	16m	.40		5	C	74-166N	DL16cu
104	RC54166W	8	1	PPS	25M	BTX	520m♦	0.0	5.0	.80	2.0	35n	16m	.40		5	C	54-166W	FL25
105	RC54198F	8	1	PPS	25M	BTX	520m♦	0.0	5.0	.80	2.0	35n	16m	.40		5	C	74-198N	DL24cb
106	RC54198N	8	1	PPS	25M	BTX	520m♦	0.0	5.0	.80	2.0	35n	16m	.40		5	C	74-198N	DL24ar
107	RC54198Q	8	1	PPS	25M	BTX	520m♦	0.0	5.0	.80	2.0	35n	16m	.40		5	C	54-198W	FL3b
108	RC54199F	8	1	PPS	25M	BTX	520m♦	0.0	5.0	.80	2.0	35n	16m	.40		5	C	74-199N	DL24cb
109	RC54199N	8	1	PPS	25M	BTX	520m♦	0.0	5.0	.80	2.0	35n	16m	.40		5	C	74-199N	DL24ar
110	RC54199Q	8	1	PPS	25M	BTX	520m♦	0.0	5.0	.80	2.0	35n	16m	.40		5	C	54-199W	FL3b

SYMBOLS AND CODES EXPLAINED IN INTERPRETER

7. SHIFT REGISTERS

IN ORDER OF(1)No.BITS/REG(2)No.REGISTERS (3)OP.CODE(4)MAX W/C FREQ(5)STRUCT(6)TYPE No

LINE No.	6 TYPE NUMBER	ORGANIZATION 1 BITS PER REGISTER	ORGANIZATION 2 NO REGS	3 OPER. CODE	4 MAX. WORST CASE FREQ. (Hz)	5 STRU-CTURE CODE	MAX. OPER. POWER DISS. (W)	RATED POWER SUPP. SPAN NEG. (V)	RATED POWER SUPP. SPAN POS. (V)	INPUT LOGIC LEVELS MAX. '0' (V)	INPUT LOGIC LEVELS MIN. '1' (V)	MAX. PROP. DELAY (S)	MIN. OUTPUT SINK CURRENT (A)	MIN. OUTPUT SINK CURRENT @ OUT (V)	MIN. CLOCK FREQ. (Hz)	OPER TEMP RNGE CODE -	OPER TEMP RNGE CODE +	DRAWINGS FUNCTIONAL EQUIVALENT NUMBER	DRAWINGS OUTLINE
1	S54164Q	8	1	PPS	25M	BTX	21m%†	0.0	5.0	.80	2.0	42n	8.0m	.40		5	C	74-164	FL19
2	S54166E	8	1	PPS	25M	BTX	360m†	0.0	5.0	.80	2.0	35n	16m	.40		5	C	F88	ML61c
3	S54166R	8	1	PPS	25M	BTX	360m†	0.0	5.0	.80	2.0	35n	16m	.40		5	C	F88	ML21b
4	S54198P	8	1	PPS	25M	BTX	360m†	0.0	5.0	.80	2.0	35n	16m	.40		5	C	F89	FL3b
5	S54198Y	8	1	PPS	25M	BTX	360m†	0.0	5.0	.80	2.0	35n	16m	.40		5	C	F89	FL18
6	S54199P	8	1	PPS	25M	BTX	360m†	0.0	5.0	.80	2.0	35n	16m	.40		5	C	F90	FL3b
7	S54199Y	8	1	PPS	25M	BTX	360m†	0.0	5.0	.80	2.0	35n	16m	.40		5	C	F90	FL18
8	SN54198N	8	1	PPS	25M	BTX	360m†	0.0	5.0	.80	2.0	30n	16m	.40		5	C	F89	DL24bu
9	SN54199N	8	1	PPS	25M	BTX	360m†	0.0	5.0	.80	2.0	30n	16m	.40		5	C	F90	DL24bu
10	SN74198W	8	1	PPS	25M	BTX	360m†	0.0	5.0	.80	2.0	30n	16m	.40		0	7	F89	MO019AA
11	SN74199W	8	1	PPS	25M	BTX	360m†	0.0	5.0	.80	2.0	30n	16m	.40		0	7	F90	MO019AA
12	SW54166J	8	1	PPS	25M	BTX	360m†	0.0	5.0	.80	2.0	35n				5	C	F88	DL16ey
13	SW54198N	8	1	PPS	25M	BTX	360m†	0.0	5.0	.80	2.0	35n				5	C	F89	DL24bu
14	SW54199N	8	1	PPS	25M	BTX	360m†	0.0	5.0	.80	2.0	35n				5	C	F90	DL24bu
15	SW74198N	8	1	PPS	25M	BTX	360m†	0.0	5.0	.80	2.0	30n	16m	.40		0	7	F89	DL24bu
16	SW74199N	8	1	PPS	25M	BTX	360m†	0.0	5.0	.80	2.0	30n	16m	.40		0	7	F90	DL24bu
17	TL74165N	8	1	PPS	26M	BTX	330m	0.0	5.0	.80	2.0	40n	16m	.40		0	7	F107	ML48b
18	SN74LS273W	8	1	PPS	30M	BTD	140m	0.0	5.0	.80	2.0	28n	4.0m	.40		0	7	F449	FL64
19	SN74LS377W	8	1	PPS	30M	BTD	140m	0.0	5.0	.80	2.0	27n	4.0m	.40		0	7	F450	FL64
20	uPB2198D	8	1	PPS	30M	BTX	360m	0.0	5.0	.80	2.0					2	7	PN24gb	DL24bh
21	57LS376J	8	1	PPS	35M	BTD	200m	0.0	5.0	.80	2.0§	10n	12m	.50		5	C	F531	DLØ
22	67LS376J	8	1	PPS	35M	BTD	200m	0.0	5.0	.80	2.0§	10n	24m	.50		0	7	F531	DLØ
23	67LS376N	8	1	PPS	35M	BTD	200m	0.0	5.0	.80	2.0§	10n	24m	.50		0	7	F531	DLØ
24	SN54LS574J	8	1	PPS	35M	BTD	225m	0.0	5.0	.70	2.0§		12m	.40		5	C	F430a	DL20k
25	SN54LS574W	8	1	PPS	35M	BTD	225m	0.0	5.0	.70	2.0§		12m	.40		5	C	F430a	FL64
26	SN74LS299W	8	1	PPS	35M	BTD	300m	0.0	5.0	.80	2.0	35n	24m	.50		0	7	74S299N	FL64
27	SN74LS322W	8	1	PPS	35M	BTD		0.0	5.0	.80	2.0§					0	7	54LS322	FL64
28	SN74LS323W	8	1	PPS	35M	BTD		0.0	5.0	.80	2.0§	25n				0	7	54LS323	FL64
29	SN74LS374W	8	1	PPS	35M	BTD	225m	0.0	5.0	.80	2.0§	34n	24m	.50		0	7	F359	FL64
30	SN74LS574J	8	1	PPS	35M	BTD	225m	0.0	5.0	.80	2.0§		24m	.50		0	7	F430a	DL20k
31	SN74LS574N	8	1	PPS	35M	BTD	225m	0.0	5.0	.80	2.0§		24m	.50		0	7	F430a	DL20j
32	SN74LS574W	8	1	PPS	35M	BTD	225m	0.0	5.0	.80	2.0§		24m	.50		0	7	F430a	FL64
33	DM54198F	8	1	PPS	35M	BTX	580m	0.0	5.0	.80	2.0	35n	16m	.40		5	C	F89	FL42
34	DM54198N	8	1	PPS	35M	BTX	520m	0.0	5.0	.80	2.0	35n	16m	.40		5	C	F89	DL24au
35	DM54199F	8	1	PPS	35M	BTX	580m	0.0	5.0	.80	2.0	35n	16m	.40		5	C	F90	FL42
36	DM54199N	8	1	PPS	35M	BTX	520m	0.0	5.0	.80	2.0	35n	16m	.40		5	C	F90	DL24au
37	DM74198F	8	1	PPS	35M	BTX	580m	0.0	5.0	.80	2.0	35n	16m	.40		0	7	F89	FL42
38	DM74198J	8	1	PPS	35M	BTX	580m	0.0	5.0	.80	2.0	35n	16m	.40		0	7	F89	DL24cc
39	DM74199F	8	1	PPS	35M	BTX	580m	0.0	5.0	.80	2.0	35n	16m	.40		0	7	F90	FL42
40	DM74199J	8	1	PPS	35M	BTX	580m	0.0	5.0	.80	2.0	35n	16m	.40		0	7	F90	DL24cc
41	FJB93198	8	1	PPS	35M	BTX	360m†	0.0	5.0	.80	2.0	35n	16m	.40		0	7	F89	ML118a
42	TL74166N	8	1	PPS	35M	BTX	609m	0.0	5.0	.80	2.0	35n	16m	.40		0	7	F88	ML48b
43	TL74198N	8	1	PPS	35M	BTX	609m	0.0	5.0	.80	2.0	35n	16m	.40		0	7	F89	DL24cb
44	TL74199N	8	1	PPS	35M	BTX	609m	0.0	5.0	.80	2.0	35n	16m	.40		0	7	F90	DL24cb
45	uPB74198C	8	1	PPS	35M	BTX	360m†	0.0	5.0	.80	2.0		16m	.40		0	7	F89	DL24cd
46	TL74164N	8	1	PPS	36M	BTX	283m	0.0	5.0	.80	2.0	42n	8.0m	.40		0	7	74-164	ML71a
47	TL84164N	8	1	PPS	36M	BTX	283m	0.0	5.0	.80	2.0	42n	8.0m	.40		2	8	74-164	ML71a
48	57S374J	8	1	PPS	75M	BTD	700m	0.0	5.0	.80	2.0§	10n	32m	.50		5	C	F450	DLØ
49	57S376J	8	1	PPS	75M	BTD	700m	0.0	5.0	.80	2.0§	10n	20m	.50		5	C	F531	DLØ
50	57S378J	8	1	PPS	75M	BTD	700m	0.0	5.0	.80	2.0§	10n	32m	.50		5	C	F531	DLØ
51	67S374J	8	1	PPS	75M	BTD	700m	0.0	5.0	.80	2.0§	10n	32m	.50		0	7	F450	DLØ
52	67S374N	8	1	PPS	75M	BTD	700m	0.0	5.0	.80	2.0§	10n	32m	.50		0	7	F450	DLØ
53	67S376J	8	1	PPS	75M	BTD	700m	0.0	5.0	.80	2.0§	10n	20m	.50		0	7	F531	DLØ
54	67S378J	8	1	PPS	75M	BTD	700m	0.0	5.0	.80	2.0§	10n	32m	.50		0	7	F531	DLØ
55	67S378N	8	1	PPS	75M	BTD	700m	0.0	5.0	.80	2.0§	10n	32m	.50		0	7	F531	DLØ
56	S54S373F	8	1	PPS	75M	BTD		0.0	5.0	0.8	2.0§	10n	20m#	0.5		5	C	74LS363N	DL20o
57	S54S374F	8	1	PPS	75M	BTD		0.0	5.0	0.8	2.0§	8.0n	20m#	0.5		5	C	74LS364N	DL20o
58	SN54S374J#	8	1	PPS	75M	BTX	700m	0.0	5.0	.80	2.0§	18n	20m	.50		5	C	F450	DL22aa
59	SN74S374JΔ	8	1	PPS	75M	BTX	700m	0.0	5.0	.80	2.0§	18n	20m	.50		0	7	F450	DL20t
60	SN74S374NΔ	8	1	PPS	75M	BTX	700m	0.0	5.0	.80	2.0§	18n	20m	.50		0	7	F450	DL20r
61	100141D#ai	8	1	PPS	380M	BEG		4.5	0.0	-1.8*	-.88	1.7n	55mØ			0	8	PN24gd	DL24ev
62	100141F#ai	8	1	PPS	380M	BEG		4.5	0.0	-1.8*	-.88	1.7n	55mØ			0	8	PN24ge	FL92
63	MC14021CL	8	1	PSS	1.0M	MCX	1.2m	0.0	5.0	.01%	4.99	1.0u				4	8	F175	DL16cn
64	MC14021CP	8	1	PSS	1.0M	MCX	1.2m	0.0	5.0	.01%	4.99	1.0u				4	8	F175	DL16ew
65	MEM3008PS	8	1	PSS	1.0M	MPT	43m	27	0.0	-1.0	-11		500u	-1.0		5	8	F23	FL14c
66	MC14021AL	8	1	PSS	1.5M	MCX	1.8m	0.0	5.0	.01%	4.99	750m				5	C	F175	DL16cn
67	MSM542	8	1	PSS	2.0M	MCX	2.5m♦	0.0	5.0	.80	3.6	1.0u	1.6m†	.40		3	8	F394	DL16fc
68	MM409	8	1	PSS	2.0M	MPX	300mØ	16	0.0	-2.5	-7.0		5.0m†	-16		5	C	F64	DLØ
69	MM509	8	1	PSS	2.0M	MPX	300mØ	16	0.0	-2.5	-7.0		5.0m†	-06		0	7	F64	DLØ
70	CD4014AY	8	1	PSS	2.5M	MCX	14m♦	0.0	10	.05%	9.95	300n	80u	9.5		4	8	40-14B	MO001AC
71	CD4021D	8	1	PSS	2.5M	MCX	100u	0.0	10	0.0	9.99	500n	100u	.50		5	C	F149	
72	CM4021	8	1	PSS	2.5M	MCX	100u♦	0.0	10	10†	0.0	250n				5	C	PN16dj	
73	HD1-4014A9	8	1	PSS	2.5M	MCX	1.0m♦	0.0	10	.01%	9.99	300n	100u	.50		4	8	F313	ML127h
74	HD1-4021A9	8	1	PSS	2.5M	MCX	1.0m♦	0.0	10	.01%	9.99	300n	100u	.50		4	8	F149	ML127h
75	HD9-4014A9	8	1	PSS	2.5M	MCX	1.0m♦	0.0	10	.01%	9.99	300n	100u	.50		4	8	F313	FL27
76	HD9-4021A9	8	1	PSS	2.5M	MCX	1.0m♦	0.0	10	.01%	9.99	300n	100u	.50		4	8	F149	FL27
77	MB84021M	8	1	PSS	2.5M	MCX	200m	0.0	10	3.0Ø	7.0	300n				4	8	F175	ML221
78	MM54C165D	8	1	PSS	2.5M	MCX	1.5m	0.0	5.0	1.5	3.5	400n	1.7mØ	5.0		5	C	F311	DL16bg
79	MM54C165F	8	1	PSS	2.5M	MCX	1.5m	0.0	5.0	1.5	3.5	400n	1.7mØ	5.0		5	C	F311	FL37
80	MM54C165J	8	1	PSS	2.5M	MCX	1.5m	0.0	5.0	1.5	3.5		1.7mØ	5.0		5	C	F311	DL16cr
81	MM74C165J	8	1	PSS	2.5M	MCX	1.5m	0.0	5.0	1.5	3.5		1.7mØ	5.0		4	8	F311	DL16cr
82	MM74C165N	8	1	PSS	2.5M	MCX	1.5m	0.0	5.0	1.5	3.5	400n	1.7mØ	5.0		4	8	F311	DL16bh
83	MM4614AD	8	1	PSS	2.5M	MCX	1.5u♦	0.0	5.0	.05%	9.95	750n				5	C	F313	DL16bg
84	MM4614AF	8	1	PSS	2.5M	MCX	1.5u♦	0.0	5.0	.05%	9.95	750n				5	C	F313	FL37
85	MM4621AD	8	1	PSS	2.5M	MCX	1.5u♦	0.0	5.0	.05%	9.95	750n				5	C	F314	DL16bg
86	MM4621AF	8	1	PSS	2.5M	MCX	1.5u♦	0.0	5.0	.05%	9.95	750n				5	C	F314	FL37
87	MM5614AN	8	1	PSS	2.5M	MCX	3.5u♦	0.0	5.0	.05%	9.95	1.0u				4	8	F313	DL16bh
88	MM5621AN	8	1	PSS	2.5M	MCX	3.5u♦	0.0	5.0	.05%	9.95	1.0u				4	8	F314	DL16bh
89	SCL4014BF	8	1	PSS	3.0M	MCA	300u♦	0.0	10	.05%	9.95	300n	900u	.50		5	C	PN16dj	MO004AH
90	HD1-4014A2	8	1	PSS	3.0M	MCX	100u♦	0.0	10	.01%	9.99	225n	250u	.50		5	C	F313	ML127h
91	HD1-4021A2	8	1	PSS	3.0M	MCX	100u♦	0.0	10	.01%	9.99	225n	250u	.50		5	C	F149	ML127h
92	HD9-4014A2	8	1	PSS	3.0M	MCX	100u♦	0.0	10	.01%	9.99	225n	250u	.50		5	C	F313	FL27
93	HD9-4021A2	8	1	PSS	3.0M	MCX	100u♦	0.0	10	.01%	9.99	225n	250u	.50		5	C	F149	FL27
94	MB84021	8	1	PSS	3.0M	MCX	200m	0.0	10	3.0Ø	7.0	225n				5	C	F175	DL16au
95	SCL4014BD	8	1	PSS	4.0M	MCA	300u♦	0.0	15	4.0	11	240n	3.4mØ	1.5		5	C	40-14B	MO001AE
96	SCL4014BE	8	1	PSS	4.0M	MCA	300u♦	0.0	15	4.0	11	240n	3.0mØ	1.5		4	8	40-14B	DL16cy
97	SIL4014BD	8	1	PSS	5.0M	MCA	6.0m♦	0.0	10	.05%	9.95	200n	650u$	9.5		5	C	40-14B	MO001AG
98	SIL4014BE	8	1	PSS	5.0M	MCA	14m♦	0.0	10	.05%	9.95	300n	750u$	9.5		4	8	40-14B	MO001AG
99	SIL4014BF	8	1	PSS	5.0M	MCA	6.0m♦	0.0	10	.05%	9.95	200n	650u$	9.5		5	C	40-14B	MO001AC
100	SIL4021BD	8	1	PSS	5.0M	MCA	6.0m♦	0.0	10	.05%	9.95	200n	650u$	9.5		5	C	F149	MO001AG
101	SIL4021BE	8	1	PSS	5.0M	MCA	14m♦	0.0	10	.05%	9.95	300n	750u$	9.5		4	8	F149	MO001AG
102	SIL4021BF	8	1	PSS	5.0M	MCA	6.0m♦	0.0	10	.05%	9.95	200n	650u$	9.5		5	C	F149	MO001AC
103	CD4014CJ	8	1	PSS	5.0M	MCX	14m♦	0.0	10	.05%	9.95	300n	80u%	9.5		4	8	40-14B	DL16cr
104	CD4014CN	8	1	PSS	5.0M	MCX	14m♦	0.0	10	.05%	9.95	300n	80u%	9.5		4	8	40-14B	DL16bh
105	CD4014D	8	1	PSS	5.0M	MCX	100u♦Ø	0.0	14	.01%	9.99	100n	100u%	9.5		5	C	40-14B	MO001AE
106	CD4014MD	8	1	PSS	5.0M	MCX	6.0m♦	0.0	10	.05%	9.95	225n	140u%	9.5		5	C	40-14B	DL16bg
107	CD4014MF	8	1	PSS	5.0M	MCX	6.0m♦	0.0	10	.05%	9.95	225n	140u%	9.5		5	C	40-14B	FL37
108	CD4014MJ	8	1	PSS	5.0M	MCX	6.0m♦	0.0	10	.05%	9.95	225n	140u%	9.5		5	C	40-14B	DL16cr
109	CD4021CJ	8	1	PSS	5.0M	MCX	14m♦	0.0	10	.05%	9.95	300n	80u%	9.5		4	8	F149	DL16cr
110	CD4021CN	8	1	PSS	5.0M	MCX	14m♦	0.0	10	.05%	9.95	300n	80u%	9.5		4	8	F149	DL16bh

SYMBOLS AND CODES EXPLAINED IN INTERPRETER

7. SHIFT REGISTERS

IN ORDER OF(1)No.BITS/REG(2)No.REGISTERS (3)OP.CODE(4)MAX W/C FREQ(5)STRUCT(6)TYPE No

LINE No.	6 TYPE NUMBER	ORGANIZATION 1 BITS PER REGISTER	2 NO REGS	3 OPER. CODE	4 MAX. WORST CASE FREQ. (Hz)	5 STRU-CTURE CODE	MAX. OPER. POWER DISS. (W)	RATED POWER SUPP. SPAN NEG. (V)	POS. (V)	INPUT LOGIC LEVELS MAX. '0' (V)	MIN. '1' (V)	MAX. PROP. DELAY (S)	MIN. OUTPUT SINK CURRENT (A)	@ OUT (V)	MIN. CLOCK FREQ. (Hz)	OPER TEMP RNGE CODE -	+	DRAWINGS FUNCTIONAL EQUIVALENT NUMBER	OUTLINE
1	CD4021MD	8	1	PSS	5.0M	MCX	6.0m♦	0.0	10	.05%	9.95	225n	140u%	9.5		5	C	F149	DL16bg
2	CD4021MF	8	1	PSS	5.0M	MCX	6.0m♦	0.0	10	.05%	9.95	225n	140u%	9.5		5	C	F149	FL37
3	CD4021MJ	8	1	PSS	5.0M	MCX	6.0m♦	0.0	10	.05%	9.95	225n	140u%	9.5		5	C	F149	DL16cr
4	HD1-54C165	8	1	PSS	5.0M	MCX	500m∅	0.0	10	2.0	8.0	200n	8.0m	10		5	C	F311	ML127h
5	HD1-74C165	8	1	PSS	5.0M	MCX	500m∅	0.0	10	2.0	8.0	200n	8.0m	10		4	8	74-165N	ML127h
6	HD9-54C165	8	1	PSS	5.0M	MCX	500m∅	0.0	10	2.0	8.0	200n	8.0m	10		5	C	F311	FL27
7	HD9-74C165	8	1	PSS	5.0M	MCX	500m∅	0.0	10	2.0	8.0	200n	8.0m	10		4	8	F311	FL27
8	SCL4014AC	8	1	PSS	5.0M	MCX	300m∅	0.0	10	.05%	9.95	225n	140u%	9.5		5	C	PN16dj	DL16as
9	SCL4014AD	8	1	PSS	5.0M	MCX	300m∅	0.0	10	.05%	9.95	225n	140u%	9.5		5	C	PN16dj	DL16aw
10	SCL4014AE	8	1	PSS	5.0M	MCX	300m∅	0.0	10	.05%	9.95	225n	140u%	9.5		4	8	PN16dj	DL16bv
11	SCL4014AF	8	1	PSS	5.0M	MCX	300m∅	0.0	10	.05%	9.95	225n	140u%	9.5		5	C	PN16dj	FL23
12	SCL4014AH	8	1	PSS	5.0M	MCX	300m∅	0.0	10	.05%	9.95	225n	140u%	9.5		5	C	PN16dj	CH∅
13	SCL4021AC	8	1	PSS	5.0M	MCX	6.0m♦	0.0	10	.05%	9.95	225n	140u%	9.5		5	C	PN16dj	DL16as
14	SCL4021AD	8	1	PSS	5.0M	MCX	6.0m♦	0.0	10	.05%	9.95	225n	140u%	9.5		5	C	PN16dj	DL16aw
15	SCL4021AE	8	1	PSS	5.0M	MCX	6.0m♦	0.0	10	.05%	9.95	225n	140u%	9.5		4	8	PN16dj	DL16bv
16	SCL4021AF	8	1	PSS	5.0M	MCX	6.0m♦	0.0	10	.05%	9.95	225n	140u%	9.5		5	C	PN16dj	FL23
17	SCL4021AH	8	1	PSS	5.0M	MCX	6.0m♦	0.0	10	.05%	9.95	225n	140u%	9.5		5	C	PN16dj	CH∅
18	SCL4021BD	8	1	PSS	6.0M	MCA	300u♦	0.0	15	4.0	11	160n	3.4mØ	1.5		5	C	40-21B	MO001AE
19	SCL4021BE	8	1	PSS	6.0M	MCA	300u♦	0.0	15	4.0	11	160n	3.0mØ	1.5		4	8	40-21B	DL16cy
20	SCL4021BF	8	1	PSS	6.0M	MCA	300u♦	0.0	15	4.0	11	160n	3.4mØ	1.5		5	C	40-21B	MO004AH
21	DM54L165AF	8	1	PSS	14M	BTX	47m	0.0	5.0	.70	2.0	112n	2.0m	.30		5	C	F346	FL37
22	DM54L165AN	8	1	PSS	14M	BTX	47m	0.0	5.0	.70	2.0	112n	2.0m	.30		5	C	F346	DL16bh
23	DM74L165AF	8	1	PSS	14M	BTX	47m	0.0	5.0	.70	2.0	112n	3.6m	.40		0	7	F346	FL37
24	DM74L165AJ	8	1	PSS	14M	BTX	47m	0.0	5.0	.70	2.0	112n	3.6m	.40		0	7	F346	DL16cr
25	DM76L90N	8	1	PSS	14M	BTX	47m	0.0	5.0	.70	2.0	124n	2.0m	.30		5	C	F445	DL16bh
26	DM86L90J	8	1	PSS	14M	BTX	47m	0.0	5.0	.70	2.0	124n	3.6m	.40		0	7	F445	DL16cr
27	DM86L90W	8	1	PSS	14M	BTX	47m	0.0	5.0	.70	2.0	124n	3.6m	.40		0	7	F445	FL39
28	CD4014BK	8	1	PSS	16M	MCX	500m∅	0.0	15	4.0	11	80n	6.8m†	1.5		5	C	F504	MO004AG
29	CD4021BK	8	1	PSS	16M	MCX	500m∅	0.0	15	4.0	11	80n	6.8m†	1.5		5	C	F506	MO004AG
30	DM7590D	8	1	PSS	20M	BTX	315m†	0.0	5.0	.80	2.0	35n	16m	.40		5	C	F53	ML63
31	DM8590J	8	1	PSS	20M	BTX	315m	0.0	5.0	.80	2.0	60n	16m	.40		0	7	F445	DL16cr
32	DM8590W	8	1	PSS	20M	BTX	315m	0.0	5.0	.80	2.0	60n	16m	.40		0	7	F445	FL39
33	DM74165J	8	1	PSS	20M	BTX	315m	0.0	5.0	.80	2.0	60n	16m	.40		0	7	F346	DL16cr
34	DM74165W	8	1	PSS	20M	BTX	315m	0.0	5.0	.80	2.0	60n	16m	.40		0	7	F346	FL39
35	MC54165F	8	1	PSS	20M	BTX	315m♦	0.0	5.0	.40%	2.4	40n	16m	.40		5	C	54-165W	FL34
36	MC54165L	8	1	PSS	20M	BTX	315m♦	0.0	5.0	.40%	2.4	40n	16m	.40		5	C	74-165N	DL16cn
37	MC74165F	8	1	PSS	20M	BTX	315m♦	0.0	5.0	.40%	2.4	40n	16m	.40		0	7	F261	FL34
38	MC74165L	8	1	PSS	20M	BTX	315m♦	0.0	5.0	.40%	2.4	40n	16m	.40		0	7	74-165N	DL16cn
39	MC74165P	8	1	PSS	20M	BTX	315m♦	0.0	5.0	.40%	2.4	40n	16m	.40		0	7	F261	DL16ew
40	MIC54165J	8	1	PSS	20M	BTX	315m	0.0	5.0	.80	2.0	40n	16m	.40		5	C	F107	TO116
41	MIC64165J	8	1	PSS	20M	BTX	315m	0.0	5.0	.80	2.0	40n	16m	.40		4	8	F107	TO116
42	MIC74165J	8	1	PSS	20M	BTX	315m	0.0	5.0	.80	2.0	40n	16m	.40		0	7	F107	TO116
43	MIC74165N	8	1	PSS	20M	BTX	315m	0.0	5.0	.80	2.0	40n	16m	.40		0	7	F107	DL∅
44	SN54165N	8	1	PSS	20M	BTX	315m	0.0	5.0	.80	2.0	40n	16m	.40		5	C	F107	DL16ey
45	SN74165W	8	1	PSS	20M	BTX	315m	0.0	5.0	.80	2.0	40n	16m	.40		0	7	F107	MO004AG
46	FLJ451-74165	8	1	PSS	25M	BTX	315m	0.0	5.0	.80	2.0	40n	16m	.40		0	7	F107	DL∅
47	FLJ455-84165	8	1	PSS	25M	BTX	315m	0.0	5.0	.80	2.0	40n	16m	.40		2	8	F107	DL∅
48	MIC54166J	8	1	PSS	25M	BTX	360m†	0.0	5.0	.80	2.0	30n	16m	.40		5	C	F88	TO116
49	MIC64166J	8	1	PSS	25M	BTX	360m†	0.0	5.0	.80	2.0	30n	16m	.40		4	8	F88	TO116
50	MIC74166J	8	1	PSS	25M	BTX	360m†	0.0	5.0	.80	2.0	30n	16m	.40		0	7	F88	TO116
51	MIC74166N	8	1	PSS	25M	BTX	360m†	0.0	5.0	.80	2.0	30n	16m	.40		0	7	F88	DL∅
52	SN54166N	8	1	PSS	25M	BTX	360m†	0.0	5.0	.80	2.0	30n	16m	.40		5	C	F88	DL16ey
53	SN74166W	8	1	PSS	25M	BTX	360m†	0.0	5.0	.80	2.0	30n	16m	.40		0	7	F88	MO004AG
54	SW74166J	8	1	PSS	25M	BTX	360m†	0.0	5.0	.80	2.0	30n	16m	.40		0	7	F88	DL16bp
55	SW74166N	8	1	PSS	25M	BTX	360m†	0.0	5.0	.80	2.0	30n	16m	.40		0	7	F88	DL16bp
56	uPD4014C	8	1	PSS	25M	MCX	200m†	0.0	10	3.0	7.0	300n	100u			4	8	PN16fo	MO001AC
57	uPD4021C	8	1	PSS	25M	MCX	200m†	0.0	10	3.0	7.0	300n	100u			4	8	PN16fo	MO001AC
58	FJB93165	8	1	PSS	26M	BTX	210m†	0.0	5.0	.80	2.0	40n	16m	.40		0	7	F107	ML4e
59	SN74LS165W	8	1	PSS	30M	BTD	180m	0.0	5.0	.80	2.0	30n	8.0m	.50		0	7	54-165W	FL34
60	DM74166J	8	1	PSS	35M	BTX	580m	0.0	5.0	.80	2.0	35n	16m	.40		0	7	F88	DL16cr
61	DM74166W	8	1	PSS	35M	BTX	580m	0.0	5.0	.80	2.0	35n	16m	.40		0	7	F88	FL39
62	SN74LS594FN	8	1	SPD		BTD			7.0	0.80	2.0	23n	24m	0.50		0	7	F595a	LL20∅
63	MP218B	8	1	SPS	1.0M	MXX	150m	24	0.0	-3.5	-10	750n				0	7	F83	ML19d
64	MSM541	8	1	SPS	2.0M	MCX	2.5m♦	0.0	5.0	.80	3.6	1.0u	1.6m†	.40		3	8	F393	ML64e
65	MM408	8	1	SPS	2.0M	MPX	300m∅	16	0.0	-2.5	-7.0		5.0m†	-16		5	C	F63	DL∅
66	MM508	8	1	SPS	2.0M	MPX	300m∅	16	0.0	-2.5	-7.0		5.0m†	-16		0	7	F63	DL∅
67	SCL4094BE	8	1	SPS	2.5M	MCA	300u♦	0.0	10	.05%	9.95	250n	1.1m%	.50		4	8	40-94B	DL16cy
68	MM54C164D	8	1	SPS	3.0M	MCX	1.5m	0.0	5.0	1.5♦	3.5	380n	360u	.40		5	C	F310	ML179
69	MM54C164F	8	1	SPS	3.0M	MCX	1.5m	0.0	5.0	1.5	3.5	380n	360u	.40		5	C	F310	FL36
70	MM54C164J	8	1	SPS	3.0M	MCX	1.5m	0.0	5.0	1.5	3.5	380n	360u	.40		5	C	F310	DL14z
71	MM74C164J	8	1	SPS	3.0M	MCX	1.5m	0.0	5.0	1.5	3.5	380n	360u	.40		4	8	F310	DL14z
72	MM74C164N	8	1	SPS	3.0M	MCX	1.5m	0.0	5.0	1.5	3.5	380n	360u	.40		4	8	F310	DL14m
73	CD4094BY	8	1	SPS	5.0M	MCX	1.0m♦	0.0	10	.05%	9.95	250n	750u	.50		4	8	F330	MO001AC
74	DM86L70W	8	1	SPS	6.0M	BTX	45m	0.0	5.0	.70	2.0	120n	3.6m	.40		0	7	F345a	FL41
75	GZF1100	8	1	SPS	7.0M	MCT	50u♦	0.0	5.0	1.5	3.5	180n	1.6m	.40		4	8	F317	DL∅
76	HD1-54C164	8	1	SPS	8.0M	MCX	50n♦†	0.0	10	2.0	8.0	150n	10u	1.0		5	C	F310	ML93c
77	HD1-74C164	8	1	SPS	8.0M	MCX	50n♦†	0.0	10	2.0	8.0	150n	10u	1.0		4	8	74-164N	ML93c
78	HD9-54C164	8	1	SPS	8.0M	MCX	50n♦†	0.0	10	2.0	8.0	150n	10u	1.0		5	C	F310	TO86
79	HD9-74C164	8	1	SPS	8.0M	MCX	50n♦†	0.0	10	2.0	8.0	150n	10u	1.0		4	8	F310	TO86
80	RT808	8	1	SPS	10M	BTX	860m	0.0	5.0	.30	3.3					0	7	F269	
81	DM76L70F	8	1	SPS	12M	BTX	45m	0.0	5.0	.70	2.0	160n	2.0m	.30		5	C	F345a	FL43
82	DM76L70J	8	1	SPS	12M	BTX	45m	0.0	5.0	.70	2.0	160n	2.0m	.30		5	C	F345	DL14z
83	DM76L70N	8	1	SPS	12M	BTX	45m	0.0	5.0	.70	2.0	160n	2.0m	.30		5	C	F345	DL14m
84	DM78L70F	8	1	SPS	12M	BTX	45m	0.0	5.0	.70	2.0	160n	2.0m	.30		5	C	F345a	FL43
85	DM86L70F	8	1	SPS	12M	BTX	45m	0.0	5.0	.70	2.0	160n	3.6m	.40		0	7	F345a	FL43
86	DM86L70J	8	1	SPS	12M	BTX	45m	0.0	5.0	.70	2.0	160n	3.6m	.40		0	7	F345	DL14z
87	DM86L70N	8	1	SPS	12M	BTX	45m	0.0	5.0	.70	2.0	160n	3.6m	.40		0	7	F345	DL14m
88	DM88L70F	8	1	SPS	12M	BTX	45m	0.0	5.0	.70	2.0	160n	2.0m	.30		5	C	F345a	FL43
89	DM54L164AN	8	1	SPS	14M	BTX	45m	0.0	5.0	.70	2.0	135n	2.0m	.30		5	C	74-164	DL14m
90	DM74L164AJ	8	1	SPS	14M	BTX	45m	0.0	5.0	.70	2.0	135n	3.6m	.40		0	7	74-164	DL14z
91	DM74L164AW	8	1	SPS	14M	BTX	45m	0.0	5.0	.70	2.0	135n	3.6m	.40		0	7	74-164	FL41
92	MC54164AF	8	1	SPS	14M	BTX	185m†	0.0	5.0	.40%	2.4	50n	8.0m	.40		5	C	74-164	TO86
93	MC54164AL	8	1	SPS	14M	BTX	185m†	0.0	5.0	.40%	2.4	50n	8.0m	.40		5	C	74-164	DL14q
94	MC74164AF	8	1	SPS	14M	BTX	185m†	0.0	5.0	.40%	2.4	50n	8.0m	.40		0	7	74-164	TO86
95	MC74164AL	8	1	SPS	14M	BTX	185m†	0.0	5.0	.40%	2.4	50n	8.0m	.40		0	7	74-164	DL14q
96	MC74164AP	8	1	SPS	14M	BTX	185m†	0.0	5.0	.40%	2.4	50n	8.0m	.40		0	7	74-164	DL14aq
97	DM7570D	8	1	SPS	20M	BTX	270m	0.0	5.0	.80	2.0	40n	8.0m	.40		5	C	74-164N	ML63
98	54LS164J	8	1	SPS	25M	BTD	135m	0.0	5.0	.70	2.0	36n	4.0m	.40		5	C	74-164	DL14f
99	54LS164W	8	1	SPS	25M	BTD	135m	0.0	5.0	.70	2.0	36n	4.0m	.40		5	C	74-164	FL11c
100	74LS164J	8	1	SPS	25M	BTD	135m	0.0	5.0	.80	2.0	36n	4.0m	.40		0	7	74-164	DL14f
101	74LS164W	8	1	SPS	25M	BTD	135m	0.0	5.0	.80	2.0	36n	4.0m	.40		0	7	74-164	FL11c
102	SN74LS164W	8	1	SPS	25M	BTD	80m†	0.0	5.0	.80	2.0	36n	4.0m	.40		0	7	54-164W	FL61
103	DM8570J	8	1	SPS	25M	BTX	270m	0.0	5.0	.80	2.0	42n	8.0m	.40		0	7	F422	DL14z
104	DM8570W	8	1	SPS	25M	BTX		0.0	5.0	.80	2.0	42n	8.0m	.40		0	7	F422	FL41
105	DM74164J	8	1	SPS	25M	BTX	270m	0.0	5.0	.80	2.0	42n	8.0m	.40		0	7	74-164	DL14z
106	FLJ441-74164	8	1	SPS	25M	BTX	285m	0.0	5.0	.80	2.0	42n	8.0m	.40		0	7	74-164	DL∅
107	FLJ445-84164	8	1	SPS	25M	BTX	285m	0.0	5.0	.80	2.0	42n	8.0m	.40		2	8	74-164	DL∅
108	MIC54164J	8	1	SPS	25M	BTX	270m	0.0	5.0	.80	2.0	37n	8.0m	.40		5	C	74-164	TO116
109	MIC64164J	8	1	SPS	25M	BTX		0.0	5.0	.80	2.0	37n	8.0m	.40		4	8	74-164	TO116
110	MIC74164J	8	1	SPS	25M	BTX	270m	0.0	5.0	.80	2.0	37n	8.0m	.40		0	7	74-164	TO116

SYMBOLS AND CODES EXPLAINED IN INTERPRETER

7. SHIFT REGISTERS

IN ORDER OF(1)No.BITS/REG(2)No.REGISTERS (3)OP.CODE(4)MAX W/C FREQ(5)STRUCT(6)TYPE No

LINE No.	6 TYPE NUMBER	ORGANIZATION 1 BITS PER REGISTER	ORGANIZATION 2 NO REGS	3 OPER. CODE	4 MAX. WORST CASE FREQ. (Hz)	5 STRU-CTURE CODE	MAX. OPER. POWER DISS. (W)	RATED POWER SUPP. SPAN NEG. (V)	RATED POWER SUPP. SPAN POS. (V)	INPUT LOGIC LEVELS MAX. '0' (V)	INPUT LOGIC LEVELS MIN. '1' (V)	MAX. PROP. DELAY (S)	MIN. OUTPUT SINK CURRENT (A)	MIN. OUTPUT SINK CURRENT @ OUT (V)	MIN. CLOCK FREQ. (Hz)	OPER TEMP RNGE CODE -	OPER TEMP RNGE CODE +	DRAWINGS FUNCTIONAL EQUIVALENT NUMBER	DRAWINGS OUTLINE
1	MIC74164N	8	1	SPS	25M	BTX	270m	0.0	5.0	.80	2.0	37n	8.0m	.40		0	7	74-164	DL14w
2	RC54164A	8	1	SPS	25M	BTX	270m♦	0.0	5.0	.80	2.0	42n	8.0m	.40		5	C	74-164N	DL14g
3	RC54164F	8	1	SPS	25M	BTX	270m♦	0.0	5.0	.80	2.0	42n	8.0m	.40		5	C	74-164N	DL14s
4	DM54LS164N	8	1	SPS	36M	BTD	135m	0.0	5.0	.70	2.0	36n	4.0m	.40		5	C	74-164	DL14m
5	DM74LS164J	8	1	SPS	36M	BTD	135m	0.0	5.0	.80	2.0	36n	4.0m	.40		0	7	74-164	DL14z
6	DM74LS164W	8	1	SPS	36M	BTD	135m	0.0	5.0	.80	2.0	36n	4.0m	.40		0	7	74-164	FL41
7	FJB93164	8	1	SPS	36M	BTX	185m†	0.0	5.0	.80	2.0	42n	8.0m	.40		0	7	74-164	ML19g
8	uPB2164D	8	1	SPS	36M	BTX	150m	0.0	5.0	.80	2.0					2	7	PN14f	DL14ab
9	uPB74164C	8	1	SPS	36M	BTX	21m%	0.0	5.0	.80	2.0	42n	8.0m	.40		0	7	F422	DL14af
10	25LS22JC	8	1	SPS	50M	BTD	325m	0.0	5.0	.80	2.0§	30n	4.0m	.40		0	7	74LS322N	DLØ
11	25LS22JM	8	1	SPS	50M	BTD	325m	0.0	5.0	.70	2.0§	30n	4.0m	.40		5	C	74LS322N	DLØ
12	25LS22WC	8	1	SPS	50M	BTD	325m	0.0	5.0	.80	2.0§	30n	4.0m	.40		0	7	74LS322N	FLØ
13	25LS22WM	8	1	SPS	50M	BTD	325m	0.0	5.0	.70	2.0§	30n	4.0m	.40		5	C	74LS322N	FLØ
14	25LS23JC	8	1	SPS	50M	BTD	185m	0.0	5.0	.80	2.0§	23n	4.0m	.40		0	7	F429	DLØ
15	25LS23JM	8	1	SPS	50M	BTD	185m	0.0	5.0	.70	2.0§	23n	4.0m	.40		5	C	F429	DLØ
16	25LS23WC	8	1	SPS	50M	BTD	185m	0.0	5.0	.80	2.0§	23n	4.0m	.40		0	7	F429	FLØ
17	25LS23WM	8	1	SPS	50M	BTD	185m	0.0	5.0	.70	2.0§	23n	4.0m	.40		5	C	F429	FLØ
18	25LS299JC	8	1	SPS	50M	BTD	285m	0.0	5.0	.80	2.0§	27n	4.0m	.40		0	7	74S299N	DLØ
19	25LS299JM	8	1	SPS	50M	BTD	285m	0.0	5.0	.70	2.0§	27n	4.0m	.40		5	C	74S299N	DLØ
20	25LS299WC	8	1	SPS	50M	BTD	285m	0.0	5.0	.80	2.0§	27n	4.0m	.40		0	7	74S299N	FLØ
21	25LS299WM	8	1	SPS	50M	BTD	285m	0.0	5.0	.70	2.0§	27n	4.0m	.40		5	C	74S299N	FLØ
22	7491PC	8	1	SS	18M		175m	0.0	5.0	.80	2.0	40n			10M	0	7	74-91N	DL14m
23	M5391P	8	1	SSS		BTX	165m†	0.0	5.0	.40%	2.4	40n	18m	.40		0	7	F35a	TO116
24	uPD11A	8	1	SSS	100k	MPX	250m	24	0.0	-24	0.0	3.0u				2	7	F413	TO101
25	MC14014CL	8	1	SSS	1.0M	MCX	1.0mØ♦	0.0	10	.01%	9.99		500u	.50		4	8	F274	DL16bp
26	MC14014CP	8	1	SSS	1.0M	MCX	1.0mØ♦	0.0	10	.01%	9.99		500u	.50		4	8	F274	DL16ew
27	MC14014AL	8	1	SSS	1.5M	MCX	100uØ♦	0.0	10	.01%	9.99		900u	.50		5	C	F274	DL16bp
28	MC14549AL	8	1	SSS	3.0M	MCX	120m♦	0.0	10	.05%	9.95	250n	650u	.50		5	C	F260	DL16eq
29	MC14549CL	8	1	SSS	3.0M	MCX	28m♦	0.0	10	.05%	9.95	450n	400u	.50		4	8	F260	DL16eq
30	MC14549CP	8	1	SSS	3.0M	MCX	28m♦	0.0	10	.05%	9.95	450n	400u	.50		4	8	F260	DL16br
31	MC14559AL	8	1	SSS	3.0M	MCX	120m♦	0.0	10	.05%	9.95	250n	650u	.50		5	C	F260a	DL16eq
32	MC14559CL	8	1	SSS	3.0M	MCX	28m♦	0.0	10	.05%	9.95	450n	400u	.50		4	8	F260a	DL16eq
33	MC14559CP	8	1	SSS	3.0M	MCX	28m♦	0.0	10	.05%	9.95	450n	400u	.50		4	8	F260a	DL16br
34	GZN101	8	1	SSS	5.0M	MCX		0.0	5.0	1.5Ø	3.5	100n	1.6m	.40		0	7	F230	ML4a
35	SN74L91T	8	1	SSS	6.5M	BTX	17m†	0.0	5.0	.70	2.0	150n	3.6m	.40		0	7	F91	TO84
36	DM54L91F	8	1	SSS	8.0M	BTX	33m	0.0	5.0	.70	2.0	130n	2.0m	.30		5	C	F91	FL43
37	DM54L91N	8	1	SSS	8.0M	BTX	33m	0.0	5.0	.70	2.0	130n	2.0m	.30		5	C	F91	DL14m
38	DM74L91F	8	1	SSS	8.0M	BTX	33m	0.0	5.0	.70	2.0	130n	3.6m	.40		0	7	F91	FL43
39	DM74L91J	8	1	SSS	8.0M	BTX	33m	0.0	5.0	.70	2.0	130n	3.6m	.40		0	7	F91	DL14z
40	54LS91J	8	1	SSS	10M	BTD	100m	0.0	5.0	.70	2.0	40n	4.0m	.40		5	C	74-91N	DL14f
41	54LS91W	8	1	SSS	10M	BTD	100m	0.0	5.0	.70	2.0	40n	4.0m	.40		5	C	54-91W	FL66
42	74LS91J	8	1	SSS	10M	BTD	100m	0.0	5.0	.80	2.0	40n	4.0m	.40		0	7	74-91N	DL14f
43	74LS91W	8	1	SSS	10M	BTD	100m	0.0	5.0	.80	2.0	40n	4.0m	.40		0	7	54-91W	FL66
44	FJJ151	8	1	SSS	10M	BTX	175m†	0.0	5.0	.80	2.0	40n	16m	.40		0	7	F144	ML123
45	FJJ151-7491A	8	1	SSS	10M	BTX	175m	0.0	5.0	.80	2.0	40n	16m	.40		0	7	F144	TO116
46	FJJ151A-7491A	8	1	SSS	10M	BTX	175m	0.0	5.0	.80	2.0	40n				0	7	F144	TO116
47	FLJ221-7491A	8	1	SSS	10M	BTX	305m	0.0	5.0	.80	2.0	40n	16m	.40		0	7	F466	DLØ
48	FLJ225-8491A	8	1	SSS	10M	BTX	305m	0.0	5.0	.80	2.0	40n	16m	.40		2	8	F466	DLØ
49	HD2524	8	1	SSS	10M	BTX	304m	0.0	5.0	.80	2.0	40n	1.6m	.40		2	7	F35	ML100
50	HD2524P	8	1	SSS	10M	BTX	304m	0.0	5.0	.80	2.0	40n	1.6m	.40		2	7	F35	ML64c
51	MC5491AL	8	1	SSS	10M	BTX	175m†	0.0	5.0	.40%	2.4	40n	16m	.40		5	C	F35	DL14q
52	MC7491AL	8	1	SSS	10M	BTX	175m†	0.0	5.0	.40%	2.4	40n	16m	.40		0	7	F35	DL14q
53	MC7491AP	8	1	SSS	10M	BTX	175m†	0.0	5.0	.40%	2.4	40n	16m	.40		0	7	F35	DL14aq
54	MC8391F	8	1	SSS	10M	BTX	175m†	0.0	5.0	.40%	2.4	40n	16m	.40		0	7	F35b	FL32
55	MC8391L	8	1	SSS	10M	BTX	175m†	0.0	5.0	.40%	2.4	40n	16m	.40		0	7	F35	DL14q
56	MC8391P	8	1	SSS	10M	BTX	175m†	0.0	5.0	.40%	2.4	40n	16m	.40		0	7	F35	DL14aq
57	MC9391F	8	1	SSS	10M	BTX	175m†	0.0	5.0	.40%	2.4	40n	16m	.40		5	C	F35b	FL32
58	MC9391L	8	1	SSS	10M	BTX	175m†	0.0	5.0	.40%	2.4	40n	16m	.40		5	C	F35	DL14q
59	N7491Q	8	1	SSS	10M	BTX	175m†	0.0	5.0	.80	2.0	40n	16m	.40		0	7	F91	FL19
60	S5491Q	8	1	SSS	10M	BTX	175m†	0.0	5.0	.80	2.0	40n	16m	.40		5	C	F91	FL19
61	SN5491AN	8	1	SSS	10M	BTX	175m†	0.0	5.0	.80	2.0	40n	16m	.40		5	C	F91	DL14v
62	TMSR8	8	1	SSS	15M	BTX	175m	0.0	5.0	.22†	3.3	40n				0	7	F343	
63	MIC5491AJ	8	1	SSS	18M	BTX	175m†	0.0	5.0	.80	2.0	40n	16m	.40		5	C	F91	TO116
64	MIC6491AJ	8	1	SSS	18M	BTX	175m†	0.0	5.0	.80	2.0	40n	16m	.40		4	8	F91	TO116
65	MIC7491AJ	8	1	SSS	18M	BTX	175m†	0.0	5.0	.80	2.0	40n	16m	.40		0	7	F91	TO116
66	MIC7491AN	8	1	SSS	18M	BTX	175m†	0.0	5.0	.80	2.0	40n	16m	.40		0	7	F91	DL14w
67	SW5491AJ	8	1	SSS	18M	BTX	250m	0.0	5.0	.80	2.0	40n	16m	.40		5	C	F35	ML93
68	SW7491AJ	8	1	SSS	18M	BTX	290m	0.0	5.0	.80	2.0	40n	16m	.40		0	7	F35	ML93
69	SW7491AN	8	1	SSS	18M	BTX	290m	0.0	5.0	.80	2.0	40n	16m	.40		0	7	F35	ML64a
70	TL7491AN	8	1	SSS	18M	BTX	304m	0.0	5.0	.80	2.0	40n	16m	.40		0	7	F242	ML71a
71	uPB7491C	8	1	SSS	18M	BTX	290m♦	0.0	5.0	.80	2.0	40n	16m	.40		0	7	F35	DL14af
72	US5491A	8	1	SSS	18M	BTX	175m†	0.0	5.0	.80	2.0	40n	16m	.40		5	C	F91	ML86a
73	US5491J	8	1	SSS	18M	BTX	175m†	0.0	5.0	.80	2.0	40n	16m	.40		5	C	F91	FL20
74	US7491A	8	1	SSS	18M	BTX	175m†	0.0	5.0	.80	2.0	40n	16m	.40		0	7	F91	ML86a
75	US7491J	8	1	SSS	18M	BTX	175m†	0.0	5.0	.80	2.0	40n	16m	.40		0	7	F91	FL20
76	DM5491AJ	8	1	SSS	22M	BTX	250m	0.0	5.0	.80	2.0	40n	16m	.40		5	C	F91	DL14z
77	DM5491AN	8	1	SSS	22M	BTX	250m	0.0	5.0	.80	2.0	40n	16m	.40		5	C	F91	DL14m
78	DM5491AW	8	1	SSS	22M	BTX	250m	0.0	5.0	.80	2.0	40n	16m	.40		5	C	F91	FL41
79	DM7491AJ	8	1	SSS	22M	BTX	290m	0.0	5.0	.80	2.0	40n	16m	.40		0	7	F91	DL14z
80	DM7491AN	8	1	SSS	22M	BTX	290m	0.0	5.0	.80	2.0	40n	16m	.40		0	7	F91	DL14m
81	DM7491AW	8	1	SSS	22M	BTX	290m	0.0	5.0	.80	2.0	40n	16m	.40		0	7	F91	FL41
82	RC5491A	8	1	SSS	100M	BTX	175m†	0.0	5.0	.80	2.0	40n	16m	.40		5	C	74-91N	DL14g
83	RC5491F	8	1	SSS	100M	BTX	250m♦	0.0	5.0	.80	2.0	40n	16m	.40		5	C	74-91N	DL14y
84	RC5491W	8	1	SSS	100M	BTX	250m♦	0.0	5.0	.80	2.0	40n	16m	.40		5	C	54-91W	FL24
85	RT807	8	2	PPS	10M	BTX	900m	0.0	5.0	.30	3.3					0	7	F268	
86	FJJ371	8	2	SPS	20M	BTX	300m†	0.0	5.0	.80	2.0	35n	9.6m	.40		0	7	F233	MO001AE
87	HD3101P	8	2	SSD		MPX	100mØ	24	0.0	-9.0*	-4.0	1.5u			5.0k	2	7	F181	ML64c
88	uPD117C	8	2	SSS	100k	MPX		24	0.0	-9.3*	-3.7	2.5u	80u	-13		2	7	F416	MO001AA
89	MC8328L	8	2	SSS	1.0M	BTX	250m†	0.0	5.0	.45%	2.4	70n	3.0m	.45		0	7	F38	DL16bp
90	MC8328P	8	2	SSS	1.0M	BTX	250m†	0.0	5.0	.45%	2.4	70n	3.0m	.45		0	7	F38	DL16ev
91	MC9328L	8	2	SSS	1.0M	BTX	250m†	0.0	5.0	.40%	2.4	70n	3.0m	.40		5	C	F38	DL16bp
92	D4039	8	2	SSS	5.0M	BDX	1.5	0.0	5.0	.95	2.0	70n				0	7	F216	PL7
93	9228-1-4L	8	2	SSS	5.0M	BTX	115mØ	0.0	5.0	.80	1.4	65n	2.1m	.30		5	C	F1	FL14
94	9228-1-7B	8	2	SSS	5.0M	BTX	115mØ	0.0	5.0	.80	1.4	65n	2.1m	.30		5	C	F1	DL16au
95	9228-9-4L	8	2	SSS	5.0M	BTX	120mØ	0.0	5.0	.75	1.6	65n	2.3m	.35		0	7	F1	FL14
96	9228-9-7B	8	2	SSS	5.0M	BTX	120mØ	0.0	5.0	.75	1.6	65n	2.3m	.35		0	7	F1	DL16au
97	FJB93L28	8	2	SSS	10M	BTX	80m†	0.0	5.0	.70	2.0	65n	3.2m	.30		0	7	F1	ML4e
98	FLJ481-4932	8	2	SSS	10M	BTX	610m	0.0	5.0	.80	2.0	40n	16m	.40		0	7		DLØ
99	FLJ485-49832	8	2	SSS	10M	BTX	610m	0.0	5.0	.80	2.0	40n	16m	.40		2	8		DLØ
100	N8277E	8	2	SSS	15M	BTX	540m	0.0	5.0	.40%	2.6	40n	16m	.40		0	7	F122	ML61c
101	TMSR16	8	2	SSS	15M	BTX	350M	0.0	5.0	.22†	3.3	40n				0	7	F343a	
102	MIC9328-1D	8	2	SSS	20M	BTX	365m	0.0	5.0	.90	1.7	13n	3.0m	.40		5	C	F38	DL16fg
103	MIC9328-5D	8	2	SSS	20M	BTX	365m	0.0	5.0	.85	1.8	13n	3.0m	.40		0	7	F38	DL16fg
104	FJB9328	8	2	SSS	30M	BTX	300m†	0.0	5.0	.80	2.0	39n	16m	.40		0	7	F1	ML4e
105	5521	8	3	PSS	20M	BTX	810m	0.0	5.0	.45	2.0	35n	16m			0	6	F279	PL9
106	5520	8	3	SPS	20M	BTX	810m	0.0	5.0	.45	2.0	28n	8.0m			0	6	F278	PL9
107	TMSR24	8	3	SSS	15M	BTX	525m	0.0	5.0	.22†	3.3	40n				0	7	F344	
108	M58233P	8	4	SSD	100k	MXX	100m	14	0.0	-9.0	-3.5	2.0u			10k	1	7	F160	DL16bq
109	TMSR32	8	4	SSS	15M	BTX	700m	0.0	5.0	.22†	3.3	40n				0	7	F344a	
110	CM4014	8	8	PSS	1.0M	MCX	100u♦	0.0	10	10†	0.0	250n				5	C	40-14B	MO001AC

SYMBOLS AND CODES EXPLAINED IN INTERPRETER

7. SHIFT REGISTERS

IN ORDER OF(1)No.BITS/REG(2)No.REGISTERS (3)OP.CODE(4)MAX W/C FREQ(5)STRUCT(6)TYPE No

LINE No.	6 TYPE NUMBER	ORGANIZATION 1 BITS PER REGISTER	ORGANIZATION 2 NO REGS	3 OPER. CODE	4 MAX. WORST CASE FREQ. (Hz)	5 STRU-CTURE CODE	MAX. OPER. POWER DISS. (W)	RATED POWER SUPP. SPAN NEG. (V)	RATED POWER SUPP. SPAN POS. (V)	INPUT LOGIC LEVELS MAX. '0' (V)	INPUT LOGIC LEVELS MIN. '1' (V)	MAX. PROP. DELAY (S)	MIN. OUTPUT SINK CURRENT (A)	MIN. OUTPUT SINK CURRENT @ OUT (V)	MIN. CLOCK FREQ. (Hz)	OPER TEMP RNGE CODE -	OPER TEMP RNGE CODE +	DRAWINGS FUNCTIONAL EQUIVALENT NUMBER	DRAWINGS OUTLINE
1	S1709L	8	13	PPD	100k	MPA	510m†	12	5.0	.40	3.5	6.5u			10k	0	7	F46	DL24a
2	S1709	8	13	PPD	100k	MPX		12	5.0	.40	3.5	6.5u	1.6m	.30	10k	0	6	F46a	DL24ag
3	SCL4094BD	8	18	SPS	6M	MCX	125m♦	0.0	15			600n	1.0u△		1.2	5	C	40-94B	DL14ah
4	SCL4094BF	8	18	SPS	6M	MCX	125m♦	0.0	15			600n	1.0u△		1.2	5	C	40-94B	FL28
5	FR1502E2C	9	40	SSS	250k			12	5.0	0.8	3.5§	250n	-4mØ	0.0		0	7	PN28ai	DL28r
6	FR1502F2C	9	40	SSS	250k			12	5.0	0.8	3.5§	250n	-4mØ	0.0		0	7	PN28ai	DL28s
7	FR1502E1C	9	40	SSS	500k			12	5.0	0.8	3.5§	250n	-4mØ	0.0		0	7	PN28ai	DL28r
8	FR1502F1C	9	40	SSS	500k			12	5.0	0.8	3.5§	250n	-4mØ	0.0		0	7	PN28ai	DL28s
9	FR1502EC	9	40	SSS	1.0M			12	5.0	0.8	3.5§	250n	-4mØ	0.0		0	7	PN28ai	DL28r
10	FR1502FC	9	40	SSS	1.0M			12	5.0	0.8	3.5§	250n	-4mØ	0.0		0	7	PN28ai	DL28s
11	FR1502E3C	9	40	SSS	1.5M			12	5.0	0.8	3.54§	250n	-4mØ	0.0		0	7	PN28ai	DL28r
12	FR1502F3C	9	40	SSS	1.5M			12	5.0	0.8	3.5§	250n	-4mØ	0.0		0	7	PN28ai	DL28s
13	512	10	1		5.0M	BDX	260m	0.0	7.0	.45	2.0	30n				0	7		PL11
14	512T	10	1		20M	BTX	300m	0.0	7.0	.45	2.0	25n				0	7		PL11
15	MB454	10	1	PPS	4.0M	BTX	60m†	0.0	5.0	.80	2.0	160n				0	7	F391	DL16au
16	MB454M	10	1	PPS	4.0M	BTX	60m†	0.0	5.0	.80	2.0	160n				0	7	F391	ML221
17	N8274E	10	1	PPS	10M	BTX	567mØ	0.0	5.0	.40%	2.6	50n	16m	.40		0	7	F168	ML61c
18	N8274R	10	1	PPS	10M	BTX	567mØ	0.0	5.0	.40%	2.6	50n	16m	.40		0	7	F168	FL18
19	S8274E	10	1	PPS	10M	BTX	567mØ	0.0	5.0	.40%	2.6	50n	16m	.40		5	C	F168	ML61c
20	S8274R	10	1	PPS	10M	BTX	567mØ	0.0	5.0	.40%	2.6	50n	16m	.40		5	C	F168	FL18
21	RC8202F	10	1	PPS	15M	BTX	580m	0.0	5.0	.40%	2.6	45n	9.6m	.40		5	C	F302b	DL24cb
22	RC8202N	10	1	PPS	15M	BTX	580m	0.0	5.0	.40%	2.6	45n	9.6m	.40		5	C	F302b	DL24ar
23	RC8202Q	10	1	PPS	15M	BTX	580m	0.0	5.0	.40%	2.6	45n	9.6m	.40		5	C	F302b	FL3b
24	RC8203F	10	1	PPS	15M	BTX	580m	0.0	5.0	.40%	2.6	45n	9.6m	.40		5	C	F302c	DL24cb
25	RC8203N	10	1	PPS	15M	BTX	580m	0.0	5.0	.40%	2.6	45n	9.6m	.40		5	C	F302c	DL24ar
26	N8273E	10	1	PPS	25M	BTX	540mØ	0.0	5.0	.40%	2.6	40n	9.6m	.40		0	7	F167	ML61c
27	N8273R	10	1	PPS	25M	BTX	540mØ	0.0	5.0	.40%	2.6	40n	9.6m	.40		0	7	F167	FL18
28	S8273E	10	1	PPS	25M	BTX	540mØ	0.0	5.0	.40%	2.6	40n	9.6m	.40		5	C	F167	ML61c
29	S8273R	10	1	PPS	25M	BTX	540mØ	0.0	5.0	.40%	2.6	40n	9.6m	.40		5	C	F167	FL18
30	MM5081	10	1	SPS	50k	MPX		-16	0.0	-2.5	-7.0	2.0u	40u	-55		2	7	F69	ML63
31	ISR0253	10	1	SSS	5.0M	BDX	525m	0.0	5.0	.95	2.0	90n				0	7	F213	PL6
32	ISR2253	10	1	SSS	5.0M	BDX	525m	0.0	5.0	.95	2.0	90n				0	7	F213	PL6
33	MP210BE	10	4	SSS	1.0M	MPX	250m	24	0.0	-3.5	-10					2	7	F82	ML19d
34	MP210BF	10	4	SSS	1.0M	MPX	250m	24	0.0	-3.5	-10					2	7	F82	FL17
35	5519	12			25M	BTX	750m	0.0	5.0	.80	2.0	29n				0	7		PL11
36	D4208	12	2	PPS	10M	BTX	1.5	0.0	5.0	.80	2.0	70n				0	7	F217	PL7
37	HD3118P	12	2	SSD		MPX	150mØ	24	0.0	-9.0*	-4.0	2.0u			10k	2	7	F186	ML64c
38	MP212BE	12	4	SSS	1.0M	MPX	250m	24	0.0	-3.5	-10					2	7	F82	ML19d
39	MP212BF	12	4	SSS	1.0M	MPX	250m	24	0.0	-3.5	-10					2	7	F82	FL17
40	I768	16			25M	BTX	172m	0.0	7.0	.80	2.0	24n				0	7		PLØ
41	I769	16	1		20M	BTX		0.0	5.0	.80	2.0	40n				0	7		PLØ
42	5552BM	16	1	PPS	1.0M	BTX	425m	0.0	5.0	.70	2.0					5	C	F60a	FL13
43	5552CM	16	1	PPS	1.0M	BTX	425m	0.0	5.0	.70	2.0					0	7	F60a	FL13
44	M58201P	16	1	SSS	100k	MXX	120m†	14	0.0	-9.0	-3.5	1.5u				1	7	F157	DL16bq
45	UC6316	16	2	PPS	2.0M	MPA	350mØ	12	5.0	.80	3.5	225n	1.6m	.50		5	C	F121	TO99
46	UC7316	16	2	PPS	2.0M	MPA	350mØ	12	5.0	.80	3.5	225n	1.6m	.50		0	7	F121	TO99
47	SS7-8211	16	2	PPS	2.0M	MPX	150m	0.0	5.0	.80	-1.5	300n	1.6m	.40		0	7	F27	DLØ
48	HD3116P	16	2	SSD		MPX	200mØ	24	0.0	-9.0*	-4.0	2.0u			10k	2	7	F186	ML64c
49	uPD118C	16	2	SSS	100k	MPX		24	0.0	-9.3*	-3.7	2.5u	80u	-13		2	7	F416	MO001AA
50	RC2001K	16	2	SSS	1.0M	MPG		28	0.0	-2.0	-1.0	475n				5	8	F48	CY7
51	TMS3016LR	16	2	SSS	1.0M	MPT	450mØ	28	0.0	-2.0	-9.0	400n	1.0m	-11		5	8	F95e	TO100
52	3304-4-5F	16	2	SSS	1.0M	MPX	200mØ	27	0.0	-2.0	-9.0					5	8	F3a	TO100
53	3304-9-5F	16	2	SSS	1.0M	MPX	200mØ	27	0.0	-2.0	-9.0	10u				0	7	F3a	TO100
54	M122T1	16	2	SSS	1.0M	MPX	200mØØ	27	0.0	-2.0	-9.0					0	7	F3a	TO100
55	M122T8	16	2	SSS	1.0M	MPX	200mØØ	27	0.0	-2.0	-9.0					5	8	F3a	TO100
56	MM404H	16	2	SSS	1.0M	MPX	300mØ	18	0.0	-7.0*	2.5					5	C	F256a	TO99
57	MM504H	16	2	SSS	1.0M	MPX	300mØ	18	0.0	-7.0*	2.5					0	7	F256a	TO99
58	SS5-8211-31	16	2	SSS	2.0M	MPN	160m	12	5.0	.80	3.5	250n	1.6m	.40		0	7	F442	DL16bs
59	SS5-8212-12	16	2	SSS	2.0M	MPN	160m	12	5.0	.80	3.5	225n	1.6m	.40		0	7	F25d	DL8i
60	SS5-8212-16	16	2	SSS	2.0M	MPN	160m	12	5.0	.80	3.5	225n	1.6m	.40		0	7	F25	TO78
61	SS6-8211-55	16	2	SSS	2.0M	MPN	200m	12	5.0	.80	3.5	300n	1.6m	.40		5	C	F442	DL16d
62	SS6-8212-16	16	2	SSS	2.0M	MPN	200m	12	5.0	.80	3.5	300n	1.6m	.40		5	C	F25	TO78
63	SS6-8212-69	16	2	SSS	2.0M	MPN	200m	12	5.0	.80	3.5	300n	1.6m	.40		5	C	F25c	ML125b
64	SS7-2016-31	16	2	SSS	2.0M	MPN	160m	12	5.0	.80	3.5	250n	1.6m	.40		0	7	F442a	DL16bs
65	SS7-8212-30	16	2	SSS	2.0M	MPN	160m	12	5.0	.80	3.5	225n	1.6m	.40		0	7	F25c	DL14t
66	SS6-8211	16	2	SSS	2.0M	MPT	190m	12	5.0	.80	3.5	220n	1.6m	.40		5	C	F27	DL16ff
67	SS6-8212	16	2	SSS	2.0M	MPT	190m	12	5.0	.80	3.5	220n	1.6m	.40		5	C	F25	CY4b
68	SS7-8212	16	2	SSS	2.0M	MPX	150m	0.0	5.0	.80	-1.5	250n	1.6m	.40		0	7	F25	DL14t
69	MM4040H	16	2	SSS	2.2M	MPX	221mØ	12	5.0	.80	3.0	300n	1.6m	.40		5	C	F256a	TO99
70	MM5040H	16	2	SSS	2.2M	MPX	221mØ	12	5.0	.80	3.0	300n	1.6m	.40		0	7	F256a	TO99
71	MEM3021B	16	3	SSS	250k	MPT	146m	27	0.0	-2.0	-10		500u	-1.0		5	8	F24	CY4
72	3300-4-5F	16	3	SSS	250k	MPX	50m†Ø	27	0.0	-2.0	-9.0	1.0u	10u	-1.0		5	8	F3	TO100
73	M120T1	16	3	SSS	250k	MPX	50m†Ø	27	0.0	-2.0	-9.0	1.2u	10u	-1.0		0	7	F3	TO100
74	M120T8	16	3	SSS	250k	MPX	50m†Ø	27	0.0	-2.0	-9.0	1.2u	10u	-1.0		5	8	F3	TO100
75	MEM3021	16	3	SSS	500k	MPT	146m	27	0.0	-2.0	-10		500u	-1.0		5	8	F24	CY4
76	CRC1504-1-2	16	4	SSD	1.0M	MPN	700u%	12	5.0	0.5	4.3		1.6m	.40	50k	2	8	F137	DL24bd
77	CRC1504-2-2	16	4	SSD	1.0M	MPN	700u%	12	5.0	0.5	4.3		1.6m	.40	50k	2	8	F137	FL3
78	EA1208	16	4	SSD	3.0M	MPX	800mØ	28	0.0	-1.5	-9.0	80n			10k	5	8	F16b	ML63
79	FDN186	16	4	SSD	3.0M	MPX	800mØ	28	0.0	-9.0	1.5	100n			10k	5	8	F16b	TO116
80	CD40105BK	16	4	SSD	6.0M	MCX	500mØ	0.0	10	0.0†	10§	45n	1.8m	.50		5	C	F373	MO004AG
81	CD40105BY	16	4	SSD	6.0M	MCX	500mØ	0.0	10	0.0†	10§	45n	1.8m	.50		4	8	F373	MO001AE
82	3305-4-5F	16	4	SSS	1.0M	MPX	200m†Ø	27	0.0	-2.0	-9.0	500n	10u	-1.0		5	8	F5	TO100
83	3305-4-6J	16	4	SSS	1.0M	MPX	200m†Ø	27	0.0	-2.0	-9.0	500n	10u	-1.0		5	8	F5	DL16en
84	MP216BE	16	4	SSS	1.0M	MPX	250m	24	0.0	-3.5	-10					2	7	F82	ML19d
85	MP216BF	16	4	SSS	1.0M	MPX	250m	24	0.0	-3.5	-10					2	7	F82	FL17
86	SL7-4016-30	16	4	SSS	2.0M	MPN	450m†Ø	12	5.0	.80	3.5	250n	1.6m	.40		0	7	F441	DL14t
87	SL5-4016	16	4	SSS	2.0M	MPX	450m†Ø	12	5.0	.80	3.5	250n	1.6m	.40		0	7	F441	DL14t
88	SS5-1032-31	16	6	SSS	1.0M	MPX	200m†Ø	12	5.0	.80	3.5	450n	1.6m	.40		0	7	F440	DL16bs
89	SS6-1032-55	16	6	SSS	1.0M	MPX	200m†Ø	12	5.0	.80	3.5	450n	1.6m	.40		5	C	F440	DL16d
90	RT813	17	2	SPS	10M	BTX	1.7	0.0	5.0	.30	3.3					0	7	F271	
91	5551BM	20	1	PPS	1.0M	BTX	510m	0.0	5.0	.70	2.0					5	C	F60	FL13
92	5551CM	20	1	PPS	1.0M	BTX	510m	0.0	5.0	.70	2.0					0	7	F60	FL13
93	53MA14-1	24	1	SSD	1.0M	MPX	3.5m%†	20	0.0	-4.0Ø	-12	100n	1.0n△	-20	100	5	C	F12	CY3
94	MP224B	24	1	SSD	2.0M	MPX	50m†	16	0.0	-4.5	-10				10k	5	C	F85	TO99
95	MS618	24	4	SSS	2.5M	MCX	20n♦Ø	10	0.0	.01%	9.99	700n				5	C	F59	DLØ
96	M121T1	25	2	SPD	500k	MPX	2.0m%	27	0.0	-2.0	-9.0				10k	0	7	F4	TO100
97	M121T8	25	2	SPD	500k	MPX	2.0m%	27	0.0	-2.0	-9.0				10k	5	8	F4	TO100
98	3303-4-5F	25	2	SSD	500k	MPX		15	0.0	-2.0	-9.0				10k	5	8	F4	TO100
99	3303-9-5F	25	2	SSD	500k	MPX		15	0.0	-2.0	-9.0				10k	0	7	F4	TO100
100	MM400H	25	2	SSD	1.0M	MPX	500mØ	5.0	5.0	2.0	-7.0		1.6m	.40	600	5	C	F54	TO99
101	MM401H	25	2	SSD	1.0M	MPX	500mØ	5.0	5.0	2.0	-7.0		1.6m	.40	600	5	C	F54a	TO99
102	MM500H	25	2	SSD	1.0M	MPX	500mØ	5.0	5.0	2.0	-7.0		1.6m	.40	600	2	7	F54	TO99
103	MM501H	25	2	SSD	1.0M	MPX	500mØ	5.0	5.0	2.0	-7.0		1.6m	.40	600	2	7	F54a	TO99
104	RC2002K	25	2	SSS	1.0M	MPG		28	0.0	-2.0	-1.0	450n				5	8	F48	CY7
105	TMS3000LR	25	2	SSS	1.0M	MPT	450mØ	-28	0.0	-2.0	-9.0	475n	1.0m	-11		5	8	F95	TO100
106	SL6-4025-69	25	4	SSS	1.0M	MPN	325m	12	5.0	.80	3.5	450n	1.6m	.40		5	C	F441	ML125b
107	SL7-4025-30	25	4	SSS	1.0M	MPN	300m	12	5.0	.80	3.5	350n	1.6m	.40		0	7	F441	DL14t
108	SL6-4025	25	4	SSS	1.0M	MPT	300m	12	5.0	.80	3.5	400n	1.6m	.40		5	C	F26	DL14a
109	SL7-4025	25	4	SSS	1.0M	MPT	300m	12	5.0	.80	3.5	450n	1.6m	.40		0	7	F26	DL14t
110	SL5-4025	25	4	SSS	1.0M	MPX	300m	12	5.0	.80	3.5	350n	1.6m	.40		0	7	F441	DL14t

SYMBOLS AND CODES EXPLAINED IN INTERPRETER

7. SHIFT REGISTERS

IN ORDER OF(1)No.BITS/REG(2)No.REGISTERS (3)OP.CODE(4)MAX W/C FREQ(5)STRUCT(6)TYPE No

LINE No.	6 TYPE NUMBER	ORGANIZATION 1 BITS PER REGISTER	ORGANIZATION 2 NO REGS	3 OPER. CODE	4 MAX. WORST CASE FREQ. (Hz)	5 STRU-CTURE CODE	MAX. OPER. POWER DISS. (W)	RATED POWER SUPP. SPAN NEG. (V)	RATED POWER SUPP. SPAN POS. (V)	INPUT LOGIC LEVELS MAX. '0' (V)	INPUT LOGIC LEVELS MIN. '1' (V)	MAX. PROP. DELAY (S)	MIN. OUTPUT SINK CURRENT (A)	MIN. OUTPUT SINK CURRENT @ OUT (V)	MIN. CLOCK FREQ. (Hz)	OPER TEMP RNGE CODE -	OPER TEMP RNGE CODE +	DRAWINGS FUNCTIONAL EQUIVALENT NUMBER	DRAWINGS OUTLINE
1	MCS2104	25	4	SSS	2.0M	MPN	300m	12	5.0	.70	3.5	240n				5	C	F95g	DLØ
2	MD4330BD	30	1	SSS		MCX		0.0	18	.01%	9.99	300n	800u	.50		5	C	PN40n	DL40Ø
3	MD4331BE	30	1	SSS		MCX		0.0	18	.01%	9.99	300n	800u	.50		4	8	PN40n	
4	MS4331BC	30	1	SSS		MCX		0.0	18	.01%	9.99	300n	800u	.50		4	8	PN40n	
5	MS4331BD	30	1	SSS		MCX		0.0	18	.01%	9.99	300n	800u	.50		5	C	PN40n	DL40Ø
6	RT809	30	1	SSS	10M	BTX	1.7	0.0	5.0	.30	3.3					0	7	F270	
7	MD4332BC	32	1	SSS		MCX		0.0	18	.01%	9.99	300n	800u	.50		4	8	PN40o	DL40Ø
8	CD40100BK	32	1	SSS	3.0M	MCX	500mØ	0.0	15	.05	14.9	230n	3.4m	1.5		5	C	40-100B	MO004AG
9	55MA25-1	32	2	SSD	1.0M	MPX	3.0m%†	20	0.0	-4.0Ø	-12				100	5	C	F12a	CY2a
10	MTS1002	32	2	SSS	1.0M	MPC	85m	16	0.0	-7.0	-2.5	750n				2	8	F120j	TO99
11	RC2003K	32	2	SSS	1.0M	MPG		28	0.0	-2.0	-1.0	450n				5	8	F48	CY7
12	TMS3001LR	32	2	SSS	1.0M	MPT	450mØ	-28	0.0	-2.0	-9.0	475n	1.0m	-11		5	8	F95a	TO100
13	MM405H	32	2	SSS	1.0M	MPX	300mØ	18	0.0	-7.0*	2.5					5	C	F256a	TO99
14	MM505H	32	2	SSS	1.0M	MPX	300mØ	18	0.0	-7.0*	2.5					0	7	F256a	TO99
15	MM4050	32	2	SSS	1.0M	MPX		12	5.0	1.0♦	2.5	500n	1.6m	8.0		5	C	F66	TO99
16	MM4051	32	2	SSS	1.0M	MPX		12	5.0	1.0♦	2.5	500n	1.6m	8.0		5	C	F67	TO99
17	MM5050	32	2	SSS	1.0M	MPX		12	5.0	1.0♦	2.5	500n	1.6m	8.0		2	7	F66	TO99
18	MM5051	32	2	SSS	1.0M	MPX		12	5.0	1.0♦	2.5	500n	1.6m	8.0		2	7	F67	TO99
19	EA1003	32	2	SSS	1.5M	MPX	400mØ	28	0.0	-2.0	-9.0	260n				5	8	F13	ML63
20	EA1007	32	2	SSS	1.5M	MPX	300mØ	28	0.0	-2.0	-9.0	260n				5	8	F14	TO100
21	FDN506	32	2	SSS	1.5M	MPX	800mØ	28	0.0	-9.0	-2.0					5	8	F13a	TO116
22	FDN516A	32	2	SSS	1.5M	MPX	625mØ	28	0.0	-9.0	-2.0					5	8	F14	TO100
23	M140T1	32	2	SSS	2.0M	MPN	100m	12	5.0	.80	3.5	150n	1.6m	.40		0	7	F305	TO100
24	M140T2	32	2	SSS	2.0M	MPN	100m	12	5.0	.80	3.5	150n	1.6m	.40		5	C	F305	TO100
25	MTS2103	32	2	SSS	2.0M	MPN	285m	12	5.0	1.0	4.5	300n				5	C	F120j	TO99
26	MM4050AD	32	2	SSS	2.2M	MPX	272mØ	12	5.0	.80	3.0	300n	1.6m	.40		5	C	F226	ML179
27	MM4050AH	32	2	SSS	2.2M	MPX	272mØ	12	5.0	.80	3.0	300n	1.6m	.40		5	C	F133d	TO99
28	MM4051AH	32	2	SSS	2.2M	MPX	272mØ	12	5.0	.80	3.0	300n	1.6m	.40		5	C	F67	TO99
29	MM5050AD	32	2	SSS	2.2M	MPX	272mØ	12	5.0	.80	3.0	300n	1.6m	.40		0	7	F226	ML179
30	MM5050AH	32	2	SSS	2.2M	MPX	272mØ	12	5.0	.80	3.0	300n	1.6m	.40		0	7	F133d	TO99
31	MM5051AH	32	2	SSS	2.2M	MPX	272mØ	12	5.0	.80	3.0	300n	1.6m	.40		0	7	F67	TO99
32	RS2-32	32	2	SSS	3.0M	MXG	180m†	12	5.0	.80	4.0	280n	1.6m	.80		2	7	F67	TO99
33	3306-4-5F	32	3	SSS	1.0M	MPX	200m†Ø	27	0.0	-2.0	-9.0	500n	10u	-1.0		5	8	F6	TO100
34	3306-4-6J	32	3	SSS	1.0M	MPX	200m†Ø	27	0.0	-2.0	-9.0	500n	10u	-1.0		5	8	F6	DL16en
35	M124T1	32	3	SSS	1.0M	MPX	200m†	27	0.0	-2.0	-9.0	500n	10u	-1.0		0	7	F6	TO100
36	M124T8	32	3	SSS	1.0M	MPX	200m†	27	0.0	-2.0	-9.0	500n	10u	-1.0		5	8	F6	TO100
37	M134T1	32	3	SSS	2.0M	MPN	250mØ	5.0	5.0	5.3	.60	115n	10u	4.0		0	7	F163	TO100
38	CRC1502-1-2	32	4	SSD	1.0M	MPN	700u%	12	5.0	0.5	4.3		1.6m	.40	50k	2	8	F138	DL24bd
39	CRC1502-2-2	32	4	SSD	1.0M	MPN	700u%	12	5.0	0.5	4.3		1.6m	.40	50k	2	8	F138	FL3
40	CRC1503-1-2	32	4	SSD	1.0M	MPN	700u%	12	5.0	0.5	4.3		1.6m	.40	50k	2	8	F139	ML20
41	CRC1503-2-2	32	4	SSD	1.0M	MPN	700u%	12	5.0	0.5	4.3		1.6m	.40	50k	2	8	F139	FL4
42	EA1201	32	4	SSD	1.0M	MPX	300mØ	28	0.0	-1.5	-9.0	300n			10k	5	8	F16a	ML63
43	FDN116	32	4	SSD	1.0M	MPX	300m	28	0.0	-9.0	-1.5	100n			10k	5	8	F16a	TO116
44	EA1200	32	4	SSD	3.0M	MPX	300mØ	28	0.0	-1.5	-9.0	70n			10k	5	8	F16	ML63
45	FDN106	32	4	SSD	3.0M	MPX	300m	28	0.0	-9.0	-1.5	100n			10k	5	8	F16	TO116
46	SL6-4032-69	32	4	SSS	1.0M	MPN	325m	12	5.0	.80	3.5	450n	1.6m	.40		5	C	F441	ML125b
47	SL7-4032-30	32	4	SSS	1.0M	MPN	300m	12	5.0	.80	3.5	350n	1.6m	.40		0	7	F441	DL14t
48	SL6-4032	32	4	SSS	1.0M	MPT	300m	12	5.0	.80	3.5	400n	1.6m	.40		5	C	F26	DL14a
49	SL7-4032	32	4	SSS	1.0M	MPT	300m	12	5.0	.80	3.5	450n	1.6m	.40		0	7	F26	DL14t
50	SL5-4032	32	4	SSS	1.0M	MPX	300m	12	5.0	.80	3.5	350n	1.6m	.40		0	7	F441	DL14t
51	MSM544	32	4	SSS	2.0M	MCX	1.5m♦	0.0	5.0	.80	3.6	1.0u	1.6m†	.40		3	8	F396	DL16fc
52	2518B	32	6	SSS	2.0M	MPG	640mØ	12	5.0	.60	3.4	350n	1.6m	.50		0	7	F129	DL16az
53	2518I	32	6	SSS	2.0M	MPG	640mØ	12	5.0	.60	3.4	350n	1.6m	.50		0	7	F129	ML171
54	2518N	32	6	SSS	2.0M	MPG	640mØ	12	5.0	.60	3.4	350n	1.6m	.50		0	7	F129	DL16fm
55	TMS3122JC	32	6	SSS	2.0M	MPT	500m	12	5.0	1.0	3.7	440n	1.6m	.60		2	8	F98a	DL16k
56	TMS3122NC	32	6	SSS	2.0M	MPT	500m	12	5.0	1.0	3.7	440n	1.6m	.60		2	8	F98a	DL16ez
57	TMS3123JC	32	6	SSS	2.0M	MPT	500m	12	5.0	1.0	3.2	400n	2.0m	.60		2	8	F98b	ML119
58	TMS3123NC	32	6	SSS	2.0M	MPT	500m	12	5.0	1.0	3.2	400n	2.0m	.60		2	8	F98b	DL18a
59	2518F	32	6	SSS	2.0M	MPX		5.0	0.0									F129	DL16cv
60	TMS3112JC	32	6	SSS	2.0M	MPX	500m	12	5.0	1.0	3.7	440n	1.6m	.60		2	8	F475	DL24de
61	TMS3112NC	32	6	SSS	2.0M	MPX	500m	12	5.0	1.0	3.7	440n	1.6m	.60		2	8	F475	ML23
62	MK4012P	32	8	PPS	500k	MXX	500mØ	12	5.0	0.0	3.25		1.6m	.40		0	C	F231	DLØ
63	RS03G	40	2	SSS	1.0M		450mØ	15	0.0	-3.5	-9.0					5	C	F43	TO100
64	RS53G	40	2	SSS	1.0M		450mØ	15	0.0	-3.5	-9.0					2	7	F43	TO100
65	S1708	40	4	SSD	1.0M	MPI	400m♦	12	5.0	.90	4.0	200n	1.6m	.40	15k	0	7	F44a	CY6
66	2519B	40	6	SSS	2.0M	MPG	640mØ	12	5.0	.60	3.4	350n	1.6m	.50		0	7	F129	DL16az
67	2519I	40	6	SSS	2.0M	MPG	640mØ	12	5.0	.60	3.4	350n	1.6m	.50		0	7	F129	ML171
68	2519N	40	6	SSS	2.0M	MPG	640mØ	12	5.0	.60	3.4	350n	1.6m	.50		0	7	F129	DL16fm
69	2519F	40	6	SSS	2.0M	MPX		5.0	0.0									F129	DL16cv
70	FR1502E02	40	9	SSS	250k	MPX	685m♦	12	5.0	.80	3.5§	500n	1.6m	.40		0	7	F297	DL28r
71	FR1502E12	40	9	SSS	250k	MPX	685m♦	12	5.0	.80	3.5§	500m	1.6m	.40		0		F297	DL28r
72	FR1502F02	40	9	SSS	250k	MPX	685m♦	12	5.0	.80	3.5§	500m	1.6m	.40		0	7	F297	DL28r
73	FR1502F12	40	9	SSS	250k	MPX	685m♦	12	5.0	.80	3.5§	500m	1.6m	.40		0	7	F297	
74	FR1502E01	40	9	SSS	500k	MPX	685m♦	12	5.0	.80	3.5§	500n	1.6m	.40		0	7	F297	DL28c
75	FR1502F01	40	9	SSS	500k	MPX	685m♦	12	5.0	.80	3.5§	500m	1.6m	.40		0	7	F297	DL28r
76	FR1502E00	40	9	SSS	1.0M	MPX	685m♦	12	5.0	.80	3.5§	500m	1.6m	.40		0	7	F297	DL28r
77	FR1502E	40	9	SSS	1.0M	MPX	685m♦	12	5.0	.80	3.5§	500n	1.6m	.40		0	7	F297	DL28c
78	FR1502F00	40	9	SSS	1.0M	MPX	685m♦	12	5.0	.80	3.5§	500m	1.6m	.40		0		F297	DL28r
79	HD3117P	44	2	SSD		MPX	60mØ	24	0.0	-9.0*	-4.0	1.5u			10k	2	7	F183	ML64c
80	M5823P	44	2	SSD	100k	MXX	40m	14	0.0	-9.0	-3.0	3.5u			5.0k	0	7	F41	TO116
81	uPD107C	48	2	SSD	100k	MPX		24	0.0	-9.3*	-3.7	2.5u	80u	-13		2	7	F414	MO001AA
82	M58232P	48	2	SSD	100k	MXX	150m	14	0.0	-9.0	-3.5	2.0u			10k	1	7	F159	DL16bq
83	TL1161G	50	2	MPX	2.0M	SSS	680mØ	15	0.0	-3.0	-9.0	250n				5	8	F34	CY1b
84	UC7355	50	2	PPS	2.0M	MPA	350mØ	12	5.0	.80	3.5	250n	1.6m	.50		0	7	F121	TO99
85	RD55D	50	2	SSD	1.0M		475mØ	20	0.0	-3.5	-9.0		1.5m†	0.0	10k	2	7	F8	FL5a
86	RD55G	50	2	SSD	1.0M		450mØ	20	0.0	-3.5	-9.0		1.5m†	0.0	10k	2	7	F8a	CY1
87	MM402H	50	2	SSD	1.0M	MPX	500mØ	5.0	5.0	2.0	-7.0		1.6m	.40	600	5	C	F54b	TO99
88	MM403H	50	2	SSD	1.0M	MPX	500mØ	5.0	5.0	2.0	-7.0		1.6m	.40	600	5	C	F54c	TO99
89	MM502H	50	2	SSD	1.0M	MPX	500mØ	5.0	5.0	2.0	-7.0		1.6m	.40	600	2	7	F54b	TO99
90	MM503H	50	2	SSD	1.0M	MPX	500mØ	5.0	5.0	2.0	-7.0		1.6m	.40	600	2	7	F54c	TO99
91	RD05D	50	2	SSD	1.0M	MXX	475mØ	20	0.0	-3.5Ø	-9.0		1.5m†	0.0	1.0k	5	C	F8	FL5a
92	RD05G	50	2	SSD	1.0M	MXX	450mØ	20	0.0	-3.5Ø	-9.0		1.5m†	0.0	1.0k	5	C	F8a	CY1
93	RD12C	50	2	SSD	1.0M	MXX	10m†	0.0	5.0	1.3Ø	3.3	400n	300u†	0.0	10k	5	C	F10	FL16
94	RD12F	50	2	SSD	1.0M	MXX	10m†	0.0	5.0	1.3Ø	3.3	400n	300u†	0.0	10k	5	C	F10a	CY2
95	MTS1100	50	2	SSD	2.0M	MPC	100m	10	0.0	7.0	2.0	350n			10k	2	8		
96	MSM540	50	2	SSD	5.0M	MCX	750u♦	0.0	5.0	.80	3.6	500n	15u†	.20	10k	3	8	F392	ML64e
97	RD07C	50	2	SSD	5.0M	MNT	500u%†	15	0.0	-3.5Ø	-9.0		400uØ	0.0	1.0k	5	C	F9	FL16
98	RD07F	50	2	SSD	5.0M	MNT	500u%†	15	0.0	-3.5Ø	-9.0		400uØ	0.0	1.0k	5	C	F9	CY2
99	RD10C	50	2	SSD	10M	MNT	500u%†	15	0.0	-3.5Ø	-9.0		400uØ	0.0	1.0k	5	C	F9	FL16
100	RD10F	50	2	SSD	10M	MNT	500u%†	15	0.0	-3.5Ø	-9.0		400uØ	0.0	1.0k	5	C	F9	CY2
101	RC2004K	50	2	SSS	1.0M	MPG		28	0.0	-2.0	-1.0	450n				5	8	F48	CY7
102	SL5-2050-12	50	2	SSS	1.0M	MPN	275m	12	5.0	.80	3.5	400n	1.6m	.40		0	7	F25d	DL8i
103	SL5-2050-16	50	2	SSS	1.0M	MPN	275m	12	5.0	.80	3.5	400n	1.6m	.40		0	7	F25	TO78
104	SL5-2050-30	50	2	SSS	1.0M	MPN	275m	12	5.0	.80	3.5	400n	1.6m	.40		0	7	F25a	DL14t
105	SL6-2050-16	50	2	SSS	1.0M	MPN	300m	12	5.0	.80	3.5	500n	1.6m	.40		5	C	F25	TO78
106	SL6-2050-69	50	2	SSS	1.0M	MPN	300m	12	5.0	.80	3.5	500n	1.6m	.40		5	C	F25a	ML125b
107	SL7-2050	50	2	SSS	1.0M	MPN	260m	0.0	5.0	.80	-1.5	400n	1.6m	.40		0	7	F25a	
108	SL7-2050-30	50	2	SSS	1.0M	MPN	275m	12	5.0	.80	3.5	400n	1.6m	.40		0	7	F25e	DL14t
109	SL6-2050	50	2	SSS	1.0M	MPT	300m	12	5.0	.80	3.5	400n	1.6m	.40		5	C	F25	CY4b
110	TMS3002LR	50	2	SSS	1.0M	MPT	450mØ	28	0.0	-2.0	-9.0	400n	1.0m	-11		5	8	F95b	TO100

SYMBOLS AND CODES EXPLAINED IN INTERPRETER

7. SHIFT REGISTERS

IN ORDER OF(1)No.BITS/REG(2)No.REGISTERS (3)OP.CODE(4)MAX W/C FREQ(5)STRUCT(6)TYPE No

LINE No.	6 TYPE NUMBER	ORGANIZATION 1 BITS PER REGISTER	ORGANIZATION 2 NO REGS	3 OPER. CODE	4 MAX. WORST CASE FREQ. (Hz)	5 STRU-CTURE CODE	MAX. OPER. POWER DISS. (W)	RATED POWER SUPP. SPAN NEG. (V)	RATED POWER SUPP. SPAN POS. (V)	INPUT LOGIC LEVELS MAX. '0' (V)	INPUT LOGIC LEVELS MIN. '1' (V)	MAX. PROP. DELAY (S)	MIN. OUTPUT SINK CURRENT (A)	MIN. OUTPUT SINK CURRENT @ OUT (V)	MIN. CLOCK FREQ. (Hz)	OPER TEMP RNGE CODE -	OPER TEMP RNGE CODE +	DRAWINGS FUNCTIONAL EQUIVALENT NUMBER	DRAWINGS OUTLINE
1	EA1013	50	2	SSS	1.5M	MPA	300m	14	12	10	3.0	550n				5	8		
2	2509A	50	2	SSS	1.5M	MPG	535mØ	5.0	5.0	.60	3.4§	300n	1.6m	.50		0	7	F128	DL14g
3	2509K	50	2	SSS	1.5M	MPG	535mØ	12	5.0	.60	3.4§	500n	1.6m	.50		0	7	F128a	CY7
4	2509N	50	2	SSS	1.5M	MPG	535mØ	12	5.0	.60	3.4	500n	1.6m	.50		0	7	F128	DL14g
5	MC1161G	50	2	SSS	2.0M	MPX	680mØØ	12	0.0	-3.0	-9.0	250n				5	8	F34	CY1b
6	EA1012	50	2	SSS	3.0M	MPA	250m	14	12	10	3.0	275n				5	8		
7	M5826P	52	2	SSD	100k	MXX	47m	14	0.0	-9.0	-3.0	3.5u			5.0k	0	7	F41	TO116
8	M5825P	60	2	SSD	100k	MXX	54m	14	0.0	-9.0	-3.0	3.5u			5.0k	0	7	F41a	TO116
9	uPD351C	60	3	PPD	100k	MXX		24	0.0	-9.0*	-4.0	2.5u				1	7	PN16de	MO001AC
10	HD3109P	60	3	SSD		MPX	70mØ	24	0.0	-9.0*	-4.0	3.0u			10k	2	7	F182	ML88a
11	HD3119P	60	3	SSD		MPX	70mØ	24	0.0	-9.0*	-4.0	1.5u			10k	2	7	F187	DL16cg
12	TMS3314JC	60	6	SSD	2.0M	MPT	280mØ	14	0.0	.30	-8.0	300n	2.0m♦	-14	10k	2	8	F116	DL16k
13	TMS3314JR	60	6	SSD	2.0M	MPT	280mØ	14	0.0	.30	-8.0	300n			10k	5	8	F101	ML43a
14	TMS3314NC	60	6	SSD	2.0M	MPT	280mØ	14	0.0	.30	-8.0	300n	2.0m♦	-14	10k	2	8	F116	DL16ez
15	HD21S145	64	1	PPS		BEX		4.5	0.0	1.81*	.88					0	8	F568	
16	HD3224P	64	1	SSD		MPX		14	0.0	-6.5*	-2.0	1.5u			10k	2	7	F200	DL16cg
17	EA1203	64	1	SSD	1.0M	MPX	300mØ	28	0.0	-1.5	-9.0	300n			10k	5	8	F17a	ML63
18	FDN136	64	1	SSD	1.0M	MPX	800mØ	28	0.0	-9.0	-1.5	80n			10k	5	8	F17	TO116
19	GDN116	64	1	SSD	2.0M			30	0.0	-1.0	-24		100u	27	10k	5	8	F170	TO87
20	GDN116A	64	1	SSD	2.0M			30	0.0	-1.0	-24		100u	27	10k	5	8	F170a	TO74
21	3320-4-5F	64	1	SSD	2.0M	MPX	200u†%	27	0.0	-1.0	-24				10k	5	8	F7	TO100
22	EA1202	64	1	SSD	3.0M	MPX	300mØ	28	0.0	-1.5	-9.0	70n			10k	5	8	F17	ML63
23	FDN126	64	1	SSD	3.0M	MPX	800mØ	28	0.0	-9.0	-1.5	80n			10k	5	8	F17a	TO116
24	GYN101A	64	1	SSD	3.0M	MPX	250mØ	5.0	5.0	-4.2	-1.5	90n				0	7	F228	CY4a
25	4557BDC	64	1	SSS		MCX	400mØ	0.0	15	4.0	11		4.5m	1.5		4	8	PN16fg	DL16df
26	4557BDM	64	1	SSS		MCX	400mØ	0.0	15	4.0	11		4.5m	1.5		5	C	PN16fg	DL16df
27	4557BFC	64	1	SSS		MCX	400mØ	0.0	15	4.0	11		4.5m	1.5		4	8	PN16fg	FL14j
28	4557BFM	64	1	SSS		MCX	400mØ	0.0	15	4.0	11		4.5m	1.5		5	C	PN16fg	FL14j
29	4557BPC	64	1	SSS		MCX	400mØ	0.0	15	4.0	11		4.5m	1.5		4	8	PN16fg	DL16dh
30	CD4031AY	64	1	SSS	1.0M	MCX	14m♦	0.0	10	.05%	9.95	800n	80u	.50		4	8	F176	MO001AC
31	SCL51360F	64	1	SSS	1.0M	MCX	2.0u♦%	0.0	5.0	.50Ø	4.5					5	C	F56	TO86
32	SCL51360T	64	1	SSS	1.0M	MCX	2.0u♦%	0.0	5.0	.50Ø	4.5					5	C	F57	TO97
33	SCL51362F	64	1	SSS	1.0M	MCX	40u♦%	0.0	5.0	.50Ø	4.5					5	C	F56	TO86
34	SCL51362T	64	1	SSS	1.0M	MCX	40u♦%	0.0	5.0	.50Ø	4.5					5	C	F57	TO97
35	MC14557CL	64	1	SSS	2.7M	MCX	14m♦	0.0	10	.05%	9.95	510n	400u	.50		4	8	F299	DL16db
36	MC14557CP	64	1	SSS	2.7M	MCX	14m♦	0.0	10	.05%	9.95	510n	400u	.50		4	8	F299	DL16ew
37	CD4031BCJ	64	1	SSS	5.0M	MCX	1.2m♦	0.0	15	4.0	11	200n	3.0m	1.5		4	8	F515	DL16cr
38	CD4031BCN	64	1	SSS	5.0M	MCX	1.2m♦	0.0	15	4.0	11	200n	3.0m	1.5		4	8	F515	DL16bh
39	CD4031BMJ	64	1	SSS	5.0M	MCX	300u♦	0.0	15	4.0	11	200n	3.4m	1.5		5	C	F515	DL16cr
40	CD4031BMW	64	1	SSS	5.0M	MCX	300u♦	0.0	15	4.0	11	200n	3.4m	1.5		5	C	F515	FL37a
41	MC14557AL	64	1	SSS	5.0M	MCX	14m♦	0.0	10	.05%	9.95	255n	650u	.50		5	C	F299	DL16db
42	SCL5132H	64	1	SSS	10M	MCX	200mØ	0.0	10	.05%	9.95	300n	120u%	9.5				F190	CHØ
43	SCL5132T	64	1	SSS	10M	MCX	200mØ	0.0	10	.05%	9.95	300n	120u%	9.5		5	C	F190b	CY1c
44	SCL5136D	64	1	SSS	10M	MCX	200mØ	0.0	10	.05%	9.95	300n	120u%	9.5		5	C	F190	DL16aw
45	SCL5136F	64	1	SSS	10M	MCX	200mØ	0.0	10	.05%	9.95	300n	120u%	9.5		5	C	F190	FL11a
46	SCL5136H	64	1	SSS	10M	MCX	200mØ	0.0	10	.05%	9.95	300n	120u%	9.5				F190	CHØ
47	SCL5136T	64	1	SSS	10M	MCX	200mØ	0.0	10	.05%	9.95	300n	120u%	9.5		5	C	F190a	CY1c
48	SCL51380F	64	1	SSS	10M	MCX	6.0u♦%	0.0	15	.50Ø	14.5					5	C	F56	TO86
49	SCL51380T	64	1	SSS	10M	MCX	6.0u♦%	0.0	15	.50Ø	14.5					5	C	F57	TO97
50	SCL51382F	64	1	SSS	10M	MCX	120u♦%	0.0	15	.50Ø	14.5					5	C	F56	TO86
51	SCL51382T	64	1	SSS	10M	MCX	120u♦%	0.0	15	.50Ø	14.5					5	C	F57	TO97
52	CD4031BK	64	1	SSS	16M	MCX	500mØ	0.0	15	4.0	11	80n	6.8m†	1.5		5	C	F507	MO004AG
53	MS612	64	1	SSS	25M	MCX	10u♦Ø	10	0.0	.01Ø	9.99	40n				5	C	F58	DLØ
54	HD3213P	64	2	PPD	100k	MPX		14	0.0	-6.5*	-2.0	1.5u			10k	2	7	F184	DL16cg
55	uPD109A	64	2	SSD	100k	MPX		24	0.0	-24	0.0	2.0u	80u	-13		2	7	F415	TO101
56	MM4001AH	64	2	SSD	2.5M	MPX	119mØ	12	5.0	.80	3.0	200n	1.6m	.40	10k	5	C	PN10a	TO100
57	MM4010AH	64	2	SSD	2.5M	MPX	119mØ	12	5.0	.80	3.0	200n	1.6m	.40	10k			F193	TO100
58	MM5001AH	64	2	SSD	2.5M	MPX	119mØ	12	5.0	.80	3.0	200n	1.6m	.40	10k	0	7	PN10a	TO100
59	MM5010AH	64	2	SSD	2.5M	MPX	119mØ	12	5.0	.80	3.0	200n	1.6m	.40	10k	0	7	F193	TO100
60	MM5011A	64	2	SSD	2.5M	MPX	300m	12	5.0	.80	3.0		1.6m	.400	600				
61	MM410	64	2	SSD	4.0M	MPX	500mØ	20	0.0	-2.5	-7.0				10k	5	C	F172	CNØ
62	MM510	64	2	SSD	4.0M	MPX	500mØ	20	0.0	-2.5	-7.0				10k	2	7	F172	CNØ
63	CRC1001-3-1	64	2	SSS	1.0M	MPN	220m	12	5.0	.80	3.5	400n	1.6m	.40		5	C	F25	CY4b
64	SL5-2064-12	64	2	SSS	1.0M	MPN	275m	12	5.0	.80	3.5	400n	1.6m	.40		0	7	F25d	DL8i
65	SL5-2064-16	64	2	SSS	1.0M	MPN	275m	12	5.0	.80	3.5	400n	1.6m	.40		0	7	F25	TO78
66	SL5-2064-30	64	2	SSS	1.0M	MPN	275m	12	5.0	.80	3.5	400n	1.6m	.40		0	7	F25a	DL14t
67	SL6-2064-16	64	2	SSS	1.0M	MPN	300m	12	5.0	.80	3.5	500n	1.6m	.40		5	C	F25	TO78
68	SL7-2064	64	2	SSS	1.0M	MPN	260m	0.0	5.0	.80	-1.5	400n	1.6m	.40		0	7	F25a	
69	SL7-2064-30	64	2	SSS	1.0M	MPN	275m	12	5.0	.80	3.5	400n	1.6m	.40		0	7	F25e	DL14t
70	SL6-2064	64	2	SSS	1.0M	MPT	300m	12	5.0	.80	3.5	400n	1.6m	.40		5	C	F25	CY4b
71	MC14517CL	64	2	SSS	1.5M	MCX	1.0mØ♦	0.0	10	.01%	9.99§		500u	.50		4	8	F248	DL16bp
72	MC14517CP	64	2	SSS	1.5M	MCX	1.0mØ♦	0.0	10	.01%	9.99§		500u	.50		4	8	F248	DL16ew
73	MM5054D	64	2	SSS	1.5M	MPG	300mØ	12	5.0	.80	3.5	300n	1.6m	.40		0	7	F227	DL16bg
74	MM5054N	64	2	SSS	1.5M	MPG	300mØ	12	5.0	.80	3.5	300n	1.6m	.40		0	7	F227	DL16bh
75	MC14517AL	64	2	SSS	2.0M	MCX	100uØ♦	0.0	10	.01%	9.99§		900u	.50		5	C	F248	DL16bp
76	M137T1	64	2	SSS	2.0M	MPN	200m	12	5.0	.80	3.5	300n	1.6m	.40		0	7	F304	TO99
77	M137T2	64	2	SSS	2.0M	MPN	200m	12	5.0	.80	3.5	300n	1.6m	.40		5	C	F304	TO99
78	MTS2105	64	2	SSS	2.0M	MPN	300m	12	5.0	.70	3.5	240n				5	C	F95h	TO99
79	GYN131	64	2	SSS	2.0M	MPX	500mØØ	12	5.0	.80	3.5	150n	1.6m	.40		0	6	F229	ML4a
80	S1463	64	2	SSS	2.5M	MPI	300m♦	12	5.0	-10	4.0	165n	1.6m	.40		0	7	F105a	CY2a
81	TMS3103LC	64	2	SSS	2.5M	MPT	360mØ	12	5.0	.80	3.5	150n				2	8	F97	TO100
82	TMS3103NC	64	2	SSS	2.5M	MPT	360mØ	12	5.0	.80	3.5	150n				2	8	F97a	DL16ez
83	HD3214P	64	3	PPD	100k	MPX		14	0.0	-6.5*	-2.0	1.5u			10k	2	7	F185	DL16cg
84	MM4015AD	64	3	SSD	2.5M	MPX	144mØ	12	5.0	.80	3.0	200n	1.6m	.40	10k	5	C	F198	DL16bg
85	MM4018H	64	3	SSD	2.5M	MPX	109mØ	12	5.0	.80	3.0	200n	1.6m	.40	10k	5	C	PN10b	TO100
86	MM5015AD	64	3	SSD	2.5M	MPX	144mØ	12	5.0	.80	3.0	200n	1.6m	.40	10k	0	7	F198	DL16bg
87	MM5018H	64	3	SSD	2.5M	MPX	109mØ	12	5.0	.80	3.0	200n	1.6m	.40	10k	2	7	PN10b	TO100
88	TMS3305LR	64	3	SSD	5.0M	MPT	350mØ	14	0.0	-3.0	-8.0	250n			2.0k	5	8	F99a	TO100
89	uPD358C	64	4	PPS	100k	MXX		24	0.0	-24	0.0	2.0u				2	7	F420	MO001AC
90	3325-9-5F	64	4	PSD	1.0M	MPG	190m	0.0	5.0	.80Ø	4.0	40n	500n△	-15	1.0k	0	7	F72	TO100
91	HD3508	64	4	SSD		MPG	600mØ	5.0	5.0	.80	3.5				10k	2	7	F204a	ML88a
92	MM4105H	64	4	SSD	1.4M	MPX	136mØ	12	5.0	.80	3.5	200n	1.6m	.40	10k	5	C	PN10d	TO100
93	MM5105H	64	4	SSD	1.4M	MPX	136mØ	12	5.0	.80	3.5	200n	1.6m	.40	10k	2	7	PN10d	TO100
94	TMS3121JC	64	4	SSD	2.5M	MPX	355m	12	5.0	.80	3.4	400n	1.6m	.40		2	8	F119	DL16x
95	TMS3121NC	64	4	SSD	2.5M	MPX	355m	12	5.0	.80	3.4	400n	1.6m	.40		2	8	F119	DL16fb
96	MP3417B	64	4	SSD	3.0M	MPT	300mØ	-12	5.0	.80	3.7	100n	1.6m	.40		2	8	F319	ML1d
97	TMS3417JC	64	4	SSD	5.0M	MPX	400m	12	5.0	.80	3.0	160n	1.6m	.40	10k	2	8	F119	DL16k
98	TMS3417NC	64	4	SSD	5.0M	MPX	400m	12	5.0	.80	3.0	160n	1.6m	.40	10k	2	8	F119	DL16ez
99	GZF1106	64	4	SSS	2.0M	MCT	100u♦	0.0	5.0	1.5	3.5	350n	1.6m	.40		4	8	F327	DLØ
100	UC7325#3	64	4	SSS	2.5M	MPX		15	5.0	.60	2.35		1.6m	.40		0	7	F120e	ML19
101	GZF1106P	64	4	SSS	4.0M	MCX	500u♦	0.0	10	3.0	7.0	175n	1.6m	4.75		4	8	F318	DLØ
102	67401AN	64	4	SSS	15M	BTD	750m	0.0	5.0	.80	2.0	45n	8.0m	.50		0	7	F526	DL16dj
103	TL1141G	66	3	MPG	1.0M	SSD	1.0m%	13	0.0	-3.0	-9.0	400n			10k	0	7	F32	CY1b
104	RD13G	66	3	SSD	1.0M		125m†	15	0.0	-3.5Ø	-9.0				1.0k	5	C	F32	TO100
105	RD63G	66	3	SSD	1.0M		125m†Ø	15	0.0	-3.5	-9.0				10k	2	7	F32	TO100
106	CRC1505-1-3	66	3	SSD	1.0M	MPC		14	0.0	-3.0	-9.0				10k	0	7	F136	ML6
107	CRC1505-2-3	66	3	SSD	1.0M	MPC		14	0.0	-3.0	-9.0				10k	0	7	F136	FL5
108	CRC1505-3-3	66	3	SSD	1.0M	MPC		14	0.0	-3.0	-9.0				10k	0	7	F136	TO100
109	DL1-3066	66	3	SSD	1.0M	MPX	150m†	13	0.0	-2.0	-26	25u	500m	2.0	10k	5	8	F146	TO100
110	MC1141G	66	3	SSD	1.0M	MPX	1.0m%†	13	0.0	-3.0	-9.0	400n			10k	0	7	F32	CY1b

SYMBOLS AND CODES EXPLAINED IN INTERPRETER

7. SHIFT REGISTERS

IN ORDER OF(1)No.BITS/REG(2)No.REGISTERS (3)OP.CODE(4)MAX W/C FREQ(5)STRUCT(6)TYPE No

LINE No.	6 TYPE NUMBER	ORGANIZATION 1 BITS PER REGISTER	ORGANIZATION 2 NO REGS	3 OPER. CODE	4 MAX. WORST CASE FREQ. (Hz)	5 STRU-CTURE CODE	MAX. OPER. POWER DISS. (W)	RATED POWER SUPP. SPAN NEG. (V)	RATED POWER SUPP. SPAN POS. (V)	INPUT LOGIC LEVELS MAX. '0' (V)	INPUT LOGIC LEVELS MIN. '1' (V)	MAX. PROP. DELAY (S)	MIN. OUTPUT SINK CURRENT (A)	MIN. OUTPUT SINK CURRENT @ OUT (V)	MIN. CLOCK FREQ. (Hz)	OPER TEMP RNGE CODE -	OPER TEMP RNGE CODE +	DRAWINGS FUNCTIONAL EQUIVALENT NUMBER	DRAWINGS OUTLINE
1	MTS1016	66	3	SSD	2.0M	MPC	120m	2.4	0.0	-7.0	-2.5	250n			10k	2	8	F14j	TO100
2	TMS3304LR	66	3	SSD	5.0M	MPT	350mØ	14	0.0	-3.0	-8.0	250n			2.0k	5	8	F99	TO100
3	M129T1	66	3	SSD	6.0M	MPX	252m	13	0.0	-2.5	-8.0	160n	1.0uΔ	-28	1.0k	0	7	F99	TO100
4	M58209P	68	1	PPD	100k	MXX	150m	14	0.0	-9.0	-3.0	2.0u			10k	1	7	F158	DL16bq
5	GWN105	68	1	SSD	500k	MPX				-10	-2.0		1.5m	23	10k	0	7	F104	TO73
6	uPD192C	72	3	PPD	100k	MPX		0.0	-24	-9.0*	-4.0	2.5u			5.0k	1	7	F484	MO001AC
7	HD3523	72	3	SSD		MPG	600mØ	5.0	5.0	.80	3.5				10k	2	7	F206	ML88a
8	HD3524	72	3	SSD		MPG	600mØ	5.0	5.0	.80	3.5				10k	2	7	F207	ML88a
9	MP220BE	80	1	SSS	1.0M	MPX	300m	24	0.0	-3.5	-10					2	7	F84	ML19d
10	MP220BF	80	1	SSS	1.0M	MPX	300m	24	0.0	-3.5	-10					2	7	F84	FL17
11	DL1-2080	80	2	SSD	2.0M	MPT	200m	12	12	11♦	-12				20k	0	7	F19	DL14a
12	MM4007AAD	80	2	SSD	2.5M	MPX	204mØ	12	5.0	.80	3.0	200n	1.6m	.40	10k	5	C	F332	ML179
13	MM4007AAH	80	2	SSD	2.5M	MPX	204mØ	12	5.0	.80	3.0	200n	1.6m	.40	10k	5	C	F256	TO99
14	MM5007AAD	80	2	SSD	2.5M	MPX	204mØ	12	5.0	.80	3.0	200n	1.6m	.40	10k	0	7	F332	ML179
15	MM5007AAH	80	2	SSD	2.5M	MPX	204mØ	12	5.0	.80	3.0	200n	1.6m	.40	10k	0	7	F256	TO99
16	EA1009	80	2	SSS	1.5M	MPX	450m	14	12	10	3.0	550n				5	8	F14p	TO100
17	MM4052H	80	2	SSS	1.6M	MPX	212mØ	12	5.0	.80	3.0	300n	1.6m	.40		5	8	F71	TO100
18	MM5052H	80	2	SSS	1.6M	MPX	212mØ	12	5.0	.80	3.0	300n	1.6m	.40		0	7	F71	TO100
19	GYN121	80	2	SSS	2.0M	MPX	500mØØ	12	5.0	.80	3.5	150n	1.6m	.40		0	6	F229	ML4a
20	TMS3102LC	80	2	SSS	2.5M	MPT	360mØ	12	5.0	.80	3.5	150n				2	8	F97	TO100
21	TMS3102NC	80	2	SSS	2.5M	MPT	360mØ	12	5.0	.80	3.5	150n				2	8	F97a	DL16ez
22	EA1008	80	2	SSS	3.0M	MPX	300m	14	12	10	3.0	275n				5	8	F14n	TO100
23	MM4021D	80	3	SSD	2.5M	MPX	163mØ	12	5.0	.80	3.0	200n	1.6m	.40	10k	5	C	PN16dc	DLØ
24	MM4021H	80	3	SSD	2.5M	MPX	163mØ	12	5.0	.80	3.0	200n	1.6m	.40	10k	5	C	PN10b	TO100
25	MM4021N	80	3	SSD	2.5M	MPX	163mØ	12	5.0	.80	3.0	200n	1.6m	.40	10k	5	C	PN16dc	ML2e
26	MM5021D	80	3	SSD	2.5M	MPX	163mØ	12	5.0	.80	3.0	200n	1.6m	.40	10k	2	7	PN16dc	DLØ
27	MM5021H	80	3	SSD	2.5M	MPX	163mØ	12	5.0	.80	3.0	200n	1.6m	.40	10k	2	7	PN10b	TO100
28	MM5021N	80	3	SSD	2.5M	MPX	163mØ	12	5.0	.80	3.0	200n	1.6m	.40	10k	2	7	PN16dc	ML2e
29	MC6565L	80	4	PPS	5.0M	MNX	650m	0.0	5.0	.40	3.2§		1.6m	.40		0	7	F247	ML144
30	IM7780CDC	80	4	SSD	2.5M	MPG	355m	12	5.0	.80	3.5	200n	1.6m	.40	10k	0	7	F152	DL16a
31	IM7780CDE	80	4	SSD	2.5M	MPG	355m	12	5.0	.80	3.5	200n	1.6m	.40	10k	0	7	F152	DL16bv
32	IM7780CPE	80	4	SSD	2.5M	MPG	355m	12	5.0	.80	3.5	200n	1.6m	.40	10k	0	7	F152	DL16bv
33	IM7780MDC	80	4	SSD	2.5M	MPG	355m	12	5.0	.80	3.5	200n	1.6m	.40	10k	5	C	F152	DL16a
34	MK1007P	80	4	SSD	2.5M	MPI	220m†	12	5.0	.80	3.5	200n	1.6m	.40	10k	0	7	F152	DL16i
35	MM5023D	80	4	SSD	2.5M	MPI	430mØ	12	5.0	.80	3.5	200n	1.6m	.40	10k	0	7	F334	DL16bg
36	MM5023N	80	4	SSD	2.5M	MPI	430mØ	12	5.0	.80	3.5	200n	1.6m	.40	10k	0	7	F334	DL16bh
37	MM4020D	80	4	SSD	2.5M	MPX	212mØ	12	5.0	.80	3.0	200n	1.6m	.40	10k	5	C	DN16db	DLØ
38	MM4020N	80	4	SSD	2.5M	MPX	212mØ	12	5.0	.80	3.0	200n	1.6m	.40	10k	5	C	DN16db	ML2e
39	MM5020D	80	4	SSD	2.5M	MPX	212mØ	12	5.0	.80	3.0	200n	1.6m	.40	10k	2	7	DN16db	DLØ
40	MM5020N	80	4	SSD	2.5M	MPX	212mØ	12	5.0	.80	3.0	200n	1.6m	.40	10k	2	7	DN16db	ML2e
41	TMS3120JC	80	4	SSD	2.5M	MPX	355m	12	5.0	.80	3.4	400n	1.6m	.40		2	8	F119	DL16x
42	TMS3120NC	80	4	SSD	2.5M	MPX	355m	12	5.0	.80	3.4	400n	1.6m	.40		2	8	F119	DL16fb
43	MP3409B	80	4	SSD	3.0M	MPT	300mØ	-12	5.0	.80	3.7	100n	1.6m	.40		2	8	F319	ML1d
44	TMS3409JC	80	4	SSD	5.0M	MPX	400m	12	5.0	.80	3.0	160n	1.6m	.40	10k	2	8	F119	DL16k
45	TMS3409NC	80	4	SSD	5.0M	MPX	400m	12	5.0	.80	3.0	160n	1.6m	.40	10k	2	8	F119	DL16ez
46	S2182	80	4	SSS	1.0M	MXX	547m	12	5.0	.60%	4.0	500n	1.6m	.60	1.0M	2	8	F300	DL16k
47	2532B	80	4	SSS	1.5M	MPG	640m	12	5.0	.60	3.4	400n	1.6m	.50		0	7	F303	DL16fm
48	2532N	80	4	SSS	1.5M	MPG	640mØ	12	5.0	.60	3.4	400n	1.6	.50		0	7	F303	DL16fm
49	ITT3347	80	4	SSS	2.0M	MPG	450m	12	5.0	.80	4.0	200n	1.6m	.40		0	7	F119	DLØ
50	MCS2109	80	4	SSS	2.0M	MPX	440m	12	5.0	.80	3.5	230n	1.6m	.40		2	8	F239	DLØ
51	S2182A	80	4	SSS	2.0M	MXX	547m	12	5.0	.60%	4.0	350n	1.6m	.60	2.0M	2	8	F300	DL16k
52	2532-1B	80	4	SSS	2.5M	MPG		5.0	0.0									F400	DL16az
53	ITT3357	80	4	SSS	3.0M	MPG	450m	12	5.0	.80	4.0	200n	1.6m	.40		0	7	F119	DLØ
54	TMS3135JC	80	9	SSS	1.5M	MPI	450m	12	5.0	.80	3.6	550n	1.6m	.40		2	8	F328	DL24de
55	TMS3135NC	80	9	SSS	1.5M	MPI	450m	12	5.0	.80	3.6	550n	1.6m	.40		2	8	F328	DL24bw
56	S2183	81	4	SSS	1.0M	MXX	547m	12	5.0	.60%	4.0	500n	1.6m	.60	1.0M	2	8	F300	DL16k
57	S2183A	81	4	SSS	2.0M	MXX	547m	12	5.0	.60%	4.0	350n	1.6m	.60	2.0M	2	8	F300	DL16k
58	TMS3126LC	96	2	SSS	2.5M	MPT	510m	12	5.0	1.1	3.2	250n	1.6m	.40		2	8	F240	TO99
59	TMS3126NC	96	2	SSS	2.5M	MPT	510m	12	5.0	1.1	3.2	250n	1.6m	.40		2	8	F240	ML208
60	MM4007XXD	100	1	SSD	2.5M	MPX	204mØ	12	5.0	.80	3.0	200n	1.6m	.40	10k	5	C	F332	ML179
61	MM4007XXH	100	1	SSD	2.5M	MPX	204mØ	12	5.0	.80	3.0	200n	1.6m	.40	10k	5	C	F256	TO99
62	MM5007XXD	100	1	SSD	2.5M	MPX	204mØ	12	5.0	.80	3.0	200n	1.6m	.40	10k	0	7	F332	ML179
63	MM5007XXH	100	1	SSD	2.5M	MPX	204mØ	12	5.0	.80	3.0	200n	1.6m	.40	10k	0	7	F256	TO99
64	MP225B	100	1	SSS	1.0M	MPX	300m	24	0.0	-3.5	-10					2	7	F86	TO100
65	TL1160G	100	2	MPX	2.0M	SSS	680mØ	15	0.0	-3.0	-9.0	250n				5	8	F34	CY1b
66	MC2380G	100	2	PPS	3.0M	HPG	500m	5.0	5.0	1.0	2.5	100n	1.6m	.20		5	C	F112	CY5
67	MC2381G	100	2	PPS	3.0M	HPG	500m	5.0	5.0	1.0	2.5	100n	1.6m	.20		5	C	F112a	CY5
68	HD3506	100	2	SSD		MPG	600mØ	5.0	5.0	.80	3.5				10k	2	7	F205	ML90a
69	HD3507	100	2	SSD		MPG	600mØ	5.0	5.0	.80	3.5				10k	2	7	F205	ML90a
70	MM406H	100	2	SSD	1.0M	MPX	500mØ	5.0	5.0	2.0	-7.0		1.6m	.40	600	5	C	F54d	TO99
71	MM407H	100	2	SSD	1.0M	MPX	500mØ	5.0	5.0	2.0	-7.0		1.6m	.40	600	5	C	F54e	TO99
72	MM506H	100	2	SSD	1.0M	MPX	500mØ	5.0	5.0	2.0	-7.0		1.6m	.40	600	2	7	F54d	TO99
73	MM507H	100	2	SSD	1.0M	MPX	500mØ	5.0	5.0	2.0	-7.0		1.6m	.40	600	2	7	F54e	TO99
74	MP1406	100	2	SSD	2.0M	BPX	500mØ	5.0	5.0	.80♦	2.5	100n	1.6m	.40	10k	5	C	F11	TO99
75	MP1407	100	2	SSD	2.0M	BPX	500mØ	5.0	.5.0	.80♦	2.5	100n	1.6m	.40	10k	2	7	F11a	TO99
76	MP1506	100	2	SSD	2.0M	BPX	500mØ	5.0	5.0	.80♦	2.5	100n	1.6m	.40	10k	5	C	F11	TO99
77	MP1507	100	2	SSD	2.0M	BPX	500mØ	5.0	5.0	.80♦	2.5	100n	1.6m	.40	10k	2	7	F11a	TO99
78	MTS1001	100	2	SSD	2.0M	MPC	120m	10	0.0	-7.0	-2.0	350n			10k	2	8	F120h	TO99
79	MF1406	100	2	SSD	2.0M	MPG	500mØØ	5.0	5.0	.80	2.5	100n	1.6m	.40	10k	5	C	F11	TO99
80	MF1407	100	2	SSD	2.0M	MPG	500mØØ	5.0	5.0	.80	2.5	100n	1.6m	.40	10k	5	C	F11a	TO99
81	MF1506	100	2	SSD	2.0M	MPG	500mØØ	5.0	5.0	.80	2.5	100n	1.6m	.40	10k	2	7	F11	TO99
82	MF1507	100	2	SSD	2.0M	MPG	500mØØ	5.0	5.0	.80	2.5	100n	1.6m	.40	10k	2	7	F11a	TO99
83	IM7706MTA	100	2	SSD	2.0M	MPX	500mØ	5.0	5.0	2.5♦	.80	250n			250	5	C	F28	TO99
84	IM7707MTA	100	2	SSD	2.0M	MPX	500mØ	5.0	5.0	2.5♦	.80	250n			250	5	C	F28a	TO99
85	TMS3406LR	100	2	SSD	2.5M	MPT	600m	5.0	5.0	.80	3.0	180n	1.6m	.40	10k	5	8	F95f	TO99
86	MM4006AD	100	2	SSD	2.5M	MPX	204mØ	12	5.0	.80	3.0	200n	1.6m	.40	10k	5	C	F332	ML179
87	MM4006AH	100	2	SSD	2.5M	MPX	204mØ	12	5.0	.80	3.0	200n	1.6m	.40	10k	5	C	F256	TO99
88	MM4007D	100	2	SSD	2.5M	MPX	204mØ	12	5.0	.80	3.0	200n	1.6m	.40	10k	5	C	F332	ML179
89	MM4007H	100	2	SSD	2.5M	MPX	204mØ	12	5.0	.80	3.0	200n	1.6m	.40	10k	5	C	F256	TO99
90	MM5006AD	100	2	SSD	2.5M	MPX	204mØ	12	5.0	.80	3.0	200n	1.6m	.40	10k	0	7	F332	ML179
91	MM5006AH	100	2	SSD	2.5M	MPX	204mØ	12	5.0	.80	3.0	200n	1.6m	.40	10k	0	7	F256	TO99
92	MM5007D	100	2	SSD	2.5M	MPX	204mØ	12	5.0	.80	3.0	200n	1.6m	.40	10k	0	7	F332	ML179
93	MM5007H	100	2	SSD	2.5M	MPX	204mØ	12	5.0	.80	3.0	200n	1.6m	.40	10k	0	7	F256	TO99
94	2506T	100	2	SSD	3.0M	MPG	535mØ	5.0	5.0	1.0	3.2	150n			600	0	7	F127	CY4c
95	2506V	100	2	SSD	3.0M	MPG	455mØ	5.0	5.0	1.0	3.2	150n			600	0	7	F127a	DL8a
96	2507T	100	2	SSD	3.0M	MPG	535mØ	5.0	5.0	1.0	3.2	150n			600	0	7	F127	CY4c
97	2507V	100	2	SSD	3.0M	MPG	455mØ	5.0	5.0	1.0	3.2	150n			600	0	7	F127a	DL8a
98	2517T	100	2	SSD	3.0M	MPG	535mØ	5.0	5.0	1.0	3.2	150n			600	0	7	F127	CY4c
99	2517V	100	2	SSD	3.0M	MPG	455mØ	5.0	5.0	1.0	3.2	150n			600	0	7	F127a	DL8a
100	MTS2013	100	2	SSD	3.0M	MPN	200m	5.0	5.0	1.0	4.0	150n			10k	2	8	F120h	TO99
101	2506N	100	2	SSD	3.0M	MPX	455mØ	5.0	5.0	1.0	3.2	150n	1.0uΔ	5.0	600	0	7	F127a	DL8f
102	2507N	100	2	SSD	3.0M	MPX	455mØ	5.0	5.0	1.0	3.2	150n	1.0uΔ	5.0	600	0	7	F127a	DL8f
103	2517N	100	2	SSD	3.0M	MPX	455mØ	5.0	5.0	1.0	3.2	150n	1.0uΔ	5.0	600	0	7	F127a	DL8f
104	IM7706CTA	100	2	SSD	3.0M	MPX	500mØ	5.0	5.0	2.5♦	.80	250n			250	0	7	F28	TO99
105	IM7707CTA	100	2	SSD	3.0M	MPX	500mØ	5.0	5.0	2.5♦	.80	250n			250	0	7	F28a	TO99
106	MM2406	100	2	SSD	5.0M	MPG	500mØØ	5.0	5.0	.80	3.0	75n	1.6m	.50	30	5	C	F71a	TO99
107	MM2407	100	2	SSD	5.0M	MPG	500mØØ	5.0	5.0	.80	3.0	75n	1.6m	.50	30	5	C	F71a	TO99
108	MM3406	100	2	SSD	5.0M	MPG	500mØØ	5.0	5.0	.80	3.0	75n	1.6m	.50	30	0	7	F71a	TO99
109	MM3407	100	2	SSD	5.0M	MPG	500mØØ	5.0	5.0	.80	3.0	75n	1.6m	.50	30	0	7	F71a	TO99
110	3307-9-5F	100	2	SSS	500k	MPX	350mØØ	27	0.0	-2.0	-9.0	450n				0	7	F3b	TO100

SYMBOLS AND CODES EXPLAINED IN INTERPRETER

7. SHIFT REGISTERS

IN ORDER OF(1)No.BITS/REG(2)No.REGISTERS (3)OP.CODE(4)MAX W/C FREQ(5)STRUCT(6)TYPE No

LINE No.	6 TYPE NUMBER	ORGANIZATION 1 BITS PER REGISTER	2 NO REGS	3 OPER. CODE	4 MAX. WORST CASE FREQ. (Hz)	5 STRU-CTURE CODE	MAX. OPER. POWER DISS. (W)	RATED POWER SUPP. SPAN NEG. (V)	POS. (V)	INPUT LOGIC LEVELS MAX. '0' (V)	MIN. '1' (V)	MAX. PROP. DELAY (S)	MIN. OUTPUT SINK CURRENT (A)	@ OUT (V)	MIN. CLOCK FREQ. (Hz)	OPER TEMP RNGE CODE -	+	DRAWINGS FUNCTIONAL EQUIVALENT NUMBER	OUTLINE
1	RC2005K	100	2	SSS	1.0M	MPG		28	0.0	-2.0	-1.0	450n				5	8	F48	CY7
2	MTS1102	100	2	SSS	1.0M	MPN	537mØ	28	0.0	-10	-2.0	400n				5	8	F163	TO100
3	TMS3003LR	100	2	SSS	1.0M	MPT	450mØ	28	0.0	-2.0	-9.0	400n	1.0m	-11		5	8	F95c	TO100
4	M127T1	100	2	SSS	1.0M	MPX	430m	27	0.0	-2.0	-9.0	400n	1.6m	-4.8		0	7	F164	TO100
5	2510A	100	2	SSS	1.5M	MPG	535mØ	5.0	5.0	.60	3.4§	300n	1.6m	.50		0	7	F128	DL14g
6	2510K	100	2	SSS	1.5M	MPG	535mØ	12	5.0	.60	3.4§	500n	1.6m	.50		0	7	F128a	CY7
7	2510N	100	2	SSS	1.5M	MPG	535mØ	12	5.0	.60	3.4	500n	1.6m	.50		0	7	F128	DL14g
8	EA1005	100	2	SSS	1.5M	MPX	450m	14	12	10	3.0	550n				5	8	F14m	TO100
9	MM4053H	100	2	SSS	1.6M	MPX	272mØ	12	5.0	.80	3.0	300n	1.6m	.40		5	8	F71	TO100
10	MM5053H	100	2	SSS	1.6M	MPX	272mØ	12	5.0	.80	3.0	300n	1.6m	.40		0	7	F71	TO100
11	MF7105	100	2	SSS	2.0M	MPG	500mØØ	5.0	5.0	-4.6	-3.0	300n	1.6m	.40		0	7	F143	TO100
12	MCS2102	100	2	SSS	2.0M	MPN	425m	12	5.0	.70	3.5	240n				5	C	F113	DLØ
13	SL7-C2100-30	100	2	SSS	2.0M	MPN	350m†Ø	12	5.0	.80	3.5	200n	1.6m	.40		0	7	F25f	DL14t
14	GYN111	100	2	SSS	2.0M	MPX	500mØØ	12	5.0	.80	3.5	150n	1.6m	.40		0	6	F229	ML4a
15	MC1160G	100	2	SSS	2.0M	MPX	680mØØ	27	0.0	-3.0	-9.0	250n				5	8	F34	CY1b
16	S1670	100	2	SSS	2.5M	MPA	300m♦	12	5.0	.90	3.7	165n	16m	.40		0	7	F105	ML6a
17	TMS3101LC	100	2	SSS	2.5M	MPT	360mØ	12	5.0	.80	3.5	150n				2	8	F97	TO100
18	TMS3101NC	100	2	SSS	2.5M	MPT	360mØ	12	5.0	.80	3.5	150n				2	8	F97a	DL16ez
19	TMS3127LC	100	2	SSS	2.5M	MPT	510m	12	5.0	1.1	3.2	250n	1.6m	.40		2	8	F240	TO99
20	TMS3127NC	100	2	SSS	2.5M	MPT	510m	12	5.0	1.1	3.2	250n	1.6m	.40		2	8	F240	ML208
21	EA1004	100	2	SSS	3.0M	MPX	625m	26	0.0	-1.5	-9.0	275n	20m†	-5.0		5	8	F296	CY11
22	FDN526A	100	2	SSS	3.0M	MPX	625mØ	28	0.0	-9.0	-2.0					5	8	F14k	TO100
23	MC2360G	100	2	SSS	5.0M	MPG	285mØ	0.0	5.0	.40	-1.0	100n				0	7	F34	CY1
24	SCL5171D	100	2	SSS	10M	MCX	5.0m♦	0.0	10	.05%	9.95	130n	190u%	9.5		5	C	F153b	DL16aw
25	SCL5171F	100	2	SSS	10M	MCX	5.0m♦	0.0	10	.05%	9.95	130n	190u%	9.5		5	C	F153a	FL5b
26	SCL5171H	100	2	SSS	10M	MCX	5.0m♦	0.0	10	.05%	9.95	130n	190u%	9.5					CHØ
27	SCL5171T	100	2	SSS	10M	MCX	5.0m♦	0.0	10	.05%	9.95	130n	190u%	9.5		5	C	F153	CY3e
28	MM5061D	100	4	SSS	2.2M	MPG	323mØ	12	5.0	.80	3.5	350n	1.6m	.40		0	7	F340	DL16bg
29	MM5061N	100	4	SSS	2.2M	MPG	323mØ	12	5.0	.80	3.5	350m	1.6m	.40		0	7	F340	DL16bh
30	TMS3137JC	100	9	SSS	1.5M	MPI	450m	12	5.0	.80	3.6	550n	1.6m	.40		2	8	F328	DL24de
31	TMS3137NC	100	9	SSS	1.5M	MPI	450m	12	5.0	.80	3.6	550n	1.6m	.40		2	8	F328	DL24bw
32	TMS3138JC	120	9	SSS	1.5M	MPI	450m	12	5.0	.80	3.6	550n	1.6m	.40		2	8	F328	DL24de
33	TMS3138NC	120	9	SSS	1.5M	MPI	450m	12	5.0	.80	3.6	550n	1.6m	.40		2	8	F328	DL24bw
34	MS625	128	1	SSS	5.0M	MCX	10u♦	0.0	12	2.0	8.0	200n				5	C	F165	CHØ
35	MC14562AL	128	1	SSS	5.6M	MCX	6.0m♦	0.0	10	.05%	9.99	330n	1.1m	.50		5	C	F275	DL14q
36	MC14562CL	128	1	SSS	5.6M	MCX	14m♦	0.0	10	.05%	9.95	660n	600u	.50		4	8	45-62B	DL14q
37	MC14562CP	128	1	SSS	5.6M	MCX	14m♦	0.0	10	.05%	9.95	660n	600u	.50		4	8	45-62B	DL14aq
38	TMS3028LR	128	2	PSS	1.0M	MPT		28	0.0	-2.0	-9.0	700n				5	8	F95d	TO100
39	HD3509	128	2	SSD		MPG	600mØ	5.0	5.0	.80	3.5				10k	2	7	F204b	ML88a
40	MK1002N	128	2	SSS	1.0M	MPI	245m♦	12	5.0	1.0	4.0	450n	1.6m	.40		0	7	F290	DL16ca
41	SL5-2128	128	2	SSS	1.0M	MPN	400m	0.0	5.0	.80	-1.5	450n	1.6m	.40		0	7	F25	
42	SL5-2128-12	128	2	SSS	1.0M	MPN	425m	12	5.0	.80	3.5	400n	1.6m	.40		0	7	F25d	DL8i
43	SL5-2128-16	128	2	SSS	1.0M	MPN	425m	12	5.0	.80	3.5	400n	1.6m	.40		0	7	F25	TO78
44	SL7-2128	128	2	SSS	1.0M	MPN	400m	0.0	5.0	.80	-1.5	450n	1.6m	.40		0	7	F25b	
45	SL7-2128-30	128	2	SSS	1.0M	MPN	425m	12	5.0	.80	3.5	400n	1.6m	.40		0	7	F25b	DL14t
46	TMS3012JC	128	2	SSS	1.0M	MPT	609mØ	28	0.0	-2.0	-9.0	700n				5	8	F113	DL16k
47	TMS3012NC	128	2	SSS	1.0M	MPT	609mØ	28	0.0	-2.0	-9.0	700n				5	8	F113	DL16ez
48	TMS3028LC	128	2	SSS	1.0M	MPT	609mØ	28	0.0	-2.0	-9.0	700n				5	8	F114	TO100
49	2521N	128	2	SSS	1.5M	MPG	535mØ	12	5.0	.60	3.4	350n	1.6m	.50		0	7	F130	DL8f
50	2521V	128	2	SSS	1.5M	MPG	535mØ	12	5.0	.60	3.4	350n	1.6m	.50		0	7	F130	DL8a
51	MM5060AAD	128	2	SSS	1.5M	MPG	442mØ	12	5.0	.80	3.5	350n	1.6m	.40		0	7	F130	DL8h
52	MM5060AAN	128	2	SSS	1.5M	MPG	442mØ	12	5.0	.80	3.5	350n	1.6m	.40		0	7	F130	DL8d
53	MTS2107	128	2	SSS	1.5M	MPN	250m	12	5.0	.70	3.5	250n				5	C	F95h	TO99
54	MF7104	128	2	SSS	2.0M	MPG	500mØØ	5.0	5.0	-4.6	-3.0	300n	1.6m	.40		0	7	F143	TO100
55	MTS2108	128	2	SSS	2.0M	MPN	340m	12	5.0	.70	3.5	240n				5	C	F95h	TO99
56	SL5-C2100-16	128	2	SSS	2.0M	MPN	350m†Ø	12	5.0	.80	3.5	200n	1.6m	.40		0	7	F25	TO78
57	SL5-C2128-12	128	2	SSS	2.0M	MPN	500m†Ø	12	5.0	.80	3.5	300n	1.6m	.40		0	7	F25d	DL8i
58	SL5-C2128-16	128	2	SSS	2.0M	MPN	500m†Ø	12	5.0	.80	3.5	300n	1.6m	.40		0	7	F25	TO78
59	TMS3128LC	128	2	SSS	2.5M	MPT	510m	12	5.0	1.1	3.2	250n	1.6m	.40		2	8	F240	TO99
60	TMS3128NC	128	2	SSS	2.5M	MPT	510m	12	5.0	1.1	3.2	250n	1.6m	.40		2	8	F240	ML208
61	UC7325#2	128	2	SSS	2.5M	MPX		15	5.0	.60	2.35		1.6m	.40		0	7	F120f	TO99
62	MC2361G	128	2	SSS	5.0M	MPG	350mØ	0.0	5.0	.40	4.0	100n				0	7	F34	CY1
63	SCL5172D	128	2	SSS	10M	MCX	5.0m♦	0.0	10	.05%	9.95	130n	190u%	9.5		5	C	F153b	DL16aw
64	SCL5172F	128	2	SSS	10M	MCX	5.0m♦	0.0	10	.05%	9.95	130n	190u%	9.5		5	C	F153a	FL5b
65	SCL5172H	128	2	SSS	10M	MCX	5.0m♦	0.0	10	.05%	9.95	130n	190u%	9.5					CHØ
66	SCL5172T	128	2	SSS	10M	MCX	5.0m♦	0.0	10	.05%	9.95	130n	190u%	9.5		5	C	F153	CY3e
67	SCL5151F	128	4	SSS	1.0M	MCA	300n♦Ø	0.0	10	-2.0Ø	-8.0					5	C	F166	FLØ
68	SCL5151FB	128	4	SSS	1.0M	MCA	10u♦Ø	0.0	10	-2.0Ø	-8.0					5	C	F166	DLØ
69	SL9-4128-28#1	128	4	SSS	2.5M	MPG	200m	5.0	5.0	.80	3.5	340n	1.6m	.50		0	7	F147	DL14t
70	SL9-4128-69#1	128	4	SSS	2.5M	MPG	200m	5.0	5.0	.80	3.5	340n	1.6m	.50		0	7	F147	DL14a
71	SL9-4128-28#2	128	4	SSS	4.0M	MPG	380m	12	5.0	.80	3.5	260n	1.6m	.50		0	7	F147	DL14t
72	SL9-4128-69#2	128	4	SSS	4.0M	MPG	380m	12	5.0	.80	3.5	260n	1.6m	.50		0	7	F147	DL14a
73	SL9-4128-71#1	128	4	SSS	4.0M	MPG	150m†	5.0	0.0	.80	-1.5	160n	1.6m	.40		0	7	F147	DL14a
74	SL9-4128-71#2	128	4	SSS	8.0M	MPG	350m†	12	0.0	.80	-1.5	80n	1.6m	.40		0	7	F147	DL14a
75	NC7030	128	8	SSS*		MNX	180m♦	15	15	15.3	-15		500u	14		0	7	F377	DLØ
76	2522N	132	2	SSS	1.5M	MPG	535mØ	12	5.0	.60	3.4	350n	1.6m	.50		0	7	F130	DL8f
77	2522V	132	2	SSS	1.5M	MPG	535mØ	12	5.0	.60	3.4	350n	1.6m	.50		0	7	F130	DL8a
78	MM5060ABD	132	2	SSS	1.5M	MPG	442mØ	12	5.0	.80	3.5	350n	1.6m	.40		0	7	F130	DL8h
79	MM5060ABN	132	2	SSS	1.5M	MPG	442mØ	12	5.0	.80	3.5	350n	1.6m	.40		0	7	F130	DL8d
80	TMS3129LC	132	2	SSS	2.5M	MPT	510m	12	5.0	1.1	3.2	250n	1.6m	.40		2	8	F240	TO99
81	TMS3129NC	132	2	SSS	2.5M	MPT	510m	12	5.0	1.1	3.2	250n	1.6m	.40		2	8	F240	ML208
82	S2184	132	4	SSS	1.0M	MXX	547m	12	5.0	.60%	4.0	500n	1.6m	.60	1.0M	2	8	F300	DL16k
83	S2184A	132	4	SSS	2.0M	MXX	547m	12	5.0	.60%	4.0	350n	1.6m	.60	2.0M	2	8	F300	DL16k
84	MM5060ACD	133	2	SSS	1.5M	MPG	442mØ	12	5.0	.80	3.5	350n	1.6m	.40		0	7	F130	DL8h
85	MM5060ACN	133	2	SSS	1.5M	MPG	442mØ	12	5.0	.80	3.5	350n	1.6m	.40		0	7	F130	DL8d
86	TMS3113JC	133	2	SSS	2.0M	MPT	360m†	12	5.0	.60	3.5	350n	1.6m	.50		2	8	F115	DL16k
87	TMS3113NC	133	2	SSS	2.0M	MPT	360m†	12	5.0	.60	3.5	350n	1.6m	.50		2	8	F115	DL16ez
88	TMS3130LC	133	2	SSS	2.5M	MPT	510m	12	5.0	1.1	3.2	250n	1.6m	.40		2	8	F240	TO99
89	TMS3130NC	133	2	SSS	2.5M	MPT	510m	12	5.0	1.1	3.2	250n	1.6m	.40		2	8	F240	ML208
90	S2185	133	4	SSS	1.0M	MXX	547m	12	5.0	.60%	4.0	500n	1.6m	.60	1.0M	2	8	F300	DL16k
91	S2185A	133	4	SSS	2.0M	MXX	547m	12	5.0	.60%	4.0	350n	1.6m	.60	2.0M	2	8	F300	DL16k
92	TMS3131LC	136	2	SSS	2.5M	MPT	510m	12	5.0	1.1	3.2	250n	1.6m	.40		2	8	F240	TO99
93	TMS3131NC	136	2	SSS	2.5M	MPT	510m	12	5.0	1.1	3.2	250n	1.6m	.40		2	8	F240	ML208
94	TMS3139JC	140	9	SSS	1.5M	MPI	450m	12	5.0	.80	3.6	550n	1.6m	.40		2	8	F328	DL24de
95	TMS3139NC	140	9	SSS	1.5M	MPI	450m	12	5.0	.80	3.6	550n	1.6m	.40		2	8	F328	DL24bw
96	ITT1144-1C	144	1	SSS	3.0M	MPG	150m	12	5.0	.80	4.0	150n	1.6m	.40		5	C	F188	CY1
97	MM5060ADD	144	2	SSS	1.5M	MPG	442mØ	12	5.0	.80	3.5	350n	1.6m	.40		0	7	F130	DL8h
98	MM5060ADN	144	2	SSS	1.5M	MPG	442mØ	12	5.0	.80	3.5	350n	1.6m	.40		0	7	F130	DL8d
99	MM5060XXD	144	2	SSS	1.5M	MPG	442mØ	12	5.0	.80	3.5	350n	1.6m	.40		0	7	F130	DL8h
100	MM5060XXN	144	2	SSS	1.5M	MPG	442mØ	12	5.0	.80	3.5	350n	1.6m	.40		0	7	F130	DL8d
101	TMS3132LC	144	2	SSS	2.5M	MPT	510m	12	5.0	1.1	3.2	250n	1.6m	.40		2	8	F240	TO99
102	TMS3132NC	144	2	SSS	2.5M	MPT	510m	12	5.0	1.1	3.2	250n	1.6m	.40		2	8	F240	ML208
103	TMS3140JC	160	9	SSS	1.5M	MPI	450m	12	5.0	.80	3.6	550n	1.6m	.40		2	8	F328	DL24de
104	TMS3140NC	160	9	SSS	1.5M	MPI	450m	12	5.0	.80	3.6	550n	1.6m	.40		2	8	F328	DL24bw
105	DL5-1200	200	1	SSD	1.0M	MPT	100m	22	.30	-1.5	-3.7		2.1m	-1.0	10k	0	7	F20	CY3a
106	DL7-1200	200	1	SSD	1.0M	MPT	100m	22	.30	-1.5	-3.7		2.1m	-1.0	10k	0	7	F20	DL14t
107	EA1221	200	1	SSD	1.0M	MPX	300mØ	28	0.0	-2.0	-9.0	300n			10k	5	8	F14g	TO99
108	EA1221D	200	1	SSD	1.0M	MPX	300mØ	28	0.0	-2.0	-9.0	300n			10k	5	8	F14h	ML63
109	FDN206	200	1	SSD	1.0M	MPX	800mØ	28	0.0	-9.0	-2.0	100n			10k	5	8	F14h	TO116
110	FDN206A	200	1	SSD	1.0M	MPX	625mØ	28	0.0	-9.0	-2.0	100n			10k	5	8	F14g	TO99

SYMBOLS AND CODES EXPLAINED IN INTERPRETER

7. SHIFT REGISTERS

IN ORDER OF(1)No.BITS/REG(2)No.REGISTERS (3)OP.CODE(4)MAX W/C FREQ(5)STRUCT(6)TYPE No

LINE No.	6 TYPE NUMBER	ORGANIZATION 1 BITS PER REGISTER	ORGANIZATION 2 NO REGS	3 OPER. CODE	4 MAX. WORST CASE FREQ. (Hz)	5 STRU-CTURE CODE	MAX. OPER. POWER DISS. (W)	RATED POWER SUPP. SPAN NEG. (V)	RATED POWER SUPP. SPAN POS. (V)	INPUT LOGIC LEVELS MAX. '0' (V)	INPUT LOGIC LEVELS MIN. '1' (V)	MAX. PROP. DELAY (S)	MIN. OUTPUT SINK CURRENT (A)	MIN. OUTPUT SINK CURRENT @ OUT (V)	MIN. CLOCK FREQ. (Hz)	OPER TEMP RNGE CODE -	OPER TEMP RNGE CODE +	DRAWINGS FUNCTIONAL EQUIVALENT NUMBER	DRAWINGS OUTLINE
1	MC1142G	200	1	SSD	1.0M	MPX	400m	15	0.0	-3.0	-9.0	500n			10k	0	5	F33	CY5
2	CD4062AK-PR	200	1	SSD	5.0M	MCX	200mØ	0.0	10	.05	9.95	1.0u	6.0m†	.50	1.0k	5	C	F262	MO002AG
3	CD4062AT-PR	200	1	SSD	5.0M	MCX	200mØ	0.0	10	.05	9.95	1.0u	6.0m†	.50	1.0k	5	C	F262	MO006AG
4	2511A	200	2	SSS	1.5M	MPG	535mØ	5.0	5.0	.60	3.4§	300n	1.6m	.50		0	7	F128a	DL14g
5	2511K	200	2	SSS	1.5M	MPG	535mØ	12	5.0	.60	3.4§	500n	1.6m	.50		0	7	F128a	CY7
6	2511N	200	2	SSS	1.5M	MPG	535mØ	12	5.0	.60	3.4	500n	1.6m	.50		0	7	F128	DL14g
7	RD65D	213	2	SSD	2.0M		475mØ	7.0	0.0	-1.5	-5.0				10k	2	7	F42	FL5a
8	RD65G	213	2	SSD	2.0M		450mØ	7.0	0.0	-1.5	-5.0				10k	2	7	F42	CY1
9	RD15D	213	2	SSD	5.0M		475mØ	7.0	0.0	-1.5Ø	-5.0				1.0k	5	C	F42	FL5a
10	RD15G	213	2	SSD	5.0M		450mØ	7.0	0.0	-1.5Ø	-5.0				1.0k	5	C	F42	CY1
11	2527N	240	2	SSS	1.5M	MPG	535mØ	12	5.0	.60	3.4	450n	1.6m	.50		0	7	F130	DL8f
12	2529V	240	2	SSS	1.5M	MPG		5.0	0.0									PN8m	DL8e
13	2528N	250	2	SSS	1.5M	MPG	535mØ	12	5.0	.60	3.4	450n	1.6m	.50		0	7	F130	DL8f
14	2528V	250	2	SSS	1.5M	MPG		5.0	0.0									PN8m	DL8e
15	MC2362G	250	2	SSS	5.0M	MPG	615mØ	0.0	5.0	.40	4.0	100n				0	7	F34	CY1
16	MC2363G	250	2	SSS	5.0M	MPG	615mØ	0.0	5.0	-.40	4.0	100n				0	7	F34	CY1
17	HD3510	256	1	SSD		MPG	600mØ	5.0	5.0	.80	3.5				10k	2	7	F204c	ML90a
18	M58301P	256	1	SSD	100k	MXX	150m	14	0.0	-9.0	-2.5	2.0u			10k	1	7	F162	DL14h
19	EA1205	256	1	SSD	1.0M	MPX	300mØ	28	0.0	-2.0	-9.0	300n			10k	5	8	F14c	TO100
20	EA1205D	256	1	SSD	1.0M	MPX	300mØ	28	0.0	-2.0	-9.0	300n			10k	5	8	FL14d	ML63
21	FDN151A	256	1	SSD	1.0M	MPX	150m	14	0.0	-1.5	-9.0	300n			10k	0	7	F14c	TO100
22	FDN156	256	1	SSD	1.0M	MPX	800mØ	28	0.0	-9.0	2.0	100n			10k	5	8	FL14d	TO116
23	FDN156A	256	1	SSD	1.0M	MPX	625mØ	28	0.0	-9.0	2.0	100n			10k	5	8	F14c	TO100
24	ITT3383-5C	256	1	SSD	2.0M	MPG	155m	12	5.0	.85	4.0	150n	1.6m	.40	10k	0	7	F76	CY1
25	MM4019XXD	256	1	SSD	2.5M	MPX	204mØ	12	5.0	.80	3.0	200n	1.6m	.40	10k	5	C	F332	ML179
26	MM4019XXH	256	1	SSD	2.5M	MPX	204mØ	12	5.0	.80	3.0	200n	1.6m	.40	10k	5	C	F256	TO99
27	MM5019XXD	256	1	SSD	2.5M	MPX	204mØ	12	5.0	.80	3.0	200n	1.6m	.40	10k	0	7	F332	ML179
28	MM5019XXH	256	1	SSD	2.5M	MPX	204mØ	12	5.0	.80	3.0	200n	1.6m	.40	10k	0	7	F256	TO99
29	EA1204	256	1	SSD	3.0M	MPX	300mØ	14	0.0	-1.5	-9.0	70n			10k	5	8	F14a	TO100
30	EA1204D	256	1	SSD	3.0M	MPX	300mØ	14	0.0	-1.5	-9.0	70n			10k	5	8	F14b	ML63
31	FDN141A	256	1	SSD	3.0M	MPX	150m	14	0.0	-1.5	-9.0	100n			10k	0	7	F14a	TO100
32	FDN146	256	1	SSD	3.0M	MPX	800m	28	0.0	-9.0	-1.5	70n			10k	5	8	F14b	TO116
33	FDN146A	256	1	SSD	3.0M	MPX	625mØ	28	0.0	-9.0	-1.5	70n			10k	5	8	F14a	TO100
34	UC7325#1	256	1	SSS	2.5M	MPX		15	5.0	.60	2.35		1.6m	.40		0	7	F120g	TO99
35	SO1	256	1	SSS	20M	MCS	200m†	0.0	15	.80	3.2	50n	1.6m	.80		0	7	F210	ML114
36	DL7-2256	256	2	SSD	1.0M	MPT	200m	12	5.0	.80	3.5	400n	1.6m	.40	10k	0	7	F22	DL14t
37	M125T1	256	2	SSD	1.0M	MPX	160mØ	27	0.0	-2.0	-10	350n	10u	-1.0	10k	0	7	F49	TO100
38	MM4012D	256	2	SSD	2.5M	MPX	272mØ	12	5.0	.80	3.0§	250n	1.6m	.40	10k	5	C	F195	DLØ
39	MM4012N	256	2	SSD	2.5M	MPX	272mØ	12	5.0	.80	3.0§	250n	1.6m	.40	10k	5	C	F195	ML2e
40	MM4019D	256	2	SSD	2.5M	MPX	204mØ	12	5.0	.80	3.0	200n	1.6m	.40	10k	5	C	F332	ML179
41	MM4019H	256	2	SSD	2.5M	MPX	204mØ	12	5.0	.80	3.0	200n	1.6m	.40	10k	5	C	F256	TO99
42	MM5012D	256	2	SSD	2.5M	MPX	272mØ	12	5.0	.80	3.0§	250n	1.6m	.40	10k	2	7	F195	DLØ
43	MM5012N	256	2	SSD	2.5M	MPX	272mØ	12	5.0	.80	3.0§	250n	1.6m	.40	10k	2	7	F195	ML2e
44	MM5019D	256	2	SSD	2.5M	MPX	204mØ	12	5.0	.80	3.0	200n	1.6m	.40	10k	0	7	F332	ML179
45	MM5019H	256	2	SSD	2.5M	MPX	204mØ	12	5.0	.80	3.0	200n	1.6m	.40	10k	0	7	F256	TO99
46	S1705	256	2	SSD	3.0M	MPI	340m†	12	5.0	.90	3.7	100n	1.6m	.40	10k	0	7	F203	ML6a
47	S1723	256	2	SSD	3.0M	MPI	200m♦	12	5.0	.90	3.7	125n	1.6m	.40	10k	0	7	F203a	TO100
48	EA1210	256	2	SSD	3.0M	MPX	625mØ	14	0.0	-1.5	-9.0	275n			10k	5	8	F14e	TO100
49	FDN196A	256	2	SSD	3.0M	MPX	625mØ	28	0.0	-9.0	-2.0	275n			10k	5	8	F14e	TO100
50	FDN166A	256	2	SSD	5.0M	MPX	625mØ	28	0.0	-9.0	-1.0	110n			10k	5	8	F47	TO100
51	ISR9005	256	2	SSS		MXX	5.3	13	13	1.1	2.0	100n						F15	PL6
52	2527V	256	2	SSS	1.5M	MPG	535m	12	5.0	.60	3.4	450n	1.6m	.50		0	7	F130	DL8e
53	SL9-2256-23#1	256	2	SSS	2.5M	MPG	200m	5.0	5.0	.80	3.5	340n	1.6m	.50		0	7	F147b	TO100
54	SL9-2256-28#1	256	2	SSS	2.5M	MPG	200m	5.0	5.0	.80	3.5	340n	1.6m	.50		0	7	F147d	DL14t
55	SL9-2256-69#1	256	2	SSS	2.5M	MPG	200m	5.0	5.0	.80	3.5	340n	1.6m	.50		0	7	F147d	DL14a
56	SL9-2256-21#1	256	2	SSS	4.0M	MPG	150m†	5.0	0.0	.80	-1.5	160n	1.6m	.40		0	7	F147a	TO100
57	SL9-2256-23#2	256	2	SSS	4.0M	MPG	380m	12	5.0	.80	3.5	260n	1.6m	.50		0	7	F147b	TO100
58	SL9-2256-28#2	256	2	SSS	4.0M	MPG	380m	12	5.0	.80	3.5	260n	1.6m	.50		0	7	F147d	DL14t
59	SL9-2256-69#2	256	2	SSS	4.0M	MPG	380m	12	5.0	.80	3.5	260n	1.6m	.50		0	7	F147d	DL14a
60	SL9-2256-21#2	256	2	SSS	8.0M	MPG	350m†	12	0.0	.80	-1.5	80n	1.6m	.40		0	7	F147a	TO100
61	280251E	256	4	PPD	10M	MPG	500m	5.0	5.0	.50	2.4	100n	1.6m	.50		5	C		DLØ
62	280259E	256	4	PPD	10M	MPG	500m	5.0	5.0	.50	2.4	100n	1.6m	.50		0	7		DLØ
63	AM280251E	256	4	PPD	10M	MPG	250m♦	5.0	5.0	-10	-2.0	90n	1.6m	.50	5.0M	5	C	F120b	DL16p
64	AM280251F	256	4	PPD	10M	MPG	250m♦	5.0	5.0	-10	-2.0	90n	1.6m	.50	5.0M	5	C	F120b	FL33a
65	AM280259E#1	256	4	PPD	10M	MPG	250m♦	5.0	5.0	-10	-2.0	90n	1.6m	.50	5.0M	0	7	F120b	DL16p
66	AM280259E#2	256	4	PPD	10M	MPG	200m♦	9.0	5.0	-10	-2.0	110n	1.6m	.50	3.0M	0	7	F120b	DL16p
67	AM280259F#1	256	4	PPD	10M	MPG	250m♦	5.0	5.0	-10	-2.0	90n	1.6m	.50	5.0M	0	7	F120b	FL33a
68	AM280259F#2	256	4	PPD	10M	MPG	200m♦	9.0	5.0	-10	-2.0	110n	1.6m	.50	3.0M	0	7	F120b	FL33a
69	HD3502	256	4	SSD		MPG	600mØ	5.0	5.0	.80	3.5				10k	2	7	F29	ML88a
70	SYC1402A	256	4	SSD	1.5M		1.0 Ø	9.0	5.0	.80	2.0	1.0u	1.6m	.50	1.5M	0	7	PN16da	DL16q
71	SYP1402A	256	4	SSD	1.5M		1.0 Ø	9.0	5.0	.80	2.0	1.0u	1.6m	.50	1.5M	0	7	PN16da	DL16fc
72	DL9-4256-28#1	256	4	SSD	2.5M	MPG	250m	5.0	5.0	.80	3.5	340n	1.6m	.50	10k	0	7	F147	DL14t
73	DL9-4256-69#1	256	4	SSD	2.5M	MPG	250m	5.0	5.0	.80	3.5	340n	1.6m	.50	10k	0	7	F147	DL14a
74	MM1402A	256	4	SSD	2.5M	MPG	600mØØ	5.0	5.0	.80	3.0	90n	1.6m	.50	100	0	7	PN16da	DL16ek
75	1402AB	256	4	SSD	2.5M	MPX		5.0	0.0			10u						PN16da	DL16az
76	1402AI	256	4	SSD	2.5M	MPX		5.0	0.0			10u						PN16da	DL16q
77	DL9-1402A26#2	256	4	SSD	3.0M	MPG	600mØ	9.0	5.0	.80	3.0	110n	1.6m	.50	10k	0	7	F120	DLØ
78	DL9-1402A55#2	256	4	SSD	3.0M	MPG	600mØ	9.0	5.0	.80	3.0	110n	1.6m	.50	10k	0	7	F120	DL16ff
79	M58502P	256	4	SSD	3.0M	MPG	15m†	5.0	5.0	.80	3.5	90n	1.6m	.50	500	1	7	PN16da	DL16do
80	DL9-4256-28#2	256	4	SSD	4.0M	MPG	440m	12	5.0	.80	3.5	260n	1.6m	.50	10k	0	7	F147	DL14t
81	DL9-4256-69#2	256	4	SSD	4.0M	MPG	440m	12	5.0	.80	3.5	260n	1.6m	.50	10k	0	7	F147	DL14a
82	DL9-4256-71#1	256	4	SSD	4.0M	MPG	200m†	5.0	0.0	.80	-1.5	160n	1.6m	.40	5.0k	0	7	F147	DL14a
83	1402	256	4	SSD	5.0M	MPG	600mØØ	5.0	5.0	.80♦	3.3	90n	1.6m	.50	10k	0	8	F29	DL16ek
84	C1402A	256	4	SSD	5.0M	MPG	1.0 Ø	5.0	5.0	.80	3.5	90n	1.6m	.50	10k	0	7	PN16da	DL16ek
85	CM1402	256	4	SSD	5.0M	MPG	350m	5.0	5.0	.80	3.5	90n	1.6m	2.0	330	0	7	PN16da	DLØ
86	CM1402A	256	4	SSD	5.0M	MPG	350m	5.0	5.0	.80	3.5	90n	1.6m	2.0	330	0	7	PN16da	DLØ
87	DL9-1402A26#1	256	4	SSD	5.0M	MPG	525mØ	5.0	5.0	.80	3.0	90n	1.6m	.50	10k	0	7	F120	DLØ
88	DL9-1402A55#1	256	4	SSD	5.0M	MPG	525mØ	5.0	5.0	.80	3.0	90n	1.6m	.50	10k	0	7	F120	DL16ff
89	IM7702CDE	256	4	SSD	5.0M	MPG	600mØØ	5.0	5.0	.80	3.0	90n	1.6m	.50	1.0k	0	8	PN16da	DL16a
90	IM7702MDE	256	4	SSD	5.0M	MPG	600mØØ	5.0	5.0	.80	3.5	90n	1.6m	.50	1.0k	5	C	PN16da	DL16a
91	M141D1	256	4	SSD	5.0M	MPG		5.0	5.0	.80	3.3	60n	1.6m	.50	100	0	7	F29	DL16j
92	MF1402A	256	4	SSD	5.0M	MPG	600mØØ	5.0	5.0	.80	3.0	110n	1.6m	.50	10k	0	8	F29	DL16ek
93	MM1402AD	256	4	SSD	5.0M	MPG	600mØØ	5.0	5.0	.80	3.3	90n	1.6m	.50	10k	0	7	PN16da	DL16bg
94	MM1402AN	256	4	SSD	5.0M	MPG	600mØØ	5.0	5.0	.80	3.3	90n	1.6m	.50	10k	0	7	PN16da	DL16bh
95	P1402A	256	4	SSD	5.0M	MPG	500m	5.0	5.0	.80	3.0	90n	1.6m	.50	10k	0	7	PN16da	ML2d
96	MP1402	256	4	SSD	5.0M	MPX	600mØ	5.0	5.0	.80♦	3.3	90n	1.6m	.50	10k	5	8	F29	DL16ek
97	TMS3412JC	256	4	SSD	6.0M	MPG	600mØ	5.0	5.0	.80	3.3	80n	1.6m	.50	10k	2	8	F120	DL16ez
98	TMS3412NC	256	4	SSD	6.0M	MPG	600mØ	5.0	5.0	.80	3.3	80n	1.6m	.50	10k	2	8	F120	DL16k
99	2502B	256	4	SSD	8.0M	MPG	640mØ	5.0	5.0	.60	3.4	90n			500	0	7	F29	DL16az
100	2502I	256	4	SSD	8.0M	MPG	640mØ	5.0	5.0	.60	3.4	90n			500	0	7	F29	ML171
101	DL9-4256-71#2	256	4	SSD	8.0M	MPG	400m†	12	0.0	.80	-1.5	80n	1.6m	.40	5.0k	0	7	F147	DL14a
102	2502N	256	4	SSD	8.0M	MPX	640mØ	5.0	5.0	1.05	3.2	90n	1.0u△	0.0	500	0	7	PN16da	DL16fm
103	SYC2802A	256	4	SSD	10M	MNI	1.0 Ø	0.0	5.0	.80	3.0	1.0u	1.6m	.50		0	7	PN16da	DLØ
104	SYP2802A	256	4	SSD	10M	MNI	1.0 Ø	0.0	5.0	.80	3.0	1.0u	1.6m	.50		0	7	PN16da	DLØ
105	MM2402	256	4	SSD	10M	MPG	500mØØ	5.0	5.0	.80	3.0	90n	1.6m	.50	30	5	C	PN16da	DL16ek
106	MM3402	256	4	SSD	10M	MPG	500mØØ	5.0	5.0	.80	3.0	90n	1.6m	.50	30	0	7	PN16da	DL16ek
107	MM5056N	256	4	SSS	1.0M	MPG	163mØ	12	5.0	.80	3.5	345n	1.6m	.40		0	7	F340a	ML203
108	C2416	256	64	SSC		MNG	1.0 Ø	5.0	12	.80%	3.5	40n	3.0m	.45		0	7	F325	DL22c
109	S1724	257	1	SSD	1.0M	MPI	238m	12	5.0	-10	4.0	250n	1.6m	.40	10k	0	7	F208	ML6a
110	MD6703AC	288	1	SSS	20M	MCX	10m	0.0	10	1.5	3.5		1.0m♦			4	8	F548	DLØ

SYMBOLS AND CODES EXPLAINED IN INTERPRETER

7. SHIFT REGISTERS

IN ORDER OF(1)No.BITS/REG(2)No.REGISTERS (3)OP.CODE(4)MAX W/C FREQ(5)STRUCT(6)TYPE No

LINE No.	6 TYPE NUMBER	ORGANIZATION 1 BITS PER REGISTER	2 NO REGS	3 OPER. CODE	4 MAX. WORST CASE FREQ. (Hz)	5 STRU-CTURE CODE	MAX. OPER. POWER DISS. (W)	RATED POWER SUPP. SPAN NEG. (V)	POS. (V)	INPUT LOGIC LEVELS MAX. '0' (V)	MIN. '1' (V)	MAX. PROP. DELAY (S)	MIN. OUTPUT SINK CURRENT (A)	@ OUT (V)	MIN. CLOCK FREQ. (Hz)	OPER TEMP RNGE CODE -	+	DRAWINGS FUNCTIONAL EQUIVALENT NUMBER	OUTLINE
1	MD6703AE	288	1	SSS	20M	MCX	10m	0.0	10	1.5	3.5		1.0m♦			4	8	F548	DL∅
2	MD6703AF	288	1	SSS	20M	MCX	10m	0.0	10	1.5	3.5		1.0m♦			5	C	F548	DL∅
3	MM4104H	360	1	SSD	2.5M	MPX	170mØ	12	5.0	.80	3.0	200n	1.6m	.40	10k	5	C	PN10c	TO100
4	MM5104H	360	1	SSD	2.5M	MPX	170mØ	12	5.0	.80	3.0	200n	1.6m	.40	10k	2	7	PN10c	TO100
5	ITT3330-5C	480	1	SSD	2.0M	MPG	250m	12	5.0	.85	4.0	150n	1.6m	.40	10k	0	7	F74	CY1
6	S1685	480	2	SSD	1.0M	MPA	170m	12	5.0	-11	4.2	200n	1.6m	.40	15k	0	7	F44	CY6
7	SYC2535	480	2	SSS	2.0M	MNI	600m∅	0.0	5.0	.80	2.0	300n	1.6m	.40		0	7	F502	DL∅
8	SYP2535	480	2	SSS	2.0M	MNI	600m∅	0.0	5.0	.80	2.0	300n	1.6m	.40		0	7	F502	DL∅
9	SYT2535	480	2	SSS	2.0M	MNI	600m∅	0.0	5.0	.80	2.0	300n	1.6m	.40		0	7	F502a	DL∅
10	SYC2535A	480	2	SSS	3.5M	MNI	600m∅	0.0	5.0	.80	2.0	200n	1.6m	.40		0	7	F502	DL∅
11	SYP2535A	480	2	SSS	3.5M	MNI	600m∅	0.0	5.0	.80	2.0	200n	1.6m	.40		0	7	F502	DL∅
12	SYT2535A	480	2	SSS	3.5M	MNI	600m∅	0.0	5.0	.80	2.0	200n	1.6m	.40		0	7	F502a	DL∅
13	ITT3331-5C	500	1	SSD	2.0M	MPG	250m	12	5.0	.85	4.0	150n	1.6m	.40	10k	0	7	F74	CY1
14	TMS3402LC	500	1	SSD	5.0M	MPT	350m†	12	5.0	.80	3.0	50n	1.6m	.40	1.0k	2	8	F102	TO100
15	TMS3402NC	500	1	SSD	5.0M	MPT	350m†	12	5.0	.80	3.0	50n	1.6m	.40	1.0k	2	8	F117	DL16k
16	HD3505	512	1	SSD		MPG	600m∅	5.0	5.0	.80	3.5				10k	2	7	F204	ML88a
17	HD3220P	512	1	SSD		MPX		14	0.0	-6.5*	-2.0	1.5u			10k	2	7	F199	DL16cg
18	DL5-1512	512	1	SSD	1.0M	MPT	200m	12	5.0	.80	3.5	400n	1.6m	.40	10k	0	7	F21	CY1a
19	DL7-1512	512	1	SSD	1.0M	MPT	200m	12	5.0	.80	3.5	400n	1.6m	.40	10k	0	7	F21	DL14t
20	1405	512	1	SSD	2.0M	MPG	400mØ	5.0	5.0	.80♦	3.0	250n	1.6m	.50	10k	5	8	F30	TO100
21	ITT3329-5C	512	1	SSD	2.0M	MPG	250m	12	5.0	.85	4.0	150n	1.6m	.40	10k	0	7	F189	CY1
22	M1405A	512	1	SSD	2.0M	MPG	400m	5.0	5.0	.80	3.5	250n	1.6m	.50	10k	0	7	F30	CY7a
23	MF1405	512	1	SSD	2.0M	MPG	500mØ∅	5.0	5.0	.80	3.0	250n	1.6m	.50	200	5	8	F30	TO100
24	MP1405	512	1	SSD	2.0M	MPG	500m∅	5.0	5.0	.80♦	3.0	250n	1.6m	.50	10k	5	8	F30	TO100
25	1405K	512	1	SSD	2.0M	MPX		5.0	0.0			30u						F401	CY7c
26	MM4016D	512	1	SSD	2.5M	MPX	170mØ	12	5.0	.80	3.0	200n	1.6m	.40	10k	5	C	F223	DL16bg
27	MM4016H	512	1	SSD	2.5M	MPX	170mØ	12	5.0	.80	3.0	200n	1.6m	.40	10k	5	C	F65	TO100
28	MM5016D	512	1	SSD	2.5M	MPX	170mØ	12	5.0	.80	3.0	200n	1.6m	.40	10k	0	7	F223	DL16bg
29	MM5016H	512	1	SSD	2.5M	MPX	170mØ	12	5.0	.80	3.0	200n	1.6m	.40	10k	0	7	F65	TO100
30	MM5016N	512	1	SSD	2.5M	MPX	170mØ	12	5.0	.80	3.0	200n	1.6m	.40	10k	0	7	PN8i	DL8d
31	2524V	512	1	SSD	3.0M	MPG	535m∅	5.0	5.0	.60	3.4	100n	1.6m	.50	500	0	7	F131	DL8a
32	EA1212	512	1	SSD	3.0M	MPX	625m∅	14	0.0	-1.5	-9.0	275n			10k	5	8	F14f	TO100
33	FDN216A	512	1	SSD	3.0M	MPX	625m∅	28	0.0	-9.0	-2.0				10k	5	8	F14f	TO100
34	MM2405	512	1	SSD	4.0M	MPG	500m∅Ø	5.0	5.0	.80	3.0	100n	1.6m	.50	30	5	C	F30	TO100
35	MM3405	512	1	SSD	4.0M	MPG	500m∅Ø	5.0	5.0	.80	3.0	100n	1.6m	.50	30	0	7	F30	TO100
36	MTS2100	512	1	SSD	5.0M	MPN	300m	5.0	5.0	1.0	3.5	80n			10k	2	8	F120k	TO100
37	EA1206	512	1	SSD	5.0M	MPX	350u%	27	0.0	-1.0	-9.0	300n			5.0k	5	8	F18	TO100
38	TMS3401LC	512	1	SSD	5.0M	MPX	350m†	12	5.0	.80	3.5	50n	1.6m	.40	20k	2	8	F102	TO100
39	TMS3401NC	512	1	SSD	5.0M	MPX	350m†	12	5.0	.80	3.0	50n	1.6m	.40	1.0k	2	8	F117	DL16k
40	SL9-1512-23#1	512	1	SSS	2.5M	MPG	200m	5.0	5.0	.80	3.5	340n	1.6m	.50		0	7	F147a	TO100
41	SL9-1512-28#1	512	1	SSS	2.5M	MPG	200m	5.0	5.0	.80	3.5	340n	1.6m	.50		0	7	F147c	DL14t
42	SL9-1512-69#1	512	1	SSS	2.5M	MPG	200m	5.0	5.0	.80	3.5	340n	1.6m	.50		0	7	F147c	DL14a
43	SL9-1512-21#1	512	1	SSS	4.0M	MPG	150m†	5.0	0.0	.80	-1.5	160n	1.6m	.40		0	7	F147b	TO100
44	SL9-1512-23#2	512	1	SSS	4.0M	MPG	380m	12	5.0	.80	3.5	260n	1.6m	.50		0	7	F147a	TO100
45	SL9-1512-28#2	512	1	SSS	4.0M	MPG	380m	12	5.0	.80	3.5	260n	1.6m	.50		0	7	F147c	DL14t
46	SL9-1512-69#2	512	1	SSS	4.0M	MPG	380m	12	5.0	.80	3.5	260n	1.6m	.50		0	7	F147c	DL14a
47	SL9-1512-21#2	512	1	SSS	8.0M	MPG	350m†	12	0.0	.80	-1.5	80n	1.6m	.40		0	7	F147b	TO100
48	280351E	512	2	PPD	10M	MPG	500m	5.0	5.0	.50	2.4	100n	1.6m	.50		5	C		CY∅
49	280359E	512	2	PPD	10M	MPG	500m	5.0	5.0	.50	2.4	100n	1.6m	.50		0	7		CY∅
50	AM280351F	512	2	PPD	10M	MPG	250m♦	5.0	5.0	-10	-2.0	90n	1.6m	.50	5.0M	5	C	F120a	FL33a
51	AM280351T	512	2	PPD	10M	MPG	250m♦	5.0	5.0	-10	-2.0	90n	1.6m	.50	5.0M	5	C	F120a	TO99
52	AM280359F#1	512	2	PPD	10M	MPG	250m♦	5.0	5.0	-10	-2.0	90n	1.6m	.50	5.0M	0	7	F120a	FL33a
53	AM280359F#2	512	2	PPD	10M	MPG	200m♦	9.0	5.0	-10	-2.0	110n	1.6m	.50	3.0M	0	7	F120a	FL33a
54	AM280359T#1	512	2	PPD	10M	MPG	250m♦	5.0	5.0	-10	-2.0	90n	1.6m	.50	5.0M	0	7	F120a	TO99
55	AM280359T#2	512	2	PPD	10M	MPG	200m♦	9.0	5.0	-10	-2.0	110n	1.6m	.50	3.0M	0	7	F120a	TO99
56	HD3503	512	2	SSD		MPG	600m∅	5.0	5.0	.80	3.5				10k	2	7	F29a	ML90a
57	SYM1403A	512	2	SSD	1.5M		1.0 ∅	9.0	5.0	.80	2.0	1.0u	1.6m	.50	1.5M	0	7	PN8d	CY4f
58	SYP1403A	512	2	SSD	1.5M		1.0 ∅	9.0	5.0	.80	2.0	1.0u	1.6m	.50	1.5M	0	7	PN8j	ML116a
59	MM1405A	512	2	SSD	2.0M	MPG	600m∅Ø	5.0	5.0	.80	3.0	250n	1.6m	.50	200	0	7	F30	TO100
60	S1701	512	2	SSD	2.5M	MPA	600m♦	12	5.0	.90	3.7	150n	1.6m	.40	10k	0	7	F202	ML6a
61	DL9-2512-23#1	512	2	SSD	2.5M	MPG	250m	5.0	5.0	.80	3.5	340n	1.6m	.50	10k	0	7	F147b	TO100
62	DL9-2512-28#1	512	2	SSD	2.5M	MPG	250m	5.0	5.0	.80	3.5	340n	1.6m	.50	10k	0	7	F147d	DL14t
63	DL9-2512-69#1	512	2	SSD	2.5M	MPG	250m	5.0	5.0	.80	3.5	340n	1.6m	.50	10k	0	7	F147d	DL14a
64	MM1403A	512	2	SSD	2.5M	MPG	600m∅Ø	5.0	5.0	.80	3.0	90n	1.6m	.50	100	0	7	PN8d	TO99
65	1403ATA	512	2	SSD	2.5M	MPX		5.0	0.0			10u						PN8d	CY4c
66	1403AV	512	2	SSD	2.5M	MPX		5.0	0.0			10u						PN8d	DL8e
67	MM4017D	512	2	SSD	2.5M	MPX	238mØ	12	5.0	.80	3.0	200n	1.6m	.40	10k	5	C	F225	DL16bg
68	MM4017H	512	2	SSD	2.5M	MPX	238mØ	12	5.0	.80	3.0	200n	1.6m	.40	10k	5	C	F333	TO100
69	MM5017D	512	2	SSD	2.5M	MPX	238mØ	12	5.0	.80	3.0	200n	1.6m	.40	10k	0	7	F225	DL16bg
70	MM5017H	512	2	SSD	2.5M	MPX	238mØ	12	5.0	.80	3.0	200n	1.6m	.40	10k	0	7	F333	TO100
71	MM5017N	512	2	SSD	2.5M	MPX	238mØ	12	5.0	.80	3.0	200n	1.6m	.40	10k	0	7	F225	DL16bh
72	DL9-1403A15#2	512	2	SSD	3.0M	MPG	600mØ	9.0	5.0	.80	3.0	110n	1.6m	.50	10k	0	7	F120a	TO99
73	DL9-1403A26#2	512	2	SSD	3.0M	MPG	600mØ	9.0	5.0	.80	3.0	110n	1.6m	.50	10k	0	7	F120c	DL∅
74	DL9-1403A55#2	512	2	SSD	3.0M	MPG	600mØ	9.0	5.0	.80	3.0	110n	1.6m	.50	10k	0	7	F120c	DL16ff
75	M58503P	512	2	SSD	3.0M	MPG	15m†	5.0	5.0	.80	3.5	90n	1.6m	.50	500	1	7	PN16dg	DL16do
76	DL9-2512-21#1	512	2	SSD	4.0M	MPG	200m†	5.0	0.0	.80	-1.5	160n	1.6m	.40	5.0k	0	7	F147a	TO100
77	DL9-2512-23#2	512	2	SSD	4.0M	MPG	440m	12	5.0	.80	3.5	260n	1.6m	.50	10k	0	7	F147b	TO100
78	DL9-2512-28#2	512	2	SSD	4.0M	MPG	440m	12	5.0	.80	3.5	260n	1.6m	.50	10k	0	7	F147d	DL14t
79	DL9-2512-69#2	512	2	SSD	4.0M	MPG	440m	12	5.0	.80	3.5	260n	1.6m	.50	10k	0	7	F147d	DL14a
80	1403	512	2	SSD	5.0M	MPG	600mØ∅	5.0	5.0	.80♦	3.3	90n	1.6m	.50	10k	0	8	F29a	TO99
81	CM1403	512	2	SSD	5.0M	MPG	350m	5.0	5.0	.80	3.5	90n	1.6m	2.0	330	0	7	PN8d	CL∅
82	CM1403A	512	2	SSD	5.0M	MPG	350m	5.0	5.0	.80	3.5	90n	1.6	2.0	330	0	7	PN8d	CL∅
83	DL9-1403A15#1	512	2	SSD	5.0M	MPG	525mØ	5.0	5.0	.80	3.0	90n	1.6m	.50	10k	0	7	F120a	TO99
84	DL9-1403A26#1	512	2	SSD	5.0M	MPG	525mØ	5.0	5.0	.80	3.0	90n	1.6m	.50	10k	0	7	F120c	DL∅
85	DL9-1403A55#1	512	2	SSD	5.0M	MPG	525mØ	5.0	5.0	.80	3.0	90n	1.6m	.50	10k	0	7	F120c	DL16ff
86	IM7703#1	512	2	SSD	5.0M	MPG	250mØ♦	5.0	5.0	.80	3.3	90m	1.0u∆		250	5	8	PN8d	TO99
87	IM7703#2	512	2	SSD	5.0M	MPG	250mØ♦	5.0	5.0	.80	3.3	90n	1.0u∆		250	5	8	PN8d	ML90
88	IM7703CMD	512	2	SSD	5.0M	MPG	600m∅Ø	5.0	5.0	.80	3.0	90n	1.6m	.50	1.0k	0	8	PN8d	ML90
89	IM7703CTV	512	2	SSD	5.0M	MPG	600m∅Ø	5.0	5.0	.80	3.0	90n	1.6m	.50	1.0k	0	8	PN8d	TO99
90	M136T1	512	2	SSD	5.0M	MPG		5.0	5.0	.80	3.3	60n	1.6m	.50	100	0	7	F29a	TO99
91	M1403A	512	2	SSD	5.0M	MPG	500m	5.0	5.0	.80	3.5	90n	1.6m	.50	10k	0	7	PN8d	CY4f
92	MF1403A	512	2	SSD	5.0M	MPG	600mØ∅	5.0	5.0	.80	3.0	110n	1.6m	.50	10k	0	8	F29a	TO99
93	MF1403A#1	512	2	SSD	5.0M	MPG	600mØ∅	5.0	5.0	.80	3.0	110n	1.6m	.50	10k	0	8	F29a	TO99
94	MF1403A#2	512	2	SSD	5.0M	MPG	1.0 ∅	5.0	5.0	.80	3.0	90n	1.6m	.50	10k	0	7	F29a	DL8a
95	MM1403AH	512	2	SSD	5.0M	MPG	600mØ∅	5.0	5.0	.80	3.3	90n	1.6m	.50	10k	0	7	PN8d	TO99
96	MM1403AN	512	2	SSD	5.0M	MPG	600mØ∅	5.0	5.0	.80	3.3	90n	1.6m	.50	10k	0	7	PN8j	DL8d
97	P1403A	512	2	SSD	5.0M	MPG	500m	5.0	5.0	.80	3.0	90n	1.6m	.50	10k	0	7	PN8j	ML116a
98	TMS3309JC	512	2	SSD	5.0M	MPT	90u%†	24	0.0	-3.5	-9.0				10k	2	8	F100	ML43a
99	TMS3404JC	512	2	SSD	5.0M	MPT		12	5.0	.80	3.4	100n			10k	2	8	F118	DL16k
100	TMS3404NC	512	2	SSD	5.0M	MPT		12	5.0	.80	3.4	100n			10k	2	8	F118	DL16ez
101	MP1403	512	2	SSD	5.0M	MPX	600m∅	5.0	5.0	.80♦	3.3	90n	1.6m	.50	10k	5	8	F29a	TO99
102	TMS3413LC	512	2	SSD	6.0M	MPG	600mØ	5.0	5.0	.80	3.3	80n	1.6m	.50	10k	2	8	F120a	TO99
103	TMS3413NC	512	2	SSD	6.0M	MPG	600mØ	5.0	5.0	.80	3.3	80n	1.6m	.50	10k	2	8	F120c	DL16ez
104	2503TA	512	2	SSD	8.0M	MPG	535m∅	5.0	5.0	1.05	3.2	90n	1.0u∆	0.0	500	0	7	F29a	CY4d
105	DL9-2512-21#2	512	2	SSD	8.0M	MPG	400m†	12	0.0	.80	-1.5	80n	1.6m	.40	5.0k	0	7	F147a	TO100
106	2503N	512	2	SSD	8.0M	MPX	535m∅	5.0	5.0	1.05	3.2	90n	1.0u∆	0.0	500	0	7	F547a	DL8f
107	SYM2803A	512	2	SSD	10M	MNI	1.0 ∅	0.0	5.0	.80	3.0	1.0u	1.6m	.50		0	7	PN16da	DL∅
108	SYP2803A	512	2	SSD	10M	MNI	1.0 ∅	0.0	5.0	.80	3.0	1.0u	1.6m	.50		0	7	PN16da	DL∅
109	MM2403	512	2	SSD	10M	MPG	500m∅Ø	5.0	5.0	.80	3.0	90n	1.6m	.50	30	5	C	PN8d	TO99
110	MM3403	512	2	SSD	10M	MPG	500m∅Ø	5.0	5.0	.80	3.0	90n	1.6m	.50	30	0	7	PN8d	TO99

SYMBOLS AND CODES EXPLAINED IN INTERPRETER

7. SHIFT REGISTERS

IN ORDER OF(1)No.BITS/REG(2)No.REGISTERS (3)OP.CODE(4)MAX W/C FREQ(5)STRUCT(6)TYPE No

LINE No.	6 TYPE NUMBER	ORGANIZATION 1 BITS PER REGISTER	ORGANIZATION 2 NO REGS	3 OPER. CODE	4 MAX. WORST CASE FREQ. (Hz)	5 STRU-CTURE CODE	MAX. OPER. POWER DISS. (W)	RATED POWER SUPP. SPAN NEG. (V)	RATED POWER SUPP. SPAN POS. (V)	INPUT LOGIC LEVELS MAX. '0' (V)	INPUT LOGIC LEVELS MIN. '1' (V)	MAX. PROP. DELAY (S)	MIN. OUTPUT SINK CURRENT (A)	MIN. OUTPUT SINK CURRENT @ OUT (V)	MIN. CLOCK FREQ. (Hz)	OPER TEMP RNGE CODE -	OPER TEMP RNGE CODE +	DRAWINGS FUNCTIONAL EQUIVALENT NUMBER	DRAWINGS OUTLINE
1	SYC2534	512	2	SSS	2.0M	MNI	600mØ	0.0	5.0	.80	2.0	300n	1.6m	.40		0	7	F502	DLØ
2	SYP2534	512	2	SSS	2.0M	MNI	600mØ	0.0	5.0	.80	2.0	300n	1.6m	.40		0	7	F502	DLØ
3	SYT2534	512	2	SSS	2.0M	MNI	600mØ	0.0	5.0	.80	2.0	300n	1.6m	.40		0	7	F502a	DLØ
4	SYC2534A	512	2	SSS	3.5M	MNI	600mØ	0.0	5.0	.80	2.0	200n	1.6m	.40		0	7	F502	DLØ
5	SYP2534A	512	2	SSS	3.5M	MNI	600mØ	0.0	5.0	.80	2.0	200n	1.6m	.40		0	7	F502	DLØ
6	SYT2534A	512	2	SSS	3.5M	MNI	600mØ	0.0	5.0	.80	2.0	200n	1.6m	.40		0	7	F502a	DLØ
7	MF7111A	512	4	SSD	2.0M	MNG	800m	0.0	5.0	.80	2.0	200n	4.0m	.40	10k	0	7		ML2a
8	MF7111	512	4	SSD	8.0M	MNG	800m	1.25	5.0	.80	2.0	200n	4.0m	.40	1.0k	0	7		ML2a
9	WD5869J	640	2	SSD	2.0M	MPX	800mØØ	12	5.0	.80	3.3	200n				6	E		DL16fx
10	WD5869K	640	2	SSD	2.0M	MPX	800mØØ	12	5.0	.80	3.3	200n				5	C		DL16fy
11	CM4500-01	1024	1	D	5.0M	MPG	400m	5.0	5.0	.80	3.0	100n	6.0m	0.0	500	0	8		
12	280451E	1024	1	PPD	10M	MPG	500m	5.0	5.0	.50	2.4	100n	1.6m	.50		5	C		CYØ
13	280459E	1024	1	PPD	10M	MPG	500m	5.0	5.0	.50	2.4	100n	1.6m	.50		0	7		CYØ
14	HD3504	1024	1	SSD		MPG	600mØ	5.0	5.0	.80	3.5				10k	2	7	F29b	ML90a
15	C2405	1024	1	SSD	1.0M	MNG	1.0 Ø	0.0	5.0	.65	2.2		5.0m	.45		0	7	F106a	DL16ek
16	P2405	1024	1	SSD	1.0M	MNG	350m	0.0	5.0	.65	2.2	500n	5.0m	.45	25k	0	7	F106	ML2d
17	CRC1501-1-2	1024	1	SSD	1.0M	MPC	300m†	12	0.0	-2.0	-9.0				10k	2	8	F135	ML6
18	CRC1501-2-2	1024	1	SSD	1.0M	MPC	300m†	12	0.0	-2.0	-9.0				10k	2	8	F135	FL5
19	SYM1404A	1024	1	SSD	1.5M		1.0 Ø	9.0	5.0	.80	2.0	1.0u	1.6m	.50	1.5M	0	7	PN8e	CY4f
20	SYP1404A	1024	1	SSD	1.5M		1.0 Ø	9.0	5.0	.80	2.0	1.0u	1.6m	.50	1.5M	0	7	PN8k	ML116a
21	S1687	1024	1	SSD	2.0M	MPA	200m♦	12	5.0	.90	3.7	200n	1.6m	.40	10k	0	7	F201	CY6
22	MM1412A	1024	1	SSD	2.0M	MPG	600mØØ	5.0	5.0	.80	3.0	250n	1.6m	.50	200	0	7	F30a	TO100
23	2512K	1024	1	SSD	2.5M	MPG	535mØ	5.0	5.0	.60	3.4	100n			500	0	7	F30a	CY7
24	DL9-1024-23#1	1024	1	SSD	2.5M	MPG	250m	5.0	5.0	.80	3.5	340n	1.6m	.50	10k	0	7	F147a	TO100
25	DL9-1024-28#1	1024	1	SSD	2.5M	MPG	250m	5.0	5.0	.80	3.5	340n	1.6m	.50	10k	0	7	F147c	DL14t
26	DL9-1024-69#1	1024	1	SSD	2.5M	MPG	250m	5.0	5.0	.80	3.5	340n	1.6m	.50	10k	0	7	F147c	DL14a
27	MM1404A	1024	1	SSD	2.5M	MPG	600mØØ	5.0	5.0	.80	3.0	90n	1.6m	.50	100	0	7	PN8e	TO99
28	1404ATA	1024	1	SSD	2.5M	MPX		5.0	0.0			10u						PN8e	CY4c
29	1404AV	1024	1	SSD	2.5M	MPX		5.0	0.0			10u						PN8k	DL8e
30	MM4013D	1024	1	SSD	2.5M	MPX	255mØ	12	5.0	.80	3.0§	200n	1.6m	.40	10k	5	C	F197	DL8h
31	MM4013H	1024	1	SSD	2.5M	MPX	255mØ	12	5.0	.80	3.0§	200n	1.6m	.40	10k	5	C	F196	TO100
32	MM5013D	1024	1	SSD	2.5M	MPX	255mØ	12	5.0	.80	3.0§	200n	1.6m	.40	10k	0	7	F197	DL8h
33	MM5013H	1024	1	SSD	2.5M	MPX	255mØ	12	5.0	.80	3.0§	200n	1.6m	.40	10k	0	7	F196	TO100
34	MM5013N	1024	1	SSD	2.5M	MPX	255mØ	12	5.0	.80	3.0§	200n	1.6m	.40	10k	0	7	F197	DL8d
35	2525V	1024	1	SSD	3.0M	MPG	535mØ	5.0	5.0	.60	3.4	100n	1.6m	.50	500	0	7	F131	DL8a
36	DL9-1404A15#2	1024	1	SSD	3.0M	MPG	600mØ	9.0	5.0	.80	3.0	110n	1.6m	.50	10k	0	7	F120b	TO99
37	DL9-1404A26#2	1024	1	SSD	3.0M	MPG	600mØ	9.0	5.0	.80	3.0	110n	1.6m	.50	10k	0	7	F120d	DLØ
38	DL9-1404A55#2	1024	1	SSD	3.0M	MPG	600mØ	9.0	5.0	.80	3.0	110n	1.6m	.50	10k	0	7	F120d	DL16ff
39	IM7712CTV	1024	1	SSD	3.0M	MPG	600mØØ	5.0	5.0	1.0	3.0	150n	1.6m	.50	500	5	8	F30a	TO100
40	IM7712CTW	1024	1	SSD	3.0M	MPG	600mØØ	5.0	5.0	1.0	3.0	150n	1.6m	.50	500	5	8	F30a	TO100
41	IM7722CMD	1024	1	SSD	3.0M	MPG	600mØØ	5.0	5.0	1.0	3.0	150n	1.6m	.50	500	5	8	F131	ML90
42	IM7722CPA	1024	1	SSD	3.0M	MPG	600mØØ	5.0	5.0	1.0	3.0	15n	1.6m	.50	500	5	8	F131	ML90
43	IM7722CTA	1024	1	SSD	3.0M	MPG	600mØØ	5.0	5.0	1.0	3.0	15n	1.6m	.50	500	5	8	F131	TO99
44	IM7722CTV	1024	1	SSD	3.0M	MPG	600mØØ	5.0	5.0	1.0	3.0	150n	1.6m	.50	500	5	8	F131	TO99
45	M58504P	1024	1	SSD	3.0M	MPG	15m†	5.0	5.0	.80	3.5	90n	1.6m	.50	500	1	7	PN16dh	DL16do
46	MTS3100	1024	1	SSD	3.0M	MPG	500m	5.0	5.0	1.0	3.0	150n			1.0k	0	7	F169a	TO100
47	2525N	1024	1	SSD	3.0M	MPX	535mØ	5.0	5.0	.60	3.4	100n	1.6m	1.0		0	7	F546a	DL8f
48	DL9-1024-21#1	1024	1	SSD	4.0M	MPG	200m†	5.0	0.0	.80	-1.5	160n	1.6m	.40	5.0k	0	7	F147b	TO100
49	DL9-1024-23#2	1024	1	SSD	4.0M	MPG	440m	12	5.0	.80	3.5	260n	1.6m	.50	10k	0	7	F147a	TO100
50	DL9-1024-28#2	1024	1	SSD	4.0M	MPG	440m	12	5.0	.80	3.5	260n	1.6m	.50	10k	0	7	F147c	DL14t
51	DL9-1024-69#2	1024	1	SSD	4.0M	MPG	440m	12	5.0	.80	3.5	260n	1.6m	.50	10k	0	7	F147c	DL14a
52	MM2412	1024	1	SSD	4.0M	MPG	500mØØ	5.0	5.0	.80	3.0	100n	1.6m	.50	30	5	C	F30a	TO100
53	MM3412	1024	1	SSD	4.0M	MPG	500mØØ	5.0	5.0	.80	3.0	100n	1.6m	.50	30	0	7	F30a	TO100
54	1404	1024	1	SSD	5.0M	MPG	600mØØ	5.0	5.0	.80♦	3.3	90n	1.6m	.50	10k	0	8	F29b	TO99
55	CM1404	1024	1	SSD	5.0M	MPG	350m	5.0	5.0	.80	3.5	90n	1.6m	2.0	330	0	7	PN8e	CLØ
56	CM1404A	1024	1	SSD	5.0M	MPG	350m	5.0	5.0	.80	3.5	90n	1.6	2.0	330	0	7	PN8e	CLØ
57	DL9-1404A15#1	1024	1	SSD	5.0M	MPG	525mØ	5.0	5.0	.80	3.0	90n	1.6m	.50	10k	0	7	F120b	TO99
58	DL9-1404A26#1	1024	1	SSD	5.0M	MPG	525mØ	5.0	5.0	.80	3.0	90n	1.6m	.50	10k	0	7	F120d	DLØ
59	DL9-1404A55#1	1024	1	SSD	5.0M	MPG	525mØ	5.0	5.0	.80	3.0	90n	1.6m	.50	10k	0	7	F120d	DL16ff
60	IM7704#1	1024	1	SSD	5.0M	MPG	250mØ♦	5.0	5.0	.80	3.3	90n	1.0u△		250	5	8	PN8e	TO99
61	IM7704#2	1024	1	SSD	5.0M	MPG	250mØ♦	5.0	5.0	.80	3.3	90n	1.0u△		250	5	8	PN8e	ML90
62	IM7704CMD	1024	1	SSD	5.0M	MPG	600mØØ	5.0	5.0	.80	3.0	90n	1.6m	.50	1.0k	0	8	PN8e	ML90
63	IM7704CTV	1024	1	SSD	5.0M	MPG	600mØØ	5.0	5.0	.80	3.0	90n	1.6m	.50	1.0k	0	8	PN8e	TO99
64	M130T1	1024	1	SSD	5.0M	MPG		5.0	5.0	.80	3.3	60n	1.6m	.50	100	0	7	F29b	TO99
65	M1404A	1024	1	SSD	5.0M	MPG	500m	5.0	5.0	.80	3.5	90n	1.6m	.50	10k	0	7	PN8e	CY4f
66	MF1404A	1024	1	SSD	5.0M	MPG	600mØØ	5.0	5.0	.80	3.0	110n	1.6m	.50	10k	0	8	F29b	TO99
67	MF1404A#1	1024	1	SSD	5.0M	MPG	600mØØ	5.0	5.0	.80	3.0	110n	1.6m	.50	10k	0	8	F29b	TO99
68	MF1404A#2	1024	1	SSD	5.0M	MPG	600mØ	5.0	5.0	.80	3.0	110n	1.6m	.50	10k	0	8	F29b	DL8a
69	MM1404AH	1024	1	SSD	5.0M	MPG	600mØØ	5.0	5.0	.80	3.3	90n	1.6m	.50	10k	0	7	PN8e	TO99
70	MM1404AN	1024	1	SSD	5.0M	MPG	600mØØ	5.0	5.0	.80	3.3	90n	1.6m	.50	10k	0	7	PN8k	DL8d
71	MM5024AH	1024	1	SSD	5.0M	MPG	600mØØ	5.0	5.0	.80	3.3	90n	1.6m	.50	10k	0	7	PN8g	TO99
72	P1404A	1024	1	SSD	5.0M	MPG	500m	5.0	5.0	.80	3.0	90n	1.6m	.50	10k	0	7	PN8k	ML116a
73	MP1404	1024	1	SSD	5.0M	MPX	600mØ	5.0	5.0	.80♦	3.3	90n	1.6m	.50	10k	5	8	F29b	TO99
74	TMS3414LC	1024	1	SSD	6.0M	MPG	600mØ	5.0	5.0	.80	3.3	80n	1.6m	.50	10k	2	8	F120b	TO99
75	TMS3414NC	1024	1	SSD	6.0M	MPG	600mØ	5.0	5.0	.80	3.3	80n	1.6m	.50	10k	2	8	F120d	DL16ez
76	2504TA	1024	1	SSD	8.0M	MPG	535mØ	5.0	5.0	1.05	3.2	90n	1.0u△	0.0	500	0	7	F29b	CY4d
77	2504V	1024	1	SSD	8.0M	MPG	535mØ	5.0	5.0	.60	3.4	90n			500	0	7	F29b	DL8a
78	DL9-1024-21#2	1024	1	SSD	8.0M	MPG	400m†	12	0.0	.80	-1.5	80n	1.6m	.40	5.0k	0	7	F147b	TO100
79	2504N	1024	1	SSD	8.0M	MPX	535mØ	5.0	5.0	1.05	3.2	90n	1.0u△	0.0	500	0	7	F547b	DL8f
80	SYM2804A	1024	1	SSD	10M	MNI	1.0 Ø	0.0	5.0	.80	3.0	1.0u	1.6m	.50		0	7	PN16da	DLØ
81	SYP2804A	1024	1	SSD	10M	MNI	1.0 Ø	0.0	5.0	.80	3.0	1.0u	1.6m	.50		0	7	PN16da	DLØ
82	AM280451F	1024	1	SSD	10M	MPG	250m♦	5.0	5.0	-10	-2.0	90n	1.6m	.50	5.0M	5	C	F120b	FL33a
83	AM280451T	1024	1	SSD	10M	MPG	250m♦	5.0	5.0	-10	-2.0	90n	1.6m	.50	5.0M	5	C	F120b	TO99
84	AM280459F#1	1024	1	SSD	10M	MPG	250m♦	5.0	5.0	-10	-2.0	90n	1.6m	.50	5.0M	0	7	F120b	FL33a
85	AM280459F#2	1024	1	SSD	10M	MPG	200m♦	9.0	5.0	-10	-2.0	110n	1.6m	.50	3.0M	0	7	F120b	FL33a
86	AM280459T#1	1024	1	SSD	10M	MPG	250m♦	5.0	5.0	-10	-2.0	90n	1.6m	.50	5.0M	0	7	F120b	TO99
87	AM280459T#2	1024	1	SSD	10M	MPG	200m♦	9.0	5.0	-10	-2.0	110n	1.6m	.50	3.0M	0	7	F120b	TO99
88	MM2404	1024	1	SSD	10M	MPG	500mØØ	5.0	5.0	.80	3.0	90n	1.6m	.50	30	5	C	PN8e	TO99
89	MM3404	1024	1	SSD	10M	MPG	500mØØ	5.0	5.0	.80	3.0	90n	1.6m	.50	30	0	7	PN8e	TO99
90	2533N	1024	1	SSS	1.5M	MPG	535mØ	12	5.0	.60	3.4	300n	1.6m	.50		0	7	F238b	DL8f
91	AM2533DC	1024	1	SSS	1.5M	MPG	150m♦	12	5.0	.80	2.0	300n	1.6m	.40		0	7	F287	DL8g
92	AM2533V	1024	1	SSS	1.5M	MPG	150m♦	12	5.0	.80	3.2	300n	1.6m	.40		0	7	F287	DL8e
93	MM5058N	1024	1	SSS	1.5M	MPG	456mØ	12	5.0	.80	3.5	300n	1.6m	.40		0	7	F238	DL8d
94	2533V	1024	1	SSS	1.5M	MPX	535mØØ	12	5.0	.60	3.4	300n	1.6mØ	.50		0	7	F238	DL8b
95	SYC2533	1024	1	SSS	2.0M	MNI	1.0 Ø	0.0	5.0	.80	2.0	300n	1.6m	.40		0	7	F238	ML263
96	SYP2533	1024	1	SSS	2.0M	MNI	1.0 Ø	0.0	5.0	.80	2.0	300n	1.6m	.40		0	7	F238	ML116a
97	SYT2533	1024	1	SSS	2.0M	MNI	1.0 Ø	0.0	5.0	.80	2.0	300n	1.6m	.40		0	7	F238	MO002AL
98	IM7733CDA	1024	1	SSS	2.0M	MNX	315m	0.0	5.0	.80	2.0		3.2m	.45		0	7	F238a	ML164a
99	IM7733CPA	1024	1	SSS	2.0M	MNX	315m	0.0	5.0	.80	2.0		3.2m	.45		0	7	F238a	ML163a
100	IM7733CTY	1024	1	SSS	2.0M	MNX	315m	0.0	5.0	.80	2.0		3.2m	.45		0	7	F238a	TO99
101	IM7733MDA	1024	1	SSS	2.0M	MNX	385m	0.0	5.0	.80	2.0		1.9m	.40		5	C	F238a	ML164a
102	IM7733MPA	1024	1	SSS	2.0M	MNX	385m	0.0	5.0	.80	2.0		1.9m	.40		5	C	F238a	ML163a
103	IM7733MTY	1024	1	SSS	2.0M	MNX	385m	0.0	5.0	.80	2.0		1.9m	.40		5	C	F238a	TO99
104	TMS3133NC	1024	1	SSS	2.0M	MPI	420m	12	5.0	.80	3.6	350n	1.6m	.40		2	8	F238	ML208
105	SYC2833	1024	1	SSS	3.0M	MNI	1.0 Ø	0.0	5.0	.80	2.0	300n	1.6m	.40		0	7	F238	ML263
106	SYMC2833	1024	1	SSS	3.0M	MNI	1.0 Ø	0.0	5.0	.80	2.0	300n	1.6m	.40		5	C	F238	ML263
107	SYP2833	1024	1	SSS	3.0M	MNI	1.0 Ø	0.0	5.0	.80	2.0	300n	1.6m	.40		0	7	F238	ML116a
108	SYT2833	1024	1	SSS	3.0M	MNI	1.0 Ø	0.0	5.0	.80	2.0	300n	1.6m	.40		0	7	F238	MO002AL
109	SYC2833A	1024	1	SSS	3.5M	MNI	1.0 Ø	0.0	5.0	.80	2.0	200n	1.6m	.40		0	7	F238	ML263
110	SYP2833A	1024	1	SSS	3.5M	MNI	1.0 Ø	0.0	5.0	.80	2.0	200n	1.6m	.40		0	7	F238	ML116a

SYMBOLS AND CODES EXPLAINED IN INTERPRETER

7. SHIFT REGISTERS

IN ORDER OF(1)No.BITS/REG(2)No.REGISTERS (3)OP.CODE(4)MAX W/C FREQ(5)STRUCT(6)TYPE No

LINE No.	6 TYPE NUMBER	ORGANIZATION 1 BITS PER REGISTER	2 NO REGS	3 OPER. CODE	4 MAX. WORST CASE FREQ. (Hz)	5 STRU-CTURE CODE	MAX. OPER. POWER DISS. (W)	RATED POWER SUPP. SPAN NEG. (V)	POS. (V)	INPUT LOGIC LEVELS MAX. '0' (V)	MIN. '1' (V)	MAX. PROP. DELAY (S)	MIN. OUTPUT SINK CURRENT (A)	@ OUT (V)	MIN. CLOCK FREQ. (Hz)	OPER TEMP RNGE CODE -	+	DRAWINGS FUNCTIONAL EQUIVALENT NUMBER	OUTLINE
1	SYT2833A	1024	1	SSS	3.5M	MNI	1.0 Ø	0.0	5.0	.80	2.0	200n	1.6m	.40		0	7	F238	MO002AL
2	SYC2833B	1024	1	SSS	5.0M	MNI	1.0 Ø	0.0	5.0	.80	2.0	150n	1.6m	.40		0	7	F238	ML263
3	SYP2833B	1024	1	SSS	5.0M	MNI	1.0 Ø	0.0	5.0	.80	2.0	150n	1.6m	.40		0	7	F238	ML116a
4	SYT2833B	1024	1	SSS	5.0M	MNI	1.0 Ø	0.0	5.0	.80	2.0	150n	1.6m	.40		0	7	F238	MO002AL
5	SYC2833C	1024	1	SSS	6.0M	MNI	1.0 Ø	0.0	5.0	.80	2.0	110n	1.6m	.40		0	7	F238	ML263
6	SYP2833C	1024	1	SSS	6.0M	MNI	1.0 Ø	0.0	5.0	.80	2.0	110n	1.6m	.40		0	7	F238	ML116a
7	SYT2833C	1024	1	SSS	6.0M	MNI	1.0 Ø	0.0	5.0	.80	2.0	110n	1.6m	.40		0	7	F238	MO002AL
8	SYC2401	1024	2	PPD	1.0M	MNIØ	1.0 Ø	0.0	5.0	.65	2.2	50n	10m	.45	1.0M	0	7	F495	DL16q
9	SYP2401	1024	2	PPD	1.0M	MNIØ	1.0 Ø	0.0	5.0	.65	2.2	50n	10m	.45	1.0M	0	7	F495	DL16fc
10	SYC2401-1	1024	2	PPD	2.5M	MNIØ	1.0 Ø	0.0	5.0	.65	2.2	50n	10m	.45	2.5M	0	7	F495	DL16q
11	SYP2401-1	1024	2	PPD	2.5M	MNIØ	1.0 Ø	0.0	5.0	.65	2.2	50n	10m	.45	2.5M	0	7	F495	DL16fc
12	MM4025D	1024	2	SSD	1.0M	MPG	409mØ	12	5.0	.80	3.3	160n	1.6m	.40	60k	5	C	F335	DL16bg
13	MM4026D	1024	2	SSD	1.0M	MPG	409mØ	12	5.0	.80	3.3	160n	1.6m	.40	60k	5	C	F336	DL16bg
14	MM5025D	1024	2	SSD	3.0M	MPG	409mØ	12	5.0	.80	3.3	160n	1.6m	.40	10k	0	7	F335	DL16bg
15	MM5025N	1024	2	SSD	3.0M	MPG	409mØ	12	5.0	.80	3.3	160n	1.6m	.40	10k	0	7	F338	ML203
16	MM5026D	1024	2	SSD	3.0M	MPG	409mØ	12	5.0	.80	3.3	160n	1.6m	.40	10k	0	7	F336	DL16bg
17	MM5026N	1024	2	SSD	3.0M	MPG	409mØ	12	5.0	.80	3.3	160n	1.6m	.40	10k	0	7	F336	DL16bh
18	SYC2825A	1024	2	SSD	6.0M	MXIØ		10	5.0	.80	4.0	500n	1.6m	.40	10k	0	7	F510	DL16q
19	SYC2826	1024	2	SSD	6.0M	MXIØ		10	5.0	.80	4.0	500n	1.6m	.40	10k	0	7	F511	DL16q
20	SYP2825A	1024	2	SSD	6.0M	MXIØ		10	5.0	.80	4.0	500n	1.6m	.40	10k	0	7	F510	DL16fc
21	SYP2826	1024	2	SSD	6.0M	MXIØ		10	5.0	.80	4.0	500n	1.6m	.40	10k	0	7	F511	DL16fc
22	MM4027F	2048	1	SSD	1.0M	MPG	409mØ	12	5.0	.80	3.3	160n	1.6m	.40	60k	5	C	F337	FL36
23	MM5027F	2048	1	SSD	3.0M	MPG	409mØ	12	5.0	.80	3.3	160n	1.6m	.40	10k	0	7	F337	FL36
24	MM5027N	2048	1	SSD	3.0M	MPG	409mØ	12	5.0	.80	3.3	160n	1.6m	.40	10k	0	7	F339	DL8d
25	SYC2827	2048	1	SSD	6.0M	MXIØ		10	5.0	.80	4.0	500n	1.6m	.40	10k	0	7	F512	DL8g
26	SYP2827	2048	1	SSD	6.0M	MXIØ		10	5.0	.80	4.0	500n	1.6m	.40	10k	0	7	F512	ML116a
27	MF2401	2048	2		1.0M		350m	0.0	5.0	.50	2.4		1.6m	.50		0	7		
28	TMS3064JL	4096	16	SSC	5.0M	MNG	260m†	5.0	12	.60	2.2	15n	3.2m	.40	1.0M	0	7	F473	DL16x
29	C2464	65536	1	SSC	2.5M	MNG		5.0	12	.80	2.2	285n	2.0m	.40		0	7	F521	ML115c
30	D2464	65536	1	SSC	2.5M	MNG		5.0	12	.80	2.2	285n	2.0m	.40		0	7	F521	ML231a

SYMBOLS AND CODES EXPLAINED IN INTERPRETER

20. SPECIAL MEMORY DEVICES

IN ORDER OF: (1)FUNCT CODE (2)NO. WORDS (3)BITS/WD (4)OP MODE (5)STRUCT &(6)TYPE NO.

LINE No.	6 TYPE NUMBER	1 FUNCTION CODE	ORGANIZATION 2 NUMBER OF WORDS	3 BITS PER WORD	4 OP MODE PROG CODE	5 STRUCTURE CODE	MAX. ACCES TIME (S)	MAX. OPER. POWER DISS.	RATED POWER SUPP. SPAN NEG. (V)	POS. (V)	INPUT LOGIC LEVELS MAX. '0' (V)	MIN. '1' (V)	MIN. OUTPUT SINK CURRENT (A)	OUTPUT VOLT. (V)	OPER TEMP RNGE CODE -	+	GENERAL DESCRIP.	DRAWINGS FUNCTIONAL EQUIVALENT NUMBER	OUTLINE
1	MM4220BNJ	ATN	128	8	SS	MPX	650n	300mØ	12	12	10*	4.0			5	C		Z19	DL24cc
2	MM5220BNJ	ATN	128	8	SS	MPX	650n	300mØ	12	12	10*	4.0			0	7		Z19	DL24cc
3	MM5220BNN	ATN	128	8	SS	MPX	650n	300mØ	12	12	10*	4.0			0	7		Z19	DL24au
4	S8771B	ATN	512	10	SS	MPI	450n	1.0	12	5.0	.60	4.0			0	6		B109a	ML13b
5	S8829#1	ATN	512	10	SS	MPI	450n	1.0	12	5.0	.60	4.0			0	7		B109	ML13b
6	S8829#2	ATN	1024	5	SS	MPI	450n	1.0	12	5.0	.60	4.0			0	7		B109	ML13b
7	100142D	CAM	4	4		BEG	6.5n$		4.5	0.0	-1.8*	-.88	55mØ		0	8		Z30	DL24cy
8	100142D#ai	CAM	4	4	SW	BEG	65n$		-4.5	0.0	-1.8*	-.88	55mØ		3	8		PN24gt	DL24ev
9	C3104	CAM	4	4	SW	BTD	30n	625m♦	0.0	5.0	.85	2.0	15m	.45	0	7		PN24gk	DL24bk
10	SCL5533D	CAM	8	8	SW	MCX	250n	6.0m♦	0.0	10	.05%	9.95	360u%	9.5	5	C		Z12	DL48a
11	SCL5533H	CAM	8	8	SW	MCX	250n	6.0m♦	0.0	10	.05%	9.95	360u%	9.5	5	C		Z12	CHØ
12	SCM5533D	CAM	8	8	SW	MCX	250n	6.0m♦	0.0	10	.05%	9.95	360u%	9.5	5	C		Z12	DL48a
13	SCM5533H	CAM	8	8	SW	MCX	250n	6.0m♦	0.0	10	.05%	9.95	360u%	9.5	5	C		Z12	CHØ
14	P2416	CCD	256	4	D	MNG	460n	300m	5.0	12	.80	3.5	3.0m	.45	1	8	64 Reg		DL18a
15	TMS3064-1JDL																		
		CCD	65536	1	DW	MNG	333n	320m	5.0	12	.60	2.2	3.2m	.40	0	7	16 Loops	Z58	DL16x
16	TMS3064JDL	CCD	65536	1	DW	MNG	200n	320m	5.0	12	.60	2.2	3.2m	.40	0	7	16 Loops	Z58	DL16x
17	EA4080	COS	512	10	SC	MPX	725n	205m	12	12	10	3.0			5	8		B38	DL24bb
18	TMS2150-9JDL																		
		MAC	512	9	SW	MNG	90n	660m	0	5	.8	2.0	12m	.4	0	7	8 Bit	Z117	DL24hj
19	7110	MBM	256	4K	S										0	5	CAP1MBit		
20	7110-3	MBM	256	4K	S										1	3	CAP1MBit		
21	RBM256	MBM	260	1kΔ	SX		4.0m	1.0 †		16					1	7	260kmin	Z54	X01
22	TIB0303	MBM	1137	224Δ	SX		7.3m								0	5	100kb/s	Z60	X04
23	RCD10241	MBS			S					5.0					0	7	COIL DR		Z71
24	RPD10241	MBS			S				0.0	5.0					0	7	Predrive		Z71a
25	RFD10241	MBS			S	BXX			0.0	5.0	2.0	.80	8.0m		0	7	Fun Dr		Z72
26	RSA10241	MBS			S	BXX			0.0	5.0	2.0	.80			0	7	SENS AMP		Z70
27	RCT10241	MBS			S	MNX		1.0	0.0	5.0					0	7	CONTROL		DL40j
28	CRC3004-1-3	MUL	256	8	SS	MPC	1.5u	270mØ	12	12	.40♦	2.5			0	7		B5	DL24bd
29	CRC3004-2-3	MUL	256	8	SS	MPC	1.5u	270mØ	12	12	.40♦	2.5			0	7		B5	FL10
30	B2000	PGA				BTD		1.5	0.0	5.0	8.0%	2.6§	8.0m		0	7			
31	B200	PGA	1	26	SC	MCG		1.0	0.0	5.0			10m#		2	8	SCHOTTKY		
32	B500	PGA	1	48	SC	MCG			0.0	5.0			10m#		2	8	SCHOTTKY		
33	C2000	PGA	1	72	SC	MCG			0.0	5.0					0	7	CMOS LSI		
34	RC82S102I	PGA	1	9	SE	BTX	55n	900m	0.0	5.0	.80	2.0Δ	9.6m	.50	5	C	16VAR	Z32	DL28j
35	RC82S102N	PGA	1	9	SE	BTX	50n	600m†	0.0	5.0	.80	2.0Δ	9.6m	.50	5	C	16VAR	Z32	DL28h
36	RC82S103I	PGA	1	9	SE	BTX	55n	900m	0.0	5.0	.80	2.0§	9.6m	.50	5	C	16VAR	Z32	DL28j
37	RC82S103N	PGA	1	9	SE	BTX	50n	600m†	0.0	5.0	.80	2.0§	9.6m	.50	5	C	16VAR	Z32	DL28h
38	PAL16R6MN	PLA	8	6	SE	BTD	45n$	750m†	0.0	5.0	.80	2.0§	12m	.50	5	C	16 Input	Z48	DL20p
39	S82S200I	PLA	48	8	SC	BTX	80n	900m	0.0	5.0	.80	2.0§	9.6m	.50	5	C	16 VAR	Z24	DL28j
40	S82S201I	PLA	48	8	SC	BTX	80n	900m	0.0	5.0	.80	2.0Δ	9.6m	.50	5	C	16 VAR	Z24	DL28j
41	29690DC	PLA	48	8	SE	BTD	30n$	600m†	0.0	5.0	.80	2.0Δ	12m	.45	0	7	16 VAR	Z35	DLØ
42	29690DM	PLA	48	8	SE	BTD	50n$	600m†	0.0	5.0	.80	2.0Δ	12m	.45	5	C	16 VAR	Z35	DLØ
43	29691DC	PLA	48	8	SE	BTD	30n$	600m†	0.0	5.0	.80	2.0§	12m	.45	0	7	16 VAR	Z35	DLØ
44	29691DM	PLA	48	8	SE	BTD	50n$	600m†	0.0	5.0	.80	2.0§	12m	.45	5	C	16 VAR	Z35	DLØ
45	MC29100LC	PLA	48	8	SE	BTX	50n	600m†	0.0	5.0	.80	2.0§			0	7	16 VAR	Z24	DL28n
46	MC29100LM	PLA	48	8	SE	BTX	50n	600m†	0.0	5.0	.80	2.0§			5	C	16 VAR	Z24	DL28n
47	MC29101LC	PLA	48	8	SE	BTX	50n	600m†	0.0	5.0	.80	2.0Δ			0	7	16 VAR	Z24	DL28n
48	MC29101LM	PLA	48	8	SE	BTX	50n	600m†	0.0	5.0	.80	2.0Δ			5	C	16 VAR	Z24	DL28n
49	MC82100LC	PLA	48	8	SE	BTX	50n	600m†	0.0	5.0	.80	2.0§			0	7	16 VAR	Z24	DL28n
50	MC82100LM	PLA	48	8	SE	BTX	50n	600m†	0.0	5.0	.80	2.0§			5	C	16 VAR	Z24	DL28n
51	MC82101LC	PLA	48	8	SE	BTX	50n	600m†	0.0	5.0	.80	2.0Δ			0	7	16 VAR	Z24	DL28n
52	MC82101LM	PLA	48	8	SE	BTX	50n	600m†	0.0	5.0	.80	2.0Δ			5	C	16 VAR	Z24	DL28n
53	RC82S100I	PLA	48	8	SE	BTX	80n	900m	0.0	5.0	.80	2.0§	9.6m	.50	5	C	16VAR	Z61	DL28j
54	RC82S100N	PLA	48	8	SE	BTX	80n	900m	0.0	5.0	.80	2.0§	9.6m	.50	5	C	16VAR	Z61	DL28h
55	RC82S101I	PLA	48	8	SE	BTX	80n	900m	0.0	5.0	.80	2.0Δ	9.6m	.50	5	C	16VAR	Z61	DL28j
56	RC82S101N	PLA	48	8	SE	BTX	80n	900m	0.0	5.0	.80	2.0Δ	9.6m	.50	5	C	16VAR	Z61	DL28h
57	SN54S330J	PLA	50	6	SE	BTD	35n$	550m†	0.0	5.0	.80	2.0§	20m	.50	5	C	12 VAR	Z25	DL20t
58	SN54S331J	PLA	50	6	SE	BTD	35n$	610m†	0.0	5.0	.80	2.0	20m	.50	5	C	12 VAR	Z25	DL20t
59	SN74S330J	PLA	50	6	SE	BTD	35n$	550m†	0.0	5.0	.80	2.0§	20m	.50	0	7	12 VAR	Z25	DL20t
60	SN74S330N	PLA	50	6	SE	BTD	35n$	550m†	0.0	5.0	.80	2.0§	20m	.50	0	7	12 VAR	Z25	DL20w
61	SN74S331J	PLA	50	6	SE	BTD	35n$	610m†	0.0	5.0	.80	2.0	20m	.50	0	7	12 VAR	Z25	DL20t
62	SN74S331N	PLA	50	6	SE	BTD	35n$	610m†	0.0	5.0	.80	2.0	20m	.50	0	7	12 VAR	Z25	DL20w
63	PAL2oR6ACJ883B																		
		PLA	64	6	SE	BTX	25n$		0	5	.8	2.0§	24m	.5	0	7	20inputs	Z113	DL24ey
64	DM7575J	PLA	96	8	SC	BTX	100n$	550m†	0.0	5.0	.80	2.0	12m	.40	5	C	14 VAR	Z14	DL24cc
65	DM7576J	PLA	96	8	SC	BTX	100n$	550m†	0.0	5.0	.80	2.0	12m	.40	5	C	14 VAR	Z14	DL24cc
66	DM8575J	PLA	96	8	SC	BTX	100n$	550m†	0.0	5.0	.80	2.0	12m	.40	0	7	14 VAR	Z14	DL24cc
67	DM8575N	PLA	96	8	SC	BTX	100n$	550m†	0.0	5.0	.80	2.0	12m	.40	5	C	14 VAR	Z14	DL24au
68	DM8576J	PLA	96	8	SC	BTX	100n$	550m†	0.0	5.0	.80	2.0	12m	.40	0	7	14 VAR	Z14	DL24cc
69	DM8576N	PLA	96	8	SC	BTX	100n$	550m†	0.0	5.0	.80	2.0	12m	.40	5	C	14 VAR	Z14	DL24au
70	29693DC	PMX	8	4	SE	BTD	55n	700m	0.0	5.0	.80	2.0§	16m	.50	0	7	10 Input	Z36a	DLØ
71	29693DM	PMX	8	4	SE	BTD	75n	700m	0.0	5.0	.80	2.0§	16m	.50	5	C	10 Input	Z36a	DLØ
72	29693FM	PMX	8	4	SE	BTD	75n	700m	0.0	5.0	.80	2.0§	16m	.50	5	C	10 Input	Z36	FLØ
73	S8890	RYG	64	1	SS	MPI			12	0.0	-10	-.70			0	7	10 RHY	Z22	ML14c
74	S9660	RYG	64	1	SS	MPI			12	0.0	0.0	-.70			0	7	7 RHY	Z23	ML155
75	S2566	RYG	256	8	SC	MPX		160m†			-18	.30			0	5		B146	DL24ag
76	M253B1XX	RYG	384	8	SC	MPG		120m	12	5.0	.90	3.5			0	7	12 RHY	Z17a	DL24ba
77	M253D1XX	RYG	384	8	SC	MPG		120m	12	5.0	.90	3.5			0	7	12 RHY	Z17a	DL24dc
78	M253B1AA	RYG	384	8	SS	MPG		120m	12	5.0	.90	3.5			0	7	12 RHY	Z17	DL24ba
79	M253D1AA	RYG	384	8	SS	MPG		120m	12	5.0	.90	3.5			0	7	12 RHY	Z17	DL24dc
80	M250D1	RYG	432	8	SC	MPN		180m†	0.0	18	8.0	17	100uΔ	18	0	7	12 RHY	Z15	DL24dc
81	M254B1XX	RYG	432	8	SC	MPN		180m	0.0	18	8.0	17			0	7	8 RHY	Z18	DL24ba
82	M252B1XX	RYG	480	8	SC	MPG		120m	12	5.0	.90	3.5			0	7	15 RHY	Z16a	DL16eo
83	M252D1XX	RYG	480	8	SC	MPG		120m	12	5.0	.90	3.5			0	7	15 RHY	Z16a	DL16v
84	M252B1AA	RYG	480	8	SS	MPG		120m	12	5.0	.90	3.5			0	7	15 RHY	Z16	DL16eo
85	M252D1AA	RYG	480	8	SS	MPG		120m	12	5.0	.90	3.5			0	7	15 RHY	Z16	DL16v
86	MCM6550L	RYG	7168	1	SC	MNM	1.0m	500m	0.0	5.0	.60	3.0	2.0m	.40	0	7		Z5	ML189
87	MCM6550P	RYG	7168	1	SC	MNM	1.0m	500m	0.0	5.0	.60	3.0	2.0m	.40	0	7		Z5	ML190
88	S8773#3	SCN	256	10	SC	MPI	550n	595m	12	5.0	.60	3.7			0	6		C48	DL24a
89	S8773A	SCN	256	10	SC	MPI	550n	595m	12	5.0	.60	3.7			0	6		C48	DL24a
90	S8771#1	SCN	512	10	SS	MPI	450n	1.0	12	5.0	.60	4.0			0	6		B109	ML13b
91	S8771A	SCN	512	10	SS	MPI	450n	1.0	12	5.0	.60	4.0			0	6		B109a	ML13b
92	S8772#1	SCN	512	8	SS	MPI	450n	1.0	12	5.0	.60	4.0			0	7		A145	ML13b
93	S8772#2	SCN	1024	4	SS	MPI	450n	1.0	12	5.0	.60	4.0			0	7		A145	ML13b
94	S8771#2	SCN	1024	5	SS	MPI	450n	1.0	12	5.0	.60	4.0			0	6		B109	ML13b
95	CRC3003-1-3	SIN	128	8	SS	MPC	4.0u	130m†	27	0.0	-2.0	-9.0			0	7		B4	DL24ay
96	CRC3003-2-3	SIN	128	8	SS	MPC	4.0u	130m†	27	0.0	-2.0	-9.0			0	7		B4	FL3
97	MM4220BMJ	SIN	128	8	SS	MPX	650n	300mØ	12	12	10*	4.0			5	C		Z19	DL24cc
98	MM5220BMJ	SIN	128	8	SS	MPX	650n	300mØ	12	12	10*	4.0			0	7		Z19	DL24cc
99	MM5220BMN	SIN	128	8	SS	MPX	650n	300mØ	12	12	10*	4.0			0	7		Z19	DL24au
100	EA4079	SIN	512	10	SC	MPX	725n	205m	12	12	10	3.0			5	8		B38	DL24bb
101	MM4232AEIJ	SIN	512	8	SS	MPX	1.0u	629mØ	12	5.0	1.0	3.0§	1.6m	.40	5	C		Z20	DL24cc
102	MM4232AEJJ	SIN	512	8	SS	MPX	1.0u		12	5.0	1.0	3.0§	1.6m	.40	5	C		Z20	ML183a
103	MM4232AEKJ	SIN	512	8	SS	MPX	1.0u		12	5.0	1.0	3.0§	1.6m	.40	5	C		Z20	ML183a
104	MM5232AEIJ	SIN	512	8	SS	MPX	1.0u	629mØ	12	5.0	1.0	3.0§	1.6m	.40	0	7		Z20	DL24cc
105	MM5232AEIN	SIN	512	8	SS	MPX	1.0u	629mØ	12	5.0	1.0	3.0§	1.6m	.40	0	7		Z20	DL24au
106	MM5232AEJJ	SIN	512	8	SS	MPX	1.0u		12	5.0	1.0	3.0§	1.6m	.40	0	7		Z20	ML183a
107	MM5232AEJN	SIN	512	8	SS	MPX	1.0u		12	5.0	1.0	3.0§	1.6m	.40	0	7		Z20	DL24au

SYMBOLS AND CODES EXPLAINED IN INTERPRETER

20. SPECIAL MEMORY DEVICES

IN ORDER OF: (1)FUNCT CODE (2)NO. WORDS (3)BITS/WD (4)OP MODE (5)STRUCT &(6)TYPE NO.

LINE No.	6 TYPE NUMBER	1 FUNC-TION CODE	ORGANIZATION 2 NUMBER OF WORDS	3 BITS PER WORD	4 OP MODE PROG CODE	5 STRUC-TURE CODE	MAX. ACCES TIME (S)	MAX. OPER. POWER DISS.	RATED POWER SUPP. SPAN NEG. (V)	POS. (V)	INPUT LOGIC LEVELS MAX. '0' (V)	MIN. '1' (V)	MIN. OUTPUT SINK CURRENT (A)	OUTPUT VOLT. (V)	OPER TEMP RNGE CODE -	+	GENERAL DESCRIP.	DRAWINGS FUNCTIONAL EQUIVALENT NUMBER	OUTLINE
1	MM5232AEKJ	SIN	512	8	SS	MPX	1.0u		12	5.0	1.0	3.0§	1.6m	.40	0	7		Z20	ML183a
2	MM5232AEKN	SIN	512	8	SS	MPX	1.0u		12	5.0	1.0	3.0§	1.6m	.40	0	7		Z20	DL24au
3	5086D	SIN	1024	10	SC	BTD	150n	500m†	0.0	5.0	.80	2.0	6.0m	.50	5	C		B125	ML47c
4	6086D	SIN	1024	10	SC	BTD	150n	500m†	0.0	5.0	.80	2.0	6.0m	.50	0	7		B125	ML47c
5	EA3801	SIN	1024	12	DC	MPX	2.5u	350m	12	12	-2.0	-10			0	7		B93	DLØ
6	MC68A29L#ai	SYS		$	S	MNG	667n	800m	0.0	5.0	0.8	2.0§	2.0m	0.5	0	7	MMU	Z103	DL40n
7	MC68A29P#ai	SYS		$	S	MNG	667n	800m	0.0	5.0	0.8	2.0§	2.0m	0.5	0	7	MMU	Z103	DL40O
8	MC68B29L#ai	SYS		$	S	MNG	500n	800m	0.0	5.0	0.8	2.0§	2.0m	0.5	0	7	MMU	Z103	DL40n
9	MC68B29P#ai	SYS		$	S	MNG	500n	800m	0.0	5.0	0.8	2.0§	2.0m	0.5	0	7	MMU	Z103	DL40O
10	MC6829L#ai	SYS		$	S	MNG	1.0u	800m	0.0	5.0	0.8	2.0§	2.0m	0.5	0	7	MMU	Z103	DL40O
11	MC6829P#ai	SYS		$	S	MNG	1.0u	800m	0.0	5.0	0.8	2.0§	2.0m	0.5	0	7	MMU	Z103	DL40O
12	NC7035	SYS	16	18	SE	MPX	1.8m	360m	18	0.0	-7.0	-1.0	500u	-1.0	2	8	Non-VOL	Z27	DLØ
13	NC7033	SYS	21	16	SE	MPN	10u	420m	30	0.0	-4.6	-.80	500u	-1.0	0	7	Non-VOL	Z26	
14	NC7053L	SYS	128	8	SE	MPN	1.0u	350m	25	5.0	.80	2.4	1.6m	.45	0	7	NON-VOL	Z33	DL24dh
15	NC7053P	SYS	128	8	SE	MPN	1.0u	350m	25	5.0	.80	2.4	1.6m	.45	0	7	NON-VOL	Z33	DL24bv
16	NC7054L	SYS	256	4	DE	MPN	1.0u	370m	25	5.0	.80	2.4	2.0m	.45	0	7	NON-VOL	Z34	DLØ
17	NC7054M	SYS	256	4	DE	MPN	1.0u	370m	25	5.0	.80	2.4	2.0m	.45	0	7	NON-VOL	Z34	DLØ
18	NC7054P	SYS	256	4	DE	MPN	1.0u	370m	25	5.0	.80	2.4	2.0m	.45	0	7	NON-VOL	Z34	DLØ
19	ER1711	SYS	256	4	SE	MPI	900n	540mØ	12	5.0	.80	3.5	1.6m	.70	0	7	RAM/ROM	PN22bf	DL22y
20	NC7714	SYS	256	4	SE	MPI	900n	510m	15	25	.80	3.3§	1.6m	.60	0	7	NON-VOL	PN22bf	DLØ
21	MCM0464L50	SYS	65536	1	DW	MNG	50n	1.0 Ø	5.0	12	.80	2.4§	3.5m	.40	0	7	16 Reg	Z52	DL16q
22	MCM0464L60	SYS	65536	1	DW	MNG	60n	1.0 Ø	5.0	12	.80	2.4§	3.5m	.40	0	7	16 Reg	Z52	DL16q
23	MCM0464L70	SYS	65536	1	DW	MNG	70n	1.0 Ø	5.0	12	.80	2.4§	3.5m	.40	0	7	16 Reg	Z52	DL16q
24	NOM201C	TRA	1	1	SE	MPN			-40	40	-3.5	-13	1.0nΔ	-10	4	A	Non-Vol	Z1	CY9
25	NOM202C	TRA	1	2	SE	MPN			-40	40	-3.5	-13	1.0nΔ	-10	4	A	Non-Vol	Z2	CY10
26	NOM204C	TRA	1	4	SE	MPN			-40	40	-3.5	-13	1.0nΔ	-10	4	A	Non-Vol	Z3	DL14am

SYMBOLS AND CODES EXPLAINED IN INTERPRETER

SPACE-SAVERS UTILIZED IN THIS MANUFACTURER LISTING

(*) – Manufacturer not a current commercial producer – address is that last recorded in our files. Company may or may not be active at this address.

see (code) – Indicates one or more of the following changes have occurred since original letter code was used: (1) Change of code; (2) Change of manufacturer name; (3) Purchase by or combination with another manufacturer.

MANUFACTURERS IN ORDER OF D.A.T.A. CODE LETTERS

(*)	**AEX**	– Ampex Corp., 13031 W. Jefferson Blvd., Marina Del Rey, CA 90291
	AEGG	– AEG-Telefunken-Anlagentechnik, Postfach 2160, D-4788 Warstein 2, Industriekomponenten W. Germany
	ALGG	– Telefunken Electronic GmbH, Postfach 1109, 7100 Heilbronn, W. Germany
	AMD	– Advanced Micro Devices, Inc., 901 Thompson Pl., Sunnyvale, CA 94086
	AMI	– American Micro Systems, Inc., 3800 Homestead Rd., Santa Clara, CA 95051
(*)	**AMS**	– Advanced Memory Systems Inc., 1276 Hammerwood Ave., Sunnyvale, CA 94086
	ANA	– Analog Devices, Inc., P.O. Box 280, Norwood, MA 02062
	AND	– AND, Inc., 7700 Airport Blvd., Burlingame, CA 94010
	ANS	– Analog Systems, P.O. Box 35879, Tucson, AZ 85740
	BEC	– Beckman Instruments Inc., 350 N. Hyden Rd., Scottsdale, AZ 85257
	BECK	– Beckman Instruments Inc., 2500 Harbor Blvd., Fullerton, CA 92634
(*)	**BOW**	– Bowmar, Inc., 4900 Indian School Rd., Phoenix, AZ 85018
	BUB	– Burr-Brown Research Corp., P.O. Box 11400, S. Tucson Blvd., Tucson, AZ 85734
	CER	– Cermetek Inc., 1308 Borregas, Sunnyvale, CA 94086
(*)	**CGR**	– Cogar Corp., Technology Dept., All Angels Hill Rd., Wappinger Falls, NY 12590
	CHE	– Cherry Semiconductor Corp., 99 Bald Hill Rd., Cranston, FI 02920
	CMI	– CTS Microelectronics, Inc., 1201 Cumberland Ave., W. LaFayette, IN 47906
(*)	**CRC**	– Collins Radio Co., MOS Standard Products, 4311 Jamboree Blvd., Newport Beach, CA 92663
	DDC	– ILC Data Device Corp., 105 Wilbur Pl., Airport International Plaza, Bohemia, NY 11716
	DIO	– Dionics Inc., 65 Rushmore St., Westbury, NY 11590
	DSI	– Dahlberg Electronics, 14050 21st Ave., North, Minneapolis, MN 55441
(*)	**DTC**	– Data Tech, A Div. of Penril Corp., 2700 S. Fairview Rd., Santa Ana, CA 92704
	DTI	– Data Translation, Inc., 100 Locke Dr., Marlboro, MA 01752
	DTL	– Datel-Intersil Inc., 11 Cabot Blvd., Mansfield Industrial Pk., Mansfield, MA 02048
	EAI	– Electronic Arrays Inc., 550 E. Middlefield Rd., Mountain View, CA 94043
	ECV	– Energy Conversion Devices, Inc., 1675 W. Maple Rd., Troy, MI 48084
(*)	**EEC**	– Electronic Engineering Co. of Calif., Components Div., 1441 E. Chestnut Ave., Santa Ana, CA 92702
	FCAJ	– Fujitsu Ltd., 1015 Kamikodanaka, Nakahara-Ku, Kawasaki 211, Japan
	FERB	– Ferranti Electronics Ltd., Field New Rd., Chaddeton, Oldham OL9 8NP, England
	FMI	– Fujitsu Microelectronics Inc., 2945 Oakmead Village Court, Santa Clara, CA 95051
	FSC	– Fairchild Camera & Instrument/Hybrid Div., 369 Whisman Rd., Mountain View, CA 94043
(*)	**GECB**	– GEC Semiconductor Ltd., Wiltham, Essex, England
(*)	**GESY**	– General Electric Co., 11501 Rojas, El Paso, TX 79935
	GIC	– General Instrument Corp., 600 W. John St., Hicksville, NY 11802
	GTE	– GTE Microcircuits, 200 W. 14th St., Tempe, AZ 85281
	HAS	– Harris Semiconductor, P.O. Box 883, Melbourne, FL 32901

MANUFACTURERS IN ORDER OF D.A.T.A. CODE LETTERS

	HBC	– Hybrid Systems Corp., 22 Linnell Circle Suburban Ind., Billerica, MA 01821
	HITJ	– Hitachi Ltd., 1450 Josuihon-cho, Kolaira-shi, Tokyo 187, Japan
	ICC	– Information Control Corp., Abacus Div., 9610 Bellanca Ave., Los Angeles, CA 90045
	INL	– Intersil, Inc., 10710 N. Tantau Ave., M/S 37, Cupertino, CA 95014
(*)	**INS**	– Insetek, University Park Plaza, 743 Alexander Rd., Princeton, NJ 08540
	ITL	– Intel Corp., 3065 Bowers Ave., Santa Clara, CA 95051
	ITTG	– ITT Semiconductors Intermetal, P.O. Box 840, D-7800 Freiburg 1 BR W. Germany
	LAM	– Lambda Semiconductor, 515 Broad Hollow Rd., Melville, NY 11746
	MATJ	– Matsushita Electronics Corp., Semicon. Div., 1 Kotari-Yakemachi, Nagaokakyo, Kyoto 617, Japan
(*)	**MILC**	– Microsystems International, Ltd., Box 3529, Station C, Ottawa, Canada
	MITC	– Mitel Semiconductor, Inc., P.O. Box 13089, Kanata, Ottawa, Ontario, Canada K2K 1XS
	MITJ	– Mitsubishi Electric Corp., Kita-Itami Works, 4-1 Mizuhara, Itami-shi, Hyogo-Ken, Post Code 664, Japan
	MMI	– Monolithic Memories, Inc., 1165 E. Arques Ave., Sunnyvale, CA 94086
	MMT	– Memory Technology, Inc., 533 Boston Post Rd., Waland, MA 01776
	MNC	– Micro Networks Corp., 324 Clark St., Worcester, MA 01606
	MON	– Aydin Monitor Systems, P.O. Box 328, Newton, PA 18940
	MOS	– Mostek Corp., 1215 W. Crosby Rd., Carrollton, TX 75006
	MOTA	– Motorola Semiconductor Products, Inc., 725 S. Madison St., Tempe, AZ 85281
	MTY	– MOS Technology Inc., Valley Forge Corporate Ctr., 950 Rittenhouse Rd., Norristown, PA 19401
	MULB	– Mullard Ltd., New Road, Mitcham, Surrey, England CR4 4XY
	NECJ	– Nippon Electric Co., Ltd., 3-484 Tsukagoshi Saiwai-Ku, Kawasaki City, Kanagawa, Japan 210
	NECM	– NEC Microcomputers Inc., One Natick Executive Park, Natick, MA 01760
	NIT	– Nitron Inc., 1786 The Alameda 3, San Jose, CA 95126
	NSC	– National Semiconductor, Microcirc. Div., 2900 Semiconductor Dr. M/S 16250, Santa Clara, CA 95051
(*)	**OEI**	– Optical Electronic Inc., P.O. Box 11140, Tucson, AZ 85734
	OKIJ	– OKI Electric Industry Co., Ltd., 4-10-3 Shibaura, Minato-Ku, Tokyo 108, Japan
(*)	**PHIL**	– Philco-Ford Corp., Microelectronics Div., 1400 Union Meeting Rd., Blue Bell, PA 19422
	PHIN	– Philips Elect. Comp Material Div., Elcoma Comm. Dept., Endhoven, Netherlands
	PLSB	– Plessey Semiconductors, Ltd., Cheney Manor, Swindon, Wiltshire, England SN2 2QW
	PMI	– Precision Monolithics, Inc., 1500 Space Park Drive, Santa Clara, CA 95050
(*)	**QDC**	– Qualidyne Corp., 1230 Bordeaux Dr., Sunnyvale, CA 94086
(*)	**QDI**	– Quadri Corp., 2950 W. Fairmont, Phoenix, AZ 85017
	RCA	– RCA Corp., Solid State Div., Route 202, Somerville, NJ 08876
	RKW	– Rockwell Int'l Elec. Devices Div., 4311 Jamboree Rd., Newport Beach, CA 92660
	RTC	– Riehl Time Corp., 53 S. Jefferson, Whippany, NJ 07981
	RTCF	– R.T.C.-La Radiotechnique-Compelec, 130 Ave. Ledru-Rollin, 75 540 Paris Cedex 11 France
	RTN	– Raytheon Co., 350 Ellis St., Mountain View, CA 94042
	SELI	– Semiconductors Ltd., M/S Advani Oerlikon Tld. Ahmednagar Rd., Mile 4/5 Poona, 411 014, India
	SGSI	– SGS-ATES Componenti Elettronici S.p.A., Via C. Olivette, 2, 20041 Agrate Brianza, Milan, Italy
	SGL	– Silicon General Inc., 11651 Monarch St., Garden Grove, CA 92641
	SIC	– Signetics Corp., 811 E. Arques Ave., M/S 2523, Sunnyvale, CA 94086

DISCARDED

MANUFACTURERS IN ORDER OF D.A.T.A. CODE LETTERS

	SIEG	– Siemens Aktiengesellschaft, Balanstrasse 73, D-8000, Munchen 80, W. Germany
(*)	**SLTC**	– Siltek International Ltd., Airport Industrial Pk., Bromont, Quebec, Canada
	SIX	– Siliconix, Inc., 2201 Laurelwood Rd., Santa Clara, CA 95054
	SMC	– Standard Microsystems Corp., 35 Marcus Blvd., Hauppage, NY 11787
	SOD	– Solitron Devices, Inc., 8808 Balboa Ave., San Diego, CA 92123
	SPR	– Sprague Electric Co., 87 Marshall St., N. Adams, MA 01247
	SSS	– Solid State Scientific Inc., 3900 Welsh Rd., Willow Grove, PA 19090
	SST	– Solid State, Inc., 46 Farrand St., Bloomfield, NJ 07003
	STX	– Supertex Inc., 1225 Bordeaux Dr., Sunnyvale, CA 94089
(*)	**SWM**	– Stewart-Warner Microcircuits Inc., 730 E. Evelyn Ave., Sunnyvale, CA 94086
	SYK	– Synertek, Inc., 3001 Stender Way, Santa Clara, CA 95051
	TAI	– Toko America Inc., 5520 W. Touhey Ave., Skokie, IL 60077
(*)	**TEC**	– Transitron Electronic Corp., 168-182 Albion St., Wakefield, MA 01880
	THEF	– Thomson-CSF/EFCIS, 6660 Variel Ave., Canoga Park, CA 91304
	TII	– Texas Instruments, Inquiry Answer Service M/S 308, P.O. Box 225012, Dallas, TX 75265
	TIIB	– Texas Instruments Ltd., Manton Ln., Bedford, England
	TMI	– Transmagnetics, 210 Adams Blvd., Farmingdale, NY 11735
	TOSJ	– Toshiba Corp., c/o Toshiba Trans Works, 1 Komukai Toshibacho Saiwai-ku, Kawasaki City, Kanagawa, Japan
	TPN	– Teledyne Philbrick, Allied Drive at Route 128, Dedham, MA 02026
	TSAJ	– Tokyo Sanyo Electric Co., Ltd., Semicon Div., Oizumimachi Oragun, Gumma, Japan
	TSC	– Teledyne Semiconductor Corp., 1300 Terra Bella Ave., Mountain View, CA 94043
(*)	**TUNH**	– Action Tungsram, Inc., H1340, Budapest, Hungary
	VALG	– Valvo GmbH, P.O. Box 993, D2000 Hamburg 1, W. Germany
	WDC	– Western Digital Corp., 2445 McCabe Way, Irvine, CA 92714
	WLD	– Wyle Laboratories/Computer Products, 3200 Magruder Blvd., Hampton, VA 23666
(*)	**XDS**	– Xerox Data Systems, 565 S. Aviation Blvd., El Segundo, CA 90245
	XIC	– Xicor Inc., 851 Buckeye Ct., Milpitas, CA 95035
	ZIC	– Zilog Microcomputers, 1315 Dell Ave., Campbell, CA 95008
	ZIL	– Zilog Inc., 1315 Dell Ave., Campbell, CA 95008

NEWARK ELECTRONICS
STOCKS
SEMICONDUCTORS

- GENERAL ELECTRIC
- GENERAL INSTRUMENTS
- INTERNATIONAL RECTIFIER
- INTERSIL
- IDI
- LANSDALE
- MOTOROLA
- RCA
- SPRAGUE
- TEXAS INSTRUMENTS
- U.S. CRYSTAL

One Call...

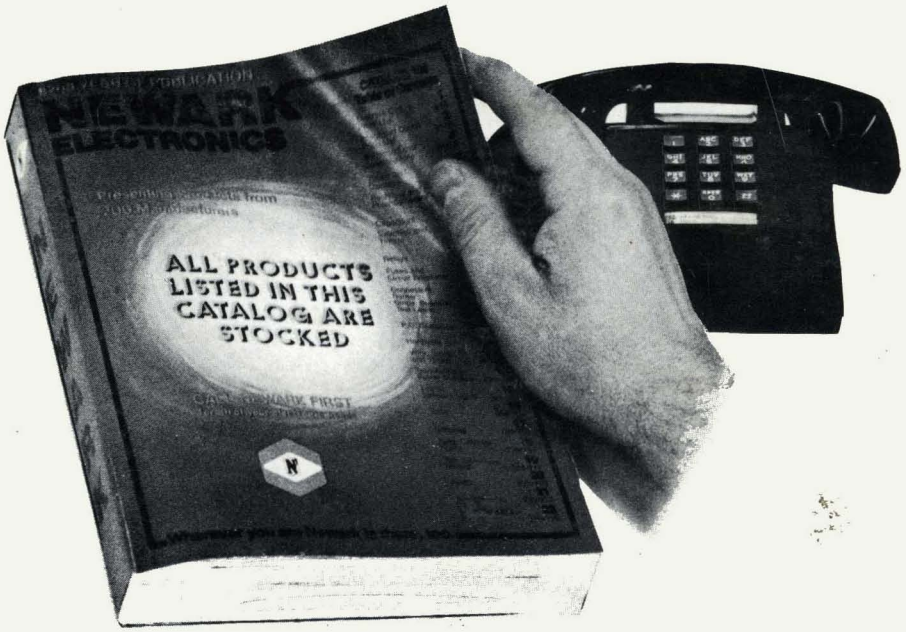

PUTS TENS OF THOUSANDS OF POPULAR INTEGRATED CIRCUITS AND DESCRETE DEVICES FROM 11 MAJOR MANUFACTURERS

AT YOUR FINGERTIPS
FOR IMMEDIATE DELIVERY!

NEWARK *has it all for you!*

WRITE FOR YOUR **FREE** CATALOG #106 TODAY

NEWARK ELECTRONICS
500 N PULASKI RD · CHICAGO ILL 60624

OVER 130 NEWARK LOCATIONS NATIONWIDE TO SERVE YOU.
A DIVISION OF PREMIER INDUSTRIAL

3210