1987

D.A.T.A.BOOK®
ELECTRONIC INFORMATION SERIES

OPTOELECTRONICS
EDITION 21

VOLUME 32
BOOK 31
JULY 1987

D.A.T.A.BOOK®

ELECTRONIC INFORMATION SERIES

OPTOELECTRONICS

EDITION 21

D.A.T.A

CHANGES THIS EDITION

- 1,969 New Types Added
- 6,530 Devices Revised
- 1,160 Types Obsoleted

1987
D.A.T.A.BOOK®
ELECTRONIC INFORMATION SERIES
OPTOELECTRONICS EDITION 21

621.367
OPT
Jul 1987

SIEMENS

From Siemens... the world's most complete optoelectronics line.

The Siemens line of optoelectronics offers you the broadest product choice in the industry...ready now for prompt delivery, quality performance and highly competitive pricing!

Siemens, a world leader in electronics, offers you through its Optoelectronics Division what well may be the broadest, most complete line of optoelectronic products available anywhere. This means the Siemens product line can be your one source for virtually all your optoelectronic needs.
Count on prompt service and competitive pricing whether your needs are for Intelligent Display® devices with built-in CMOS drive circuitry, numeric displays, bar graphs, light bars, LED lamps, optocouplers, IR emitters or photodetectors.

Siemens has one of the world's most advanced high volume automated facilities. That's why we can deliver virtually any size order fast. For further information on our complete line of optoelectronics, or applications engineering assistance, contact Siemens Optoelectronics Division, 19000 Homestead Road, Cupertino, California 95014, Telephone (408) 257-7910.

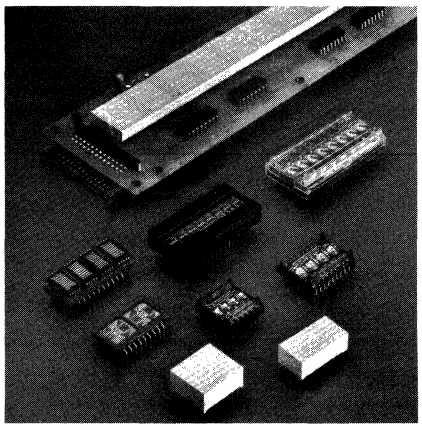

Intelligent Display® Devices

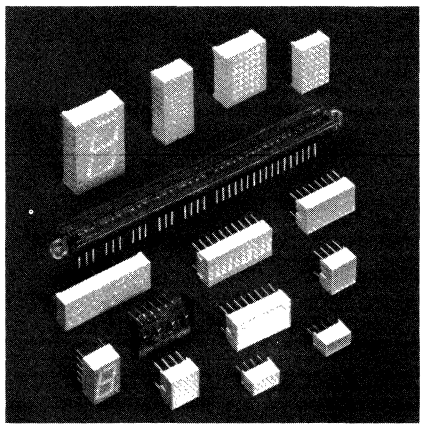

Numeric Displays, Bar Graphs & Light Bars

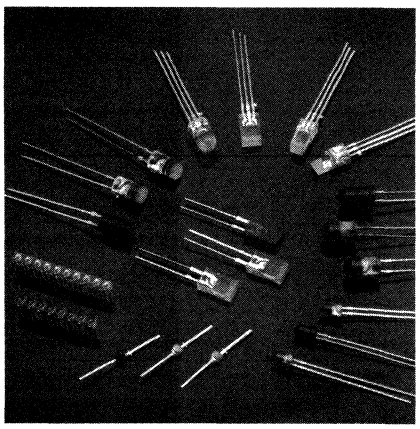

LED Lamps

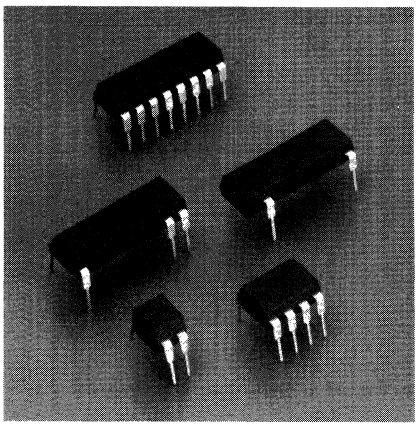

Optocouplers

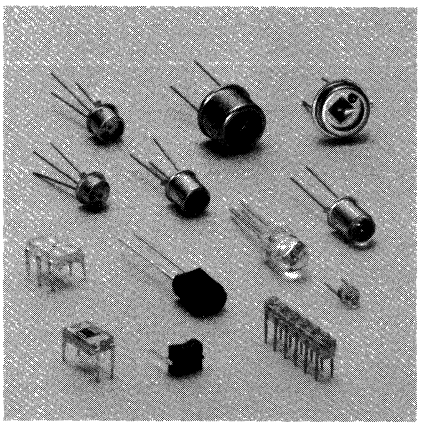

Infrared Devices

Siemens...Your partner for the future.

©1987 Siemens Components, Inc.
Intelligent Display is a registered trademark of Siemens Components, Inc.

CG/2600-042 WLM 559

D.A.T.A., INC.
9889 Willow Creek Rd. P.O. Box 26875
San Diego, California 92126
Phone - (619) 578-7600
Telex - 910-530606
Mailbox - 62773091

TOLL-FREE (800) 854-7030
In CA (800) 421-0159

PUBLISHER
Laurence E. Laumann, *General Manager*
Virginia Sorrells, *Administrative Assistant*

EDITORIAL & PRODUCT DEVELOPMENT
Steve d'Adolf, *V.P., Product Development*
Paul R. Magin, *Sr. Editor*
Karen E. Wilcox, *Editorial Production Manager*
Mary Herrin, *Production Coordinator*
Suzann M. Anderson, *Manufacturers Service Representative*

ENGINEERING EDITORS
James Mastt, *Sr. Editor*
William T. Dennison, Stephen P. Rogers
Steven H. Rohrick, Douglas D. Gieseke
Frank E. Winsor, Sultan M. Ashraf
Minh C. Dao, Mark W. Murray
Phuong Tran, William J. Boilore
Tim McKinley, Craig A. Showman

PRODUCTION EDITORS
Dixie Wilson, Larisa Botvinik

GRAPHICS
Otto D. Ellison, *Graphics Manager*
Elizabeth A. Victor, *Coordinator*
Eugene King
Debra Ann Day
Denise Lynch

MARKETING & ADVERTISING
Norris Durham, *Director of Market Development*
Patricia A. Wilson, *Director of Direct Response Marketing*
Mary Jane Candaux, *Marketing Production Coordinator*
Deborah L. Hubbard, *Marketing Production Coordinator*
Lawrence Barnett, *Direct Marketing Specialist*
Robert J. Knudsen, *Space Advertising Sales Representative*
Nita Main, *Secretary*
Carolyn Jolly, *Manager of Telemarketing*
Thomas Marshall, *Supervisor of Telemarketing*
G. Don Leavell, *Major Accounts Coordinator*

OPERATIONS
Judy Treitler, *Marketing Operations Manager*
Phyllis Gosse, *Customer Service Coordinator*
Maureen Meals, *Customer Service*
Sheree Wrightman, *Customer Service*
Juanita Myers, *Communications Coordinator*

INTERNATIONAL MARKETING
Doug Daniel, *International Sales Director*
Sheila Lyons, *International Secretary/ Marketing Assistant*
European Office:
D.A.T.A. International, Inc.
Orpin House, Hilders Lane
Edenbridge TN8 6JX, Kent, England
Telex: (851) 95671 EDNMET G

D.A.T.A., Inc., 9889 Willow Creek Rd.
P.O. Box 26260, San Diego, CA 92126

D.A.T.A.BOOK (USPS 559-390, ISSN 0732-5894) Electronic Information Series is published 56 times per year in the following sequence: 5 in Jan., 6 in Feb., 7 in Mar., 1 in Apr., 6 in May, 4 in Jun., 6 in Jul., 5 in Aug., 6 in Sept., 2 in Oct., 5 in Nov., 3 in Dec., for $3,470 (Full U.S. Price) by D.A.T.A., Inc., 9889 Willow Creek Rd., P.O. Box 26875, San Diego, CA 92126. Second-class postage paid at San Diego, CA.

POSTMASTER: Send address changes to D.A.T.A., Inc., P.O. Box 26875, San Diego, CA 92126.

COPYRIGHT©1987 by Derivation and Tabulation Associates, Inc., all rights reserved. No part of this publication may be transmitted, in any form or by any means, electronic, mechanical, photocopying, recording or otherwise, without the prior written permission of the publisher and corporate officer. This includes text, tabularized information and illustrations.

Annual Publication

1987 D.A.T.A.BOOK®

ELECTRONIC INFORMATION SERIES
VOLUME 32 BOOK 31 JULY 1987

OPTOELECTRONICS

EDITION 21
19,464 TYPES — 119 MANUFACTURERS

TABLE OF CONTENTS

Page

HOW TO USE THIS BOOK
English iv
German ix
French xiv
Spanish xix
Japanese xxiv

COMPONENT LOCATOR xxxii

GENERAL INFORMATION
General Terms And Definitions xxix
Explanation of Characteristics And Ratings xxx
Photometric/Radiometric: Terms, Symbols, Units xxxi
Common Optoelectronic Materials xxxi

TECHNICAL SECTION
1. **TYPE NO. CROSS INDEX** 1

EMITTERS
2. **LED LAMPS**
Red 40
Orange/Amber 55
Yellow 60
Green 69
Blue 78
Bicolor Lamps 78
Three-and Four-Color Lamps 79

3. **INFRARED LAMPS (IREDs)**
Devices to over 100 mW Optical Power 81

4. **LED & IRED ARRAYS**
IRED Array 89
Light Bar 89
Bar Graph & Lamp Arrays 91

5. **LASER DIODES**
Devices to 100W Pulsed Power 96

6-9. (Reserved)

SENSORS
10. **PHOTODIODES**
Avalanche Photodiode 99
Dewar Type Detector 99
Laser Detector 103
PIN Photodiode 103
Pyroelectric Detector 106
General-Purpose Photodiode 106
Blue-Optimized Photodiode 108
Eye-Response-Optimized Photodiode 109
Infrared Optimized-Photodiode 110
Ultraviolet-Optimized Photodiode 113

Continued

DISCLAIMER OF WARRANTIES: Although the information contained within this volume has been obtained from sources generally believed to be reliable, no warranty (expressed or implied) can be made as to its accuracy or completeness, nor is any responsibility assumed by the publisher or anyone connected with it for loss or damages suffered through reliance on any information contained in this volume. Specifically, no warranty of merchantability, fitness for a particular purpose or any other warranty is made or to be implied with respect to this volume, and no person has the authority to modify such limitation except in a writing signed by a corporate officer of the publisher. The acceptance of this manual is conditional on the acceptance of this disclaimer. If the buyer does not accept the terms of this disclaimer, return the manual within thirty (30) days and the publisher will refund any money advanced by the buyer toward the purchase of this manual.

OPTOELECTRONICS

TABLE OF CONTENTS, Continued

Page

11. **PHOTOTRANSISTORS**
N-channel PhotoJFET 115
NPN Bipolar 115

12. **PHOTODARLINGTONS**
NPN Photodarlington 121

13. **PHOTOTHYRISTORS**
Light Activated SCR (LASCR) 123
Photo Triac Driver 123

14. **PHOTOCIRCUITS**
Camera Controller 124
Opamp-Output 124
Optical-Receiver-Output 125
Schmitt-Trigger-Output 125
Transistor-Stage-Output 125

15. **PHOTODETECTOR LINEAR ARRAYS**
Photodiode Array 128
Phototransistor Array 129

16. **LIGHT DEPENDENT RESISTORS (LDRs)**
Light Dependent Resistor 130
"Photobridge" (LDR-based Position Sensor) 136
Photopotentiometer 136

17. **PHOTOVOLTAIC CELLS**
Infrared Detector 137
Light Detector, General-Purpose 137
Solar Cell 143
Tape/Card Reader Cell 144

18. **PHOTOVOLTAIC ARRAYS**
Power Converter Solar Array 146
Tape/Card Reader Cell Array 147

19. **GAP & REFLECTIVE SENSORS**
Emitter-Sensor Array 149
Gap Detector 149
Pyroelectric Detector 158
Reflective Scanner Module 158
Reflex Detector 159

20-24. (Reserved)

OPTOCOUPLERS

25. **OPTOCOUPLERS: PHOTOCELL OUTPUT**
LDR Output 161
Photovoltaic Output 163

26. **OPTOCOUPLER: PHOTOTRANSISTOR OUTPUT**
NPN Output 164

27. **OPTOCOUPLER: PHOTODARLINGTON**
NPN Output 169

28. **OPTOCOUPLERS: PHOTOTHYRISTOR OUTPUT**
SCR/Half Wave Output 171
Triac/Full Wave Output 171
Triac Driver Output 171

29. **OPTOCOUPLER: PHOTOCIRCUIT OUTPUT**
Amplifier-Output 173
Logic-Gate-Output 173
Schmitt-Trigger-Output 173
Transistor-Stage-Output 173

30-34. (Reserved)

Continued

OPTOELECTRONICS

TABLE OF CONTENTS, Continued — Page

DISPLAYS

35. **LED CHARACTER DISPLAYS**
    - Seven-segment Numeric 175
    - Segmented Alphanumeric 199
    - 5x7 Dot Matrix 199

    INTELLIGENT DISPLAYS
    - Seven-segment Numeric 201
    - Segmented Alphanumeric 201
    - 4x7 Dot Matrix 202
    - 5x7 Dot Matrix 202

36. **LCD DISPLAYS**
    - Seven-segment Numeric 204
    - Segmented Alphanumeric 219
    - 5x7 Dot Matrix 220
    - Other Configuration LCD Matrix 221
    - Bar Graph Display 222
    - LCD Display Shutter 223

37. **OTHER TECHNOLOGY DISPLAYS**
    - Electroluminescent Display 224
    - Gas Discharge Display 224
    - Incandescent Display 224
    - Vacuum Fluorescent Display 225

38-45. (Reserved)

SPECIAL DEVICES

46. **MISCELLANEOUS DEVICES**
    - Fiber Optics Receiver 231
    - Fiber Optics Transmitter 231
    - Fiber Optics Support 231
    - Image Sensor Array 232
    - Quadrant/Circular Detector 233
    - Light Pen 233
    - Optoelectronic Controller 233
    - Optical Rotary Encoder 233
    - Packaged Lamp 233
    - Additional Optoelectronic Devices 235

SUPPLEMENTARY SECTIONS

47. **TYPES WITH U.S. MILITARY SPECIFICATIONS** 237
48. **SCHEMATIC DRAWINGS** 239
    - Drawings/Lead Code Designations 239
    - Lead Code Identifications 239
49. **OUTLINE DRAWINGS** 415
50. **DEVICE NUMBERING KEYS** 1004
51. **MANUFACTURERS' LOGOS** 1015
52. **MANUFACTURERS' CODES, NAMES & ADDRESSES** 1024

INTERPRETER – Symbols & Codes Explained OE1

DRAWING INDEX OE28

EDITORIAL POLICY AND PROCEDURES

PURPOSE

This D.A.T.A.BOOK is designed to report comprehensively on what is presently being produced throughout the world in the field of Optoelectronic devices. While a publication such as this cannot provide 100% of the information you might need, its primary aim is to facilitate the selection of devices suitable to your technical requirements, and direct you to the sources of their manufacture.

TECHNICAL DATA ACQUISITION

D.A.T.A. acquires and processes the information presented in this D.A.T.A.BOOK with the cooperation of the participating manufacturers who supply us with their latest technical information. Manufacturers are not charged for the listing of their products. Manufacturers listed include those with capabilities ranging from device testing and grading, to complete wafer/chip processing operations.

JEDEC TYPES

The electrical, optical, mechanical and environmental characteristics tabulated for the standard 1N,2N and 4N type numbers are derived directly from the JEDEC registration releases. The particular manufacturer or manufacturers for whom such types are registered are so indicated by the use of a symbol next to their manufacturer codes in the Type No. Cross-Index. In general, the JEDEC-designated types produced by the various manufacturers, whether registered or not, do conform with the registered specifications. However, there may be exceptions, and it is recommended that the individual manufacturer be consulted.

SUBSTITUTE TYPES AND COMPATIBILITY

While this D.A.T.A.BOOK cannot truly claim to be an interchangeability guide, Optoelectronic devices with the same or similar characteristics are grouped together, thereby enabling the user to identify candidate alternate sources. The final authority for a replacement or alternate source is the manufacturer's catalog or datasheet.

PRICE AND AVAILABILITY

Because of the rapidly changing and complex nature of this field, current price and delivery information should be obtained directly from the manufacturers. The Manufacturers' Profile and the Sales Offices Listings in the back of the book will assist you in this.

MANUFACTURERS' SPECIFICATIONS

This book includes currently-manufactured devices and devices soon-to-be available with their major characteristics. Every effort is made to ensure the accuracy of the entries herein; however, the publisher cannot be held responsible nor guarantee against the possibility of error or omission. Only the manufacturers or their authorized representatives can provide you with complete technical details.

TWO BASIC WAYS:

	If you know:	And need to know:	Read:
1	Electrical & mechanical Requirements	A type number (Manufacturer's part number)	Explanation 1
2	A type number	The electrical and/or mechanical characteristics or its outline configuration or who manufactures it or an equivalent type	Explanation 2

EXPLANATION 1

If you know:
The electrical and mechanical requirements (including military):
And need to know:
A suitable type number:
First: Turn to the TABLE OF CONTENTS

a. Select from the Table of Contents the Technical Section corresponding to the known device type.
EXAMPLE: Technical Section 37.

TABLE OF CONTENTS — Page

36. **LCD DISPLAYS**
Seven-segment Numeric 203
Segmented Alphanumeric 218
5x7 Dot Matrix 219
Other Configuration LCD Matrix 221
Bar Graph Display 221
LCD Display Shutter 222

37. **OTHER TECHNOLOGY DISPLAYS**
Electroluminescent Display 223
Gas Discharge Display 223
Incandescent Display 224
Light Reflecting Display 225
Vacuum Fluorescent Display 225

b. Turn to that section. Locate the type number that is in general agreement with your requirements EXAMPLE: DIP851L. Because of the sequencing, similar types will appear together. Notice the sequencing parameters in top right corner of each page.

37. DISPLAY: OTHER TECHNOLOGY DISPLAYS

IN ORDER OF:(1)TYPE DISPLAY (2)NO. DIGITS (3)CHAR. HT. & (4) TYPE No.

LINE No.	4 TYPE No.	1 TYPE OF DIS-PLAY	2 NO. OF DIG ITS	3 CHAR. HGHT. (in)	COL -OR	D.C. VOLT (V)	D.C. CURR per seg (A)	POWER DISS. per seg	TEMP RNG. CODE - +	RESP TIME (S)	LUMINANCE Lv (fL)	LUMINANCE V SUPP. (V)	LIFE (hrs)	FEATURES	SCHEM -ATIC	DRAWING Ø-RND. Ø-RECT. Δ-STRIP *-CHIP
1	3015FBM	INC	1	360m	10	5.0	8.0m	40m	58		700	5.0	250k	7 Seg,Num	♦	PY135Ø
2	3015FBN10	INC	1	360m	10	5.0	10m	50m	58		1.7k	5.0	100k	7 Seg,Num	♦	PY135aØ
3	3015FBN15	INC	1	360m	10	5.0	15m	75m	58		4.5k	5.0	100k	7 Seg;Num		
4	3015FBN20	INC	1	360m	10	5.0	20m	100m	58		5.5k	5.0	100k	7 Seg;Num	♦	PY135aØ
5	3015FBN	INC	1	360m	10	5.0	8.0m	40m	58		700	5.0	250k	7 Seg,Num	♦	PY135aØ
6	3015G10	INC	1	360m	10	5.0	10m	50m			1.7k	5.0	100k	Plus,Minus,One,Decimal	♦	PY136Ø
7	3015G	INC	1	360m	10	5.0	8.0m	40m	58		700		250k	Plus,Minus,One Decimal	♦	PY136Ø
8	DIP850	INC	1	453m	10	5.0	17m	85m		24m	7.0k	5.0	100k	Digit	♦	PY132aØ
9	DIP851L	INC	1	453m	10	5.0	17m	85m		24m	7.0k	5.0	100k	Digit w/L.H. Dec.Pt	♦	PY132aØ
10	DIP851R	INC	1	453m	10	5.0	17m	85m		24m	7.0k	5.0	100k	Digit w/R.H. Dec.Pt	♦	PY132aØ
11	DIP852	INC	1	453m	10	5.0	17m	85m		24m	7.0k	5.0	100k	Digit w/Colon	♦	PY132aØ
12	GL-751RS	INC	1	.47	%	5.0	17m		58	24m	15k			Digit R.D.P.	EC4	PY120
13	GL-951RS	INC	1	.61	%	5.0	17m		58	24m	15k			Digit R.D.P.	EC6	PY121
14	DIP1050	INC	1	625m	10	5.0	17m	85m		28m	6.0k	5.0	100k	7-Seg Digital	♦	PY60p
15	DIP1050A	INC	1	625m	10	5.0	17m	85m		28m	6.0k	5.0	100k	16-Seg Alphanumeric	♦	PY133aØ
16	DIP1050PM-1	INC	1	625m	10	5.0	17m	85m		28m	6.0k	5.0	100k	Plus/Minus 1	♦	PY60p
17	DIP1051L	INC	1	625m	10	5.0	17m	85m		28m	6.0k	5.0	100k	7-Seg Dig Lf Hand Dec Pt	♦	PY60p
18	DIP1051R	INC	1	625m	10	5.0	17m	85m		28m	6.0k	5.0	100k	7-Seg Dig Rt Hand Dec Pt	♦	PY60p

Second: Turn to the TYPE NO. CROSS INDEX Section.

a. Find your selected type number DIP851L
b. Note manufacturers' code(s) to the right of device number. EXAMPLE: REC
c. Note page and line number. EXAMPLE: 187-9

1. TYPE No. CROSS INDEX

IN TYPE NUMBER SEQUENCE

TYPE No.	MFRS	Pg&Line	TYPE No.	MFRS	Pg&Line	TYPE No.	MFRS	Pg&Line	TYPE No.	MFRS	Pg&Line	TYPE No.	MFRS	Pg&Line
D352PK(A)	♦ALGG	150 - 98	DIP651L	♦REC	186 - 99	DM3000	♦REC	154 - 95	ED109RKW	♦SPR	35 - 76	ED740H	SPR	43 - 6
D353PA(A)	♦ALGG	150 - 99	DIP651R	♦REC	186 -100	DM3001	REC	154 - 96	ED110R	SPR	37 -100	ED740O	SPR	52 - 68
D353PK(A)	♦ALGG	150 -100	DIP652	♦REC	186 -101	DM6003	♦REC	155 - 24	ED110RK	SPR	37 -101	ED740P	SPR	64 - 12
D380PA	♦ALGG	143 - 5	DIP850	♦REC	187 - 8	DM6004	REC	155 - 25	ED113G	SPR	66 - 67	ED740R	SPR	39 -103
D380PK	♦ALGG	143	DIP850PM	♦REC	186 - 58	DM6009	REC	154 - 86	ED113R	SPR	37 -102	ED740Y	SPR	55 -104
D381PA	ALGG	143	DIP851L	♦REC	187 - 9	DM6010	REC	154 - 87	ED113Y	SPR	54 - 87	ED743A	SPR	50 - 56
D381PK	♦ALGG	143	DIP851R	♦REC	187 - 10	DM6015	REC	160 - 66	ED114G	SPR	61 -105	ED743G	SPR	64 - 13
D382PA	♦ALGG	143 - 78	DIP852	♦REC	187 - 11	DM6016	REC	160 - 67	ED114R	SPR	37 - 34	ED743H	SPR	43 - 7
D382PK	♦ALGG	143 - 79	DIP1050	♦REC	187 - 14	DM6021	REC	159 - 5	ED114Y	SPR	54 - 17	ED743O	SPR	50 - 57
D383PA	♦ALGG	143 - 80	DIP1050A	♦REC	187 - 15	DM6022	REC	159 - 6	ED115G	SPR	66 - 68	ED743P	SPR	64 - 14
D383PK	♦ALGG	143 - 81	DIP1050PM-1	♦REC	187 - 16	DM10348-03	♦REC	162 - 5	ED115R	SPR	37 -103	ED743R	SPR	39 -104
D390PA(A)	♦ALGG	143 - 82	DIP1051L	♦REC	187 - 17	DM10348-04	♦REC	155 - 21	ED116R	SPR	37 - 35	ED743Y	SPR	55 -105
D390PK(A)	♦ALGG	143 - 83	DIP1051R	♦REC	187 - 18	DMC16106A	♦OPCJ	182 - 96	ED120R	SPR	37 -104	ED744A	SPR	50 - 58
D391PA(A)	♦ALGG	143 - 84	DIP1052	♦REC	187 - 19	DMC16106B	♦OPCJ	183 -106	ED121G	SPR	61 - 27	ED744G	SPR	64 - 15
D391PK(A)	♦ALGG	143 - 85	DIR170	♦LAD	204 - 16	DMC16106C	♦OPCJ	183 -102	ED121R	SPR	35 - 77	ED744H	SPR	43 - 8
D392PA(A)	♦ALGG	143 - 86	DL48G	♦FREB	162 - 78	DMC16117	♦OPCJ	183 -103	ED122G	SPR	61 - 28	ED744O	SPR	50 - 59
D392PK(A)	♦ALGG	143 - 87	DL48R	♦FREB	162 - 79	DMC16207	♦OPCJ	183 -107	ED122R	SPR	35 - 78	ED744P	SPR	64 - 16
D393PA(A)	♦ALGG	143 - 88	DL51G	♦FREB	162 - 80	DMC20215	♦OPCJ	184 - 1	ED123G	♦SPR	60 - 55	ED744R	SPR	39 -105
D393PK(A)	♦ALGG	143 - 89	DL51R	♦FREB	162 - 81	DMC32216	♦OPCJ	183 - 97	ED123R	♦SPR	37 - 75	ED744Y	SPR	55 -106
D610P(A)	♦ALGG	79 - 87	DL330M	♦SIEX	158 - 29	DMC40209	♦OPCJ	183 - 99	ED123Y	♦SPR	53 - 52	ED746A	SPR	50 - 60
D620P(A)	♦ALGG	80 - 61	DL340M	♦SIEX	160 - 79	DMC40218	♦OPCJ	183 - 96	ED124G	♦SPR	60 - 2	ED746G	SPR	64 - 17
D630P(A)	♦ALGG	80 - 62	DL416	♦SIEX	161 - 47	DMF605	♦OPCJ	163 - 40	ED124R	♦SPR	37 - 12	ED746H	SPR	43 - 9

d. Turn to the MANUFACTURERS' CODES, & NAMES section
e. Locate manuacturers' code and name. EXAMPLE: REC

MANUFACTURERS' CODES & NAMES

	K8747	**PLOB**	Plessey Optoelectronics & Microwave, Wood Burcote Way, Towcester, Northamptonshire, U.K.
		QTC	Quantrad Corporation, 19900 So. Normandie Ave., Torrance, CA 90502
CRC	18714	**RCA**	RCA, Solid State Division, Route 202, Somerville, NJ 08876
	52923	**REA**	Readouts, Inc., P.O. Box 149, Del Mar, CA 92014
	28564	**REC**	Refac Electronics Corp., P.O. Box 809, Winsted, CT 06098
	56025	**RET**	EG&G Reticon Corp., 45 Williams St., Wellesley, MA 02181
		RKW	Rockwell Int'l Elec. Devices Div., 4311 Jamboree Rd., Newport Beach, CA 92660
	F1721	**RTCF** *	RTC-Compelec, 130 Avenue Ledru-Rollin, 75540 Paris Cedex 11, France
CRP	94144	**RTN**	Raytheon Company, 350 Ellis St., Mountain View, CA 94043
		SAI	Sanders Associates, Inc., 95 Canal St., Nashua, NH 03061
	S3385	**SAKJ**	Sanken Electric Co. Ltd., 1-22-8 Nishi Ikebukuro, Tokyo, Japan
	51522	**SAM**	Skan-A-Matic Corp., P.O. Box S, Route 5 West, Elbridge, NY 13060

EXPLANATION 2

If you know:
The type number
And need to know:
The electrical characteristics:
First:
Turn to the TYPE NUMBER CROSS INDEX and find your type number.

a. Note the page and line number beside your Type. EXAMPLE: 187-9

1. TYPE No. CROSS INDEX

IN TYPE NUMBER SEQUENCE

TYPE No.	MFRS	Pg&Line	TYPE No.	MFRS	Pg&Line	TYPE No.	MFRS	Pg&Line	TYPE No.	MFRS	Pg&Line	TYPE No.	MFRS	Pg&Line
D352PK(A)	♦ALGG	150 - 98	DIP651L	♦REC	186 - 99	DM3000	♦REC	154 - 95	ED109RKW	♦SPR	35 - 76	ED740H	SPR	43 - 6
D353PA(A)	♦ALGG	150 - 99	DIP651R	♦REC	186 -100	DM3001	REC	154 - 96	ED110R	SPR	37 -100	ED740O	SPR	52 - 68
D353PK(A)	♦ALGG	150 -100	DIP652	♦REC	186 -101	DM6003	♦REC	155 - 24	ED110RK	SPR	37 -101	ED740P	SPR	64 - 12
D380PA	♦ALGG	143 - 5	DIP850	♦REC	187 - 8	DM6004	REC	155 - 25	ED113G	SPR	66 - 67	ED740R	SPR	39 -103
D380PK	♦ALGG	143	DIP850PM	♦REC	186 - 58	DM6009	REC	154 - 86	ED113R	SPR	37 -102	ED740Y	SPR	55 -104
D381PA	ALGG	143	DIP851L	♦REC	187 - 9	DM6010	REC	154 - 87	ED113Y	SPR	54 - 87	ED743A	SPR	50 - 56
D381PK	♦ALGG	143	DIP851R	♦REC	187 - 10	DM6015	REC	160 - 66	ED114G	SPR	61 -105	ED743G	SPR	64 - 13
D382PA	♦ALGG	143 - 78	DIP852	♦REC	187 - 11	DM6016	REC	160 - 67	ED114R	SPR	37 - 34	ED743H	SPR	43 - 7
D382PK	♦ALGG	143 - 79	DIP1050	♦REC	187 - 14	DM6021	REC	159 - 5	ED114Y	SPR	54 - 17	ED743O	SPR	50 - 57
D383PA	♦ALGG	143 - 80	DIP1050A	♦REC	187 - 15	DM6022	REC	159 - 6	ED115G	SPR	66 - 68	ED743P	SPR	64 - 14
D383PK	♦ALGG	143 - 81	DIP1050PM-1	♦REC	187 - 16	DM10348-03	♦REC	162 - 5	ED115R	SPR	37 -103	ED743R	SPR	39 -104
D390PA(A)	♦ALGG	143 - 82	DIP1051L	♦REC	187 - 17	DM10348-04	♦REC	155 - 21	ED116R	SPR	37 - 35	ED743Y	SPR	55 -105
D390PK(A)	♦ALGG	143 - 83	DIP1051R	♦REC	187 - 18	DMC16106A	♦OPCJ	182 - 96	ED120R	SPR	37 -104	ED744A	SPR	50 - 58
D391PA(A)	♦ALGG	143 - 84	DIP1052	♦REC	187 - 19	DMC16106B	♦OPCJ	183 -106	ED121G	SPR	61 - 27	ED744G	SPR	64 - 15
D391PK(A)	♦ALGG	143 - 85	DIR170	♦LAD	204 - 16	DMC16106C	♦OPCJ	183 -102	ED121R	SPR	35 - 77	ED744H	SPR	43 - 8
D392PA(A)	♦ALGG	143 - 86	DL48G	♦FREB	162 - 78	DMC16117	♦OPCJ	183 -103	ED122G	SPR	61 - 28	ED744O	SPR	50 - 59
D392PK(A)	♦ALGG	143 - 87	DL48R	♦FREB	162 - 79	DMC16207	♦OPCJ	183 -107	ED122R	SPR	35 - 78	ED744P	SPR	64 - 16
D393PA(A)	♦ALGG	143 - 88	DL51G	♦FREB	162 - 80	DMC20215	♦OPCJ	184 - 1	ED123G	♦SPR	60 - 55	ED744R	SPR	39 -105
D393PK(A)	♦ALGG	143 - 89	DL51R	♦FREB	162 - 81	DMC32216	♦OPCJ	183 - 97	ED123R	♦SPR	37 - 75	ED744Y	SPR	55 -106
D610P(A)	♦ALGG	79 - 87	DL330M	♦SIEX	158 - 29	DMC40209	♦OPCJ	183 - 99	ED123Y	♦SPR	53 - 52	ED746A	SPR	50 - 60
D620P(A)	♦ALGG	80 - 61	DL340M	♦SIEX	160 - 79	DMC40218	♦OPCJ	183 - 96	ED124G	♦SPR	60 - 2	ED746G	SPR	64 - 17
D630P(A)	♦ALGG	80 - 62	DL416	♦SIEX	161 - 47	DMF605	♦OPCJ	163 - 40	ED124R	♦SPR	37 - 12	ED746H	SPR	43 - 9

b. Locate that page and line number, and you will find the electrical characteristics.
The outline drawing number PY132a is in the column and the drawings are listed sequentially in the Drawing Index. (See Table of Contents).

37. DISPLAY: OTHER TECHNOLOGY DISPLAYS

IN ORDER OF:(1)TYPE DISPLAY (2)NO. DIGITS (3)CHAR. HT. & (4) TYPE No.

LINE No.	4 TYPE No.	1 TYPE OF DISPLAY	2 NO. OF DIGITS	3 CHAR. HGHT. (in)	COL -OR	D.C. VOLT (V)	D.C. CURR per seg (A)	POWER DISS. per seg	TEMP RNG. CODE - +	RESP TIME (S)	LUMINANCE Lv (fL)	LUMINANCE V SUPP. (V)	LIFE (hrs)	FEATURES	SCHEM -ATIC	DRAWING Ø-RND. ⊠-RECT. Δ-STRIP *-CHIP
1	3015FBM	INC	1	360m	10	5.0	8.0m	40m	58		700	5.0	250k	7 Seg,Num	♦	PY135⊠
2	3015FBN10	INC	1	360m	10	5.0	10m	50m	58		1.7k	5.0	100k	7 Seg,Num	♦	PY135a⊠
3	3015FBN15	INC	1	360m	10	5.0	15m	75m	58		4.5k	5.0	100k	7 Seg;Num		
4	3015FBN20	INC	1	360m	10	5.0	20m	100m	58		5.5k	5.0	100k	7 Seg;Num	♦	PY135a⊠
5	3015FBN	INC	1	360m	10	5.0	8.0m	40m	58		700	5.0	250k	7 Seg,Num	♦	PY135a⊠
6	3015G10	INC	1	360m	10	5.0	10m	50m			1.7k	5.0	100k	Plus,Minus,One,Decimal	♦	PY136⊠
7	3015G	INC	1	360m	10	5.0	8.0m	40m	58		700		250k	Plus,Minus,One Decimal	♦	PY136⊠
8	DIP850	INC	1	453m	10	5.0	17m	85m		24m	7.0k	5.0	100k	Digit	♦	PY132a⊠
9	DIP851L	INC	1	453m	10	5.0	17m	85m		24m	7.0k	5.0	100k	Digit w/L.H. Dec.Pt	♦	PY132a⊠
10	DIP851R	INC	1	453m	10	5.0	17m	85m		24m	7.0k	5.0	100k	Digit w/R.H. Dec.Pt	♦	PY132a⊠
11	DIP852	INC	1	453m	10	5.0	17m	85m		24m	7.0k	5.0	100k	Digit w/Colon	♦	PY132a⊠
12	GL-751RS	INC	1	.47	%	5.0	17m		58	24m	15k			Digit R.D.P.	EC4	PY120

c. Locate the Outline drawing number in the Outline Drawing Index and note the page number listed. EXAMPLE: PY132a

DRAWING INDEX – OPTOELECTRONICS

OUTLINE DRAWINGS

DRAWING NO.	PAGE	DRAWING NO.	PAGE	DRAWING NO.	PAGE	DRAWING NO.	PAGE	DRAWING NO.	PAGE	DRAWING NO.	PAGE	DRAWING NO.	PAGE
PY129	652	PY281	663	PY488	678	PY584	691	PY639	703	PY740	714	PY830a	726
PY129a	652	PY281a	663	PY492	678	PY585	692	PY640	703	PY741	714	PY831	726
PY130	652	PY282	663	PY493	679	PY586	692	PY641	704	PY742	714	PY832	726
PY130a-g	652	PY292a-g	663	PY500	679	PY586a-c	692	PY641a-ap	704	PY743	715	PY840	727
PY132	653	PY302	663	PY501	679	PY569	692	PY642	705	PY744	715	PY851	727
PY132a	653	PY308	664	PY503	680	PY587	692	PY642a-bh	705	PY747	715	PY854	727
PY133	653	PY308a-c	664	PY505	680	PY587a	692	PY643	705	PY748	715	PY855	727
PY134	653	PY309	664	PY505a-d	680	PY588	693	PY643a-q	705	PY749	715	PY856	739
PY135	653	PY311	664	PY507	681	PY588a-d	693	PY644	706	PY749a	715	PY856a	739

d. Turn to page indicated and locate the drawing and dimensions.

49. OUTLINE DRAWINGS

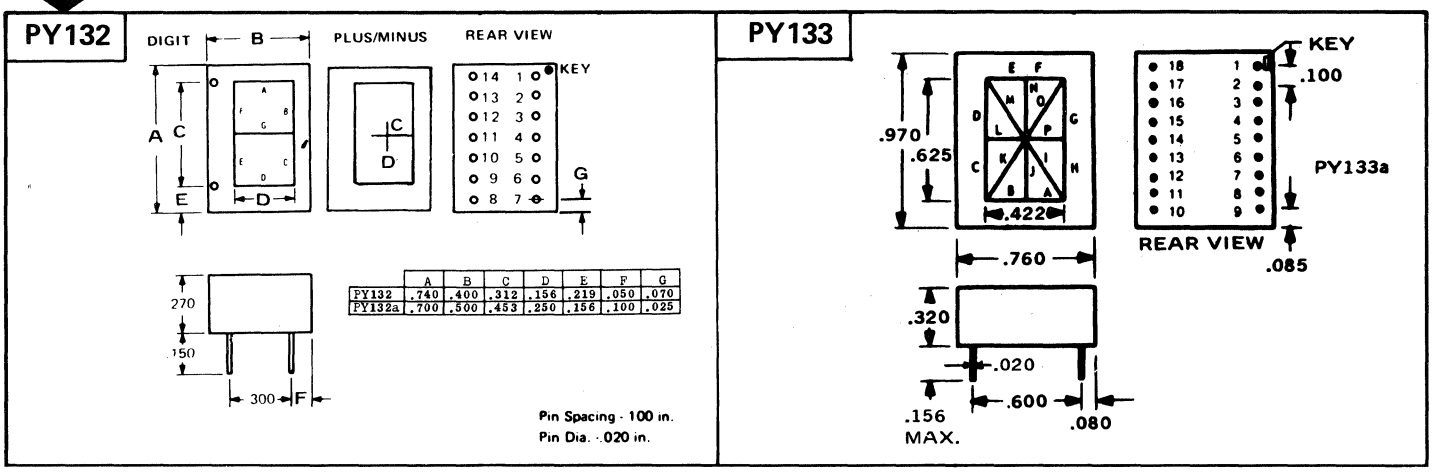

	A	B	C	D	E	F	G
PY132	.740	.400	.312	.156	.219	.050	.070
PY132a	.700	.500	.453	.250	.156	.100	.025

NOTE - Symbols and codes used in these technical sections are explained in the "Interpreter" pages at the back of the book.

DEFINITIONS OF TERMS

Interpreters and Definitions

This section defines column headings and symbols appearing in the Technical Sections of this book. Sorted alphabetically by field description, "Column Definitions" interprets the field titles and indicates the section usage.

SECTION 37 OTHER TECHNOLOGY DISPLAYS SECTION 37

37. OTHER TECHNOLOGY DISPLAYS

IN ORDER OF: (1) TYPE (2) CHAR. HEIGHT (3) No. CHAR. & (4) TYPE NUMBER

LINE No.	4 TYPE NUMBER	1 TYPE OF DIS-PLAY	3 NO. OF CHR ITS	2 CHAR. HGHT. (in)	COL -OR	D.C. VOLT (V)	D.C. CURR per seg (A)	PD per seg	TEMP RNG. CODE - +	RESP TIME (s)	LUMINANCE Lv (fL)	LUMINANCE V SUPP. (V)	LIFE (hrs)	FEATURES	SCHE-MATIC	DRAWING Ø-RND. ⊠-RECT. Δ-STRIP *-CHIP
✪		③	④	⑤	⑥	⑦	⑧	⑨	✪	⑪	⑫		⑭	⑮	✪	

③
ELL - Electroluminescent
GAS - Gas Discharge
INC - Incandescent
LTR - Light reflecting
VFD - Vacuum Fluorescent

† - Typical
* - See Dwg. for exact number of digits
♦- No. of characters per line/register. (see features)

⑦
* - AC
△ - Peak AC
§ - Peak pulse
# - Per Segment

- Total current
§ - Peak pulse

- Total power dissipation
⊠ - Max package dissipation

⑫
⊠ - Maximum
Ø- Minimum
* - Luminance (nt)
△ - Candelas (Luminous Int)
§ - Illuminance (fc)
$ - Total Radiated flux (lm)

$ - Number of operations

Alph - Alphanumeric
Hex - Hexadecimal

✪ SYMBOLS & CODES AT TOP OF FIRST INTERPRETER PAGE

INTERPRETER (Also See Symbols & Codes)

SYMBOLS: Symbols such as #,Δ, and $ are used in all columns, numeric or otherwise, whenever the data entries differ in some way from the entity defined in the column heading. For instance, if a given heading specifies Max. Power (in Watts) and the numeric value being entered for a given type represents the minimum power instead, the variance is denoted by the appearance of a special symbol alongside the numeric entry.

CODES: Codes are used in some columns as means to abbreviate the data being entered. The codes may be alphabetic (A,B,C, etc.) numeric (1,2,3 etc.) or some combination of both.

POWERS-OF-TEN MULTIPLIERS

The powers-of-ten multipliers shown below are used in numeric columns when the value being entered is many times greater or smaller than the units of measure indicated in the column heading. Usually, the latter are the so-called 'basic' units; such as V (volts), A (amperes) and s (seconds). The multipliers and an explanation of their use are given below:

EXPLANATION

Value of Data To Be Entered	Basic Unit In Column Heading	Actual Entry
3 milliamperes	A (amperes)	3.0m
9 megaohms	Ω (ohms)	9.0M
0.5 volt	V (volts)	500m*
10 amperes	A (amperes)	10

*May also be written as 0.5 with no multiplier

MULTIPLIERS

Power	Prefix	Symbol
10^{12}	tera	T
10^{9}	giga	G
10^{6}	mega	M
10^{3}	kilo	k
10^{-3}	milli	m
10^{-6}	micro	μ
10^{-9}	nano	n
10^{-12}	pico	p
10^{-15}	femto	f
10^{-18}	atto	a

SEQUENCING PARAMETERS

The arrangement of types in the technical sections is keyed to a set of special characteristics selected for their importance from among the general group of characteristics tabulated in each section. These selected characteristics or sequencing parameters differ from one section to another, and are identified at the top of each page as shown in the sample below.

The different types within a section are first arranged in ascending numeric (or alphabetic) order of the first such parameters. Groups of types having a common value for the first parameter are then arranged in ascending order of the second parameter. This process continues for each parameter in turn, up to and including the last parameter which, in every instance, is the type number itself. The final arrangement, by type number, is done in accordance with the sequencing of type numbers in the cross-index. The absence of an entry for any sequencing parameter is regarded as a zero and precedes any actual entries in the sequencing.

MAJOR CHARACTERISTICS — **SEQUENCING PARAMETERS**

37. DISPLAY: OTHER TECHNOLOGY DISPLAYS

IN ORDER OF:(1)TYPE DISPLAY (2)NO. DIGITS (3)CHAR. HT. & (4) TYPE No.

LINE No.	4 TYPE No.	1 TYPE OF DIS-PLAY	2 NO. OF DIG ITS	3 CHAR. HGHT. (in)	COL -OR	D.C. VOLT (V)	D.C. CURR per seg (A)	POWER DISS. per seg	TEMP RNG. CODE - +	RESP TIME (S)	LUMINANCE Lv (fL)	LUMINANCE V SUPP. (V)	LIFE (hrs)	FEATURES	SCHEM -ATIC	DRAWING Ø-RND. Ø-RECT. Δ-STRIP *-CHIP
1	3015FBM	INC	1	360m	10	5.0	8.0m	40m	58		700	5.0	250k	7 Seg,Num	♦	PY135Ø
2	3015FBN10	INC	1	360m	10	5.0	10m	50m	58		1.7k	5.0	100k	7 Seg,Num	♦	PY135aØ
3	3015FBN15	INC	1	360m	10	5.0	15m	75m	58		4.5k	5.0	100k	7 Seg;Num		
4	3015FBN20	INC	1	360m	10	5.0	20m	100m	58		5.5k	5.0	100k	7 Seg;Num	♦	PY135aØ
5	3015FBN	INC	1	360m	10	5.0	8.0m	40m	58		700	5.0	250k	7 Seg,Num	♦	PY135aØ
6	3015G10	INC	1	360m	10	5.0	10m	50m			1.7k	5.0	100k	Plus,Minus,One,Decimal	♦	PY136Ø

ZWEI GRUNDSÄTZLICHE MÖGLICHKEITEN:

	Wenn Sie schon wissen:	Und Sie möchten wissen:	Lesen Sie:
1	Die elektrischen und mechanischen Anforderungen	Eine Typennummer (Bestandteil Nummer des Herstellers)	Erklärung 1
2	Eine Typennummer	Die elektrischen und/oder mechanischen Merkmale oder die Au Benabmessungen oder den Hersteller oder eine Äquivalenztype	Erklärung 2

ERKLÄRUNG 1

Wenn Sie schon wissen:
Die elektrischen und mechanischen Anforderungen
Und Sie möchten wissen:
Eine geeignete Typennummer
Erstens:
Lesen Sie weiter bei TABLE OF CONTENTS

a. Wählen Sie aus dem Inhaltsverzeichnis den technischen Abschnitt aus der dem schon bekannten Bauteiltyp entspricht. BEISPIEL: Technischer Abschnitt **37.**

TABLE OF CONTENTS **Page**

36. **LCD DISPLAYS**
Seven-segment Numeric 203
Segmented Alphanumeric 218
5x7 Dot Matrix 219
Other Configuration LCD Matrix 221
Bar Graph Display 221
LCD Display Shutter 222

37. **OTHER TECHNOLOGY DISPLAYS**
Electroluminescent Display 223
Gas Discharge Display 223
Incandescent Display 224
Light Reflecting Display 225
Vacuum Fluorescent Display 225

b. Lesen Sie beim entsprechenden Abschnitt weiter. Ermitteln Sie die Typennummer, welche generell Ihren Anforderungen entspricht. BEISPIEL: **DIP851L.**

Auf Grund der gewählten Reihenfolge werden Sie ähnliche Typen in unmittelbarer Nachbarschaft angeführt finden.

Beachten Sie die Parameter für die gewählte Reihenfolge; diese sind in der oberen rechten Ecke auf jeder Seite angeführt.

37. DISPLAY: OTHER TECHNOLOGY DISPLAYS

IN ORDER OF:(1)TYPE DISPLAY (2)NO. DIGITS (3)CHAR. HT. & (4) TYPE No.

LINE No.	4 TYPE No.	1 TYPE OF DIS-PLAY	2 NO. OF DIG ITS	3 CHAR. HGHT. (in)	COL -OR	D.C. VOLT (V)	D.C. CURR per seg (A)	POWER DISS. per seg	TEMP RNG. CODE - +	RESP TIME (S)	LUMINANCE Lv (fL)	LUMINANCE V SUPP. (V)	LIFE (hrs)	FEATURES	SCHEM -ATIC	DRAWING Ø-RND. ⊠-RECT. Δ-STRIP *-CHIP
1	3015FBM	INC	1	360m	10	5.0	8.0m	40m	58		700	5.0	250k	7 Seg,Num	♦	PY135⊠
2	3015FBN10	INC	1	360m	10	5.0	10m	50m	58		1.7k	5.0	100k	7 Seg,Num	♦	PY135a⊠
3	3015FBN15	INC	1	360m	10	5.0	15m	75m	58		4.5k	5.0	100k	7 Seg;Num		
4	3015FBN20	INC	1	360m	10	5.0	20m	100m	58		5.5k	5.0	100k	7 Seg;Num	♦	PY135a⊠
5	3015FBN	INC	1	360m	10	5.0	8.0m	40m	58		700	5.0	250k	7 Seg,Num	♦	PY135a⊠
6	3015G10	INC	1	360m	10	5.0	10m	50m			1.7k	5.0	100k	Plus,Minus,One,Decimal	♦	PY136⊠
7	3015G	INC	1	360m	10	5.0	8.0m	40m	58		700		250k	Plus,Minus,One Decimal	♦	PY136⊠
8	DIP850	INC	1	453m	10	5.0	17m	85m		24m	7.0k	5.0	100k	Digit	♦	PY132a⊠
9	DIP851L	INC	1	453m	10	5.0	17m	85m		24m	7.0k	5.0	100k	Digit w/L.H. Dec.Pt	♦	PY132a⊠
10	DIP851R	INC	1	453m	10	5.0	17m	85m		24m	7.0k	5.0	100k	Digit w/R.H. Dec.Pt	♦	PY132a⊠
11	DIP852	INC	1	453m	10	5.0	17m	85m		24m	7.0k	5.0	100k	Digit w/Colon	♦	PY132a⊠
12	GL-751RS	INC	1	.47	%	5.0	17m		58	24m	15k			Digit R.D.P.	EC4	PY120
13	GL-951RS	INC	1	.61	%	5.0	17m		58	24m	15k			Digit R.D.P.	EC6	PY121
14	DIP1050	INC	1	625m	10	5.0	17m	85m		28m	6.0k	5.0	100k	7-Seg Digital	♦	PY60p
15	DIP1050A	INC	1	625m	10	5.0	17m	85m		28m	6.0k	5.0	100k	16-Seg Alphanumeric	♦	PY133a⊠

Zweitens:

Lesen Sie weiter beim Abschnitt TYPE NUMBER CROSS INDEX

a. Finden Sie Ihre gewählte Typennummer **DIP851L**

b. Beachten Sie den/die Hersteller-Code(s) rechts von der Bauteilnummer. BEISPIEL: **REC**

c. Beachten Sie die Seitenzahl und Zeilennummer. BEISPIEL: **187-9**

1. TYPE No. CROSS INDEX

IN TYPE NUMBER SEQUENCE

TYPE No.	MFRS	Pg&Line	TYPE No.	MFRS	Pg&Line	TYPE No.	MFRS	Pg&Line	TYPE No.	MFRS	Pg&Line	TYPE No.	MFRS	Pg&Line
D352PK(A)	♦ALGG	150 - 98	DIP651L	♦REC	186 - 99	DM3000	♦REC	154 - 95	ED109RKW	♦SPR	35 - 76	ED740H	SPR	43 - 6
D353PA(A)	♦ALGG	150 - 99	DIP651R	♦REC	186 -100	DM3001	REC	154 - 96	ED110R	SPR	37 -100	ED740O	SPR	52 - 68
D353PK(A)	♦ALGG	150 -100	DIP652	♦REC	186 -101	DM6003	♦REC	155 - 24	ED110RK	SPR	37 -101	ED740P	SPR	64 - 12
D380PA	♦ALGG	143 - 75	DIP850	♦REC	187 - 8	DM6004	REC	155 - 25	ED113G	SPR	66 - 67	ED740R	SPR	39 -103
D380PK	♦ALGG	143 - [illegible]	DIP850PM	♦REC	186 - 58	DM6009	REC	154 - 86	ED113R	SPR	37 -102	ED740Y	SPR	55 -104
D381PA	ALGG	143 - [illegible]	DIP851L	♦REC	187 - 9	DM6010	REC	154 - 87	ED113Y	SPR	54 - 87	ED743A	SPR	50 - 56
D381PK	♦ALGG	143 - [illegible]	DIP851R	♦REC	187 - 10	DM6015	REC	160 - 66	ED114G	SPR	61 -105	ED743G	SPR	64 - 13
D382PA	♦ALGG	143 - 78	DIP852	♦REC	187 - 11	DM6016	REC	160 - 67	ED114R	SPR	37 - 34	ED743H	SPR	43 - 7
D382PK	♦ALGG	143 - 79	DIP1050	♦REC	187 - 14	DM6021	REC	159 - 5	ED114Y	SPR	54 - 17	ED743O	SPR	50 - 57
D383PA	♦ALGG	143 - 80	DIP1050A	♦REC	187 - 15	DM6022	REC	159 - 6	ED115G	SPR	66 - 68	ED743P	SPR	64 - 14
D383PK	♦ALGG	143 - 81	DIP1050PM-1	♦REC	187 - 16	DM10348-03	♦REC	162 - 5	ED115R	SPR	37 -103	ED743R	SPR	39 -104
D390PA(A)	♦ALGG	143 - 82	DIP1051L	♦REC	187 - 17	DM10348-04	♦REC	155 - 21	ED116R	SPR	37 - 35	ED743Y	SPR	55 -105
D390PK(A)	♦ALGG	143 - 83	DIP1051R	♦REC	187 - 18	DMC16106A	♦OPCJ	182 - 96	ED120R	SPR	37 -104	ED744A	SPR	50 - 58
D391PA(A)	♦ALGG	143 - 84	DIP1052	♦REC	187 - 19	DMC16106B	♦OPCJ	183 -106	ED121G	SPR	61 - 27	ED744G	SPR	64 - 15
D391PK(A)	♦ALGG	143 - 85	DIR170	♦LAD	204 - 16	DMC16106C	♦OPCJ	183 -102	ED121R	SPR	35 - 77	ED744H	SPR	43 - 8
D392PA(A)	♦ALGG	143 - 86	DL48G	♦FREB	162 - 78	DMC16117	♦OPCJ	183 -103	ED122G	SPR	61 - 28	ED744O	SPR	50 - 59
D392PK(A)	♦ALGG	143 - 87	DL48R	♦FREB	162 - 79	DMC16207	♦OPCJ	183 -107	ED122R	SPR	35 - 78	ED744P	SPR	64 - 16
D393PA(A)	♦ALGG	143 - 88	DL51G	♦FREB	162 - 80	DMC20215	♦OPCJ	184 - 1	ED123G	♦SPR	60 - 55	ED744R	SPR	39 -105
D393PK(A)	♦ALGG	143 - 89	DL51R	♦FREB	162 - 81	DMC32216	♦OPCJ	183 - 97	ED123R	♦SPR	37 - 75	ED744Y	SPR	55 -106
D610P(A)	♦ALGG	79 - 87	DL330M	♦SIEX	158 - 29	DMC40209	♦OPCJ	183 - 99	ED123Y	♦SPR	53 - 52	ED746A	SPR	50 - 60
D620P(A)	♦ALGG	80 - 61	DL340M	♦SIEX	160 - 79	DMC40218	♦OPCJ	183 - 96	ED124G	♦SPR	60 - 2	ED746G	SPR	64 - 17
D630P(A)	♦ALGG	80 - 62	DL416	♦SIEX	161 - 47	DMF605	♦OPCJ	163 - 40	ED124R	♦SPR	37 - 12	ED746H	SPR	43 - 9

d. Fahren Sie fort mit dem Abschnitt MANUFACTURERS' CODES & NAMES.

e. Finden Sie den Hersteller-Code und -Namen. BEISPIEL: **REC**

MANUFACTURERS' CODES & NAMES

	K8747	**PLOB**	Plessey Optoelectronics & Microwave, Wood Burcote Way, Towcester, Northamptonshire, U.K.
		QTC	Quantrad Corporation, 19900 So. Normandie Ave., Torrance, CA 90502
CRC	18714	**RCA**	RCA, Solid State Division, Route 202, Somerville, NJ 08876
	52923	**REA**	Readouts, Inc., P.O. Box 149, Del Mar, CA 92014
	28564	**REC**	Refac Electronics Corp., P.O. Box 809, Winsted, CT 06098
	56025	**RET**	EG&G Reticon Corp., 45 Williams St., Wellesley, MA 02181
		RKW	Rockwell Int'l Elec. Devices Div., 4311 Jamboree Rd., Newport Beach, CA 92660
	F1721	**RTCF** *	RTC-Compelec, 130 Avenue Ledru-Rollin, 75540 Paris Cedex 11, France
CRP	94144	**RTN**	Raytheon Company, 350 Ellis St., Mountain View, CA 94043
		SAI	Sanders Associates, Inc., 95 Canal St., Nashua, NH 03061
	S3385	**SAKJ**	Sanken Electric Co. Ltd., 1-22-8 Nishi Ikebukuro, Tokyo, Japan
	51522	**SAM**	Skan-A-Matic Corp., P.O. Box S, Route 5 West, Elbridge, NY 13060

ERKLÄRUNG 2

Wenn Sie schon wissen:

Die Typennummer

Und Sie möchten wissen:

Die elektrischen Merkmale

Erstens:

Fahren Sie fort mit TYPE NUMBER CROSS INDEX und finden Sie dort Ihre Typennummer.

a. Merken Sie sich die Seitenzahl und Zeilennummer neben Ihrer Type. BEISPIEL: **187-9**

1. TYPE No. CROSS INDEX

IN TYPE NUMBER SEQUENCE

TYPE No.	MFRS	Pg&Line	TYPE No.	MFRS	Pg&Line	TYPE No.	MFRS	Pg&Line	TYPE No.	MFRS	Pg&Line	TYPE No.	MFRS	Pg&Line
D352PK(A)	♦ALGG	150 - 98	DIP651L	♦REC	186 - 99	DM3000	♦REC	154 - 95	ED109RKW	♦SPR	35 - 76	ED740H	SPR	43 - 6
D353PA(A)	♦ALGG	150 - 99	DIP651R	♦REC	186 -100	DM3001	REC	154 - 96	ED110R	SPR	37 -100	ED740O	SPR	52 - 68
D353PK(A)	♦ALGG	150 -100	DIP652	♦REC	186 -101	DM6003	♦REC	155 - 24	ED110RK	SPR	37 -101	ED740P	SPR	64 - 12
D380PA	♦ALGG	143 - 5	DIP850	♦REC	187 - 8	DM6004	REC	155 - 25	ED113G	SPR	66 - 67	ED740R	SPR	39 -103
D380PK	♦ALGG	143 - [illegible]	DIP850PM	♦REC	186 - 58	DM6009	REC	154 - 86	ED113R	SPR	37 -102	ED740Y	SPR	55 -104
D381PA	ALGG	143 - [illegible]	DIP851L	♦REC	187 - 9	DM6010	REC	154 - 87	ED113Y	SPR	54 - 87	ED743A	SPR	50 - 56
D381PK	♦ALGG	143 - [illegible]	DIP851R	♦REC	187 - 10	DM6015	REC	160 - 66	ED114G	SPR	61 -105	ED743G	SPR	64 - 13
D382PA	♦ALGG	143 - 78	DIP852	♦REC	187 - 11	DM6016	REC	160 - 67	ED114R	SPR	37 - 34	ED743H	SPR	43 - 7
D382PK	♦ALGG	143 - 79	DIP1050	♦REC	187 - 14	DM6021	REC	159 - 5	ED114Y	SPR	54 - 17	ED743O	SPR	50 - 57
D383PA	♦ALGG	143 - 80	DIP1050A	♦REC	187 - 15	DM6022	REC	159 - 6	ED115G	SPR	66 - 68	ED743P	SPR	64 - 14
D383PK	♦ALGG	143 - 81	DIP1050PM-1	♦REC	187 - 16	DM10348-03	♦REC	162 - 5	ED115R	SPR	37 -103	ED743R	SPR	39 -104
D390PA(A)	♦ALGG	143 - 82	DIP1051L	♦REC	187 - 17	DM10348-04	♦REC	155 - 21	ED116R	SPR	37 - 35	ED743Y	SPR	55 -105
D390PK(A)	♦ALGG	143 - 83	DIP1051R	♦REC	187 - 18	DMC16106A	♦OPCJ	182 - 96	ED120R	SPR	37 -104	ED744A	SPR	50 - 58
D391PA(A)	♦ALGG	143 - 84	DIP1052	♦REC	187 - 19	DMC16106B	♦OPCJ	183 -106	ED121G	SPR	61 - 27	ED744G	SPR	64 - 15
D391PK(A)	♦ALGG	143 - 85	DIR170	♦LAD	204 - 16	DMC16106C	♦OPCJ	183 -102	ED121R	SPR	35 - 77	ED744H	SPR	43 - 8
D392PA(A)	♦ALGG	143 - 86	DL48G	♦FREB	162 - 78	DMC16117	♦OPCJ	183 -103	ED122G	SPR	61 - 28	ED744O	SPR	50 - 59
D392PK(A)	♦ALGG	143 - 87	DL48R	♦FREB	162 - 79	DMC16207	♦OPCJ	183 -107	ED122R	SPR	35 - 78	ED744P	SPR	64 - 16
D393PA(A)	♦ALGG	143 - 88	DL51G	♦FREB	162 - 80	DMC20215	♦OPCJ	184 - 1	ED123G	♦SPR	60 - 55	ED744R	SPR	39 -105
D393PK(A)	♦ALGG	143 - 89	DL51R	♦FREB	162 - 81	DMC32216	♦OPCJ	183 - 97	ED123R	♦SPR	37 - 75	ED744Y	SPR	55 -106
D610P(A)	♦ALGG	79 - 87	DL330M	♦SIEX	158 - 29	DMC40209	♦OPCJ	183 - 99	ED123Y	♦SPR	53 - 52	ED746A	SPR	50 - 60
D620P(A)	♦ALGG	80 - 61	DL340M	♦SIEX	160 - 79	DMC40218	♦OPCJ	183 - 96	ED124G	♦SPR	60 - 2	ED746G	SPR	64 - 17
D630P(A)	♦ALGG	80 - 62	DL416	♦SIEX	161 - 47	DMF605	♦OPCJ	163 - 40	ED124R	♦SPR	37 - 12	ED746H	SPR	43 - 9

b. Wenn Sie die entsprechende Seite aufschlagen, werden Sie bei der angegebenen Zeilennummer die elektrischen Merkmale finden. Die Nummer für die Zeichnung der AuBenabmessung des Bauteiles, und MP1380b ist in der letzten Kolonne angegeben, während die Zeichnungen selbst der Reihenfolge nach im "Drawing Index" angeführt sind. (Siehe Inhaltsverzeichnis.)

37. DISPLAY: OTHER TECHNOLOGY DISPLAYS

IN ORDER OF:(1)TYPE DISPLAY (2)NO. DIGITS (3)CHAR. HT. & (4) TYPE No.

LINE No.	4 TYPE No.	1 TYPE OF DIS-PLAY	2 NO. OF DIG ITS	3 CHAR. HGHT. (in)	COL -OR	D.C. VOLT (V)	D.C. CURR per seg (A)	POWER DISS. per seg	TEMP RNG. CODE - +	RESP TIME (S)	LUMINANCE Lv (fL)	LUMINANCE V SUPP. (V)	LIFE (hrs)	FEATURES	SCHEM -ATIC	DRAWING Ø-RND. ⊠-RECT. Δ-STRIP *-CHIP
1	3015FBM	INC	1	360m	10	5.0	8.0m	40m	58		700	5.0	250k	7 Seg,Num	♦	PY135⊠
2	3015FBN10	INC	1	360m	10	5.0	10m	50m	58		1.7k	5.0	100k	7 Seg,Num	♦	PY135a⊠
3	3015FBN15	INC	1	360m	10	5.0	15m	75m	58		4.5k	5.0	100k	7 Seg;Num		
4	3015FBN20	INC	1	360m	10	5.0	20m	100m	58		5.5k	5.0	100k	7 Seg;Num	♦	PY135a⊠
5	3015FBN	INC	1	360m	10	5.0	8.0m	40m	58		700	5.0	250k	7 Seg,Num	♦	PY135a⊠
6	3015G10	INC	1	360m	10	5.0	10m	50m			1.7k	5.0	100k	Plus,Minus,One,Decimal	♦	PY136⊠
7	3015G	INC	1	360m	10	5.0	8.0m	40m	58		700		250k	Plus,Minus,One Decimal	♦	PY136⊠
8	DIP850	INC	1	453m	10	5.0	17m	85m		24m	7.0k	5.0	100k	Digit	♦	PY132a⊠
9	DIP851L	INC	1	453m	10	5.0	17m	85m		24m	7.0k	5.0	100k	Digit w/L.H. Dec.Pt	♦	PY132a⊠

c. Nachdem Sie die Nummer für die Zeichnung der Außenabmessungen im "Outline Drawing Index" gefunden haben, merken Sie sich die angeführte Seitenzahl. BEISPIEL: **PY132a**

DRAWING INDEX – OPTOELECTRONICS

OUTLINE DRAWINGS

DRAWING NO.	PAGE	DRAWING NO.	PAGE	DRAWING NO.	PAGE	DRAWING NO.	PAGE	DRAWING NO.	PAGE	DRAWING NO.	PAGE	DRAWING NO.	PAGE
PY129	652	PY281	663	PY488	678	PY584	691	PY639	703	PY740	714	PY830a	726
PY129a	652	PY281a	663	PY492	678	PY585	692	PY640	703	PY741	714	PY831	726
PY130	652	PY282	663	PY493	679	PY586	692	PY641	704	PY742	714	PY832	726
PY130a-g	652	PY292a-g	663	PY500	679	PY586a-c	692	PY641a-ap	704	PY743	715	PY840	727
PY132	653	PY302	663	PY501	679	PY569	692	PY642	705	PY744	715	PY851	727
PY132a	653	PY308	664	PY503	680	PY587	692	PY642a-bh	705	PY747	715	PY854	727
PY133	653	PY308a-c	664	PY505	680	PY587a	692	PY643	705	PY748	715	PY855	727
PY134	653	PY309	664	PY505a-d	680	PY588	693	PY643a-q	705	PY749	715	PY856	739
PY135	653	PY311	664	PY507	681	PY588a-d	693	PY644	706	PY749a	715	PY856a	739

d. Auf der angeführten Seite finden Sie dann die gewünschte Schaltskizze.

49. OUTLINE DRAWINGS

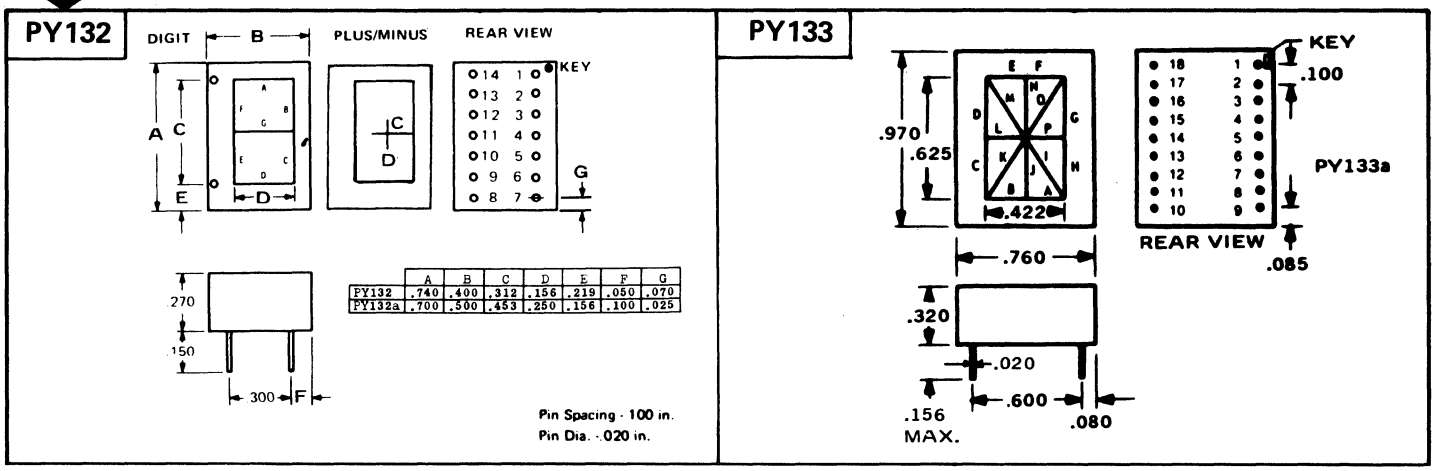

	A	B	C	D	E	F	G
PY132	.740	.400	.312	.156	.219	.050	.070
PY132a	.700	.500	.453	.250	.156	.100	.025

HINWEIS – Die in diesen technischen Abschnitten verwandten Symbole und Codes sind am Ende des Buches unter "Interpreter" erklärt.

BEGRIFFSDEFINITIONEN

ERLÄUTERUNGEN UND DEFINITIONEN

In diesem Abschnitt werden die Kolonnenüberschriften und Symbole, welche in den technischen Abschnitten dieses Buches erscheinen, definiert. Mit den in alphabetischer Reihenfolge angeordneten Anwendungsbereichen der Bauteile, werden unter "Column Definitions" die Kolonnenüberschriften erklärt und der Gebrauch der einzelnen Abschnitte erläutert.

SECTION 37 OTHER TECHNOLOGY DISPLAYS SECTION 37

37. OTHER TECHNOLOGY DISPLAYS

IN ORDER OF: (1) TYPE (2) CHAR. HEIGHT (3) No. CHAR. & (4) TYPE NUMBER

LINE No.	4 TYPE NUMBER	1 TYPE OF DIS-PLAY	3 NO. OF CHR ITS	2 CHAR. HGHT. (in)	COL -OR	D.C. VOLT (V)	D.C. CURR per seg (A)	PD per seg	TEMP RNG. CODE - +	RESP TIME (s)	LUMINANCE Lv (fL)	LUMINANCE V SUPP. (V)	LIFE (hrs)	FEATURES	SCHE-MATIC	DRAWING Ø-RND. ⊠-RECT. Δ-STRIP *-CHIP
✪		③	④	⑤	⑥	⑦	⑧	⑨	✪	⑪	⑫		⑭	⑮	✪	

③
ELL - Electroluminescent
GAS - Gas Discharge
INC - Incandescent
LTR - Light reflecting
VFD - Vacuum Fluorescent

† - Typical
* - See Dwg. for exact number of digits
♦ - No. of characters per line/register. (see features)

⑦
* - AC
△ - Peak AC
§ - Peak pulse
# - Per Segment

- Total current
§ - Peak pulse

- Total power dissipation
⊠ - Max package dissipation

⑫
⊠ - Maximum
Ø - Minimum
* - Luminance (nt)
△ - Candelas (Luminous Int)
§ - Illuminance (fc)
$ - Total Radiated flux (lm)

$ - Number of operations

Alph - Alphanumeric
Hex - Hexadecimal

✪ SYMBOLS & CODES AT TOP OF FIRST INTERPRETER PAGE

ERLÄUTERUNGEN (siehe auch Symbole & Codes)

SYMBOLE: Symbole wie #, ▲, und $ werden in allen Kolonnen verwendet, wenn immer sich die Eintragungen in irgendeiner Weise von den in den Kolonnentiteln definierten unterscheiden, gleichgültig ob diese von numerischer oder anderer Natur sind. Zum Beispiel, ist der gegebene Titel definiert als "Max. Power (in Watts)" und der eingetragene numerische Wert repräsentiert aber die Minimalleistung, so wird diese Abweichung durch ein spezielles Symbol neben der numerischen Eintragung gekennzeichnet.

CODES: Codes werden in manchen Kolonnen benutzt um eingetragene Daten abzukürzen. Diese Codes können alphabetischer (A, B, C etc.), numerischer (1, 2, 3 etc.) Natur oder auch eine Kombination aus beiden sein.

MULTIPLIKATIONSFAKTOREN FÜR ZEHNERPOTENZEN

Die Multiplikationsfaktoren für Zehnerpotenzen, die im Folgenden angeführt sind, werden dann in numerischen Kolonnen gebraucht wenn der eingetragene Wert viele Male größer oder kleiner ist als die Maßeinheit welche im Kolonnentitel angegeben ist. Diese sind normalerweise die sogenannten Grundeinheiten wie V (Volt), A (Ampere) und s (Sekunden). Die Multiplikationsfaktoren und eine Erklärung für ihren Gebrauch sind wie folgt:

ERKLÄRUNG

Einzutragender Zahlenwert	Grundeinheit im Kolonnentitel	Tatsächliche Eintragung
3 milliamperes	A (amperes)	3.0m
9 megaohms	Ω (ohms)	9.0M
0.5 volt	V (volts)	500m *
10 amperes	A (amperes)	10

*Kann auch mit 0.5 ohne Multiplikator angegeben sein.

MULTIPLIKATOREN

Zehnerpotenz	Präfix	Symbol
10^{12}	tera	T
10^{9}	giga	G
10^{6}	mega	M
10^{3}	kilo	k
10^{-3}	milli	m
10^{-6}	micro	µ
10^{-9}	nano	n
10^{-12}	pico	p
10^{-15}	femto	f
10^{-18}	atto	a

SEQUENZ-BESTIMMENDE PARAMETER

Die Reihenfolge der angeführten Typen in den technischen Abschnitten ist durch eine Gruppe von speziellen Merkmalen bestimmt, welche nach ihrer Wichtigkeit unter den angegebenen allgemeinen Merkmalen eines Abschnittes ausgewählt wurden. Diese gewählten Merkmale oder Sequenz-Parameter unterscheiden sich von einem Abschnitt zum anderen und sind am Kopf jeder Seite, wie das Beispiel unten zeigt, identifiziert.

Die verschiedenen Typen innerhalb eines Abschnittes sind zuerst in steigender numerischer (oder alphabetischer) Reihenfolge des ersten Parameters angeordnet. Jene Gruppe von Typen, welche einen gemeinsamen Wert für den ersten Parameter aufweist, ist in steigender Reihenfolge des zweiten Parameters angeführt. Dieser Prozess setzt sich für jeden einzelnen Parameter der Reihe nach fort bis einschließlich des letzten welcher dann in jedem Fall die Typennummer selbst ist. Die endgültige Anordnung nach Typennummern ist in Übereinstimmung mit der im "Cross Index" verwandten Reihenfolge. Das Fehlen einer Eintragung für einen Sequenz-Parameter wird als Null gewertet und wird deshalb allen anderen tatsächlichen Eintragungen in der Reihenfolge vorangestellt.

MAJOR CHARACTERISTICS — SEQUENCING PARAMETERS

37. DISPLAY: OTHER TECHNOLOGY DISPLAYS

IN ORDER OF:(1)TYPE DISPLAY (2)NO. DIGITS (3)CHAR. HT. & (4) TYPE No.

LINE No.	4 TYPE No.	1 TYPE OF DIS-PLAY	2 NO. OF DIG ITS	3 CHAR. HGHT. (in)	COL -OR	D.C. VOLT (V)	D.C. CURR per seg (A)	POWER DISS. per seg	TEMP RNG. CODE - +	RESP TIME (S)	LUMINANCE Lv (fL)	LUMINANCE V SUPP. (V)	LIFE (hrs)	FEATURES	SCHEM -ATIC	DRAWING Ø-RND. Ø-RECT. Δ-STRIP *-CHIP
1	3015FBM	INC	1	360m	10	5.0	8.0m	40m	58		700	5.0	250k	7 Seg,Num	♦	PY135Ø
2	3015FBN10	INC	1	360m	10	5.0	10m	50m	58		1.7k	5.0	100k	7 Seg,Num	♦	PY135aØ
3	3015FBN15	INC	1	360m	10	5.0	15m	75m	58		4.5k	5.0	100k	7 Seg;Num		
4	3015FBN20	INC	1	360m	10	5.0	20m	100m	58		5.5k	5.0	100k	7 Seg;Num	♦	PY135aØ
5	3015FBN	INC	1	360m	10	5.0	8.0m	40m	58		700	5.0	250k	7 Seg,Num	♦	PY135aØ
6	3015G10	INC	1	360m	10	5.0	10m	50m			1.7k	5.0	100k	Plus,Minus,One,Decimal	♦	PY136Ø

DEUX FACONS DE BASE:

	Si vous connaissez:	Et avez besoin de connaître:	Lisez:
1	Les caractéristiques électriques et mécaniques requises	La reference du produit (reference du fabricant)	Explication N° 1
2	La reference Du produit	Les caractéristiques mécaniques et/ou électriques ou sa configuration d'encombrement ou le fabricant ou un modele equivalent	Explication N° 2

EXPLICATION 1

Si vous connaissez:
Les caractéristiques électriques et mécaniques requises
Et avez besoin de connaître:
La référence du produit approprié.
Premièrement:
Reportez-vous a la page de TABLE OF CONTENTS

a. Recherchez dans la Table des Matières la section technique correspondante au type de systéme connu. EXEMPLE: Section Technique **37.**

TABLE OF CONTENTS **Page**

36. **LCD DISPLAYS**
Seven-segment Numeric 203
Segmented Alphanumeric 218
5x7 Dot Matrix 219
Other Configuration LCD Matrix 221
Bar Graph Display 221
LCD Display Shutter 222

37. **OTHER TECHNOLOGY DISPLAYS**
Electroluminescent Display 223
Gas Discharge Display 223
Incandescent Display 224
Light Reflecting Display 225
Vacuum Fluorescent Display 225

b. Allez à la page de cette section. Trouvez la reference du produit qui correspond globalement à vos caractéristiques requises. EXEMPLE: **DIP851L.**
A cause du classement séquentiel des genres similaires apparaîtront ensemble.

Notez les paramètres de classement séquentiel dans le coin supérieur à droite de chaque page.

37. DISPLAY: OTHER TECHNOLOGY DISPLAYS

IN ORDER OF:(1)TYPE DISPLAY (2)NO. DIGITS (3)CHAR. HT. & (4) TYPE No.

LINE No.	4 TYPE No.	1 TYPE OF DIS-PLAY	2 NO. OF DIG ITS	3 CHAR. HGHT. (in)	COL -OR	D.C. VOLT (V)	D.C. CURR per seg (A)	POWER DISS. per seg	TEMP RNG. CODE - +	RESP TIME (S)	LUMINANCE Lv (fL)	LUMINANCE V SUPP. (V)	LIFE (hrs)	FEATURES	SCHEM -ATIC	DRAWING Ø-RND. Ø-RECT. Δ-STRIP *-CHIP
1	3015FBM	INC	1	360m	10	5.0	8.0m	40m	58		700	5.0	250k	7 Seg,Num	♦	PY135Ø
2	3015FBN10	INC	1	360m	10	5.0	10m	50m	58		1.7k	5.0	100k	7 Seg,Num	♦	PY135aØ
3	3015FBN15	INC	1	360m	10	5.0	15m	75m	58		4.5k	5.0	100k	7 Seg;Num		
4	3015FBN20	INC	1	360m	10	5.0	20m	100m	58		5.5k	5.0	100k	7 Seg;Num	♦	PY135aØ
5	3015FBN	INC	1	360m	10	5.0	8.0m	40m	58		700	5.0	250k	7 Seg,Num	♦	PY135aØ
6	3015G10	INC	1	360m	10	5.0	10m	50m			1.7k	5.0	100k	Plus,Minus,One,Decimal	♦	PY136Ø
7	3015G	INC	1	360m	10	5.0	8.0m	40m	58		700		250k	Plus,Minus,One Decimal	♦	PY136Ø
8	DIP850	INC	1	453m	10	5.0	17m	85m		24m	7.0k	5.0	100k	Digit	♦	PY132aØ
9	DIP851L	INC	1	453m	10	5.0	17m	85m		24m	7.0k	5.0	100k	Digit w/L.H. Dec.Pt	♦	PY132aØ
10	DIP851R	INC	1	453m	10	5.0	17m	85m		24m	7.0k	5.0	100k	Digit w/R.H. Dec.Pt	♦	PY132aØ
11	DIP852	INC	1	453m	10	5.0	17m	85m		24m	7.0k	5.0	100k	Digit w/Colon	♦	PY132aØ
12	GL-751RS	INC	1	.47	%	5.0	17m		58	24m	15k			Digit R.D.P.	EC4	PY120
13	GL-951RS	INC	1	.61	%	5.0	17m		58	24m	15k			Digit R.D.P.	EC6	PY121
14	DIP1050	INC	1	625m	10	5.0	17m	85m		28m	6.0k	5.0	100k	7-Seg Digital	♦	PY60p
15	DIP1050A	INC	1	625m	10	5.0	17m	85m		28m	6.0k	5.0	100k	16-Seg Alphanumeric	♦	PY133aØ

Deuxièmement:

Reportez-vous à la page de la section TYPE NUMBER CROSS INDEX.

a. Trouvez la reference du produit choisie **DIP851L**

b. Notez le/les codes de fabricants à droite du numéro de dispositif. EXEMPLE: **REC**

c. Notez les numéros de page et de ligne. EXEMPLE: **187-9**

1. TYPE No. CROSS INDEX

IN TYPE NUMBER SEQUENCE

TYPE No.	MFRS	Pg&Line	TYPE No.	MFRS	Pg&Line	TYPE No.	MFRS	Pg&Line	TYPE No.	MFRS	Pg&Line	TYPE No.	MFRS	Pg&Line
D352PK(A)	♦ALGG	150 - 98	DIP651L	♦REC	186 - 99	DM3000	♦REC	154 - 95	ED109RKW	♦SPR	35 - 76	ED740H	SPR	43 - 6
D353PA(A)	♦ALGG	150 - 99	DIP651R	♦REC	186 -100	DM3001	REC	154 - 96	ED110R	SPR	37 -100	ED740O	SPR	52 - 68
D353PK(A)	♦ALGG	150 -100	DIP652	♦REC	186 -101	DM6003	♦REC	155 - 24	ED110RK	SPR	37 -101	ED740P	SPR	64 - 12
D380PA	♦ALGG	143 - 5	DIP850	♦REC	187 - 8	DM6004	REC	155 - 25	ED113G	SPR	66 - 67	ED740R	SPR	39 -103
D380PK	♦ALGG	143	DIP850PM	♦REC	186 - 58	DM6009	REC	154 - 86	ED113R	SPR	37 -102	ED740Y	SPR	55 -104
D381PA	ALGG	143	DIP851L	♦REC	187 - 9	DM6010	REC	154 - 87	ED113Y	SPR	54 - 87	ED743A	SPR	50 - 56
D381PK	♦ALGG	143	DIP851R	♦REC	187 - 10	DM6015	REC	160 - 66	ED114G	SPR	61 -105	ED743G	SPR	64 - 13
D382PA	♦ALGG	143 - 78	DIP852	♦REC	187 - 11	DM6016	REC	160 - 67	ED114R	SPR	37 - 34	ED743H	SPR	43 - 7
D382PK	♦ALGG	143 - 79	DIP1050	♦REC	187 - 14	DM6021	REC	159 - 5	ED114Y	SPR	54 - 17	ED743O	SPR	50 - 57
D383PA	♦ALGG	143 - 80	DIP1050A	♦REC	187 - 15	DM6022	REC	159 - 6	ED115G	SPR	66 - 68	ED743P	SPR	64 - 14
D383PK	♦ALGG	143 - 81	DIP1050PM-1	♦REC	187 - 16	DM10348-03	♦REC	162 - 5	ED115R	SPR	37 -103	ED743R	SPR	39 -104
D390PA(A)	♦ALGG	143 - 82	DIP1051L	♦REC	187 - 17	DM10348-04	♦REC	155 - 21	ED116R	SPR	37 - 35	ED743Y	SPR	55 -105
D390PK(A)	♦ALGG	143 - 83	DIP1051R	♦REC	187 - 18	DMC16106A	♦OPCJ	182 - 96	ED120R	SPR	37 -104	ED744A	SPR	50 - 58
D391PA(A)	♦ALGG	143 - 84	DIP1052	♦REC	187 - 19	DMC16106B	♦OPCJ	183 -106	ED121G	SPR	61 - 27	ED744G	SPR	64 - 15
D391PK(A)	♦ALGG	143 - 85	DIR170	♦LAD	204 - 16	DMC16106C	♦OPCJ	183 -102	ED121R	SPR	35 - 77	ED744H	SPR	43 - 8
D392PA(A)	♦ALGG	143 - 86	DL48G	♦FREB	162 - 78	DMC16117	♦OPCJ	183 -103	ED122G	SPR	61 - 28	ED744O	SPR	50 - 59
D392PK(A)	♦ALGG	143 - 87	DL48R	♦FREB	162 - 79	DMC16207	♦OPCJ	183 -107	ED122R	SPR	35 - 78	ED744P	SPR	64 - 16
D393PA(A)	♦ALGG	143 - 88	DL51G	♦FREB	162 - 80	DMC20215	♦OPCJ	184 - 1	ED123G	♦SPR	60 - 55	ED744R	SPR	39 -105

d. Allez à la page de la section MANUFACTURERS CODES AND NAMES.

e. Trouvez le nom et le code du fabricant. EXEMPLE: **REC**

MANUFACTURERS' CODES & NAMES

	K8747	**PLOB**		Plessey Optoelectronics & Microwave, Wood Burcote Way, Towcester, Northamptonshire, U.K.
		QTC		Quantrad Corporation, 19900 So. Normandie Ave., Torrance, CA 90502
CRC	18714	**RCA**		RCA, Solid State Division, Route 202, Somerville, NJ 08876
	52923	**REA**		Readouts, Inc., P.O. Box 149, Del Mar, CA 92014
	28564	**REC**		Refac Electronics Corp., P.O. Box 809, Winsted, CT 06098
	56025	**RET**		EG&G Reticon Corp., 45 Williams St., Wellesley, MA 02181
		RKW		Rockwell Int'l Elec. Devices Div., 4311 Jamboree Rd., Newport Beach, CA 92660
	F1721	**RTCF**	*	RTC-Compelec, 130 Avenue Ledru-Rollin, 75540 Paris Cedex 11, France
CRP	94144	**RTN**		Raytheon Company, 350 Ellis St., Mountain View, CA 94043
		SAI		Sanders Associates, Inc., 95 Canal St., Nashua, NH 03061
	S3385	**SAKJ**		Sanken Electric Co. Ltd., 1-22-8 Nishi Ikebukuro, Tokyo, Japan
	51522	**SAM**		Skan-A-Matic Corp., P.O. Box S, Route 5 West, Elbridge, NY 13060

EXPLICATION 2

Si vous connaissez:
La reference du produit
Et avez besoin de connaître:
Les caractéristiques électriques
Premièrement:
Allez à la page du TYPE NUMBER CROSS INDEX et trouvez votre référence du produit.

a. Notez les numéros de page et de ligne en plus du genre. EXEMPLE: **187-9**

1. TYPE No. CROSS INDEX

IN TYPE NUMBER SEQUENCE

TYPE No.	MFRS	Pg&Line	TYPE No.	MFRS	Pg&Line	TYPE No.	MFRS	Pg&Line	TYPE No.	MFRS	Pg&Line	TYPE No.	MFRS	Pg&Line
D352PK(A)	♦ALGG	150 - 98	DIP651L	♦REC	186 - 99	DM3000	♦REC	154 - 95	ED109RKW	♦SPR	35 - 76	ED740H	SPR	43 - 6
D353PA(A)	♦ALGG	150 - 99	DIP651R	♦REC	186 -100	DM3001	REC	154 - 96	ED110R	SPR	37 -100	ED740O	SPR	52 - 68
D353PK(A)	♦ALGG	150 -100	DIP652	♦REC	186 -101	DM6003	♦REC	155 - 24	ED110RK	SPR	37 -101	ED740P	SPR	64 - 12
D380PA	♦ALGG	143 - 75	DIP850	♦REC	187 - 8	DM6004	REC	155 - 25	ED113G	SPR	66 - 67	ED740R	SPR	39 -103
D380PK	♦ALGG	143 - [illegible]	DIP850PM	♦REC	186 - 58	DM6009	REC	154 - 86	ED113R	SPR	37 -102	ED740Y	SPR	55 -104
D381PA	ALGG	143 - [illegible]	DIP851L	♦REC	187 - 9	DM6010	REC	154 - 87	ED113Y	SPR	54 - 87	ED743A	SPR	50 - 56
D381PK	♦ALGG	143 - [illegible]	DIP851R	♦REC	187 - 10	DM6015	REC	160 - 66	ED114G	SPR	61 -105	ED743G	SPR	64 - 13
D382PA	♦ALGG	143 - 78	DIP852	♦REC	187 - 11	DM6016	REC	160 - 67	ED114R	SPR	37 - 34	ED743H	SPR	43 - 7
D382PK	♦ALGG	143 - 79	DIP1050	♦REC	187 - 14	DM6021	REC	159 - 5	ED114Y	SPR	54 - 17	ED743O	SPR	50 - 57
D383PA	♦ALGG	143 - 80	DIP1050A	♦REC	187 - 15	DM6022	REC	159 - 6	ED115G	SPR	66 - 68	ED743P	SPR	64 - 14
D383PK	♦ALGG	143 - 81	DIP1050PM-1	♦REC	187 - 16	DM10348-03	♦REC	162 - 5	ED115R	SPR	37 -103	ED743R	SPR	39 -104
D390PA(A)	♦ALGG	143 - 82	DIP1051L	♦REC	187 - 17	DM10348-04	♦REC	155 - 21	ED116R	SPR	37 - 35	ED743Y	SPR	55 -105
D390PK(A)	♦ALGG	143 - 83	DIP1051R	♦REC	187 - 18	DMC16106A	♦OPCJ	182 - 96	ED120R	SPR	37 -104	ED744A	SPR	50 - 58
D391PA(A)	♦ALGG	143 - 84	DIP1052	♦REC	187 - 19	DMC16106B	♦OPCJ	183 -106	ED121G	SPR	61 - 27	ED744G	SPR	64 - 15
D391PK(A)	♦ALGG	143 - 85	DIR170	♦LAD	204 - 16	DMC16106C	♦OPCJ	183 -102	ED121R	SPR	35 - 77	ED744H	SPR	43 - 8
D392PA(A)	♦ALGG	143 - 86	DL48G	♦FREB	162 - 78	DMC16117	♦OPCJ	183 -103	ED122G	SPR	61 - 28	ED744O	SPR	50 - 59
D392PK(A)	♦ALGG	143 - 87	DL48R	♦FREB	162 - 79	DMC16207	♦OPCJ	183 -107	ED122R	SPR	35 - 78	ED744P	SPR	64 - 16
D393PA(A)	♦ALGG	143 - 88	DL51G	♦FREB	162 - 80	DMC20215	♦OPCJ	184 - 1	ED123G	♦SPR	60 - 55	ED744R	SPR	39 -105
D393PK(A)	♦ALGG	143 - 89	DL51R	♦FREB	162 - 81	DMC32216	♦OPCJ	183 - 97	ED123R	♦SPR	37 - 75	ED744Y	SPR	55 -106
D610P(A)	♦ALGG	79 - 87	DL330M	♦SIEX	158 - 29	DMC40209	♦OPCJ	183 - 99	ED123Y	♦SPR	53 - 52	ED746A	SPR	50 - 60
D620P(A)	♦ALGG	80 - 61	DL340M	♦SIEX	160 - 79	DMC40218	♦OPCJ	183 - 96	ED124G	♦SPR	60 - 2	ED746G	SPR	64 - 17
D630P(A)	♦ALGG	80 - 62	DL416	♦SIEX	161 - 47	DMF605	♦OPCJ	163 - 40	ED124R	♦SPR	37 - 12	ED746H	SPR	43 - 9

b. Localisez ces numéros de page et de ligne et vous trouverez les caractéristiques électriques. Le numéro de schéma d'encombrement **PY132a** est situé dans la dernière colonne et tout numeros sont inscrits successivement dans le "Drawing Index." (Voir à la Table des Matières.)

37. DISPLAY: OTHER TECHNOLOGY DISPLAYS

IN ORDER OF:(1)TYPE DISPLAY (2)NO. DIGITS (3)CHAR. HT. & (4) TYPE No.

LINE No.	4 TYPE No.	1 TYPE OF DIS-PLAY	2 NO. OF DIG ITS	3 CHAR. HGHT. (in)	COL -OR	D.C. VOLT (V)	D.C. CURR per seg (A)	POWER DISS. per seg	TEMP RNG. CODE - +	RESP TIME (S)	LUMINANCE Lv (fL)	LUMINANCE V SUPP. (V)	LIFE (hrs)	FEATURES	SCHEM -ATIC	DRAWING Ø-RND. Ø-RECT. Δ-STRIP *-CHIP
1	3015FBM	INC	1	360m	10	5.0	8.0m	40m	58		700	5.0	250k	7 Seg,Num	♦	PY135Ø
2	3015FBN10	INC	1	360m	10	5.0	10m	50m	58		1.7k	5.0	100k	7 Seg,Num	♦	PY135aØ
3	3015FBN15	INC	1	360m	10	5.0	15m	75m	58		4.5k	5.0	100k	7 Seg;Num		
4	3015FBN20	INC	1	360m	10	5.0	20m	100m	58		5.5k	5.0	100k	7 Seg;Num	♦	PY135aØ
5	3015FBN	INC	1	360m	10	5.0	8.0m	40m	58		700	5.0	250k	7 Seg,Num	♦	PY135aØ
6	3015G10	INC	1	360m	10	5.0	10m	50m			1.7k	5.0	100k	Plus,Minus,One,Decimal	♦	PY136Ø
7	3015G	INC	1	360m	10	5.0	8.0m	40m	58		700		250k	Plus,Minus,One Decimal	♦	PY136Ø
8	DIP850	INC	1	453m	10	5.0	17m	85m		24m	7.0k	5.0	100k	Digit	♦	PY132aØ
9	DIP851L	INC	1	453m	10	5.0	17m	85m		24m	7.0k	5.0	100k	Digit w/L.H. Dec.Pt	♦	PY132aØ
10	DIP851R	INC	1	453m	10	5.0	17m	85m		24m	7.0k	5.0	100k	Digit w/R.H. Dec.Pt	♦	PY132aØ
11	DIP852	INC	1	453m	10	5.0	17m	85m		24m	7.0k	5.0	100k	Digit w/Colon	♦	PY132aØ
12	GL-751RS	INC	1	.47	%	5.0	17m		58	24m	15k			Digit R.D.P.	EC4	PY120

c. Localisez le numéro de schéma d'encombrement dans le "Outline Drawing Index" et notez le numéro de la page inscrit. EXEMPLE: **PY132a**

DRAWING INDEX – OPTOELECTRONICS

OUTLINE DRAWINGS

DRAWING NO.	PAGE	DRAWING NO.	PAGE	DRAWING NO.	PAGE	DRAWING NO.	PAGE	DRAWING NO.	PAGE	DRAWING NO.	PAGE	DRAWING NO.	PAGE
PY129	652	PY281	663	PY488	678	PY584	691	PY639	703	PY740	714	PY830a	726
PY129a	652	PY281a	663	PY492	678	PY585	692	PY640	703	PY741	714	PY831	726
PY130	652	PY282	663	PY493	679	PY586	692	PY641	704	PY742	714	PY832	726
PY130a-g	652	PY292a-g	663	PY500	679	PY586a-c	692	PY641a-ap	704	PY743	715	PY840	727
PY132	653	PY302	663	PY501	679	PY569	692	PY642	705	PY744	715	PY851	727
PY132a	653	PY308	664	PY503	680	PY587	692	PY642a-bh	705	PY747	715	PY854	727
PY133	653	PY308a-c	664	PY505	680	PY587a	692	PY643	705	PY748	715	PY855	727
PY134	653	PY309	664	PY505a-d	680	PY588	693	PY643a-q	705	PY749	715	PY856	739
PY135	653	PY311	664	PY507	681	PY588a-d	693	PY644	706	PY749a	715	PY856a	739

d. Allez à la page indiquée et localisez le schéma.

49. OUTLINE DRAWINGS

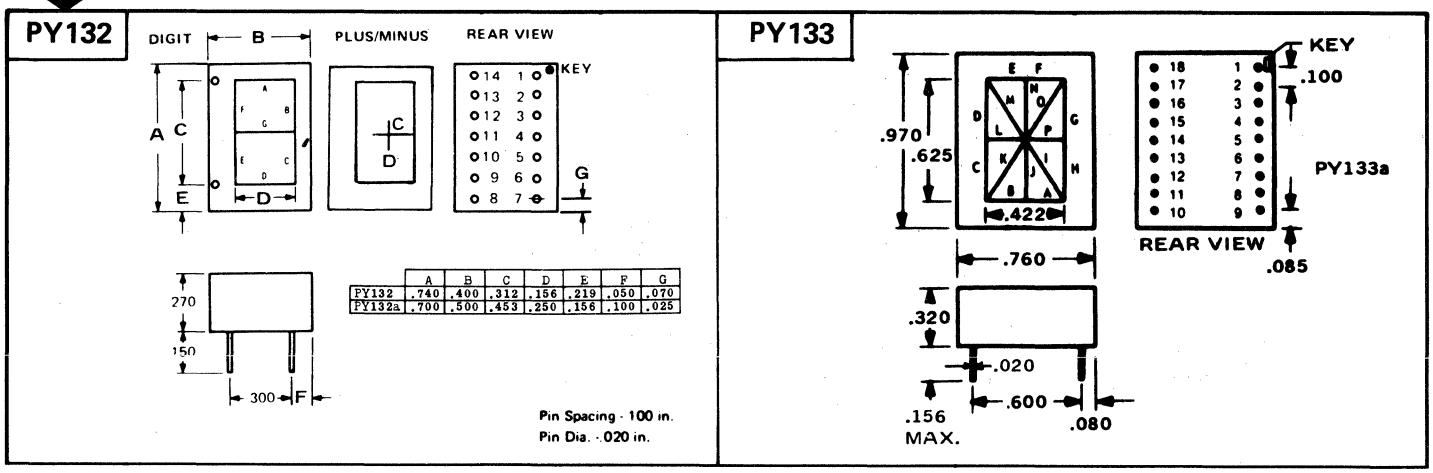

	A	B	C	D	E	F	G
PY132	.740	.400	.312	.156	.219	.050	.070
PY132a	.700	.500	.453	.250	.156	.100	.025

N.B.: Les symboles et les codes utilisés dans ces sections techniques sont expliqués dans les pages "Interpreter" à la fin du livre.

DÈFINITION DES TERMES

INTERPRETATIONS ET DEFINITIONS

Cette section définit les têtes de colonnes et les symboles qui apparaissent dans les sections techniques du livre. Classées alphabétiquement selon la description du domaine d'applications, les "Column Definitions" interprètent les titres des domaines d'applications et indiquent l'usage de la section.

SECTION 37 OTHER TECHNOLOGY DISPLAYS SECTION 37

37. OTHER TECHNOLOGY DISPLAYS

IN ORDER OF: (1) TYPE (2) CHAR. HEIGHT (3) No. CHAR. & (4) TYPE NUMBER

LINE No.	4 TYPE NUMBER	1 TYPE OF DISPLAY	3 NO. OF CHRITS	2 CHAR. HGHT. (in)	COL -OR	D.C. VOLT (V)	D.C. CURR per seg (A)	PD per seg	TEMP RNG. CODE - +	RESP TIME (s)	LUMINANCE Lv (fL)	LUMINANCE V SUPP. (V)	LIFE (hrs)	FEATURES	SCHE-MATIC	DRAWING Ø-RND. ⊘-RECT. Δ-STRIP *-CHIP
✪		③	④	⑤	⑥	⑦	⑧	⑨	✪	⑪	⑫		⑭	⑮	✪	

③
ELL - Electroluminescent
GAS - Gas Discharge
INC - Incandescent
LTR - Light reflecting
VFD - Vacuum Fluorescent

† - Typical
* - See Dwg. for exact number of digits
♦- No. of characters per line/register. (see features)

⑦
* - AC
△ - Peak AC
§ - Peak pulse
# - Per Segment

- Total current
§ - Peak pulse

- Total power dissipation
⊘ - Max package dissipation

⑫
⊘ - Maximum
Ø- Minimum
* - Luminance (nt)
△ - Candelas (Luminous Int)
§ - Illuminance (fc)
$ - Total Radiated flux (lm)

$ - Number of operations

Alph - Alphanumeric
Hex - Hexadecimal

✪ SYMBOLS & CODES AT TOP OF FIRST INTERPRETER PAGE

INTERPRETATIONS (Voir aussi: Symboles et Codes)

SYMBOLES: Les symboles tels que #, ▲, et $ sont utilisés dans toutes les colonnes, que ce soit de valeurs numériques ou autres, chaque fois que les entrées de données diffèrent d'une certaine façon de l'entité définie dans la tête de colonne. Par exemple, si une tête de colonne particulière spécifie "MAX Power (in Watts)" et que la valeur numérique inscrite pour un produit particulier correspond au lieu de cela à la puissance minimale, la variation est signalée par l'apparition d'un symbole spécial à côté de la valeur numérique.

CODES: Des codes sont utilisés dans certaines colonnes de façon à abréger les données qui sont entrées. Les codes peuvent être alphabétiques (A, B, C etc. . .) ou numériques (1, 2, 3 etc. . .) ou bien une combinaison des deux.

MULTIPLICATEURS POUR LES PUISSANCES DE DIX

Les multiplicateurs pour les puissances de dix indiqués ci-après sont utilisés dans les colonnes numériques quand la valeur à inscrire est beaucoup plus grande ou beaucoup plus petite que celle qui peut être inscrite selon l'unité de mesure indiquée dans la tête de colonne. Normalement cette dernière est ce que l'on appelle l'unité de base: telle que V (volts), A (ampères), s (secondes). La liste des multiplicateurs ainsi que l'explication de leur emploi sont données ci-après:

EXPLICATION

Valeurs des données à inscrire	Unité de base dans la tête de colonne.	Entrée inscrite
3 milliamperes	A (amperes)	3.0m
9 megaohms	Ω (ohms)	9.0M
0.5 volt	V (volts)	500m*
10 amperes	A (amperes)	10

*peut aussi être écrit ainsi: 0.5 sans multiplicateur

MULTIPLICATEURS

Puissance	Préfixe	Symbole
10^{12}	tera	T
10^{9}	giga	G
10^{6}	mega	M
10^{3}	kilo	k
10^{-3}	milli	m
10^{-6}	micro	µ
10^{-9}	nano	n
10^{-12}	pico	p
10^{-15}	femto	f
10^{-18}	atto	a

PARAMETRES DE CLASSEMENT SEQUENTIEL

Le classement des produits dans les sections techniques est lié à un groupement de caractéristiques spéciales choisies selon leur importance parmi le groupe général de caractéristiques classifié dans chaque section. Ces caractéristiques choisies ou ces paramètres de classement séquentiel diffèrent d'une section à l'autre, et sont identifiés au début de chaque page comme indiqué dans l'exemple ci-après.

Les différents produits à l'intérieur d'une section sont d'abord classés selon un ordre numérique (ou alphabétique) croissant pour le premier des paramètres. Les groupes de produits ayant une valeur commune pour le premier paramètre sont alors classés selon un ordre croissant pour le deuxième paramètre. Ce procédé continue pour chaque paramètre successif jusqu'à et y compris le dernier paramètre qui dans chaque cas est lui-même la reference du produit. Le classement final, par reference du produit est fait selon le classement séquentiel des reference du produit dans la table des renvois. L'absence d'une entrée pour n'importe quel paramètre de classement séquentiel est considérée comme étant un zéro et précède toutes les entrées actuelles dans le classement séquentiel.

MAJOR CHARACTERISTICS — **SEQUENCING PARAMETERS**

37. DISPLAY: OTHER TECHNOLOGY DISPLAYS

IN ORDER OF:(1)TYPE DISPLAY (2)NO. DIGITS (3)CHAR. HT. & (4) TYPE No.

LINE No.	4 TYPE No.	1 TYPE OF DIS-PLAY	2 NO. OF DIG ITS	3 CHAR. HGHT. (in)	COL -OR	D.C. VOLT (V)	D.C. CURR per seg (A)	POWER DISS. per seg	TEMP RNG. CODE - +	RESP TIME (S)	LUMINANCE Lv (fL)	LUMINANCE V SUPP. (V)	LIFE (hrs)	FEATURES	SCHEM -ATIC	DRAWING Ø-RND. Ø-RECT. Δ-STRIP *-CHIP
1	3015FBM	INC	1	360m	10	5.0	8.0m	40m	58		700	5.0	250k	7 Seg,Num	♦	PY135Ø
2	3015FBN10	INC	1	360m	10	5.0	10m	50m	58		1.7k	5.0	100k	7 Seg,Num	♦	PY135aØ
3	3015FBN15	INC	1	360m	10	5.0	15m	75m	58		4.5k	5.0	100k	7 Seg;Num		
4	3015FBN20	INC	1	360m	10	5.0	20m	100m	58		5.5k	5.0	100k	7 Seg;Num	♦	PY135aØ
5	3015FBN	INC	1	360m	10	5.0	8.0m	40m	58		700	5.0	250k	7 Seg,Num	♦	PY135aØ
6	3015G10	INC	1	360m	10	5.0	10m	50m			1.7k	5.0	100k	Plus,Minus,One,Decimal	♦	PY136Ø

DOS MODOS BASICOS:

	Si conoce:	Y necesita saber:	Lea:
1	Los requerimientos eléctricos y mecánicos	Un número de tipo (Número de parte del fabricante)	Explicación 1
2	Un número de tipo	Las características eléctricas y/o mecánicas o su configuración de trazo o el fabricante o un tipo equivalente	Explicación 2

EXPLICACION 1

Si conoce:
Los requerimientos eléctricos y mecánicos
Y necesita saber:
Un número de tipo adecuado
Primero:
Refiérase a la Sección TABLE OF CONTENTS

a. Seleccione del Contenido la Sección Técnica correspondiente al tipo conocido de la parte. EJEMPLO: Sección Técnica **37.**

TABLE OF CONTENTS **Page**

36. **LCD DISPLAYS**
Seven-segment Numeric 203
Segmented Alphanumeric 218
5x7 Dot Matrix 219
Other Configuration LCD Matrix 221
Bar Graph Display 221
LCD Display Shutter 222

37. **OTHER TECHNOLOGY DISPLAYS**
Electroluminescent Display 223
Gas Discharge Display 223
Incandescent Display 224
Light Reflecting Display 225
Vacuum Fluorescent Display 225

b. Refiérase a esa Sección. Localice el número de tipo que concuerde en general con sus requerimientos. EJEMPLO: **DIP851L.**

Debido al orden en secuencia, los tipos similares aparecerán juntos.

Nótense los parámetros secuenciales en la esquina superior derecha de cada página.

37. DISPLAY: OTHER TECHNOLOGY DISPLAYS

IN ORDER OF:(1)TYPE DISPLAY (2)NO. DIGITS (3)CHAR. HT. & (4) TYPE No.

LINE No.	4 TYPE No.	1 TYPE OF DIS-PLAY	2 NO. OF DIG ITS	3 CHAR. HGHT. (in)	COL -OR	D.C. VOLT (V)	D.C. CURR per seg (A)	POWER DISS. per seg	TEMP RNG. CODE - +	RESP TIME (S)	LUMINANCE Lv (fL)	LUMINANCE V SUPP. (V)	LIFE (hrs)	FEATURES	SCHEM -ATIC	DRAWING Ø-RND. Ø-RECT. Δ-STRIP *-CHIP
1	3015FBM	INC	1	360m	10	5.0	8.0m	40m	58		700	5.0	250k	7 Seg,Num	♦	PY135Ø
2	3015FBN10	INC	1	360m	10	5.0	10m	50m	58		1.7k	5.0	100k	7 Seg,Num	♦	PY135aØ
3	3015FBN15	INC	1	360m	10	5.0	15m	75m	58		4.5k	5.0	100k	7 Seg;Num		
4	3015FBN20	INC	1	360m	10	5.0	20m	100m	58		5.5k	5.0	100k	7 Seg;Num	♦	PY135aØ
5	3015FBN	INC	1	360m	10	5.0	8.0m	40m	58		700	5.0	250k	7 Seg,Num	♦	PY135aØ
6	3015G10	INC	1	360m	10	5.0	10m	50m			1.7k	5.0	100k	Plus,Minus,One,Decimal	♦	PY136Ø
7	3015G	INC	1	360m	10	5.0	8.0m	40m	58		700		250k	Plus,Minus,One Decimal	♦	PY136Ø
8	DIP850	INC	1	453m	10	5.0	17m	85m		24m	7.0k	5.0	100k	Digit	♦	PY132aØ
9	DIP851L	INC	1	453m	10	5.0	17m	85m		24m	7.0k	5.0	100k	Digit w/L.H. Dec.Pt	♦	PY132aØ
10	DIP851R	INC	1	453m	10	5.0	17m	85m		24m	7.0k	5.0	100k	Digit w/R.H. Dec.Pt	♦	PY132aØ
11	DIP852	INC	1	453m	10	5.0	17m	85m		24m	7.0k	5.0	100k	Digit w/Colon	♦	PY132aØ
12	GL-751RS	INC	1	.47	%	5.0	17m		58	24m	15k			Digit R.D.P.	EC4	PY120
13	GL-951RS	INC	1	.61	%	5.0	17m		58	24m	15k			Digit R.D.P.	EC6	PY121
14	DIP1050	INC	1	625m	10	5.0	17m	85m		28m	6.0k	5.0	100k	7-Seg Digital	♦	PY60p
15	DIP1050A	INC	1	625m	10	5.0	17m	85m		28m	6.0k	5.0	100k	16-Seg Alphanumeric	♦	PY133aØ
16	DIP1050PM-1	INC	1	625m	10	5.0	17m	85m		28m	6.0k	5.0	100k	Plus/Minus 1	♦	PY60p
17	DIP1051L	INC	1	625m	10	5.0	17m	85m		28m	6.0k	5.0	100k	7-Seg Dig Lf Hand Dec Pt	♦	PY60p
18	DIP1051R	INC	1	625m	10	5.0	17m	85m		28m	6.0k	5.0	100k	7-Seg Dig Rt Hand Dec Pt	♦	PY60p

Segundo:

Refiérase a la Sección TYPE NUMBER CROSS INDEX

a. Encuentre su número de tipo seleccionado **DIP851L**

b. Note el (los) código(s) a la derecha del número de parte. EJEMPLO: **REC**

c. Note el número de página y línea. EJEMPLO: **187-9**

1. TYPE No. CROSS INDEX

IN TYPE NUMBER SEQUENCE

TYPE No.	MFRS	Pg&Line	TYPE No.	MFRS	Pg&Line	TYPE No.	MFRS	Pg&Line	TYPE No.	MFRS	Pg&Line	TYPE No.	MFRS	Pg&Line
D352PK(A)	♦ALGG	150 - 98	DIP651L	♦REC	186 - 99	DM3000	♦REC	154 - 95	ED109RKW	♦SPR	35 - 76	ED740H	SPR	43 - 6
D353PA(A)	♦ALGG	150 - 99	DIP651R	♦REC	186 -100	DM3001	REC	154 - 96	ED110R	SPR	37 -100	ED740O	SPR	52 - 68
D353PK(A)	♦ALGG	150 -100	DIP652	♦REC	186 -101	DM6003	♦REC	155 - 24	ED110RK	SPR	37 -101	ED740P	SPR	64 - 12
D380PA	♦ALGG	143 - 75	DIP850	♦REC	187 - 8	DM6004	REC	155 - 25	ED113G	SPR	66 - 67	ED740R	SPR	39 -103
D380PK	♦ALGG	143	DIP850PM	♦REC	186 - 58	DM6009	REC	154 - 86	ED113R	SPR	37 -102	ED740Y	SPR	55 -104
D381PA	ALGG	143	DIP851L	♦REC	187 - 9	DM6010	REC	154 - 87	ED113Y	SPR	54 - 87	ED743A	SPR	50 - 56
D381PK	♦ALGG	143	DIP851R	♦REC	187 - 10	DM6015	REC	160 - 66	ED114G	SPR	61 -105	ED743G	SPR	64 - 13
D382PA	♦ALGG	143 - 78	DIP852	♦REC	187 - 11	DM6016	REC	160 - 67	ED114R	SPR	37 - 34	ED743H	SPR	43 - 7
D382PK	♦ALGG	143 - 79	DIP1050	♦REC	187 - 14	DM6021	REC	159 - 5	ED114Y	SPR	54 - 17	ED743O	SPR	50 - 57
D383PA	♦ALGG	143 - 80	DIP1050A	♦REC	187 - 15	DM6022	REC	159 - 6	ED115G	SPR	66 - 68	ED743P	SPR	64 - 14
D383PK	♦ALGG	143 - 81	DIP1050PM-1	♦REC	187 - 16	DM10348-03	♦REC	162 - 5	ED115R	SPR	37 -103	ED743R	SPR	39 -104
D390PA(A)	♦ALGG	143 - 82	DIP1051L	♦REC	187 - 17	DM10348-04	♦REC	155 - 21	ED116R	SPR	37 - 35	ED743Y	SPR	55 -105
D390PK(A)	♦ALGG	143 - 83	DIP1051R	♦REC	187 - 18	DMC16106A	♦OPCJ	182 - 96	ED120R	SPR	37 -104	ED744A	SPR	50 - 58
D391PA(A)	♦ALGG	143 - 84	DIP1052	♦REC	187 - 19	DMC16106B	♦OPCJ	183 -106	ED121G	SPR	61 - 27	ED744G	SPR	64 - 15
D391PK(A)	♦ALGG	143 - 85	DIR170	♦LAD	204 - 16	DMC16106C	♦OPCJ	183 -102	ED121R	SPR	35 - 77	ED744H	SPR	43 - 8

d. Refiérase a la Sección MANUFACTURERS' CODES & NAMES.

e. Localice el código y nombre del fabricante. EJEMPLO: **REC**

MANUFACTURERS' CODES & NAMES

	K8747	**PLOB**		Plessey Optoelectronics & Microwave, Wood Burcote Way, Towcester, Northamptonshire, U.K.
		QTC		Quantrad Corporation, 19900 So. Normandie Ave., Torrance, CA 90502
CRC	18714	**RCA**		RCA, Solid State Division, Route 202, Somerville, NJ 08876
	52923	**REA**		Readouts, Inc., P.O. Box 149, Del Mar, CA 92014
	28564	**REC**		Refac Electronics Corp., P.O. Box 809, Winsted, CT 06098
	56025	**RET**		EG&G Reticon Corp., 45 Williams St., Wellesley, MA 02181
		RKW		Rockwell Int'l Elec. Devices Div., 4311 Jamboree Rd., Newport Beach, CA 92660
	F1721	**RTCF**	*	RTC-Compelec, 130 Avenue Ledru-Rollin, 75540 Paris Cedex 11, France
CRP	94144	**RTN**		Raytheon Company, 350 Ellis St., Mountain View, CA 94043
		SAI		Sanders Associates, Inc., 95 Canal St., Nashua, NH 03061
	S3385	**SAKJ**		Sanken Electric Co. Ltd., 1-22-8 Nishi Ikebukuro, Tokyo, Japan
	51522	**SAM**		Skan-A-Matic Corp., P.O. Box S, Route 5 West, Elbridge, NY 13060

EXPLICACION 2

Si conoce:
El número de tipo
Y necesita saber:
Las características eléctricas
Primero:
Refiérase a la sección TYPE NUMBER CROSS INDEX y encuentre su número de tipo.

a. Note el número de página y línea al lado de su tipo. EJEMPLO: **187-9**

1. TYPE No. CROSS INDEX

IN TYPE NUMBER SEQUENCE

TYPE No.	MFRS	Pg&Line	TYPE No.	MFRS	Pg&Line	TYPE No.	MFRS	Pg&Line	TYPE No.	MFRS	Pg&Line	TYPE No.	MFRS	Pg&Line
D352PK(A)	♦ALGG	150 - 98	DIP651L	♦REC	186 - 99	DM3000	♦REC	154 - 95	ED109RKW	♦SPR	35 - 76	ED740H	SPR	43 - 6
D353PA(A)	♦ALGG	150 - 99	DIP651R	♦REC	186 -100	DM3001	REC	154 - 96	ED110R	SPR	37 -100	ED740O	SPR	52 - 68
D353PK(A)	♦ALGG	150 -100	DIP652	♦REC	186 -101	DM6003	♦REC	155 - 24	ED110RK	SPR	37 -101	ED740P	SPR	64 - 12
D380PA	♦ALGG	143 - 5	DIP850	♦REC	187 - 8	DM6004	REC	155 - 25	ED113G	SPR	66 - 67	ED740R	SPR	39 -103
D380PK	♦ALGG	143	DIP850PM	♦REC	186 - 58	DM6009	REC	154 - 86	ED113R	SPR	37 -102	ED740Y	SPR	55 -104
D381PA	ALGG	143	DIP851L	♦REC	187 - 9	DM6010	REC	154 - 87	ED113Y	SPR	54 - 87	ED743A	SPR	50 - 56
D381PK	♦ALGG	143	DIP851R	♦REC	187 - 10	DM6015	REC	160 - 66	ED114G	SPR	61 -105	ED743G	SPR	64 - 13
D382PA	♦ALGG	143 - 78	DIP852	♦REC	187 - 11	DM6016	REC	160 - 67	ED114R	SPR	37 - 34	ED743H	SPR	43 - 7
D382PK	♦ALGG	143 - 79	DIP1050	♦REC	187 - 14	DM6021	REC	159 - 5	ED114Y	SPR	54 - 17	ED743O	SPR	50 - 57
D383PA	♦ALGG	143 - 80	DIP1050A	♦REC	187 - 15	DM6022	REC	159 - 6	ED115G	SPR	66 - 68	ED743P	SPR	64 - 14
D383PK	♦ALGG	143 - 81	DIP1050PM-1	♦REC	187 - 16	DM10348-03	♦REC	162 - 5	ED115R	SPR	37 -103	ED743R	SPR	39 -104
D390PA(A)	♦ALGG	143 - 82	DIP1051L	♦REC	187 - 17	DM10348-04	♦REC	155 - 21	ED116R	SPR	37 - 35	ED743Y	SPR	55 -105
D390PK(A)	♦ALGG	143 - 83	DIP1051R	♦REC	187 - 18	DMC16106A	♦OPCJ	182 - 96	ED120R	SPR	37 -104	ED744A	SPR	50 - 58
D391PA(A)	♦ALGG	143 - 84	DIP1052	♦REC	187 - 19	DMC16106B	♦OPCJ	183 -106	ED121G	SPR	61 - 27	ED744G	SPR	64 - 15
D391PK(A)	♦ALGG	143 - 85	DIR170	♦LAD	204 - 16	DMC16106C	♦OPCJ	183 -102	ED121R	SPR	35 - 77	ED744H	SPR	43 - 8
D392PA(A)	♦ALGG	143 - 86	DL48G	♦FREB	162 - 78	DMC16117	♦OPCJ	183 -103	ED122G	SPR	61 - 28	ED744O	SPR	50 - 59
D392PK(A)	♦ALGG	143 - 87	DL48R	♦FREB	162 - 79	DMC16207	♦OPCJ	183 -107	ED122R	SPR	35 - 78	ED744P	SPR	64 - 16
D393PA(A)	♦ALGG	143 - 88	DL51G	♦FREB	162 - 80	DMC20215	♦OPCJ	184 - 1	ED123G	♦SPR	60 - 55	ED744R	SPR	39 -105
D393PK(A)	♦ALGG	143 - 89	DL51R	♦FREB	162 - 81	DMC32216	♦OPCJ	183 - 97	ED123R	♦SPR	37 - 75	ED744Y	SPR	55 -106
D610P(A)	♦ALGG	79 - 87	DL330M	♦SIEX	158 - 29	DMC40209	♦OPCJ	183 - 99	ED123Y	♦SPR	53 - 52	ED746A	SPR	50 - 60
D620P(A)	♦ALGG	80 - 61	DL340M	♦SIEX	160 - 79	DMC40218	♦OPCJ	183 - 96	ED124G	♦SPR	60 - 2	ED746G	SPR	64 - 17
D630P(A)	♦ALGG	80 - 62	DL416	♦SIEX	161 - 47	DMF605	♦OPCJ	163 - 40	ED124R	♦SPR	37 - 12	ED746H	SPR	43 - 9

b. Localice ese número de página y línea y encontrará las características eléctricas. El número del dibujo esquematico **PY132a** está en la última columna y todos dibujos se enumeran en secuencia en el "Drawing Index." (Véase el Contenido.)

37. DISPLAY: OTHER TECHNOLOGY DISPLAYS

IN ORDER OF:(1)TYPE DISPLAY (2)NO. DIGITS (3)CHAR. HT. & (4) TYPE No.

LINE No.	4 TYPE No.	1 TYPE OF DIS-PLAY	2 NO. OF DIG ITS	3 CHAR. HGHT. (in)	COL -OR	D.C. VOLT (V)	D.C. CURR per seg (A)	POWER DISS. per seg	TEMP RNG. CODE - +	RESP TIME (S)	LUMINANCE Lv (fL)	LUMINANCE V SUPP. (V)	LIFE (hrs)	FEATURES	SCHEM -ATIC	DRAWING Ø-RND. Ø-RECT. Δ-STRIP *-CHIP
1	3015FBM	INC	1	360m	10	5.0	8.0m	40m	58		700	5.0	250k	7 Seg,Num	♦	PY135Ø
2	3015FBN10	INC	1	360m	10	5.0	10m	50m	58		1.7k	5.0	100k	7 Seg,Num	♦	PY135aØ
3	3015FBN15	INC	1	360m	10	5.0	15m	75m	58		4.5k	5.0	100k	7 Seg;Num		
4	3015FBN20	INC	1	360m	10	5.0	20m	100m	58		5.5k	5.0	100k	7 Seg;Num	♦	PY135aØ
5	3015FBN	INC	1	360m	10	5.0	8.0m	40m	58		700	5.0	250k	7 Seg,Num	♦	PY135aØ
6	3015G10	INC	1	360m	10	5.0	10m	50m			1.7k	5.0	100k	Plus,Minus,One,Decimal	♦	PY136Ø
7	3015G	INC	1	360m	10	5.0	8.0m	40m	58		700		250k	Plus,Minus,One Decimal	♦	PY136Ø
8	DIP850	INC	1	453m	10	5.0	17m	85m		24m	7.0k	5.0	100k	Digit	♦	PY132aØ
9	DIP851L	INC	1	453m	10	5.0	17m	85m		24m	7.0k	5.0	100k	Digit w/L.H. Dec.Pt	♦	PY132aØ

c. Localice el número del dibujo esquemático en el "Outline Drawing Index" y note el número de página indicado. EJEMPLO: **PY132a**

DRAWING INDEX – OPTOELECTRONICS

OUTLINE DRAWINGS

DRAWING NO.	PAGE	DRAWING NO.	PAGE	DRAWING NO.	PAGE	DRAWING NO.	PAGE	DRAWING NO.	PAGE	DRAWING NO.	PAGE	DRAWING NO.	PAGE
PY129	652	PY281	663	PY488	678	PY584	691	PY639	703	PY740	714	PY830a	726
PY129a	652	PY281a	663	PY492	678	PY585	692	PY640	703	PY741	714	PY831	726
PY130	652	PY282	663	PY493	679	PY586	692	PY641	704	PY742	714	PY832	726
PY130a-g	652	PY292a-g	663	PY500	679	PY586a-c	692	PY641a-ap	704	PY743	715	PY840	727
PY132	653	PY302	663	PY501	679	PY569	692	PY642	705	PY744	715	PY851	727
PY132a	653	PY308	664	PY503	680	PY587	692	PY642a-bh	705	PY747	715	PY854	727
PY133	653	PY308a-c	664	PY505	680	PY587a	692	PY643	705	PY748	715	PY855	727
PY134	653	PY309	664	PY505a-d	680	PY588	693	PY643a-q	705	PY749	715	PY856	739
PY135	653	PY311	664	PY507	681	PY588a-d	693	PY644	706	PY749a	715	PY856a	739

d. Refiérase a la página indicada y localice el dibujo.

49. OUTLINE DRAWINGS

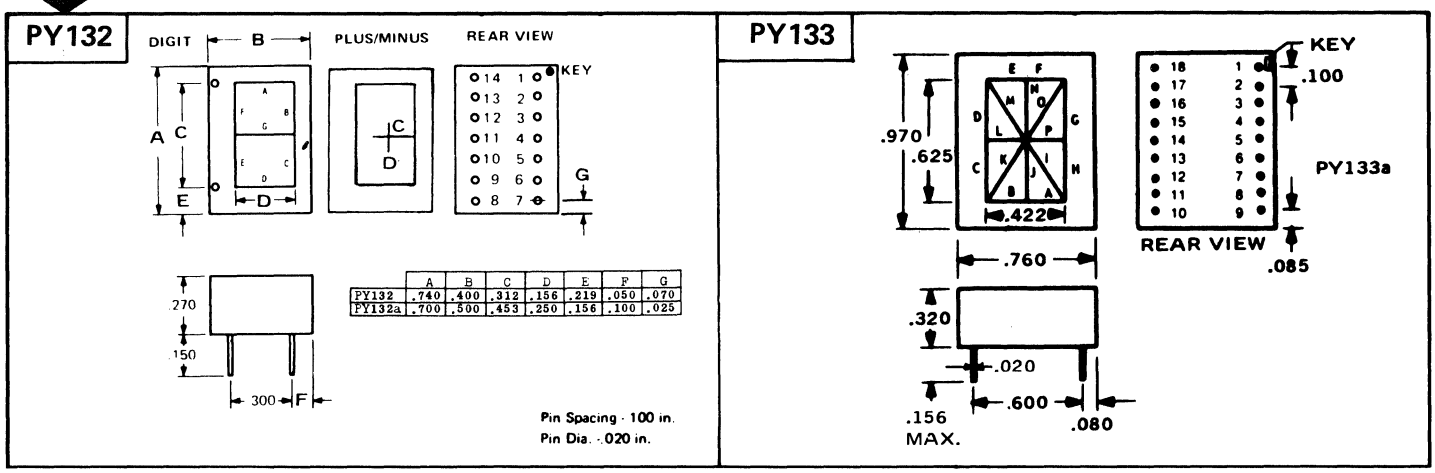

	A	B	C	D	E	F	G
PY132	.740	.400	.312	.156	.219	.050	.070
PY132a	.700	.500	.453	.250	.156	.100	.025

NOTA – Los símbolos y códigos utilizados en estas secciones técnicas se explican en las páginas "Interpreter" al final del libro.

DEFINICION DE TERMINOS

INTERPRETACION Y DEFINICIONES

Esta sección define los encabezamientos de las columnas y los símbolos que aparecen en las Secciones Técnicas de este libro. Clasificada alfabéticamente por su descripción de campo, la sección "Column Definitions" interpreta los títulos de campo e indica cómo se debe usar esa sección.

SECTION 37 OTHER TECHNOLOGY DISPLAYS SECTION 37

37. OTHER TECHNOLOGY DISPLAYS

IN ORDER OF: (1) TYPE (2) CHAR. HEIGHT (3) No. CHAR. & (4) TYPE NUMBER

LINE No.	4 TYPE NUMBER	1 TYPE OF DISPLAY	3 NO. OF CHRITS	2 CHAR. HGHT. (in)	COL -OR	D.C. VOLT (V)	D.C. CURR per seg (A)	PD per seg	TEMP RNG. CODE - +	RESP TIME (s)	LUMINANCE Lv (fL)	LUMINANCE V SUPP. (V)	LIFE (hrs)	FEATURES	SCHE-MATIC	DRAWING Ø-RND. ⊠-RECT. Δ-STRIP *-CHIP
✪		(3)	(4)	(5)	(6)	(7)	(8)	(9)	✪	(11)	(12)		(14)	(15)	✪	

(3)
ELL - Electroluminescent
GAS - Gas Discharge
INC - Incandescent
LTR - Light reflecting
VFD - Vacuum Fluorescent

† - Typical
* - See Dwg. for exact number of digits
♦ - No. of characters per line/register. (see features)

(7)
* - AC
△ - Peak AC
§ - Peak pulse
# - Per Segment

- Total current
§ - Peak pulse

- Total power dissipation
⊠ - Max package dissipation

(12)
⊠ - Maximum
Ø - Minimum
* - Luminance (nt)
△ - Candelas (Luminous Int)
§ - Illuminance (fc)
$ - Total Radiated flux (lm)

$ - Number of operations

Alph - Alphanumeric
Hex - Hexadecimal

✪ SYMBOLS & CODES AT TOP OF FIRST INTERPRETER PAGE

INTERPRETADOR (Véanse también Símbolos y Códigos)

SIMBOLOS: Símbolos tales como #, ▲, y $ se usan en todas las columnas, ya sean numéricas o de otro tipo, cuando las entradas de información difieren de algún modo de la entidad definida en el encabezamiento de la columna. Por ejemplo, si un encabezamiento dado especifica Max. Power (in Watts) y el valor numérico que se ha entrado para un tipo dado representa en cambio la potencia mínima, la variación se denota por medio de un símbolo especial al lado de la entrada numérica.

CODIGOS: Los códigos se usan en algunas columnas como medio para abreviar la información entrada. Los códigos pueden ser alfabéticos (A,B,C etc.) o numéricos (1,2,3 etc.) o una combinación de ambos.

MULTIPLICADORES DE POTENCIA DE DIEZ

Los multiplicadores de potencia de diez mostrados abajo se usan en las columnas numéricas cuando el valor que se entra es muchas veces más grande o pequeño que las unidades de medida indicadas en el encabezamiento de la columna. Usualmente, éstas últimas son las llamadas unidades básicas tales como V (voltios), A (amperios) y s (segundos). A continuación se dan los multiplicadores y una explicación de su uso:

EXPLICACION

Valor de la información a que se dará entrada	Unidad básica en el encabezamiento de la columna	Entrada efectiva
3 milliamperes	A (amperes)	3.0m
9 megaohms	Ω (ohms)	90M
0.5 volt	V (volts)	500m*
10 amperes	A (amperes)	10

*También puede ser escrito como 0.5 sin multiplicador

MULTIPLICADORES

Potencia	Prefijo	Símbolo
10^{12}	tera	T
10^{9}	giga	G
10^{6}	mega	M
10^{3}	kilo	k
10^{-3}	milli	m
10^{-6}	micro	μ
10^{-9}	nano	n
10^{-12}	pico	p
10^{-15}	femto	f
10^{-18}	atto	a

PARAMETROS SECUENCIALES

El ordenamiento de los tipos en las secciones técnicas está asociado a un conjunto de características especiales seleccionadas por su importancia de entre el grupo general de características tabuladas en cada sección. Estas características seleccionadas o parámetros secuenciales difieren de una sección a otra, y se identifican en la parte superior de la página tal como se muestra en el ejemplo de abajo.

Los diferentes tipos dentro de una misma sección presentan inicialmente un orden numérico (o alfabético) ascendente desde el primero de tales parámetros. Los grupos de tipos que tienen un valor común para el primer parámetro son luego ordenados en orden ascendente desde el segundo parámetro. Este proceso continua para cada parámetro de turno, hasta el último parámetro inclusive, el cual es, en cada caso, el número de tipo en sí. El ordenamiento final, por el número de tipo, se hace de acuerdo con la secuencia de los números de tipo en el índice de referencia. La ausencia de una entrada para cualquier parámetro secuencial se considera como cero y precede cualquier entrada efectiva en la secuencia.

MAJOR CHARACTERISTICS — **SEQUENCING PARAMETERS**

37. DISPLAY: OTHER TECHNOLOGY DISPLAYS

IN ORDER OF:(1)TYPE DISPLAY (2)NO. DIGITS (3)CHAR. HT. & (4) TYPE No.

LINE No.	4 TYPE No.	1 TYPE OF DIS-PLAY	2 NO. OF DIG ITS	3 CHAR. HGHT. (in)	COL -OR	D.C. VOLT (V)	D.C. CURR per seg (A)	POWER DISS. per seg	TEMP RNG. CODE - +	RESP TIME (S)	LUMINANCE Lv (fL)	LUMINANCE V SUPP. (V)	LIFE (hrs)	FEATURES	SCHEM -ATIC	DRAWING Ø-RND. Ø-RECT. Δ-STRIP *-CHIP
1	3015FBM	INC	1	360m	10	5.0	8.0m	40m	58		700	5.0	250k	7 Seg,Num	♦	PY135Ø
2	3015FBN10	INC	1	360m	10	5.0	10m	50m	58		1.7k	5.0	100k	7 Seg,Num	♦	PY135aØ
3	3015FBN15	INC	1	360m	10	5.0	15m	75m	58		4.5k	5.0	100k	7 Seg;Num		
4	3015FBN20	INC	1	360m	10	5.0	20m	100m	58		5.5k	5.0	100k	7 Seg;Num	♦	PY135aØ
5	3015FBN	INC	1	360m	10	5.0	8.0m	40m	58		700	5.0	250k	7 Seg,Num	♦	PY135aØ
6	3015G10	INC	1	360m	10	5.0	10m	50m			1.7k	5.0	100k	Plus,Minus,One,Decimal	♦	PY136Ø

二 べ方は二通りあります。

1	電気的及び機械的に要求される事柄	型式番号(製品番号)	説明 1
2	型式番号	電気的 / 機械的特性 または回路図と外観図 または製造元 または同一規格品	説明 2

説明 1

電気的、又は機械的に要求されることがら(米軍仕様を含む)がわかっていて、その目的に合った型式を知りたいときは、まず TABLE OF CONTENTS を開きます。

a. TABLE OF CONTENTS の中から、わかっている素子の型式に一致する項目を選びます。
例：項目 37.

TABLE OF CONTENTS **Page**

36. **LCD DISPLAYS**
Seven-segment Numeric 203
Segmented Alphanumeric 218
5x7 Dot Matrix 219
Other Configuration LCD Matrix 221
Bar Graph Display 221
LCD Display Shutter 222

37. **OTHER TECHNOLOGY DISPLAYS**
Electroluminescent Display 223
Gas Discharge Display 223
Incandescent Display 224
Light Reflecting Display 225
Vacuum Fluorescent Display 225

b．その項目を開けます。要求される条件を満足する型式を見付けます。
例：DIP851L.。
検索に便利なように同様の型式のものは一箇所にまとめてあります。各ページの右上の見出しをご利用ください。

37. DISPLAY: OTHER TECHNOLOGY DISPLAYS

IN ORDER OF:(1)TYPE DISPLAY (2)NO. DIGITS (3)CHAR. HT. & (4) TYPE No.

LINE No.	4 TYPE No.	1 TYPE OF DIS-PLAY	2 NO. OF DIG ITS	3 CHAR. HGHT. (in)	COL -OR	D.C. VOLT (V)	D.C. CURR per seg (A)	POWER DISS. per seg	TEMP RNG. CODE - +	RESP TIME (S)	LUMINANCE Lv (fL)	LUMINANCE V SUPP. (V)	LIFE (hrs)	FEATURES	SCHEM -ATIC	DRAWING Ø-RND. Ø-RECT. Δ-STRIP *-CHIP
1	3015FBM	INC	1	360m	10	5.0	8.0m	40m	58		700	5.0	250k	7 Seg,Num	♦	PY135Ø
2	3015FBN10	INC	1	360m	10	5.0	10m	50m	58		1.7k	5.0	100k	7 Seg,Num	♦	PY135aØ
3	3015FBN15	INC	1	360m	10	5.0	15m	75m	58		4.5k	5.0	100k	7 Seg;Num		
4	3015FBN20	INC	1	360m	10	5.0	20m	100m	58		5.5k	5.0	100k	7 Seg;Num	♦	PY135aØ
5	3015FBN	INC	1	360m	10	5.0	8.0m	40m	58		700	5.0	250k	7 Seg,Num	♦	PY135aØ
6	3015G10	INC	1	360m	10	5.0	10m	50m			1.7k	5.0	100k	Plus,Minus,One,Decimal	♦	PY136Ø
7	3015G	INC	1	360m	10	5.0	8.0m	40m	58		700		250k	Plus,Minus,One Decimal	♦	PY136Ø
8	DIP850	INC	1	453m	10	5.0	17m	85m		24m	7.0k	5.0	100k	Digit	♦	PY132aØ
9	DIP851L	INC	1	453m	10	5.0	17m	85m		24m	7.0k	5.0	100k	Digit w/L.H. Dec.Pt	♦	PY132aØ
10	DIP851R	INC	1	453m	10	5.0	17m	85m		24m	7.0k	5.0	100k	Digit w/R.H. Dec.Pt	♦	PY132aØ
11	DIP852	INC	1	453m	10	5.0	17m	85m		24m	7.0k	5.0	100k	Digit w/Colon	♦	PY132aØ
12	GL-751RS	INC	1	.47	%	5.0	17m		58	24m	15k			Digit R.D.P.	EC4	PY120
13	GL-951RS	INC	1	.61	%	5.0	17m		58	24m	15k			Digit R.D.P.	EC6	PY121
14	DIP1050	INC	1	625m	10	5.0	17m	85m		28m	6.0k	5.0	100k	7-Seg Digital	♦	PY60p
15	DIP1050A	INC	1	625m	10	5.0	17m	85m		28m	6.0k	5.0	100k	16-Seg Alphanumeric	♦	PY133aØ

次に、TYPE NO. CROSS INDEX セクションを開きます。

a．選んだ型式番号 DIP851L を探し出します。
b．素子番号の右の製造元コードを確認します。REC
c．何ページの何行目かを確認します。187-9

1. TYPE No. CROSS INDEX

IN TYPE NUMBER SEQUENCE

TYPE No.	MFRS	Pg&Line	TYPE No.	MFRS	Pg&Line	TYPE No.	MFRS	Pg&Line	TYPE No.	MFRS	Pg&Line	TYPE No.	MFRS	Pg&Line
D352PK(A)	♦ALGG	150 - 98	DIP651L	♦REC	186 - 99	DM3000	♦REC	154 - 95	ED109RKW	♦SPR	35 - 76	ED740H	SPR	43 - 6
D353PA(A)	♦ALGG	150 - 99	DIP651R	♦REC	186 -100	DM3001	REC	154 - 96	ED110R	SPR	37 -100	ED740O	SPR	52 - 68
D353PK(A)	♦ALGG	150 -100	DIP652	♦REC	186 -101	DM6003	♦REC	155 - 24	ED110RK	SPR	37 -101	ED740P	SPR	64 - 12
D380PA	♦ALGG	143 - 5	DIP850	♦REC	187 - 8	DM6004	REC	155 - 25	ED113G	SPR	66 - 67	ED740R	SPR	39 -103
D380PK	♦ALGG	143	DIP850PM	♦REC	186 - 58	DM6009	REC	154 - 86	ED113R	SPR	37 -102	ED740Y	SPR	55 -104
D381PA	ALGG	143	DIP851L	♦REC	187 - 9	DM6010	REC	154 - 87	ED113Y	SPR	54 - 87	ED743A	SPR	50 - 56
D381PK	♦ALGG	143	DIP851R	♦REC	187 - 10	DM6015	REC	160 - 66	ED114G	SPR	61 -105	ED743G	SPR	64 - 13
D382PA	♦ALGG	143 - 78	DIP852	♦REC	187 - 11	DM6016	REC	160 - 67	ED114R	SPR	37 - 34	ED743H	SPR	43 - 7
D382PK	♦ALGG	143 - 79	DIP1050	♦REC	187 - 14	DM6021	REC	159 - 5	ED114Y	SPR	54 - 17	ED743O	SPR	50 - 57
D383PA	♦ALGG	143 - 80	DIP1050A	♦REC	187 - 15	DM6022	REC	159 - 6	ED115G	SPR	66 - 68	ED743P	SPR	64 - 14
D383PK	♦ALGG	143 - 81	DIP1050PM-1	♦REC	187 - 16	DM10348-03	♦REC	162 - 5	ED115R	SPR	37 -103	ED743R	SPR	39 -104
D390PA(A)	♦ALGG	143 - 82	DIP1051L	♦REC	187 - 17	DM10348-04	♦REC	155 - 21	ED116R	SPR	37 - 35	ED743Y	SPR	55 -105
D390PK(A)	♦ALGG	143 - 83	DIP1051R	♦REC	187 - 18	DMC16106A	♦OPCJ	182 - 96	ED120R	SPR	37 -104	ED744A	SPR	50 - 58
D391PA(A)	♦ALGG	143 - 84	DIP1052	♦REC	187 - 19	DMC16106B	♦OPCJ	183 -106	ED121G	SPR	61 - 27	ED744G	SPR	64 - 15
D391PK(A)	♦ALGG	143 - 85	DIR170	♦LAD	204 - 16	DMC16106C	♦OPCJ	183 -102	ED121R	SPR	35 - 77	ED744H	SPR	43 - 8
D392PA(A)	♦ALGG	143 - 86	DL48G	♦FREB	162 - 78	DMC16117	♦OPCJ	183 -103	ED122G	SPR	61 - 28	ED744O	SPR	50 - 59
D392PK(A)	♦ALGG	143 - 87	DL48R	♦FREB	162 - 79	DMC16207	♦OPCJ	183 -107	ED122R	SPR	35 - 78	ED744P	SPR	64 - 16
D393PA(A)	♦ALGG	143 - 88	DL51G	♦FREB	162 - 80	DMC20215	♦OPCJ	184 - 1	ED123G	♦SPR	60 - 55	ED744R	SPR	39 -105
D393PK(A)	♦ALGG	143 - 89	DL51R	♦FREB	162 - 81	DMC32216	♦OPCJ	183 - 97	ED123R	♦SPR	37 - 75	ED744Y	SPR	55 -106
D610P(A)	♦ALGG	79 - 87	DL330M	♦SIEX	158 - 29	DMC40209	♦OPCJ	183 - 99	ED123Y	♦SPR	53 - 52	ED746A	SPR	50 - 60
D620P(A)	♦ALGG	80 - 61	DL340M	♦SIEX	160 - 79	DMC40218	♦OPCJ	183 - 96	ED124G	♦SPR	60 - 2	ED746G	SPR	64 - 17
D630P(A)	♦ALGG	80 - 62	DL416	♦SIEX	161 - 47	DMF605	♦OPCJ	163 - 40	ED124R	♦SPR	37 - 12	ED746H	SPR	43 - 9

d．MANUFACTURERS' CODES & NAMES の項目を開きます。
e．製造元のコードと名前を探し出します。REC

MANUFACTURERS' CODES & NAMES

	K8747	**PLOB**		Plessey Optoelectronics & Microwave, Wood Burcote Way, Towcester, Northamptonshire, U.K.
		QTC		Quantrad Corporation, 19900 So. Normandie Ave., Torrance, CA 90502
CRC	18714	**RCA**		RCA, Solid State Division, Route 202, Somerville, NJ 08876
	52923	**REA**		Readouts, Inc., P.O. Box 149, Del Mar, CA 92014
	28564	**REC**		Refac Electronics Corp., P.O. Box 809, Winsted, CT 06098
	56025	**RET**		EG&G Reticon Corp., 45 Williams St., Wellesley, MA 02181
		RKW		Rockwell Int'l Elec. Devices Div., 4311 Jamboree Rd., Newport Beach, CA 92660
	F1721	**RTCF**	*	RTC-Compelec, 130 Avenue Ledru-Rollin, 75540 Paris Cedex 11, France
CRP	94144	**RTN**		Raytheon Company, 350 Ellis St., Mountain View, CA 94043
		SAI		Sanders Associates, Inc., 95 Canal St., Nashua, NH 03061
	S3385	**SAKJ**		Sanken Electric Co. Ltd., 1-22-8 Nishi Ikebukuro, Tokyo, Japan
	51522	**SAM**		Skan-A-Matic Corp., P.O. Box S, Route 5 West, Elbridge, NY 13060

説明 2

型式番号がわかっていて
電気的特性を知りたいときは、まずTYPE NUMBER
CROSS INDEX のところを開き、型式番号を探し出します。

a. 型式番号の横に書いてあるページ番号と行番号(例: 187-9)を確認します。

1. TYPE No. CROSS INDEX

IN TYPE NUMBER SEQUENCE

TYPE No.	MFRS	Pg&Line	TYPE No.	MFRS	Pg&Line	TYPE No.	MFRS	Pg&Line	TYPE No.	MFRS	Pg&Line	TYPE No.	MFRS	Pg&Line
D352PK(A)	♦ALGG	150 - 98	DIP651L	♦REC	186 - 99	DM3000	♦REC	154 - 95	ED109RKW	♦SPR	35 - 76	ED740H	SPR	43 - 6
D353PA(A)	♦ALGG	150 - 99	DIP651R	♦REC	186 -100	DM3001	REC	154 - 96	ED110R	SPR	37 -100	ED740O	SPR	52 - 68
D353PK(A)	♦ALGG	150 -100	DIP652	♦REC	186 -101	DM6003	♦REC	155 - 24	ED110RK	SPR	37 -101	ED740P	SPR	64 - 12
D380PA	♦ALGG	143 - [illegible]	DIP850	♦REC	187 - 8	DM6004	REC	155 - 25	ED113G	SPR	66 - 67	ED740R	SPR	39 -103
D380PK	♦ALGG	143 [illegible]	DIP850PM	♦REC	186 - 58	DM6009	REC	154 - 86	ED113R	SPR	37 -102	ED740Y	SPR	55 -104
D381PA	ALGG	143 [illegible]	DIP851L	♦REC	187 - 9	DM6010	REC	154 - 87	ED113Y	SPR	54 - 87	ED743A	SPR	50 - 56
D381PK	♦ALGG	143 [illegible]	DIP851R	♦REC	187 - 10	DM6015	REC	160 - 66	ED114G	SPR	61 -105	ED743G	SPR	64 - 13
D382PA	♦ALGG	143 - [illegible]	DIP852	♦REC	187 - 11	DM6016	REC	160 - 67	ED114R	SPR	37 - 34	ED743H	SPR	43 - 7
D382PK	♦ALGG	143 - 79	DIP1050	♦REC	187 - 14	DM6021	REC	159 - 5	ED114Y	SPR	54 - 17	ED743O	SPR	50 - 57
D383PA	♦ALGG	143 - 80	DIP1050A	♦REC	187 - 15	DM6022	REC	159 - 6	ED115G	SPR	66 - 68	ED743P	SPR	64 - 14
D383PK	♦ALGG	143 - 81	DIP1050PM-1	♦REC	187 - 16	DM10348-03	♦REC	162 - 5	ED115R	SPR	37 -103	ED743R	SPR	39 -104
D390PA(A)	♦ALGG	143 - 82	DIP1051L	♦REC	187 - 17	DM10348-04	♦REC	155 - 21	ED116R	SPR	37 - 35	ED743Y	SPR	55 -105
D390PK(A)	♦ALGG	143 - 83	DIP1051R	♦REC	187 - 18	DMC16106A	♦OPCJ	182 - 96	ED120R	SPR	37 -104	ED744A	SPR	50 - 58
D391PA(A)	♦ALGG	143 - 84	DIP1052	♦REC	187 - 19	DMC16106B	♦OPCJ	183 -106	ED121G	SPR	61 - 27	ED744G	SPR	64 - 15
D391PK(A)	♦ALGG	143 - 85	DIR170	♦LAD	204 - 16	DMC16106C	♦OPCJ	183 -102	ED121R	SPR	35 - 77	ED744H	SPR	43 - 8
D392PA(A)	♦ALGG	143 - 86	DL48G	♦FREB	162 - 78	DMC16117	♦OPCJ	183 -103	ED122G	SPR	61 - 28	ED744O	SPR	50 - 59
D392PK(A)	♦ALGG	143 - 87	DL48R	♦FREB	162 - 79	DMC16207	♦OPCJ	183 -107	ED122R	SPR	35 - 78	ED744P	SPR	64 - 16
D393PA(A)	♦ALGG	143 - 88	DL51G	♦FREB	162 - 80	DMC20215	♦OPCJ	184 - 1	ED123G	♦SPR	60 - 55	ED744R	SPR	39 -105
D393PK(A)	♦ALGG	143 - 89	DL51R	♦FREB	162 - 81	DMC32216	♦OPCJ	183 - 97	ED123R	♦SPR	37 - 75	ED744Y	SPR	55 -106
D610P(A)	♦ALGG	79 - 87	DL330M	♦SIEX	158 - 29	DMC40209	♦OPCJ	183 - 99	ED123Y	♦SPR	53 - 52	ED746A	SPR	50 - 60
D620P(A)	♦ALGG	80 - 61	DL340M	♦SIEX	160 - 79	DMC40218	♦OPCJ	183 - 96	ED124G	♦SPR	60 - 2	ED746G	SPR	64 - 17
D630P(A)	♦ALGG	80 - 62	DL416	♦SIEX	161 - 47	DMF605	♦OPCJ	163 - 40	ED124R	♦SPR	37 - 12	ED746H	SPR	43 - 9

b. そのページ番号と行番号の箇所を見ると、それに相当する電気的特性が
すぐ見つかります。回路図と外観図の番号 PY132a と DØ は一番最後の欄に
書かれており、また図面は順番にDrawing Index（目次参照）のところ
に示されています。

37. DISPLAY: OTHER TECHNOLOGY DISPLAYS

IN ORDER OF:(1)TYPE DISPLAY (2)NO. DIGITS (3)CHAR. HT. & (4) TYPE No.

LINE No.	4 TYPE No.	1 TYPE OF DIS-PLAY	2 NO. OF DIG ITS	3 CHAR. HGHT. (in)	COL -OR	D.C. VOLT (V)	D.C. CURR per seg (A)	POWER DISS. per seg	TEMP RNG. CODE - +	RESP TIME (S)	LUMINANCE Lv (fL)	LUMINANCE V SUPP. (V)	LIFE (hrs)	FEATURES	SCHEM -ATIC	DRAWING Ø-RND. Ø-RECT. Δ-STRIP *-CHIP
1	3015FBM	INC	1	360m	10	5.0	8.0m	40m	58		700	5.0	250k	7 Seg,Num	♦	PY135Ø
2	3015FBN10	INC	1	360m	10	5.0	10m	50m	58		1.7k	5.0	100k	7 Seg,Num	♦	PY135aØ
3	3015FBN15	INC	1	360m	10	5.0	15m	75m	58		4.5k	5.0	100k	7 Seg;Num		
4	3015FBN20	INC	1	360m	10	5.0	20m	100m	58		5.5k	5.0	100k	7 Seg;Num	♦	PY135aØ
5	3015FBN	INC	1	360m	10	5.0	8.0m	40m	58		700	5.0	250k	7 Seg,Num	♦	PY135aØ
6	3015G10	INC	1	360m	10	5.0	10m	50m			1.7k	5.0	100k	Plus,Minus,One,Decimal	♦	PY136Ø
7	3015G	INC	1	360m	10	5.0	8.0m	40m	58		700		250k	Plus,Minus,One Decimal	♦	PY136Ø
8	DIP850	INC	1	453m	10	5.0	17m	85m		24m	7.0k	5.0	100k	Digit	♦	PY132aØ
9	DIP851L	INC	1	453m	10	5.0	17m	85m		24m	7.0k	5.0	100k	Digit w/L.H. Dec.Pt	♦	PY132aØ

c. Outline Drawing Indexのところで外観図の番号を探し出し、ページ番
号を確認します。例：PY132a

DRAWING INDEX – OPTOELECTRONICS

OUTLINE DRAWINGS

DRAWING NO.	PAGE	DRAWING NO.	PAGE	DRAWING NO.	PAGE	DRAWING NO.	PAGE	DRAWING NO.	PAGE	DRAWING NO.	PAGE	DRAWING NO.	PAGE
PY129	652	PY281	663	PY488	678	PY584	691	PY639	703	PY740	714	PY830a	726
PY129a	652	PY281a	663	PY492	678	PY585	692	PY640	703	PY741	714	PY831	726
PY130	652	PY282	663	PY493	679	PY586	692	PY641	704	PY742	714	PY832	726
PY130a-g	652	PY292a-g	663	PY500	679	PY586a-c	692	PY641a-ap	704	PY743	715	PY840	727
PY132	653	PY302	663	PY501	679	PY569	692	PY642	705	PY744	715	PY851	727
PY132a	653	PY308	664	PY503	680	PY587	692	PY642a-bh	705	PY747	715	PY854	727
PY133	653	PY308a-c	664	PY505	680	PY587a	692	PY643	705	PY748	715	PY855	727
PY134	653	PY309	664	PY505a-d	680	PY588	693	PY643a-q	705	PY749	715	PY856	739
PY135	653	PY311	664	PY507	681	PY588a-d	693	PY644	706	PY749a	715	PY856a	739

d. 示されているページを開き、外観図と寸法を求めます。

49. OUTLINE DRAWINGS

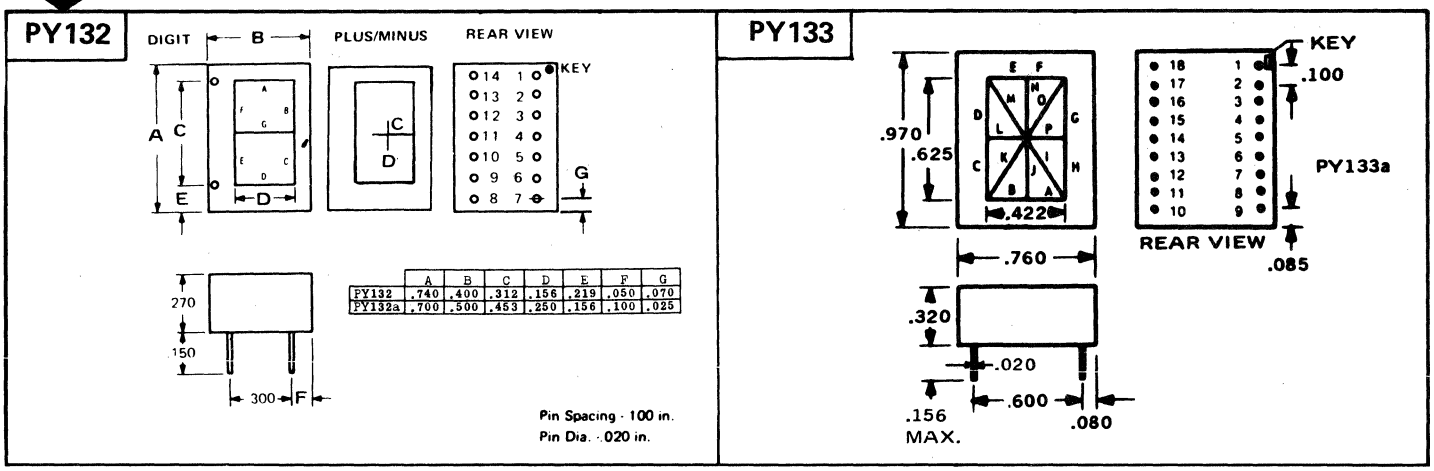

	A	B	C	D	E	F	G
PY132	.740	.400	.312	.156	.219	.050	.070
PY132a	.700	.500	.453	.250	.156	.100	.025

なお、各項目で使われている記号やコードは巻末のInterpreter の部分で解説してあります。

用語の定義

解説と定義

この項目では、この本の各項目で使われている表の欄の見出しや記号(シンボル)の定義が示されています。各分野ごとの記述をアルファベット順に並べ、Column Definitions により各分野の名称を読みとり、当該項目の使い方が示されています。

SECTION 37 OTHER TECHNOLOGY DISPLAYS SECTION 37

37. OTHER TECHNOLOGY DISPLAYS

IN ORDER OF: (1) TYPE (2) CHAR. HEIGHT (3) No. CHAR. & (4) TYPE NUMBER

LINE No.	4 TYPE NUMBER	1 TYPE OF DIS-PLAY	3 NO. OF CHRITS	2 CHAR. HGHT. (in)	COL -OR	D.C. VOLT (V)	D.C. CURR per seg (A)	PD per seg	TEMP RNG. CODE - +	RESP TIME (s)	LUMINANCE Lv (fL)	LUMINANCE V SUPP. (V)	LIFE (hrs)	FEATURES	SCHE-MATIC	DRAWING Ø-RND. Ø-RECT. Δ-STRIP *-CHIP
✪		③	④	⑤	⑥	⑦	⑧	⑨	✪	⑪	⑫		⑭	⑮	✪	

③
ELL - Electroluminescent
GAS - Gas Discharge
INC - Incandescent
LTR - Light reflecting
VFD - Vacuum Fluorescent

† - Typical
* - See Dwg. for exact number of digits
♦- No. of characters per line/register. (see features)

⑦
* - AC
△ - Peak AC
§ - Peak pulse
# - Per Segment

- Total current
§ - Peak pulse

- Total power dissipation
⊠ - Max package dissipation

⑫
⊠ - Maximum
Ø- Minimum
* - Luminance (nt)
△ - Candelas (Luminous Int)
§ - Illuminance (fc)
$ - Total Radiated flux (lm)

$ - Number of operations

Alph - Alphanumeric
Hex - Hexadecimal

✪ SYMBOLS & CODES AT TOP OF FIRST INTERPRETER PAGE

INTERPRETER（記号とコードの項参照）

記号(シンボル)：全ての欄にわたって、見出しで定義されているのとは何らかの形で異なる種類の情報が記載されているときに、数字と#とか△とか$のような記号が使われています。例えば、ある欄の見出しにMax.Power(Watts単位)とあるのに、記入されている特定の型の数値が最小電力のときは、数字の横に付される特別の記号により示されます。

コード：いくつかの欄では記入されるデータを簡素化するためにコードが用いられています。コードはアルファベットの文字(A、B、Cなど)か、数字（1、2、3など)か、その組合わせにより構成されています。

10の累乗数

欄の見出しで指示されている単位をはるかに上回るか、下回るような値が記入されるときは、下記のような10の累乗数を用いて表記してあります。後者に属するものとしては、通常V(ボルト)、A(アンペア)、s(秒)などの、いわゆる基本的単位があげられます。乗数とその使い方は次のとおりです。

説明

記入するデータの値	欄の基本単位	実際の記入例
3 milliamperes	A (amperes)	3.0m
9 megaohms	Ω (ohms)	9.0M
0.5volt	V (volts)	500m*
10amperes	A (amperes)	10

＊ 乗数として0.5という形で記入されていることもあります。

乗数

累乗	接頭辞	記号
10^{12}	tera	T
10^{9}	giga	G
10^{6}	mega	M
10^{3}	kilo	k
10^{-3}	milli	m
10^{-6}	micro	μ
10^{-9}	nano	n
10^{-12}	pico	p
10^{-15}	femto	f
10^{-18}	atto	a

見出しパラメタ

各項目における型式の配列は、その項目で表の中の各々の特性の中から重要と思われる特性の順となっています。これらの重要な特性(見出しパラメタ)は、項目毎に異なりますが、下記の例におけるように、各ページの一番上に明記されています。各項目内の異なる型式は、まず最初のパラメタの数値の増す順、またはアルファベット順に配列されています。最初の見出しパラメタが同一の場合は、二番目のパラメタの数値の増す順に配列されます。各パラメタについて、最後のパラメタまでこの要領で配列順を決めていきます。最後のパラメタは常に型式番号そのものに一致します。型式番号別の配列は、cross-indexの型式番号の順に従ってなされます。
見出しパラメタが記入されていない場合は、ゼロと見なされ、他の数値より前に置かれます。

MAJOR CHARACTERISTICS　　SEQUENCING PARAMETERS

37. DISPLAY: OTHER TECHNOLOGY DISPLAYS

IN ORDER OF:(1)TYPE DISPLAY (2)NO. DIGITS (3)CHAR. HT. & (4) TYPE No.

LINE No.	4 TYPE No.	1 TYPE OF DIS-PLAY	2 NO. OF DIG ITS	3 CHAR. HGHT. (in)	COL -OR	D.C. VOLT (V)	D.C. CURR per seg (A)	POWER DISS. per seg	TEMP RNG. CODE - +	RESP TIME (S)	LUMINANCE Lv (fL)	LUMINANCE V SUPP. (V)	LIFE (hrs)	FEATURES	SCHEM -ATIC	DRAWING Ø-RND. Ø-RECT. Δ-STRIP *-CHIP
1	3015FBM	INC	1	360m	10	5.0	8.0m	40m	58		700	5.0	250k	7 Seg,Num	♦	PY135Ø
2	3015FBN10	INC	1	360m	10	5.0	10m	50m	58		1.7k	5.0	100k	7 Seg,Num	♦	PY135aØ
3	3015FBN15	INC	1	360m	10	5.0	15m	75m	58		4.5k	5.0	100k	7 Seg;Num		
4	3015FBN20	INC	1	360m	10	5.0	20m	100m	58		5.5k	5.0	100k	7 Seg;Num	♦	PY135aØ
5	3015FBN	INC	1	360m	10	5.0	8.0m	40m	58		700	5.0	250k	7 Seg,Num	♦	PY135aØ
6	3015G10	INC	1	360m	10	5.0	10m	50m			1.7k	5.0	100k	Plus,Minus,One,Decimal	♦	PY136Ø

GENERAL TERMS AND DEFINITIONS

BLACKBODY A perfect absorber of all incident radiant energy. It radiates energy solely as function of its temperature.

CANDELA (CD) The luminous intensity, in the perpendicular direction, of a surface of 1/600,000 square meter of a blackbody at the temperature of freezing platinum under a pressure of 101,325 newtons/meter^2.

DETECTOR A special application of light emitter and/or sensor devices where the light source may or may not be modulated in normal operation.

DISPLAY A light emmiter/reflector capable of presenting numeric, alphanumeric and symbolic information.

INFRARED-EMMITING DIODE A diode which emits radiant energy in the infrared region of the electromagnetic spectrum.

ILLUMINATION (ILLUMINANCE) The density of the luminous flux incident on a surface. It is the quotient of the luminous flux by the area of the surface when the latter is uniformly illuminated. Units of measurement are: Footcandle (lumen/ft^2 - lm/ft^2), Lux (lumen/meter^2 - lm/m^2), Phot (lumen per square centimeter - lm/cm^2).

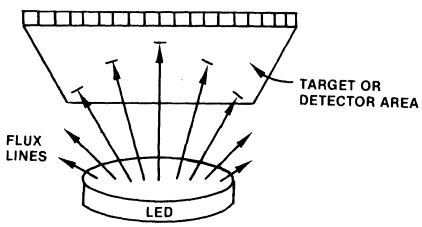

IRRADIANCE Radiant flux density: The incident radiated power per unit area of a surface. The quotient of the radiant flux incident on an element of the surface containing the point, by the area of that element. The radiometric counterpart of illumination. Unit is typically watts/cm^2.

LIGHT-EMITING DIODE (LED) A device which emits energy in the visible region of the electromagnetic spectrum

LUMEN The unit of luminous flux. It is equal to the flux through a unit solid angle (steradian), from a uniform point source of one candela (candle), or to the flux on a unit surface all points of which are at unit distance from a uniform point source of one candela.

LUMINANCE The quotient of the luminous intensity in the given direction of an infinitesimal element of the surface containing the point under consideration, by the orthogonally projected area of the element on a plane perpendicular to the given direction. Typical units are candela/meter^2 and candela/ft^2.

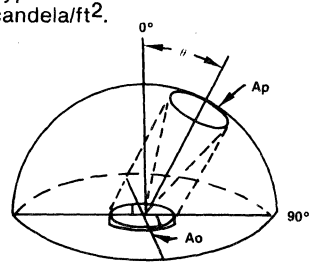

LUMINOUS INTENSITY A spatial flux density concept. The ratio of luminous flux of a source to the solid angle subtended by the detected area and that source.

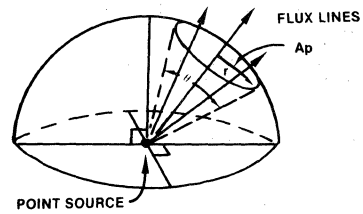

OPTOELECTRONIC DEVICE A device which responds to, emits or modifies electromagnetic radiation in the infrared, visible and/or ultraviolet regions; a device that depends on such radiation for its internal operation.

PHOTO CURRENT The difference between I_L (light current) and I_D (dark current) in a photosensitive device.

PHOTODIODE A diode designed to be responsive to light.

PHOTODIODE, AVALANCHE A diode designed to take advantage of the avalanche multiplication of signal (photo) current.

PHOTOCONDUCTIVE CELL A device designed to change its resistance as a function of light intensity.

PHOTOMETRIC Of or pertaining to radiation in the visible spectrum.

PHOTOVOLTAIC CELL (DIODE) A photosensitive (diode) device which is designed to generate a terminal voltage in response to light.

PHOTOTRANSISTOR A transistor designed to be responsive to light.

PHOTODARLINGTON A darlington-connected transistor designed to be responsive to light.

PHOTOTHYRISTOR A thyristor designed to be responsive to light for controlling its operation.

PHOTOCIRCUIT An integrated circuit which is designed to be responsive to light for controlling its specific function(s).

PHOTOCOUPLER (OPTO-IOSOLATOR) An optoelectronic device that isolates the input from the output by converting electrical energy to light and back again. Included in this volume are photocouplers with photocell, photodiode, phototransistor, photodarlington, photothyristor and photocircuit outputs.

RADIANCE The radiant intensity per unit solid angle per unit of projected area of an extended source.

RADIOMETRIC Of or pertaining to radiation in all wavelengths.

RESPONSIVITY The ratio of the change in photocurrent to the change in incident radiant flux density. The quotient of the rms value of the fundamental component of the electrical output divided by the rms value of the fundamental component of the electrical output divided by the rms value of the fundamental component of the luminous flux, radiant flux, illuminance, or irradiance of a specified spectral distribution.

CONTINUED

GENERAL TERMS AND DEFINITIONS CONTINUED

SOURCE In measuring the efficiency of photosensitive devices a source of illumination or irradiation is necessary. It is usual to use a tungsten filament at a given temperature as a source although a blackbody source at a given temperature is also occasionally specified. These sources serve as a standard for radiation of given spectral frequency and intensity for making measurements of spectral response of photo-sensitive devices.

STERADIAN Solid angle subtending an area on the surface of a sphere equal to the square of the radius, there are 4π steradians in a sphere.

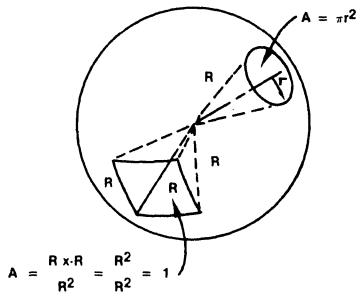

θ_{HI} (BEAM ANGLE) (HALF ANGLE) The full cone angle of an optical axis within which the radiant intensity is not less than 50% of the maximum intensity.

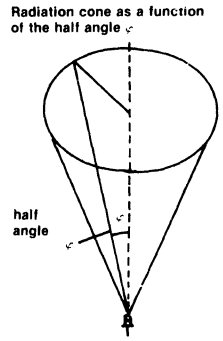

VISIBLE LIGHT Electromagnetic radiation characterized wavelengths in the 0.38 to 0.78μm region.

EXPLANATION OF CHARACTERISTICS AND RATINGS

The characteristics and ratings shown are generally for the worst case conditions. When columns do not specify Min or Max, typical conditions apply, excepted only by symbols following entries. This allows the reader to compare and select devices whose characteristics are stated to be under comparable operating conditions. Unless otherwise noted, characteristics and ratings are measured at a temperature of 25°C.

- **C.R:** contrast ratio - brightness of source minus brightness of background divided by brightness of background. Contrast ratio is a function of applied voltage in transmissive type liquid crystal displays and a function of ambient lighting in reflective type LCDs.
- **E_V:** illuminance; E_e: irradiance - the luminous of radiant flux density incident on a surface; quotient of flux divided by area of illuminated/irradiated surface.
- **h_F:** current transfer ratio (CRT = Ic/IF) - in an LED-transistor photocoupler, it is the output transistor collector current divided by the LED forward current.
- **I_D:** dark current - current flow through a photosensitive device in the dark condition (off-state); representative of device leakage current.
- **I_{FT}:** input trigger current - emitter current necessary to trigger the coupled thyristor.
- **I_L:** light current - current flow through a photosensitive device in the light condition (exposed to light); representative of on-state current.
- **I_V:** luminous intensity; I_e: radiant intensity - the luminous or radiant flux generated per unit solid angle in a given direction.
- **Lv:** luminance; Le: radiance - luminous or radiant intensity in a given direction per unit of projected surface area, as viewed from that direction.
- **θ HI:** beam angle or half-intensity beamwidth - the angle on the optical axis within which the radiant intensity is not less than 50% of the maximum intensity.
- **λ p:** peak wavelength - the wavelength at which the spectral radiant intensity is a maximum.
- **λ_L:** to λ_H: spectral range - lowest and higest wavelength in nanometers capable of being detected by the photosensitive device.
- **$\triangle\lambda$:** spectral bandwidth - the wavelength interval in which the concentration of photometric/radiometric quantity is not less than 50% of its maximum value.
- **M.F.:** matching factor - for arrays, the output current of a minimum channel divided by the output current of a maximum channel.
- **Pcase:** case power dissipation - the power dissipation resulting from the flow of all currents in a device, referenced to case temperature.
- **P_D:** total power dissipation - the power dissipation resulting from the flow of all currents in a device, usually assuming availablilty of an infinite heat sink.
- **P_n,NEP:** noise equivalent power - the noise equivalent power in a one-Hertz bandwidth at the detector output.
- **R_{off}:** dark resistance - resistance of a photoconductive cell in the dark condition (off-state).
- **R_{on}:** light resistance - resistance of a photoconductive cell in the light condition (exposed to light).
- **R_V:** luminous responsitivity; R_e: radiant responsitivity - the rms value of the fundamental components of electrical output (voltage current) divided by the rms value of the fundamental components of the luminous or radiant flux from a specified distribution.
- **S_V:** luminous sensitivity; S_e: radiant sensitivity - the total value of electrical output divided by the total value of incident luminous or radiant flux from a specified distribution.
- **t_R:** typical response time - the general term used to describe rise times, fall times, turn-on, turn-off, decay times and other independent specification of operational times in optoelectronic devices.

PHOTOMETRIC/RADIOMETRIC: TERMS, SYMBOLS, UNITS

PHOTOMETRIC SYSTEM

TERM		MKS			CGS			ENGLISH		
NAME	SYMBOL	NAME	SYMBOL	UNITS	NAME	SYMBOL	UNITS	NAME	SYMBOL	UNITS
Luminous Flux	Φv	Lumen	lm	lm	Lumen	lm	lm	Lumen	lm	lm
Luminous Intensity	Iv	Candela	cd	lm/sr	Candela	cd	lm/sr	Candela	cd	lm/sr
Luminance (Brightness)	Lv	Nit	nt	lm/sr-m^2	Stilb	sb	lm/sr-cm^2	Candela per foot^2	cd/ft^2	lm/sr-ft^2
	Lv	Meter-Lambert (Apostilb)	mL (asb)	π - lm/sr-m^2	Lambert	L	π - lm/sr-cm^2	Foot-Lambert	fL	π - lm/sr-ft^2
Illuminance (Illumination)	Ev	Lux	lx	lm/m^2	Phot	ph	lm/cm^2	Foot-Candle	fc	lm/ft^2

RADIOMETRIC SYSTEM

TERM		MKS		CGS	
NAME	SYMBOL	NAME	UNITS	NAME	UNITS
Radiant Flux	Φe	Watt	W	Watt	W
Radiant Intensity	Ie	Watt per Steradian	W/sr	Watt per Steradian	W/sr
Radiance	Le	Watt per Steradian·meter^2	W/sr-m^2	Watt per Steradian·centimeter^2	W/sr-cm^2
Irradiance	Ee	Watt per meter^2	W/m^2	Watt per centimeter^2	W/cm^2
Radiant Exitence	Me	Watt per meter^2	W/m^2	Watt per centimeter^2	W/cm^2

COMMON OPTOELECTRONIC MATERIALS

MATERIAL	DESCRIPTION
ARGaAs	Aluminum Galium Arsenide
Cd	Cadmium
CdS	Cadmium Sulfide
CdSe	Cadmium Selenide
CdSe:CdS	Cadmium Selenide:Cadmium Sulfide
GaAs	Galium Arsenide
GaAs:Al	Galium Arsenide: Aluminum
GaAsP	Galium Arsenide Phosphide
GaAsP:N	Galium Arsenide Phosphide: Nitride
GaAs:S	Galium Arsenide:Sulfide
GaAs:Zn	Galium Arsenide:Zinc
GaInAsP:InP	Galium Indium Arsenic Phosphide: Indium Phospide
GaP	Galium Phosphide

MATERIAL	DESCRIPTION
GaP:N	Galium Phosphide:Nitride
GaP:ZnO	Galium Phosphide:Zinc Oxide
GaSb	Galium Antimonide
Ge	Germanium
InAs	Indium Arsenide
InGaAsP	Indium Galium Arsenic Phosphide
InSb	Indium Antimonide
$LiTaO_3$	Lithium Tantalate
PbS	Lead Suflide
Se	Selenium
Si	Silicon
SiC	Silicon Carbide
SiC:An,N	Silicon Carbide; Aluminum, Nitride
ZnS	Zinc Sulfide

D.A.T.A.BOOK®
COMPONENT LOCATOR

The Component Locator is designed to assist you in identifying which D.A.T.A.BOOK should be consulted to find information on a specific type of device.

Part 1:
Locator information for the Replacement and Alternate Source Series

At the top of the matrix, locate the type of component for which you need replacement information – then identify which book(s) in the Replacement and Alternate Source Series you should consult.

IC Generic Source Guide
Includes alternate source information on digital, interface, microprocessor, audio/video, linear and memory ICs. ICs are grouped and sorted by generic or root number as an aid in identifying possible alternate sources.

Diode Replacement & Alternate Source Guide
Includes direct and suggested replacement information on diodes, including optoelectronic and microwave types. The Direct Replacement section contains information on devices that have the same part number as the device to be replaced. The Suggested Replacement section contains information on replacement devices with a different part number than the device to be replaced.

Transistor Replacement & Alternate Source Guide
Includes direct and suggested replacement information on transistor, including optoelectronic and microwave types. The Direct Replacement section contains information on devices that have the same part number as the device to be replaced. The Suggested Replacement section contains information on replacement devices with a different part number than the device to be replaced.

Thyristor Replacement & Alternate Source Guide
Includes direct and suggested replacement information on thyristor, including optoelectronic and microwave types. The Direct Replacement section contains information on devices that have the same part number as the device to be replaced. The Suggested Replacement section contains information on replacement devices with a different part number than the device to be replaced.

IC Replacement & Alternate Source Guide
Includes direct and suggested replacement information on digital, interface, microprocessor, audio/video, linear and memory ICs. The Direct Replacement section contains information on devices that have the same part number as the device to be replaced. The Suggested Replacement section contains information on replacement devices with a different part number than the device to be replaced.

IC Functional Equivalence Guide
Identifies memory, digital, interface and linear IC devices that have been determined to be pin-for-pin functionally equivalent. Highlights those devices whose functional equivalence has been verified by an independent testing laboratory.

International Directory of ICs & Discrete Semiconductors (Formerly Master Type Locator)
Consolidated listing of ICs, discrete semiconductors, optoelectronic and microwave devices in current production. Identifies the function of each device, its manufacturers and where to locate additional information on each device.

International Directory of Discontinued ICs & Discrete Semiconductors
Consolidated listing of ICs, discrete semiconductors, optoelectronic and microwave devices that are discontinued – no longer in production. Identifies the function of each device, its manufacturers and where to locate additional information.

D.A.T.A.BOOKS Alternate Source and Replacement Series	COMPONENT														
TITLE OF PUBLICATION	TRANSISTOR	DIODE	THYRISTOR	POWER SEMICONDUCTOR	DIGITAL ICs	INTERFACE ICs	LINEAR ICs	MEMORY ICs	AUDIO/VIDEO ICs	MICROPROCESSOR ICs	MICROCOMPUTER SYSTEMS	OPTOELECTRONICS	MICROWAVE	MODULES/HYBRIDS	POWER SUPPLIES
IC Replacement & Alternate Source Guide					●	●	●	●	●	●	●				
Diode Replacement & Alternate Source Guide		●		●								●	●		
Transistor Replacement & Alternate Source Guide	●			●								●	●		
Thyristor Replacement & Alternate Source Guide			●	●								●	●		
IC Generic Source Guide					●	●	●	●	●	●					
IC Functional Equivalence Guide					●	●	●	●							
International Directory of ICs & Discrete Semiconductors/International Directory of Discontinued ICs & Discrete Semiconductors	●	●	●	●	●	●	●	●	●	●	●	●	●	●	●

PART II: Locator information for the other D.A.T.A.BOOKS in the Electronic Information Series
At the left side of the matrix, locate the type of component for which you need detailed information such as design parameters, logic and outline drawings, names of manufacturers, etc. – then identify which D.A.T.A.BOOK you should consult.

	COMPONENT															
TITLE OF PUBLICATION	TRANSISTOR	DIODE	THYRISTOR	POWER SEMICONDUCTOR	DIGITAL ICs	INTERFACE ICs	LINEAR ICs	MEMORY ICs	AUDIO/VIDEO ICs	MICROPROCESSOR ICs	MICROCOMPUTER SYSTEMS	OPTOELECTRONICS	MICROWAVE	MODULES/HYBRIDS	POWER SUPPLIES	MILITARY ELECTRONIC DEVICES GUIDE
A/D Converter						●								●		●
A/A I/O Converter										●	●					
AC Switch (ACS)			●	●										●		
Active Filter							●									
A/D I/O Converter										●	●					
Adder: Half, Full					●											●
Adder/Subtractor					●											●
Address MUX/Refresh Counter						●										●
AFC Circuit									●							●
AGC Circuit									●							
ALARM Circuit							●									
ALU Status/Shift Controller										●						●
ALU					●											●
AM Receiver									●							
AM/FM RF-IF Circuit									●							●
Amorphous Sense Amplifier						●										
Amplifier-Antilog							●									
Amplifier-Audio									●					●		●
Amplifier-Buffer							●									●
Amplifier-CATV									●					●		
Amplifier-Current							●							●		●
Amplifier-Differential							●							●		●
Amplifier-Gas FET														●		
Amplifier-Instrumentation							●							●		●
Amplifier-Isolation							●							●		
Amplifier-Logarithmic							●							●		
Amplifier-Microwave													●			
Amplifier-Operational							●							●		●
Amplifier-Optoelectronic												●		●		
Amplifier, Power							●							●		●
Amplifier-Programmable Gain							●							●		●
Amplifier-Read/Write						●										
Amplifier-Reference							●									
Amplifier-RF/IF							●		●					●		●
Amplifier-Sample/Hold						●								●		●
Amplifier-Sense						●								●		
Amplifier-Sense-Mag Bubble Mem						●		●								●
Amplifier-Sense-Magnetic Tape						●										●
Amplifier-Sense-MOS						●										●
Amplifier-Sense-NMOS						●										●
Amplifier-Sense-Plated Wire						●										
Amplifier-Servo							●									
Amplifier-Squaring							●									●
Amplifier-Track & Hold						●								●		●
Amplifier-Video							●		●							●
Amplifier-VDLT							●									
Amplifier-Wideband							●		●					●		●
Analog Signal Level Detector							●							●		●
Analog MUX						●								●		●
Analog Multiplier							●									●
Analog Delay (SAD)							●									
Analog Shift Register							●									
Analog Switches-SPDT						●								●		●
Analog Switches-SSNC						●								●		●
Analog Switches-SSNO						●								●		●
Antilog Amplifiers							●									
Arithmetic Logic Unit					●											●
Array-Analog Switch						●										●

TITLE OF PUBLICATION	COMPONENT															
	TRANSISTOR	DIODE	THYRISTOR	POWER SEMICONDUCTOR	DIGITAL ICs	INTERFACE ICs	LINEAR ICs	MEMORY ICs	AUDIO/VIDEO ICs	MICROPROCESSOR ICs	MICROCOMPUTER SYSTEMS	OPTOELECTRONICS	MICROWAVE	MODULES/HYBRIDS	POWER SUPPLIES	MILITARY ELECTRONIC DEVICES GUIDE
Array-Diode		●														●
Array-LED												●				
Array-Photodiode												●				
Array-Phototransistor												●				
Array-Photovoltaic												●				
Array-Programmable Gate								●								●
Array-Programmable Logic								●								●
Array-Transistor							●									●
Astable Multivibrator					●											●
Attenuator							●									
Audio Amplifier									●							●
Audio Processor (Stereo/4 Channel)									●							
Automatic Call Processing Unit (ACPU)										●						
Automatic Frequency Control									●							●
Automatic Gain Control									●							●
Automotive ICs							●		●							
Avalanche Diode		●														●
Avalanche Mode Transistor	●															
Backward Diode													●			
Backward Wave Tube													●			
Bar Graph Display												●				
Bar Graph Generator						●										
Battery-on-Chip RAM								●								
Baud Rate Generator						●										●
Bi-Directional Transistor	●															
Bi-Directional Switch			●													
Binary Coded Decimal Counter					●											●
Bit Slice Correlator										●						
Bridges-Silicon Controlled			●													
Bridge Rectifier		●														
Bubble Memory/Support								●								
Buffer Amplifier							●									●
Buffer Hex Bus					●											●
Buffer/Driver						●				●						●
Buffer/Driver-Logic						●	●									●
Buffer Gates						●										●
Buffer Octal						●										●
Bus Arbiter										●						
Bus Controller										●						
Bus Driver						●										●
Bus Interface						●										●
Bus Receiver						●										●
Bus/Line Transceiver						●								●		●
Calculators									●							
Capstan/Servo Controller									●							
CAM								●								
CATV Amplifier									●							
CATV Amplifier Module														●		
Card Controller											●					
CPU Board											●					
CCD							●	●								
Channel Scanner									●							
Character Generator								●								
Charge-Coupled Device (CCD)							●	●								
Checker-Parity					●											●
Chip Set Microprocessor										●						
Chopper Stabilized Op Amp							●									
Circular Detector												●				
Clamp						●										
Clamp/Terminator						●								●		
Clock-Digital									●							
Clock Driver						●								●		●
Clock Generator/Driver										●						●
Clocks/Multivibrators					●											●
Code Converter								●								●
CODEC							●									
Color TV Circuits									●					●		
COMFET	●															

TITLE OF PUBLICATION	COMPONENT															
	TRANSISTOR	DIODE	THYRISTOR	POWER SEMICONDUCTOR	DIGITAL ICs	INTERFACE ICs	LINEAR ICs	MEMORY ICs	AUDIO/VIDEO ICs	MICROPROCESSOR ICs	MICROCOMPUTER SYSTEMS	OPTOELECTRONICS	MICROWAVE	MODULES/HYBRIDS	POWER SUPPLIES	MILITARY ELECTRONIC DEVICES GUIDE
Compact Disk Circuit									●							
Compact Disk D/A						●			●							
Compander							●									
Comparator-Current							●									
Comparator-Identity					●											●
Comparator-Magnitude					●											●
Comparator-Phase							●									
Comparator-Unified Bus					●											
Comparator-Voltage							●							●		●
Complementary Symm (PNP & NPN)	●						●									
Computer-on-a-chip										●						
Consumer Product Microprocessor										●						
Contact Protector Diode		●														●
Content Addressable Memory								●								
Control-Store Sequencer										●						
Controller-ALU Status										●						
Controller-Card											●					
Controller-Data Interface						●				●						●
Controller-DMA										●						
Controller-Diskette						●				●						
Controller-Display						●				●						
Controller-Floppy Disk						●				●						
Controller-Interrupt System										●						●
Controller-Industrial Timer					●											
Controller-Keyboard Encoder						●				●						
Controller-Magnetic Tape						●				●						
Controller-Memory/Interface						●				●						●
Controller-Microcomputer Bus										●						
Controller-Motor Speed							●		●					●		
Controller-Optoelectronic												●				
Controller-Paper Tape						●				●						
Controller-Power Supply							●									●
Controller-Printer						●				●						
Controller-Program Sequence										●						
Controller-Serial Communication						●				●	●					●
Controller-Shift										●						
Controller-Switching Power Supply							●									●
Controller-TTY Interface						●				●						
Controller-Winchester Chip (Flop Disk)						●					●					
Controls					●											
Controls/Counters/Converters					●											
Converter-A/D (All)						●								●		●
Converter-A to A I/O										●	●					
Converter-A to D I/O										●	●					
Converter-Code								●								●
Converter-D to A						●								●		●
Converter-D to A I/O										●	●					●
Converter-Digital to Synchro						●								●		
Converter-Freq. to DC							●							●		●
Converter, Hybrid, Volt-Freq.							●							●		
Converter-Logic Level						●								●		●
Converter-Volt to Current							●							●		
Converter-Voltage to Freq.							●							●		●
Converter Sub-System						●								●		●
Converter-Synchro to Digital														●		
Converters																●
Core Sense Amplifier						●										●
Counter-A/D Converter						●								●		●
Counter-BCD					●											●
Counter-Decimal					●											●
Counter-Display Driver						●										
Counter-Hexadecimal					●											●
Counter-Straight Binary					●											●
Counters					●											●
Crosspoint Switch							●									
CRT/Display Controller										●						

TITLE OF PUBLICATION	COMPONENT															
	TRANSISTOR	DIODE	THYRISTOR	POWER SEMICONDUCTOR	DIGITAL ICs	INTERFACE ICs	LINEAR ICs	MEMORY ICs	AUDIO/VIDEO ICs	MICROPROCESSOR ICs	MICROCOMPUTER SYSTEMS	OPTOELECTRONICS	MICROWAVE	MODULES/HYBRIDS	POWER SUPPLIES	MILITARY ELECTRONIC DEVICES GUIDE
CRT Correction Circuit									●							
Crystal Controlled Oscillator					●											●
Current Amplifier							●							●		●
Current Limiter		●					●									●
Current Mirror							●									
Current Source							●									●
Current Stabilizer							●							●		●
DAC Current Switching Network						●										
Darlington Transistor	●			●												●
Data Acquisition System						●				●				●		●
Data Interface Controller										●						●
Data Security Device										●						
Data Selectors/MUX's						●										●
DC/DC Converters															●	
DC/DC Converter Controller							●									
DC/DC Converter Support IC							●									
Decade Counter					●											
Decoder-Display Driver						●										●
Decoder-DTMF							●									
Decoder/Encoder					●				●					●		
Decoders					●											●
Decryption						●										
Dedicated Microcontroller										●						
Deglitcher						●										
Delay Line (Analog)							●		●					●		
Delay Line (Digital)					●											
Demodulator						●										
Demultiplexer										●						●
Demultiplexer-Digital						●										●
Detector-Carrier							●							●		
Detector Error/Corrector					●											●
Detector-Analog Signal Level							●							●		●
Detector-Address Mark										●						
Detector Devices-Microwave Video													●			
Detector-Emitter/Sensor Pairs/Arrays												●				
Detector-Fluid Level							●									
Detector-Gap												●				
Detector-Infrared												●				
Detector-Microwave													●			
Detector-Null												●				
Detector-Overvoltage							●									
Detector-Phase									●							●
Detector-Quadrant												●				
Detector-Reflex												●				
Detector-Thermopile												●				
Detector-Zero Crossing						●	●									●
Diac			●													
Dialer-DTMF						●										
Dialer-Phone							●									
Differential Amplifiers							●									●
Differential Line Driver/Transmitter						●										●
Differential Line Receiver						●										●
Differential Line Transceiver						●										●
Differential Pair-Temperature Cont.							●									
Digital Audio Circuit									●							
Digital Multiplexer						●										●
Digital Panel Meter Circuit						●								●		
Digital Signal Processor										●						
Digital to Synchro Converter														●		
Diode-Array		●														●
Diode-Avalanche		●														●
Diode-Backward													●			
Diode-Breakover		●														
Diode-Bridge		●														●
Diode-Contact Protector		●														●
Diode-Current Limiter		●					●									●

TITLE OF PUBLICATION	COMPONENT															
	TRANSISTOR	DIODE	THYRISTOR	POWER SEMICONDUCTOR	DIGITAL ICs	INTERFACE ICs	LINEAR ICs	MEMORY ICs	AUDIO/VIDEO ICs	MICROPROCESSOR ICs	MICROCOMPUTER SYSTEMS	OPTOELECTRONICS	MICROWAVE	MODULES/HYBRIDS	POWER SUPPLIES	MILITARY ELECTRONIC DEVICES GUIDE
Diode-Detector													●			●
Diode-Detector-UHF		●														●
Diode-Gunn													●			
Diode-Harmonic Generator													●			
Diode-Impatt													●			
Diode-Infrared Emitter												●				
Diode-Infrared Emitter-Array												●				
Diode-Infrared Emitter-Laser												●				
Diode-Infrared Emitter-Negative Resis.												●				
Diode-JFET		●														●
Diode-Laser-LED												●				
Diode-LED												●				●
Diode-LED-Array												●				
Diode-Light Emitting												●				●
Diode-Limiter		●											●			●
Diode-Logarithmic Conversion		●														
Diode-Matched		●														●
Diode-Matrixes		●														●
Diode-Microwave-Mixer													●			
Diode-Negative Resistive-LED												●				
Diode-Noise		●											●			
Diode-Noise Generator		●														
Diode-Oscillator													●			
Diode-PIN												●	●			
Diode-Radiation Detector		●														
Diode-Radiation Resistant		●														●
Diode-Rectifier		●		●												●
Diode-Reference		●														●
Diode-Ring/Quad													●			
Diode-Schottky Barrier		●														●
Diode-Shockley			●													
Diode-Silicon Asym Trigger (SAT)			●													
Diode-Step Recovery													●			●
Diode-Switching		●														●
Diode-Transient Voltage Suppressor		●														●
Diode-Tuning		●											●			●
Diode-Tunnel													●			●
Diode-UHF Detector		●											●			●
Diode-UHF Mixer		●											●			●
Diode-Varactor		●											●			●
Diode-Varistor		●														
Diode-Voltage Regulator		●														●
Diode Array		●														●
Diode Matrix		●														●
Diodes		●														●
Diodes-Zener		●		●												●
Diskette Controller						●				●	●					
Disk Interface Circuit						●										
Display-Integrated Logic												●				
Display-LED												●				
Display-Liquid Crystal												●				
Display-Misc.(Incand.,Gas,Disch.,etc.)												●				
Display-Multiplexer						●								●		
Display-Oscillator						●								●		
Display-Shift Register						●								●		
Display Controller										●	●					
Display Driver-Multiplexer						●								●		●
Display Driver-Shift Register						●								●		
Display Driver/Counter						●								●		●
Display Driver/Decoder						●								●		
Display Driver/Latch						●								●		
Display Driver/Oscillator						●								●		
Divider														●		●
Divider, Frequency					●											●
DMA Controller										●						
DPM Module						●								●		

TITLE OF PUBLICATION	COMPONENT															
	TRANSISTOR	DIODE	THYRISTOR	POWER SEMICONDUCTOR	DIGITAL ICs	INTERFACE ICs	LINEAR ICs	MEMORY ICs	AUDIO/VIDEO ICs	MICROPROCESSOR ICs	MICROCOMPUTER SYSTEMS	OPTOELECTRONICS	MICROWAVE	MODULES/HYBRIDS	POWER SUPPLIES	MILITARY ELECTRONIC DEVICES GUIDE
Driver-Bus						●										●
Driver-Clock						●								●		●
Driver-Clock Generator										●						●
Driver-Display (Digital)						●								●		
Driver-Line						●										
Driver-Memory						●								●		●
Driver-Optoelect Photoelectronic, IR												●				
Driver-Peripheral						●										●
Driver-Power						●								●		●
Drivers/Predrivers/Scalers					●											●
DTMF Decoder							●							●		
DTMF Dialer							●							●		
DTMF Filter							●							●		
DTMF Generator							●							●		
DTMF Receiver							●							●		
Dual Gate MOSFET	●															
Dual/Quad Transistor	●						●									●
Dual Ramp (Slope)-A/D Converter						●								●		●
Duplexer Tube													●			●
DVM Module						●										
Emitter-Sensor Array Detector												●				
Emitter-Sensor Pair Detector												●				
Emitter Array												●				●
Encoder-Keyboard						●										
Encoder-Priority						●										●
Encoder-"X" Input to "Y" Output																●
Encoder-"X" Line to "Y" Line																●
Encoder/Decoder					●									●		●
Encoder/Decoder Remote Cont. Sets									●							
Encryption																●
Erasable Programmable Logic								●								
EAROM								●								
EPROM								●								
EEPROM								●								
Error Detection/Correction Unit										●						
Facsimile Circuit							●									
Fast Carry Counter					●											●
Fast Recovery Diode		●														
Fiberoptic XCURS/XMTRS												●				
Field Effect Transistor	●			●												●
Field Prog Logic Array (FPLA)								●								●
FIFO								●								
FIFO Support Circuit								●								
Filter-Active							●							●		
Filter-DTMF, Telecomm Equipment							●									
Filter (Transversal)							●									
Flip/Flop					●											●
Flip/Flop (J-K)					●											●
Flip/Flop (R-S)					●											●
Flip/Flop (R-S-T)					●											●
Flip/Flop (T)					●											●
Flip/Flop, Complementary (R-S)					●											●
Flip/Flop (D Type)					●											●
Floppy Disk Controller										●	●					
Floppy Disk Read Amplifier						●										
Fluid Detector							●									
FM Multiplexer									●					●		
FM Receiver									●							
Frequency Divider					●											●
Frequency Synthesizer							●									●
Frequency to DC Converter							●							●		●
Full Adder					●											●
Function Generator							●							●		●
Fuse Programmable ICs								●								
Game-Video									●							
Gap Detector												●				
Gate Turnoff			●	●												

TITLE OF PUBLICATION	COMPONENT															
	TRANSISTOR	DIODE	THYRISTOR	POWER SEMICONDUCTOR	DIGITAL ICs	INTERFACE ICs	LINEAR ICs	MEMORY ICs	AUDIO/VIDEO ICs	MICROPROCESSOR ICs	MICROCOMPUTER SYSTEMS	OPTOELECTRONICS	MICROWAVE	MODULES/HYBRIDS	POWER SUPPLIES	MILITARY ELECTRONIC DEVICES GUIDE
Gates					●											●
Generator					●											
Generator-Baud Rate						●										
Generator-Character								●								
Generator-Clock										●						●
Generator-DTMF						●										
Generator-Function							●							●		●
Generator-Look-ahead Carry					●											●
Generator-Parity Checker					●											●
Generator-Sin/Cos Function							●							●		
Generator-Digital Function					●											●
Generator/Oscillator-Sine/Sq/Tri							●									
Generic Array Logic								●								
Generator-Video Display									●							
Gray Code Counter					●											
Ground Fault Interrupt							●									
Gunn Diode													●			
Half Adder					●											
Hall Effect Device							●									
Hard Array Logic								●								
Harmonic Generator Diode													●			
Hearing Aid Amplifier									●							
Hex Bus Buffer, Inverting/Non-Invert					●											●
Hexadecimal Counter					●											●
High Voltage/High Current Driver														●		●
Home Appliance Circuit									●							
I/O Converter										●						
I/O Modules														●		
Identity Comparator					●											●
IGBIT	●															
Image Scanning/Matrix Sensor												●				
Infrared Detector												●				
Infrared Emitting Diode												●				
Instrumentation Amplifier							●									
Integrated Logic/Display												●				
Integrated Thyristor/Rectifier (ITR)			●													
Intelligent Display												●				
Interface-General Purpose										●						●
Interface-Parallel Peripheral										●						●
Interface-Programmable										●						●
Interrupt System-Priority Encoder						●				●						●
Interrupt System Controller										●						●
Interrupter (Optical)												●				
Inverters-Hex						●										●
I/O Peripheral										●						●
ISDN ICs						●				●						
Isolation Amplifier							●									
Keyboard Encoder						●										
Keyboard Encoder Controller										●	●					
Keyless Lock CKT						●			●							
Klystron Tube													●			
Ladder Network						●										
Laser Diode												●				
Latches					●											●
Latches Display						●										
LC Oscillator					●											
LDR-Light Dependent Resistor												●				
LED-Negative Resistive												●				
LED Array												●				
LED Display												●				
LED-Dichromatic, Multicolor												●				
Level Detector, Analog							●							●		●
Level Detector, Voltage							●									●
LIFO								●								
Light Activated Switch			●	●								●				
Light Dependent Resistor												●				
Light Dimmer Circuit							●		●							

TITLE OF PUBLICATION	COMPONENT															
	TRANSISTOR	DIODE	THYRISTOR	POWER SEMICONDUCTOR	DIGITAL ICs	INTERFACE ICs	LINEAR ICs	MEMORY ICs	AUDIO/VIDEO ICs	MICROPROCESSOR ICs	MICROCOMPUTER SYSTEMS	OPTOELECTRONICS	MICROWAVE	MODULES/HYBRIDS	POWER SUPPLIES	MILITARY ELECTRONIC DEVICES GUIDE
Light Emitting Diode												●				●
Light Pen												●				
Limiter-Current		●					●									●
Limiter-Microwave													●			
Limiter-Voltage							●									●
Line Driver/Transmitter-Differential						●										●
Line Driver/Transmitter-Single-Ended						●										●
Line Receiver-Differential						●										●
Line Receiver-Single-Ended						●										●
Line Scanning Sensor												●				
Line Transceiver-Differential						●										●
Line Transceiver-Single-Ended						●										●
Linear Power Supplies																
Liquid Crystal Display												●				
Logarithmic Amplifier							●							●		
Logic-Special Device					●											●
Logic Buffer/Driver						●										●
Logic Level Converter						●								●		●
Logic Level Translators						●										●
Logarithmic Conversion Diode		●														
Look-Ahead Carry Generator					●											●
Magnetic Bubble Memory								●								●
Magnetic Bubble Memory Sense Amp.						●										
Magnetic Tape Controller										●	●					
Magnetic Tape Preamplifier						●										
Magnetic Tape Sense Amplifier						●										
Magnetron Tube													●			
Magnitude Comparator					●											●
Manchester Encoder/Decoder						●										
Matched Pair (PNP & NPN)	●						●								●	
Matrix/Image Scanning Sensor												●				
Melody Generator ICs									●							
Memory-Content Addressable								●								
Memory-Magnetic Bubble								●								
Memory-Mgmt Unit										●						
Memory Driver						●		●						●		
Memory Interface Controller										●	●					●
Memory Interface Sub-system						●										●
Memory Support Circuit								●								
Microcomputer Bus Controller										●						●
Microcomputer Chip Sets										●						
Microcontroller										●						●
Microprocessor-Card Set											●					
Microprocessor-Chip-Single										●						
Microprocessor-Chip-Set										●						
Microprocessor Converter										●						
Microwave-Ring/Bridge Quad													●			
Microwave-Special Device													●			
Microwave Amplifier													●			
Microwave Detector													●			
Microwave Limiter													●			
Microwave Mixer Diode													●			
Microwave Oscillator													●			
Microwave Transistor													●			
Microwave Trans.-Junction Field Eff.													●			
Microwave Transistor-MOSFET													●			
Microwave Video Detector Devices													●			
Mixer, Microwave													●	●		
Mixer/IF Strip/Front End							●		●							●
MOD/DEMOD-Slope Delta (Telephone)							●									
MODEM							●		●					●		
Modulator-Pulse Width							●									●
Modulator-Ring							●									
Monostable Multivibrator					●											●
MOS FET-Microwave													●			
MOS Sense Amplifier						●										●
Motion Detector									●							
Motor Speed Controller							●		●					●		

TITLE OF PUBLICATION	COMPONENT															
	TRANSISTOR	DIODE	THYRISTOR	POWER SEMICONDUCTOR	DIGITAL ICs	INTERFACE ICs	LINEAR ICs	MEMORY ICs	AUDIO/VIDEO ICs	MICROPROCESSOR ICs	MICROCOMPUTER SYSTEMS	OPTOELECTRONICS	MICROWAVE	MODULES/HYBRIDS	POWER SUPPLIES	MILITARY ELECTRONIC DEVICES GUIDE
Motor Starting CKT							●									
Music Synthesizer ICs							●		●							
Multiplexer						●										●
Multiplexer-FM									●					●		
Multiplier					●		●	●					●	●		●
Multivibrator-Astable					●											●
Multivibrator-Monostable					●		●									●
MUX-Analog						●								●		●
MUX-Display						●										
MUX-Digital						●										●
MUX-Programmable								●								●
Negative Resistive LED												●				●
NMOS Sense Amplifier						●										
Noise Diode													●			
Noise Generator Circuit							●									
Noise Generator Diode		●														
Non-Volatile RAM (NVRAM)								●								
Null Detector												●				
On-Screen Display ICs									●							
Operational Amplifiers							●							●		●
Optical Limit Switch												●				
Optically Isolated Logic Gate												●				
Optoelectronic Amplifier												●				
Optoelectronic Controller												●				
Optoelectronic Driver												●				
Optoelectronic Switch or Relay												●				
Opto-isolator												●				●
Oscillator							●							●		●
Oscillator Diode													●			
Oscillator-Crystal Controlled					●											
Oscillator-Display						●										
Oscillator-LC					●											
Oscillator-Microwave													●			
Oscillator-RC					●		●									●
Oscillator-Sine/Sq/Triangle Wave							●							●		
Oscillator-Tuning Fork					●											
Oscillator-Varactor Tuner													●			
Oscillator-Voltage Controlled					●									●		●
Oscillator-Volt. Controlled Crystal							●									
Over Voltage Protector							●							●		●
Paper Tape Controller						●				●						
Parallel A/D Converter						●								●		●
Parallel Communication Transceiver										●						
Parallel Peripheral Interface										●						●
Parity Generator/Checker					●											●
Peltier Module							●									
Peripheral Driver						●										●
Peripheral Interface Adapter (PIA)										●						●
PGA (Programmable Gate Array)								●								●
Phase Control Circuit							●							●		●
Phase/Frequency Detector							●		●							●
Phase Lock Loop							●							●		●
Phonograph Motor Control									●							
Photo Circuit												●				
Photoconductive Cell												●				
Photocoupler-Photocell Output												●				
Photocoupler-Photocircuit Output												●				
Photocoupler-Photodarlington Output												●				
Photocoupler-Photothyristor Output												●				
Photocoupler-Phototransistor Output												●				
Photodarlington												●				
Photodiode												●				
Photodiode, IR Detector												●				
Photodiode, LASER Detector												●				
Photodiode Array												●				
Photo Potentiometer												●				
Photothyristor												●				

TITLE OF PUBLICATION	COMPONENT															
	TRANSISTOR	DIODE	THYRISTOR	POWER SEMICONDUCTOR	DIGITAL ICs	INTERFACE ICs	LINEAR ICs	MEMORY ICs	AUDIO/VIDEO ICs	MICROPROCESSOR ICs	MICROCOMPUTER SYSTEMS	OPTOELECTRONICS	MICROWAVE	MODULES/HYBRIDS	POWER SUPPLIES	MILITARY ELECTRONIC DEVICES GUIDE
Phototransistor												●				
Phototransistor Array												●				
Photovoltaic Array												●				
Photovoltaic Cell (Solar;IR Detectors)												●				
PIN Diode													●			
PIN Photo Diode												●				
PLA (Programmable Logic Array)								●								
PLL-Phase Lock Loop							●									●
PLS (Programmable Logic Sequence)								●								
Potentiometer Circuit							●									
Potentiometer-Photo												●				
Power-Integrated Thyristor/Rectifier			●	●												
Power-SCR			●	●												●
Power-Triac			●	●												
Power Device						●										●
Power-Drivers Peripheral						●								●		●
Power Supplies Linear															●	
Power Supplies Switching															●	
Power Supply-Switching-Controller							●									●
Power Supply Controller, TV							●		●							
Pre-drivers					●											●
Prescaler					●				●							●
Pressure/Temp Sensor Transistor							●									
Printer Controller										●	●					
Priority Encoder						●										●
Priority Encoder-Interrupt System						●				●						●
Program Sequence Controller										●						
Program Storage Unit (PSU)								●		●						
Programmable Gain Amplifier							●							●		●
Programmable Gate Array (PGA)								●								●
Programmable Interface						●										●
Programmable Logic Array (PLA)								●								●
Programmable Logic Sequence (PLS)								●								
Programmable Multiplexer								●								●
Programmable Power Source						●								●		
Programmable Read Only Memory								●								●
Programmable ROM Patch (PRP)								●								
Prog. Unijunc. Trans. (PUT)-Thyristor			●													●
Programmer/Sequencer						●								●		
PROM								●								●
PROM (Low Programming Voltage)								●								
Proximity Switch, Solid State							●									
PRP (Programmable ROM Patch)								●								
PSU (Program Storage Unit)								●		●						
Pulse Dialer						●										
Pulse Width Modulator							●									●
Pulse Width Modulator Control CKT							●									●
PUT (Prog. Unijunction Trans.)			●													●
Pyroelectric Detector												●				
Quadrant Detector												●				
Radiation Detector Diode		●														
Radiation Resistant Diode		●														●
Radiation Resistant Transistor	●															●
Radio, AM									●							
Radio, FM									●							
RAM								●		●						●
RAM-I/O-Timer										●						
RAM Module (multi-chip)								●								
Rate Multiplier					●											
RC Oscillator					●											●
RC Timer					●											●
RCT (Reverse Conducting Triode)			●	●												
Read/Write Memory								●		●						●
Receiver-DTMF						●										
Rectifier		●		●												●
Rectifier-Bridge		●														●
Rectifier Diode		●		●												●

TITLE OF PUBLICATION	COMPONENT															
	TRANSISTOR	DIODE	THYRISTOR	POWER SEMICONDUCTOR	DIGITAL ICs	INTERFACE ICs	LINEAR ICs	MEMORY ICs	AUDIO/VIDEO ICs	MICROPROCESSOR ICs	MICROCOMPUTER SYSTEMS	OPTOELECTRONICS	MICROWAVE	MODULES/HYBRIDS	POWER SUPPLIES	MILITARY ELECTRONIC DEVICES GUIDE
Rectifier-Silicon Controlled			●	●												●
Reference Amplifier							●							●		
Reference Diode		●														●
Reflex Detector												●				
Register File								●								●
Regulator-Voltage							●							●		●
Relay Lamp Driver						●										
Relay Solid State						●										
Remote Control Unit-General Purpose						●			●							
Remote Control Unit-Receiver									●							
Remote Control Unit-Transmitter									●							
Repertory Dialer							●									
Resolver to Digital A/D Converter						●										
Reverse Conducting Triode (RCT)			●	●												
RF/IF Amplifiers							●		●					●		●
RF Power Amplifier Transistor	●															●
RF Signal Processing ICs							●		●							
Ring/Bridge Quad													●			●
Ring/Johnson Counter					●											●
Ring Modulator							●									
Ring/Quad Diode													●			
RMS to DC Converter							●									
ROM								●		●						●
ROM, Speech Synthesis									●							
SAS			●													
Sample/Hold						●								●		●
Sample/Hold Amplifier						●								●		●
SAT (Silicon Asymmetrical Trigger)			●													
SBS (Silicon Bi-directional Switch)			●													
SCA (Silicon Controlled Assembly)			●													
Scaler					●											
Schmitt Trigger						●										●
Schottky-Barrier Diode		●														●
SCR			●	●												●
Sense Amplifier						●										●
Sense Amplifier-Amorphous						●										
Sense Amplifier-Core						●										●
Sense Amp-Magnetic Bubble Mem.						●										●
Sense Amplifier-Magnetic Tape						●										●
Sense Amplifier-MOS						●										●
Sense Amplifier-NMOS						●										●
SenseFET	●															
Sensor-Array-Photodiode												●				
Sensor-Array-Phototransistor												●				
Sensor-Array-Photovoltaic												●				
Sensor-Line-Scanning												●				
Sensor-Matrix/Image Scanning												●				
Sensor-Photocircuit-Camera Control									●			●				
Sensor-Photocircuit-Darlington Stage												●				
Sensor-Photocircuit-Light to Freq.												●				
Sensor-Photocircuit-Multifunc. Proc.												●				
Sensor-Photocircuit-Oper. Amp.												●				
Sensor-Photocircuit-Optical Receiv.												●				
Sensor-Photocircuit-Oscillator												●				
Sensor-Photocircuit-Schmitt Trigger												●				
Sensor-Photocircuit-Transistor Stage												●				
Sensor-Photoconductive Cell												●				
Sensor-Photodarlington												●				
Sensor-Photodiode-Avalanche												●				
Sensor-Photodiode-IR Detector												●				
Sensor-Photodiode-Laser Detector												●				
Sensor-Photodiode-Multielement												●				
Sensor-Photodiode-Pin												●				
Sensor-Photodiode-Special Purpose												●				
Sensor-Photothyristor												●				
Sensor-Phototransistor-Field Eff.												●				
Sensor-Photovoltaic Cell												●				

TITLE OF PUBLICATION	COMPONENT															
	TRANSISTOR	DIODE	THYRISTOR	POWER SEMICONDUCTOR	DIGITAL ICs	INTERFACE ICs	LINEAR ICs	MEMORY ICs	AUDIO/VIDEO ICs	MICROPROCESSOR ICs	MICROCOMPUTER SYSTEMS	OPTOELECTRONICS	MICROWAVE	MODULES/HYBRIDS	POWER SUPPLIES	MILITARY ELECTRONIC DEVICES GUIDE
Sensor-Temperature							●									●
Serial Communication Controller						●					●					
Servo Amplifier							●									
Shift Controller										●						
Shift Matrix								●								
Shift Register								●								●
Shift Register/Analog							●									
Shockley Diode			●													
Signal Processor						●	●		●					●		
Signal Conditioner						●	●							●		
Silicon Asymm. Switch (SAS) Trig.			●													
Silicon Asymmetrical Trigger (SAT)			●													
Silicon Bi-directional Switch (SBS)			●													
Silicon Bi-directional Switch Trigger			●													
Silicon Controlled Assembly (SCA)			●													
Silicon Controlled Bridges			●													
Silicon Controlled Rectifier (SCR)			●	●												●
Silicon Controlled Switches (4 Term)			●													
Silicon Field Effect Trans.-P Channel	●			●												●
Silicon Field Effect Trans.-N Channel	●			●												●
Silicon Unidirectional Switch			●													
Sin/Cos Function Generator							●							●		●
Sine/Square/Triangle Wave Oscillator							●							●		●
Single Chip Microprocessor										●						●
Single Ended Line Driver/Transmitter						●										●
Single Ended Line Receiver						●										●
Single Ended Line Transceiver						●										●
Solar Cell												●				
Solid State Cooling Device							●									
Solid State Relay														●		
Solid State Relay (Optically Coupled)												●		●		
Solid State Video Sensor												●				
Speech Circuit (telephone)							●									
Speech Generator									●							
Speech Synthesizer									●							
SPDT Analog Gate Switches						●										●
Squaring Amplifier							●									●
SSNC Analog Gate Switches						●										●
SSNO Analog Gate Switches						●										●
Stabilizer-Current							●							●		●
Stabilizer-Voltage							●							●		●
Stabistor-Regulating Diode		●														●
Static Column Dynamic RAM								●								
Step Recovery Diode													●			●
Stepper Motor Circuit							●									
Stereo Decoder									●							
Stereo Power Amplifier									●							
Storage Register								●								●
Storage-Special Device					●											●
Storage/Shift Register/RAM-ROM								●								●
Straight Binary Counter					●											●
Subscriber Loop Interface (SLIC)						●	●									
Subtractor					●											●
Successive Approx A/D Converter						●								●		●
Successive Approximation Register						●								●		
Surface Acoustic (SAW) Filter									●							
Surge Suppressor Diode		●														
SUS (Silicon Unidirectional Switch)			●													
Switch-Cross Point							●									
Switch-Debouncer						●										
Switch-Hall Effect							●									
Switch-Light Activated			●	●												
Switch-Optical Limit												●				

TITLE OF PUBLICATION	COMPONENT															
	TRANSISTOR	DIODE	THYRISTOR	POWER SEMICONDUCTOR	DIGITAL ICs	INTERFACE ICs	LINEAR ICs	MEMORY ICs	AUDIO/VIDEO ICs	MICROPROCESSOR ICs	MICROCOMPUTER SYSTEMS	OPTOELECTRONICS	MICROWAVE	MODULES/HYBRIDS	POWER SUPPLIES	MILITARY ELECTRONIC DEVICES GUIDE
Switch, Proximity, Solid State							●									
Switch-Silicon Unidirectional			●													
Switch-Solid State					●								●			
Switch-Zero Voltage							●									●
Switch, Touch Control, Interface						●										
Switch Driver						●								●		●
Switches (4 Term)-Silicon Controlled			●													
Switch Mode Regulator							●									●
Switching Diode		●														●
Switching Network-DAC Current						●										
Switching Power Supply Controller							●									●
Switching Power Supplies																
Switching Transistor	●			●									●			●
Switching Voltage Regulator							●									●
Synchro Conversion Device						●								●		
Synchro Related Devices						●										
Synchro to Digital A/D Converter						●										
T-1 Interface						●	●									
Tape Deck Motor Control									●							
Tape Deck Control IC									●							
Tape System									●							
Telephone Switching Circuit							●									
Telex Circuit							●									
Telecom. Device (Telephone)						●								●		
Temp. Controlled Differential Pair							●									
Temperature Transducer						●	●									
Terminator						●										
Thermopile Detector												●				
Thyristor-ACS-AC Switch			●	●												
Thyristor-GTO-Gate Turnoff Device			●	●												
Thyristor-ITR-Integrated			●	●												
Thyristor/Rectifier			●	●												●
Thyristor-LAS-Light Activated Switch			●	●												
Transistor (PUT)			●													●
Thyristor-RCT-Rev Conducting Triode			●	●												
Thyristor-Silicon Asym. Switch (SAS)			●													
Thyristor-Silicon Bidirect Switch (SBS)			●													
Thyristor-Silicon Unidirect Switch (SUS)			●													
Time Base/Counter					●											●
Time Delays					●											
Timer-RC					●		●									●
Time Slot Assigner Circuit							●									
Tone Ringer							●									
Touch Control Switch Interface							●		●							
Track & Hold Amplifier						●								●		●
Transceiver-Line						●										●
Transceiver-Parallel Communications						●										●
Transducer-Device						●								●		
Transient Voltage Suppressor Diode		●														●
Transistor-Avalanche Mode	●															
Transistor-Bidirectional	●															
Transistor-Complementary Symmetry	●															●
Transistor-Darlington	●			●												●
Transistor-Dual/Quad	●						●									●
Transistor-Field Effect	●			●												●
Transistor-Field Effect-N Channel	●			●												●
Transistor-Field Effect-P Channel	●			●												●
Transistor-Junction Field Effect MW													●			
Transistor-Matched Pair	●															●
Transistor-Microwave													●			
Transistor-MOSFET-Microwave													●			
Transistor-NPN-HiPower-Germanium	●			●												●
Transistor-NPN-HiPower-Silicon	●			●												●
Transistor-NPN-LoPower-Germanium	●															●
Transistor-NPN-LoPower-Silicon	●															●
Transistor-Photo												●				

TITLE OF PUBLICATION	COMPONENT															
	TRANSISTOR	DIODE	THYRISTOR	POWER SEMICONDUCTOR	DIGITAL ICs	INTERFACE ICs	LINEAR ICs	MEMORY ICs	AUDIO/VIDEO ICs	MICROPROCESSOR ICs	MICROCOMPUTER SYSTEMS	OPTOELECTRONICS	MICROWAVE	MODULES/HYBRIDS	POWER SUPPLIES	MILITARY ELECTRONIC DEVICES GUIDE
Transistor-PNP-HiPower-Germanium	●			●												●
Transistor-PNP-HiPower-Silicon	●			●												●
Transistor-PNP-LoPower-Germanium	●															●
Transistor-PNP-LoPower-Silicon	●															●
Transistor-Pressure/Temp. Sensor	●						●									
Transistor-Programmable Unijunction			●													
Transistor-Radiation Resistant	●															●
Transistor-Silicon Field Eff. N Channel	●			●												●
Transistor-Silicon Field Eff. P Channel	●			●												●
Transistor-Switching	●			●									●			●
Transistor-UHF/Microwave													●			
Transistor-Unijunction N	●															●
Transistor-Unijunction P	●															●
Transistor Array	●															●
Transistor Chips	●															
Transistor Chopper	●															●
Translators-Logic Level						●										●
Transmitter/Encoder						●										
Traveling Wave Tube													●			
Triac			●	●												
Trigger-Schmitt						●										●
Trigger-Silicon Asymmetrical			●													
Trigger-Silicon Asymmetrical Switch			●													
Triode-Reverse Conducting			●	●												
TTY Interface/Controller						●				●						
Tube-Backward Wave													●			
Tube-Duplexer													●			
Tube-Klystron													●			
Tube-Magnetron													●			
Tube-Traveling Wave													●			
Tuning Fork Controlled Oscillator					●											
Tunnel Diode													●			●
TV-B/W									●							
TV-Color									●							
UART						●				●				●		●
UHF Detector Diode		●											●			●
UHF Mixer Diode		●											●			●
UHF Microwave Transistor													●			
Ultrasonic Device						●			●							
Unified Bus Comparator					●											
Unijunction Transistor-Programmable			●													●
Univ Asynchronous Rec/Trans						●				●				●		●
Univ Synchronous Rec/Trans						●				●				●		●
(USYNR/T)						●				●						
USYNRT						●				●						
UVEPROM								●								
Varactor Diode													●			●
Varistor		●														
Video Circuits									●							●
VCR Motor Control									●							
VCR REC/PLAY Circuit									●							
Video Detector Devices													●			●
Video Game									●							
Video Modulator							●		●							●
Videotext Display ICs									●							
Voice/Data Circuit							●									
Voice Synthesis									●							
Voltage Comparator							●							●		●
Voltage Controlled Amp							●									
Voltage Controlled Crystal Oscillator					●		●									
Voltage Controlled Oscillator					●		●		●					●		●
Voltage Follower							●							●		●
Voltage Level Detector							●									●
Voltage Limiter							●									●
Voltage Reference Precision							●									●
Voltage Reference Amplifier							●									

TITLE OF PUBLICATION	COMPONENT															
	TRANSISTOR	DIODE	THYRISTOR	POWER SEMICONDUCTOR	DIGITAL ICs	INTERFACE ICs	LINEAR ICs	MEMORY ICs	AUDIO/VIDEO ICs	MICROPROCESSOR ICs	MICROCOMPUTER SYSTEMS	OPTOELECTRONICS	MICROWAVE	MODULES/HYBRIDS	POWER SUPPLIES	MILITARY ELECTRONIC DEVICES GUIDE
Voltage Regulator							●		●					●		●
Voltage Regulator-Diode		●														●
Voltage Stabilizer							●		●					●		●
Voltage to Frequency Converter							●							●		●
Voltage Variable Capacitor													●			●
Wideband Amplifier							●		●					●		●
Window Detector							●									●
X.25 Protocol ICs						●	●			●						
X-Mitter (UART)						●										●
X-Mitter (USYNR/T)						●										
XTAL Oscillator (external XTAL)					●											
XTAL Oscillator w/XTAL														●		
Zero Voltage Switch							●									

TYPE NO. CROSS INDEX

1. TYPE No. CROSS INDEX

IN TYPE NUMBER SEQUENCE

TYPE No.	MFRS	Pg&Line
1A48B	♦HAFO	84 - 28
1A48C	♦HAFO	84 - 74
1A83	♦HAFO	86 - 33
1A104	♦HAFO	85 - 59
1A124	♦HAFO	81 - 21
1A130	♦HAFO	111 - 45
1A137	♦HAFO	83 - 85
1A148	♦HAFO	83 - 84
1N5722	♦TII	116 - 66
1N5723	♦TII	118 - 29
1N5724	♦TII	118 -104
1N5725	♦TII	119 - 54
1N5765	♦HPA	43 -107
1N6092	♦HPA	47 - 18
1N6093	♦HPA	63 - 52
1N6094	♦HPA	72 - 21
1N6264	♦GESY	86 - 18
1N6265	♦GESY	86 - 19
1N6266	♦GESY	81 - 52
2-312	BAR	111 - 41
2B50B(2)	♦HAFO	119 - 27
2B50C	♦HAFO	119 - 94
2N5777	♦GESY	121 - 33
2RAG3011XXX	♦LWE	91 - 32
2RAG3012XXX	♦LWE	91 - 33
2RAR3005XXX	♦LWE	91 - 24
2RAR3009XXX	♦LWE	91 - 26
2RAR3010XXX	♦LWE	91 - 25
2RAY3013XXX	♦LWE	91 - 28
2RAY3014XXX	♦LWE	91 - 29
2SC2072-1	♦SONY	115 - 51
2SC2072-2	♦SONY	115 - 52
2SM1020A4	INRI	146 - 5
2SM1020A4PL	♦INRI	146 - 6
2SM1020A4T	♦INRI	146 - 7
2SM1020A5	INRI	146 - 11
2SM1020A5PL	♦INRI	146 - 12
2SM1020A5T	♦INRI	146 - 13
2SM1020A6	INRI	146 - 17
2SM1020A6PL	♦INRI	146 - 18
2SM1020A6T	♦INRI	146 - 19
2SM1020A7	INRI	146 - 23
2SM1020A7PL	♦INRI	146 - 24
2SM1020A7T	♦INRI	146 - 25
2SM1020A8	INRI	146 - 29
2SM1020A8PL	♦INRI	146 - 30
2SM1020A8T	INRI	146 - 31
2SM1020E4	INRI	146 - 8
2SM1020E4PL	♦INRI	146 - 9
2SM1020E4T	♦INRI	146 - 10
2SM1020E5	INRI	146 - 14
2SM1020E5PL	♦INRI	146 - 15
2SM1020E5T	♦INRI	146 - 16
2SM1020E6	INRI	146 - 20
2SM1020E6PL	INRI	146 - 21
2SM1020E6T	♦INRI	146 - 22
2SM1020E7	INRI	146 - 26
2SM1020E7PL	♦INRI	146 - 27
2SM1020E7T	INRI	146 - 28
2SM1020GE8	INRI	146 - 32
2SM1020GE8PL	♦INRI	146 - 33
2SM1020GE8T	♦INRI	146 - 34
2SM1020GE9	INRI	146 - 35
2SM1020GE9PL	♦INRI	146 - 36
2SM1020GE9T	♦INRI	146 - 37
2SM1020GE10	INRI	146 - 38
2SM1020GE10PL	INRI	146 - 39
2SM1020GE10T	♦INRI	146 - 40
003PV-TO18	QTC	108 - 36
3C63B	HAFO	166 - 77
3C63C	HAFO	166 - 85
3C91B	♦HAFO	164 - 42
3C91C	♦ALGG	164 - 50
	♦HAFO	
3C92B	♦HAFO	164 - 43
3C92C	♦ALGG	164 - 51
	♦HAFO	
3N243	♦MPI	164 - 69
	♦TRWO	
3N244	♦MPI	164 - 73
	♦TRWO	
3N245	♦MPI	164 - 76
	♦TRWO	
3N261	♦TII	164 - 90
3N262	♦TII	164 - 82
3N263	♦TII	164 - 86
3RAG3011XXX	♦LWE	91 - 44
3RAG3012XXX	♦LWE	91 - 45
3RAR3005XXX	♦LWE	91 - 36
3RAR3009XXX	♦LWE	91 - 38
3RAR3010XXX	♦LWE	91 - 37
3RAY3013XXX	♦LWE	91 - 40
3RAY3014XXX	♦LWE	91 - 41
3SM1020A4	INRI	146 - 45
3SM1020A4PL	♦INRI	146 - 46
3SM1020A4T	♦INRI	146 - 47
3SM1020A5	INRI	146 - 53
3SM1020A5PL	♦INRI	146 - 54
3SM1020A5T	♦INRI	146 - 55
3SM1020A6	♦INRI	146 - 59
3SM1020A6PL	INRI	146 - 60
3SM1020A6T	♦INRI	146 - 61
3SM1020A7	INRI	146 - 65
3SM1020A7PL	♦INRI	146 - 66
3SM1020A7T	INRI	146 - 67
3SM1020A8	INRI	146 - 71
3SM1020A8PL	♦INRI	146 - 72
3SM1020A8T	♦INRI	146 - 73
3SM1020E4	INRI	146 - 48
3SM1020E4PL	♦INRI	146 - 49
3SM1020E4T	♦INRI	146 - 50
3SM1020E5	INRI	146 - 56
3SM1020E5PL	INRI	146 - 57
3SM1020E5T	♦INRI	146 - 58

TYPE No.	MFRS	Pg&Line
3SM1020E6	INRI	146 - 62
3SM1020E6PL	♦INRI	146 - 63
3SM1020E6T	INRI	146 - 64
3SM1020E7	INRI	146 - 68
3SM1020E7PL	INRI	146 - 69
3SM1020E7T	♦INRI	146 - 70
3SM1020GE8	INRI	146 - 74
3SM1020GE8PL	INRI	146 - 75
3SM1020GE8T	INRI	146 - 76
3SM1020GE9	INRI	146 - 79
3SM1020GE9T	♦INRI	146 - 80
3SM1020GE10	INRI	146 - 81
3SM1020GE10PL	INRI	146 - 82
3SM1020GE10T	INRI	146 - 83
4N22	♦MOTA	164 - 89
	♦MPI	OTK
	♦TII	
4N22A	♦MOTA	164 - 59
	♦MPI	♦TRWO
4N23	♦MOTA	164 - 93
	♦MPI	OTK
	♦TII	
4N23A	♦MOTA	164 - 60
	♦MPI	♦TRWO
4N24	♦MOTA	164 - 95
	♦MPI	OTK
	♦TII	
4N24A	♦MOTA	164 - 61
	♦MPI	♦TRWO
4N25	♦ALGG	165 - 39
	♦GESY	♦GIC
	♦MOTA	♦NECE
	OTK	PHIN
	♦SIEG	♦SIEX
	♦TII	TOSA
	♦TOSJ	♦TRWO
4N25A	♦GESY	165 - 40
	♦MOTA	OTK
	PHIN	TOSA
		♦TOSJ
4N26	♦ALGG	165 - 41
	♦GESY	♦GIC
	♦MOTA	OTK
	PHIN	♦SIEG
	♦SIEX	♦TII
	TOSA	♦TRWO
4N27	♦ALGG	165 - 36
	♦GESY	♦GIC
	♦MOTA	OTK
	PHIN	♦SIEG
	♦SIEX	♦TII
	TOSA	♦TRWO
4N28	♦ALGG	165 - 37
	♦GESY	♦GIC
	♦MOTA	OTK
	PHIN	♦SIEG
	♦SIEX	♦TII
	TOSA	♦TRWO
4N29	♦GESY	169 - 35
	♦GIC	♦MOTA
	OTK	TOSA
	TOSJ	♦TRWO
4N29A	♦GESY	169 - 36
	♦MOTA	OTK
	TOSA	TOSJ
4N30	♦GESY	169 - 12
	♦GIC	♦MOTA
	OTK	TOSA
		♦TRWO
4N31	♦GESY	169 - 11
	♦GIC	♦MOTA
	OTK	TOSA
		♦TRWO
4N32	♦ALGG	169 - 81
	♦GESY	♦GIC
	♦MOTA	OTK
	♦SIEG	♦SIEX
	TOSA	TOSJ
		♦TRWO
4N32A	♦GESY	169 - 40
	♦MOTA	OTK
	TOSA	TOSJ
4N33	♦ALGG	169 - 82
	♦GESY	♦GIC
	♦MOTA	OTK
	♦SIEG	♦SIEX
	TOSA	♦TRWO
4N35	♦ALGG	166 - 22
	♦GESY	♦GIC
	♦MOTA	MULB
	OTK	PHIN
	RTCF	♦SIEG
	♦SIEX	♦TII
	TOSA	TOSJ
	♦TRWO	VALG
4N36	♦ALGG	165 - 79
	♦GESY	♦GIC
	♦MOTA	MULB
	OTK	PHIN
	RTCF	♦SIEG
	♦SIEX	♦TII
	TOSA	♦TRWO
		VALG
4N37	♦ALGG	165 - 15
	♦GESY	♦GIC
	♦MOTA	MULB
	OTK	PHIN
	RTCF	♦SIEG
	♦SIEX	♦TII
	TOSA	♦TRWO
4N38	♦GESY	164 - 98
	♦MOTA	MULB
cont.next col.		

TYPE No.	MFRS	Pg&Line
4N38		
(cont.)	OTK	
PHIN	RTCF	
TOSA	♦TRWO	
	VALG	
4N38A	♦GESY	165 - 58
♦MOTA	MULB	
OTK	PHIN	
RTCF	TOSA	
♦TRWO	VALG	
4N39	♦GESY	171 - 39
♦MOTA	OTK	
4N40	♦GESY	171 - 44
♦MOTA	OTK	
4N41	♦TOI	176 - 91
4N45	♦HPA	173 - 81
4N46	♦HPA	173 - 82
4N47	♦MPI	164 - 83
	♦TII	
4N48	♦MPI	164 - 84
	♦TII	
4N49	♦MPI	164 - 85
	♦TII	
4N50	♦TCY	164 - 99
	TSS	
4N51	♦HPA	202 - 76
4N52	♦HPA	202 - 77
4N53	♦HPA	202 - 75
4N54	♦HPA	202 - 78
4N55	♦HPA	165 - 22
	♦MPI	
4N55TXV	♦HPA	165 - 23
4N55TXVB	♦HPA	164 - 34
4RAG3011XXX	♦LWE	91 - 46
4RAG3012XXX	♦LWE	92 - 1
4RAR3005XXX	♦LWE	91 - 61
4RAR3009XXX	♦LWE	91 - 66
4RAR3010XXX	♦LWE	91 - 62
4RAY3013XXX	♦LWE	91 - 87
4RAY3014XXX	♦LWE	91 - 88
4X11	UCE	223 - 41
5RAG3011XXX	♦LWE	92 - 79
5RAG3012XXX	♦LWE	92 - 80
5RAR3005XXX	♦LWE	92 - 34
5RAR3009XXX	♦LWE	92 - 36
5RAR3010XXX	♦LWE	92 - 35
5RAY3013XXX	♦LWE	92 - 55
5RAY3014XXX	♦LWE	92 - 56
5SM1020A4	♦INRI	146 - 88
5SM1020A4PL	INRI	146 - 89
5SM1020A4T	♦INRI	146 - 90
5SM1020A5	♦INRI	146 - 96
5SM1020A5PL	♦INRI	146 - 97
5SM1020A5T	INRI	146 - 98
5SM1020A6	♦INRI	146 -102
5SM1020A6PL	♦INRI	146 -103
5SM1020A6T	♦INRI	146 -104
5SM1020A7	♦INRI	146 -108
5SM1020A7PL	♦INRI	146 -109
5SM1020A7T	♦INRI	146 -110
5SM1020A8	♦INRI	147 - 4
5SM1020A8PL	♦INRI	147 - 5
5SM1020A8T	INRI	147 - 6
5SM1020E4	♦INRI	146 - 91
5SM1020E4PL	♦INRI	146 - 92
5SM1020E4T	INRI	146 - 93
5SM1020E5	♦INRI	146 - 99
5SM1020E5PL	♦INRI	146 -100
5SM1020E5T	♦INRI	146 -101
5SM1020E6	♦INRI	146 -105
5SM1020E6PL	INRI	146 -106
5SM1020E6T	♦INRI	146 -107
5SM1020E7	♦INRI	147 - 1
5SM1020E7PL	INRI	147 - 2
5SM1020E7T	INRI	147 - 3
5SM1020GE8	♦INRI	147 - 7
5SM1020GE8PL	♦INRI	147 - 8
5SM1020GE8T	INRI	147 - 9
5SM1020GE9	INRI	147 - 12
5SM1020GE9PL	♦INRI	147 - 13
5SM1020GE9T	INRI	147 - 14
5SM1020GE10	♦INRI	147 - 15
5SM1020GE10PL	INRI	147 - 16
5SM1020GE10T	♦INRI	147 - 17
5.346	♦UCE	222 - 44
6N134	♦HPA	173 - 29
6N135	♦HPA	173 -105
♦TII	TOSJ	
	♦TRWO	
6N136	♦HPA	173 -106
♦NECE	RSCB	
♦TII	TOSA	
TOSJ	♦TRWO	
6N137	GIC	173 - 30
♦HPA	♦NECE	
RSCB	♦TII	
TOSA	TOSJ	
	♦TRWO	
6N138	♦GIC	173 -100
♦HPA	RSCB	
♦SIEG	♦SIEX	
TOSA	♦TRWO	
6N139	♦GIC	173 -101
♦HPA	RSCB	
♦SIEG	♦SIEX	
TOSA	♦TRWO	
6N140	♦HPA	164 - 36
	♦MPI	
6RAG3011XXX	♦LWE	92 -100
6RAG3012XXX	♦LWE	92 -103
6RAR3005XXX	♦LWE	92 - 85
6RAR3009XXX	♦LWE	92 - 89
6RAR3010XXX	♦LWE	92 - 86
6RAY3013XXX	♦LWE	92 - 93

TYPE No.	MFRS	Pg&Line
6RAY3014XXX	♦LWE	92 - 95
7RAG3011XXX	♦LWE	93 - 12
7RAG3012XXX	♦LWE	93 - 13
7RAR3005XXX	♦LWE	92 -108
7RAR3009XXX	♦LWE	92 -110
7RAR3010XXX	♦LWE	92 -109
7RAY3013XXX	♦LWE	93 - 5
7RAY3014XXX	♦LWE	93 - 6
8RAG3011XXX	♦LWE	93 - 26
8RAG3012XXX	♦LWE	93 - 27
8RAR3005XXX	♦LWE	93 - 17
8RAR3009XXX	♦LWE	93 - 19
8RAR3010XXX	♦LWE	93 - 18
8RAY3013XXX	♦LWE	93 - 22
8RAY3014XXX	♦LWE	93 - 23
9RAG3011XXX	♦LWE	93 - 44
9RAG3012XXX	♦LWE	93 - 45
9RAR3005XXX	♦LWE	93 - 32
9RAR3009XXX	♦LWE	93 - 34
9RAR3010XXX	♦LWE	93 - 33
9RAY3013XXX	♦LWE	93 - 40
9RAY3014XXX	♦LWE	93 - 41
010PIN-TO5	♦QTC	104 - 85
010PV-TO5	♦QTC	108 - 45
010UV-PV-TO5	QTC	105 - 37
10RAG3011XXX	♦LWE	94 - 22
10RAG3012XXX	♦LWE	94 - 23
10RAR3005XXX	♦LWE	93 - 81
10RAR3009XXX	♦LWE	93 - 83
10RAR3010XXX	♦LWE	93 - 82
10RAY3013XXX	♦LWE	93 -110
10RAY3014XXX	♦LWE	94 - 1
11PD18M	ASE	108 - 33
11PD18P	♦ASE	108 -107
11PH18M	♦ASE	108 - 32
11PS18M	♦ASE	107 - 3
11RAG3011XXX	♦LWE	94 - 30
11RAG3012XXX	♦LWE	94 - 31
11RAR3005XXX	♦LWE	94 - 25
11RAR3009XXX	♦LWE	94 - 27
11RAR3010XXX	♦LWE	94 - 26
11RAY3013XXX	♦LWE	94 - 28
11RAY3014XXX	♦LWE	94 - 29
12RAG3011XXX	♦LWE	94 - 59
12RAG3012XXX	♦LWE	94 - 60
12RAR3005XXX	♦LWE	94 - 41
12RAR3009XXX	♦LWE	94 - 43
12RAR3010XXX	♦LWE	94 - 42
12RAY3013XXX	♦LWE	94 - 50
12RAY3014XXX	♦LWE	94 - 51
13RAG3011XXX	♦LWE	94 - 66
13RAG3012XXX	♦LWE	94 - 67
13RAR3005XXX	♦LWE	94 - 61
13RAR3009XXX	♦LWE	94 - 63
13RAR3010XXX	♦LWE	94 - 62
13RAY3013XXX	♦LWE	94 - 64
13RAY3014XXX	♦LWE	94 - 65
14RAG3011XXX	♦LWE	94 - 73
14RAG3012XXX	♦LWE	94 - 74
14RAR3005XXX	♦LWE	94 - 68
14RAR3009XXX	♦LWE	94 - 70
14RAR3010XXX	♦LWE	94 - 69
14RAY3013XXX	♦LWE	94 - 71
14RAY3014XXX	♦LWE	94 - 72
15-15	REC	224 -108
15RAG3011XXX	♦LWE	94 - 81
15RAG3012XXX	♦LWE	94 - 82
15RAR3005XXX	♦LWE	94 - 76
15RAR3009XXX	♦LWE	94 - 78
15RAR3010XXX	♦LWE	94 - 77
15RAY3013XXX	♦LWE	94 - 79
15RAY3014XXX	♦LWE	94 - 80
16RAG3011XXX	♦LWE	94 - 88
16RAG3012XXX	♦LWE	94 - 89
16RAR3005XXX	♦LWE	94 - 83
16RAR3009XXX	♦LWE	94 - 85
16RAR3010XXX	♦LWE	94 - 84
16RAY3013XXX	♦LWE	94 - 86
16RAY3014XXX	♦LWE	94 - 87
17RAG3011XXX	♦LWE	94 - 95
17RAG3012XXX	♦LWE	94 - 96
17RAR3005XXX	♦LWE	94 - 90
17RAR3009XXX	♦LWE	94 - 92
17RAR3010XXX	♦LWE	94 - 91
17RAY3013XXX	♦LWE	94 - 93
17RAY3014XXX	♦LWE	94 - 94
18RAG3011XXX	♦LWE	94 -104
18RAG3012XXX	♦LWE	94 -105
18RAR3005XXX	♦LWE	94 - 97
18RAR3009XXX	♦LWE	94 - 99
18RAR3010XXX	♦LWE	94 - 98
18RAY3013XXX	♦LWE	94 -102
18RAY3014XXX	♦LWE	94 -103
19RAG3011XXX	♦LWE	94 -109
19RAG3012XXX	♦LWE	94 -110
19RAR3005XXX	♦LWE	94 -106
19RAR3009XXX	♦LWE	94 -108
19RAR3010XXX	♦LWE	94 -107
21RAG3011XXX	♦LWE	95 - 8
21RAG3012XXX	♦LWE	95 - 9
21RAR3005XXX	♦LWE	95 - 3
21RAR3009XXX	♦LWE	95 - 5
21RAR3010XXX	♦LWE	95 - 4
21RAY3013XXX	♦LWE	95 - 6
21RAY3014XXX	♦LWE	95 - 7
22BH18M	ASE	108 - 38
22BH18P	ASE	108 -108
22PB18M	ASE	108 - 30
22PD18M	ASE	108 - 40
22PD18P	♦ASE	109 - 1
22PH18M	♦ASE	108 - 39
22PS18M	♦ASE	107 - 10
22RAG3011XXX	♦LWE	95 - 15
22RAG3012XXX	♦LWE	95 - 16

TYPE No.	MFRS	Pg&Line
22RAR3005XXX	♦LWE	95 - 10
22RAR3009XXX	♦LWE	95 - 12
22RAR3010XXX	♦LWE	95 - 11
22RAY3013XXX	♦LWE	95 - 13
22RAY3014XXX	♦LWE	95 - 14
25PDU5M	♦ASE	128 - 13
28D5R24H	♦LXD	214 - 64
28E3R24GH	♦LXD	214 - 65
28E5R24H	♦LXD	214 - 66
28E9R24GH	♦LXD	214 - 67
28R3R24GH	♦LXD	214 - 68
28R9R24GH	♦LXD	214 - 69
29D5R19H	♦LXD	210 - 68
29E3R19GH	♦LXD	210 - 69
29E5R19H	♦LXD	210 - 70
29E9R19GH	♦LXD	210 - 71
29R3R19GH	♦LXD	210 - 72
29R9R19GH	♦LXD	210 - 73
30-30	REC	224 -109
30D5R99H	♦LXD	207 - 86
30E3R99GH	♦LXD	207 - 87
30E5R99H	♦LXD	207 - 88
30E9R99GH	♦LXD	207 - 89
30R3R99GH	♦LXD	207 - 90
30R9R99GH	♦LXD	207 - 91
30X5PV-CM	QTC	108 - 59
30X10PV-CM	QTC	108 - 65
33BH05M	ASE	108 - 41
33BH05P	ASE	109 - 2
33D5R02H	♦LXD	207 -102
33E3R02GH	♦LXD	207 -103
33E5R02H	♦LXD	207 -104
33E9R02GH	♦LXD	208 - 1
33PB05M	ASE	108 - 34
33PD05M	ASE	108 - 44
33PD05P	♦ASE	109 - 3
33PH05M	♦ASE	108 - 42
33PS05M	♦ASE	107 - 16
33R3R02GH	♦LXD	208 - 2
33R9R02GH	♦LXD	208 - 3
34D5R02H	♦LXD	208 - 13
34E3R02GH	♦LXD	208 - 14
34E5R02H	♦LXD	208 - 15
34E9R02GH	♦LXD	208 - 16
34R3R02GH	♦LXD	208 - 17
34R9R02GH	♦LXD	208 - 18
35D5R02H	♦LXD	207 - 1
35E3R02GH	♦LXD	207 - 2
35E5R02H	♦LXD	207 - 3
35E9R02GH	♦LXD	207 - 4
35R3R02GH	♦LXD	207 - 5
35R9R02GH	♦LXD	207 - 6
36D5R37H	♦LXD	208 - 31
36E3R37GH	♦LXD	208 - 32
36E5R37H	♦LXD	208 - 33
36E9R37GH	♦LXD	208 - 34
36R3R37GH	♦LXD	208 - 35
36R9R37GH	♦LXD	208 - 36
38D3R02H	♦LXD	207 - 7
38D8R02H	♦LXD	207 - 8
38E3R02GH	♦LXD	207 - 9
38E3R02H	♦LXD	207 - 10
38E8R02H	♦LXD	207 - 11
38R3R02GH	♦LXD	207 - 12
41D5R03H	♦LXD	210 - 94
41E3R03GH	♦LXD	210 - 95
41E5R03H	♦LXD	210 - 96
41E9R03GH	♦LXD	210 - 97
41R3R03GH	♦LXD	210 - 98
41R9R03GH	♦LXD	210 - 99
43D5R03H	♦LXD	210 -100
43E3R03GH	♦LXD	210 -101
43E5R03H	♦LXD	210 -102
43E9R03GH	♦LXD	210 -103
43R3R03GH	♦LXD	211 - 1
43R9R03GH	♦LXD	211 - 2
44BH05M	ASE	108 - 48
44BH05P	ASE	109 - 4
44D5R03H	♦LXD	212 - 88
44E3R03GH	♦LXD	212 - 89
44E5R03H	♦LXD	212 - 90
44E9R03GH	♦LXD	212 - 91
44PB05M	ASE	108 - 46
44PBF7C	♦ASE	110 - 20
44PD05M	ASE	108 - 51
44PD05P	♦ASE	109 - 6
44PH05M	♦ASE	108 - 49
44PH05P	ASE	109 - 5
44PS05M	♦ASE	107 - 29
44R3R03GH	♦LXD	212 - 92
44R9R03GH	♦LXD	212 - 93
45D5R03H	♦LXD	209 - 77
45E3R03GH	♦LXD	209 - 78
45E5R03H	♦LXD	209 - 79
45E9R03GH	♦LXD	209 - 80
45PQU5M	ASE	128 - 32
45R3R03GH	♦LXD	209 - 81
45R9R03GH	♦LXD	209 - 82
45X11PV-CM	QTC	108 - 67
47D5R03H	♦LXD	210 - 26
47D5T03	♦LXD	209 -110
47E3R03GH	♦LXD	210 - 27
47E5R03H	♦LXD	210 - 28
47E9R03GH	♦LXD	210 - 29
47R3R03GH	♦LXD	210 - 30
47R9R03GH	♦LXD	210 - 31
49D5R03H	♦LXD	209 - 83
49E3R03GH	♦LXD	209 - 84
49E5R03H	♦LXD	209 - 85
49E9R03GH	♦LXD	209 - 86
49R3R03GH	♦LXD	209 - 87
49R9R03GH	♦LXD	209 - 88
050PIN-RM	♦QTC	104 - 86
050PIN-TO8	QTC	105 - 39

△-Registered with JEDEC by this manufacturer

♦-Mfr's data sheet available in microfilm service

1. TYPE No. CROSS INDEX

IN TYPE NUMBER SEQUENCE

TYPE No.	MFRS	Pg&Line
050PV-RM	♦QTC	108 - 54
51D5R08H	♦LXD	214 - 76
51E3R08GH	♦LXD	214 - 77
51E3T08	♦LXD	215 - 82
51E5F08	♦LXD	215 - 83
51E5R08	♦LXD	215 - 84
51E5R08H	♦LXD	214 - 78
51E5T08	♦LXD	215 - 85
51E9F08	♦LXD	215 - 86
51E9R08	♦LXD	215 - 87
51E9R08GH	♦LXD	214 - 79
51E9T08	♦LXD	215 - 88
51P	♦ASE	138 - 79
51PB	♦ASE	138 - 80
51PBH	♦ASE	138 - 81
51PBHL	ASE	138 - 82
51PBL	ASE	138 - 83
51PL	ASE	138 - 84
51R3R08GH	♦LXD	214 - 80
51R9R08GH	♦LXD	214 - 81
52P	♦ASE	138 - 87
52PB	♦ASE	138 - 88
52PBH	♦ASE	138 - 89
52PBHL	ASE	138 - 90
52PBL	ASE	138 - 91
52PL	ASE	138 - 92
53D3F08	♦LXD	215 - 89
53D3R08	♦LXD	215 - 90
53D3T08	♦LXD	215 - 91
53D5F08	♦LXD	215 - 92
53D5R08	♦LXD	215 - 93
53D5R08H	♦LXD	214 - 82
53D5T08	♦LXD	215 - 94
53E3R08GH	♦LXD	214 - 83
53E5R08H	♦LXD	214 - 84
53E9R08GH	♦LXD	214 - 85
53R3R08GH	♦LXD	214 - 86
53R9R08GH	♦LXD	214 - 87
54D5R08H	♦LXD	216 - 3
54E3R08GH	♦LXD	216 - 4
54E5R08H	♦LXD	216 - 5
54E9R08GH	♦LXD	216 - 6
54R3R08GH	♦LXD	216 - 7
54R9R08GH	♦LXD	216 - 8
55D5R08H	♦LXD	214 - 45
55E3R08GH	♦LXD	214 - 46
55E5R08H	♦LXD	214 - 47
55E9R08GH	♦LXD	214 - 48
55P	♦ASE	138 - 66
55PBH	♦ASE	138 - 67
55PBHL	ASE	138 - 68
55PBL	ASE	138 - 69
55PL	ASE	138 - 70
55R3R08GH	♦LXD	214 - 49
55R9R08GH	♦LXD	214 - 50
57D5R21H	♦LXD	216 - 95
57D9F21	♦LXD	216 - 78
57D9R21	♦LXD	216 - 79
57D9R21GH	LXD	216 - 90
57D9T21	♦LXD	216 - 80
57E3R21GH	♦LXD	216 - 96
57E5R21H	♦LXD	216 - 97
57E9R21GH	♦LXD	216 - 98
57R3R21GH	♦LXD	216 - 99
57R9R21GH	♦LXD	216 -100
58D5R79H	♦LXD	214 - 92
58E3R79GH	♦LXD	214 - 93
58E5R79H	♦LXD	214 - 94
58E9R79GH	♦LXD	214 - 95
58P	♦ASE	138 - 51
58PB	♦ASE	138 - 52
58PBH	♦ASE	138 - 53
58PBHL	ASE	138 - 54
58PBL	ASE	138 - 55
58PL	ASE	138 - 56
58R3R79GH	♦LXD	214 - 96
58R9R79GH	♦LXD	214 - 97
59-5737	IRI	113 - 11
60-20	REC	224 -110
60-1045	ASE	144 - 57
60-1046	ASE	144 - 56
60-1069	ASE	144 - 60
60-3012	ASE	144 - 96
60-3013	ASE	144 - 91
60-3014	ASE	144 - 90
60-3015	ASE	144 - 99
60-3016	ASE	144 -100
60-3039-4	ASE	144 - 87
60-3039-6	ASE	144 - 92
60-3039-12	ASE	144 -101
60-3040-12	ASE	144 - 97
60-3040-24	ASE	144 -105
60-3053-12	ASE	144 - 98
60-3053-24	ASE	144 -106
60D5R05H	♦LXD	213 - 28
60E3R05GH	♦LXD	213 - 29
60E5R05H	♦LXD	213 - 30
60E9R05GH	♦LXD	213 - 31
60R3R05GH	♦LXD	213 - 32
60R9R05GH	♦LXD	213 - 33
61SV	MULB	113 - 21
PHIN	RTCF	
	VALG	
62SV	MULB	112 - 56
PHIN	VALG	
65D5R09H	♦LXD	213 - 83
65E3R09GH	♦LXD	213 - 84
65E5R09H	♦LXD	213 - 85
65E9R09GH	♦LXD	213 - 86
65R3R09GH	♦LXD	213 - 87
65R9R09GH	♦LXD	213 - 88
66D3R09H	♦LXD	210 - 32
66D8R09H	♦LXD	210 - 33
66E3R09GH	♦LXD	210 - 34

TYPE No.	MFRS	Pg&Line
66E3R09H	♦LXD	210 - 35
66E8R09H	♦LXD	210 - 36
66R3R09GH	♦LXD	210 - 37
68PB08M	ASE	108 - 50
68PBF9C	♦ASE	110 - 21
68PD08M	ASE	107 - 28
68PH08M	♦ASE	108 - 55
68PS08M	♦ASE	107 - 30
69D3R09H	♦LXD	213 - 77
69D8R09H	♦LXD	213 - 78
69E3R09GH	♦LXD	213 - 79
69E3R09H	♦LXD	213 - 80
69E8R09H	♦LXD	213 - 81
69R3R09GH	♦LXD	213 - 82
70D5F10	♦LXD	217 - 45
70D5R10H	♦LXD	217 - 56
70E3R10GH	♦LXD	217 - 57
70E5R10H	♦LXD	217 - 58
70E9R10GH	♦LXD	217 - 59
70R3R10GH	♦LXD	217 - 60
70R9R10GH	♦LXD	217 - 61
76D3R09H	♦LXD	220 - 14
76D8R09H	♦LXD	220 - 15
76E3R09GH	♦LXD	220 - 16
76E3R09H	♦LXD	220 - 17
76E8R09H	♦LXD	220 - 18
76R3R09GH	♦LXD	220 - 19
77D3R10H	♦LXD	220 - 29
77D8R10H	♦LXD	220 - 30
77E3R10GH	♦LXD	220 - 31
77E3R10H	♦LXD	220 - 32
77E8R10H	♦LXD	220 - 33
77R3R10GH	♦LXD	220 - 34
78D5F10	♦LXD	220 - 35
78D5R10H	♦LXD	220 - 36
78E3R10GH	♦LXD	220 - 37
78E5R10H	♦LXD	220 - 38
78E9R10GH	♦LXD	220 - 39
78R3R10GH	♦LXD	220 - 40
78R9R10GH	♦LXD	220 - 41
80B5R	♦NECJ	230 - 2
83D5R11H	♦LXD	218 - 61
83E3R11GH	♦LXD	218 - 62
83E5R11H	♦LXD	218 - 63
83E9R11GH	♦LXD	218 - 64
83R3R11GH	♦LXD	218 - 65
83R9R11GH	♦LXD	218 - 66
84D5R11H	♦LXD	219 - 11
84E3R11GH	♦LXD	219 - 12
84E5R11H	♦LXD	219 - 13
84E9R11GH	♦LXD	219 - 14
84R3R11GH	♦LXD	219 - 15
84R9R11GH	♦LXD	219 - 16
85D5R11H	♦LXD	218 - 49
85E3R11GH	♦LXD	218 - 50
85E5R11H	♦LXD	218 - 51
85E9R11GH	♦LXD	218 - 52
85R3R11GH	♦LXD	218 - 53
85R9R11GH	♦LXD	218 - 54
87D5R84H	♦LXD	219 - 21
87E3R84GH	♦LXD	219 - 22
87E5R84H	♦LXD	219 - 23
87E9R84GH	♦LXD	219 - 24
87R3R84GH	♦LXD	219 - 25
87R9R84GH	♦LXD	219 - 26
90D5R99H	♦LXD	219 - 44
90E3R99GH	♦LXD	219 - 45
90E5R99H	♦LXD	219 - 46
90E9R99GH	♦LXD	219 - 47
90R3R99GH	♦LXD	219 - 48
90R9R99GH	♦LXD	219 - 49
91D5R11H	♦LXD	222 - 83
91E3R11GH	♦LXD	222 - 84
91E5R11H	♦LXD	222 - 85
91E9R11GH	♦LXD	222 - 86
91R3R11GH	♦LXD	222 - 87
91R9R11GH	♦LXD	222 - 88
93D3R31H	♦LXD	221 - 24
93D8R31H	♦LXD	221 - 25
93E3R31GH	♦LXD	221 - 26
93E3R31H	♦LXD	221 - 27
93E8R31H	♦LXD	221 - 28
93R3R31GH	♦LXD	221 - 29
94D3R32H	♦LXD	221 - 30
94D8R32H	♦LXD	221 - 31
94E3R32GH	♦LXD	221 - 32
94E3R32H	♦LXD	221 - 33
94E8R32H	♦LXD	221 - 34
94R3R32GH	♦LXD	221 - 35
96E3R33GH	♦LXD	221 - 49
96E3R33H	♦LXD	221 - 50
96E8R33H	♦LXD	221 - 51
99D3R99H	♦LXD	221 - 43
99D8R99H	♦LXD	221 - 44
99E3R99GH	♦LXD	221 - 45
99E3R99H	♦LXD	221 - 46
99E8R99H	♦LXD	221 - 47
99R3R99GH	♦LXD	221 - 48
100PIN-BNC	♦QTC	104 - 87
100PIN-PP	♦QTC	104 - 88
100PIN-RM	♦QTC	104 - 89
100PV-BNC	♦QTC	108 - 56
100PV-PP	♦QTC	108 - 57
100PV-RM	♦QTC	108 - 58
100Q-PIN-RM	QTC	232 - 52
100UV-PV-RM	QTC	105 - 40
101B01AA	♦EEVB	214 -101
101B01AB	♦EEVB	214 -102
101B01AC	♦EEVB	214 -103
101B01AD	♦EEVB	214 -104
101B01BF	♦EEVB	214 -105
101B01BG	♦EEVB	214 -106
101B01BH	♦EEVB	214 -107
101B01BK	♦EEVB	214 -108

TYPE No.	MFRS	Pg&Line
101B1-11	EEVB	212 - 73
101B1-12	EEVB	212 - 74
101B1-13	EEVB	212 - 75
101B1-14	EEVB	212 - 76
101B1-26	EEVB	212 - 77
101B1-27	EEVB	212 - 78
101B1-31	EEVB	212 - 79
101B1-32	EEVB	212 - 80
101B1-41	EEVB	212 - 81
101B1-42	EEVB	212 - 82
101B1-51	EEVB	212 - 83
101B1-52	EEVB	212 - 84
101B03AA	♦EEVB	214 -109
101B03AB	♦EEVB	214 -110
101B03AC	♦EEVB	215 - 1
101B03AD	♦EEVB	215 - 2
101B03BF	♦EEVB	215 - 3
101B03BG	♦EEVB	215 - 4
101B03BH	♦EEVB	215 - 5
101B03BK	♦EEVB	215 - 6
101B3-52	EEVB	212 - 86
101F01AA	♦EEVB	215 - 7
101F01AB	♦EEVB	215 - 8
101F01AC	♦EEVB	215 - 9
101F01AD	♦EEVB	215 - 10
101F01BF	♦EEVB	215 - 11
101F01BG	♦EEVB	215 - 12
101F01BH	♦EEVB	215 - 13
101F01BK	♦EEVB	215 - 14
101F03AA	♦EEVB	215 - 15
101F03AB	♦EEVB	215 - 16
101F03AC	♦EEVB	215 - 17
101F03AD	♦EEVB	215 - 18
101F03BF	♦EEVB	215 - 19
101F03BG	♦EEVB	215 - 20
101F03BH	♦EEVB	215 - 21
101F03BK	♦EEVB	215 - 22
101F3-52	EEVB	212 - 85
102F01AA	♦EEVB	215 - 23
102F01AB	♦EEVB	215 - 24
102F01AC	♦EEVB	215 - 25
102F01AD	♦EEVB	215 - 26
102F01BF	♦EEVB	215 - 27
102F01BG	♦EEVB	215 - 28
102F01BH	♦EEVB	215 - 29
102F01BK	♦EEVB	215 - 30
102F03AA	♦EEVB	215 - 31
102F03AB	♦EEVB	215 - 32
102F03AC	♦EEVB	215 - 33
102F03AD	♦EEVB	215 - 34
102F03BF	♦EEVB	215 - 35
102F03BG	♦EEVB	215 - 36
102F03BH	♦EEVB	215 - 37
102F03BK	♦EEVB	215 - 38
103B01AA	♦EEVB	216 - 44
103B01AB	♦EEVB	216 - 45
103B01AC	♦EEVB	216 - 46
103B01AD	♦EEVB	216 - 47
103B01BF	♦EEVB	216 - 48
103B01BG	♦EEVB	216 - 49
103B01BH	♦EEVB	216 - 50
103B01BK	♦EEVB	216 - 51
103B03	♦EEVB	209 -103
103B03AA	♦EEVB	216 - 52
103B03AB	♦EEVB	216 - 53
103B03AC	♦EEVB	216 - 54
103B03AD	♦EEVB	216 - 55
103B03BF	♦EEVB	216 - 56
103B03BG	♦EEVB	216 - 57
103B03BH	♦EEVB	216 - 58
103B03BK	♦EEVB	216 - 59
103B3-11	EEVB	210 - 14
103B3-12	EEVB	210 - 15
103B3-13	EEVB	210 - 16
103B3-14	EEVB	210 - 17
103B3-26	EEVB	210 - 18
103B3-27	EEVB	210 - 19
103B3-31	EEVB	210 - 20
103B3-32	EEVB	210 - 21
103B3-41	EEVB	210 - 22
103B3-42	EEVB	210 - 23
103B3-51	EEVB	210 - 24
103B3-52	EEVB	210 - 25
103F01AA	♦EEVB	216 - 60
103F01AB	♦EEVB	216 - 61
103F01AC	♦EEVB	216 - 62
103F01AD	♦EEVB	216 - 63
103F01BF	♦EEVB	216 - 64
103F01BG	♦EEVB	216 - 65
103F01BH	♦EEVB	216 - 66
103F01BK	♦EEVB	216 - 67
103F03AA	♦EEVB	216 - 68
103F03AB	♦EEVB	216 - 69
103F03AC	♦EEVB	216 - 70
103F03AD	♦EEVB	216 - 71
103F03BF	♦EEVB	216 - 72
103F03BG	♦EEVB	216 - 73
103F03BH	♦EEVB	216 - 74
103F03BK	♦EEVB	216 - 75
104B01AA	♦EEVB	217 - 5
104B01AB	♦EEVB	217 - 6
104B01AC	♦EEVB	217 - 7
104B01AD	♦EEVB	217 - 8
104B01BF	♦EEVB	217 - 9
104B01BG	♦EEVB	217 - 10
104B01BH	♦EEVB	217 - 11
104B01BK	♦EEVB	217 - 12
104B03AA	♦EEVB	217 - 13
104B03AB	♦EEVB	217 - 14
104B03AC	♦EEVB	217 - 15
104B03AD	♦EEVB	217 - 16
104B03BF	♦EEVB	217 - 17
104B03BG	♦EEVB	217 - 18
104B03BH	♦EEVB	217 - 19

TYPE No.	MFRS	Pg&Line
104B03BK	♦EEVB	217 - 20
104F01AA	♦EEVB	217 - 21
104F01AB	♦EEVB	217 - 22
104F01AC	♦EEVB	217 - 23
104F01AD	♦EEVB	217 - 24
104F01BF	♦EEVB	217 - 25
104F01BG	♦EEVB	217 - 26
104F01BH	♦EEVB	217 - 27
104F01BK	♦EEVB	217 - 28
104F03AA	♦EEVB	217 - 29
104F03AB	♦EEVB	217 - 30
104F03AC	♦EEVB	217 - 31
104F03AD	♦EEVB	217 - 32
104F03BF	♦EEVB	217 - 33
104F03BG	♦EEVB	217 - 34
104F03BH	♦EEVB	217 - 35
104F03BK	♦EEVB	217 - 36
107-1	HEI	117 - 28
107-2	HEI	121 - 83
107-3	HEI	122 - 25
107-4	HEI	125 - 48
107F07AA	♦EEVB	219 -104
107F07AB	♦EEVB	219 -105
107F07AC	♦EEVB	219 -106
107F07AD	♦EEVB	220 - 1
108-3	HEI	115 - 59
108-4	HEI	115 -106
108B01AA	♦EEVB	215 - 39
108B01AB	♦EEVB	215 - 40
108B01AC	♦EEVB	215 - 41
108B01AD	♦EEVB	215 - 42
108B01BF	♦EEVB	215 - 43
108B01BG	♦EEVB	215 - 44
108B01BH	♦EEVB	215 - 45
108B01BK	♦EEVB	215 - 46
108B03AA	♦EEVB	215 - 47
108B03AB	♦EEVB	215 - 48
108B03AC	♦EEVB	215 - 49
108B03AD	♦EEVB	215 - 50
108B03BF	♦EEVB	215 - 51
108B03BG	♦EEVB	215 - 52
108B03BH	♦EEVB	215 - 53
108B03BK	♦EEVB	215 - 54
108F01AA	♦EEVB	215 - 55
108F01AB	♦EEVB	215 - 56
108F01AC	♦EEVB	215 - 57
108F01AD	♦EEVB	215 - 58
108F01BF	♦EEVB	215 - 59
108F01BG	♦EEVB	215 - 60
108F01BH	♦EEVB	215 - 61
108F01BK	♦EEVB	215 - 62
108F03AA	♦EEVB	215 - 63
108F03AB	♦EEVB	215 - 64
108F03AC	♦EEVB	215 - 65
108F03AD	♦EEVB	215 - 66
108F03BF	♦EEVB	215 - 67
108F03BG	♦EEVB	215 - 68
108F03BH	♦EEVB	215 - 69
108F03BK	♦EEVB	215 - 70
109F07AA	♦EEVB	214 - 30
109F07AB	♦EEVB	214 - 31
109F07AC	♦EEVB	214 - 32
109F07AD	♦EEVB	214 - 33
110P	♦ASE	138 - 96
110PB9M	ASE	109 - 46
110PB	♦ASE	138 - 97
110PBF9	♦ASE	110 - 22
110PBH	♦ASE	138 - 98
110PBHL	ASE	137 - 90
110PBL	ASE	138 - 99
110PBM	ASE	108 - 53
110PD9M	ASE	108 - 64
110PH9M	♦ASE	108 - 60
110PL	ASE	138 -100
110PS9M	♦ASE	107 - 31
111F01AA	♦EEVB	218 - 73
111F01AB	♦EEVB	218 - 74
111F01AC	♦EEVB	218 - 75
111F01AD	♦EEVB	218 - 76
111F01BF	♦EEVB	218 - 77
111F01BG	♦EEVB	218 - 78
111F01BH	♦EEVB	218 - 79
111F01BK	♦EEVB	218 - 80
111F03AA	♦EEVB	218 - 81
111F03AB	♦EEVB	218 - 82
111F03AC	♦EEVB	218 - 83
111F03AD	♦EEVB	218 - 84
111F03BF	♦EEVB	218 - 85
111F03BG	♦EEVB	218 - 86
111F03BH	♦EEVB	218 - 87
111F03BK	♦EEVB	218 - 88
112-3	HEI	158 - 60
112F01AA	♦EEVB	219 - 27
112F01AB	♦EEVB	219 - 28
112F01AC	♦EEVB	219 - 29
112F01AD	♦EEVB	219 - 30
112F01BF	♦EEVB	219 - 31
112F01BG	♦EEVB	219 - 32
112F01BH	♦EEVB	219 - 33
112F01BK	♦EEVB	219 - 34
112F03AA	♦EEVB	219 - 35
112F03AB	♦EEVB	219 - 36
112F03AC	♦EEVB	219 - 37
112F03AD	♦EEVB	219 - 38
112F03BF	♦EEVB	219 - 39
112F03BG	♦EEVB	219 - 40
112F03BH	♦EEVB	219 - 41
112F03BK	♦EEVB	219 - 42
114M	♦EEVB	220 - 64
115M	♦EEVB	220 - 65
116F01AA	♦EEVB	218 - 89
116F01AB	♦EEVB	218 - 90
116F01AC	♦EEVB	218 - 91
116F01AD	♦EEVB	218 - 92

TYPE No.	MFRS	Pg&Line
116F01BF	♦EEVB	218 - 93
116F01BG	♦EEVB	218 - 94
116F01BH	♦EEVB	218 - 95
116F01BK	♦EEVB	218 - 96
116F03AA	♦EEVB	218 - 97
116F03AB	♦EEVB	218 - 98
116F03AC	♦EEVB	218 - 99
116F03AD	♦EEVB	218 -100
116F03BF	♦EEVB	218 -101
116F03BG	♦EEVB	218 -102
116F03BH	♦EEVB	218 -103
116F03BK	♦EEVB	218 -104
117F01AA	♦EEVB	221 - 75
117F01AB	♦EEVB	221 - 76
117F01AC	♦EEVB	221 - 77
117F01AD	♦EEVB	221 - 78
117F01BF	♦EEVB	221 - 79
117F01BG	♦EEVB	221 - 80
117F01BH	♦EEVB	221 - 81
117F01BK	♦EEVB	221 - 82
117F03AA	♦EEVB	221 - 83
117F03AB	♦EEVB	221 - 84
117F03AC	♦EEVB	221 - 85
117F03AD	♦EEVB	221 - 86
117F03BF	♦EEVB	221 - 87
117F03BG	♦EEVB	221 - 88
117F03BH	♦EEVB	221 - 89
117F03BK	♦EEVB	221 - 90
117M	♦EEVB	221 - 74
118B01AA	♦EEVB	217 - 79
118B01AB	♦EEVB	217 - 80
118B01AC	♦EEVB	217 - 81
118B01AD	♦EEVB	217 - 82
118B01BF	♦EEVB	217 - 83
118B01BG	♦EEVB	217 - 84
118B01BH	♦EEVB	217 - 85
118B01BK	♦EEVB	217 - 86
118B03AA	♦EEVB	217 - 87
118B03AB	♦EEVB	217 - 88
118B03AC	♦EEVB	217 - 89
118B03AD	♦EEVB	217 - 90
118B03BF	♦EEVB	217 - 91
118B03BG	♦EEVB	217 - 92
118B03BH	♦EEVB	217 - 93
118B03BK	♦EEVB	217 - 94
118F01AA	♦EEVB	217 - 95
118F01AB	♦EEVB	217 - 96
118F01AC	♦EEVB	217 - 97
118F01AD	♦EEVB	217 - 98
118F01BF	♦EEVB	217 - 99
118F01BG	♦EEVB	217 -100
118F01BH	♦EEVB	217 -101
118F01BK	♦EEVB	217 -102
118F03AA	♦EEVB	217 -103
118F03AB	♦EEVB	217 -104
118F03AC	♦EEVB	217 -105
118F03AD	♦EEVB	217 -106
118F03BF	♦EEVB	217 -107
118F03BG	♦EEVB	217 -108
118F03BH	♦EEVB	217 -109
118F03BK	♦EEVB	218 - 1
119B07AA	♦EEVB	206 - 67
119B07AB	♦EEVB	206 - 68
119B07AC	♦EEVB	206 - 69
119B07AD	♦EEVB	206 - 70
120-1	HEI	233 - 21
121B07AA	♦EEVB	218 - 2
121B07AB	♦EEVB	218 - 3
121B07AC	♦EEVB	218 - 4
121B07AD	♦EEVB	218 - 5
121F07AA	♦EEVB	218 - 6
121F07AB	♦EEVB	218 - 7
121F07AC	♦EEVB	218 - 8
121F07AD	♦EEVB	218 - 9
122B01AA	♦EEVB	208 - 59
122B01AB	♦EEVB	208 - 60
122B01AC	♦EEVB	208 - 61
122B01AD	♦EEVB	208 - 62
123B01AA	♦EEVB	218 - 30
123B01AB	♦EEVB	218 - 31
123B01AC	♦EEVB	218 - 32
123B01AD	♦EEVB	218 - 33
123B03BF	♦EEVB	218 - 34
123B03BG	♦EEVB	218 - 35
123B03BH	♦EEVB	218 - 36
123B03BK	♦EEVB	218 - 37
123F01AA	♦EEVB	218 - 38
123F01AB	♦EEVB	218 - 39
123F01AC	♦EEVB	218 - 40
123F01AD	♦EEVB	218 - 41
123F03BF	♦EEVB	218 - 42
123F03BG	♦EEVB	218 - 43
123F03BH	♦EEVB	218 - 44
123F03BK	♦EEVB	218 - 45
124B01AA	♦EEVB	208 - 43
124B01AB	♦EEVB	208 - 44
124B01AC	♦EEVB	208 - 45
124B01AD	♦EEVB	208 - 46
124B03BF	♦EEVB	208 - 47
124B03BG	♦EEVB	208 - 48
124B03BH	♦EEVB	208 - 49
124B03BK	♦EEVB	208 - 50
124F01AA	♦EEVB	208 - 51
124F01AB	♦EEVB	208 - 52
124F01AC	♦EEVB	208 - 53
124F01AD	♦EEVB	208 - 54
124F03BF	♦EEVB	208 - 55
124F03BG	♦EEVB	208 - 56
124F03BH	♦EEVB	208 - 57
124F03BK	♦EEVB	208 - 58
125-1	HEI	158 - 61
126B07AA	♦EEVB	206 - 21
126B07AB	♦EEVB	206 - 22
126B07AC	♦EEVB	206 - 23

Δ-Registered with JEDEC by this manufacturer

♦-Mfr's data sheet available in microfilm service

1. TYPE No. CROSS INDEX

IN TYPE NUMBER SEQUENCE

TYPE No.	MFRS	Pg&Line
126B07AD	♦EEVB	206 - 24
127B01AA	♦EEVB	223 - 8
127B01AB	♦EEVB	223 - 9
127B01AC	♦EEVB	223 - 10
127B01AD	♦EEVB	223 - 11
127B03BF	♦EEVB	223 - 12
127B03BG	♦EEVB	223 - 13
127B03BH	♦EEVB	223 - 14
127B03BK	♦EEVB	223 - 15
127F01AA	♦EEVB	223 - 16
127F01AB	♦EEVB	223 - 17
127F01AC	♦EEVB	223 - 18
127F01AD	♦EEVB	223 - 19
127F03BF	♦EEVB	223 - 20
127F03BG	♦EEVB	223 - 21
127F03BH	♦EEVB	223 - 22
127F03BK	♦EEVB	223 - 23
128B01AA	♦EEVB	223 - 24
128B01AB	♦EEVB	223 - 25
128B01AC	♦EEVB	223 - 26
128B01AD	♦EEVB	223 - 27
128B03BF	♦EEVB	223 - 28
128B03BG	♦EEVB	223 - 29
128B03BH	♦EEVB	223 - 30
128B03BK	♦EEVB	223 - 31
128F01AA	♦EEVB	223 - 32
128F01AB	♦EEVB	223 - 33
128F01AC	♦EEVB	223 - 34
128F01AD	♦EEVB	223 - 35
128F03BF	♦EEVB	223 - 36
128F03BG	♦EEVB	223 - 37
128F03BH	♦EEVB	223 - 38
128F03BK	♦EEVB	223 - 39
129B01AA	♦EEVB	205 - 19
129B01AB	♦EEVB	205 - 20
129B01AC	♦EEVB	205 - 21
129B01AD	♦EEVB	205 - 22
129B03BF	♦EEVB	205 - 23
129B03BG	♦EEVB	205 - 24
129B03BH	♦EEVB	205 - 25
129B03BK	♦EEVB	205 - 26
130B01AA	♦EEVB	205 - 11
130B01AB	♦EEVB	205 - 12
130B01AC	♦EEVB	205 - 13
130B01AD	♦EEVB	205 - 14
130B03BF	♦EEVB	205 - 15
130B03BG	♦EEVB	205 - 16
130B03BH	♦EEVB	205 - 17
130B03BK	♦EEVB	205 - 18
131F01AA	♦EEVB	214 - 4
131F01AB	♦EEVB	214 - 5
131F01AC	♦EEVB	214 - 6
131F01AD	♦EEVB	214 - 7
131F03BF	♦EEVB	214 - 8
131F03BG	♦EEVB	214 - 9
131F03BH	♦EEVB	214 - 10
131F03BK	♦EEVB	214 - 11
131N01AA	♦EEVB	214 - 12
131N01AB	♦EEVB	214 - 13
131N01AC	♦EEVB	214 - 14
131N01AD	♦EEVB	214 - 15
131N03BF	♦EEVB	214 - 16
131N03BG	♦EEVB	214 - 17
131N03BH	♦EEVB	214 - 18
131N03BK	♦EEVB	214 - 19
200PIN-BNC	♦QTC	104 - 90
200PIN-PP	♦QTC	104 - 91
200PIN-RM	QTC	104 - 92
200PV-BNC	♦QTC	108 - 61
200PV-PP	♦QTC	108 - 62
200PV-RM	♦QTC	108 - 63
249-7867-3331-504		
	♦DIA	233 - 71
249-7867-3335-504		
	♦DIA	233 - 72
249-7867-3337-504		
	♦DIA	233 - 73
249-7868-3331-504		
	♦DIA	233 - 74
249-7868-3335-504		
	♦DIA	233 - 75
249-7868-3337-504		
	♦DIA	233 - 76
249-7869-3331-504		
	♦DIA	233 - 77
249-7869-3335-504		
	♦DIA	233 - 78
249-7869-3337-504		
	♦DIA	233 - 79
249-7870-3331-504		
	♦DIA	233 - 80
249-7870-3335-504		
	♦DIA	233 - 81
249-7870-3337-504		
	♦DIA	233 - 82
249-7871-3331-504		
	♦DIA	233 - 83
249-7871-3337-504		
	♦DIA	233 - 84
249-7872-3331-504		
	♦DIA	233 - 85
249-7872-3335-504		
	♦DIA	233 - 86
249-7872-3337-504		
	♦DIA	233 - 87
249-7967-3332-504		
	♦DIA	233 - 88
249-7967-3335-504		
	♦DIA	233 - 89
249-7967-3337-504		
	♦DIA	233 - 90
249-7968-3332-504		
	♦DIA	234 - 1

TYPE No.	MFRS	Pg&Line
249-7968-3335-504		
	♦DIA	234 - 2
249-7968-3337-504		
	♦DIA	234 - 3
249-7969-3332-504		
	♦DIA	234 - 4
249-7969-3335-504		
	♦DIA	234 - 5
249-7969-3337-504		
	♦DIA	234 - 6
249-7970-3332-504		
	♦DIA	234 - 7
249-7970-3335-504		
	♦DIA	234 - 8
249-7970-3337-504		
	♦DIA	234 - 9
249-7971-3332-504		
	♦DIA	234 - 10
249-7971-3335-504		
	♦DIA	234 - 11
249-7971-3337-504		
	♦DIA	234 - 12
249-7972-3332-504		
	♦DIA	234 - 13
249-7972-3335-504		
	♦DIA	234 - 14
249-7972-3337-504		
	♦DIA	234 - 15
249-8067-3333-504		
	♦DIA	234 - 16
249-8067-3335-504		
	♦DIA	234 - 17
249-8067-3337-504		
	♦DIA	234 - 18
249-8068-3333-504		
	♦DIA	234 - 19
249-8068-3335-504		
	♦DIA	234 - 20
249-8068-3337-504		
	♦DIA	234 - 21
249-8069-3333-504		
	♦DIA	234 - 22
249-8069-3335-504		
	♦DIA	234 - 23
249-8069-3337-504		
	♦DIA	234 - 24
249-8070-3333-504		
	♦DIA	234 - 25
249-8070-3335-504		
	♦DIA	234 - 26
249-8070-3337-504		
	♦DIA	234 - 27
249-8071-3333-504		
	♦DIA	234 - 28
249-8071-3335-504		
	♦DIA	234 - 29
249-8072-3333-504		
	♦DIA	234 - 30
249-8072-3335-504		
	♦DIA	234 - 31
282R9R21GHB	♦LXD	216 - 76
304(2)	EII	233 - 25
347D3R99H	♦LXD	221 - 3
347D8R99H	♦LXD	221 - 4
347E3R99GH	♦LXD	221 - 5
347E3R99H	♦LXD	221 - 6
347E8R99H	♦LXD	221 - 7
347R3R99H	♦LXD	221 - 8
350-1	♦BAR	103 - 24
350-2	♦BAR	103 - 25
350-3	♦BAR	103 - 26
350-4	♦BAR	103 - 27
350-5	♦BAR	103 - 28
350E3R99GH	♦LXD	219 - 73
350E3R99H	♦LXD	219 - 74
350E8R99H	♦LXD	219 - 75
353D3R03H	♦LXD	209 - 97
353D8R03H	♦LXD	209 - 98
353E3R03GH	♦LXD	209 - 99
353E3R03H	♦LXD	209 -100
353E8R03H	♦LXD	209 -101
353R3R03GH	♦LXD	209 -102
368BPY	♦MULB	99 - 24
♦PHIN	RTCF	
	♦VALG	
375CQY	♦APX	96 - 60
MULB	PHIN	
RTCF	VALG	
375CQY/B	♦APX	231 - 30
♦MULB	♦PHIN	
♦RTCF	♦VALG	
375CQY/B-A	♦PHIN	231 - 31
375CQY/B-B	♦PHIN	231 - 32
375CQY/B-C	♦PHIN	231 - 33
393D3R99H	♦LXD	222 - 31
393D8R99H	♦LXD	222 - 32
393E3R99GH	♦LXD	222 - 33
393E3R99H	♦LXD	222 - 34
393E8R99H	♦LXD	222 - 35
400(2)	♦EII	125 - 41
400PIN-RM	♦QTC	104 - 93
400PV-RM	♦QTC	108 - 66
404(3)	♦EII	124 - 60
404CM	♦EII	124 - 61
404VM	♦EII	124 - 95
406(2)	♦EII	124 - 62
407(2)	♦EII	124 - 87
408(2)	♦EII	124 - 63
414(1)	♦EII	124 - 88
416D5R99H	♦LXD	222 - 98
416E3R99GH	♦LXD	222 - 99
416E5R99H	♦LXD	222 -100
416E9R99GH	♦LXD	222 -101
416R3R99GH	♦LXD	222 -102

TYPE No.	MFRS	Pg&Line
416R9R99GH	♦LXD	223 - 1
419	♦EII	124 - 89
420(3)	♦EII	124 - 96
421(2)	♦EII	124 - 90
429(1)	♦EII	124 - 91
450-1	♦BAR	103 - 19
450-2	♦BAR	103 - 20
450-3	♦BAR	103 - 21
450-4	♦BAR	103 - 22
450-5	♦BAR	103 - 23
497CQF/A(A)	♦APX	231 - 34
♦MULB	♦PHIN	
♦RTCF	♦VALG	
497CQF/A-A(A)		231 - 35
♦APX	♦PHIN	
497CQF/A-B(A)		231 - 36
♦APX	♦PHIN	
497CQF/A-C(A)		231 - 37
♦APX	♦PHIN	
498CQL(A)	♦MULB	231 - 38
♦PHIN	♦RTCF	
	♦VALG	
501(1)	♦BAR	99 - 58
502(2)	♦BAR	99 - 51
502CQF(A)	♦MULB	96 - 61
♦PHIN	♦RTCF	
	♦VALG	
503(2)	♦BAR	99 - 48
503CQF(A)	♦MULB	96 - 49
♦PHIN	♦RTCF	
	♦VALG	
504CQL	♦MULB	96 - 96
♦PHIN	♦RTCF	
	♦VALG	
507-4756-3331-500		
	♦DIA	234 - 32
507-4756-3335-500		
	♦DIA	234 - 33
507-4756-3337-500		
	♦DIA	234 - 34
507-4757-3331-500		
	♦DIA	234 - 35
507-4757-3335-500		
	♦DIA	234 - 36
507-4757-3337-500		
	♦DIA	234 - 37
507-4758-3331-500		
	♦DIA	234 - 38
507-4758-3335-500		
	♦DIA	234 - 39
507-4758-3337-500		
	♦DIA	234 - 40
507-4759-3331-500		
	♦DIA	234 - 41
507-4759-3335-500		
	♦DIA	234 - 42
507-4759-3337-500		
	♦DIA	234 - 43
507-4760-3331-500		
	♦DIA	234 - 44
507-4760-3335-500		
	♦DIA	234 - 45
507-4760-3337-500		
	♦DIA	234 - 46
507-4761-3331-500		
	♦DIA	234 - 47
507-4761-3335-500		
	♦DIA	234 - 48
507-4856-3332-500		
	♦DIA	234 - 49
507-4856-3335-500		
	♦DIA	234 - 50
507-4856-3337-500		
	♦DIA	234 - 51
507-4857-3332-500		
	♦DIA	234 - 52
507-4857-3335-500		
	♦DIA	234 - 53
507-4857-3337-500		
	♦DIA	234 - 54
507-4858-3332-500		
	♦DIA	234 - 55
507-4858-3335-500		
	♦DIA	235 - 1
507-4858-3337-500		
	♦DIA	235 - 2
507-4859-3332-500		
	♦DIA	235 - 3
507-4859-3335-500		
	♦DIA	235 - 4
507-4859-3337-500		
	♦DIA	235 - 5
507-4860-3332-500		
	♦DIA	235 - 6
507-4860-3335-500		
	♦DIA	235 - 7
507-4860-3337-500		
	♦DIA	235 - 8
507-4861-3332-500		
	♦DIA	235 - 9
507-4861-3335-500		
	♦DIA	235 - 10
507-4861-3337-500		
	♦DIA	235 - 11
507-4956-3333-500		
	♦DIA	235 - 12
507-4956-3335-500		
	♦DIA	235 - 13
507-4956-3337-500		
	♦DIA	235 - 14
507-4957-3333-500		
	♦DIA	235 - 15
507-4957-3335-500		
	♦DIA	235 - 16

TYPE No.	MFRS	Pg&Line
507-4957-3337-500		
	♦DIA	235 - 17
507-4958-3333-500		
	♦DIA	235 - 18
507-4958-3335-500		
	♦DIA	235 - 19
507-4958-3337-500		
	♦DIA	235 - 20
507-4959-3333-500		
	♦DIA	235 - 21
507-4959-3335-500		
	♦DIA	235 - 22
507-4959-3337-500		
	♦DIA	235 - 23
507-4960-3333-500		
	♦DIA	235 - 24
507-4960-3335-500		
	♦DIA	235 - 25
507-4960-3337-500		
	♦DIA	235 - 26
507-4961-3333-500		
	♦DIA	235 - 27
507-4961-3335-500		
	♦DIA	235 - 28
507-4961-3337-500		
	♦DIA	235 - 29
509-01	♦CPD	125 - 13
509-1	♦CPD	125 - 14
509-10	♦CPD	125 - 15
509-50	♦CPD	125 - 16
516CQF-B(A)	PHIN	96 - 92
519(2)	♦EII	124 - 92
521-9165	♦DIA	50 - 36
521-9166	♦DIA	50 - 37
521-9173	♦DIA	74 - 44
521-9174	♦DIA	64 -108
521-9175	♦DIA	74 - 45
521-9176	♦DIA	64 -109
521-9177	♦DIA	78 -105
521-9178	♦DIA	78 - 94
521-9180	♦DIA	50 - 38
521-9181	♦DIA	49 - 97
521-9183	♦DIA	45 -100
521-9184	♦DIA	45 -101
521-9185	♦DIA	55 - 48
521-9186	♦DIA	45 -107
521-9190	♦DIA	45 - 76
521-9195	♦DIA	40 -107
521-9200	♦DIA	45 - 86
521-9201	♦DIA	74 - 67
521-9208	♦DIA	65 - 19
521-9210	♦DIA	71 - 92
521-9211	♦DIA	62 - 70
521-9214	♦DIA	41 - 37
521-9215	♦DIA	41 - 53
521-9216	♦DIA	42 - 2
521-9222	♦DIA	49 - 98
521-9223	♦DIA	49 - 99
521-9240	♦DIA	45 - 77
521-9246	♦DIA	51 - 38
521-9247	♦DIA	53 - 69
521-9248	♦DIA	65 - 82
521-9249	♦DIA	67 - 97
521-9250	♦DIA	75 - 14
521-9251	♦DIA	77 - 61
521-9253	♦DIA	74 - 46
521-9254	♦DIA	64 -110
521-9264	♦DIA	49 - 29
521-9265	♦DIA	65 - 63
521-9266	♦DIA	74 - 21
521-9294	♦DIA	43 - 13
529-01-1	♦CPD	125 - 20
529-01-5	♦CPD	125 - 21
529-2-1	♦CPD	125 - 22
529-2-5	♦CPD	125 - 23
539-01-1	CPD	124 - 9
539-01-5	CPD	124 - 10
539-003-1	CPD	124 - 11
539-003-5	CPD	124 - 12
539-005-1	CPD	124 - 13
539-005-5	CPD	124 - 14
547-2001	♦DIA	51 - 58
547-2002	♦DIA	50 - 39
547-2003	♦DIA	47 - 69
547-2004	♦DIA	50 - 33
547-2005	♦DIA	40 - 24
547-2006	♦DIA	46 - 28
547-2007	♦DIA	44 - 43
547-2008	♦DIA	46 - 29
547-2301	♦DIA	72 - 77
547-2303	♦DIA	70 - 51
547-2401	♦DIA	65 - 33
547-2403	♦DIA	61 -108
549-0101	♦DIA	50 - 61
549-0104	♦DIA	50 - 32
549-0201	♦DIA	75 - 97
549-0301	♦DIA	66 - 53
550-0204	♦DIA	74 - 47
550-0204-004	♦DIA	91 -101
550-0205	♦DIA	74 - 48
550-0206	♦DIA	74 - 57
550-0206-004	♦DIA	91 -102
550-0304	♦DIA	65 - 1
550-0304-004	♦DIA	91 - 81
550-0305	♦DIA	65 - 2
550-0306	♦DIA	65 - 11
550-0306-004	♦DIA	91 -103
550-0404	♦DIA	45 - 87
550-0404-004	♦DIA	91 - 53
550-0405	♦DIA	45 - 88
550-0406	♦DIA	45 - 93
550-0406-004	♦DIA	92 - 5
550-0504	♦DIA	45 - 80
550-0505	♦DIA	45 - 68

TYPE No.	MFRS	Pg&Line
550-0506	♦DIA	45 - 94
550-0604	♦DIA	45 - 81
550-0605	♦DIA	45 - 69
550-0606	♦DIA	45 - 95
550-0704	♦DIA	71 - 72
550-0705	♦DIA	71 - 73
550-0706	♦DIA	71 - 74
550-0804	♦DIA	62 - 60
550-0805	♦DIA	62 - 61
550-0806	♦DIA	62 - 62
550-2204	♦DIA	75 - 5
550-2204-004	♦DIA	91 -105
550-2205	♦DIA	75 - 6
550-2205-004	♦DIA	91 -106
550-2206	♦DIA	75 - 13
550-2206-004	♦DIA	91 -107
550-2304	♦DIA	65 - 65
550-2304-004	♦DIA	91 - 84
550-2305	♦DIA	65 - 66
550-2305-004	♦DIA	91 - 85
550-2306	♦DIA	65 - 81
550-2306-004	♦DIA	91 - 86
550-2404	♦DIA	51 - 1
550-2404-004	♦DIA	91 - 57
550-2405	♦DIA	51 - 2
550-2405-004	♦DIA	91 - 58
550-2406	♦DIA	51 - 28
550-2406-004	♦DIA	91 - 59
550-3004	DIA	78 -106
550-3005	DIA	78 -107
550-3006	♦DIA	79 - 5
550-3006-004	♦DIA	79 - 30
550-5104	♦DIA	53 -105
550-5104-004	♦DIA	91 - 63
550-5105	♦DIA	53 -106
550-5105-004	♦DIA	91 - 64
550-5106	♦DIA	54 - 21
550-5106-004	♦DIA	91 - 65
550-5204	♦DIA	76 - 99
550-5204-004	♦DIA	91 -108
550-5205	♦DIA	76 -100
550-5205-004	♦DIA	91 -109
550-5206	♦DIA	77 - 20
550-5206-004	♦DIA	91 -110
550-5304	♦DIA	68 - 48
550-5304-004	♦DIA	91 - 89
550-5305	♦DIA	68 - 49
550-5305-004	♦DIA	91 - 90
550-5306	♦DIA	68 - 73
550-5306-004	♦DIA	91 - 91
550-5404	♦DIA	59 - 74
550-5404-004	♦DIA	91 - 72
550-5405	♦DIA	59 - 75
550-5405-004	♦DIA	91 - 73
550-5406	♦DIA	59 - 88
550-5406-004	♦DIA	91 - 74
550-5504	♦DIA	54 -100
550-5504-004	♦DIA	91 - 67
550-5505	♦DIA	54 -101
550-5505-004	♦DIA	91 - 68
550-5506	♦DIA	55 - 2
550-5506-004	♦DIA	91 - 69
550-5604	♦DIA	78 - 34
550-5604-004	♦DIA	92 - 2
550-5605	♦DIA	78 - 35
550-5605-004	♦DIA	92 - 3
550-5606	♦DIA	78 - 49
550-5606-004	♦DIA	92 - 4
550-5704	♦DIA	68 -108
550-5704-004	♦DIA	91 - 92
550-5705	♦DIA	68 -109
550-5705-004	♦DIA	91 - 93
550-5706	♦DIA	69 - 13
550-5706-004	♦DIA	91 - 94
550-5804	♦DIA	60 - 33
550-5804-004	♦DIA	91 - 75
550-5805	♦DIA	60 - 34
550-5805-004	♦DIA	91 - 76
550-5806	♦DIA	60 - 49
550-5806-004	♦DIA	91 - 77
551-0205	♦DIA	71 - 93
551-0305	♦DIA	62 - 71
551-0405	♦DIA	42 - 14
551-0505	♦DIA	41 - 89
555-2001	♦DIA	51 - 59
555-2002	♦DIA	50 - 40
555-2003	♦DIA	47 - 70
555-2004	♦DIA	50 - 34
555-2005	♦DIA	40 - 4
555-2006	♦DIA	46 - 30
555-2007	♦DIA	44 - 42
555-2008	♦DIA	46 - 31
555-2301	♦DIA	72 - 78
555-2303	♦DIA	70 - 52
555-2401	♦DIA	65 - 34
555-2403	♦DIA	61 -109
555-3001	♦DIA	50 - 41
555-3002	♦DIA	50 - 42
555-3003	♦DIA	45 - 54
555-3004	♦DIA	50 - 35
555-3005	♦DIA	40 - 5
555-3006	♦DIA	46 - 32
555-3007	♦DIA	42 - 28
555-3008	♦DIA	46 - 33
555-3301	♦DIA	69 - 36
555-3303	♦DIA	69 - 37
555-3401	♦DIA	60 - 58
555-3403	♦DIA	60 - 59
555-4001	♦DIA	91 - 60
555-4003	♦DIA	91 - 54
555-4004	♦DIA	91 - 55
555-4007	♦DIA	91 - 51
555-4301	♦DIA	91 - 98
555-4303	♦DIA	91 - 95

Δ-Registered with JEDEC by this manufacturer

♦-Mfr's data sheet available in microfilm service

1. TYPE No. CROSS INDEX

IN TYPE NUMBER SEQUENCE

TYPE No.	MFRS	Pg&Line
555-4401	♦DIA	91 - 82
555-4403	♦DIA	91 - 79
558-0101-001	♦DIA	42 - 5
558-0101-003	♦DIA	42 - 6
558-0101-004	♦DIA	42 - 7
558-0101-005	♦DIA	42 - 8
558-0101-006	♦DIA	42 - 9
558-0101-007	♦DIA	42 - 10
558-0102-001	♦DIA	41 - 54
558-0102-003	♦DIA	41 - 55
558-0102-004	♦DIA	41 - 56
558-0102-005	♦DIA	41 - 57
558-0102-006	♦DIA	41 - 58
558-0102-007	♦DIA	41 - 59
558-0201-001	♦DIA	71 - 94
558-0201-003	♦DIA	72 - 1
558-0201-004	♦DIA	72 - 2
558-0201-005	♦DIA	72 - 3
558-0201-006	♦DIA	72 - 4
558-0201-007	♦DIA	72 - 5
558-0202-001	♦DIA	70 - 55
558-0202-003	♦DIA	70 - 56
558-0202-004	♦DIA	70 - 57
558-0202-005	♦DIA	70 - 58
558-0202-006	♦DIA	70 - 59
558-0202-007	♦DIA	70 - 60
558-0301-001	♦DIA	63 - 53
558-0301-003	♦DIA	63 - 54
558-0301-004	♦DIA	63 - 55
558-0301-005	♦DIA	63 - 56
558-0301-006	♦DIA	63 - 57
558-0301-007	♦DIA	63 - 58
558-0302-001	♦DIA	61 - 53
558-0302-003	♦DIA	61 - 54
558-0302-004	♦DIA	61 - 55
558-0302-005	♦DIA	61 - 56
558-0302-006	♦DIA	61 - 57
558-0302-007	♦DIA	61 - 58
559-0101-001	♦DIA	48 - 88
559-0101-003	♦DIA	48 - 89
559-0101-004	♦DIA	48 - 90
559-0101-005	♦DIA	48 - 91
559-0101-006	♦DIA	45 - 61
559-0101-007	♦DIA	45 - 62
559-0102-001	♦DIA	45 - 28
559-0102-003	♦DIA	45 - 29
559-0102-004	♦DIA	45 - 30
559-0102-005	♦DIA	45 - 31
559-0102-006	♦DIA	45 - 32
559-0102-007	♦DIA	45 - 33
559-0103-001	♦DIA	45 - 34
559-0103-003	♦DIA	45 - 35
559-0103-004	♦DIA	45 - 36
559-0103-005	♦DIA	45 - 37
559-0103-006	♦DIA	45 - 38
559-0103-007	♦DIA	45 - 39
559-0201-001	♦DIA	74 - 50
559-0201-003	♦DIA	74 - 51
559-0201-004	♦DIA	74 - 52
559-0201-005	♦DIA	74 - 53
559-0201-006	♦DIA	74 - 54
559-0201-007	♦DIA	74 - 55
559-0202-001	♦DIA	71 - 75
559-0202-003	♦DIA	71 - 76
559-0202-004	♦DIA	71 - 77
559-0202-005	♦DIA	71 - 78
559-0202-006	♦DIA	71 - 79
559-0202-007	♦DIA	71 - 80
559-0301-001	♦DIA	65 - 4
559-0301-003	♦DIA	65 - 5
559-0301-004	♦DIA	65 - 6
559-0301-005	♦DIA	65 - 7
559-0301-006	♦DIA	65 - 8
559-0301-007	♦DIA	65 - 9
559-0302-001	♦DIA	62 - 63
559-0302-003	♦DIA	62 - 64
559-0302-004	DIA	62 - 65
559-0302-005	DIA	62 - 66
559-0302-006	DIA	62 - 67
559-0302-007	DIA	62 - 68
559-2101-001	♦DIA	51 - 9
559-2101-003	♦DIA	51 - 10
559-2101-004	♦DIA	51 - 11
559-2101-005	♦DIA	51 - 12
559-2101-006	♦DIA	51 - 13
559-2101-007	♦DIA	51 - 14
559-2201-001	♦DIA	75 - 7
559-2201-003	♦DIA	75 - 8
559-2201-004	♦DIA	75 - 9
559-2201-005	♦DIA	75 - 10
559-2201-006	♦DIA	75 - 11
559-2201-007	♦DIA	75 - 12
559-2301-001	♦DIA	65 - 67
559-2301-003	♦DIA	65 - 68
559-2301-004	♦DIA	65 - 69
559-2301-005	♦DIA	65 - 70
559-2301-006	♦DIA	65 - 71
559-2301-007	♦DIA	65 - 72
559-3001-001	♦DIA	79 - 31
559-3001-003	♦DIA	79 - 32
559-3001-004	♦DIA	79 - 33
559-3001-005	♦DIA	79 - 34
559-3001-006	♦DIA	79 - 35
559-3001-007	♦DIA	79 - 36
559-3501-003	♦DIA	78 - 86
559-3501-004	♦DIA	78 - 87
559-3501-005	♦DIA	78 - 88
559-3501-006	♦DIA	78 - 89
559-3501-007	♦DIA	78 - 90
559-4101-001	♦DIA	45 - 89
559-4101-003	♦DIA	45 - 82
559-4101-004	♦DIA	45 - 83
559-4101-005	♦DIA	45 - 84
559-4101-006	♦DIA	45 - 85

TYPE No.	MFRS	Pg&Line
559-4101-007	♦DIA	45 - 90
559-4201-001	♦DIA	71 - 22
559-4201-003	♦DIA	71 - 35
559-4201-004	♦DIA	71 - 36
559-4201-005	♦DIA	71 - 37
559-4201-006	♦DIA	71 - 38
559-4201-007	♦DIA	71 - 23
559-4301-001	♦DIA	62 - 7
559-4301-003	♦DIA	62 - 25
559-4301-004	♦DIA	62 - 26
559-4301-005	♦DIA	62 - 27
559-4301-006	♦DIA	62 - 28
559-4301-007	♦DIA	62 - 8
559-5101-001	♦DIA	54 - 6
559-5101-003	♦DIA	54 - 7
559-5101-004	♦DIA	54 - 8
559-5101-005	♦DIA	54 - 9
559-5101-006	♦DIA	54 - 10
559-5101-007	♦DIA	54 - 11
559-5201-001	♦DIA	77 - 7
559-5201-003	♦DIA	77 - 8
559-5201-004	♦DIA	77 - 9
559-5201-005	♦DIA	77 - 10
559-5201-006	♦DIA	77 - 11
559-5201-007	♦DIA	77 - 12
559-5301-001	♦DIA	68 - 60
559-5301-003	♦DIA	68 - 61
559-5301-004	♦DIA	68 - 62
559-5301-005	♦DIA	68 - 63
559-5301-006	♦DIA	68 - 64
559-5301-007	♦DIA	68 - 65
559-5401-001	♦DIA	59 - 76
559-5401-003	♦DIA	59 - 77
559-5401-004	♦DIA	59 - 78
559-5401-005	♦DIA	59 - 79
559-5401-006	♦DIA	59 - 80
559-5401-007	♦DIA	59 - 81
559-5501-001	♦DIA	54 -103
559-5501-003	♦DIA	54 -104
559-5501-004	♦DIA	54 -105
559-5501-005	♦DIA	54 - 60
559-5501-006	♦DIA	54 - 61
559-5501-007	♦DIA	54 - 62
559-5601-001	♦DIA	78 - 37
559-5601-003	♦DIA	78 - 38
559-5601-004	♦DIA	78 - 39
559-5601-005	♦DIA	78 - 40
559-5601-006	♦DIA	78 - 41
559-5601-007	♦DIA	78 - 42
559-5701-001	♦DIA	69 - 1
559-5701-003	♦DIA	69 - 2
559-5701-004	♦DIA	69 - 3
559-5701-005	♦DIA	69 - 4
559-5701-006	♦DIA	69 - 5
559-5701-007	♦DIA	69 - 6
559-5801-001	♦DIA	60 - 37
559-5801-003	♦DIA	60 - 38
559-5801-004	♦DIA	60 - 39
559-5801-005	♦DIA	60 - 40
559-5801-006	♦DIA	60 - 41
559-5801-007	♦DIA	60 - 42
560-0101	♦DIA	54 - 30
560-0102	♦DIA	54 - 31
560-0103	♦DIA	54 - 32
560-0104	♦DIA	54 - 33
560-0105	♦DIA	54 - 34
560-0106	♦DIA	54 - 35
560-0107	♦DIA	54 - 36
560-0108	♦DIA	59 -109
560-0201	♦DIA	77 - 25
560-0202	♦DIA	77 - 26
560-0203	♦DIA	77 - 27
560-0204	♦DIA	77 - 28
560-0205	♦DIA	77 - 29
560-0206	♦DIA	77 - 30
560-0207	♦DIA	77 - 31
560-0208	♦DIA	77 - 32
560-0301	♦DIA	68 - 94
560-0302	♦DIA	68 - 95
560-0304	♦DIA	68 - 96
560-0305	♦DIA	68 - 97
560-0306	♦DIA	68 - 98
560-0307	♦DIA	68 - 99
560-0308	♦DIA	68 -100
560-0401	♦DIA	55 - 8
560-0402	♦DIA	55 - 9
560-0403	♦DIA	55 - 10
560-0404	♦DIA	55 - 11
560-0405	♦DIA	55 - 12
560-0406	♦DIA	55 - 13
560-0407	♦DIA	55 - 14
560-0408	♦DIA	55 - 15
560-0501	♦DIA	77 -109
560-0502	♦DIA	59 -110
560-0503	♦DIA	60 - 1
560-0504	♦DIA	60 - 2
560-0505	♦DIA	60 - 3
560-0506	♦DIA	60 - 4
560-0507	♦DIA	60 - 5
560-0508	♦DIA	60 - 6
560-0601	♦DIA	69 - 16
560-0602	♦DIA	69 - 17
560-0603	♦DIA	69 - 18
560-0604	♦DIA	69 - 19
560-0605	♦DIA	69 - 20
560-0606	♦DIA	69 - 21
560-0607	♦DIA	69 - 22
560-0608	♦DIA	69 - 23
561-0101-050	♦DIA	46 - 48
561-0101-060	♦DIA	46 - 49
561-0101-070	♦DIA	46 - 50
561-0101-080	♦DIA	46 - 51
561-0101-090	♦DIA	46 - 52
561-0101-100	♦DIA	46 - 53

TYPE No.	MFRS	Pg&Line
561-2101-050	♦DIA	51 - 15
561-2101-060	♦DIA	51 - 16
561-2101-070	♦DIA	51 - 17
561-2101-080	♦DIA	51 - 18
561-2101-090	♦DIA	51 - 19
561-2101-100	♦DIA	51 - 20
561-2201-050	♦DIA	75 - 84
561-2201-060	♦DIA	75 - 85
561-2201-070	♦DIA	75 - 86
561-2201-080	♦DIA	75 - 87
561-2201-090	♦DIA	75 - 88
561-2201-100	♦DIA	75 - 89
561-2301-050	♦DIA	65 - 73
561-2301-060	♦DIA	65 - 74
561-2301-070	♦DIA	65 - 75
561-2301-080	♦DIA	65 - 76
561-2301-090	♦DIA	65 - 77
561-2301-100	♦DIA	65 - 78
561-2401-050	♦DIA	53 - 63
561-2401-060	♦DIA	53 - 64
561-2401-070	♦DIA	53 - 65
561-2401-080	♦DIA	53 - 66
561-2401-090	♦DIA	53 - 67
561-2401-100	♦DIA	53 - 68
561-2501-050	♦DIA	77 - 55
561-2501-060	♦DIA	77 - 56
561-2501-070	♦DIA	77 - 57
561-2501-080	♦DIA	77 - 58
561-2501-090	♦DIA	77 - 59
561-2501-100	♦DIA	77 - 60
561-2601-050	♦DIA	67 - 91
561-2601-060	♦DIA	67 - 92
561-2601-070	♦DIA	67 - 93
561-2601-080	♦DIA	67 - 94
561-2601-090	♦DIA	67 - 95
561-2601-100	♦DIA	67 - 96
561-5101-050	♦DIA	54 - 12
561-5101-060	♦DIA	54 - 13
561-5101-070	♦DIA	54 - 14
561-5101-080	♦DIA	54 - 15
561-5101-090	♦DIA	54 - 16
561-5101-100	♦DIA	54 - 17
561-5201-050	♦DIA	77 - 13
561-5201-060	♦DIA	77 - 14
561-5201-070	♦DIA	77 - 15
561-5201-080	♦DIA	77 - 16
561-5201-090	♦DIA	77 - 17
561-5201-100	♦DIA	77 - 18
561-5301-050	♦DIA	68 - 66
561-5301-060	♦DIA	68 - 67
561-5301-070	♦DIA	68 - 68
561-5301-080	♦DIA	68 - 69
561-5301-090	♦DIA	68 - 70
561-5301-100	♦DIA	68 - 71
561-5401-050	♦DIA	59 - 82
561-5401-060	♦DIA	59 - 83
561-5401-070	♦DIA	59 - 84
561-5401-080	♦DIA	59 - 85
561-5401-090	♦DIA	59 - 86
561-5401-100	♦DIA	59 - 87
561-5501-050	♦DIA	54 -106
561-5501-060	♦DIA	54 -107
561-5501-070	♦DIA	54 -108
561-5501-080	♦DIA	54 -109
561-5501-090	♦DIA	54 -110
561-5501-100	♦DIA	55 - 1
561-5601-050	♦DIA	78 - 43
561-5601-060	♦DIA	78 - 44
561-5601-070	♦DIA	78 - 45
561-5601-080	♦DIA	78 - 46
561-5601-090	♦DIA	78 - 47
561-5601-100	♦DIA	78 - 48
561-5701-050	♦DIA	69 - 7
561-5701-060	♦DIA	69 - 8
561-5701-070	♦DIA	69 - 9
561-5701-080	♦DIA	69 - 10
561-5701-090	♦DIA	69 - 11
561-5701-100	♦DIA	69 - 12
561-5801-050	♦DIA	60 - 43
561-5801-060	♦DIA	60 - 44
561-5801-070	♦DIA	60 - 45
561-5801-080	♦DIA	60 - 46
561-5801-090	♦DIA	60 - 47
561-5801-100	♦DIA	60 - 48
600PIN-RM	♦QTC	104 - 94
600PV-RM	♦QTC	108 - 68
706-1	♦BEC	204 - 51
708-1	♦BEC	204 - 70
708-2	♦BEC	205 - 45
708-6	♦BEC	205 - 98
708-13	♦BEC	204 - 71
710-1(2)	♦BEC	204 - 40
710-2	♦BEC	204 - 43
710-3	♦BEC	204 - 42
711-1	♦BEC	204 - 39
711-6	♦BEC	204 - 74
730-6001	♦DIA	194 - 26
730-6002	♦DIA	201 - 77
730-6003	♦DIA	194 - 27
730-6004	♦DIA	194 - 18
730-6005	♦DIA	194 - 28
730-6007	♦DIA	201 - 78
730-6009	♦DIA	194 - 19
730-6010	♦DIA	194 - 20
730-6014	♦DIA	90 - 28
730-6016	♦DIA	90 - 29
730-6020	♦DIA	201 - 79
730-6023	♦DIA	197 - 11
730-6025	♦DIA	197 - 12
730-6029	♦DIA	201 - 80
730-6030	♦DIA	201 - 48
730-6031	DIA	201 - 81
737-1-1	♦BEC	212 - 51
737-1-2	♦BEC	212 - 52

TYPE No.	MFRS	Pg&Line
737-1-3	♦BEC	212 - 53
737-1-4	♦BEC	212 - 54
737-1-5	♦BEC	212 - 55
739-2-1	♦BEC	211 - 15
739-2-2	♦BEC	211 - 16
739-2-3	♦BEC	211 - 17
739-2-4	♦BEC	211 - 18
739-2-5	♦BEC	211 - 19
739-3-1	♦BEC	211 - 23
739-3-2	♦BEC	211 - 24
739-3-3	♦BEC	211 - 25
739-3-4	♦BEC	211 - 26
739-3-5	♦BEC	211 - 27
739-4-1	♦BEC	212 - 56
739-4-2	♦BEC	212 - 57
739-4-3	♦BEC	212 - 58
739-4-4	♦BEC	212 - 59
739-4-5	♦BEC	212 - 60
739-52-1	♦BEC	212 - 36
739-52-2	♦BEC	212 - 37
739-52-3	♦BEC	212 - 38
739-52-4	♦BEC	212 - 39
739-52-5	♦BEC	212 - 40
739-53-1	♦BEC	212 - 41
739-53-2	♦BEC	212 - 42
739-53-3	♦BEC	212 - 43
739-53-4	♦BEC	212 - 44
739-53-5	♦BEC	212 - 45
739-54-1	♦BEC	212 - 46
739-54-2	♦BEC	212 - 47
739-54-3	♦BEC	212 - 48
739-54-4	♦BEC	212 - 49
739-54-5	♦BEC	212 - 50
739-0261-601	♦DIA	194 - 76
739-0261-602	♦DIA	194 - 77
739-0361-601	♦DIA	194 - 97
739-0361-602	♦DIA	194 - 98
739-0461-601	♦DIA	195 - 92
739-0461-602	♦DIA	195 - 93
739-0561-601	♦DIA	196 - 38
739-0561-602	♦DIA	196 - 39
739-0661-601	♦DIA	196 - 40
739-0661-602	♦DIA	196 - 41
739-0761-601	♦DIA	196 - 42
739-0761-602	♦DIA	196 - 43
739-0861-601	♦DIA	196 - 45
739-0861-602	♦DIA	196 - 46
739-0961-601	♦DIA	196 - 47
739-0961-602	♦DIA	196 - 48
739-1061-601	♦DIA	196 - 49
739-1061-602	♦DIA	196 - 50
740-56-2-1	BEC	213 - 35
740-56-5-1	BEC	213 - 36
740-3006	♦DIA	201 - 64
740-3012	♦DIA	201 - 65
740-3014	♦DIA	201 - 66
741-3-1	♦BEC	206 - 34
741-3-2	♦BEC	206 - 35
741-3-3	♦BEC	206 - 36
741-3-4	♦BEC	206 - 37
741-3-5	♦BEC	206 - 38
741-4-1	♦BEC	206 - 49
741-4-2	♦BEC	206 - 50
741-4-3	♦BEC	206 - 51
741-4-4	♦BEC	206 - 52
741-4-5	BEC	206 - 53
742-58-2-1	BEC	213 - 61
742-58-5-1	BEC	213 - 62
745-0005	♦DIA	200 - 29
745-007	DIA	201 - 53
745-008	DIA	201 - 50
745-009	DIA	201 - 51
745-0017	♦DIA	179 - 5
745-0018	♦DIA	180 - 79
745-0019	♦DIA	43 -106
749-1501	♦DIA	201 - 67
749-1601	♦DIA	201 - 68
749-1701	♦DIA	201 - 69
749-1801	♦DIA	179 - 6
749-1901	♦DIA	200 - 30
749-2001	♦DIA	201 - 49
800PIN-RM	♦QTC	104 - 95
800PV-RM	♦QTC	108 - 70
802CPY	MULB	112 - 37
PHIN	RTCF	
	VALG	
825CPY	MULB	113 - 45
PHIN	RTCF	
	VALG	
830(1)	♦EII	124 - 52
831	♦EII	124 - 53
932(1)	♦MII	201 - 52
1101(1)	IRI	110 - 37
1102(1)	IRI	110 - 38
1103(1)	IRI	110 - 39
1104(1)	IRI	110 - 40
1105(1)	IRI	110 - 41
1106	IRI	110 - 42
1107	IRI	110 - 43
1108	IRI	110 - 44
1109	IRI	110 - 45
1110(2)	IRI	110 - 46
1111(2)	IRI	110 - 47
1112	IRI	110 - 48
1113(2)	IRI	110 - 49
1114	IRI	110 - 50
1115(2)	IRI	110 - 51
1121(2)	IRI	110 - 52
1201(2)	IRI	110 - 67
1202(1)	IRI	110 - 68
1203(1)	IRI	110 - 69
1204(2)	IRI	110 - 70
1205(2)	IRI	110 - 71
1206	IRI	110 - 72

TYPE No.	MFRS	Pg&Line
1207	IRI	110 - 73
1208	IRI	110 - 74
1209(2)	IRI	110 - 75
1210	IRI	110 - 76
1211	IRI	110 - 77
1212	IRI	110 - 78
1213(2)	IRI	110 - 79
1214	IRI	110 - 80
1215(2)	IRI	110 - 81
1221	IRI	110 - 82
1301(2)	IRI	110 - 98
	LWE	
1302(2)	IRI	110 - 99
	LWE	
1303(1)	IRI	110 -100
	LWE	
1304(1)	IRI	110 -101
	LWE	
1305(1)	IRI	110 -102
	LWE	
1306	IRI	110 -103
1307	IRI	110 -104
1308	IRI	110 -105
1309	IRI	110 -106
1310(3)	IRI	110 -107
	LWE	
1311(2)	IRI	111 - 1
	LWE	
1312(2)	IRI	111 - 2
	LWE	
1313(2)	IRI	111 - 3
	LWE	
1314	IRI	111 - 4
1315(2)	IRI	111 - 5
1319(2)	♦IRI	113 - 67
1319BB	♦IRI	113 - 68
1319M	♦IRI	113 - 69
1319MF	♦IRI	113 - 70
1321(2)	IRI	111 - 6
1416	IRI	111 - 23
1417	IRI	111 - 24
1517	IRI	111 - 25
1518(2)	IRI	111 - 26
1620(2)	♦IRI	112 - 85
1620BB	♦IRI	112 - 86
1620M	♦IRI	112 - 87
1620MF	♦IRI	112 - 88
2018.2	♦UCE	222 - 45
2020-29	♦UCE	222 - 46
2032	♦UCE	222 - 47
2050(2)	♦UCE	222 - 48
2050.2	♦UCE	222 - 49
2100(2)	♦UCE	222 - 50
2101(2)	IRI	110 - 53
2102(2)	IRI	110 - 54
2103(3)	IRI	110 - 55
2104(2)	IRI	110 - 56
2105(3)	IRI	110 - 57
2106	IRI	110 - 58
2107	IRI	110 - 59
2108(3)	IRI	110 - 60
2109	IRI	110 - 61
2112(1)	IRI	110 - 62
2113(1)	IRI	110 - 63
2114	IRI	110 - 64
2115(2)	IRI	110 - 65
2121(1)	IRI	110 - 66
2201(3)	IRI	110 - 83
2202(2)	IRI	110 - 84
2203(2)	IRI	110 - 85
2204(1)	IRI	110 - 86
2205	IRI	110 - 87
2206(1)	IRI	110 - 88
2207	IRI	110 - 89
2208(1)	IRI	110 - 90
2209(1)	IRI	110 - 91
2212	IRI	110 - 92
2213(1)	IRI	110 - 93
2214	IRI	110 - 94
2215(1)	IRI	110 - 95
2220-29	UCE	206 - 55
2221(1)	IRI	110 - 96
2301(2)	IRI	111 - 7
2302(2)	IRI	111 - 8
2303(2)	IRI	111 - 9
2304(2)	IRI	111 - 10
2305	IRI	111 - 11
2306	IRI	111 - 12
2307(2)	IRI	111 - 13
2308	IRI	111 - 14
2309	IRI	111 - 15
2312	IRI	111 - 16
2313	IRI	111 - 17
2314	IRI	111 - 18
2315	IRI	111 - 19
2321	IRI	111 - 20
2322-4	♦UCE	222 - 51
2416	IRI	111 - 27
2417	IRI	111 - 28
2517	IRI	111 - 29
2518	IRI	111 - 30
2600	♦UCE	222 - 52
2635	♦IRI	113 - 81
2637	♦IRI	113 - 82
2655	♦IRI	113 - 48
2657	♦IRI	113 - 49
2665	♦IRI	113 - 22
2667	♦IRI	113 - 23
2735	♦IRI	113 - 89
2737	♦IRI	113 - 90
2755	♦IRI	113 - 71
2757	♦IRI	113 - 72
2765	IRI	113 - 30
2767	IRI	113 - 31

Δ-Registered with JEDEC by this manufacturer

♦-Mfr's data sheet available in microfilm service

1. TYPE No. CROSS INDEX

IN TYPE NUMBER SEQUENCE

TYPE No.	MFRS	Pg&Line
2800(2)	♦IRI	99 - 72
2802(3)	♦IRI	99 - 74
2804(2)	♦IRI	99 - 75
2805(2)	♦IRI	99 - 76
2840	♦IRI	99 - 73
2842	♦IRI	99 - 77
2844	♦IRI	99 - 78
2845	♦IRI	99 - 79
3015FBM10	♦REA	225 - 75
3015FBM15	♦REA	225 - 76
3015FBM20	♦REA	225 - 77
3015FBM	♦REA	225 - 78
3015FBN10	♦REA	225 - 79
3015FBN15	♦REA	225 - 80
3015FBN20	♦REA	225 - 81
3015FBN	♦REA	225 - 82
3015G10	♦REA	225 - 83
3015G	♦REA	225 - 84
3102(1)	UCE	218 - 59
3103	UCE	218 - 58
3104	UCE	218 -105
3124	♦UCE	218 -106
3124-45	UCE	218 -107
3125(2)	UCE	219 - 17
3126	♦UCE	219 - 43
3135(2)	UCE	219 - 18
3202(2)	♦UCE	219 - 53
3203	UCE	219 - 62
3204	♦UCE	219 - 54
3205(2)	♦UCE	219 - 55
3206	UCE	219 - 56
3222	UCE	219 - 50
3233-9	♦UCE	219 - 63
3291	UCE	210 - 56
3306	♦UCE	219 - 68
3324-30	♦UCE	209 -109
3334(2)	UCE	206 -104
3344	♦UCE	219 - 64
3345	♦UCE	219 - 66
3353	UCE	206 - 76
3391	UCE	219 - 57
3402	♦UCE	204 - 50
3403	UCE	209 - 1
3414	UCE	204 - 52
3491	UCE	204 - 48
3510(2)	UCE	223 - 40
3600	UCE	211 - 20
3601(2)	♦UCE	205 - 97
3602	UCE	210 - 62
3603	UCE	207 - 85
3604(1)	♦UCE	211 - 60
3612-312	♦HAM	209 - 92
3614	♦UCE	211 - 61
3624-06	UCE	211 - 62
3624-16	UCE	211 - 63
3624-22	♦UCE	211 - 21
3624-23	UCE	209 - 93
3624-24	♦UCE	211 - 64
3624-25	♦UCE	212 - 35
3624-26	♦UCE	210 - 87
3624-27	♦UCE	211 - 65
3624-28	UCE	211 - 22
3626(1)	♦UCE	213 - 34
3627	UCE	214 - 63
3682	UCE	213 - 60
3703(2)	♦UCE	214 - 70
3736-8	UCE	217 - 37
3736-18	UCE	217 - 38
3804(3)	UCE	218 - 48
3812(2)	UCE	218 - 46
3812-1	♦UCE	218 - 47
3900-01	♦HAM	208 - 19
3900-05	♦HAM	208 - 20
3900-06	♦HAM	208 - 21
3901-01	♦HAM	212 - 94
3901-05	♦HAM	212 - 95
3901-06	♦HAM	212 - 96
3902-210	♦HAM	210 - 88
3902-312	♦HAM	210 - 89
3902-313	♦HAM	210 - 90
3903-01	♦HAM	216 - 9
3903-05	♦HAM	216 - 10
3903-06	♦HAM	216 - 11
3906-110	♦HAM	209 - 71
3906-210	♦HAM	211 - 82
3906-312	♦HAM	211 - 83
3906-313	♦HAM	211 - 84
3907-01	♦HAM	216 - 12
3907-05	♦HAM	216 - 13
3907-06	♦HAM	216 - 14
3908-01	♦HAM	219 - 8
3908-05	♦HAM	219 - 9
3908-06	♦HAM	219 - 10
3909-210	♦HAM	209 - 72
3909-312	♦HAM	209 - 73
3909-313	♦HAM	209 - 74
3912-01	♦HAM	218 - 55
3912-05	♦HAM	218 - 56
3912-06	♦HAM	218 - 57
3913-01	♦HAM	209 - 94
3913-05	♦HAM	209 - 95
3913-06	♦HAM	209 - 96
3915-01	♦HAM	216 -101
3915-05	♦HAM	216 -102
3915-06	♦HAM	216 -103
3918-110	♦HAM	213 - 40
3918-210	♦HAM	213 - 41
3918-312	♦HAM	213 - 42
3918-313	♦HAM	213 - 43
3919-01	♦HAM	216 - 15
3919-05	♦HAM	216 - 16
3919-06	♦HAM	216 - 17
3920-01	♦HAM	217 - 53
3920-05	♦HAM	217 - 54
3920-06	♦HAM	217 - 55
3922-01	♦HAM	212 - 97
3922-05	♦HAM	212 - 98
3922-06	♦HAM	212 - 99
3926-01	HAM	212 -100
3926-05	HAM	212 -101
3926-06	HAM	212 -102
3927-110	♦HAM	214 - 72
3927-210	♦HAM	214 - 73
3927-312	♦HAM	214 - 74
3927-313	♦HAM	214 - 75
3929-210	♦HAM	211 - 85
3929-312	♦HAM	211 - 86
3929-313	♦HAM	211 - 87
3930-210	♦HAM	210 - 91
3930-312	♦HAM	210 - 92
3930-313	♦HAM	210 - 93
3931-01	♦HAM	216 - 18
3931-05	HAM	216 - 19
3931-06	HAM	216 - 20
3935-01	♦HAM	212 -103
3935-05	♦HAM	212 -104
3935-06	♦HAM	212 -105
3937-01	♦HAM	208 - 22
3937-05	♦HAM	208 - 23
3937-06	♦HAM	208 - 24
3938-01	♦HAM	208 - 25
3938-05	♦HAM	208 - 26
3938-06	♦HAM	208 - 27
3939-01	♦HAM	217 - 2
3939-05	♦HAM	217 - 3
3939-06	♦HAM	217 - 4
3940-01	♦HAM	214 - 98
3940-05	♦HAM	207 - 92
3940-06	♦HAM	207 - 93
3947-210	♦HAM	220 - 7
3947-312	♦HAM	220 - 8
3947-313	♦HAM	220 - 9
3970-01	♦HAM	208 - 28
3970-05	♦HAM	208 - 29
3970-06	♦HAM	208 - 30
4000-2-001	♦LWE	49 -110
4000-2-002	♦LWE	50 - 1
4000-2-003	♦LWE	50 - 2
4000-2-004	♦LWE	50 - 3
4000-2-005	♦LWE	50 - 4
4000-2-006	♦LWE	50 - 5
4000-2-007	♦LWE	50 - 6
4000-2SERIES	♦LWE	53 - 98
4000-5-004	♦LWE	50 - 7
4000-5-005	♦LWE	50 - 8
4000-5-006	♦LWE	50 - 9
4000-5-007	♦LWE	50 - 10
4000-5SERIES	♦LWE	53 - 99
4003	♦IRI	112 - 89
4005(1)	♦IRI	112 - 47
4006	♦IRI	112 - 40
4007	♦IRI	112 - 38
4030-4SERIES	♦LWE	77 - 88
4030-5SERIES	♦LWE	77 - 89
4040-1SERIES	♦LWE	59 -100
4040-5SERIES	♦LWE	59 -101
4080(2)	IRI	110 - 33
4100-2SERIES	♦LWE	53 -100
4100-5SERIES	♦LWE	53 -101
4130-4SERIES	♦LWE	77 - 90
4130-5SERIES	♦LWE	77 - 91
4134(2)	♦UCE	220 - 50
4140-1SERIES	♦LWE	58 - 30
4140-5SERIES	♦LWE	58 - 31
4192	EII	158 - 67
	TPN	
4301(2)	♦UCE	220 - 57
4344	♦UCE	219 - 65
4345	♦UCE	219 - 67
4421	♦UCE	204 - 49
4572-01	♦HAM	212 -106
4572-05	♦HAM	212 -107
4572-06	♦HAM	212 -108
5035	♦IRI	112 - 90
5040(2)	♦UCE	222 - 53
5050-1001	♦KCC	125 - 87
5050-1002	♦KCC	125 - 88
5050-1003	♦KCC	125 - 89
5050-1004	♦KCC	125 - 90
5050-1005	♦KCC	125 - 91
5050-1006	♦KCC	125 - 92
5050-1007	♦KCC	125 - 93
5050-1008	♦KCC	125 - 94
5050-1011	♦KCC	125 - 95
5050-1012	♦KCC	125 - 96
5050-1013	♦KCC	125 - 97
5050-1014	♦KCC	125 - 98
5050-1015	♦KCC	125 - 99
5050-1016	♦KCC	125 -100
5050-1017	♦KCC	125 -101
5050-1018	♦KCC	125 -102
5050-1021	♦KCC	125 -103
5050-1022	♦KCC	125 -104
5050-1023	♦KCC	125 -105
5050-1024	♦KCC	126 - 1
5050-1025	♦KCC	126 - 2
5050-1026	♦KCC	126 - 3
5050-1027	♦KCC	126 - 4
5050-1028	♦KCC	126 - 5
5050-1031	♦KCC	126 - 6
5050-1032	♦KCC	126 - 7
5050-1033	♦KCC	126 - 8
5050-1034	♦KCC	126 - 9
5050-1035	♦KCC	126 - 10
5050-1036	♦KCC	126 - 11
5050-1037	♦KCC	126 - 12
5050-1038	♦KCC	126 - 13
5050-1041	♦KCC	126 - 14
5050-1042	♦KCC	126 - 15
5050-1043	♦KCC	126 - 16
5050-1044	♦KCC	126 - 17
5050-1045	♦KCC	126 - 18
5050-1046	♦KCC	126 - 19
5050-1047	♦KCC	126 - 20
5050-1048	♦KCC	126 - 21
5050-1051	♦KCC	126 - 22
5050-1052	♦KCC	126 - 23
5050-1053	♦KCC	126 - 24
5050-1054	♦KCC	126 - 25
5050-1055	♦KCC	126 - 26
5050-1056	♦KCC	126 - 27
5050-1057	♦KCC	126 - 28
5050-1058	♦KCC	126 - 29
5050-1061	♦KCC	126 - 30
5050-1062	♦KCC	126 - 31
5050-1063	♦KCC	126 - 32
5050-1064	♦KCC	126 - 33
5050-1065	♦KCC	126 - 34
5050-1066	♦KCC	126 - 35
5050-1067	♦KCC	126 - 36
5050-1068	♦KCC	126 - 37
5050-1071	KCC	126 - 38
5050-1072	♦KCC	126 - 39
5050-1073	♦KCC	126 - 40
5050-1074	♦KCC	126 - 41
5050-1075	♦KCC	126 - 42
5050-1076	♦KCC	126 - 43
5050-1077	♦KCC	126 - 44
5050-1078	♦KCC	126 - 45
5050-1081	♦KCC	126 - 46
5050-1082	♦KCC	126 - 47
5050-1083	♦KCC	126 - 48
5050-1084	♦KCC	126 - 49
5050-1085	♦KCC	126 - 50
5050-1086	♦KCC	126 - 51
5050-1087	♦KCC	126 - 52
5050-1088	♦KCC	126 - 53
5050-1091	♦KCC	126 - 54
5050-1092	♦KCC	126 - 55
5050-1093	♦KCC	126 - 56
5050-1094	♦KCC	126 - 57
5050-1095	♦KCC	126 - 58
5050-1096	♦KCC	126 - 59
5050-1097	♦KCC	126 - 60
5050-1098	♦KCC	126 - 61
5050-2001	♦KCC	126 - 62
5050-2002	♦KCC	126 - 63
5050-2003	♦KCC	126 - 64
5050-2004	♦KCC	126 - 65
5050-2005	♦KCC	126 - 66
5050-2006	♦KCC	126 - 67
5050-2007	♦KCC	126 - 68
5050-2008	♦KCC	126 - 69
5050-2011	♦KCC	126 - 70
5050-2012	♦KCC	126 - 71
5050-2013	♦KCC	126 - 72
5050-2014	♦KCC	126 - 73
5050-2015	♦KCC	126 - 74
5050-2016	♦KCC	126 - 75
5050-2017	♦KCC	126 - 76
5050-2018	♦KCC	126 - 77
5050-2021	♦KCC	126 - 78
5050-2022	♦KCC	126 - 79
5050-2023	♦KCC	126 - 80
5050-2024	♦KCC	126 - 81
5050-2025	♦KCC	126 - 82
5050-2026	♦KCC	126 - 83
5050-2027	♦KCC	126 - 84
5050-2028	♦KCC	126 - 85
5050-2031	♦KCC	126 - 86
5050-2032	♦KCC	126 - 87
5050-2033	♦KCC	126 - 88
5050-2034	♦KCC	126 - 89
5050-2035	♦KCC	126 - 90
5050-2036	♦KCC	126 - 91
5050-2037	♦KCC	126 - 92
5050-2038	♦KCC	126 - 93
5050-2041	♦KCC	126 - 94
5050-2042	♦KCC	126 - 95
5050-2043	♦KCC	126 - 96
5050-2044	♦KCC	126 - 97
5050-2045	♦KCC	126 - 98
5050-2046	♦KCC	126 - 99
5050-2047	♦KCC	126 -100
5050-2048	♦KCC	126 -101
5050-2051	♦KCC	126 -102
5050-2052	♦KCC	126 -103
5050-2053	♦KCC	126 -104
5050-2054	♦KCC	126 -105
5050-2055	♦KCC	126 -106
5050-2056	♦KCC	126 -107
5050-2057	♦KCC	126 -108
5050-2058	♦KCC	126 -109
5050-3001	♦KCC	127 - 33
5050-3002	♦KCC	127 - 34
5050-3003	♦KCC	127 - 13
5050-3004	♦KCC	127 - 14
5050-3011	♦KCC	127 - 35
5050-3012	♦KCC	127 - 36
5050-3013	♦KCC	127 - 15
5050-3014	♦KCC	127 - 16
5050-3021	♦KCC	127 - 37
5050-3022	♦KCC	127 - 38
5050-3023	♦KCC	127 - 17
5050-3024	♦KCC	127 - 18
5050-3031	♦KCC	127 - 39
5050-3032	♦KCC	127 - 40
5050-3033	♦KCC	127 - 19
5050-3034	♦KCC	127 - 20
5050-3041	♦KCC	127 - 41
5050-3042	♦KCC	127 - 42
5050-3043	♦KCC	127 - 21
5050-3044	♦KCC	127 - 22
5050-3051	♦KCC	127 - 43
5050-3052	♦KCC	127 - 44
5050-3053	♦KCC	127 - 23
5050-3054	♦KCC	127 - 24
5050-3061	KCC	127 - 45
5050-3062	KCC	127 - 46
5050-3063	KCC	127 - 25
5050-3064	KCC	127 - 26
5050-3071	KCC	127 - 47
5050-3072	KCC	127 - 48
5050-3073	KCC	127 - 27
5050-3074	KCC	127 - 28
5050-3081	KCC	127 - 49
5050-3082	KCC	127 - 50
5050-3083	KCC	127 - 29
5050-3084	KCC	127 - 30
5050-3091	KCC	127 - 51
5050-3092	KCC	127 - 52
5050-3093	KCC	127 - 31
5050-3094	KCC	127 - 32
5053R10	♦REC	49 - 31
5054-1R5	♦REC	49 -102
5054-1R10	♦REC	49 -103
5055	♦IRI	112 - 48
5061(2)	♦UCE	222 - 54
5065	♦IRI	112 - 41
5082-4203	♦HPA	104 - 81
5082-4204	♦HPA	104 - 80
5082-4205	♦HPA	106 - 6
5082-4207	♦HPA	104 - 82
5082-4220	♦HPA	104 - 59
5082-7100	♦HPA	202 -101
5082-7101	♦HPA	200 - 24
5082-7102	♦HPA	200 - 26
5082-7285	♦HPA	175 -106
5082-7295	♦HPA	175 -107
5082-7300	♦HPA	202 - 18
5082-7302	♦HPA	202 - 19
5082-7304	♦HPA	202 - 20
5082-7340	♦HPA	202 - 21
5082-7356	♦HPA	202 - 26
5082-7357	♦HPA	202 - 27
5082-7358	♦HPA	202 - 28
5082-7359	♦HPA	202 - 29
5082-7404	♦HPA	175 - 59
5082-7405	♦HPA	175 - 64
5082-7414	♦HPA	175 - 60
5082-7415	♦HPA	175 - 65
5082-7432	♦HPA	175 - 54
5082-7433	♦HPA	175 - 56
5082-7441	♦HPA	175 - 49
5082-7446	♦HPA	175 - 71
5082-7610	♦HPA	180 - 11
5082-7611	♦HPA	180 - 12
5082-7613	♦HPA	180 - 13
5082-7616	♦HPA	180 - 14
5082-7620	♦HPA	179 -101
5082-7621	♦HPA	179 -102
5082-7623	♦HPA	179 -103
5082-7626	♦HPA	179 -104
5082-7650	♦TFS	184 -100
5082-7651	♦TFS	184 -101
5082-7653	♦TFS	184 -102
5082-7656	♦FSC	184 - 76
	♦TFS	
5082-7660	♦TFS	184 - 90
5082-7661	♦TFS	184 - 91
5082-7663	♦TFS	184 - 92
5082-7666	♦TFS	184 - 93
5082-7670	♦TFS	184 - 94
5082-7671	♦TFS	184 - 95
5082-7673	♦TFS	184 - 96
5082-7676	♦FSC	184 - 73
	♦TFS	
5082-7730	♦HPA	178 - 84
5082-7731	♦HPA	178 - 85
5082-7736	♦HPA	178 - 86
5082-7740	♦HPA	177 - 76
5082-7750	♦HPA	185 - 7
	♦TFS	
5082-7751	♦HPA	185 - 8
	♦TFS	
5082-7756	♦FSC	184 - 72
♦HPA	♦TFS	
5082-7760	♦HPA	185 - 9
	♦TFS	
5136	REA	225 - 49
5152R5	♦REC	59 - 2
5152R10	♦REC	60 - 25
5153R5	♦REC	59 - 28
5153R10	♦REC	59 - 29
5154R5	♦REC	59 - 42
5154R10	♦REC	59 - 43
5192	EII	158 - 68
5201-5	♦CRS	219 - 51
5201-6	♦CRS	219 - 52
5201A5	♦CRS	220 - 55
5201A6	♦CRS	220 - 56
5210	♦EII	124 - 93
5252R5	♦REC	77 - 65
5252R10	♦REC	77 - 66
5253R5	♦REC	73 - 80
5253R10	♦REC	73 - 81
5254R5	♦REC	75 - 36
5254R10	♦REC	75 - 37
5301-5	♦CRS	219 - 58
5301-6	♦CRS	219 - 59
5301A5	♦CRS	220 - 58
5301A6	♦CRS	220 - 59
5352R5	♦REC	68 - 86
5352R10	♦REC	68 - 87
5353R5	♦REC	66 -104
5353R10	♦REC	66 -105
5354R5	♦REC	67 - 56
5354R10	♦REC	67 - 57
5371	UCE	221 - 94
5415	♦UCE	222 - 55
5415-2	♦UCE	222 - 56
5501(3)	♦DMC	231 - 70
5502(2)	♦UCE	222 - 57
5502(3)	♦DMC	231 - 71
5623	UCE	210 - 84
5626-31	♦UCE	221 - 59
5635	♦IRI	112 -104
5637	♦IRI	112 -105
5644	UCE	209 - 70
5655	♦IRI	112 - 65
5657(2)	IRI	112 - 66
5665	♦IRI	112 - 51
5667	IRI	112 - 52
5735	♦IRI	113 - 12
5737	IRI	113 - 13
5752R5	♦REC	54 - 68
5752R10	♦REC	54 - 69
5753R5	♦REC	52 - 61
5753R10	♦REC	52 - 62
5754R5	♦REC	52 - 95
5754R10	♦REC	52 - 96
5755	♦IRI	112 -102
5757	IRI	112 -103
5765	IRI	112 - 81
5767	IRI	112 - 82
5800(3)	♦IRI	99 - 49
5802	♦IRI	99 - 52
5804	♦IRI	99 - 53
5805(2)	♦IRI	99 - 54
5832	♦UCE	220 - 2
5832-32	UCE	221 - 60
5840	♦IRI	99 - 50
5842	♦IRI	99 - 55
5844	♦IRI	99 - 56
5845	IRI	99 - 57
6039-004-304G		235 - 30
	♦CHM	
6039-004-304R		235 - 31
	♦CHM	
6039-004-304Y		235 - 32
	♦CHM	
6039-005-304G		235 - 33
	♦CHM	
6039-005-304R		235 - 34
	♦CHM	
6039-005-304Y		235 - 35
	♦CHM	
6080-002-304	♦CHM	235 - 36
6080-004-304	♦CHM	235 - 37
6080-005-304	♦CHM	235 - 38
6081-900-304	♦CHM	235 - 39
6082-004-304	♦CHM	235 - 40
6082-005-304	♦CHM	235 - 41
6084-002-304	♦CHM	235 - 42
6084-004-304	♦CHM	235 - 43
6084-005-304	♦CHM	235 - 44
6086-002-304	♦CHM	235 - 45
6086-004-304	♦CHM	235 - 46
6086-005-304	♦CHM	235 - 47
6330-001-505A		235 - 48
	♦CHM	
6330-002-505R		235 - 49
	♦CHM	
6330-301-505A		235 - 50
	♦CHM	
6330-302-505R		235 - 51
	♦CHM	
6332-001-505A		235 - 52
	♦CHM	
6332-002-505R		235 - 53
	♦CHM	
6332-301-505A		235 - 54
	♦CHM	
6332-302-505R		235 - 55
	♦CHM	
6334-001-505A		235 - 56
	♦CHM	
6334-002-505R		235 - 57
	♦CHM	
6334-301-505A		235 - 58
	♦CHM	
6334-302-505R		235 - 59
	♦CHM	
6336-001-505A		235 - 60
	♦CHM	
6336-002-505R		235 - 61
	♦CHM	
6336-301-505A		235 - 62
	♦CHM	
6336-302-505R		235 - 63
	♦CHM	
6340-001-505A		235 - 64
	♦CHM	
6340-002-505R		235 - 65
	♦CHM	
6340-005-505G		76 - 52
	♦CHM	
6340-301-505A		235 - 66
	♦CHM	
6340-302-505R		235 - 67
	♦CHM	
6340-305-505G		76 - 53
	♦CHM	
6342-001-505A		235 - 68
	♦CHM	
6342-002-505R		235 - 69
	♦CHM	
6342-005-505G		76 - 54
	♦CHM	

Δ-Registered with JEDEC by this manufacturer

♦-Mfr's data sheet available in microfilm service

1. TYPE No. CROSS INDEX

IN TYPE NUMBER SEQUENCE

TYPE No.	MFRS	Pg&Line
6342-301-505A	♦CHM	235 - 70
6342-302-505R	♦CHM	235 - 71
6342-305-505G	♦CHM	76 - 55
6344-001-505A	♦CHM	235 - 72
6344-002-505R	♦CHM	235 - 73
6344-301-505A	♦CHM	235 - 74
6344-302-505R	♦CHM	235 - 75
6346-001-505A	♦CHM	235 - 76
6346-002-505R	♦CHM	235 - 77
6346-301-505A	♦CHM	235 - 78
6346-302-505R	♦CHM	235 - 79
6464	♦UCE	221 - 93
6496	♦UCE	219 - 72
6802	♦IRI	102 - 13
7310-5SERIES	♦LWE	78 -108
7311-5SERIES	♦LWE	78 -109
7330-5SERIES	♦LWE	78 -110
7331-5SERIES	♦LWE	79 - 1
7350-5SERIES	♦LWE	79 - 2
7351-5SERIES	♦LWE	79 - 3
7410-2SERIES	♦LWE	54 - 47
7410-5SERIES	♦LWE	54 - 48
7411-2SERIES	♦LWE	54 - 49
7411-5SERIES	♦LWE	54 - 50
7430-2SERIES	♦LWE	54 - 51
7430-5SERIES	♦LWE	54 - 52
7431-2SERIES	♦LWE	54 - 53
7431-5SERIES	♦LWE	54 - 54
7450-2SERIES	♦LWE	54 - 55
7450-5SERIES	♦LWE	54 - 56
7451-2SERIES	♦LWE	54 - 57
7451-5SERIES	♦LWE	54 - 58
7610-4SERIES	♦LWE	78 - 6
7610-5SERIES	♦LWE	78 - 7
7611-4SERIES	♦LWE	78 - 8
7611-5SERIES	♦LWE	78 - 9
7630-4SERIES	♦LWE	78 - 10
7630-5SERIES	♦LWE	78 - 11
7631-4SERIES	♦LWE	78 - 21
7631-5SERIES	♦LWE	78 - 22
7650-4SERIES	♦LWE	78 - 12
7650-5SERIES	♦LWE	78 - 13
7651-4SERIES	♦LWE	78 - 14
7651-5SERIES	♦LWE	78 - 15
7710-1SERIES	♦LWE	60 - 10
7710-5SERIES	♦LWE	60 - 11
7711-1SERIES	♦LWE	60 - 12
7711-5SERIES	♦LWE	60 - 13
7730-1SERIES	♦LWE	60 - 14
7730-5SERIES	♦LWE	60 - 15
7731-1SERIES	♦LWE	60 - 16
7731-5SERIES	♦LWE	60 - 17
7750-1SERIES	♦LWE	60 - 18
7750-5SERIES	♦LWE	60 - 19
7751-1SERIES	♦LWE	60 - 20
7751-5SERIES	♦LWE	60 - 21
8016	♦IRI	111 - 47
8016L	IRI	111 - 48
8035	♦IRI	111 - 49
8045	♦IRI	108 - 22
8058	♦IRI	111 - 50
8110(2)	♦IRI	111 - 51
8235	♦IRI	111 - 52
8245	♦IRI	107 - 75
8258	♦IRI	111 - 53
36316	UCE	214 - 20
40623(1)	♦EII	124 - 94
54216	♦UCE	220 - 28
56016	UCE	220 - 63
65025	REC	206 - 33
65025-3HX-XA	♦REC	206 - 39
65025-3HX-XC	♦REC	206 - 40
65025-3HX-XD	♦REC	206 - 41
65025-3HX-XM	♦REC	206 - 42
65025-3HX-XQ	♦REC	206 - 43
65025-4X-XA	♦REC	206 - 44
65025-4X-XC	♦REC	206 - 45
65025-4X-XD	♦REC	206 - 46
65025-4X-XM	♦REC	206 - 47
65025-4X-XQ	♦REC	206 - 48
65035-3HX-XA	♦REC	208 - 4
65035-3HX-XC	♦REC	208 - 5
65035-3HX-XD	♦REC	208 - 6
65035-3HX-XQ	♦REC	208 - 7
65035-4X-XA	♦REC	208 - 8
65035-4X-XC	♦REC	208 - 9
65035-4X-XD	♦REC	208 - 10
65035-4X-XM	♦REC	208 - 11
65035-4X-XQ	♦REC	208 - 12
65035-6X-XA	♦REC	208 - 37
65035-6X-XC	♦REC	208 - 38
65035-6X-XD	♦REC	208 - 39
65035-6X-XM	♦REC	208 - 40
65035-6X-XQ	♦REC	208 - 41
65040-4HX-XA	♦REC	210 - 1
65040-4HX-XC	♦REC	210 - 2
65040-4HX-XD	♦REC	210 - 3
65040-4HX-XM	♦REC	210 - 4
65040-4HX-XQ	♦REC	210 - 5
65050	REC	211 - 4
65050-2X-XA	♦REC	210 - 63
65050-2X-XC	♦REC	210 - 64
65050-2X-XD	♦REC	210 - 65
65050-2X-XM	♦REC	210 - 66
65050-2X-XQ	♦REC	210 - 67
65050-3HLX-XA	♦REC	212 - 7
65050-3HLX-XC	♦REC	212 - 8
65050-3HLX-XD	♦REC	212 - 9
65050-3HLX-XM	♦REC	212 - 10
65050-3HLX-XQ	♦REC	212 - 11
65050-3HX-XA	♦REC	212 - 12
65050-3HX-XC	♦REC	212 - 13
65050-3HX-XD	♦REC	212 - 14
65050-3HX-XM	♦REC	212 - 15
65050-3HX-XQ	♦REC	212 - 16
65050-4X-XA	♦REC	212 - 61
65050-4X-XC	♦REC	212 - 62
65050-4X-XD	♦REC	212 - 63
65050-4X-XM	♦REC	212 - 64
65050-4X-XQ	♦REC	212 - 65
65050-6X-XA	♦REC	213 - 54
65050-6X-XC	♦REC	213 - 55
65050-6X-XD	♦REC	213 - 56
65050-6X-XM	♦REC	213 - 57
65050-6X-XQ	♦REC	213 - 58
65050-8X-XA	♦REC	213 - 72
65050-8X-XC	♦REC	213 - 73
65050-8X-XD	♦REC	213 - 74
65050-8X-XM	♦REC	213 - 75
65050-8X-XQ	♦REC	213 - 76
65070-3HX-XA	♦REC	215 -103
65070-3HX-XC	♦REC	215 -104
65070-3HX-XD	♦REC	215 -105
65070-3HX-XM	♦REC	216 - 1
65070-3HX-XQ	♦REC	216 - 2
65070-4X-XA	♦REC	215 - 95
65070-4X-XC	♦REC	215 - 96
65070-4X-XD	♦REC	215 - 97
65070-4X-XM	♦REC	215 - 98
65070-4X-XQ	♦REC	215 - 99
65070-5X-XA	♦REC	216 - 81
65070-5X-XC	♦REC	216 - 82
65070-5X-XD	♦REC	216 - 83
65070-5X-XM	♦REC	216 - 84
65070-5X-XQ	♦REC	216 - 85
65070-6X-XA	♦REC	217 - 46
65070-6X-XC	♦REC	217 - 47
65070-6X-XD	♦REC	217 - 48
65070-6X-XM	♦REC	217 - 49
65070-6X-XQ	♦REC	217 - 50
85030-16X-XA	♦REC	221 - 36
85030-16X-XC	♦REC	221 - 37
85030-16X-XD	♦REC	221 - 38
85030-16X-XM	♦REC	221 - 39
85030-16X-XQ	♦REC	221 - 40
95030-32X-XA	♦REC	221 - 52
95030-32X-XC	♦REC	221 - 53
95030-32X-XD	♦REC	221 - 54
95030-32X-XM	♦REC	221 - 55
95030-32X-XQ	♦REC	221 - 56
8102801EC	♦HPA	173 - 99
8302401EC	♦HPA	173 - 87
A1(1)	SOL	143 - 98
A2	INRI	137 - 49
A3(1)	INRI	137 - 50
A3(2)	SOL	143 - 96
A5	INRI	137 - 57
A5M	INRI	138 - 26
A8	♦SOL	137 - 48
A10M(2)	INRI	138 - 28
A15	INRI	137 - 62
A15M	INRI	138 - 30
A30(2)	♦REC	137 - 52
	♦SOL	
A32	♦REC	178 - 57
A34(2)	♦REC	178 -110
A36(2)	♦REC	179 - 76
A36R	♦REC	179 - 77
A45(2)	♦SOL	137 - 55
A65-40-0400	♦RKW	227 - 9
A100U	BAR	110 - 97
A300(3)	♦REC	178 - 33
A303(2)	♦REC	180 - 60
A320	♦REC	178 - 58
A323(1)	♦REC	180 - 73
A340	♦REC	179 - 1
A343	♦REC	180 - 78
A360	♦REC	179 - 78
A360R	♦REC	179 - 79
A363	♦REC	180 - 95
A363R	♦REC	180 - 96
A500(3)	♦BAR	110 - 28
A600(3)	♦BAR	110 - 29
A2611-21	♦REC	198 - 45
A2611-23	♦REC	198 - 46
A2621-21	♦REC	198 - 58
A2621-23	♦REC	198 - 59
A2631-21	♦REC	198 - 49
A2631-23	♦REC	198 - 50
A2641-21	♦REC	198 - 73
A2641-23	♦REC	198 - 74
A2641R21	♦REC	198 - 75
A2641R23	♦REC	198 - 76
A4011-11	♦REC	183 - 36
A4012-11	♦REC	184 - 30
A4021-11	♦REC	183 - 61
A4022-11	♦REC	184 - 35
A4031-11	♦REC	183 - 79
A4032-11	♦REC	184 - 39
A4041-11	♦REC	183 -106
A4041R11	♦REC	183 -107
A4042-11	♦REC	184 - 51
A4042R11	♦REC	184 - 52
A4311-11	♦REC	184 - 97
A4321-11	♦REC	184 -103
A4331-11	♦REC	185 - 10
A4341-11	♦REC	185 - 76
A4341R11	♦REC	185 - 77
A5011-11	♦REC	187 - 42
A5011-13	♦REC	187 - 43
A5012-11	♦REC	188 - 56
A5012-12	♦REC	188 - 57
A5012-13	♦REC	188 - 58
A5021-11	♦REC	187 - 59
A5021-13	♦REC	187 - 60
A5022-11	♦REC	188 - 92
A5022-12	♦REC	188 - 93
A5022-13	♦REC	188 - 94
A5031-11	♦REC	187 - 51
A5031-13	♦REC	187 - 52
A5032-11	♦REC	188 - 75
A5032-12	♦REC	188 - 76
A5032-13	♦REC	188 - 77
A5041-11	♦REC	187 - 98
A5041-13	♦REC	187 - 99
A5041R11	♦REC	187 -100
A5041R13	♦REC	187 -101
A5042-11	♦REC	189 - 55
A5042-12	♦REC	189 - 56
A5042-13	♦REC	189 - 57
A5042R11	♦REC	189 - 58
A5042R12	♦REC	188 - 38
A5042R13	♦REC	189 - 59
A5611-11	♦REC	191 - 94
A5612-11	♦REC	192 - 65
A5612-12	♦REC	191 - 44
A5621-11	♦REC	192 - 7
A5622-11	♦REC	192 - 85
A5622-12	♦REC	191 - 59
A5631-11	♦REC	192 - 1
A5632-11	♦REC	192 - 81
A5632-12	♦REC	191 - 56
A5641-11	♦REC	192 - 42
A5641R11	♦REC	192 - 43
A5642-11	♦REC	192 -107
A5642-12	♦REC	191 - 76
A5642R11	♦REC	192 -108
A5642R12	♦REC	191 - 77
A6311-11	♦REC	196 - 53
A6311-21	♦REC	196 - 60
A6311-23	♦REC	196 - 61
A6321-11	♦REC	196 - 58
A6321-21	♦REC	196 - 68
A6321-23	♦REC	196 - 69
A6331-11	♦REC	196 - 55
A6331-21	♦REC	196 - 64
A6331-23	♦REC	196 - 65
A6341-11	♦REC	196 - 72
A6341-21	♦REC	196 - 78
A6341-23	♦REC	196 - 79
A6341R11	♦REC	196 - 73
A6341R21	♦REC	196 - 80
A6341R23	♦REC	196 - 81
A8011-11	♦REC	197 - 48
A8021-11	♦REC	197 - 58
A8031-11	♦REC	197 - 56
A8041-11	♦REC	197 - 86
A8041R11	♦REC	197 - 87
AA0014	♦STAJ	90 - 9
AA0015	♦STAJ	90 - 10
AA3665S	♦STAJ	57 -102
AA3668S	♦STAJ	59 -104
AA5562X	STAJ	58 - 92
AAA101	♦STAJ	199 - 84
AAA103	♦STAJ	199 - 85
AAG101	♦STAJ	199 - 80
AAG103	♦STAJ	199 - 81
AAR101	♦STAJ	199 - 92
AAR103	♦STAJ	199 - 93
AAY101	♦STAJ	199 - 86
AAY103	♦STAJ	199 - 87
AD1000(2)	MITJ	99 - 4
ADD3401	♦LTN	181 - 60
ADD5401	♦LTN	190 - 28
ADD5402	♦LTN	190 - 29
ADD5405	♦LTN	190 - 30
ADD5406	♦LTN	190 - 31
ADD6401	♦LTN	196 - 37
AKA101	♦STAJ	199 - 88
AKA103	♦STAJ	199 - 89
AKG101	♦STAJ	199 - 82
AKG103	♦STAJ	199 - 83
AKR101	♦STAJ	199 - 94
AKR103	♦STAJ	199 - 95
AKY101	♦STAJ	199 - 90
AKY103	♦STAJ	199 - 91
AL1KL3	♦KODC	87 -100
AL1KL5	♦KODC	87 - 58
AL102A	USSR	40 - 29
AL102B	USSR	40 - 32
AL102V	USSR	78 - 67
AL103A	USSR	83 - 67
AL103B	USSR	82 -109
AL106A	USSR	82 - 23
AL106B	USSR	82 - 57
AL106V	USSR	83 - 2
AL107A	USSR	86 - 14
AL107B	USSR	86 - 78
AL109A	USSR	82 - 12
AL112A	USSR	55 - 55
AL112B	USSR	55 - 53
AL112D	USSR	55 - 49
AL112E	USSR	55 - 56
AL112G	USSR	55 - 52
AL112I	USSR	55 - 50
AL112SZ	USSR	55 - 54
AL112V	USSR	55 - 51
AL113A	USSR	175 - 16
AL113B	USSR	175 - 17
AL113D	USSR	175 - 18
AL113E	USSR	175 - 19
AL113G	USSR	175 - 20
AL113I	USSR	175 - 21
AL113K	USSR	175 - 10
AL113L	USSR	175 - 11
AL113M	USSR	175 - 12
AL113N	USSR	175 - 13
AL113R	USSR	175 - 14
AL113S	USSR	175 - 15
AL113SZ	USSR	175 - 22
AL113V	USSR	175 - 23
AL304A	USSR	175 - 73
AL304B	USSR	175 - 74
AL304G	USSR	175 - 75
AL304V	USSR	175 - 76
AL307	USSR	44 - 45
AL309A	USSR	176 -102
AL309B	USSR	176 - 99
AL309D	USSR	176 -103
AL309E	USSR	176 -100
AL309G	USSR	176 -105
AL309I	USSR	176 -101
AL309K	USSR	176 - 98
AL309SZ	USSR	176 -104
AL309V	USSR	176 -106
ALS311A	USSR	175 - 80
ALS311B	USSR	175 - 78
ALS311G	USSR	175 - 77
ALS311V	USSR	175 - 79
ALS313A5	USSR	175 - 25
ALS314A	♦USSR	175 - 26
ALS321A	♦USSR	176 -109
ALS321B	♦USSR	176 -110
ALS322A5	♦USSR	175 - 28
ALS323A5	♦USSR	175 - 27
ALS324A	♦USSR	178 - 34
ALS324B	♦USSR	178 - 35
ALS328A	♦USSR	175 - 41
ALS328B	♦USSR	175 - 42
ALS328G	♦USSR	175 - 97
ALS328V	♦USSR	175 - 98
ALS329A	♦USSR	175 - 34
ALS329B	♦USSR	175 - 35
ALS329D	♦USSR	175 - 36
ALS329E	♦USSR	175 - 37
ALS329G	♦USSR	175 - 38
ALS329I	♦USSR	175 - 94
ALS329K	♦USSR	175 - 95
ALS329L	♦USSR	186 - 64
ALS329M	♦USSR	186 - 65
ALS329N	♦USSR	186 - 66
ALS329S	♦USSR	175 - 96
ALS329V	♦USSR	175 - 39
ALS330A	♦USSR	175 - 89
ALS330B	♦USSR	175 - 90
ALS330D	♦USSR	175 - 91
ALS330E	♦USSR	175 - 92
ALS330G	♦USSR	175 - 93
ALS330I	♦USSR	176 - 3
ALS330K	♦USSR	176 - 4
ALS330S	♦USSR	176 - 5
ALS330V	♦USSR	186 - 63
ALS333A	♦USSR	187 - 34
ALS333B	♦USSR	187 - 35
ALS333G	♦USSR	187 - 28
ALS333V	♦USSR	187 - 29
ALS334A	♦USSR	187 - 36
ALS334B	♦USSR	187 - 37
ALS334G	♦USSR	187 - 30
ALS334V	♦USSR	187 - 31
ALS335A	♦USSR	187 - 38
ALS335B	♦USSR	187 - 39
ALS335G	♦USSR	187 - 32
ALS335V	♦USSR	187 - 33
ALS338A	♦USSR	178 - 36
ALS338B	♦USSR	178 - 37
ALS339A	♦USSR	175 - 24
AN3	MII	175 - 33
AN304(2)	♦STAJ	86 - 60
AN305(2)	♦STAJ	86 - 37
AND101R	♦AND	40 - 97
AND101RG	♦AND	78 - 77
AND102G	♦AND	69 - 44
AND102R	♦AND	40 - 72
AND105RK	♦AND	43 - 45
AND108G	♦AND	69 - 49
AND108GKB	♦AND	69 - 48
AND108R	♦AND	40 - 96
AND109R	♦AND	40 - 73
AND113G	♦AND	75 - 59
AND113R	♦AND	43 - 49
AND113S	AND	52 - 15
AND113Y	♦AND	63 - 44
AND114G	♦AND	71 - 90
AND114R	♦AND	42 - 79
AND114S	AND	50 - 88
AND114Y	♦AND	62 - 77
AND115G	♦AND	75 - 54
AND115R	♦AND	43 - 43
AND116R	♦AND	42 - 80
AND120R	♦AND	43 - 50
AND121G	♦AND	70 - 86
AND121R	♦AND	40 - 62
AND122G	♦AND	70 - 87
AND122R	♦AND	40 - 63
AND123G	♦AND	69 -109
AND123R	♦AND	44 - 9
AND123S	AND	52 - 43
AND123Y	♦AND	61 -106
AND124G	♦AND	69 - 50
AND124R	♦AND	42 -107
AND124S	AND	51 - 56
AND124Y	♦AND	61 - 50
AND205G	♦AND	70 - 80
AND205R	♦AND	42 - 76
AND205Y	♦AND	61 - 34
AND206G	♦AND	70 - 78
AND206R	♦AND	42 - 74
AND206Y	♦AND	61 - 83
AND207G	♦AND	70 - 84
AND207R	♦AND	41 - 93
AND207Y	♦AND	61 - 84
AND208G	♦AND	70 - 81
AND208R	♦AND	41 - 90
AND208Y	♦AND	61 - 35
AND226G	♦AND	69 - 51
AND226R	♦AND	40 - 90
AND226Y	♦AND	60 - 65
AND324G	♦AND	186 - 69
AND324R	AND	186 - 70
AND325G	♦AND	186 - 71
AND325R	AND	186 - 72
AND326G	♦AND	186 - 83
AND326R	AND	186 - 84
AND327G	♦AND	186 - 85
AND327R	AND	186 - 86
AND352G	AND	186 - 67
AND352R	♦AND	187 - 22
AND353G	AND	186 - 68
AND353R	♦AND	187 - 23
AND370G	♦AND	187 - 20
AND370R	♦AND	199 - 42
AND371G	♦AND	187 - 21
AND371R	♦AND	199 - 43
AND651	♦AND	221 - 9
AND740G	♦AND	74 - 5
AND740H	♦AND	49 - 11
AND740O	♦AND	57 -104
AND740P	♦AND	74 - 6
AND740R	♦AND	45 - 96
AND740Y	♦AND	64 - 74
AND743A	♦AND	57 -105
AND743G	♦AND	74 - 7
AND743H	♦AND	49 - 12
AND743O	♦AND	57 -106
AND743P	♦AND	74 - 8
AND743R	♦AND	45 - 97
AND743Y	♦AND	64 - 75
AND744A	♦AND	57 -107
AND744G	♦AND	74 - 9
AND744H	♦AND	49 - 13
AND744O	♦AND	57 -108
AND744P	♦AND	74 - 10
AND744R	♦AND	45 - 98
AND744Y	♦AND	64 - 76
AND746A	♦AND	57 -109
AND746G	♦AND	74 - 11
AND746H	♦AND	49 - 14
AND746O	♦AND	57 -110
AND746P	♦AND	74 - 12
AND746R	♦AND	45 - 99
AND746Y	♦AND	64 - 77
AND748H	♦AND	49 - 15
AND750A	♦AND	58 - 3
AND750G	♦AND	74 - 14
AND750H	♦AND	49 - 22
AND750O	♦AND	58 - 4
AND750P	♦AND	74 - 15
AND750R	♦AND	45 -103
AND750Y	♦AND	64 - 81
AND753A	♦AND	58 - 5
AND753G	♦AND	74 - 16
AND753H	♦AND	49 - 23
AND753O	♦AND	58 - 6
AND753P	♦AND	74 - 17
AND753R	♦AND	45 -104
AND753Y	♦AND	64 - 82
AND754A	♦AND	58 - 7
AND754G	♦AND	74 - 18
AND754H	♦AND	49 - 24
AND754O	♦AND	58 - 8
AND754P	♦AND	74 - 19
AND754R	♦AND	45 -105
AND754Y	♦AND	64 - 83
AND756A	♦AND	58 - 9
AND1230	♦AND	56 - 16
AND1240	♦AND	55 - 92
AND1811	♦AND	220 - 66
AND1861	♦AND	220 - 67
AND3005GAL	♦AND	177 - 92
AND3005GCL	♦AND	177 - 93
AND3005HAL	♦AND	177 -104
AND3005HCL	♦AND	177 -105
AND3005OAL	♦AND	178 - 3
AND3005OCL	♦AND	178 - 4
AND3005RAL	♦AND	177 -106
AND3005RCL	♦AND	177 -107
AND3005YAL	♦AND	178 - 5
AND3005YCL	♦AND	178 - 6
AND3010GAL	♦AND	178 - 97
AND3010GCL	♦AND	178 - 98
AND3010HAL	♦AND	179 - 24
AND3010HCL	♦AND	179 - 25
AND3010OAL	♦AND	179 - 45
AND3010OCL	♦AND	179 - 46
AND3010RAL	♦AND	179 - 26
AND3010RCL	♦AND	179 - 27
AND3010YAL	♦AND	179 - 47
AND3010YCL	♦AND	179 - 48
AND3020GAL	♦AND	180 - 76
AND3020GCL	♦AND	180 - 77
AND3020HAL	♦AND	180 - 85
AND3020HCL	♦AND	180 - 86
AND3020OAL	♦AND	180 - 91

Δ-Registered with JEDEC by this manufacturer

♦-Mfr's data sheet available in microfilm service

1. TYPE No. CROSS INDEX

IN TYPE NUMBER SEQUENCE

TYPE No.	MFRS	Pg&Line
AND3020OCL	♦AND	180 - 92
AND3020RAL	♦AND	180 - 87
AND3020RCL	♦AND	180 - 88
AND3020YAL	♦AND	180 - 93
AND3020YCL	♦AND	180 - 94
AND4115R	♦AND	182 - 5
AND4125R	♦AND	182 - 6
AND4135G	AND	176 - 69
AND4135R	♦AND	176 - 70
AND4145G	AND	176 - 71
AND4145R	♦AND	176 - 72
AND4305GAL	♦AND	185 - 11
AND4305GCL	♦AND	185 - 12
AND4305HAL	♦AND	185 - 43
AND4305HCL	♦AND	185 - 44
AND4305OAL	♦AND	185 - 51
AND4305OCL	♦AND	185 - 52
AND4305RAL	♦AND	185 - 45
AND4305RCL	♦AND	185 - 46
AND4305YAL	♦AND	185 - 53
AND4305YCL	♦AND	185 - 54
AND4310GAL	♦AND	185 - 13
AND4310GCL	♦AND	185 - 14
AND4310HAL	♦AND	185 - 47
AND4310HCL	♦AND	185 - 48
AND4310OAL	♦AND	185 - 15
AND4310OCL	♦AND	185 - 55
AND4310RAL	♦AND	185 - 49
AND4310RCL	♦AND	185 - 50
AND4310YAL	♦AND	185 - 56
AND4310YCL	♦AND	185 - 57
AND5005GAL	♦AND	187 - 53
AND5005GCL	♦AND	187 - 54
AND5005HAL	♦AND	187 - 66
AND5005HCL	♦AND	187 - 67
AND5005OAL	♦AND	187 - 79
AND5005OCL	♦AND	187 - 80
AND5005RAL	♦AND	187 - 68
AND5005RCL	♦AND	187 - 69
AND5005YAL	♦AND	187 - 81
AND5005YCL	♦AND	187 - 82
AND5010GAL	♦AND	187 - 55
AND5010GCL	♦AND	187 - 56
AND5010HAL	♦AND	187 - 70
AND5010HCL	♦AND	187 - 71
AND5010OAL	♦AND	187 - 83
AND5010OCL	♦AND	187 - 84
AND5010RAL	♦AND	187 - 72
AND5010RCL	♦AND	187 - 73
AND5010YAL	♦AND	187 - 85
AND5010YCL	♦AND	187 - 86
AND5015GAL1	♦AND	188 - 78
AND5015GAL	♦AND	188 - 79
AND5015GCL1	♦AND	188 - 80
AND5015GCL	♦AND	188 - 81
AND5015HAL1	♦AND	188 -108
AND5015HAL	♦AND	188 -109
AND5015HCL1	♦AND	188 -110
AND5015HCL	♦AND	189 - 1
AND5015OAL1	♦AND	189 - 18
AND5015OAL	♦AND	189 - 19
AND5015OCL1	♦AND	189 - 20
AND5015OCL	♦AND	189 - 21
AND5015RAL1	♦AND	189 - 2
AND5015RAL	♦AND	189 - 3
AND5015RCL1	♦AND	189 - 4
AND5015RCL	♦AND	189 - 5
AND5015YAL1	♦AND	189 - 22
AND5015YAL	♦AND	189 - 23
AND5015YCL1	♦AND	189 - 24
AND5015YCL	♦AND	189 - 25
AND5020GAL1	♦AND	188 - 82
AND5020GAL	♦AND	188 - 83
AND5020GCL1	♦AND	188 - 84
AND5020GCL	♦AND	188 - 85
AND5020HAL1	♦AND	189 - 6
AND5020HAL	♦AND	189 - 7
AND5020HCL1	♦AND	189 - 8
AND5020HCL	♦AND	189 - 9
AND5020OAL1	♦AND	189 - 26
AND5020OAL	♦AND	189 - 27
AND5020OCL1	♦AND	189 - 28
AND5020OCL	♦AND	189 - 29
AND5020RAL1	♦AND	189 - 10
AND5020RAL	♦AND	189 - 11
AND5020RCL1	♦AND	189 - 12
AND5020RCL	♦AND	189 - 13
AND5020YAL1	♦AND	189 - 30
AND5020YAL	♦AND	189 - 31
AND5020YCL1	♦AND	189 - 32
AND5020YCL	♦AND	189 - 33
AND8101G	♦AND	94 - 6
AND8101R	♦AND	94 - 5
AOF1050	♦MAI	231 - 72
AOF1052	♦MAI	231 - 73
AOF1300	♦MAI	231 - 74
AP4010	♦AOI	105 - 89
AP4025	♦AOI	105 - 91
AP4075	♦AOI	105 -100
AP4100	♦AOI	105 -104
AR04502	DPI	224 - 31
AR09450	DPI	224 - 27
AR11450	DPI	224 - 29
ARO7700	♦DPI	224 - 93
AS03250	DPI	224 - 9
AS7002	♦AOI	105 - 54
AS7005	♦AOI	105 - 56
AS7010	♦AOI	105 - 61
AS7025	♦AOI	105 - 66
AS7050	♦AOI	105 - 70
AS7075	♦AOI	105 - 74
AS7100	♦AOI	105 - 79
AS10400	DPI	224 - 28
ASEC50	ASE	106 - 3

TYPE No.	MFRS	Pg&Line
AX65R2F	♦CENB	111 - 58
AY2651K	♦STAJ	63 - 65
AY3665S	♦STAJ	64 - 69
AY3668S	♦STAJ	68 - 16
AY5562X	STAJ	66 - 40
B2(3)	SOL	143 - 97
B4(1)	INRI	137 - 56
B4(3)	SOL	143 - 95
B5(1)	INRI	137 - 58
B5(2)	SOL	143 - 99
B10(2)	INRI	137 - 59
B10M	INRI	138 - 27
B17	INRI	137 - 60
B20	INRI	137 - 61
B26X13.5	♦SOL	137 - 51
B37X29	♦SOL	137 - 54
B38X18	♦SOL	137 - 53
B1720-01	♦HPKJ	137 - 14
B1818	♦HPKJ	137 - 12
B1818-01	♦HPKJ	137 - 11
B1918	♦HPKJ	137 - 16
B1918-01	♦HPKJ	137 - 15
B1919	♦HPKJ	137 - 18
B1919-01	♦HPKJ	137 - 17
B2034	♦HPKJ	137 - 13
BG0014	♦STAJ	90 - 21
BG0015	♦STAJ	90 - 22
BG3665S	♦STAJ	71 - 6
BG3668S	♦STAJ	77 - 45
BG5562X	STAJ	71 -110
BL1ML3	♦KODC	52 - 56
BN101	♦STAJ	81 - 30
BN201	♦STAJ	81 - 31
BN302	♦STAJ	81 - 32
BN401	♦STAJ	81 - 33
BN501	♦STAJ	81 - 34
BN503	♦STAJ	81 - 35
BN504	♦STAJ	81 - 36
BP2BC	♦KODC	109 - 43
BP5BC	♦KODC	109 - 44
BP103-II	♦SIEG	115 - 61
	♦SIEX	
BP103-III	♦SIEG	118 - 1
	♦SIEX	
BP103-IV	♦SIEG	118 - 60
	♦SIEX	
BP103B2	♦SIEX	118 - 58
BP103B3	♦SIEX	119 - 6
BP103B4	♦SIEX	119 - 42
BP103B-II	♦SIEG	119 - 93
BP103B-III	♦SIEG	120 - 11
BP103B-IV	♦SIEG	120 - 22
BP104	♦ALGG	106 - 5
♦SIEG	♦SIEX	
BPF11	♦MULB	106 - 28
♦PHIN	♦RTCF	
	♦VALG	
BPF24(A)	♦APX	103 - 47
♦MULB	♦PHIN	
♦RTCF	♦VALG	
BPW13A	♦ALGG	115 -104
BPW13B	♦ALGG	116 - 11
BPW13C	♦ALGG	116 - 90
BPW14A	♦ALGG	118 - 42
BPW14B	♦ALGG	118 - 82
BPW14C	♦ALGG	119 - 24
BPW20	♦ALGG	138 - 38
BPW21	♦ALGG	108 - 3
♦CENB	RSCB	
♦SIEG	♦SIEX	
BPW21M	♦ALGG	137 -108
BPW22A1	♦APX	117 - 92
♦MULB	♦PHIN	
♦RTCF	VALG	
BPW22A2	♦APX	119 - 14
♦MULB	♦PHIN	
♦RTCF	VALG	
BPW24	♦ALGG	105 - 8
BPW28(A)	♦ALGG	99 - 6
BPW32	♦SIEG	108 - 20
	♦SIEX	
BPW33	♦SIEG	108 - 19
	♦SIEX	
BPW34	♦ALGG	105 - 88
MULB	PHIN	
RTCF	♦SIEG	
♦SIEX	VALG	
BPW34B	♦SIEG	105 - 82
	SIEX	
BPW34F	♦SIEG	105 - 83
	♦SIEX	
BPW35	♦ALGG	143 -103
BPW36	♦GESY	119 - 39
BPW37	♦GESY	118 - 76
BPW38	♦GESY	121 - 84
BPW39A	♦ALGG	115 - 78
	♦GIC	
BPW39B	♦ALGG	116 - 19
BPW40(A)	♦ALGG	117 - 25
BPW41(A)	♦ALGG	103 - 58
BPW41D	♦FERB	110 - 32
BPW41N	♦ALGG	103 - 59
BPW42	♦ALGG	116 - 36
BPW43	♦ALGG	103 - 53
BPW44	♦MULB	104 - 63
♦PHIN	♦RTCF	
	VALG	
BPW45	♦MULB	104 - 64
♦PHIN	♦RTCF	
	♦VALG	
BPW46	♦ALGG	103 - 60
BPW50	♦APX	103 - 42
♦MULB	♦PHIN	
RTCF	VALG	

TYPE No.	MFRS	Pg&Line
BPW71	MULB	119 -103
PHIN	RTCF	
	VALG	
BPW76A	♦ALGG	116 - 20
BPW76B	♦ALGG	116 - 92
BPW77A	♦ALGG	119 - 82
BPW77B	♦ALGG	119 - 64
BPW78	♦ALGG	117 - 22
BPW79	♦ALGG	99 - 10
BPW80	♦ALGG	106 - 79
BPW81	♦ALGG	106 - 80
BPW82	♦ALGG	103 - 61
BPW83	♦ALGG	103 - 62
BPW84	♦ALGG	103 - 63
BPW85	♦ALGG	117 - 3
BPW86	♦ALGG	105 - 57
BPW87	♦ALGG	104 - 56
BPW88	♦ALGG	105 - 58
BPW89	♦ALGG	104 - 57
BPW96A	♦ALGG	119 - 10
BPW96B	♦ALGG	119 - 65
BPW96C	♦ALGG	119 -104
BPX25	♦APX	119 - 7
♦FERB	♦MULB	
♦PHIN	♦RTCF	
	VALG	
BPX29	APX	115 -105
♦FERB	♦MULB	
♦PHIN	♦RTCF	
	VALG	
BPX38-II	♦SIEG	116 -100
	♦SIEX	
BPX38-III	♦SIEG	117 - 75
	♦SIEX	
BPX38-IV	♦SIEG	117 -108
	♦SIEX	
BPX38I	♦SIEX	117 -105
BPX40	♦APX	137 - 21
♦MULB	♦PHIN	
♦RTCF	♦VALG	
BPX41	APX	137 - 22
♦MULB	♦PHIN	
RTCF	♦VALG	
BPX42	♦APX	137 - 23
♦MULB	♦PHIN	
♦RTCF	♦VALG	
BPX43-2	♦SIEG	118 - 59
	SIEX	
BPX43-II	♦SIEX	119 -102
BPX43-III	♦SIEG	119 - 8
	♦SIEX	
BPX43-IV	♦SIEG	119 - 43
	♦SIEX	
BPX47A	MULB	147 - 35
PHIN	RTCF	
	VALG	
BPX47B18	MULB	144 - 89
PHIN	RTCF	
	VALG	
BPX47B20	MULB	144 - 94
PHIN	RTCF	
	VALG	
BPX47C36	PHIN	144 -104
RTCF	VALG	
BPX48	♦SIEG	128 - 17
	♦SIEX	
BPX60	♦SIEG	108 - 52
	♦SIEX	
BPX61	MULB	106 - 78
PHIN	RTCF	
♦SIEG	♦SIEX	
	VALG	
BPX61P	♦MULB	107 - 50
♦PHIN	♦RTCF	
	VALG	
BPX63	♦CENB	107 - 41
♦SIEG	♦SIEX	
BPX65	♦CENB	105 - 59
♦SIEG	♦SIEX	
BPX66	♦CENB	103 - 85
♦SIEG	♦SIEX	
BPX66P(1)	MULB	123 - 4
PHIN	RTCF	
	VALG	
BPX71	♦APX	116 - 37
♦MULB	♦PHIN	
♦RTCF	VALG	
BPX71-203	♦APX	118 -105
♦MULB	♦PHIN	
♦RTCF	♦VALG	
BPX71-204	♦APX	119 - 55
♦MULB	♦PHIN	
♦RTCF	♦VALG	
BPX72	♦APX	116 - 38
♦MULB	♦PHIN	
♦RTCF	VALG	
BPX72D	♦APX	117 - 12
♦MULB	♦PHIN	
RTCF	♦VALG	
BPX72E	♦APX	117 - 88
♦MULB	♦PHIN	
RTCF	♦VALG	
BPX72F	♦MULB	118 - 45
♦PHIN	♦RTCF	
	♦VALG	
BPX79	♦SIEG	138 - 29
	♦SIEX	
BPX80	♦SIEG	129 - 51
	♦SIEX	
BPX81-II	♦SIEG	117 - 73
	♦SIEX	
BPX81-III	♦SIEG	117 -106
	♦SIEX	

TYPE No.	MFRS	Pg&Line
BPX81-IV	♦SIEG	118 - 57
	♦SIEX	
BPX82	♦SIEG	129 - 29
	♦SIEX	
BPX83	♦SIEG	129 - 31
	♦SIEX	
BPX84	♦SIEG	129 - 33
	♦SIEX	
BPX85	♦SIEG	129 - 35
	♦SIEX	
BPX86	♦SIEG	129 - 36
	♦SIEX	
BPX87	♦SIEG	129 - 38
	♦SIEX	
BPX88	♦SIEG	129 - 39
	♦SIEX	
BPX89A	♦PHIN	129 - 50
♦SIEG	♦SIEX	
BPX90	♦SIEG	107 - 46
	♦SIEX	
BPX90K	♦SIEX	103 - 83
BPX91B	♦SIEG	108 - 21
	♦SIEX	
BPX92	♦SIEG	108 - 47
	♦SIEX	
BPX93	♦SIEG	108 - 43
BPX94	♦MULB	108 - 23
♦PHIN	♦RTCF	
	♦VALG	
BPX95C1	♦APX	118 - 62
♦MULB	♦PHIN	
RTCF	♦VALG	
BPX95C2	♦APX	119 - 81
♦MULB	♦PHIN	
RTCF	♦VALG	
BPX95C	♦APX	115 - 28
♦MULB	♦PHIN	
♦RTCF	VALG	
BPX98	♦MULB	107 - 32
♦PHIN	♦RTCF	
	♦VALG	
BPX99	♦ALGG	121 - 95
BPY11P4	♦SIEG	137 - 92
	♦SIEX	
BPY11P5	♦SIEG	137 - 91
	♦SIEX	
BPY62-2	♦SIEG	120 - 37
	♦SIEX	
BPY62-3	♦SIEG	118 - 83
	♦SIEX	
BPY62-4	♦SIEG	119 - 25
	♦SIEX	
BPY63P	SIEX	138 -109
BPY64P	♦SIEG	137 -110
	♦SIEX	
BR0014	♦STAJ	90 - 1
BR0015	♦STAJ	90 - 2
BR3665S	♦STAJ	49 - 7
BR3668S	♦STAJ	54 - 71
BR5562X	STAJ	52 - 21
BS100C	♦SRPJ	106 -108
BS100D	♦SRPJ	106 -110
BS112	♦SRPJ	107 - 49
BS142	♦SRPJ	107 - 53
BS500A	SRPJ	107 - 1
BS500B	SRPJ	106 -109
BS530UV	♦SRPJ	107 - 55
BU198A	♦STAJ	90 - 47
BU198G	♦STAJ	90 - 68
BU198R	♦STAJ	90 - 30
BU198Y	♦STAJ	90 - 54
BU227A	♦STAJ	89 - 70
BU227G	♦STAJ	89 - 88
BU227R	♦STAJ	89 - 56
BU227Y	♦STAJ	89 - 77
BU443R	♦STAJ	90 - 31
BU4274-2AA	♦STAJ	199 - 98
BU4274-2AK	STAJ	199 - 99
BU4274-2GA	♦STAJ	199 - 96
BU4274-2GK	STAJ	199 - 97
BU4274-2RA	♦STAJ	199 -102
BU4274-2RK	STAJ	199 -103
BU4274-2YA	♦STAJ	199 -100
BU4274-2YK	STAJ	199 -101
C31	♦REC	178 - 38
C33	♦REC	180 - 53
C35	♦REC	179 - 2
C37	♦REC	179 - 80
C37R	♦REC	179 - 81
C313	♦REC	184 - 29
C333	♦REC	184 - 36
C353	♦REC	184 - 40
C373	♦REC	180 - 97
C373R	♦REC	184 - 53
C533A5	♦CRS	206 - 77
C533A6	♦CRS	206 - 78
C533A-G	♦CRS	206 - 79
C533A-M	CRS	206 - 80
C533A-X	CRS	206 - 81
C2611-21	♦REC	198 - 47
C2611-23	♦REC	198 - 48
C2621-21	♦REC	198 - 60
C2621-23	♦REC	198 - 51
C2631-21	♦REC	198 - 52
C2631-23	♦REC	198 - 53
C2641-21	♦REC	198 - 77
C2641-23	♦REC	198 - 78
C2641R21	♦REC	198 - 79
C2641R23	♦REC	198 - 80
C3011-11	♦REC	178 - 39
C3021-11	♦REC	178 - 59
C3031-11	♦REC	179 - 3
C3041-11	♦REC	179 - 82
C3041R11	♦REC	179 - 83

TYPE No.	MFRS	Pg&Line
C4011-11	♦REC	183 - 37
C4012-11	♦REC	184 - 31
C4021-11	♦REC	183 - 62
C4022-11	♦REC	184 - 37
C4031-11	♦REC	183 - 80
C4032-11	♦REC	184 - 41
C4041-11	♦REC	183 -108
C4041R11	♦REC	183 -109
C4042-11	♦REC	184 - 54
C4042R11	♦REC	184 - 55
C4311-11	♦REC	184 - 98
C4321-11	♦REC	184 -104
C4331-11	♦REC	185 - 16
C4341-11	♦REC	185 - 78
C4341R11	♦REC	185 - 79
C5011-11	♦REC	187 - 44
C5011-13	♦REC	187 - 45
C5012-11	♦REC	188 - 59
C5012-12	♦REC	188 - 60
C5021-11	♦REC	187 - 61
C5021-13	♦REC	187 - 62
C5022-11	♦REC	188 - 95
C5022-12	♦REC	188 - 96
C5031-11	♦REC	187 - 57
C5031-13	♦REC	187 - 58
C5032-11	♦REC	188 - 86
C5032-12	♦REC	188 - 87
C5041-11	♦REC	187 -102
C5041-13	♦REC	187 -103
C5041R11	♦REC	187 -104
C5041R13	♦REC	187 -105
C5042-11	♦REC	189 - 60
C5042-12	♦REC	189 - 61
C5042R11	♦REC	189 - 62
C5042R12	♦REC	189 - 63
C5335-5	♦CRS	206 - 85
C5335-6	♦CRS	206 - 86
C5335G	♦CRS	206 - 87
C5335M	CRS	206 - 88
C5335X	CRS	206 - 89
C5412-11	♦REC	199 - 57
C5412-21	♦REC	199 - 47
C5422-11	♦REC	199 - 60
C5422-21	♦REC	199 - 49
C5432-11	♦REC	199 - 59
C5432-21	♦REC	199 - 48
C5442-11	♦REC	199 - 70
C5442-21	♦REC	199 - 50
C5442R11	♦REC	199 - 71
C5442R21	♦REC	199 - 51
C5611-11	♦REC	191 - 95
C5612-11	♦REC	192 - 66
C5612-12	♦REC	191 - 45
C5621-11	♦REC	192 - 8
C5622-11	♦REC	192 - 86
C5622-12	♦REC	191 - 60
C5631-11	♦REC	192 - 2
C5632-11	♦REC	192 - 82
C5632-12	♦REC	191 - 57
C5641-11	♦REC	192 - 44
C5641R11	♦REC	192 - 45
C5642-11	♦REC	192 -109
C5642-12	♦REC	191 - 78
C5642R11	♦REC	192 -110
C5642R12	♦REC	191 - 79
C6311-11	♦REC	196 - 54
C6311-21	♦REC	196 - 62
C6311-23	♦REC	196 - 63
C6321-11	♦REC	196 - 59
C6321-21	♦REC	196 - 70
C6321-23	♦REC	196 - 71
C6331-11	♦REC	196 - 56
C6331-21	♦REC	196 - 66
C6331-23	♦REC	196 - 67
C6341-11	♦REC	196 - 74
C6341-21	♦REC	196 - 82
C6341-23	♦REC	196 - 83
C6341R11	♦REC	196 - 75
C6341R21	♦REC	196 - 84
C6341R23	♦REC	196 - 85
C8011-11	♦REC	197 - 49
C8021-11	♦REC	197 - 59
C8031-11	♦REC	197 - 57
C8041-11	♦REC	197 - 88
C8041R11	♦REC	197 - 89
C30116	♦RCA	82 - 1
C30116F	♦RCA	82 - 2
C30122	♦RCA	82 - 97
C30130	♦RCA	97 - 16
C30133	♦RCA	82 - 4
C30807	♦RCA	105 - 96
C30808	♦RCA	105 -101
C30809	♦RCA	105 -105
C30810	♦RCA	105 -106
C30812	♦RCA	105 - 92
C30815	♦RCA	125 - 8
C30816	♦RCA	125 - 9
C30817	♦RCA	99 - 28
C30822	♦RCA	105 -103
C30831	♦RCA	105 - 97
C30843	RCA	232 - 53
C30844	RCA	232 - 54
C30845	RCA	232 - 55
C30846	RCA	232 - 56
C30849	♦RCA	108 - 85
C30850	♦RCA	108 - 86
C30851	♦RCA	108 - 87
C30852	♦RCA	108 - 88
C30853	♦RCA	108 - 89
C30854	♦RCA	108 - 90
C30872	♦RCA	99 - 16
C30895	♦RCA	99 - 29
C30900E	♦RCA	105 -102
C30902E	♦RCA	99 - 25

Δ-Registered with JEDEC by this manufacturer

♦-Mfr's data sheet available in microfilm service

1. TYPE No. CROSS INDEX

IN TYPE NUMBER SEQUENCE

TYPE No.	MFRS	Pg&Line
C30904E	♦RCA	99 - 26
C30905E	♦RCA	99 - 18
C30908E	♦RCA	99 - 20
C30916E	♦RCA	99 - 17
C30919E	♦RCA	125 - 7
C30921E	♦RCA	99 - 22
C30924E	♦RCA	127 - 53
C30925E	♦RCA	127 - 54
C30948E	♦RCA	108 -102
C30950E	♦RCA	99 - 34
C30950EL	♦RCA	99 - 35
C30950F	♦RCA	99 - 32
C30950FL	♦RCA	99 - 33
C30950G	♦RCA	99 - 30
C30950GL	♦RCA	99 - 31
C30952E	♦RCA	103 -103
C30952EL	♦RCA	103 -104
C30952F	♦RCA	103 - 98
C30952FL	♦RCA	103 - 99
C30952G	♦RCA	103 -102
C30952GL	♦RCA	104 - 11
C30954E	♦RCA	99 - 27
C30955E	♦RCA	99 - 21
C30956E	♦RCA	99 - 15
C30957E	♦RCA	105 - 14
C30971E	RCA	104 - 72
C30971EL	RCA	104 - 43
C30979E	♦RCA	108 - 5
C30980E	♦RCA	108 -106
C30980EL	♦RCA	108 - 96
C30986E	♦RCA	104 - 2
C30986EQC01	♦RCA	104 - 1
C32301	♦SAM	158 - 72
C32302	♦SAM	158 - 73
C32303	♦SAM	158 - 74
C32304	♦SAM	158 - 75
C32305	♦SAM	233 - 26
C32306	♦SAM	233 - 27
C32307	♦SAM	233 - 28
C32308	♦SAM	233 - 29
C86000E	♦RCA	96 -102
C86002E	♦RCA	96 - 6
C86003E-RS	♦RCA	231 - 75
C86003E-TS	♦RCA	231 - 76
C86006E	♦RCA	96 - 36
C86007E	♦RCA	96 - 59
C86008E	♦RCA	81 - 86
C86009E	♦RCA	81 - 87
C86010E	♦RCA	96 - 37
C86011E	RCA	82 - 10
C86012E-RS	♦RCA	231 - 77
C86012E-TS	♦RCA	231 - 78
C86013E	♦RCA	81 - 95
C86014E	♦RCA	86 - 99
C86022E	♦RCA	96 - 38
C86023E	♦RCA	97 - 18
C86025E	♦RCA	86 - 7
C86030E	♦RCA	97 - 46
C86037E	♦RCA	231 - 39
C86038E	♦RCA	88 - 68
C86038E/F	♦RCA	88 - 69
C86039EW1	♦RCA	97 - 71
C86039EW2	♦RCA	97 - 72
C86039EW3	♦RCA	97 - 75
C86039EW4	♦RCA	97 - 77
C86040EW1	♦RCA	97 - 73
C86040EW2	♦RCA	97 - 74
C86040EW3	♦RCA	97 - 76
C86040EW4	♦RCA	88 - 80
C86041E	♦RCA	231 - 40
C86042E	♦RCA	231 - 41
C86043E	♦RCA	82 - 98
CA3062	♦RCA	126 -110
CBC2014CF	♦CENB	110 - 1
CBC3026CF	♦CENB	110 - 5
CCPD128X4(A)	♦RET	128 - 98
CCPD128X8(A)	♦RET	129 - 5
CD11H	♦CENB	104 -101
CD11HL	♦CENB	105 - 55
CD33H2D	♦CENB	128 - 11
CD33H4D	♦CENB	128 - 19
CD33H	♦CENB	105 - 22
CD33HF	♦CENB	105 - 33
CD33HL	♦CENB	105 - 71
CD33HLF	♦CENB	105 - 72
CD1515H4D	♦CENB	128 - 20
CD2014C	♦CENB	105 - 9
CD5116H20	CENB	128 - 10
CEN710	♦CENB	160 - 16
CEN720	♦CENB	159 - 72
CEN730	♦CENB	157 -103
CEN810	♦CENB	118 - 39
CEN811	♦CENB	116 - 78
CEN820	♦CENB	116 - '86
CEN1210	♦CENB	103 - 73
CEN1211	♦CENB	103 - 74
CEN1220	♦CENB	103 - 75
CEN2010	♦CENB	86 - 15
CEN2020	♦CENB	84 -103
CEN2040	♦CENB	85 - 92
CG4000	LAD	108 - 99
CG4100	LAD	108 - 98
CG4200	LAD	108 -100
CK3G	♦RTN	70 - 88
CK3R	♦RTN	43 - 51
CK3Y	♦RTN	61 - 85
CK5G	♦RTN	70 - 89
CK5R	♦RTN	43 - 52
CK5Y	♦RTN	61 - 86
CK1101	♦RTN	162 - 62
CK1101P	♦RTN	162 - 63
CK1102	♦RTN	162 - 55
CK1102P	♦RTN	162 - 56
CK1103	♦RTN	162 - 18
CK1103P	♦RTN	162 - 19
CK1104	♦RTN	162 - 20
CK1104P	♦RTN	162 - 21
CK1105	♦RTN	163 - 73
CK1106	RTN	163 - 68
CK1108	♦RTN	163 - 67
CK1111	♦RTN	162 - 97
CK1111P	♦RTN	162 - 98
CK1112	♦RTN	162 - 57
CK1112P	♦RTN	162 - 58
CK1113	RTN	162 - 44
CK1113P	RTN	162 - 45
CK1114	♦RTN	161 - 49
CK1115	♦RTN	161 - 24
CK1116	♦RTN	161 - 36
CK1117	RTN	161 - 38
CK1121	♦RTN	161 - 87
CK1121W	RTN	161 - 23
CK1122	♦RTN	161 - 97
CK1122B	RTN	161 - 96
CK1122W	RTN	161 - 99
CK1123	♦RTN	161 - 88
CK1124	♦RTN	161 -107
CK1201	♦RTN	130 - 57
CK1202	♦RTN	130 - 46
CK1203	♦RTN	130 - 53
CK1204	♦RTN	130 - 76
CK1205	♦RTN	130 - 84
CK1206	♦RTN	133 - 94
CK1207	♦RTN	135 - 5
CK1208	RTN	131 - 53
CK1209	RTN	132 - 24
CK1210	RTN	132 - 82
CK1211	RTN	132 - 25
CK1212	RTN	130 - 97
CK1213	RTN	132 - 84
CK1214	RTN	132 - 37
CK1216	RTN	130 - 82
CK1217	RTN	130 - 98
CK1218	RTN	131 - 70
CK1219	RTN	132 - 14
CK1220	RTN	132 - 39
CK1221	♦RTN	132 - 38
CK1222	♦RTN	133 - 31
CK1223	♦RTN	133 - 91
CK1224	♦RTN	130 - 81
CK1225	♦RTN	133 - 13
CK1226	♦RTN	133 - 53
CK1227	RTN	135 - 6
CK1228	RTN	135 - 15
CK1230	RTN	133 - 33
CK1231	RTN	133 - 15
CK1232	RTN	131 - 94
CK1233	RTN	132 - 64
CK1234	RTN	133 - 47
CK1241	♦RTN	130 - 77
CK1242	♦RTN	130 - 89
CK1243	♦RTN	131 - 68
CK1244	♦RTN	132 - 40
CK1245	♦RTN	130 - 99
CK1246	♦RTN	133 - 16
CK1247	♦RTN	134 - 13
CK1248	RTN	132 - 41
CK1249	RTN	131 - 92
CK1250	♦RTN	131 - 33
CK1251	RTN	130 - 39
CK1252	RTN	133 - 36
CK1253	RTN	132 - 74
CK1254	RTN	133 - 19
CK1255	RTN	131 - 57
CK1256	RTN	131 - 95
CK1257	RTN	133 - 17
CK1258	RTN	133 - 34
CK1260	RTN	135 - 63
CK1261	♦RTN	132 - 26
CK1262	♦RTN	133 - 32
CK1263	♦RTN	133 - 92
CK1264	♦RTN	133 - 9
CK1265	♦RTN	131 - 55
CK1266	♦RTN	131 - 54
CK1267	RTN	133 - 58
CK1268	RTN	134 - 91
CK1271	♦RTN	130 - 25
CK1273	♦RTN	135 - 80
CK1274	♦RTN	135 - 96
CK1275	RTN	135 - 94
CK1276	♦RTN	135 - 82
CK1277	♦RTN	135 - 98
CK1278	♦RTN	135 -104
CK1279	♦RTN	135 - 78
CK1280	♦RTN	135 - 81
CK1281	♦RTN	135 - 90
CK1282	♦RTN	135 -101
CK1283	♦RTN	135 -105
CK1284	♦RTN	136 - 1
CK1285	♦RTN	136 - 17
CK1286	RTN	133 - 37
CK1287	RTN	132 - 34
CK1288	RTN	132 - 90
CK1289	RTN	133 - 38
CK1290	♦RTN	132 - 35
CK1291	RTN	133 - 39
CK1292	RTN	132 - 16
CK1293	RTN	131 - 61
CK2000	RTN	161 - 85
CK2000B	RTN	161 - 16
CK2002	RTN	161 - 17
CK2003	RTN	161 - 27
CK2008P	RTN	162 - 32
CK2013	RTN	161 - 20
CK2015	RTN	161 -105
CK2018	RTN	161 - 90
CK2019	RTN	161 -101
CK2024	♦RTN	163 - 14
CK2025P	RTN	162 - 64
CK2028	RTN	161 - 91
CK2028A	RTN	161 - 92
CK2028B	RTN	161 - 25
CK2029	RTN	163 - 64
CK2030	RTN	163 - 71
CK2032	RTN	163 - 61
CK2033	♦RTN	162 - 47
CK2034	RTN	163 - 62
CK2035	♦RTN	163 - 63
CK2037	RTN	162 - 70
CK2038	♦RTN	162 - 73
CK2039	RTN	161 - 52
CK2040	RTN	162 - 33
CK2041	RTN	162 - 65
CK2042	RTN	162 - 66
CK2043	RTN	162 - 34
CK2046	RTN	161 - 37
CK2051	♦RTN	161 -106
CK2052	♦RTN	161 - 93
CK2053	♦RTN	161 -104
CK2060	♦RTN	163 - 74
CK2065	RTN	163 - 70
CK2066	RTN	163 - 69
CK2067	RTN	163 - 72
CK2070	RTN	161 - 70
CK2071	♦RTN	161 - 58
CK2072	♦RTN	161 - 67
CK2078	RTN	161 -100
CK2080	RTN	161 - 51
CK2086	RTN	161 -102
CK2095	RTN	161 - 65
CK2101	RTN	161 - 18
CK2102	RTN	162 - 35
CK2103	RTN	162 - 16
CK2104	RTN	162 - 10
CK2105	RTN	162 - 36
CK2106	RTN	162 - 42
CK2112	RTN	161 - 31
CK2114	♦RTN	163 - 6
CK2117	♦RTN	163 - 5
CK2118	RTN	161 - 21
CK2124	RTN	161 - 40
CK2125	♦RTN	163 - 15
CK2127	RTN	161 - 50
CK2129	RTN	163 - 65
CK2132	RTN	161 - 98
CK2137	RTN	161 - 95
CK2139	RTN	161 - 86
CK2140	♦RTN	161 - 76
CK2141	♦RTN	161 - 72
CK2142	♦RTN	161 - 41
CK2143	♦RTN	161 - 71
CK2145	♦RTN	162 - 30
CK2146	♦RTN	162 - 79
CK2147	RTN	161 -103
CK2148	RTN	161 - 94
CK2149	RTN	161 - 89
CK2150	♦RTN	161 - 32
CK2151	♦RTN	161 - 56
CK2153	♦RTN	161 - 59
CK2154	♦RTN	161 - 77
CK2155	RTN	161 - 57
CK2157	RTN	161 - 44
CK2160	♦RTN	162 - 61
CK2161	♦RTN	162 - 81
CK2162	RTN	162 - 74
CK2170	♦RTN	163 - 75
CK2171	♦RTN	163 - 76
CK2172	RTN	161 - 33
CK2173	RTN	161 - 45
CK2177	RTN	162 -104
CK2178	RTN	162 -107
CK2185	♦RTN	162 - 37
CK2186	♦RTN	162 - 48
CK2187	♦RTN	162 - 80
CK2190P	♦RTN	169 - 63
CK2195	♦RTN	167 - 66
CK2200	♦RTN	166 - 46
CK2201	♦RTN	166 - 41
CK2202	♦RTN	166 - 40
CL3P7L	CLA	130 - 90
CL5M2	CLA	134 - 65
CL5M2L	CLA	132 - 85
CL5M3	CLA	132 - 43
CL5M4	CLA	130 -103
CL5M4L	CLA	130 - 40
CL5M5	CLA	132 - 87
CL5M5L	CLA	130 -100
CL5M7	CLA	132 - 44
CL5M9M	CLA	133 - 27
CL5P4	CLA	131 - 48
CL5P4L	CLA	130 - 52
CL5P5	CLA	132 - 88
CL5P5L	CLA	130 -101
CL5P5M	CLA	132 - 32
CL5P9M	CLA	132 - 89
CL7P4	CLA	134 - 63
CL7P4L	CLA	130 - 85
CL7P5	CLA	135 - 34
CL7P5H-ID	CLA	135 -110
CL7P5HL	CLA	134 - 2
CL7P5L	CLA	131 - 65
CL7P7HL	CLA	133 - 14
CL7P7HM	CLA	134 - 18
CL7P9L	CLA	134 - 3
CL9P4L	CLA	131 - 27
CL9P5	CLA	135 - 32
CL9P5HL	CLA	134 -109
CL9P5L	CLA	133 - 10
CL9P7HL	CLA	133 -104
CL9P7HLL	CLA	131 - 99
CL9P9L	CLA	134 -110
CL9P9LL	CLA	133 - 52
CL602	CLA	135 - 66
CL603	CLA	135 - 18
CL603A	CLA	134 - 90
CL603AL	CLA	131 - 71
CL604	CLA	134 - 15
CL604L	CLA	130 -102
CL604M	CLA	132 - 65
CL605	CLA	135 - 35
CL605L	CLA	132 - 63
CL607	CLA	135 - 19
CL607L	CLA	131 - 72
CL702	CLA	136 - 23
CL702L2	CLA	136 - 7
CL702L	CLA	135 -109
CL703	CLA	136 - 18
CL703/2	CLA	136 - 10
CL703A	CLA	136 - 14
CL703L2	CLA	135 - 95
CL703L	CLA	135 - 86
CL703M	CLA	136 - 4
CL704	CLA	136 - 5
CL704/2	CLA	133 - 74
CL704L2	CLA	135 - 79
CL704L	CLA	135 - 77
CL705	CLA	136 - 20
CL705/2	CLA	136 - 21
CL705HL2	CLA	136 - 13
CL705HL	CLA	136 - 2
CL705L2	CLA	135 - 97
CL705L	CLA	135 - 89
CL707	CLA	136 - 19
CL707H	CLA	136 - 22
CL707HL	CLA	135 -103
CL707HM	CLA	136 - 16
CL707L	CLA	135 - 87
CL709L	CLA	136 - 3
CL902	CLA	135 - 65
CL902L	♦CLA	134 - 83
CL903	CLA	135 - 16
CL903A	CLA	134 - 84
CL903L	♦CLA	132 - 27
CL903N	CLA	134 - 78
CL904	CLA	134 - 14
CL904L	♦CLA	131 - 28
CL904N	CLA	133 - 54
CL905	CLA	135 - 33
CL905HL	♦CLA	135 - 1
CL905HLL	♦CLA	133 - 24
CL905HN	CLA	135 - 61
CL905L	♦CLA	133 - 11
CL905N	CLA	134 - 93
CL907	CLA	135 - 17
CL907HL	CLA	133 -105
CL907HN	CLA	135 - 45
CL907L	CLA	132 - 28
CL907N	CLA	134 - 79
CL909L	CLA	135 - 2
CLA7	♦CLA	167 - 65
CLA7AA	CLA	167 - 67
CLA7D	♦CLA	169 - 77
CLA7DA	CLA	169 - 86
CLA60	♦CLA	167 - 70
CLA60AA	CLA	167 - 69
CLA60AB	CLA	167 - 68
CLA65	CLA	169 - 88
CLA65AA	CLA	169 - 87
CLA90	♦CLA	173 - 67
CLA90AA	♦CLA	173 - 68
CLCD621	CLA	107 - 11
CLCD621-4	CLA	128 - 21
CLCD637	CLA	107 - 4
CLCD637-4	CLA	128 - 22
CLCD641	CLA	107 - 12
CLCD765	CLA	107 - 5
CLCD765-4	CLA	128 - 23
CLCD798	CLA	107 - 13
CLCLL208	CLA	83 - 37
CLCLL2011	CLA	83 - 38
CLCLL2041	CLA	40 - 6
CLCR784	CLA	122 - 26
CLCT320	CLA	116 - 21
CLCT320A	CLA	117 - 44
CLCT367	CLA	115 - 71
CLCT511	CLA	115 - 96
CLCT511A4	CLA	129 - 32
CLCT511A	CLA	116 - 47
CLCT726	CLA	129 - 22
CLCT726A	CLA	129 - 25
CLCT809	CLA	129 - 23
CLCT809A	CLA	129 - 26
CLCT810	CLA	129 - 24
CLCT810A	CLA	129 - 27
CLD31	CLA	107 - 24
CLD41	CLA	107 - 17
CLD42	CLA	107 - 18
CLD56	CLA	107 - 25
CLD71	CLA	107 - 26
CLD72	CLA	107 - 27
CLED1	♦CLA	85 - 8
CLED1F	♦CLA	85 - 9
CLED5	CLA	86 - 76
CLED5-2	CLA	86 - 77
CLED155	CLA	84 -105
CLED155A	CLA	85 - 30
CLED155B	CLA	85 - 75
CLED155C	CLA	85 -105
CLED155D	CLA	86 - 8
CLED155F	CLA	84 -106
CLED155FA	CLA	85 - 31
CLED155FB	CLA	85 - 76
CLED155FC	CLA	85 -106
CLED155FD	CLA	86 - 9
CLED305	CLA	83 - 39
CLED400	♦CLA	82 - 90
CLED405	CLA	84 -107
CLI200	CLA	155 - 10
CLI210	CLA	151 - 34
CLI220	CLA	157 - 94
CLI230	CLA	156 - 65
CLI305	♦CLA	149 - 20
CLI325	♦CLA	156 -108
CLI355	♦CLA	157 - 97
CLI375	CLA	155 - 11
CLI385	CLA	158 - 6
CLI395	CLA	152 - 88
CLI500	CLA	151 - 35
CLI510	CLA	152 - 90
CLI600	CLA	158 - 52
CLI610	CLA	156 - 61
CLI700	CLA	158 - 51
CLI710	CLA	158 - 12
CLI800	♦CLA	152 - 32
CLI800M	♦CLA	152 - 33
CLI800W	♦CLA	152 - 34
CLI810	♦CLA	151 - 61
CLI810M	♦CLA	151 - 62
CLI810W	♦CLA	151 - 63
CLI811	CLA	151 - 64
CLI811M	♦CLA	151 - 65
CLI811W	♦CLA	151 - 66
CLI820	♦CLA	152 - 82
CLI820M	♦CLA	152 - 83
CLI820W	♦CLA	152 - 84
CLI821	CLA	152 - 85
CLI821M	♦CLA	152 - 86
CLI821W	♦CLA	152 - 87
CLI830	♦CLA	154 - 51
CLI830M	♦CLA	154 - 52
CLI830W	♦CLA	154 - 53
CLI831	CLA	154 - 54
CLI831M	♦CLA	154 - 55
CLI831W	♦CLA	154 - 56
CLI835	♦CLA	152 - 35
CLI835M	♦CLA	152 - 36
CLI835W	♦CLA	152 - 37
CLI836	CLA	157 - 10
CLI836M	♦CLA	152 - 38
CLI836W	♦CLA	152 - 39
CLI840	♦CLA	121 - 7
CLI840M	♦CLA	157 - 88
CLI840W	♦CLA	157 - 89
CLI841	CLA	156 -104
CLI841M	♦CLA	157 - 90
CLI841W	♦CLA	157 - 91
CLI850	♦CLA	121 - 8
CLI850M	♦CLA	157 -104
CLI850W	♦CLA	157 -105
CLI851	CLA	157 - 67
CLI851M	♦CLA	157 -106
CLI851W	♦CLA	157 -107
CLI860	♦CLA	121 - 9
CLI860M	♦CLA	158 - 9
CLI860W	♦CLA	158 - 10
CLI861	CLA	157 - 87
CLI861M	♦CLA	158 - 7
CLI861W	♦CLA	158 - 8
CLI870	♦CLA	121 - 10
CLI870M	♦CLA	154 - 57
CLI870W	♦CLA	154 - 58
CLI871	CLA	154 - 59
CLI871M	♦CLA	154 - 60
CLI871W	♦CLA	154 - 61
CLI890	CLA	158 - 13
CLI890M	CLA	158 - 14
CLI890W	CLA	158 - 15
CLI892	CLA	158 - 16
CLI892M	CLA	158 - 17
CLI892W	CLA	158 - 18
CLI894	CLA	158 - 19
CLI894M	CLA	158 - 20
CLI894W	CLA	158 - 21
CLI8905	CLA	158 - 22
CLI8905M	CLA	158 - 23
CLI8905W	CLA	158 - 24
CLI8910	CLA	158 - 25
CLI8910M	CLA	158 - 26
CLI8910W	CLA	158 - 27
CLI8912	CLA	158 - 28
CLI8912M	CLA	158 - 29
CLI8912W	CLA	158 - 30
CLI8914	CLA	158 - 31
CLI8914M	CLA	158 - 32
CLI8914W	CLA	158 - 33
CLI8925	CLA	158 - 34
CLI8925M	CLA	158 - 35
CLI8925W	CLA	158 - 36
CLI8945	CLA	158 - 37
CLI8945M	CLA	158 - 38
CLI8945W	CLA	158 - 39
CLL4040	CLA	125 - 49
CLL4041	CLA	125 - 50
CLL4042	CLA	125 - 51
CLM5H10A	CLA	161 - 14
CLM7H16A	CLA	161 - 13
CLM50	CLA	163 - 12
CLM51	CLA	163 - 11
CLM60	CLA	163 - 16
CLM61	CLA	163 - 13
CLM3000	♦CLA	162 -102
CLM3006A	♦CLA	162 -109
CLM3012A	♦CLA	162 -110
CLM3120A	CLA	163 - 1
CLM3500	♦CLA	162 -100
CLM3500/2	CLA	162 -101
CLM3700	CLA	162 -103
CLM4006A	♦CLA	163 - 2
CLM4012A	♦CLA	163 - 3
CLM4120A	♦CLA	163 - 4

Δ-Registered with JEDEC by this manufacturer

♦-Mfr's data sheet available in microfilm service

1. TYPE No. CROSS INDEX

IN TYPE NUMBER SEQUENCE

TYPE No.	MFRS	Pg&Line
CLM6000	CLA	162 -106
CLM6200	CLA	162 -108
CLM6500	CLA	162 -105
CLM7000	CLA	161 - 82
CLM7100	CLA	161 - 83
CLM7200	CLA	161 - 84
CLM8000	CLA	163 - 7
CLM8200	CLA	163 - 19
CLM8200/2	CLA	163 - 20
CLM8500	CLA	163 - 17
CLM8500/2	CLA	163 - 10
CLM8500HV	CLA	163 - 21
CLM8600	CLA	163 - 18
CLM9000	CLA	163 - 55
CLR2049	♦CLA	115 - 86
CLR2050	♦CLA	121 - 38
CLR2060	♦CLA	121 - 66
CLR2170	♦CLA	121 - 77
CLR2180	♦CLA	121 -108
CLR4180	♦CLA	121 - 23
CLR4185	♦CLA	121 - 41
CLR5101	♦CLA	121 - 78
CLR5101-2	CLA	121 - 79
CLT2010	♦CLA	116 - 96
CLT2020	♦CLA	117 - 79
CLT2030	♦CLA	118 - 66
CLT2064	♦CLA	118 - 71
CLT2065	♦CLA	119 - 50
CLT2130	♦CLA	120 - 33
CLT2140	♦CLA	118 - 87
CLT2150	♦CLA	119 - 63
CLT2160	♦CLA	119 - 95
CLT2164	CLA	119 - 51
CLT2165	CLA	119 -110
CLT4140	♦CLA	116 - 48
CLT4150	♦CLA	117 - 7
CLT4160(1)	♦CLA	118 - 52
CLT4200	CLA	118 - 21
CLT5160	♦CLA	116 - 49
CLT5170	♦CLA	117 - 89
CM4-7607	♦CHM	52 - 24
CM702	♦OPCJ	207 - 61
CM723	♦OPCJ	208 - 66
CM727	♦OPCJ	205 - 61
CM729	♦OPCJ	208 - 94
CM730	♦OPCJ	210 - 54
CM751	♦OPCJ	206 - 71
CM758	♦OPCJ	208 - 67
CMD55A	♦CHM	40 -105
CMD269	♦CHM	47 - 19
CMD369	♦CHM	72 - 95
CMD569	♦CHM	63 - 59
CMD5020	♦CHM	44 - 89
CMD5021	♦CHM	44 - 20
CMD5022	♦CHM	44 - 78
CMD5023	♦CHM	42 -109
CMD5024	♦CHM	46 - 6
CMD5025	♦CHM	40 - 78
CMD5026	♦CHM	40 - 79
CMD5050	♦CHM	55 - 36
CMD5051	♦CHM	42 -110
CMD5052	♦CHM	45 - 25
CMD5053	♦CHM	45 -108
CMD5053-1	♦CHM	45 -106
CMD5053-2	♦CHM	49 - 80
CMD5054-1	♦CHM	47 - 16
CMD5054-2	♦CHM	50 - 43
CMD5054-3	♦CHM	51 - 60
CMD5055	♦CHM	40 - 80
CMD5056	♦CHM	41 - 38
CMD5074C	♦CHM	44 - 77
CMD5075C	♦CHM	45 - 22
CMD5077C	♦CHM	41 - 95
CMD5094C	♦CHM	45 - 70
CMD5274C	♦CHM	71 - 40
CMD5277C	♦CHM	69 - 80
CMD5352	♦CHM	68 - 6
CMD5352-2	♦CHM	68 - 39
CMD5353	♦CHM	66 - 7
CMD5353-2	♦CHM	65 - 83
CMD5354	♦CHM	68 - 74
CMD5374C	♦CHM	63 - 69
CMD5377C	♦CHM	63 - 46
CMD5752	♦CHM	53 - 97
CMD5752-2	♦CHM	54 - 63
CMD5753	♦CHM	51 - 91
CMD5753-2	♦CHM	51 - 44
CMD5754	♦CHM	51 - 92
CMD5774C	♦CHM	49 - 21
CMD5777C	♦CHM	46 -108
CMD9150-1	♦CHM	60 - 7
CMD9150-2	♦CHM	60 - 30
CMD9350-1	♦CHM	68 - 40
CMD9350-2	♦CHM	68 - 90
CMD9531	♦CHM	235 - 80
CMD9532	♦CHM	235 - 81
CMD9741	♦CHM	236 - 1
CMD51640	♦CHM	57 - 26
CMD51641	♦CHM	58 - 2
CMD51642	♦CHM	58 - 70
CMD53124	♦CHM	63 - 60
CMD53164	♦CHM	93 - 98
CMD53173	♦CHM	66 - 80
CMD53640	♦CHM	63 - 67
CMD53641	♦CHM	64 - 80
CMD53642	♦CHM	66 - 6
CMD54124	♦CHM	74 - 97
CMD54164	♦CHM	94 - 24
CMD54173	♦CHM	76 - 6
CMD54521	♦CHM	78 - 23
CMD54531	♦CHM	76 - 95
CMD54643	♦CHM	74 -109
CMD54644	♦CHM	76 - 83
CMD57124	♦CHM	47 - 20

TYPE No.	MFRS	Pg&Line
CMD57164	♦CHM	93 - 91
CMD57173	♦CHM	52 - 31
CMD57640	♦CHM	47 - 38
CMD57641	♦CHM	49 - 20
CMD57642	♦CHM	50 - 97
CMN58A	♦CHM	177 - 72
CMN72A	♦CHM	178 - 25
CMN73A	♦CHM	177 - 73
CMN74A	♦CHM	178 - 26
CMN78A	♦CHM	177 - 74
CMN3620A	♦CHM	179 - 14
CMN3640A	♦CHM	179 - 15
CMN3680A	♦CHM	177 - 99
CMN3910A	♦CHM	178 - 72
CMN3920A	♦CHM	178 - 73
CMN3930A	♦CHM	177 - 87
CMN3940A	♦CHM	178 - 74
CMN3980A	♦CHM	177 - 88
CMN4610A	♦CHM	183 - 69
CMN4640A	♦CHM	183 - 70
CMN4680A	♦CHM	182 -110
CMN4705A	♦CHM	183 - 26
CMN4710A	♦CHM	183 - 27
CMN4780A	♦CHM	182 - 97
CMN4880A	♦CHM	183 - 1
CMN4905A	♦CHM	183 - 42
CMN4910A	♦CHM	183 - 43
CMN4940A	♦CHM	183 - 44
CMN4980A	♦CHM	182 -103
CMN6640	♦CHM	192 - 87
CMN6680	♦CHM	192 - 9
CMN6710	♦CHM	192 - 61
CMN6730	♦CHM	191 - 41
CMN6740	♦CHM	192 - 62
CMN6780	♦CHM	191 - 91
CMN6910	♦CHM	192 - 75
CMN6930	♦CHM	191 - 52
CMN6940	♦CHM	192 - 76
CMN6950	♦CHM	191 - 53
CMN6960	♦CHM	191 -105
CMN6980	♦CHM	191 -106
CMN8910	♦CHM	197 - 52
CMN8930	♦CHM	197 - 53
CMN8940	♦CHM	197 - 54
CMN8950	♦CHM	197 - 55
CMN56120	♦CHM	188 -103
CMN56240	♦CHM	190 - 22
CMN56320	♦CHM	188 -104
CMN56440	♦CHM	190 - 23
CMN58120	♦CHM	188 -105
CMN58240	♦CHM	190 - 24
CMN58320	♦CHM	188 -106
CMN58440	♦CHM	190 - 25
CMN59120	♦CHM	188 - 69
CMN59240	♦CHM	190 - 26
CMN59320	♦CHM	188 - 70
CMN59440	♦CHM	190 - 27
CN304	♦STAJ	86 - 59
CN305	♦STAJ	86 - 36
CNG35(A)	PHIN	166 - 53
CNG36(A)	PHIN	166 - 63
CNR21	♦ALGG	172 - 14
CNR36(A)	PHIN	166 - 54
CNX21	♦APX	168 - 8
♦MULB	♦PHIN	
♦RTCF	VALG	
CNX21T	MULB	168 - 3
PHIN	RTCF	
	VALG	
CNX35	♦APX	166 - 55
♦MULB	♦PHIN	
♦RTCF	VALG	
CNX35U	PHIN	166 - 56
CNX36	♦APX	166 - 64
♦MULB	♦PHIN	
♦RTCF	VALG	
CNX36U	PHIN	166 - 65
CNX37(A)	♦APX	167 - 23
♦MULB	♦PHIN	
♦RTCF	♦VALG	
CNX38	♦APX	166 - 61
MULB	♦PHIN	
RTCF	VALG	
CNX38U	PHIN	166 - 62
CNX39	PHIN	166 - 59
CNX39U	PHIN	166 - 60
CNX44(A)	♦APX	164 - 74
♦MULB	♦PHIN	
♦RTCF	♦VALG	
CNX44A	PHIN	164 - 62
CNX46(A)	PHIN	164 - 75
CNX48	♦APX	169 - 61
MULB	♦PHIN	
RTCF	VALG	
CNX48U	PHIN	169 - 62
CNX62(A)	♦APX	167 - 15
♦MULB	♦PHIN	
♦RTCF	♦VALG	
CNX72(A)	PHIN	167 - 16
CNX82(A)	PHIN	167 - 17
CNX83(A)	PHIN	167 - 18
CNX91(A)	PHIN	164 - 56
CNX92(A)	PHIN	164 - 57
CNY17-1	MOTA	166 - 66
PHIN	♦SIEG	
	♦SIEX	
CNY17-2	MOTA	166 - 68
PHIN	♦SIEG	
	♦SIEX	
CNY17-3	MOTA	166 - 72
PHIN	♦SIEG	
	♦SIEX	
CNY17-4	MOTA	166 - 73
cont.next col.		

TYPE No.	MFRS	Pg&Line
CNY17-4		
(cont.)	PHIN	
♦SIEG	♦SIEX	
CNY17A	♦GIC	167 - 25
CNY17B	♦GIC	167 - 32
CNY17C	♦GIC	167 - 38
CNY17D	♦GIC	167 - 44
CNY17F1	♦SIEG	167 - 26
	♦SIEX	
CNY17F2	♦SIEG	166 - 67
	♦SIEX	
CNY17F3	♦SIEG	166 - 69
	♦SIEX	
CNY17I	♦FSC	166 - 24
♦GESY	OTK	
	♦TRWO	
CNY17II	♦FSC	166 - 27
♦GESY	OTK	
	♦TRWO	
CNY17III	♦FSC	166 - 28
♦GESY	OTK	
	♦TRWO	
CNY17IV	♦FSC	166 - 30
♦GESY	OTK	
	♦TRWO	
CNY18-5	♦SIEG	164 - 52
CNY18III	♦ALGG	164 - 44
CNY18IV	♦ALGG	164 - 45
CNY18V	♦ALGG	164 - 46
CNY18VI	♦ALGG	164 - 47
CNY21	♦ALGG	167 - 57
CNY21EXI(A)	♦ALGG	168 - 10
CNY21N	♦ALGG	168 - 9
CNY28	♦GESY	152 - 40
CNY29	♦GESY	156 -105
CNY30	♦GESY	171 - 6
	OTK	
CNY31	♦GESY	169 - 54
CNY32	♦GESY	166 - 14
CNY33	♦GESY	165 - 4
	OTK	
CNY34	♦GESY	171 - 10
	OTK	
CNY35	♦GESY	164 - 58
	OTK	
CNY36	GESY	151 - 67
♦GIC	♦TRWO	
CNY37	GIC	154 - 33
CNY47	♦GESY	165 - 42
	OTK	
CNY47A	♦GESY	165 - 45
	OTK	
CNY48	♦GESY	169 - 24
MULB	OTK	
PHIN	RTCF	
	VALG	
CNY50-1	MULB	164 - 37
PHIN	RTCF	
	VALG	
CNY50-2	PHIN	164 - 38
CNY51	♦GESY	166 - 93
	OTK	
CNY52	♦APX	167 - 14
♦MULB	♦PHIN	
♦RTCF	VALG	
CNY53	♦APX	166 - 47
♦MULB	♦PHIN	
♦RTCF	VALG	
CNY57	♦APX	166 - 50
♦MULB	♦PHIN	
♦RTCF	VALG	
CNY57A	♦APX	166 - 57
♦MULB	♦PHIN	
♦RTCF	VALG	
CNY57AU	PHIN	166 - 58
CNY57U	PHIN	166 - 51
CNY62	♦APX	167 - 20
♦MULB	♦PHIN	
♦RTCF	VALG	
CNY63	♦APX	166 - 48
♦MULB	PHIN	
♦RTCF	VALG	
CNY64	♦ALGG	167 -107
CNY64A	♦ALGG	167 -108
CNY64B	♦ALGG	167 -109
CNY64C	♦ALGG	167 -110
CNY65	♦ALGG	168 - 11
CNY65A	♦ALGG	168 - 12
CNY65B	♦ALGG	168 - 13
CNY65C	♦ALGG	168 - 14
CNY66	♦ALGG	168 - 16
CNY66A	♦ALGG	168 - 17
CNY66B	♦ALGG	168 - 18
CNY66C	♦ALGG	168 - 19
CNY70	♦ALGG	164 - 4
CNY71	♦ALGG	164 - 8
CNY74-2	♦ALGG	165 - 96
CNY74-4	♦ALGG	165 - 98
CNY75(A)	♦ALGG	164 - 10
CNY75A	♦ALGG	164 - 23
	♦GIC	
CNY75B(A)	♦ALGG	164 - 26
	♦GIC	
CNY75C	♦ALGG	164 - 32
	♦GIC	
CNY75GA	♦ALGG	164 - 24
CNY75GB	♦ALGG	164 - 27
CNY75GC	♦ALGG	164 - 33
CP22C	♦CENB	109 - 39
CP44H	♦CENB	109 - 40
CP55	♦CENB	109 - 41
CP1005	♦NEI	229 - 76
CP1007GL	♦NEI	229 - 74
CP1009GLR	NEI	225 -100

TYPE No.	MFRS	Pg&Line
CP1010B	♦CENB	109 - 42
CP1511	♦CENB	110 - 2
CP1511B	♦CENB	110 - 3
CP1511C	♦CENB	110 - 4
CP1812	♦CENB	110 - 6
CP2006A	NEI	227 - 45
CP2025GR	NEI	227 -107
CP2032	NEI	227 - 38
CP5011C	NEI	228 - 53
CQ4-32	♦MULB	193 - 89
♦PHIN	♦RTCF	
	♦VALG	
CQ209S	♦MULB	188 - 39
♦PHIN	RTCF	
	♦VALG	
CQ216X	♦MULB	189 - 34
♦PHIN	RTCF	
	♦VALG	
CQ216Y	♦MULB	188 - 40
♦PHIN	RTCF	
	♦VALG	
CQ327	♦MULB	193 - 90
♦PHIN	♦RTCF	
	♦VALG	
CQ327R	♦MULB	193 - 91
♦PHIN	♦RTCF	
	♦VALG	
CQ330	♦MULB	193 - 92
♦PHIN	♦RTCF	
	♦VALG	
CQ330R	♦MULB	193 - 93
♦PHIN	♦RTCF	
	♦VALG	
CQ331	♦MULB	193 - 94
♦PHIN	♦RTCF	
	♦VALG	
CQ331R	♦MULB	193 - 95
♦PHIN	♦RTCF	
	♦VALG	
CQ332	♦MULB	193 - 96
♦PHIN	♦RTCF	
	♦VALG	
CQ332R	♦MULB	193 - 97
♦PHIN	♦RTCF	
	♦VALG	
CQ427	♦MULB	193 - 98
♦PHIN	♦RTCF	
	♦VALG	
CQ427R	♦MULB	193 - 99
♦PHIN	♦VALG	
CQ430	♦MULB	193 -100
♦PHIN	♦RTCF	
	♦VALG	
CQ430R	♦MULB	193 -101
♦PHIN	♦RTCF	
	♦VALG	
CQ431	♦MULB	193 -102
♦PHIN	♦RTCF	
	♦VALG	
CQ431R	♦MULB	193 -103
♦PHIN	♦RTCF	
	♦VALG	
CQ432	♦MULB	193 -104
♦PHIN	♦RTCF	
	♦VALG	
CQ432R	♦MULB	193 -105
♦PHIN	♦RTCF	
	♦VALG	
CQF24	♦APX	82 - 24
♦MULB	♦PHIN	
♦RTCF	♦VALG	
CQL10	MULB	97 - 34
PHIN	RTCF	
	VALG	
CQL10A	♦APX	96 -105
♦MULB	♦PHIN	
♦RTCF	♦VALG	
CQL10B	APX	97 - 41
CQL13	♦MULB	96 - 58
♦PHIN	♦RTCF	
	♦VALG	
CQL13A	PHIN	236 - 2
CQL13C	♦APX	84 - 48
CQL14A	♦APX	87 - 51
CQL14B	♦APX	87 - 52
CQL16	♦MULB	236 - 3
♦PHIN	♦RTCF	
	♦VALG	
CQL17B	♦PHIN	236 - 4
CQN10(A)	♦MULB	50 - 11
♦PHIN	♦RTCF	
	♦VALG	
CQN11(A)	♦MULB	74 - 98
♦PHIN	♦RTCF	
	♦VALG	
CQN12	♦PHIN	66 - 55
CQS51(A)	♦PHIN	45 - 7
CQS51-3(A)	♦PHIN	49 - 61
CQS51-4(A)	♦PHIN	51 - 29
CQS51L3(A)	♦PHIN	49 - 62
CQS51L4(A)	♦PHIN	51 - 30
CQS51L(A)	♦PHIN	45 - 8
CQS54	♦PHIN	45 - 24
CQS54-2	♦PHIN	47 - 53
CQS54-3	♦PHIN	49 - 85
CQS82AL4	♦PHIN	51 - 39
CQS82AL5	♦PHIN	52 - 39
CQS82AL6	♦PHIN	53 - 27
CQS82AL	♦PHIN	49 - 67
CQS82L2	♦PHIN	47 - 39
CQS82L3	♦PHIN	49 - 78
CQS82L4	♦PHIN	51 - 90
CQS82L	♦PHIN	45 - 20
CQS84L3	♦PHIN	74 - 41

TYPE No.	MFRS	Pg&Line
CQS84L4	♦PHIN	75 - 51
CQS84L5	♦PHIN	76 - 21
CQS84L	♦PHIN	71 - 62
CQS86L3	♦MULB	64 - 96
♦PHIN	♦RTCF	
	♦VALG	
CQS86L4	♦MULB	66 - 20
♦PHIN	♦RTCF	
	♦VALG	
CQS86L5	♦MULB	60 - 63
♦PHIN	♦RTCF	
	♦VALG	
CQS86L	♦MULB	62 - 50
♦PHIN	♦RTCF	
	♦VALG	
CQS93	♦MULB	40 - 46
♦PHIN	♦RTCF	
	♦VALG	
CQS93-2	♦MULB	47 - 29
♦PHIN	♦RTCF	
	♦VALG	
CQS93-3	♦MULB	49 - 75
♦PHIN	♦RTCF	
	♦VALG	
CQS93E2	♦PHIN	47 - 30
CQS93E3	♦PHIN	49 - 76
CQS93E	♦PHIN	45 - 15
CQS93L2	♦PHIN	47 - 31
CQS93L3	♦PHIN	49 - 77
CQS93L	♦PHIN	45 - 16
CQS95	♦PHIN	71 - 58
CQS95-2	♦PHIN	72 - 62
CQS95-3	♦PHIN	74 - 35
CQS95E4	♦PHIN	75 - 44
CQS95E5	♦PHIN	76 - 13
CQS95E	♦PHIN	74 - 36
CQS95L4	♦PHIN	75 - 45
CQS95L5	♦PHIN	76 - 14
CQS95L	♦PHIN	74 - 37
CQS97	♦PHIN	62 - 51
CQS97-2	♦PHIN	63 - 18
CQS97-3	♦PHIN	64 - 97
CQS97E4	♦PHIN	66 - 21
CQS97E5	♦PHIN	66 - 84
CQS97E	♦PHIN	64 - 98
CQS97L4	♦PHIN	66 - 22
CQS97L5	♦PHIN	66 - 85
CQS97L	♦PHIN	64 - 99
CQT10(A)	♦MULB	46 - 11
♦PHIN	RTCF	
	VALG	
CQT10B(A)	PHIN	79 - 22
CQT11	♦MULB	55 - 47
♦PHIN	♦RTCF	
	♦VALG	
CQT12	♦MULB	78 - 75
♦PHIN	♦RTCF	
	♦VALG	
CQT24(A)	PHIN	79 - 61
CQT60(A)	PHIN	79 - 23
CQT70(A)	PHIN	79 - 24
CQT80L(A)	PHIN	79 - 99
CQV60(A)	♦MULB	46 - 12
♦PHIN	RTCF	
	VALG	
CQV60A(A)	♦MULB	46 - 57
♦PHIN	♦RTCF	
	♦VALG	
CQV60AL(A)	♦MULB	46 - 58
♦PHIN	♦RTCF	
	♦VALG	
CQV60AL-III(A)		51 -102
♦MULB	♦PHIN	
♦RTCF	♦VALG	
CQV60AL-IV(A)		52 - 91
♦MULB	♦PHIN	
♦RTCF	♦VALG	
CQV60II(A)	♦MULB	46 - 59
♦PHIN	♦RTCF	
	♦VALG	
CQV60III(A)	♦MULB	49 - 44
♦PHIN	♦RTCF	
	♦VALG	
CQV60L(A)	♦MULB	43 - 24
♦PHIN	♦RTCF	
	♦VALG	
CQV60L-II(A)	♦MULB	46 - 60
♦PHIN	♦RTCF	
	♦VALG	
CQV60L-III(A)		49 - 45
♦MULB	♦PHIN	
♦RTCF	♦VALG	
CQV61	MULB	70 - 61
♦PHIN	RTCF	
	VALG	
CQV61A(A)	♦MULB	70 - 68
♦PHIN	♦RTCF	
	♦VALG	
CQV61A-II(A)	♦MULB	75 - 3
♦PHIN	♦RTCF	
	♦VALG	
CQV61A-III(A)		75 -100
♦MULB	♦PHIN	
♦RTCF	♦VALG	
CQV61AL(A)	♦MULB	70 - 69
♦PHIN	♦RTCF	
	♦VALG	
CQV61AL-II(A)		75 - 4
♦MULB	♦PHIN	
♦RTCF	♦VALG	
CQV61AL-III(A)		75 -101
♦MULB	♦PHIN	
♦RTCF	♦VALG	
CQV61II	♦PHIN	75 - 2

Δ-Registered with JEDEC by this manufacturer

♦-Mfr's data sheet available in microfilm service

1. TYPE No. CROSS INDEX

IN TYPE NUMBER SEQUENCE

TYPE No.	MFRS	Pg&Line
CQV61III	♦PHIN	75 - 98
CQV62(A)	♦MULB	62 -101
♦PHIN	RTCF	
	VALG	
CQV62II(A)	♦MULB	65 - 79
♦PHIN	♦RTCF	
	♦VALG	
CQV62III(A)	♦MULB	66 - 56
♦PHIN	♦RTCF	
	♦VALG	
CQV62L(A)	♦MULB	61 - 66
♦PHIN	♦RTCF	
	♦VALG	
CQV62L-II(A)	♦MULB	65 - 80
♦PHIN	♦RTCF	
	♦VALG	
CQV62L-III(A)		66 - 57
♦MULB	♦PHIN	
♦RTCF	♦VALG	
CQV70	PHIN	44 -105
CQV70-2(A)	♦MULB	55 - 44
♦PHIN	♦RTCF	
	♦VALG	
CQV70-3(A)	♦MULB	49 - 46
♦PHIN	♦RTCF	
	♦VALG	
CQV70A3(A)	♦MULB	49 - 47
♦PHIN	♦RTCF	
	♦VALG	
CQV70A4(A)	♦MULB	51 - 23
♦PHIN	♦RTCF	
	♦VALG	
CQV70A	PHIN	44 -106
CQV70AL3(A)	♦MULB	49 - 48
♦PHIN	♦RTCF	
	♦VALG	
CQV70AL4(A)	♦MULB	51 - 24
♦PHIN	♦RTCF	
	♦VALG	
CQV70AL	PHIN	44 -107
CQV70L2(A)	♦MULB	46 - 61
♦PHIN	♦RTCF	
	♦VALG	
CQV70L3(A)	♦MULB	49 - 49
♦PHIN	♦RTCF	
	♦VALG	
CQV70L	PHIN	44 -108
CQV70U2	PHIN	46 - 62
CQV70U3	PHIN	49 - 50
CQV70U(A)	PHIN	44 -109
CQV70UL2	PHIN	46 - 63
CQV70UL3	PHIN	49 - 51
CQV70UL	PHIN	44 -110
CQV71A2(A)	♦MULB	72 - 53
♦PHIN	♦RTCF	
	♦VALG	
CQV71A3(A)	♦MULB	74 - 30
♦PHIN	♦RTCF	
	♦VALG	
CQV71A	PHIN	71 - 54
CQV71AL2(A)	♦PHIN	72 - 54
CQV71AL3(A)	♦PHIN	74 - 31
CQV71AL	PHIN	71 - 55
CQV72	PHIN	62 - 46
CQV72-2(A)	♦MULB	63 - 10
♦PHIN	♦RTCF	
	♦VALG	
CQV72-3(A)	♦MULB	64 - 92
♦PHIN	♦RTCF	
	♦VALG	
CQV72L2(A)	♦MULB	63 - 11
♦PHIN	♦RTCF	
	♦VALG	
CQV72L3(A)	♦MULB	64 - 93
♦PHIN	♦RTCF	
	♦VALG	
CQV72L	PHIN	62 - 47
CQV80AL3(A)	♦PHIN	49 - 33
CQV80AL4(A)	♦PHIN	51 - 3
CQV80AL(A)	♦MULB	44 - 92
♦PHIN	♦RTCF	
	♦VALG	
CQV80L2(A)	♦MULB	46 - 64
♦PHIN	♦RTCF	
	♦VALG	
CQV80L3(A)	♦MULB	49 - 52
♦PHIN	♦RTCF	
	♦VALG	
CQV80L(A)	♦MULB	44 - 93
♦PHIN	♦RTCF	
	♦VALG	
CQV80U(A)	PHIN	44 - 94
CQV80UL2(A)	PHIN	46 - 34
CQV80UL3(A)	PHIN	49 - '34
CQV80UL(A)	PHIN	44 - 95
CQV81L2(A)	♦PHIN	72 - 38
CQV81L3(A)	♦PHIN	74 - 24
CQV81L(A)	♦MULB	71 - 46
♦PHIN	♦RTCF	
	♦VALG	
CQV82L2(A)	♦PHIN	62 -109
CQV82L3(A)	♦PHIN	64 - 86
CQV82L(A)	♦MULB	62 - 41
♦PHIN	♦RTCF	
	♦VALG	
CQW10(A)	♦MULB	43 - 3
♦PHIN	RTCF	
	VALG	
CQW10A3(A)	♦MULB	49 - 53
♦PHIN	♦RTCF	
	♦VALG	
CQW10A4(A)	♦MULB	51 - 25
♦PHIN	♦RTCF	
	♦VALG	

TYPE No.	MFRS	Pg&Line
CQW10A(A)	♦MULB	45 - 1
♦PHIN	♦RTCF	
	♦VALG	
CQW10AL3(A)	♦PHIN	51 - 26
CQW10AL4(A)	♦PHIN	51 - 27
CQW10AL(A)	♦PHIN	45 - 2
CQW10B2(A)	♦MULB	46 - 65
♦PHIN	♦RTCF	
	♦VALG	
CQW10B3(A)	♦MULB	49 - 54
♦PHIN	♦RTCF	
	♦VALG	
CQW10B(A)	♦MULB	45 - 3
♦PHIN	♦RTCF	
	♦VALG	
CQW10BL2(A)	♦MULB	46 - 66
♦PHIN	♦RTCF	
	♦VALG	
CQW10BL3(A)	♦MULB	49 - 55
♦PHIN	♦RTCF	
	♦VALG	
CQW10BL(A)	♦MULB	45 - 4
♦PHIN	♦RTCF	
	♦VALG	
CQW10II(A)	♦PHIN	46 - 67
CQW10III(A)	♦PHIN	49 - 56
CQW10L(A)	♦MULB	43 - 25
♦PHIN	♦RTCF	
	♦VALG	
CQW10L-II(A)	♦MULB	46 - 68
♦PHIN	♦RTCF	
	♦VALG	
CQW10L-III(A)		49 - 57
♦MULB	♦PHIN	
♦RTCF	♦VALG	
CQW10U2(A)	PHIN	46 - 69
CQW10U3(A)	PHIN	49 - 58
CQW10U(A)	PHIN	45 - 5
CQW10UL2(A)	PHIN	46 - 70
CQW10UL3(A)	PHIN	49 - 59
CQW10UL(A)	PHIN	45 - 6
CQW11B2(A)	♦MULB	72 - 55
♦PHIN	♦RTCF	
	♦VALG	
CQW11B3(A)	♦MULB	74 - 32
♦PHIN	♦RTCF	
	♦VALG	
CQW11B(A)	♦MULB	71 - 56
♦PHIN	♦RTCF	
	♦VALG	
CQW11BL2(A)	♦MULB	72 - 56
♦PHIN	♦RTCF	
	♦VALG	
CQW11BL3(A)	♦MULB	74 - 33
♦PHIN	♦RTCF	
	♦VALG	
CQW11BL(A)	♦MULB	71 - 57
♦PHIN	♦RTCF	
	♦VALG	
CQW12B2(A)	♦MULB	63 - 12
♦PHIN	♦RTCF	
	♦VALG	
CQW12B3(A)	♦MULB	64 - 94
♦PHIN	♦RTCF	
	♦VALG	
CQW12B(A)	♦MULB	62 - 48
♦PHIN	♦VALG	
CQW12BL2(A)	♦MULB	63 - 13
♦PHIN	♦RTCF	
	♦VALG	
CQW12BL3(A)	♦MULB	64 - 95
♦PHIN	♦RTCF	
	♦VALG	
CQW12BL(A)	♦MULB	62 - 49
♦PHIN	♦RTCF	
	♦VALG	
CQW20A	♦PHIN	44 - 96
CQW21(A)	♦MULB	71 - 50
♦PHIN	♦RTCF	
	♦VALG	
CQW22(A)	♦MULB	62 - 58
♦PHIN	♦RTCF	
	♦VALG	
CQW24	MULB	51 - 31
PHIN	RTCF	
	VALG	
CQW24-4	PHIN	51 - 32
CQW24-5	PHIN	52 - 34
CQW24-6	PHIN	53 - 17
CQW24L4	PHIN	51 - 33
CQW24L5	PHIN	52 - 35
CQW24L6	PHIN	53 - 18
CQW24L	PHIN	51 - 34
CQW32	♦MULB	224 - 4
♦PHIN	♦RTCF	
	♦VALG	
CQW51	♦MULB	49 - 30
♦PHIN	♦RTCF	
	VALG	
CQW54(A)	♦MULB	51 - 35
♦PHIN	RTCF	
	VALG	
CQW54-5(A)	♦PHIN	52 - 36
CQW54-6(A)	♦PHIN	53 - 19
CQW54-7(A)	♦PHIN	53 - 78
CQW60(A)	PHIN	44 - 99
CQW60-2(A)	PHIN	46 - 54
CQW60-3(A)	PHIN	49 - 38
CQW60A3(A)	PHIN	49 - 39
CQW60A4(A)	PHIN	51 - 21
CQW60A(A)	PHIN	44 -100
CQW60AL3(A)	PHIN	49 - 40
CQW60AL4(A)	PHIN	51 - 22
CQW60AL(A)	PHIN	44 -101

TYPE No.	MFRS	Pg&Line
CQW60L2(A)	PHIN	46 - 55
CQW60L3(A)	PHIN	49 - 41
CQW60L(A)	PHIN	44 -102
CQW60U2(A)	PHIN	50 - 79
CQW60U3(A)	PHIN	49 - 42
CQW60U(A)	PHIN	44 -103
CQW60UL2(A)	PHIN	46 - 56
CQW60UL3(A)	PHIN	49 - 43
CQW60UL(A)	PHIN	44 -104
CQW61(A)	PHIN	71 - 52
CQW61-2(A)	PHIN	72 - 51
CQW61-3(A)	PHIN	74 - 28
CQW61L2(A)	PHIN	72 - 52
CQW61L3(A)	PHIN	74 - 29
CQW61L(A)	PHIN	71 - 53
CQW62(A)	PHIN	62 - 44
CQW62-2(A)	PHIN	63 - 8
CQW62-3(A)	PHIN	64 - 90
CQW62L2(A)	PHIN	63 - 9
CQW62L3(A)	PHIN	64 - 91
CQW62L(A)	PHIN	62 - 45
CQW89A1	PHIN	86 - 39
CQW89A2	PHIN	86 - 40
CQW89A	PHIN	86 - 41
CQW93(A)	PHIN	52 - 37
CQW93-5(A)	PHIN	53 - 20
CQW93-6(A)	PHIN	54 - 28
CQW93-7(A)	PHIN	53 - 79
CQW95	PHIN	75 - 46
CQW95-5	PHIN	76 - 15
CQW95-6	PHIN	77 - 33
CQW95-7	PHIN	77 - 73
CQW97A5	PHIN	66 - 86
CQW97A6	PHIN	67 - 62
CQW97A7	PHIN	67 -107
CQW97A	PHIN	66 - 23
CQX10	♦MULB	43 - 22
♦PHIN	♦RTCF	
	VALG	
CQX10-1	♦PHIN	44 - 97
CQX10I	♦MULB	44 - 98
♦PHIN	♦RTCF	
	♦VALG	
CQX10II	♦PHIN	46 - 46
CQX10III	♦MULB	49 - 36
♦PHIN	♦RTCF	
	♦VALG	
CQX10IV	♦PHIN	51 - 8
CQX11	♦MULB	70 - 67
♦PHIN	♦RTCF	
	VALG	
CQX11-1	♦PHIN	71 - 49
CQX11II	♦PHIN	72 - 48
CQX11III	♦MULB	74 - 26
♦PHIN	♦RTCF	
	♦VALG	
CQX11IV	♦MULB	75 - 42
♦PHIN	♦RTCF	
	♦VALG	
CQX12	♦MULB	61 - 65
♦PHIN	♦RTCF	
	VALG	
CQX12-1	♦PHIN	62 - 43
CQX12II	♦MULB	63 - 4
♦PHIN	♦RTCF	
	♦VALG	
CQX12III	♦MULB	64 - 88
♦PHIN	♦RTCF	
	♦VALG	
CQX12IV	♦MULB	66 - 19
♦PHIN	♦RTCF	
	♦VALG	
CQX14	♦GESY	86 - 1
CQX15	♦GESY	86 - 2
CQX16	♦GESY	84 - 29
CQX17	♦GESY	84 - 30
CQX18(A)	♦ALGG	83 - 9
CQX19	♦ALGG	87 - 73
CQX24	MULB	53 - 80
♦PHIN	RTCF	
	VALG	
CQX24-8	PHIN	54 - 43
CQX24-9	PHIN	54 - 87
CQX24-10	PHIN	55 - 18
CQX24L8	PHIN	54 - 44
CQX24L9	PHIN	54 - 88
CQX24L10	PHIN	55 - 19
CQX24L	MULB	53 - 81
♦PHIN	RTCF	
	VALG	
CQX28	♦ALGG	42 - 49
CQX29	♦ALGG	70 - 10
CQX30	♦ALGG	61 - 6
CQX31	♦ALGG	78 - 81
CQX32	♦ALGG	79 - 66
CQX46	ALGG	87 - 27
CQX47	♦ALGG	87 - 88
	♦GIC	
CQX48	♦ALGG	85 - 82
CQX51	♦APX	49 - 63
MULB	♦PHIN	
	VALG	
CQX51-4	PHIN	51 - 36
CQX51-5	PHIN	52 - 38
CQX51-6	PHIN	53 - 21
CQX54	♦MULB	53 - 47
PHIN	♦RTCF	
	VALG	
CQX54-7	PHIN	53 - 91
CQX54-8	PHIN	54 - 65
CQX54-9	PHIN	54 - 97
CQX54D5(A)	♦PHIN	53 - 22
CQX54D6(A)	♦PHIN	54 - 29
CQX54D7(A)	♦PHIN	53 - 82

TYPE No.	MFRS	Pg&Line
CQX54D(A)	♦PHIN	51 - 37
CQX54L7(A)	♦PHIN	53 - 83
CQX54L8(A)	♦PHIN	54 - 45
CQX54L9(A)	♦PHIN	54 - 89
CQX54L(A)	♦PHIN	53 - 23
CQX55	MULB	43 - 31
PHIN	RTCF	
	VALG	
CQX56	MULB	43 - 32
PHIN	RTCF	
	VALG	
CQX57	MULB	43 - 33
PHIN	RTCF	
	VALG	
CQX58	MULB	43 - 34
PHIN	RTCF	
	VALG	
CQX61	♦MULB	81 - 13
♦PHIN	♦RTCF	
	♦VALG	
CQX61A(A)	♦MULB	81 - 14
♦PHIN	♦RTCF	
	♦VALG	
CQX62	MULB	81 - 15
PHIN	RTCF	
	VALG	
CQX63	♦MULB	81 - 16
♦PHIN	♦RTCF	
	VALG	
CQX63A(A)	♦MULB	81 - 17
♦PHIN	♦RTCF	
	♦VALG	
CQX64	♦MULB	77 - 34
PHIN	♦RTCF	
	VALG	
CQX64-7	PHIN	77 - 74
CQX64-8	PHIN	78 - 2
CQX64-9	PHIN	78 - 31
CQX64D5(A)	PHIN	76 - 16
CQX64D6(A)	PHIN	77 -105
CQX64D7(A)	PHIN	77 - 75
CQX64D(A)	♦MULB	75 - 47
PHIN	♦RTCF	
	VALG	
CQX64L7(A)	PHIN	77 - 76
CQX64L8(A)	PHIN	78 - 3
CQX64L9(A)	PHIN	78 - 32
CQX64L(A)	♦MULB	77 - 35
♦PHIN	♦RTCF	
	♦VALG	
CQX65	MULB	70 - 73
PHIN	RTCF	
	VALG	
CQX66	MULB	70 - 74
PHIN	RTCF	
	VALG	
CQX67	MULB	70 - 75
PHIN	RTCF	
	VALG	
CQX68	MULB	70 - 76
PHIN	RTCF	
	VALG	
CQX74(A)	♦MULB	67 - 63
♦PHIN	♦RTCF	
	♦VALG	
CQX74-7(A)	PHIN	67 -108
CQX74-8(A)	PHIN	68 - 43
CQX74-9(A)	PHIN	68 - 91
CQX74D5(A)	PHIN	66 - 87
CQX74D6(A)	PHIN	67 - 64
CQX74D7(A)	PHIN	67 -109
CQX74D(A)	♦MULB	66 - 24
♦PHIN	♦RTCF	
	♦VALG	
CQX74L7(A)	PHIN	67 -110
CQX74L8(A)	PHIN	68 - 44
CQX74L9(A)	PHIN	68 - 92
CQX74L(A)	♦MULB	68 - 12
♦PHIN	♦RTCF	
	♦VALG	
CQX74Y(A)	♦MULB	67 -102
♦PHIN	♦RTCF	
	♦VALG	
CQX75	MULB	61 - 73
PHIN	RTCF	
	VALG	
CQX76	MULB	61 - 74
PHIN	RTCF	
	VALG	
CQX77	MULB	61 - 75
PHIN	RTCF	
	VALG	
CQX78	MULB	61 - 76
PHIN	RTCF	
	VALG	
CQY11B	♦APX	83 - 33
♦MULB	♦PHIN	
♦RTCF	VALG	
CQY11C	♦APX	81 - 88
♦MULB	♦PHIN	
♦RTCF	VALG	
CQY24B2	♦APX	47 - 42
♦MULB	♦PHIN	
♦RTCF	♦VALG	
CQY24B3	♦APX	49 - 81
♦MULB	♦PHIN	
♦RTCF	♦VALG	
CQY24B4	♦APX	51 - 93
♦MULB	♦PHIN	
♦RTCF	♦VALG	
CQY24B	♦APX	45 - 17
♦MULB	♦PHIN	
♦RTCF	VALG	

TYPE No.	MFRS	Pg&Line
CQY24BL2(A)	♦APX	47 - 43
♦PHIN	♦RTCF	
	♦VALG	
CQY24BL3(A)	♦APX	49 - 82
♦PHIN	♦RTCF	
	♦VALG	
CQY24BL4(A)	♦APX	51 - 94
♦PHIN	♦RTCF	
	♦VALG	
CQY24BL	♦APX	45 - 18
♦MULB	♦PHIN	
♦RTCF	VALG	
CQY36N	♦ALGG	85 - 83
CQY37N	♦ALGG	85 - 84
CQY49B	♦APX	82 - 35
♦MULB	♦PHIN	
♦RTCF	VALG	
CQY49C	♦APX	84 -109
MULB	♦PHIN	
♦RTCF	VALG	
CQY50	♦APX	82 - 11
♦MULB	♦PHIN	
♦RTCF	VALG	
CQY52	♦APX	82 - 49
MULB	♦PHIN	
♦RTCF	VALG	
CQY54A2	♦PHIN	47 - 32
CQY54A3	♦PHIN	49 - 64
CQY54A	♦PHIN	45 - 19
CQY58A1	MULB	83 - 52
PHIN	RTCF	
CQY58A2	MULB	84 -100
PHIN	RTCF	
	VALG	
CQY80	♦GESY	166 - 26
CQY80N	♦ALGG	166 - 70
CQY80NG	♦ALGG	166 - 71
CQY89A1	♦MULB	87 - 6
♦PHIN	♦RTCF	
	♦VALG	
CQY89A2(A)	♦APX	87 - 7
♦MULB	♦PHIN	
♦RTCF	♦VALG	
CQY89A	APX	86 - 67
♦MULB	♦PHIN	
♦RTCF	VALG	
CQY94B3(A)	♦MULB	74 - 38
♦PHIN	♦RTCF	
	♦VALG	
CQY94B4(A)	♦MULB	75 - 48
♦PHIN	♦RTCF	
	♦VALG	
CQY94B5(A)	♦MULB	76 - 17
♦PHIN	♦RTCF	
	♦VALG	
CQY94B(A)	♦MULB	71 - 59
♦PHIN	♦RTCF	
	♦VALG	
CQY94BL3	PHIN	74 - 39
CQY94BL4	PHIN	75 - 49
CQY94BL5	PHIN	76 - 18
CQY94BL	PHIN	71 - 60
CQY95B3(A)	♦MULB	74 - 40
♦PHIN	♦RTCF	
	♦VALG	
CQY95B4(A)	♦MULB	75 - 50
♦PHIN	♦RTCF	
	♦VALG	
CQY95B5(A)	♦MULB	76 - 19
♦PHIN	♦RTCF	
	♦VALG	
CQY95B(A)	♦MULB	71 - 61
♦PHIN	♦RTCF	
	♦VALG	
CQY96	MULB	62 - 52
♦PHIN	RTCF	
	VALG	
CQY96-3	♦MULB	64 -100
♦PHIN	♦RTCF	
	♦VALG	
CQY96-4	♦MULB	66 - 25
♦PHIN	♦RTCF	
	♦VALG	
CQY96-5	PHIN	66 - 88
CQY96L3(A)	PHIN	64 -101
CQY96L4(A)	♦MULB	66 - 26
♦PHIN	♦RTCF	
	♦VALG	
CQY96L5(A)	♦MULB	66 - 89
♦PHIN	♦RTCF	
	♦VALG	
CQY96L	MULB	62 - 53
♦PHIN	RTCF	
	VALG	
CQY97A3(A)	♦MULB	65 - 14
♦PHIN	♦RTCF	
	♦VALG	
CQY97A4(A)	♦MULB	66 - 27
♦PHIN	♦RTCF	
	♦VALG	
CQY97A5(A)	♦MULB	66 -101
♦PHIN	♦RTCF	
	♦VALG	
CQY97A(A)	♦MULB	62 - 54
♦PHIN	♦RTCF	
	♦VALG	
CQY99	♦GIC	87 - 23
CS2012	♦CHE	236 - 12
CSC12(1)	ASE	137 -109
CSP4.7	♦ASE	147 - 25
CSP7	♦ASE	147 - 27
CSP14	♦ASE	147 - 31
CSP16.5	♦ASE	147 - 33
CSP28	♦ASE	147 - 37

Δ-Registered with JEDEC by this manufacturer

♦-Mfr's data sheet available in microfilm service

1. TYPE No. CROSS INDEX

IN TYPE NUMBER SEQUENCE

TYPE No.	MFRS	Pg&Line
CTR5120A	CLA	129 - 30
CTR5130A	CLA	129 - 34
CTR5140A	CLA	129 - 37
D100PA	♦ALGG	177 - 1
D100PK	♦ALGG	177 - 2
D101PA	♦ALGG	177 - 8
D101PK	♦ALGG	177 - 9
D102PA	♦ALGG	177 - 10
D102PK	♦ALGG	177 - 11
D103PA	♦ALGG	177 - 12
D103PK	♦ALGG	177 - 13
D190PA	♦ALGG	176 - 10
D190PK	♦ALGG	176 - 13
D191PA	♦ALGG	176 - 14
D191PK	♦ALGG	176 - 15
D192PA	♦ALGG	176 - 16
D192PK	♦ALGG	176 - 17
D193PA	♦ALGG	176 - 18
D193PK	♦ALGG	176 - 19
D200PA	♦ALGG	183 - 24
D200PK	♦ALGG	183 - 25
D201PA	♦ALGG	183 - 63
D201PK	♦ALGG	183 - 64
D202PA	♦ALGG	183 - 65
D202PK	♦ALGG	183 - 66
D203PA	♦ALGG	183 - 67
D290PA	♦ALGG	182 - 7
D290PK	♦ALGG	182 - 8
D291PA	♦ALGG	182 - 9
D291PK	♦ALGG	182 - 10
D292PA	♦ALGG	182 - 11
D292PK	♦ALGG	182 - 12
D350PA	♦ALGG	190 - 38
D350PK	♦ALGG	190 - 34
D351PA	♦ALGG	190 - 39
D351PK	♦ALGG	190 - 40
D352PA	♦ALGG	190 - 41
D352PK	♦ALGG	190 - 42
D380PA	♦ALGG	186 - 62
D380PK	♦ALGG	184 - 77
D381PA	♦ALGG	186 - 58
D381PK	♦ALGG	186 - 59
D382PA	♦ALGG	186 - 60
D382PK	♦ALGG	186 - 61
D610P	♦ALGG	92 - 7
D620P	♦ALGG	93 - 64
D630P	♦ALGG	93 - 65
D634P	♦ALGG	93 - 90
D1009	♦REC	175 - 48
D3001PA	ALGG	187 -106
D5012-11	♦REC	188 - 61
D5012-12	♦REC	188 - 62
D5022-11	♦REC	188 - 97
D5022-12	♦REC	188 - 98
D5032-11	♦REC	188 - 88
D5032-12	♦REC	188 - 89
D5042-11	♦REC	189 - 64
D5042-12	♦REC	189 - 65
D5042R11	♦REC	189 - 66
D5042R12	♦REC	189 - 67
D5340-5	♦CRS	207 - 13
D5340-6	♦CRS	207 - 14
D5340G	♦CRS	207 - 15
D5340M	CRS	207 - 16
D5340X	CRS	207 - 17
D5345-5	♦CRS	207 - 18
D5345-6	♦CRS	207 - 19
D5345G	♦CRS	207 - 20
D5345M	CRS	207 - 21
D5345X	CRS	207 - 22
D5360-5	♦CRS	207 - 24
D5360-6	♦CRS	207 - 25
D5360G	♦CRS	207 - 26
D5360M	CRS	207 - 27
D5360X	CRS	207 - 28
D24001	♦MER	233 - 30
D24002	♦MER	233 - 31
DBM20	♦DTL	95 - 1
DBP002G	♦SHL	89 - 95
DBP002R	♦SHL	89 - 66
DBP002RG	♦SHL	89 - 55
DBP002Y	♦SHL	89 - 84
DBP010G	♦SHL	90 - 20
DBP010R	♦SHL	89 -110
DBP010Y	♦SHL	90 - 14
DBP220G	♦SHL	90 - 71
DBP220R	♦SHL	90 - 40
DBP220Y	♦SHL	90 - 57
DBR001E	♦SHL	89 - 72
DBR001G	♦SHL	89 - 91
DBR001R	♦SHL	89 - 62
DBR001Y	♦SHL	89 - 80
DBS040G	♦SHL	90 - 97
DBS040R	♦SHL	90 - 91
DC95A2	♦NEI	226 - 41
DC165A2	♦NEI	226 - 42
DC169A2	♦NEI	228 - 7
DC169A2A	♦NEI	227 -110
DC205A2	♦NEI	226 - 43
DC209A2	♦NEI	228 - 8
DC209B2	♦NEI	227 -102
DC209B2A	♦NEI	227 - 95
DC269A2	♦NEI	227 - 99
DC326A2	♦NEI	226 - 47
DC329A2	♦NEI	227 -103
DC405A2	♦NEI	226 - 48
DC406A2	♦NEI	226 - 49
DC409A2	♦NEI	227 -104
DC610A2	♦NEI	228 - 44
DC806A2	♦NEI	227 - 10
DC809B2	♦NEI	227 - 96
DC1015A2	♦NEI	229 - 35
DC1612B2	♦NEI	228 - 64
DC1612B2A	♦NEI	228 - 61

TYPE No.	MFRS	Pg&Line
DC1612C2	♦NEI	228 - 65
DC1612C2A	♦NEI	228 - 62
DC1612D2	♦NEI	228 - 63
DC2015B2	♦NEI	229 - 59
DC16055A	♦NEI	226 - 30
DC20026A2	♦NEI	226 - 29
DC40026B2	♦NEI	226 - 82
DC40046A	♦NEI	226 - 38
DC40066A	♦NEI	226 - 39
DC40125A	NEI	226 - 5
DC80025B	NEI	226 - 78
DDK528P	♦MER	124 - 51
DDV325	♦MER	124 - 97
DE210	DECO	227 - 74
DE220	DECO	228 - 1
DE232	DECO	227 - 7
DE420A	DECO	228 - 2
DE432A	DECO	226 - 79
DE1000(2)	♦LAD	96 - 10
DF275	♦RET	107 -105
DF350	♦RET	107 -106
DF750	♦RET	107 -107
DIP630	♦REC	225 - 59
DIP630PM	♦REC	225 - 17
DIP631L	♦REC	225 - 60
DIP631R	♦REC	225 - 61
DIP632	♦REC	225 - 62
DIP640	♦REC	225 - 63
DIP640PM	♦REC	225 - 18
DIP641L	♦REC	225 - 64
DIP641R	♦REC	225 - 65
DIP642	♦REC	225 - 66
DIP650	♦REC	225 - 67
DIP650PM	♦REC	225 - 19
DIP651L	♦REC	225 - 68
DIP651R	♦REC	225 - 69
DIP652	♦REC	225 - 70
DIP850	♦REC	225 - 85
DIP850PM	♦REC	225 - 25
DIP851L	♦REC	225 - 86
DIP851R	♦REC	225 - 87
DIP852	♦REC	225 - 88
DIP1050	♦REC	225 - 91
DIP1050A	♦REC	225 - 92
DIP1050PM1	♦REC	225 - 93
DIP1051L	♦REC	225 - 94
DIP1051R	♦REC	225 - 95
DIP1052	♦REC	225 - 96
DIR170	♦LAD	231 - 4
DL330M	♦SIEX	175 - 58
DL340M	♦SIEX	175 - 63
DL430M	♦SIEX	175 -103
DL440M	♦SIEX	175 -102
DL1414	♦SIEG	201 - 86
	TFS	
DL1414T	♦SIEG	201 - 89
	♦SIEX	
DL1416	♦SIEG	201 - 94
DL1416B	♦SIEG	201 -101
	♦SIEX	
DL1416T	♦SIEG	201 - 95
DL1814	♦SIEG	201 - 90
	♦SIEX	
DL2416	♦SIEG	201 - 96
	♦TFS	
DL2416H	♦SIEG	201 - 97
	♦SIEX	
DL2416T	♦SIEG	201 - 98
	♦SIEX	
DL3416	♦SIEG	201 -107
	♦SIEX	
DL3416H	♦SIEG	201 -108
	♦SIEX	
DL3422	♦SIEG	201 -106
	♦SIEX	
DL7650O	♦SIEX	185 - 80
DL7651O	♦SIEX	185 - 81
DL7653O	♦SIEX	185 - 82
DL7656O	♦SIEX	186 - 36
DL7660Y	♦SIEX	186 - 23
DL7661Y	♦SIEX	186 - 24
DL7663Y	♦SIEX	186 - 25
DL7666Y	♦SIEX	186 - 55
DL7670G	♦SIEX	185 - 83
DL7671G	♦SIEX	185 - 84
DL7673G	♦SIEX	185 - 85
DL7676G	♦SIEX	186 - 37
DL7750R	♦SIEX	185 - 86
DL7751R	♦SIEX	185 - 87
DL7756R	♦SIEX	186 - 38
DL7760R	♦SIEX	185 - 88
DLG4137(A)	♦SIEG	202 -106
	♦SIEX	
DLG5735	♦SIEG	200 - 48
	♦SIEX	
DLG5736	♦SIEG	200 - 49
	♦SIEX	
DLG7137	♦SIEG	203 - 1
	♦SIEX	
DLO4135(A)	♦SIEG	202 -107
	♦SIEX	
DLO7135	♦SIEG	203 - 2
	♦SIEX	
DLR5735	♦SIEX	200 - 46
DLR5736	♦SIEG	200 - 47
	♦SIEX	
DM41X40B	♦NEI	229 - 83
DM41X40C	NEI	229 - 82
DM64X64A	♦NEI	229 - 89
DM64X64B	NEI	229 - 87
DM80X80C	NEI	229 - 88
DM128X24A	NEI	229 - 57
DM128X128C	NEI	229 - 84
DM256X64A	NEI	229 - 81

TYPE No.	MFRS	Pg&Line
DM256X256B	NEI	229 - 92
DM258X26B	♦NEI	229 - 67
DM400B	♦NEI	229 - 85
DM3000	♦REC	180 - 71
DM3001	REC	180 - 72
DM6003	♦REC	194 - 72
DM6004	REC	194 - 73
DM6009	REC	194 - 74
DM6010(2)	REC	194 - 75
DM6015	REC	195 - 88
DM6016	REC	195 - 89
DM6021	REC	195 - 90
DM6022	REC	195 - 91
DM10348-03	♦REC	198 -110
DM10348-04	♦REC	198 -109
DMC16106A	♦OPCJ	222 - 19
DMC16106B	♦OPCJ	221 - 58
DMC16106C	♦OPCJ	220 - 94
DMC16117	♦OPCJ	220 - 95
DMC16207	♦OPCJ	220 - 80
DMC20215	♦OPCJ	220 - 82
DMC32216	♦OPCJ	220 - 77
DMC40209	♦OPCJ	220 - 98
DMC40218	♦OPCJ	220 - 78
DMF605	♦OPCJ	221 -100
DMF606	♦OPCJ	221 -101
DMF608	♦OPCJ	221 -102
DN304	♦STAJ	81 - 18
DN305(1)	♦STAJ	81 - 19
DP2	INRI	137 - 86
DP3	INRI	137 - 93
DR630	REC	225 - 33
DR630EW	REC	225 - 34
DR630NS	REC	225 - 35
DR640	REC	225 - 36
DR640EW	REC	225 - 37
DR640NS	REC	225 - 38
DR650	REC	225 - 39
DR650EW	REC	225 - 40
DR650NS	REC	225 - 41
DT25	♦EGG	105 - 23
DT110	♦EGG	105 - 38
E1000	♦MAI	40 - 84
E1010	♦MAI	45 - 27
E1020	♦MAI	54 - 86
E1020F	♦MAI	54 - 85
E1100	♦MAI	59 - 91
E1200(1)	♦MAI	67 -106
E1300	♦MAI	76 - 11
E1500	♦MAI	86 - 74
E1500F	♦MAI	86 - 75
E1510	♦MAI	85 - 28
E1510F	♦MAI	85 - 29
E1520	♦MAI	86 - 24
E1520F	♦MAI	86 - 25
E2000	♦MAI	96 -110
E2004	♦MAI	97 - 36
E2500	♦MAI	97 - 96
E2502	♦MAI	97 -108
E2525	♦MAI	98 - 37
E5012-11	♦REC	188 - 63
E5012-12	♦REC	188 - 64
E5022-11	♦REC	188 - 99
E5022-12	♦REC	188 -100
E5032-11	♦REC	188 - 90
E5032-12	♦REC	188 - 91
E5042-11	♦REC	189 - 68
E5042-12	♦REC	189 - 69
E5042R11	♦REC	189 - 70
E5042R12	♦REC	189 - 71
E5100	♦MAI	104 - 73
E5102	♦MAI	104 - 77
E5103	♦MAI	104 - 79
E5104	♦MAI	106 - 7
E5106	♦MAI	105 - 98
E5108	♦MAI	106 - 9
E7460	♦MAI	108 -105
E7462	MAI	108 - 82
E7464	MAI	108 - 83
E7466	MAI	108 - 84
E7468	MAI	108 - 69
E10416A	REC	196 - 44
ED102RKB	♦SPR	40 - 61
ED107R	SPR	41 - 88
ED700Y	SPR	64 - 84
EL1CL3	♦KODC	84 - 43
EL1CL3H	♦KODC	84 -104
EL1K3	♦CENB	85 - 60
	♦KODC	
EL1KL3	♦KODC	87 - 24
EL1KL5	♦KODC	86 - 95
EL1KL6	♦KODC	86 - 16
EL1L1	♦CENB	87 - 59
	♦KODC	
EL1L2	♦KODC	87 - 25
EL1ML2	♦CENB	84 - 94
	♦KODC	
EL6KL3	♦KODC	87 - 26
EL6KL5	♦KODC	86 - 96
EL6SKL	♦KODC	84 - 21
EL6SKLT	♦KODC	83 - 13
EL7L	♦KODC	84 - 17
EL23F	♦KODC	84 - 60
EL45F	♦KODC	84 - 53
EL-SKL	♦KODC	87 - 22
EL-SKLT	♦KODC	88 - 79
EM1502	♦RTN	130 - 92
EM1507	♦RTN	131 - 41
EM1508	♦RTN	130 - 93
ER300	♦STAJ	55 - 26
ER500	♦STAJ	55 - 32
ER700	♦STAJ	55 - 37
ESAA3401	♦STAJ	59 - 89
ESAA3431	♦STAJ	59 - 71

TYPE No.	MFRS	Pg&Line
ESAA5501	♦STAJ	60 - 50
ESAA5531	♦STAJ	59 - 90
ESAA5603	♦STAJ	60 - 23
ESAA5633	♦STAJ	59 -107
ESAY3401	♦STAJ	68 - 5
ESAY3431	♦STAJ	67 -100
ESAY5501	♦STAJ	68 -102
ESAY5531	♦STAJ	68 - 7
ESAY5603	♦STAJ	68 - 75
ESAY5633	♦STAJ	68 - 34
ESBG3401	♦STAJ	77 - 86
ESBG3431	♦STAJ	75 -110
ESBG5501	♦STAJ	78 - 50
ESBG5531	♦STAJ	77 - 21
ESBG5603	♦STAJ	77 - 87
ESBG5633	♦STAJ	77 - 22
ESBR2201	♦STAJ	52 - 29
ESBR3401	♦STAJ	54 - 38
ESBR3431	♦STAJ	53 - 60
ESBR5501	♦STAJ	55 - 4
ESBR5531	♦STAJ	54 - 25
ESBR5603	♦STAJ	54 - 64
ESBR5633	♦STAJ	54 - 26
ESPY3401	♦STAJ	68 - 37
ESPY3431	♦STAJ	68 - 30
ESPY5501	♦STAJ	69 - 15
ESPY5531	♦STAJ	68 - 76
ESPY5603	♦STAJ	68 - 93
ESPY5633	♦STAJ	68 - 77
F0-02-200	♦UDT	104 -102
F0-02-400	♦UDT	104 -103
F0-02E	♦UDT	104 -104
F0-04E	♦UDT	104 - 96
F0-30E	♦UDT	104 - 97
F5D1	♦GESY	86 -107
F5D2	♦GESY	86 - 61
F5D3(2)	GESY	86 - 82
F5E1	♦GESY	86 -108
F5E2	♦GESY	86 - 62
F5E3(2)	GESY	86 - 83
F5F1	♦GESY	82 - 31
F5G1	♦GESY	82 -108
F5380-1	♦CRS	207 - 33
F5380-5	♦CRS	207 - 34
F5380-6	♦CRS	207 - 35
F5380G	♦CRS	207 - 36
F5380M	CRS	207 - 37
F5380X	CRS	207 - 38
FAR4HS	♦LCF	231 - 79
FAT4HS	♦LCF	231 - 80
FCD830C	♦FSC	166 - 78
FCD890	♦FSC	169 - 60
FD511	♦STAJ	121 - 49
FDA548	MER	173 - 9
FDA555	MER	173 - 10
FDG559	MER	173 - 11
FDR13E	♦LCF	231 - 5
FDT13E	♦LCF	231 - 42
FE0101	♦AND	206 -105
FE0101TGB	♦AND	206 - 90
FE0101TGG	♦AND	206 - 91
FE0101TGQ	♦AND	206 - 92
FE0101TGR	♦AND	206 - 93
FE0101TH	♦AND	206 - 94
FE0101THB	♦AND	206 - 95
FE0101THG	♦AND	206 - 96
FE0101THR	♦AND	206 - 97
FE0101TI	♦AND	206 - 98
FE0101TIB	♦AND	206 - 99
FE0101TIG	♦AND	206 -100
FE0101TIQ	♦AND	206 -101
FE0101TIR	♦AND	206 -102
FE0101TJ	♦AND	206 -103
FE0201	♦AND	210 - 85
FE0202	♦AND	211 - 68
FE0202AEQ	♦AND	212 - 67
FE0202TFQ	♦AND	212 - 68
FE0203	♦AND	210 - 86
FE0203ADG	♦AND	211 - 30
FE0203EG	♦AND	211 - 31
FE0204A	♦AND	211 - 66
FE0205	♦AND	211 - 59
FE0206AAQ	♦AND	209 -105
FE0208	♦AND	209 -104
FE0401	♦AND	213 - 37
FE0402	♦AND	211 - 3
FE0402ACG	♦AND	211 - 32
FE0402ADB	♦AND	211 - 33
FE0402DB	♦AND	211 - 34
FE0403	♦AND	209 - 89
FE0403ADG	♦AND	209 -106
FE0403E	♦AND	209 -107
FE0404F	♦AND	220 - 73
FE0405	♦AND	222 - 58
FE0405AAB	♦AND	222 - 65
FE0405AAQ	♦AND	222 - 66
FE0405ACR	♦AND	222 - 67
FE0405ATI	♦AND	222 - 68
FE0405ATIB	♦AND	222 - 69
FE0405TJG	♦AND	222 - 70
FE0405TJQ	♦AND	222 - 71
FE0501	♦AND	214 - 71
FE0501ATIR	♦AND	214 - 99
FE0501EB	♦AND	214 -100
FE0502	♦AND	215 - 78
FE0502ABR	♦AND	215 -100
FE0601	♦AND	217 - 44
FE0601TGB	♦AND	217 - 51
FE0601TGQ	♦AND	217 - 52
FE0602F	♦AND	220 - 74
FE0602THB	♦AND	220 - 72
FE0701	♦AND	218 - 60
FE0701TIQ	♦AND	218 - 72
FE0801	♦AND	208 -101

TYPE No.	MFRS	Pg&Line
FE0801ABB	♦AND	209 - 3
FE0801B	♦AND	209 - 4
FE0801BB	♦AND	209 - 5
FE0801BG	♦AND	209 - 6
FE0801BQ	♦AND	209 - 7
FE0801BR	♦AND	209 - 8
FE0801C	♦AND	209 - 9
FE0801CB	♦AND	209 - 10
FE0801CG	♦AND	209 - 11
FE0801CR	♦AND	209 - 12
FE0801D	♦AND	209 - 13
FE0801DB	♦AND	209 - 14
FE0801DG	♦AND	209 - 15
FE0801DQ	♦AND	209 - 16
FE0801DR	♦AND	209 - 17
FE0801E	♦AND	209 - 18
FE0801EB	♦AND	209 - 19
FE0801EG	♦AND	209 - 20
FE0801EQ	♦AND	209 - 21
FE0801ER	♦AND	209 - 22
FE0801TF	♦AND	209 - 23
FE0801TFB	♦AND	209 - 24
FE0801TFG	♦AND	209 - 25
FE0801TFQ	♦AND	209 - 26
FE0801TFR	♦AND	209 - 27
FE0801TG	♦AND	209 - 28
FE0801TGB	♦AND	209 - 29
FE0801TGG	♦AND	209 - 30
FE0801TGQ	♦AND	209 - 31
FE0801TGR	♦AND	209 - 32
FE0801TH	♦AND	209 - 33
FE0801THB	♦AND	209 - 34
FE0801THG	♦AND	209 - 35
FE0801THR	♦AND	209 - 36
FE0801TI	♦AND	209 - 37
FE0801TIB	♦AND	209 - 38
FE0801TIG	♦AND	209 - 39
FE0801TIQ	♦AND	209 - 40
FE0801TIR	♦AND	209 - 41
FE0801TJ	♦AND	209 - 42
FE0801TJB	♦AND	209 - 43
FE0801TJG	♦AND	209 - 44
FE0801TJQ	♦AND	209 - 45
FE0801TJR	♦AND	209 - 46
FE0802	♦AND	209 - 2
FE0802ATJB	♦AND	209 -108
FE0803	♦AND	207 - 23
FE0804A	♦AND	207 - 94
FE0804J	♦AND	207 - 95
FE1001	♦AND	213 - 59
FE1202A	♦AND	216 - 77
FE1901	♦AND	210 - 74
FE1901ADB	♦AND	210 - 79
FE2201	♦AND	204 -103
FE2201ATFG	♦AND	204 -100
FE2201THR	♦AND	204 -101
FED071X(A)	♦FMI	40 - 7
FED073K1WA	♦FMI	40 - 8
FED078L1JA	♦FMI	81 - 92
FED081X	FMI	84 - 83
FED083L1JA	♦FMI	81 - 93
FED086K1WA	♦FMI	86 - 79
FED086L1JA	♦FMI	81 - 97
FED086L2JA	♦FMI	82 - 3
FED086L3DB	♦FMI	82 - 25
FED086L3JA	♦FMI	81 - 85
FED086L4DB	♦FMI	82 - 92
FED088L1JA	♦FMI	81 - 94
FED130JH	FMI	81 - 71
FED130L1JA	♦FMI	81 - 76
FED131X	FMI	82 - 26
FED150L1JA	♦FMI	81 - 66
FED0501C	SPR	215 -101
FED0501D	SPR	215 -102
FF102	♦TCY	115 - 5
FF108	♦TCY	115 - 6
FF409	♦TCY	115 - 7
FF411	♦TCY	115 - 8
FF412	♦TCY	115 - 9
FF413	♦TCY	115 - 10
FF600	♦TCY	115 - 11
FF617	♦TCY	115 - 12
FF626	♦TCY	115 - 13
FF627	♦TCY	115 - 14
FG24SC1	♦NEI	229 - 65
FG24SD1GLR	NEI	229 - 29
FG24SD1GRY	♦NEI	229 - 30
FG24SG1	NEI	229 - 66
FG28SB1	♦NEI	228 - 73
FG28SB1GR	♦NEI	228 - 74
FG28SD1	♦NEI	229 - 36
FG28SJ1	♦NEI	228 - 92
FG28SL1	♦NEI	228 - 75
FG36A2	♦NEI	226 - 93
FG38C2	♦NEI	227 - 46
FG46A5	♦NEI	226 - 91
FG46C5	NEI	226 - 85
FG47A2	♦NEI	227 - 39
FG48A2	♦NEI	227 - 40
FG48B2	♦NEI	227 - 41
FG48C2	♦NEI	227 - 47
FG48D6	♦NEI	227 - 85
FG48E1	NEI	227 - 48
FG48E1A	♦NEI	227 - 49
FG48K6	NEI	227 - 50
FG48P2	♦NEI	227 - 51
FG48SA1	NEI	225 -101
FG48SD1BGLR	NEI	228 - 58
FG48SD1BGRY	♦NEI	228 - 59
FG48SD1GR	♦NEI	228 - 60
FG48W2	♦NEI	227 - 52
FG48X2	♦NEI	227 - 53
FG48Y2A	♦NEI	227 - 54
FG58E2	♦NEI	227 - 59

Δ-Registered with JEDEC by this manufacturer

♦-Mfr's data sheet available in microfilm service

1. TYPE No. CROSS INDEX

IN TYPE NUMBER SEQUENCE

TYPE No.	MFRS	Pg&Line
FG58G2	NEI	227 - 42
FG78A1	♦NEI	227 - 68
FG78C2	NEI	227 - 43
FG79B6	♦NEI	227 -108
FG79C6	♦NEI	227 -109
FG80SB1GLR	NEI	229 - 70
FG80SB1GRY	♦NEI	227 -106
FG80SB6	♦NEI	229 - 71
FG85A1	NEI	226 - 17
FG85C1	♦NEI	226 - 34
FG85D2	♦NEI	226 - 40
FG85E2	♦NEI	226 - 31
FG94B1	♦NEI	226 - 3
FG94C1	♦NEI	226 - 8
FG94G	NEI	226 - 9
FG95A1	♦NEI	226 - 22
FG95B1	♦NEI	226 - 35
FG95F6	♦NEI	226 - 23
FG95H6	♦NEI	226 - 36
FG95J6	♦NEI	226 - 13
FG95K2	NEI	226 - 24
FG95M1	NEI	226 - 25
FG97C6	♦NEI	227 - 35
FG97D6	♦NEI	227 - 36
FG97L6	♦NEI	227 - 11
FG99A2	♦NEI	228 - 29
FG99C1	NEI	228 - 30
FG99D1	♦NEI	228 - 14
FG99E1	♦NEI	228 - 31
FG100SA1	♦NEI	225 -102
FG100SB1	♦NEI	225 -103
FG101SB	NEI	227 - 63
FG105E1	♦NEI	226 - 27
FG106A2	♦NEI	226 - 32
FG108A1	♦NEI	227 - 75
FG108A1A	NEI	227 - 84
FG108M1	♦NEI	227 - 86
FG115A6	♦NEI	226 - 72
FG115C1	♦NEI	226 - 73
FG115E7	♦NEI	226 - 83
FG115F7	♦NEI	226 - 28
FG116A6	♦NEI	226 - 98
FG116B7	♦NEI	226 - 95
FG116C6	♦NEI	226 - 99
FG116D6	♦NEI	226 - 96
FG117C6	♦NEI	227 - 12
FG117C7	NEI	227 - 19
FG117D6	♦NEI	227 - 13
FG118A1	♦NEI	227 - 87
FG118E7	♦NEI	227 - 77
FG119A1	♦NEI	228 - 32
FG119B7	♦NEI	228 - 15
FG120S1	♦NEI	225 -104
FG124B2	♦NEI	226 - 6
FG125A2	♦NEI	226 - 37
FG126A2	♦NEI	226 -102
FG134A2	♦NEI	226 - 4
FG135B5	♦NEI	226 - 14
FG135C1	♦NEI	226 - 84
FG135E7	♦NEI	226 - 74
FG135F	♦NEI	226 - 18
FG135G	♦NEI	226 - 15
FG136C6	NEI	226 - 16
FG137A1	♦NEI	227 - 21
FG137C6	♦NEI	227 - 20
FG137D6	♦NEI	227 - 14
FG137E7	♦NEI	227 - 15
FG137F6	♦NEI	227 - 16
FG138A1	♦NEI	227 - 88
FG138B7	♦NEI	227 - 89
FG138G7	NEI	227 - 80
FG139A1	♦NEI	228 - 33
FG139A3	♦NEI	228 - 34
FG139D1	♦NEI	228 - 19
FG139E1	♦NEI	228 - 35
FG139E7	♦NEI	228 - 20
FG139F7	♦NEI	228 - 36
FG139N7	NEI	228 - 21
FG144B2	♦NEI	226 - 7
FG146A6	NEI	226 -100
FG157C1	♦NEI	227 - 22
FG157C7	NEI	227 - 17
FG157D7	NEI	227 - 23
FG159A2	♦NEI	228 - 37
FG159B7	♦NEI	228 - 24
FG165A	♦NEI	226 - 19
FG166A2	♦NEI	226 -103
FG169B2	♦NEI	228 - 10
FG169RA2	♦NEI	228 - 25
FG179A2	♦NEI	228 - 38
FG202SA2	♦NEI	225 -105
FG206A2	♦NEI	226 - 92
FG209A2	♦NEI	228 - 3
FG209M2	♦NEI	228 -` 9
FG210B9	♦NEI	228 - 47
FG213B9	♦NEI	229 - 5
FG213C10	♦NEI	228 - 93
FG213D10	NEI	228 - 94
FG326A2	♦NEI	226 -104
FG326B2	♦NEI	226 -101
FG326B2A	NEI	226 -105
FG405A2	NEI	226 - 80
FG410E2	♦NEI	228 - 48
FG410F1	♦NEI	228 - 49
FG412D1	♦NEI	228 - 86
FG413D1	♦NEI	228 - 97
FG415C1	NEI	229 - 41
FG415E6	♦NEI	229 - 37
FG425A1	♦NEI	229 - 75
FG510A1	♦NEI	228 - 50
FG510B1	♦NEI	228 - 41
FG511E6	♦NEI	228 - 57
FG512A1	♦NEI	228 - 87
FG512F1	NEI	228 -102

TYPE No.	MFRS	Pg&Line
FG514A1	♦NEI	229 - 31
FG515B6	♦NEI	229 - 46
FG515B7	NEI	229 - 42
FG515F1	♦NEI	229 - 47
FG516B1	♦NEI	229 - 48
FG518B1	♦NEI	228 - 42
FG520A1	♦NEI	228 - 83
FG610A1	♦NEI	228 - 28
FG612A1	NEI	228 - 79
FG614A1	♦NEI	229 - 32
FG619B1	NEI	228 - 78
FG620A1	♦NEI	228 - 76
FG620F1	♦NEI	229 - 73
FG710B1	NEI	228 - 43
FG710C1	NEI	227 - 44
FG713ES1	♦NEI	229 - 14
FG715B1	NEI	228 - 39
FG715D1	NEI	228 - 40
FG715G2	NEI	229 - 51
FG715RS1	♦NEI	229 - 38
FG816A	♦NEI	229 - 60
FG912E1	♦NEI	228 - 88
FG913B1	♦NEI	228 - 95
FG913ES1	♦NEI	229 - 15
FG914RB1	♦NEI	229 - 33
FG914RB	NEI	229 - 34
FG915R1	NEI	229 - 39
FG1013RS1	♦NEI	229 - 26
FG1115RC1	NEI	229 - 40
FG1210RA1	NEI	228 - 13
FG1211RA1	NEI	228 - 52
FG1213A1	♦NEI	229 - 27
FG1213RB5	♦NEI	229 - 23
FG1213RE1	NEI	229 - 24
FG1213RF1	NEI	229 - 16
FG1215RB6	♦NEI	229 - 54
FG1612A2	NEI	228 - 77
FH5.11	♦STAJ	53 - 77
FH511	STAJ	55 - 31
FID08T42WS	♦FMI	103 - 50
FID13R13ST	♦FMI	105 - 46
FID13R13WX	♦FMI	103 - 81
FIL3C	UDT	105 - 90
FIL3V	UDT	105 - 50
FIL5C	UDT	105 - 99
FIL5V	UDT	105 - 51
FIL20C	UDT	101 - 44
FIL20V	UDT	105 - 52
FIL100C	UDT	101 - 45
FIL100V	UDT	105 - 53
FIL-C4D	UDT	111 - 71
FIL-C10D	UDT	111 - 72
FIL-S2D	UDT	111 - 74
FIL-S4D	UDT	111 - 73
FIL-S9D	UDT	111 - 75
FIP2A13	♦NECJ	228 - 96
FIP2A15S	♦NECJ	230 - 90
FIP4A6	♦NECJ	226 - 94
FIP4A8	♦NECJ	227 - 24
FIP4A8S	♦NECJ	230 - 22
FIP4A13S	♦NECJ	229 - 6
FIP4A15	♦NECJ	229 - 43
FIP4A15A	♦NECJ	230 - 91
FIP4B6S	♦NECJ	226 -107
FIP4B8	♦NECJ	230 - 23
FIP4B8AS	♦NECJ	230 - 24
FIP4B8B	♦NECJ	230 - 25
FIP4B9	♦NECJ	228 - 81
FIP4B13	♦NECJ	229 - 7
FIP4B15S	♦NECJ	230 - 92
FIP4C5	♦NECJ	226 - 61
FIP4C9	♦NECJ	227 - 93
FIP4C9B	♦NECJ	227 - 94
FIP4C13A	♦NECJ	228 - 98
FIP4C13C	♦NECJ	228 - 99
FIP4C15	♦NECJ	230 - 93
FIP4E6S	♦NECJ	226 -108
FIP4E8AS	NECJ	230 - 26
FIP4E8BS	♦NECJ	230 - 27
FIP4E8S	♦NECJ	227 - 55
FIP4E13S	♦NECJ	229 - 8
FIP4F6S	♦NECJ	227 - 1
FIP4F8S	♦NECJ	227 - 56
FIP4F13S	♦NECJ	228 -100
FIP4H5	♦NECJ	229 - 98
FIP4Q8S	♦NECJ	230 - 44
FIP4S8S	♦NECJ	230 - 28
FIP4Y8S	♦NECJ	230 - 29
FIP5A8B	♦NECJ	227 - 60
FIP5A11S	♦NECJ	228 - 54
FIP5A15S	♦NECJ	229 - 44
FIP5B13S	♦NECJ	229 - 9
FIP5B15	♦NECJ	229 - 49
FIP5C8S	♦NECJ	230 - 31
FIP5D8	♦NECJ	230 - 32
FIP5D8S	♦NECJ	227 - 57
FIP5D13A	♦NECJ	228 -101
FIP5D15AS	♦NECJ	230 - 94
FIP5D15S	♦NECJ	230 - 95
FIP5E15S	♦NECJ	229 - 45
FIP5F8S	♦NECJ	227 - 61
FIP5F13	♦NECJ	229 - 10
FIP5G13	♦NECJ	229 - 11
FIP5H13S	♦NECJ	228 - 82
FIP5H15	♦NECJ	229 - 50
FIP5K15S	♦NECJ	230 - 96
FIP6A8A	♦NECJ	227 - 58
FIP6A8B	♦NECJ	227 - 62
FIP6A8R	♦NECJ	227 - 90
FIP6A8S	♦NECJ	227 - 67
FIP6A13	♦NECJ	230 - 87
FIP6A25	♦NECJ	229 - 77
FIP6B12S	♦NECJ	228 - 80
FIP6C8	♦NECJ	227 - 64

TYPE No.	MFRS	Pg&Line
FIP6C13	♦NECJ	228 -104
FIP6C15	♦NECJ	229 - 52
FIP6C15A	♦NECJ	230 - 97
FIP6D15	♦NECJ	229 - 56
FIP6D15A	♦NECJ	230 - 98
FIP6D15B	♦NECJ	230 - 99
FIP6E6	♦NECJ	227 - 2
FIP6F6	♦NECJ	230 - 11
FIP6F8	♦NECJ	230 - 33
FIP6F13	♦NECJ	229 - 17
FIP6L13	♦NECJ	228 -105
FIP7A8AS	♦NECJ	230 - 45
FIP7A8S	♦NECJ	227 - 65
FIP7A13	♦NECJ	228 -106
FIP7A13A	♦NECJ	228 -107
FIP7AM15	♦NECJ	229 - 53
FIP7B8AS	♦NECJ	230 - 46
FIP7B8S	♦NECJ	227 - 69
FIP7B13	♦NECJ	229 - 28
FIP7B25	♦NECJ	229 - 78
FIP7C8S	♦NECJ	227 - 66
FIP7C13	♦NECJ	228 -103
FIP7D8	♦NECJ	227 - 70
FIP7D8A	♦NECJ	230 - 47
FIP7D8F	♦NECJ	230 - 48
FIP7E8S	♦NECJ	227 - 71
FIP7F8S	♦NECJ	227 - 72
FIP7G8	♦NECJ	227 - 73
FIP7G8A	♦NECJ	230 - 49
FIP7G8D	♦NECJ	230 - 50
FIP7P8	♦NECJ	230 - 51
FIP7P8A	NECJ	230 - 52
FIP7Q8	♦NECJ	230 - 53
FIP7Q8A	NECJ	230 - 54
FIP8A5	♦NECJ	226 - 20
FIP8A5AR	♦NECJ	229 - 99
FIP8A5R	♦NECJ	229 -100
FIP8A6R	♦NECJ	230 - 8
FIP8A11	♦NECJ	228 - 55
FIP8B5	♦NECJ	226 - 62
FIP8B11	♦NECJ	228 - 51
FIP9A5	NECJ	229 -101
FIP9A5AR	♦NECJ	229 -102
FIP9A12	♦NECJ	228 - 89
FIP9A12A	♦NECJ	228 - 90
FIP9A13A	♦NECJ	228 -108
FIP9B6	♦NECJ	230 - 9
FIP9B6A	♦NECJ	230 - 10
FIP9B8	♦NECJ	230 - 34
FIP9B8B	♦NECJ	230 - 35
FIP9B8Y	♦NECJ	230 - 36
FIP9B10	♦NECJ	228 - 45
FIP9BM12	♦NECJ	230 - 19
FIP9C5	NECJ	226 - 64
FIP9C10	♦NECJ	230 - 72
FIP9C13	♦NECJ	228 -109
FIP9D5	♦NECJ	229 - 96
FIP9D7	♦NECJ	227 - 25
FIP9F8	♦NECJ	230 - 37
FIP9J5	♦NECJ	226 - 65
FIP9J5A	♦NECJ	226 - 66
FIP9K5	♦NECJ	226 - 67
FIP9K5A	♦NECJ	229 -103
FIP9LM6	♦NECJ	229 -104
FIP10A5R	♦NECJ	226 - 70
FIP10A6R	♦NECJ	227 - 3
FIP10A13	♦NECJ	228 -110
FIP10A20	♦NECJ	230 -102
FIP10AW19Y	♦NECJ	229 - 72
FIP10B13	♦NECJ	229 - 18
FIP10B13A	♦NECJ	229 - 19
FIP10C5R	♦NECJ	226 - 71
FIP10C13	♦NECJ	229 - 1
FIP10D13	♦NECJ	229 - 20
FIP10XM2AA	♦NECJ	230 - 86
FIP11A6A	NECJ	226 - 97
FIP11A13	♦NECJ	229 - 2
FIP11A15	♦NECJ	230 -100
FIP11B8A	NECJ	230 - 55
FIP11B8X	♦NECJ	227 - 91
FIP11B10	♦NECJ	228 - 16
FIP11B10A	NECJ	230 - 73
FIP11B13	♦NECJ	229 - 22
FIP11C8	♦NECJ	227 - 76
FIP11C8A	NECJ	230 - 56
FIP11C8B	NECJ	230 - 57
FIP11D6	♦NECJ	226 -106
FIP11D6A	NECJ	230 - 12
FIP11F6	NECJ	227 - 4
FIP11F10	♦NECJ	230 - 79
FIP12A4	♦NECJ	229 - 94
FIP12A5A	♦NECJ	230 - 3
FIP12A5B	♦NECJ	230 - 4
FIP12A11R	♦NECJ	228 - 84
FIP12A13	♦NECJ	229 - 25
FIP12AW7YS	♦NECJ	227 - 37
FIP12XM2AA	♦NECJ	227 - 92
FIP13A7	♦NECJ	227 - 26
FIP13A7B	♦NECJ	230 - 18
FIP13A10	♦NECJ	230 - 74
FIP13B8	♦NECJ	227 - 81
FIP13B13	♦NECJ	230 - 88
FIP13C5	♦NECJ	226 - 75
FIP13C7	♦NECJ	230 - 20
FIP13C8	♦NECJ	227 - 82
FIP13C8A	♦NECJ	230 - 58
FIP13C10	NECJ	228 - 22
FIP13C10A	♦NECJ	228 - 46
FIP13C10C	♦NECJ	230 - 75
FIP13D8	♦NECJ	227 - 78
FIP13D10	♦NECJ	228 - 17
FIP13D10A	♦NECJ	230 - 76
FIP13D10B	♦NECJ	230 - 77
FIP13E5A	♦NECJ	226 - 76

TYPE No.	MFRS	Pg&Line
FIP13E8	♦NECJ	227 - 83
FIP13F5	♦NECJ	230 - 7
FIP13F7	♦NECJ	227 - 27
FIP13G8	♦NECJ	227 - 79
FIP13H8	♦NECJ	230 - 40
FIP13H10	♦NECJ	228 - 18
FIP13K10	♦NECJ	228 - 23
FIP14A5	♦NECJ	230 - 5
FIP14A8T	♦NECJ	230 - 38
FIP15B7	♦NECJ	227 - 29
FIP16A5CR	♦NECJ	229 -106
FIP16A5R	♦NECJ	229 -107
FIP16A11R	♦NECJ	228 - 85
FIP16B6X	♦NECJ	227 - 5
FIP16B11X	♦NECJ	228 - 56
FIP16B13R	♦NECJ	229 - 4
FIP16C11X	♦NECJ	230 - 81
FIP16D11X	♦NECJ	230 - 82
FIP16X1BA	♦NECJ	230 - 13
FIP16X1CA	♦NECJ	229 -108
FIP16X1EA	♦NECJ	229 - 93
FIP16X1FA	♦NECJ	230 - 70
FIP16X1KA	♦NECJ	229 -109
FIP16XM1BA	♦NECJ	230 - 83
FIP16XM1CA	♦NECJ	230 - 84
FIP16XM1DA	♦NECJ	230 - 85
FIP17A5	♦NECJ	229 - 97
FIP17A10	♦NECJ	228 - 26
FIP17X1AA	♦NECJ	230 - 14
FIP18A14R	♦NECJ	229 - 63
FIP18X2AA	♦NECJ	230 - 71
FIP20A5X	♦NECJ	226 - 44
FIP20B6R	♦NECJ	227 - 6
FIP20B9AR	♦NECJ	230 - 66
FIP20B9X	♦NECJ	228 - 4
FIP20C9X	♦NECJ	228 - 5
FIP20D9X	♦NECJ	227 - 97
FIP20X1AA	♦NECJ	226 - 45
FIP20X1CA	♦NECJ	230 - 59
FIP20X1DB	♦NECJ	230 - 67
FIP20X1EA	♦NECJ	227 - 98
FIP20X1KA	♦NECJ	229 - 61
FIP20X1LB	♦NECJ	229 -110
FIP20X1MA	♦NECJ	230 - 68
FIP20X2AA	♦NECJ	226 - 50
FIP20X2BA	♦NECJ	229 - 62
FIP20X2CA	♦NECJ	228 - 70
FIP20X3AA	♦NECJ	226 - 58
FIP20X4AA	♦NECJ	228 - 71
FIP20XM1AA	♦NECJ	228 - 66
FIP20XM1BA	♦NECJ	228 - 67
FIP24A7X	♦NECJ	227 - 33
FIP24A15YS	♦NECJ	229 - 55
FIP24A17YS	♦NECJ	229 - 69
FIP24AW16YS	♦NECJ	230 -101
FIP24BW16YS	♦NECJ	229 - 64
FIP24DW17YS	♦NECJ	225 -108
FIP24EW17YS	♦NECJ	225 -109
FIP24FW17YS	♦NECJ	225 -110
FIP24X1AA	♦NECJ	227 - 34
FIP26A9X	♦NECJ	227 -100
FIP26X1AA	♦NECJ	227 -101
FIP32A6R	♦NECJ	230 - 15
FIP32A9X	♦NECJ	228 - 6
FIP32A11X	♦NECJ	228 - 68
FIP32B5X	♦NECJ	226 - 86
FIP32B6R	♦NECJ	227 - 8
FIP32D6R	♦NECJ	230 - 16
FIP32X1AA	NECJ	228 - 69
FIP32X1BA	♦NECJ	226 - 87
FIP32X1CA	♦NECJ	230 - 60
FIP32X2AA	♦NECJ	226 - 88
FIP36A10XT	♦NECJ	229 - 79
FIP40A5AX	♦NECJ	227 - 30
FIP40A5X	NECJ	227 - 31
FIP40A9X	NECJ	228 - 11
FIP40B9AX	♦NECJ	230 - 61
FIP40B9X	♦NECJ	227 -105
FIP40C5X	♦NECJ	226 - 51
FIP40C9X	♦NECJ	230 - 62
FIP40E5X	♦NECJ	226 - 52
FIP40X1AA	NECJ	226 - 53
FIP40X1DA	♦NECJ	226 - 54
FIP40X1FB	♦NECJ	230 - 63
FIP40X1GA	♦NECJ	230 - 64
FIP40X1HB	♦NECJ	226 - 55
FIP40X2BA	♦NECJ	228 - 12
FIP40X2CB	♦NECJ	228 - 72
FIP40X2CC	♦NECJ	226 - 60
FIP40X6AA	♦NECJ	226 - 33
FIP42X2AA	♦NECJ	226 - 89
FIP48A8XT	♦NECJ	230 - 41
FIP48AW14YS	♦NECJ	230 - 89
FIP48GX7AA	♦NECJ	230 - 42
FIP60A5X	♦NECJ	226 - 59
FIP60B30T	♦NECJ	229 - 80
FIP72GX7AA	♦NECJ	230 - 43
FIP80A5X	♦NECJ	227 - 32
FIP80A6X	♦NECJ	227 - 18
FIP80X1AA	♦NECJ	230 - 17
FIP80X2AA	♦NECJ	226 - 1
FIP101B8AY	♦NECJ	230 - 21
FIP128GX20AA	♦NECJ	230 -103
FIP160A4X	♦NECJ	226 - 2
FIP180GX48BA	♦NECJ	230 -104
FIP240A4XT	♦NECJ	230 -105
FIP280GX60AA	♦NECJ	230 -106
FIP307	♦MER	231 - 43
FIP325	♦MER	231 - 44
FIP574	♦MER	231 - 45
FL1K1	♦KODC	86 - 42
FL1ML3	♦KODC	85 -107
FLB8009A1	♦FSC	219 -100
FLB8009B1	♦FSC	219 -101

TYPE No.	MFRS	Pg&Line
FLB8009C1	♦FSC	219 -102
FLB8009D1	♦FSC	219 -103
FLB350401	♦FSC	204 - 54
FLB350407	♦FSC	204 - 44
FLB350501	♦FSC	204 - 72
FLB350502	♦FSC	204 -102
FLB350508	♦FSC	204 - 7
FLB350601	♦FSC	205 - 46
FLB350701	♦FSC	206 - 57
FLB450401	♦FSC	204 - 45
FLB450501	♦FSC	204 -104
FLB550503	♦FSC	205 - 27
FLB600301	♦FSC	204 - 38
FLB600506	♦FSC	204 - 81
FLB600601	♦FSC	205 - 47
FLB600602	♦FSC	205 - 48
FLB650401	♦FSC	204 - 55
FLD073WB	♦FMI	96 -104
FLD077B1WM	♦FMI	96 -106
FLD078B1WM	♦FMI	96 - 64
FLD083JA	♦FMI	96 - 57
FLD083WB	♦FMI	96 -103
FLD085A1WH	♦FMI	96 -107
FLD085A1WJ	♦FMI	96 -108
FLD085B1WK	♦FMI	96 -109
FLD130D1SJ	♦FMI	103 - 18
FLD130D1WH	♦FMI	96 - 68
FLD130D1WK	♦FMI	96 - 69
FLD130WA	♦FMI	96 - 70
FLD130WD(A)	FMI	96 - 66
FLD131WA	♦FMI	96 - 71
FLD131WD	♦FMI	96 - 95
FLD133JA	♦FMI	96 - 31
FLD133JD	FMI	96 - 26
FLD133WA	♦FMI	96 - 72
FLD133WD(A)	♦FMI	96 - 67
FM20X1AA-D	♦NECE	226 - 46
FM20X1DB-AC	♦NECE	230 - 69
FM20X2AA-DA	♦NECE	226 - 56
FM40X1AA-B	♦NECE	226 - 57
FM40X1FB-B	♦NECE	230 - 65
FM40X2CB-AA	♦NECE	226 - 90
FM40X6AA-A	♦NECE	230 - 1
FM80X2AA-A	♦NECE	229 - 91
FM180GX48BA-A		229 - 90
	♦NECE	
FN511	♦STAJ	81 - 37
FND100	♦EGG	108 -101
FOD100	♦EGG	231 - 6
FOE380B2	♦TFS	231 - 46
FOE380B	♦TFS	231 - 47
FOR100B	♦TFS	231 - 7
FOR261F1	♦TFS	231 - 8
FOR261F2	♦TFS	231 - 9
FOR361B1	♦TFS	231 - 10
FOR361B2	♦TFS	231 - 11
FOT180B	♦TFS	231 - 48
FPD08R32WS	♦FMI	99 - 5
FPD08R32WX	♦FMI	107 - 2
FPD13R12JT	♦FMI	107 - 33
FPD13R12SR	♦FMI	107 - 35
FPD140M3	♦FMI	99 - 7
FPE800	♦FSC	40 - 9
FPE810	♦FSC	81 - 84
FPT100(1)	♦FSC	115 - 90
FPT100A	♦FSC	117 - 31
FPT100B	♦FSC	117 - 85
FPT110	♦FSC	115 - 91
FPT110A	♦FSC	116 - 93
FPT120	♦FSC	116 - 17
FPT120A	♦FSC	117 - 90
FPT120B	♦FSC	118 - 12
FPT330	♦FSC	116 - 27
FPT510	♦FSC	116 - 50
FPT800	♦FSC	117 - 24
FPT850	♦FSC	122 - 23
FR0505EPL	♦TOI	139 -102
FR1010EPL	♦TOI	139 -105
FR1020EPL	♦TOI	139 -108
FR02505EPL	♦TOI	139 - 98
FRD0094	♦OPCJ	205 - 31
FRD0097A	♦OPCJ	204 - 90
FRD0106	♦OPCJ	207 - 66
FRD0107	♦OPCJ	205 - 88
FRD0109	♦OPCJ	204 - 17
FRD0109D	♦OPCJ	204 - 18
FRD0112	♦OPCJ	204 - 82
FRD0112DA	♦OPCJ	204 - 83
FRD0113	♦OPCJ	205 - 32
FRD0120	♦OPCJ	204 - 60
FRD0122	♦OPCJ	207 - 67
FRD0124	♦OPCJ	205 - 33
FRD0125	♦OPCJ	205 - 9
FRD0126	♦OPCJ	205 - 64
FRD0134	♦OPCJ	205 - 65
FRD0139	♦OPCJ	205 - 49
FRD0146	♦OPCJ	206 - 11
FRD0147	♦OPCJ	207 - 68
FRD0148	♦OPCJ	204 - 59
FRD0150	♦OPCJ	205 - 66
FRD0151	♦OPCJ	205 - 67
FRD0152	♦OPCJ	204 - 64
FRD0153	♦OPCJ	204 - 84
FRD0154	♦OPCJ	205 - 34
FRD0155	♦OPCJ	204 - 61
FRD0164	♦OPCJ	205 - 68
FRD0165	♦OPCJ	206 - 12
FRD0166	♦OPCJ	204 - 65
FRD0169	♦OPCJ	208 - 73
FRD0171	♦OPCJ	205 - 69
FRD0180	♦OPCJ	219 - 78
FRD0188	♦OPCJ	204 - 66
FRD0189	♦OPCJ	205 - 35
FRD0193	♦OPCJ	205 - 55

Δ-Registered with JEDEC by this manufacturer

♦-Mfr's data sheet available in microfilm service

1. TYPE No. CROSS INDEX

IN TYPE NUMBER SEQUENCE

TYPE No.	MFRS	Pg&Line
FRD0195A	♦OPCJ	205 - 70
FRD0195G	♦OPCJ	205 - 71
FRD0195K	♦OPCJ	205 - 72
FRD0195S	♦OPCJ	205 - 73
FRD0196	♦OPCJ	219 - 76
FRD0198	♦OPCJ	205 - 36
FRD0203	♦OPCJ	205 - 37
FRD0204	♦OPCJ	204 - 85
FRD0204S	♦OPCJ	204 - 86
FRD0207	♦OPCJ	205 - 89
FRD0210	♦OPCJ	205 - 74
FRD0211	♦OPCJ	206 - 58
FRD0212	♦OPCJ	206 - 59
FRD0213	♦OPCJ	205 - 90
FRD0214	♦OPCJ	205 - 75
FRD0215	♦OPCJ	206 - 73
FRD0215A	♦OPCJ	206 - 74
FRD0216	♦OPCJ	205 - 56
FRD0217	♦OPCJ	205 - 57
FRD0224	♦OPCJ	205 - 76
FRD0224B	♦OPCJ	205 - 77
FRD0224S	♦OPCJ	205 - 78
FRD0233	♦OPCJ	205 - 79
FRD0234	♦OPCJ	205 - 80
FRD0235	♦OPCJ	205 - 81
FRD0236	♦OPCJ	208 -100
FRD0238	♦OPCJ	205 - 38
FRD0239	♦OPCJ	205 - 29
FRD0240	♦OPCJ	205 - 51
FRD0243	♦OPCJ	206 - 32
FRD0247	♦OPCJ	205 - 58
FRD0247A	♦OPCJ	205 - 59
FRD0251	♦OPCJ	204 - 80
FRD0256	♦OPCJ	206 - 29
FRD0256A	♦OPCJ	206 - 30
FRD0256B	♦OPCJ	206 - 31
FRD0257	♦OPCJ	205 - 30
FRD0264A	♦OPCJ	205 - 91
FRD0267	♦OPCJ	205 - 50
FRD0272	♦OPCJ	205 - 60
FRD0280	♦OPCJ	205 - 39
FRD0280A	♦OPCJ	205 - 40
FRD0285	♦OPCJ	205 - 82
FRD0285A	♦OPCJ	205 - 83
FRD0286	♦OPCJ	205 - 84
FRD0286A	♦OPCJ	205 - 85
FRD0286B	♦OPCJ	205 - 86
FRD0289	♦OPCJ	205 - 41
FRD0289A	♦OPCJ	205 - 42
FRD0292	♦OPCJ	204 - 87
FRD0295	♦OPCJ	206 - 75
FRD0298	♦OPCJ	205 - 92
FRD0303	♦OPCJ	204 - 88
FRD0303B	♦OPCJ	204 - 89
FRD0308	♦OPCJ	205 - 87
FRD1266	♦OPCJ	219 - 77
FRD1352P	♦OPCJ	219 - 79
FRD4187	♦OPCJ	210 - 61
FRD7004	♦OPCJ	221 - 99
FRD7036	♦OPCJ	221 - 57
FRD7037	♦OPCJ	220 - 96
FRD7038	♦OPCJ	220 - 97
FRD7043	♦OPCJ	222 - 28
FRD7047	♦OPCJ	220 - 79
FRD7056	♦OPCJ	222 - 18
FRD7057	♦OPCJ	220 - 81
FRD7058	♦OPCJ	220 - 75
FRD7062	♦OPCJ	220 - 92
FRD7065	♦OPCJ	221 -103
FRD7066	♦OPCJ	221 -104
FRD7069	♦OPCJ	220 - 76
FRD7070	♦OPCJ	220 - 93
FRS1080P	♦OPCJ	214 - 25
FRS1103P	♦OPCJ	210 - 39
FRS1105P	♦OPCJ	214 - 26
FRS1117P	♦OPCJ	214 - 23
FRS1141P	♦OPCJ	208 - 97
FRS1143P	♦OPCJ	208 - 99
FRS1153P	♦OPCJ	204 - 34
FRS1154P	♦OPCJ	214 - 27
FRS1155P	♦OPCJ	204 - 35
FRS1156P	♦OPCJ	204 - 37
FRS1200	♦OPCJ	214 - 24
FRS1320P	♦OPCJ	204 - 36
FRS1412P	♦OPCJ	214 - 28
FRS4188	♦OPCJ	214 - 34
FRTO5	♦TOI	139 - 99
FRTO8	♦TOI	139 -104
FRTO18	♦TOI	139 - 96
FS511	♦STAJ	116 - 56
FSD4179	♦OPCJ	207 - 69
FSD4190	♦OPCJ	207 - 70
FTD2013	♦OPCJ	204 - 46
FTD2021	♦OPCJ	204 - 78
FTD2035	♦OPCJ	204 - 62
FTD2039	♦OPCJ	204 - 79
FTD2048	♦OPCJ	204 - 57
FTD2066	♦OPCJ	204 - 47
FTD2072	♦OPCJ	223 - 4
FTD6056	♦OPCJ	205 - 63
FTS2018	♦OPCJ	204 - 58
FTS2040	♦OPCJ	206 - 56
FU05LD-N(A)	♦MITA	96 - 21
FU06LD(A)	♦MITA	96 - 22
FX41	♦MER	233 - 32
FX45	♦MER	233 - 33
FX47	♦MER	233 - 34
FXD1184	♦OPCJ	206 - 72
FXD1194	♦OPCJ	207 - 74
FXD4063	♦OPCJ	208 - 68
FXD4069	♦OPCJ	208 - 69
FXD4074	♦OPCJ	207 - 65
FXD4084	♦OPCJ	208 - 98
FXD4110	♦OPCJ	208 - 71

TYPE No.	MFRS	Pg&Line
FXD4111	♦OPCJ	206 - 60
FXD4117	♦OPCJ	206 - 28
FXD4164	♦OPCJ	206 - 65
FXD4177	♦OPCJ	207 - 62
FXS1003	♦OPCJ	208 - 64
FXS1017	♦OPCJ	208 - 65
FXS4060	♦OPCJ	207 - 83
FXS4066	♦OPCJ	205 - 54
FXS4068	♦OPCJ	207 - 63
FXS4073	♦OPCJ	214 - 35
FXS4076	♦OPCJ	210 - 55
FXS4079	♦OPCJ	208 - 95
FXS4083	♦OPCJ	205 - 62
FXS4096	♦OPCJ	214 - 21
FXS4109	♦OPCJ	205 - 8
FXS4115	♦OPCJ	208 - 96
FXS4118	♦OPCJ	207 - 64
FXS4120	♦OPCJ	214 - 22
G5R	♦KODC	89 - 12
G32	♦GIC	69 - 81
G900	♦KODC	89 - 21
G1115	♦HPKJ	145 - 3
G1116	♦HPKJ	145 - 9
G1117	♦HPKJ	145 - 24
G1118	♦HPKJ	145 - 4
G1120	♦HPKJ	145 - 25
G1122	♦HPKJ	145 - 8
G1126-02	♦HPKJ	145 - 7
G1127-02	♦HPKJ	145 - 21
G1200	KODC	89 - 28
G1200-2	♦KODC	89 - 29
G1735	♦HPKJ	145 - 5
G1736	♦HPKJ	145 - 16
G1737	♦HPKJ	145 - 36
G1738	♦HPKJ	145 - 6
G1740	♦HPKJ	145 - 37
G1742	♦HPKJ	145 - 14
G1746	♦HPKJ	145 - 13
G1747	♦HPKJ	145 - 23
GB0505EPL	♦TOI	139 - 5
GB1010EPL	♦TOI	139 - 7
GB1020EPL	♦TOI	139 - 8
GB02505EPL	♦TOI	139 - 3
GBG1000	♦SIEG	94 - 19
	♦SIEX	
GBG4850	♦SIEG	94 - 20
	♦SIEX	
GBTO5	♦TOI	139 - 4
GBTO8	♦TOI	139 - 6
GBTO18	♦TOI	139 - 2
GE3009	♦GESY	171 - 86
GE3010	♦GESY	171 - 87
GE3011	♦GESY	171 - 88
GE3012	♦GESY	171 - 89
GE3020	♦GESY	171 - 92
GE3021	♦GESY	171 - 93
GE3022	♦GESY	171 - 94
GE3023	♦GESY	171 - 95
GEAU1-40A	SBR	101 - 31
GEAU1-60A	SBR	101 - 32
GEAU1-520A	SBR	100 - 31
GEAU1-520AS	SBR	100 - 32
GEAU1-40742	SBR	100 - 33
GEAU1-40742HS	SBR	99 - 39
GEAU1-44782	SBR	100 - 34
GEAU1-44782HS	SBR	99 - 40
GEAU2-40A	SBR	101 - 33
GEAU2-60A	SBR	101 - 34
GEAU2-520A	SBR	100 - 20
GEAU2-520AS	SBR	100 - 21
GEAU2-40742	SBR	100 - 22
GEAU2-40742HS	SBR	99 - 41
GEAU2-44782	SBR	100 - 23
GEAU2-44782HS	SBR	99 - 42
GEAU-.5-40A	SBR	101 - 35
GEAU-.5-60A	SBR	101 - 36
GEAU-.5-520A	SBR	100 - 45
GEAU-.5-520AS	SBR	100 - 46
GEAU-.5-40742	SBR	100 - 47
GEAU-.5-40742HS		99 - 43
	SBR	
GEAU-.5-44782	SBR	100 - 48
GEAU-.5-44782HS		99 - 44
	SBR	
GECD1-9145-1	SBR	101 - 37
GECD1-9145-2HS		101 - 38
	SBR	
GECD2-9145-1	SBR	101 - 22
GECD2-9145-2HS		101 - 23
	SBR	
GECD-.5-9145-1		101 - 52
	SBR	
GECD-.5-9145-2HS		101 - 53
	SBR	
GECU1-9145-1	SBR	101 - 46
GECU1-9145-2HS		101 - 10
	SBR	
GECU2-9145-1	SBR	101 - 29
GECU2-9145-2HS		101 - 2
	SBR	
GECU-.5-9145-1		101 - 58
	SBR	
GECU-.5-9145-2HS		101 - 21
	SBR	
GEHG1-9145-1	SBR	102 - 12
GEHG1-9145-2HS		100 - 57
	SBR	
GEHG2-9145-1	SBR	101 - 51
GEHG2-9145-2HS		100 - 44
	SBR	
GEHG-.5-9145-1		102 - 39
	SBR	
GEHG-.5-9145-2HS		101 - 8
	SBR	

TYPE No.	MFRS	Pg&Line
GEPS2001	GESY	165 - 87
GEZN1-9145-1	SBR	101 - 9
GEZN2-9145-1	SBR	101 - 1
GEZN3-9145-1	SBR	100 - 58
GEZN-.5-9145-1		101 - 20
	SBR	
GFH600I	♦GESY	166 - 39
GFH600II	♦GESY	166 - 43
GFH600III	GESY	166 - 31
GFH601I	GESY	167 - 19
GFH601II	GESY	167 - 21
GFH601III	GESY	167 - 22
GFH601IV	GESY	167 - 24
GFOD1A1	♦GESY	231 - 81
GFOD1A2	♦GESY	115 - 29
GFOD1B1	♦GESY	121 - 11
GFOD1B2	♦GESY	121 - 12
GFOE1A1	♦GESY	81 -110
GFOE1A2	♦GESY	81 - 96
GL2AR1	♦SRPJ	40 - 83
GL2HY1	SRPJ	60 - 64
GL2PG1	♦SRPJ	69 - 45
GL2PR1	♦SRPJ	40 - 52
GL3AR1	♦SRPJ	44 - 10
GL3AR2	♦SRPJ	44 - 11
GL3AR3	♦SRPJ	41 - 33
GL3D403	SRPJ	181 - 8
GL3D405	SRPJ	181 - 6
GL3HD1	SRPJ	50 - 80
GL3HD5	SRPJ	52 - 59
GL3HY1	SRPJ	61 - 69
GL3HY2	SRPJ	61 - 70
GL3HY3	SRPJ	60 -100
GL3HY5	SRPJ	63 - 84
GL3N403	SRPJ	181 - 7
GL3N405	SRPJ	181 - 2
GL3N407	SRPJ	181 - 3
GL3NG1	SRPJ	75 - 19
GL3NG5	SRPJ	76 - 61
GL3P401	SRPJ	181 - 4
GL3P403	SRPJ	181 - 5
GL3P405	SRPJ	180 -110
GL3P407	SRPJ	181 - 1
GL3P503	SRPJ	190 - 32
GL3PG1	SRPJ	70 - 49
GL3PG2	♦SRPJ	70 - 50
GL3PG3	♦SRPJ	69 -110
GL3PG5	SRPJ	73 - 63
GL3PR1	SRPJ	43 - 11
GL3PR2	♦SRPJ	43 - 12
GL3PR3	♦SRPJ	41 - 3
GL3PR5	SRPJ	46 - 23
GL4AR2	SRPJ	45 - 23
GL4HY2	SRPJ	61 - 59
GL4NG2	SRPJ	72 - 79
GL4PG2	SRPJ	70 - 90
GL4PR2	SRPJ	41 - 61
GL4R04A	♦SRPJ	182 - 44
GL4R06A	♦SRPJ	193 - 60
GL4R10A	♦SRPJ	198 - 43
GL5AR1	♦SRPJ	47 - 54
GL5AR2	♦SRPJ	47 - 55
GL5HD5	SRPJ	53 - 40
GL5HD10	SRPJ	54 - 59
GL5HY1	SRPJ	61 - 77
GL5HY2	SRPJ	61 - 78
GL5HY5	SRPJ	64 - 50
GL5ND5	SRPJ	79 - 59
GL5NG6	SRPJ	76 - 48
GL5NG10	SRPJ	78 - 16
GL5NP5	SRPJ	79 - 38
GL5PG1	♦SRPJ	71 - 12
GL5PG2	♦SRPJ	71 - 13
GL5PR1	♦SRPJ	43 - 14
GL5PR2	♦SRPJ	43 - 15
GL5PR5	SRPJ	47 - 58
GL5PR6	SRPJ	48 - 85
GL6D201	SRPJ	184 - 43
GL6N201	SRPJ	184 - 42
GL6N202	SRPJ	176 - 64
GL6N402	SRPJ	189 - 95
GL6P201	♦SRPJ	184 - 21
GL6P202	♦SRPJ	176 - 11
GL6P401	SRPJ	198 - 5
GL6R201	♦SRPJ	184 - 22
GL6R202	♦SRPJ	176 - 12
GL8D03D	SRPJ	177 -108
GL8D04	SRPJ	183 - 81
GL8D06	SRPJ	194 - 37
GL8G03	♦SRPJ	177 - 69
GL8G04	♦SRPJ	183 - 22
GL8N03D	SRPJ	177 - 98
GL8N04	SRPJ	183 - 68
GL8N06	SRPJ	194 - 23
GL8P03	♦SRPJ	177 - 70
GL8P03D	SRPJ	177 - 79
GL8P04	♦SRPJ	183 - 23
GL8R03	♦SRPJ	177 - 71
GL8R03D	SRPJ	177 - 78
GL8R06	♦SRPJ	196 - 52
GL8R10	♦SRPJ	198 - 44
GL9ED2	SRPJ	79 - 54
GL9HD2	SRPJ	47 - 21
GL9HD4	SRPJ	47 - 22
GL9HD6	SRPJ	46 -109
GL9HD9	SRPJ	47 - 23
GL9HD10	SRPJ	44 - 3
GL9HD22	SRPJ	43 - 53
GL9HD23	SRPJ	45 - 71
GL9HD24	SRPJ	47 - 28
GL9HP2	SRPJ	79 - 67
GL9HP4	SRPJ	79 - 68
GL9HY2	SRPJ	60 - 77
GL9HY4	SRPJ	61 - 7

TYPE No.	MFRS	Pg&Line
GL9HY6	SRPJ	60 - 70
GL9HY9	SRPJ	60 - 78
GL9HY10	SRPJ	60 - 68
GL9HY22	SRPJ	60 - 67
GL9HY23	SRPJ	60 - 71
GL9HY24	SRPJ	60 - 91
GL9N06	SRPJ	194 - 24
GL9N06A	SRPJ	194 - 25
GL9ND2	SRPJ	79 - 25
GL9ND4	SRPJ	79 - 26
GL9ND24	SRPJ	79 - 27
GL9NG2	SRPJ	71 - 8
GL9NG4	SRPJ	71 - 39
GL9NG6	SRPJ	69 - 94
GL9NG9	SRPJ	69 -107
GL9NG10	SRPJ	70 - 47
GL9NG22	SRPJ	70 - 30
GL9NG23	SRPJ	70 - 91
GL9NG24	SRPJ	72 - 80
GL9NP2	SRPJ	78 - 91
GL9NP4	SRPJ	78 - 92
GL9NP24	SRPJ	78 - 93
GL9PG2	♦SRPJ	69 - 55
GL9PG3	♦SRPJ	69 - 53
GL9PG4	♦SRPJ	69 - 56
GL9PG6	SRPJ	69 - 54
GL9PG9	SRPJ	69 - 57
GL9PG12	SRPJ	69 - 95
GL9PG24	SRPJ	69 - 96
GL9PG34	SRPJ	69 - 97
GL9PR2	♦SRPJ	40 - 87
GL9PR3	♦SRPJ	40 - 85
GL9PR4	♦SRPJ	40 - 88
GL9PR6	SRPJ	40 - 86
GL9PR9	SRPJ	40 - 89
GL9PR10	♦SRPJ	40 - 54
GL9PR12	SRPJ	41 - 62
GL9PR19	SRPJ	41 - 63
GL9PR22	SRPJ	40 - 53
GL9PR23	SRPJ	40 -109
GL9PR24	SRPJ	41 - 64
GL9PR34	SRPJ	41 - 65
GL50G	QTC	88 - 78
GL56	♦SIEG	72 - 50
	♦SIEX	
GL105G11	SRPJ	92 - 57
GL105H5	SRPJ	92 - 44
GL105H11	SRPJ	92 - 45
GL105M11	SRPJ	92 - 59
GL105N5	SRPJ	92 - 67
GL105N11	SRPJ	92 - 60
GL105R5	SRPJ	92 - 11
GL105R11	SRPJ	92 - 8
GL106H5	SRPJ	92 - 91
GL106M5	SRPJ	92 - 96
GL106N5	SRPJ	92 - 97
GL106R5	SRPJ	92 - 81
GL107G12	SRPJ	93 - 7
GL107H12	SRPJ	93 - 3
GL107N12	SRPJ	93 - 9
GL107R12	SRPJ	92 -104
GL107S12	SRPJ	93 - 8
GL112G9	SRPJ	94 - 52
GL112G13	SRPJ	94 - 53
GL112H9	SRPJ	94 - 46
GL112H13	SRPJ	94 - 47
GL112M13	SRPJ	94 - 32
GL112N9	SRPJ	94 - 54
GL112N13	SRPJ	94 - 55
GL112R9	SRPJ	94 - 33
GL112R13	SRPJ	94 - 34
GL112S13	SRPJ	94 - 35
GL112T13	SRPJ	94 - 56
GL350	♦SRPJ	84 - 6
GL410	SRPJ	82 - 85
GL430	SRPJ	82 - 86
GL504	♦SRPJ	82 - 7
GL513F	♦SRPJ	84 - 8
GL514	♦SRPJ	85 - 27
GL520	SRPJ	83 - 60
GL751RS	♦REC	225 - 89
GL951RS	♦REC	225 - 90
GLB2500(A)	♦SIEG	89 - 96
	♦SIEX	
GLB2550(A)	♦SIEG	90 - 81
	♦SIEX	
GLB2800	♦SIEG	90 - 23
	♦SIEX	
GLB2820(A)	♦SIEG	90 -109
	♦SIEX	
GLB2855(A)	♦SIEG	90 - 82
	♦SIEX	
GLB2885(A)	♦SIEG	91 - 18
	♦SIEX	
GP1A01	♦SRPJ	149 - 21
GP1A02	SRPJ	149 - 22
GP1L01	SRPJ	151 - 13
GP1L01F	SRPJ	151 - 14
GP1L02	SRPJ	151 - 27
GP1S01	♦SRPJ	156 - 66
GP1S01F	SRPJ	151 - 15
GP1S02	SRPJ	151 - 16
GP1S03	SRPJ	151 - 17
GP1S04	SRPJ	151 - 18
GP2L01	SRPJ	151 - 19
GP2L01F	SRPJ	151 - 20
GP2L02	SRPJ	151 - 21
GP2S01	SRPJ	151 - 22
GP2S01F	SRPJ	151 - 23
GP2S02	SRPJ	151 - 24
GP2S03	SRPJ	151 - 25
GP411	SRPJ	157 - 85
GP411F	SRPJ	157 - 86
GP415	SRPJ	151 - 26

TYPE No.	MFRS	Pg&Line
GP450	SRPJ	160 - 37
GP450F	SRPJ	160 - 38
GP500	♦SRPJ	159 - 55
GP505	SRPJ	151 - 28
GPD320(2)	♦PLOB	202 -108
GPD340	♦PLOB	202 -110
GPD370	♦PLOB	202 -109
GPD920	♦PLOB	176 - 77
GPD940	♦PLOB	176 - 79
GPD970	♦PLOB	176 - 78
GPD1511	♦SOL	106 -105
GPD1511C325	♦SOL	106 -106
GPD1812	♦SOL	106 -107
GS1020-1	♦MPI	116 - 67
GS1020-2	♦MPI	118 - 30
GS1020-3	♦MPI	118 -106
GS1020-4	♦MPI	119 - 56
GS1030-1	♦MPI	121 - 59
GS1030-2	♦MPI	121 - 91
GS1030-3	♦MPI	122 - 8
GS1140-1	♦MPI	82 - 28
GS1140-2	♦MPI	82 - 55
GS1140-3	♦MPI	83 - 80
GS1140-4	♦MPI	84 - 22
GS2020-1	♦MPI	117 - 54
GS2020-2	♦MPI	117 - 55
GS2020-3	♦MPI	117 - 56
GS2020-4	♦MPI	116 - 54
GS2020-5	♦MPI	118 - 26
GS2020-6	♦MPI	119 - 20
GS2020-7	♦MPI	119 - 78
GS2020-8	♦MPI	119 - 83
GS2020-9	♦MPI	120 - 1
GS2020-11	♦MPI	117 - 53
GS2020-12	♦MPI	117 - 57
GS3020-1	♦MPI	116 -108
GS3020-2	♦MPI	117 - 98
GS3020-3	♦MPI	118 - 72
GS3020-4	♦MPI	119 - 35
GS3030-1	♦MPI	121 - 4
GS3030-2	♦MPI	121 - 5
GS3030-3	♦MPI	121 - 6
GS3040-1	♦MPI	82 - 22
GS3040-2	♦MPI	82 - 47
GS3040-3	♦MPI	83 - 14
GS3040-4	♦MPI	84 - 2
GS4021-1	♦MPI	117 - 32
GS4021-2	♦MPI	118 - 91
GS4021-3	♦MPI	119 - 75
GS4021-4	♦MPI	119 -106
GS4123-1	♦MPI	119 - 21
GS4123-2	♦MPI	120 - 14
GS4123-3	♦MPI	120 - 23
GS4123-4	♦MPI	120 - 28
GS5040-1	♦MPI	84 - 67
GS5040-2	♦MPI	85 - 40
GS5040-3	♦MPI	85 - 81
GS5040-4	♦MPI	86 - 3
H11A1	♦GESY	165 - 46
♦MOTA	PHIN	
	♦SIEX	
H11A2	♦GESY	165 - 5
♦MOTA	OTK	
	♦PHIN	
H11A3	♦GESY	165 - 43
♦MOTA	OTK	
	PHIN	
H11A4	♦GESY	165 - 38
♦MOTA	OTK	
	PHIN	
H11A5	♦GESY	164 - 67
♦MOTA	MULB	
OTK	PHIN	
RTCF	VALG	
H11A10	♦GESY	164 -105
H11A520	♦GESY	166 - 79
♦MOTA	OTK	
H11A550	♦GESY	166 - 86
♦MOTA	OTK	
H11A5100	♦GESY	166 - 94
♦MOTA	OTK	
H11AA1	♦GESY	167 - 77
MOTA	OTK	
♦SIEG	♦SIEX	
H11AA2	♦GESY	164 -106
MOTA	OTK	
H11AA3	GESY	165 - 72
MOTA	OTK	
H11AA4	GESY	165 - 80
MOTA	OTK	
H11AG1	GESY	166 - 33
	OTK	
H11AG2	GESY	166 - 32
	OTK	
H11AG3	GESY	165 - 81
	OTK	
H11AV1	♦GESY	167 - 53
MOTA	OTK	
H11AV1A	♦GESY	167 - 54
	MOTA	
H11AV2	♦GESY	167 - 51
MOTA	OTK	
H11AV2A	♦GESY	167 - 52
	MOTA	
H11AV3	♦GESY	167 - 49
MOTA	OTK	
H11AV3A	♦GESY	167 - 50
	MOTA	
H11B1	♦GESY	169 - 41
♦MOTA	MULB	
OTK	PHIN	
RTCF	VALG	
H11B2	♦GESY	169 - 16
cont.next page		

Δ-Registered with JEDEC by this manufacturer

♦-Mfr's data sheet available in microfilm service

1. TYPE No. CROSS INDEX

IN TYPE NUMBER SEQUENCE

TYPE No.	MFRS	Pg&Line
H11B2		
(cont.)	♦MOTA	
MULB	OTK	
PHIN	RTCF	
	VALG	
H11B3	♦GESY	169 - 13
♦MOTA	MULB	
OTK	PHIN	
RTCF	VALG	
H11B255	♦GESY	169 - 8
♦MOTA	MULB	
PHIN	RTCF	
	VALG	
H11BX522	♦GESY	169 - 9
H11C1	♦GESY	171 - 20
♦MOTA	OTK	
H11C2	♦GESY	171 - 17
♦MOTA	OTK	
H11C3	♦GESY	171 - 7
♦MOTA	OTK	
H11C4(A)	♦GESY	171 - 45
♦MOTA	OTK	
♦SIEG	♦SIEX	
H11C5(A)	♦GESY	171 - 46
♦MOTA	OTK	
♦SIEG	♦SIEX	
H11C6(A)	♦GESY	171 - 47
♦MOTA	OTK	
♦SIEG	♦SIEX	
H11D1	♦GESY	165 - 64
♦MOTA	OTK	
H11D2	♦GESY	165 - 6
♦MOTA	OTK	
H11D3	♦GESY	165 - 7
♦MOTA	OTK	
H11D4	♦GESY	164 -107
♦MOTA	OTK	
H11F1	♦GESY	127 - 56
	OTK	
H11F2	♦GESY	127 - 57
	OTK	
H11F3	♦GESY	127 - 55
	OTK	
H11G1	♦GESY	169 - 58
♦MOTA	OTK	
H11G2	♦GESY	169 - 59
♦MOTA	OTK	
H11G3	♦GESY	169 - 34
♦MOTA	OTK	
H11G45	♦GESY	169 - 72
	OTK	
H11G46	♦GESY	169 - 73
	OTK	
H11J1	♦GESY	171 - 84
MOTA	OTK	
H11J2	♦GESY	171 - 85
MOTA	OTK	
H11J3	♦GESY	171 - 65
MOTA	OTK	
H11J4	♦GESY	171 - 66
MOTA	OTK	
H11J5	♦GESY	171 - 64
MOTA	OTK	
H11L1	♦GESY	173 - 61
MOTA	OTK	
H11L2	♦GESY	173 - 62
MOTA	OTK	
H11L3	GESY	173 - 63
	OTK	
H21A1	♦FSC	155 - 12
♦GESY	♦MOTA	
H21A2	♦FSC	156 - 67
♦GESY	♦MOTA	
H21A3	♦FSC	157 - 11
♦GESY	♦MOTA	
H21A4	♦GESY	155 - 13
H21A5	♦GESY	156 - 68
H21A6	♦GESY	157 - 12
H21B1	♦FSC	157 - 80
♦GESY	♦MOTA	
H21B2	♦FSC	157 - 98
♦GESY	♦MOTA	
H21B3	♦FSC	158 - 2
♦GESY	♦MOTA	
H21B4	♦GESY	156 - 62
H21B5	♦GESY	157 - 92
H21B6	♦GESY	158 - 3
H21L1	♦GESY	151 - 11
H21L2	♦GESY	151 - 8
H22A1	♦FSC	155 - 14
♦GESY	♦MOTA	
H22A2	♦FSC	156 - 69
♦GESY	♦MOTA	
H22A3	♦FSC	157 - '13
♦GESY	♦MOTA	
H22A4	♦GESY	155 - 15
H22A5	♦GESY	156 - 70
H22A6	♦GESY	157 - 14
H22B1	♦FSC	157 - 81
♦GESY	♦MOTA	
H22B2	♦FSC	157 - 99
♦GESY	♦MOTA	
H22B3	♦FSC	158 - 4
♦GESY	♦MOTA	
H22B4	♦GESY	156 - 63
H22B5	♦GESY	157 - 93
H22B6	♦GESY	158 - 5
H22L1	♦GESY	151 - 12
H22L2	♦GESY	151 - 9
H23A1	♦GESY	159 - 21
H23A2	♦GESY	159 - 35
H23B1	♦GESY	159 - 22
H23L1	♦GESY	159 - 33
H24A1	♦GESY	167 - 58

TYPE No.	MFRS	Pg&Line
H24A2	♦GESY	167 - 55
H24B1	♦GESY	169 - 74
H24B2	♦GESY	169 - 75
H74A1	♦GESY	164 -100
H74C1	♦GESY	171 - 8
	MOTA	
H74C2	♦GESY	171 - 12
H1000(1)	♦STAJ	55 - 40
H2000	♦STAJ	55 - 45
H2535-5	CRS	211 - 28
H2535-6	CRS	211 - 29
H2570	HITJ	222 - 14
H2571	HITJ	222 - 16
H2572	HITJ	222 - 17
H3000	♦STAJ	55 - 46
H5535-5	♦CRS	211 - 5
H5535-6	♦CRS	211 - 6
H5535G	♦CRS	211 - 7
H5535M	CRS	211 - 8
H5535X	CRS	211 - 9
H5540-5	♦CRS	211 - 91
H5540-6	♦CRS	211 - 92
H5540G	♦CRS	211 - 93
H5540M	CRS	212 - 1
H5540X	CRS	212 - 2
H5545-5	♦CRS	212 - 17
H5545-6	♦CRS	212 - 18
H5545G	♦CRS	212 - 19
H5545M	CRS	212 - 20
H5545X	CRS	212 - 21
H5560G	CRS	213 - 49
H5560M	CRS	213 - 50
H5560X	CRS	213 - 51
HAD1100A	♦EGG	124 - 64
HAV4000A	♦BEC	124 - 79
HB233	BEC	224 - 15
HB332	BEC	224 - 22
HB333	BEC	224 - 24
HB352	BEC	224 - 36
HB353	BEC	224 - 43
HB356	♦BEC	224 - 49
HBCS1100	♦HPA	160 - 43
HCPL1930	♦HPA	173 - 21
HCPL1931	♦HPA	173 - 22
HCPL2200	♦HPA	173 - 32
HCPL2300	♦HPA	173 - 19
HCPL2400	♦HPA	173 - 97
HCPL2502	♦HPA	173 -104
HCPL2503	♦HPA	164 - 9
HCPL2530	♦HPA	173 - 89
HCPL2531	♦HPA	173 - 90
HCPL2533	♦HPA	173 - 91
HCPL2601	♦HPA	173 - 31
	RSCB	
HCPL2602	♦HPA	173 - 8
HCPL2630	♦HPA	173 - 28
HCPL2631	♦HPA	173 - 18
HCPL2730	♦HPA	173 - 83
HCPL2731	♦HPA	173 - 84
HCPL3700	♦HPA	173 - 88
	RSCB	
HCPL4100	♦HPA	173 - 20
HCPL4200	♦HPA	173 - 34
HCPL4502	♦HPA	174 - 3
HCPL5700	♦HPA	174 - 1
HCPL5701	♦HPA	174 - 2
HCPL5730	♦HPA	173 - 85
HCPL5731	♦HPA	173 - 86
HD1075G	♦SIEG	176 -107
	♦SIEX	
HD1075O	♦SIEG	177 - 18
	♦SIEX	
HD1075R	♦SIEG	177 - 16
	♦SIEX	
HD1075Y	♦SIEG	177 - 30
	♦SIEX	
HD1076G	SIEX	176 - 80
HD1076O	SIEX	176 - 81
HD1076R	SIEX	176 - 84
HD1077G	♦SIEG	176 -108
	♦SIEX	
HD1077O	♦SIEG	177 - 19
	♦SIEX	
HD1077R	♦SIEG	177 - 17
	♦SIEX	
HD1077Y	♦SIEG	177 - 31
	♦SIEX	
HD1078G	SIEX	176 - 82
HD1078O	SIEX	176 - 83
HD1078R	SIEX	176 - 85
HD1078Y	SIEX	176 - 86
HD1105G	♦SIEG	182 - 57
	♦SIEX	
HD1105O	♦SIEG	182 - 58
	♦SIEX	
HD1105R	♦SIEG	182 - 59
	♦SIEX	
HD1105Y	♦SIEG	182 - 77
	♦SIEX	
HD1106G	SIEX	182 - 60
HD1106O	SIEX	182 - 47
HD1106R	SIEX	185 - 5
HD1106Y	SIEX	182 - 49
HD1107G	♦SIEG	182 - 61
	♦SIEX	
HD1107O	♦SIEG	182 - 62
	♦SIEX	
HD1107R	♦SIEG	182 - 63
	♦SIEX	
HD1107Y	♦SIEG	182 - 78
	♦SIEX	
HD1108G	SIEX	182 - 64
HD1108O	SIEX	182 - 48
HD1108R	SIEX	185 - 6

TYPE No.	MFRS	Pg&Line
HD1108Y	SIEX	182 - 50
HD1131G	♦SIEX	190 -109
HD1131O	♦SIEX	190 -110
HD1131R	♦SIEX	191 - 1
HD1131Y	♦SIEX	190 -105
HD1132G	♦SIEX	190 - 97
HD1132O	♦SIEX	191 - 2
HD1132R	♦SIEX	191 - 3
HD1132Y	♦SIEX	190 -106
HD1133G	♦SIEX	191 - 4
HD1133O	♦SIEX	191 - 5
HD1133R	♦SIEX	191 - 6
HD1133Y	♦SIEX	190 -107
HD1134G	♦SIEX	190 - 98
HD1134O	♦SIEX	191 - 7
HD1134R	♦SIEX	191 - 8
HD1134Y	♦SIEX	190 -108
HDSP0760	♦HPA	202 - 31
HDSP0761	♦HPA	202 - 32
HDSP0762	♦HPA	202 - 33
HDSP0763	♦HPA	202 - 14
HDSP0770	♦HPA	202 - 57
HDSP0771	♦HPA	202 - 58
HDSP0772	♦HPA	202 - 59
HDSP0773	♦HPA	202 - 60
HDSP0781	♦HPA	202 - 73
HDSP0781TXV	♦HPA	202 - 74
HDSP0781TXVB	♦HPA	202 - 34
HDSP0782	♦HPA	202 - 35
HDSP0782TXV	♦HPA	202 - 36
HDSP0782TXVB	♦HPA	202 - 37
HDSP0783	♦HPA	202 - 38
HDSP0783TXV	♦HPA	202 - 39
HDSP0783TXVB	♦HPA	202 - 40
HDSP0784	♦HPA	202 - 41
HDSP0784TXV	♦HPA	202 - 42
HDSP0784TXVB	♦HPA	202 - 43
HDSP0791	♦HPA	202 - 61
HDSP0791TXV	♦HPA	202 - 62
HDSP0791TXVB	♦HPA	202 - 63
HDSP0792	♦HPA	202 - 64
HDSP0792TXV	♦HPA	202 - 65
HDSP0792TXVB	♦HPA	202 - 66
HDSP0793	♦HPA	202 - 67
HDSP0793TXV	♦HPA	202 - 68
HDSP0793TXVB	♦HPA	202 - 69
HDSP0794	♦HPA	202 - 70
HDSP0794TXV	♦HPA	202 - 71
HDSP0794TXVB	♦HPA	202 - 72
HDSP0860	♦HPA	202 - 50
HDSP0861	♦HPA	202 - 51
HDSP0862	♦HPA	202 - 52
HDSP0863	♦HPA	202 - 13
HDSP0881	♦HPA	202 - 44
HDSP0882	♦HPA	202 - 45
HDSP0883	♦HPA	202 - 46
HDSP0883TXVB	♦HPA	202 - 53
HDSP0884	♦HPA	202 - 54
HDSP0884TXV	♦HPA	202 - 55
HDSP0884TXVB	♦HPA	202 - 56
HDSP0960	♦HPA	202 - 47
HDSP0961	♦HPA	202 - 48
HDSP0962	♦HPA	202 - 49
HDSP0963	♦HPA	202 - 12
HDSP2000	♦HPA	202 - 82
HDSP2001	♦HPA	202 - 83
HDSP2002	♦HPA	202 - 87
HDSP2003	♦HPA	200 - 1
HDSP2010	♦HPA	199 -108
HDSP2010TXV	♦HPA	199 -109
HDSP2010TXVB	♦HPA	199 -110
HDSP2300	♦HPA	202 - 88
HDSP2301	♦HPA	202 - 89
HDSP2302	♦HPA	202 - 90
HDSP2303	♦HPA	202 - 92
HDSP2310	♦HPA	200 - 3
HDSP2310TXV	♦HPA	200 - 4
HDSP2310TXVB	♦HPA	200 - 5
HDSP2311	♦HPA	200 - 6
HDSP2311TXV	♦HPA	200 - 7
HDSP2311TXVB	♦HPA	200 - 8
HDSP2312	♦HPA	200 - 9
HDSP2312TXV	♦HPA	200 - 10
HDSP2312TXVB	♦HPA	200 - 11
HDSP2381	♦HPA	202 - 93
HDSP2382	♦HPA	202 - 91
HDSP2383	♦HPA	202 - 94
HDSP2416	♦HPA	202 - 84
HDSP2424	♦HPA	202 - 85
HDSP2432	♦HPA	202 - 86
HDSP2440	♦HPA	199 -107
HDSP2450	♦HPA	200 - 12
HDSP2450TXV	♦HPA	200 - 13
HDSP2450TXVB	♦HPA	200 - 14
HDSP2451	♦HPA	200 - 16
HDSP2451TXV	♦HPA	200 - 17
HDSP2451TXVB	♦HPA	200 - 18
HDSP2452	♦HPA	200 - 20
HDSP2452TXV	♦HPA	202 -105
HDSP2452TXVB	♦HPA	202 -104
HDSP2490	♦HPA	200 - 15
HDSP2491	♦HPA	200 - 19
HDSP2492	♦HPA	200 - 21
HDSP2493	♦HPA	200 - 23
HDSP3350	♦HPA	182 - 51
HDSP3351	♦HPA	182 - 52
HDSP3353	♦HPA	182 - 53
HDSP3356	♦HPA	182 - 54
HDSP3400	♦HPA	197 - 73
HDSP3401	♦HPA	197 - 74
HDSP3403	♦HPA	197 - 75
HDSP3405	♦HPA	197 - 76
HDSP3406	♦HPA	197 - 10
HDSP3530	♦HPA	179 - 97

TYPE No.	MFRS	Pg&Line
HDSP3531	♦HPA	179 - 98
HDSP3533	♦HPA	178 - 14
HDSP3536	♦HPA	177 - 41
HDSP3600	♦HPA	179 - 86
HDSP3601	♦HPA	179 - 87
HDSP3603	♦HPA	178 - 12
HDSP3606	♦HPA	179 - 88
HDSP3730	♦HPA	185 - 97
HDSP3731	♦HPA	185 - 98
HDSP3733	♦HPA	185 - 99
HDSP3736	♦HPA	184 - 74
HDSP3900	♦HPA	197 - 16
HDSP3901	♦HPA	197 - 17
HDSP3903	♦HPA	197 - 18
HDSP3905	♦HPA	197 - 19
HDSP3906	♦HPA	197 - 13
HDSP4030	♦HPA	179 - 99
HDSP4031	♦HPA	179 -100
HDSP4033	♦HPA	178 - 15
HDSP4036	♦HPA	177 - 42
HDSP4130	♦HPA	185 -100
HDSP4131	♦HPA	185 -101
HDSP4133	♦HPA	185 -102
HDSP4136	♦HPA	184 - 75
HDSP4200	♦HPA	197 - 20
HDSP4201	♦HPA	197 - 21
HDSP4203	♦HPA	197 - 22
HDSP4205	♦HPA	197 - 23
HDSP4206	♦HPA	197 - 14
HDSP4501	♦HPA	200 - 74
HDSP4503	♦HPA	200 - 75
HDSP4600	♦HPA	185 - 93
HDSP4601	♦HPA	185 - 94
HDSP4603	♦HPA	185 - 95
HDSP4606	♦HPA	185 - 96
HDSP4830	♦HPA	93 - 52
HDSP4832	♦HPA	93 - 49
HDSP4836	♦HPA	93 - 50
HDSP4840	♦HPA	93 - 51
HDSP4890	♦HPA	93 - 53
HDSP5301	♦HPA	192 - 29
HDSP5303	♦HPA	192 - 30
HDSP5307	♦HPA	191 - 73
HDSP5308	♦HPA	191 - 74
HDSP5321	♦HPA	193 - 3
HDSP5323	♦HPA	193 - 4
HDSP5501	♦HPA	192 - 53
HDSP5503	♦HPA	192 - 54
HDSP5507	♦HPA	191 - 83
HDSP5508	♦HPA	191 - 84
HDSP5521	♦HPA	193 - 12
HDSP5523	♦HPA	193 - 13
HDSP5531	♦HPA	192 - 55
HDSP5533	♦HPA	192 - 56
HDSP5537	♦HPA	191 - 86
HDSP5538	♦HPA	192 - 57
HDSP5551	♦HPA	191 - 17
HDSP5553	♦HPA	191 - 18
HDSP5557	♦HPA	191 - 19
HDSP5558	♦HPA	191 - 20
HDSP5601	♦HPA	192 - 49
HDSP5603	♦HPA	192 - 50
HDSP5607	♦HPA	177 - 37
HDSP5608	♦HPA	177 - 43
HDSP5621	♦HPA	193 - 7
HDSP5623	♦HPA	193 - 8
HDSP5701	♦HPA	192 - 51
HDSP5703	♦HPA	192 - 52
HDSP5707	♦HPA	191 - 81
HDSP5708	♦HPA	191 - 82
HDSP5721	♦HPA	193 - 9
HDSP5723	♦HPA	193 - 10
HDSP5731	♦HPA	192 - 58
HDSP5733	♦HPA	192 - 59
HDSP5737	♦HPA	191 - 87
HDSP5738	♦HPA	191 - 88
HDSP5901	♦HPA	191 - 21
HDSP5903	♦HPA	191 - 22
HDSP5907	♦HPA	191 - 23
HDSP5908	♦HPA	191 - 24
HDSP6300	♦HPA	199 - 20
HDSP6504	♦HPA	199 - 21
HDSP6508	♦HPA	199 - 22
HDSP7301	♦HPA	178 -102
HDSP7302	♦HPA	178 -103
HDSP7303	♦HPA	177 - 96
HDSP7304	♦HPA	178 -104
HDSP7307	♦HPA	178 -105
HDSP7308	♦HPA	178 -106
HDSP7311	♦HPA	178 -107
HDSP7313	♦HPA	177 - 97
HDSP7317	♦HPA	178 -108
HDSP7318	♦HPA	178 -109
HDSP7401	♦HPA	180 - 6
HDSP7402	♦HPA	180 - 7
HDSP7403	♦HPA	178 - 17
HDSP7404	♦HPA	180 - 8
HDSP7407	♦HPA	180 - 9
HDSP7408	♦HPA	180 - 10
HDSP7501	♦HPA	180 - 48
HDSP7502	♦HPA	180 - 49
HDSP7503	♦HPA	178 - 21
HDSP7504	♦HPA	180 - 50
HDSP7507	♦HPA	180 - 51
HDSP7508	♦HPA	180 - 52
HDSP7511	♦HPA	178 - 41
HDSP7513	♦HPA	178 - 42
HDSP7517	♦HPA	178 - 43
HDSP7518	♦HPA	178 - 44
HDSP7801	♦HPA	179 - 92
HDSP7802	♦HPA	179 - 93
HDSP7803	♦HPA	178 - 13
HDSP7804	♦HPA	179 - 94
HDSP7807	♦HPA	179 - 95

TYPE No.	MFRS	Pg&Line
HDSP7808	♦HPA	179 - 96
HDSP7901	♦HPA	178 - 52
HDSP7903	♦HPA	178 - 53
HDSP7907	♦HPA	178 - 54
HDSP7908	♦HPA	178 - 55
HDSP8600	♦HPA	197 - 15
HDSP8601	♦HPA	197 - 64
HDSP8603	♦HPA	197 - 94
HDSP8605	♦HPA	197 - 95
HDSP8606	♦HPA	197 - 38
HDSP8716	♦HPA	199 - 23
HDSP8724	♦HPA	199 - 24
HDSP8732	♦HPA	199 - 25
HDSP8740	♦HPA	199 - 26
HDSP8820	♦HPA	95 - 22
HDSP8825	♦HPA	95 - 24
HDSP8835	♦HPA	95 - 26
HEDS5000	♦HPA	233 - 61
HEDS5010	♦HPA	233 - 62
HEDS6000	♦HPA	233 - 63
HEDS6010	♦HPA	233 - 64
HEMT3300	♦HPA	52 - 30
HEMT6000	♦HPA	44 - 79
HFBR0010	♦HPA	231 - 82
HFBR1001	♦HPA	231 - 49
HFBR1002	♦HPA	231 - 50
HFBR1201	♦HPA	231 - 12
HFBR2001	♦HPA	231 - 13
HFBR2201	♦HPA	231 - 14
HFBR3099	♦HPA	231 - 83
HFD1060	♦EGG	124 - 49
HFD1100	♦EGG	124 - 50
HFD3000-002(A)		231 - 15
	♦HON	
HFD3000-102(A)		231 - 16
	♦HON	
HFD3002-002	♦HON	104 - 49
HFD3002-102	♦HON	104 - 50
HFD3022	♦HON	105 - 86
HFE4000X12	♦HON	81 - 63
HFE4000X13	♦HON	81 - 69
HFE4000X14	♦HON	81 - 79
HFE4000X22	♦HON	88 - 81
HFE4000X23	♦HON	88 - 82
HFE4003X22	♦HON	81 - 64
HFE4003X23	♦HON	81 - 70
HFE4003X24	♦HON	81 - 80
HFE4010X12(A)		231 - 51
	♦HON	
HFE4010X13(A)		231 - 52
	♦HON	
HFE4010X14(A)		231 - 53
	♦HON	
HFE4020-012	♦HON	81 - 73
HFE4020-013	♦HON	81 - 81
HFE4023-022	♦HON	81 - 74
HFE4023-023	♦HON	81 - 82
HG1075G	SIEX	177 - 20
HG1077G	SIEX	177 - 21
HG1105G	SIEX	182 - 65
HG1107G	SIEX	182 - 66
HG1131G	♦SIEG	191 - 9
	SIEX	
HG1132G	♦SIEG	191 - 10
	SIEX	
HG1133G	♦SIEG	191 - 11
	SIEX	
HG1134G	SIEX	191 - 12
HGCDTE1-40A	SBR	102 - 23
HGCDTE1-40AS	SBR	102 - 24
HGCDTE1-60A	SBR	102 - 25
HGCDTE1-60AS	SBR	102 - 26
HGCDTE1-520A(1)		102 - 31
	SBR	
HGCDTE1-520A(2)		101 - 62
	SBR	
HGCDTE1-520A(3)		102 - 40
	SBR	
HGCDTE1-520A(4)		101 - 63
	SBR	
HGCDTE1-520AS(2)		102 - 20
	SBR	
HGCDTE1-520AS(3)		102 - 17
	SBR	
HGCDTE1-520AS(4)		102 - 32
	SBR	
HGCDTE1-40742(2)		102 - 21
	SBR	
HGCDTE1-40742(3)		102 - 33
	SBR	
HGCDTE1-40742(4)		102 - 18
	SBR	
HGCDTE1-40742(5)		102 - 41
	SBR	
HGCDTE1-44782(2)		102 - 22
	SBR	
HGCDTE1-44782(3)		102 - 19
	SBR	
HGCDTE1-44782(4)		102 - 42
	SBR	
HGCDTE1-44782(5)		102 - 34
	SBR	
HGCDTE2-520AS(1)		101 - 59
	SBR	
HGCDTE2-520AS(2)		102 - 14
	SBR	
HGCDTE2-520AS(3)		101 - 67
	SBR	
HGCDTE2-520AS(4)		101 - 64
	SBR	
HGCDTE2-40742(1)		101 - 68
	SBR	
HGCDTE2-40742(2)		102 - 15
	SBR	

1. TYPE No. CROSS INDEX

IN TYPE NUMBER SEQUENCE

TYPE No.	MFRS	Pg&Line
HGCDTE2-40742(3)	SBR	101 - 65
HGCDTE2-40742(4)	SBR	101 - 60
HGCDTE2-44782(1)	SBR	101 - 69
HGCDTE2-44782(2)	SBR	101 - 61
HGCDTE2-44782(3)	SBR	101 - 66
HGCDTE2-44782(4)	SBR	102 - 16
HGCDTE-.5-40A	SBR	102 - 27
HGCDTE-.5-40AS	SBR	102 - 28
HGCDTE-.5-40742(2)	SBR	102 - 43
HGCDTE-.5-40742(3)	SBR	102 - 51
HGCDTE-.5-40742(4)	SBR	102 - 55
HGCDTE-.5-40742(5)	SBR	102 - 47
HGCDTE-.5-44782(2)	SBR	102 - 48
HGCDTE-.5-44782(3)	SBR	102 - 44
HGCDTE-.5-44782(4)	SBR	102 - 56
HGCDTE-.5-44782(5)	SBR	102 - 52
HGCDTE-.5-520A(1)	SBR	102 - 57
HGCDTE-.5-520A(2)	SBR	102 - 53
HGCDTE-.5-520A(3)	SBR	102 - 49
HGCDTE-.5-520A(4)	SBR	102 - 45
HGCDTE-.5-520AS(2)	SBR	102 - 50
HGCDTE-.5-520AS(3)	SBR	102 - 58
HGCDTE-.5-520AS(4)	SBR	102 - 46
HGCDTE-.5-520AS(5)	SBR	102 - 54
HGCDTE-.5-60A	SBR	102 - 29
HGCDTE-.5-60AS	SBR	102 - 30
HL7801E	HITJ	96 - 53
HL7801G	HITJ	96 - 54
HLC1395-001	HON	160 - 9
HLC1395-002	HON	160 - 20
HLMP0300	♦FSC	46 -110
	TFS	
HLMP0301	♦HPA	50 - 95
HLMP0354	♦HPA	43 -108
HLMP0363	♦HPA	54 - 3
HLMP0364	♦HPA	54 - 18
HLMP0365	♦HPA	54 - 19
HLMP0366	♦HPA	54 - 20
HLMP0380	♦HPA	43 -109
HLMP0381	♦HPA	43 -110
HLMP0391	♦HPA	54 - 4
HLMP0392	♦FSC	54 - 5
♦HPA	TFS	
HLMP0400	♦HPA	64 - 72
HLMP0401	♦HPA	66 - 42
HLMP0454	♦HPA	61 -102
HLMP0463	♦HPA	68 - 23
HLMP0464	♦HPA	68 - 26
HLMP0465	♦HPA	68 - 27
HLMP0466	♦HPA	68 - 28
HLMP0480	♦HPA	61 -103
HLMP0481	♦HPA	61 -104
HLMP0491	♦HPA	68 - 24
HLMP0492	♦FSC	68 - 25
♦HPA	TFS	
HLMP0500	♦HPA	72 -109
HLMP0501	♦HPA	74 - 22
HLMP0503	♦HPA	69 - 41
HLMP0504	♦FSC	75 - 61
	TFS	
HLMP0554	♦HPA	70 - 43
HLMP0563	♦HPA	77 - 95
HLMP0564	♦HPA	77 - 98
HLMP0565	♦HPA	77 - 99
HLMP0566	♦HPA	77 -100
HLMP0580	♦HPA	70 - 44
HLMP0581	♦HPA	69 -106
HLMP0591	♦HPA	77 - 96
HLMP0592	♦HPA	77 - 97
HLMP0904	♦HPA	42 - 11
HLMP0930	♦HPA	42 - 12
HLMP0931	♦HPA	42 - 13
HLMP1000	♦HPA	44 - 12
HLMP1002	♦HPA	49 - 16
HLMP1071	♦HPA	47 - 33
HLMP1080	♦HPA	44 - 13
HLMP1100	♦HPA	45 - 44
HLMP1100-101	♦HPA	45 - 26
HLMP1120	♦HPA	45 - 40
HLMP1142	♦HPA	41 - 60
HLMP1200	♦HPA	43 - 54
HLMP1201	♦HPA	49 - 1
HLMP1300	♦FSC	43 - 28
HLMP1301	♦FSC	46 - 75
HLMP1301-010	♦HPA	46 - 35
HLMP1301-101	♦HPA	46 - 36
HLMP1301-104	♦HPA	91 - 56
HLMP1302	♦FSC	50 - 12
HLMP1320	♦HPA	52 - 63
HLMP1321	♦HPA	52 - 64

TYPE No.	MFRS	Pg&Line
HLMP1340	♦HPA	54 - 39
HLMP1350	♦HPA	46 - 76
HLMP1385	♦HPA	52 - 66
HLMP1400	♦FSC	61 - 71
HLMP1401	♦FSC	63 - 19
HLMP1401-010	♦HPA	65 - 23
HLMP1401-101	♦HPA	65 - 24
HLMP1401-104	♦FSC	91 - 83
	♦HPA	
HLMP1402	♦HPA	69 - 29
HLMP1420	♦HPA	66 -106
HLMP1421	♦HPA	66 -107
HLMP1440	♦HPA	68 - 38
HLMP1450	♦HPA	63 - 20
HLMP1485	♦HPA	66 -110
HLMP1500	♦FSC	71 - 10
HLMP1501	♦FSC	72 - 9
HLMP1502	♦FSC	74 -106
HLMP1503	♦HPA	74 -107
HLMP1503-010	♦HPA	72 - 39
HLMP1503-101	♦HPA	72 - 40
HLMP1503-104	♦HPA	91 - 99
HLMP1520	♦HPA	76 - 62
HLMP1521	♦HPA	76 - 63
HLMP1523	♦HPA	76 - 80
HLMP1540	♦HPA	77 -108
HLMP1550	♦HPA	72 -100
HLMP1585	♦HPA	75 -103
HLMP1600	♦HPA	48 - 80
HLMP1600-010	♦HPA	48 - 77
HLMP1600-101	♦HPA	48 - 78
HLMP1601	♦HPA	48 - 81
HLMP1620	♦HPA	64 - 43
HLMP1620-010	♦HPA	64 - 40
HLMP1620-101	♦HPA	64 - 41
HLMP1621	♦HPA	64 - 44
HLMP1640	♦HPA	73 - 76
HLMP1640-010	♦HPA	73 - 73
HLMP1640-101	♦HPA	73 - 74
HLMP1641	♦HPA	73 - 77
HLMP1660	♦HPA	43 - 1
HLMP1661	♦HPA	43 - 2
HLMP1674	♦HPA	61 - 51
HLMP1675	♦HPA	61 - 52
HLMP1687	♦HPA	70 - 53
HLMP1688	♦HPA	70 - 54
HLMP1700	♦HPA	46 - 21
HLMP1719	♦HPA	62 -105
HLMP1740	♦HPA	40 -106
HLMP1760	♦HPA	60 - 69
HLMP1790	♦HPA	72 - 33
HLMP1800	♦HPA	45 - 55
HLMP1801	♦HPA	50 - 77
HLMP1819	♦HPA	62 - 96
HLMP1820	♦HPA	64 - 38
HLMP1840	♦HPA	72 - 41
HLMP1841	♦HPA	72 - 42
HLMP2000	♦HPA	89 - 97
HLMP2050	♦HPA	90 - 78
HLMP2100	♦HPA	89 - 98
HLMP2120	♦HPA	90 - 72
HLMP2135	♦HPA	89 -102
HLMP2155	♦HPA	90 - 79
HLMP2170	♦HPA	89 -103
HLMP2185	♦HPA	90 - 85
HLMP2300	♦HPA	89 - 65
HLMP2350	♦HPA	90 - 39
HLMP2400	♦HPA	89 - 85
HLMP2450	♦HPA	90 - 62
HLMP2500	♦HPA	89 -100
HLMP2550	♦HPA	90 - 80
HLMP2600	♦HPA	90 - 38
HLMP2620	♦HPA	90 -101
HLMP2635	♦HPA	90 -102
HLMP2655	♦HPA	90 - 43
HLMP2670	♦HPA	90 -105
HLMP2685	♦HPA	90 -104
HLMP2700	♦HPA	90 - 58
HLMP2720	♦HPA	91 - 3
HLMP2735	♦HPA	91 - 5
HLMP2755	♦HPA	90 - 63
HLMP2770	♦HPA	91 - 6
HLMP2785	♦HPA	91 - 8
HLMP2800	♦HPA	90 - 73
HLMP2820	♦HPA	91 - 11
HLMP2835	♦HPA	91 - 13
HLMP2855	♦HPA	90 - 77
HLMP2870	♦HPA	91 - 14
HLMP2885	♦HPA	91 - 17
	TFS	
HLMP2950	♦HPA	90 - 44
HLMP2965	♦HPA	90 - 46
HLMP2980	♦HPA	90 - 45
HLMP3000	♦HPA	47 - 40
	♦TFS	
HLMP3001	♦HPA	50 - 55
	♦TFS	
HLMP3002	♦HPA	45 -102
	TFS	
HLMP3003	♦HPA	50 - 60
HLMP3050	♦HPA	47 - 41
	TFS	
HLMP3105	♦HPA	45 - 42
HLMP3112	♦HPA	45 - 43
HLMP3200	♦HPA	47 - 44
	♦TFS	
HLMP3201	♦HPA	50 - 62
	♦TFS	
HLMP3300	♦HPA	50 - 15
	♦TFS	
HLMP3301	♦HPA	52 - 11
	♦TFS	
HLMP3315	♦HPA	53 - 50
	♦TFS	

TYPE No.	MFRS	Pg&Line
HLMP3316	♦HPA	53 -102
	♦TFS	
HLMP3350	♦HPA	50 - 16
	♦TFS	
HLMP3351	♦HPA	52 - 40
	♦TFS	
HLMP3365	♦HPA	52 - 92
	♦TFS	
HLMP3366	♦HPA	53 - 51
HLMP3390	♦HPA	54 - 66
HLMP3400	♦HPA	65 - 29
	♦TFS	
HLMP3401	♦HPA	66 - 71
	♦TFS	
HLMP3415	♦HPA	67 - 67
	♦TFS	
HLMP3416	♦HPA	68 - 13
	♦TFS	
HLMP3450	♦HPA	65 - 87
	♦TFS	
HLMP3451	♦HPA	67 - 2
	♦TFS	
HLMP3465	♦HPA	67 - 3
	♦TFS	
HLMP3466	♦HPA	67 - 98
	♦TFS	
HLMP3490	♦HPA	68 - 61
HLMP3502	♦HPA	75 - 92
	♦TFS	
HLMP3507	♦HPA	76 - 93
	♦TFS	
HLMP3517	♦HPA	76 - 90
HLMP3519	♦HPA	77 - 38
HLMP3553	♦HPA	75 - 93
	♦TFS	
HLMP3554	♦HPA	77 - 52
	♦TFS	
HLMP3567	♦HPA	77 - 23
	♦TFS	
HLMP3568	♦HPA	78 - 64
	♦TFS	
HLMP3590	♦HPA	78 - 26
HLMP3600	♦HPA	48 - 82
HLMP3601	♦HPA	48 - 83
HLMP3650	♦HPA	64 - 45
HLMP3651	♦HPA	64 - 46
HLMP3680	♦HPA	73 - 78
HLMP3681	♦HPA	73 - 79
HLMP3750	♦HPA	55 - 3
HLMP3762	♦HPA	52 - 98
HLMP3850	♦HPA	69 - 14
HLMP3950	♦HPA	78 - 57
HLMP3962	♦HPA	76 - 97
HLMP4600	♦HPA	50 - 17
HLMP4601	♦HPA	52 - 2
	TFS	
HLMP4610	♦HPA	50 - 14
HLMP4700	♦HPA	47 - 63
	TFS	
HLMP4719	♦HPA	63 - 83
	TFS	
HLMP4740	♦HPA	72 -110
HLMP5000	♦HPA	50 - 44
HLMP5005	♦HPA	46 - 16
HLMP5012	♦HPA	46 - 13
HLMP5030	♦HPA	51 - 4
HLMP5040	♦HPA	66 - 18
HLMP5050	♦HPA	75 - 39
HLMP5060	♦HPA	48 - 79
HLMP5070	♦HPA	64 - 42
HLMP5080	♦HPA	73 - 75
HLMP6000	♦HPA	46 - 7
HLMP6000-010	♦HPA	43 - 26
HLMP6000-011	♦HPA	43 - 16
HLMP6000-021	♦HPA	43 - 17
HLMP6001	♦HPA	46 - 8
HLMP6020	♦HPA	46 - 9
HLMP6021	♦HPA	46 - 10
HLMP6203	♦HPA	89 -105
HLMP6204	♦HPA	90 - 32
HLMP6205	♦HPA	92 - 23
HLMP6206	♦HPA	92 - 82
HLMP6208	♦HPA	93 - 15
HLMP6300	♦HPA	46 -101
HLMP6300-010	♦HPA	40 - 47
HLMP6300-011	♦HPA	46 - 37
HLMP6300-021	♦HPA	46 - 38
HLMP6320	♦HPA	46 -102
HLMP6400	♦HPA	63 - 37
HLMP6400-010	♦HPA	60 - 62
HLMP6400-011	♦HPA	62 -110
HLMP6400-021	♦HPA	63 - 1
HLMP6420	♦HPA	63 - 38
HLMP6500	♦HPA	72 - 70
HLMP6500-010	♦HPA	69 - 43
HLMP6500-011	♦HPA	72 - 43
HLMP6500-021	♦HPA	72 - 44
HLMP6520	♦HPA	72 - 71
HLMP6600	♦HPA	46 -103
HLMP6600-011	♦HPA	47 - 83
HLMP6600-021	♦HPA	47 - 84
HLMP6620	♦HPA	40 -108
HLMP6620-011	♦HPA	45 - 45
HLMP6620-021	♦HPA	45 - 46
HLMP6653	♦HPA	89 -107
HLMP6654	♦HPA	46 - 87
HLMP6655	♦HPA	92 - 32
HLMP6656	♦HPA	92 - 84
HLMP6658	♦HPA	93 - 16
HLMP6753	♦HPA	90 - 12
HLMP6754	♦HPA	90 - 55
HLMP6755	♦HPA	92 - 33
HLMP6756	♦HPA	92 - 92
HLMP6758	♦HPA	93 - 21

TYPE No.	MFRS	Pg&Line
HLMP6853	♦HPA	90 - 18
HLMP6854	♦HPA	90 - 69
HLMP6855	♦HPA	92 - 73
HLMP6856	♦HPA	92 - 98
HLMP6858	♦HPA	93 - 25
HLMP7000	♦HPA	42 - 27
HLMP7000-011	♦HPA	42 - 25
HLMP7000-021	♦HPA	42 - 26
HLMP7019	♦HPA	60 -108
HLMP7019-011	♦HPA	60 -106
HLMP7019-021	♦HPA	60 -107
HLMP7040	♦HPA	70 - 4
HLMP7040-011	♦HPA	70 - 2
HLMP7040-021	♦HPA	70 - 3
HLMP-D100	♦HPA	54 - 24
HLMP-D400	♦HPA	58 - 55
HLMP-D401	♦HPA	59 - 5
HLMP-D600	♦HPA	74 - 42
HLMP-D601	♦HPA	76 - 4
HLMP-K100	♦HPA	53 - 62
HLMP-K400	♦HPA	57 - 2
HLMP-K401	♦HPA	58 - 32
HLMP-K402	♦HPA	58 - 75
HLMP-K600	♦HPA	72 - 63
HLMP-K601	♦HPA	74 - 72
HLMP-L250	♦HPA	45 - 56
HLMP-L251	♦HPA	50 - 78
HLMP-L350	♦HPA	62 - 97
HLMP-L351	♦HPA	64 - 39
HLMP-L550	♦HPA	72 - 45
HLMP-L551	♦HPA	74 - 25
HLMP-M200	♦HPA	51 -101
HLMP-M201	♦HPA	52 - 58
HLMP-M250	♦HPA	51 - 99
HLMP-M251	♦HPA	52 - 57
HLMP-M300	♦HPA	66 - 61
HLMP-M301	♦HPA	66 -103
HLMP-M350	♦HPA	66 - 59
HLMP-M351	♦HPA	66 -102
HLMP-M500	♦HPA	76 - 5
HLMP-M501	♦HPA	76 - 91
HLMP-M550	♦HPA	76 - 3
HLMP-M551	♦HPA	76 - 89
HLMP-Q100	♦HPA	51 - 97
HLMP-Q400	♦HPA	57 - 9
HLMP-Q600	♦HPA	72 - 72
HLP20RA	HITJ	87 - 61
HLP20RGA	HITJ	86 -100
HLP20RLA	HITJ	86 -101
HLP20TA	HITJ	87 - 62
HLP20WRA	HITJ	87 - 63
HLP20WTA	HITJ	87 - 64
HLP30RA	HITJ	87 -101
HLP30RB	HITJ	87 -105
HLP30RC	HITJ	88 - 1
HLP30RD	HITJ	88 - 7
HLP30RGA	HITJ	87 - 30
HLP30RGB	HITJ	87 - 32
HLP30RGC	HITJ	87 - 34
HLP30RGD	HITJ	87 - 36
HLP30RLA	HITJ	87 - 31
HLP30RLB	HITJ	87 - 33
HLP30RLC	HITJ	87 - 35
HLP30RLD	HITJ	87 - 37
HLP30TA	HITJ	87 -102
HLP30TB	HITJ	87 -106
HLP30TC	HITJ	88 - 2
HLP30TD	HITJ	88 - 8
HLP30WRA	HITJ	87 -103
HLP30WRB	HITJ	87 -107
HLP30WRC	HITJ	88 - 3
HLP30WRD	HITJ	88 - 9
HLP30WTA	HITJ	87 -104
HLP30WTB	HITJ	87 -108
HLP30WTC	HITJ	88 - 4
HLP30WTD	HITJ	88 - 10
HLP40RA	HITJ	88 - 17
HLP40RB	HITJ	88 - 21
HLP40RC	HITJ	88 - 25
HLP40RD	HITJ	88 - 29
HLP40RGA	HITJ	87 - 65
HLP40RGB	HITJ	87 - 67
HLP40RGC	HITJ	87 - 69
HLP40RGD	HITJ	87 - 71
HLP40RLA	HITJ	87 - 66
HLP40RLB	HITJ	87 - 68
HLP40RLC	HITJ	87 - 70
HLP40RLD	HITJ	87 - 72
HLP40TA	HITJ	88 - 18
HLP40TB	HITJ	88 - 22
HLP40TC	HITJ	88 - 26
HLP40TD	HITJ	88 - 30
HLP40WRA	HITJ	88 - 19
HLP40WRB	HITJ	88 - 23
HLP40WRC	HITJ	88 - 27
HLP40WRD	HITJ	88 - 31
HLP40WTA	HITJ	88 - 20
HLP40WTB	HITJ	88 - 24
HLP40WTC	HITJ	88 - 28
HLP40WTD	HITJ	88 - 32
HLP50RB	HITJ	88 - 37
HLP50RC	HITJ	88 - 41
HLP50RD	HITJ	88 - 45
HLP50RGB	HITJ	87 - 89
HLP50RGC	HITJ	87 - 91
HLP50RGD	HITJ	87 - 93
HLP50RLB	HITJ	87 - 90
HLP50RLC	HITJ	87 - 92
HLP50RLD	HITJ	87 - 94
HLP50TB	HITJ	88 - 38
HLP50TC	HITJ	88 - 42
HLP50TD	HITJ	88 - 46
HLP50WRB	HITJ	88 - 39
HLP50WRC	HITJ	88 - 43

TYPE No.	MFRS	Pg&Line
HLP50WRD	HITJ	88 - 47
HLP50WTB	HITJ	88 - 40
HLP50WTC	HITJ	88 - 44
HLP50WTD	HITJ	88 - 48
HLP60RB	HITJ	88 - 51
HLP60RC	HITJ	88 - 55
HLP60RD	HITJ	88 - 59
HLP60RGB	HITJ	87 -109
HLP60RGC	HITJ	88 - 5
HLP60RGD	HITJ	88 - 11
HLP60RLB	HITJ	87 -110
HLP60RLC	HITJ	88 - 6
HLP60RLD	HITJ	88 - 12
HLP60TB	HITJ	88 - 52
HLP60TC	HITJ	88 - 56
HLP60TD	HITJ	88 - 60
HLP60WRB	HITJ	88 - 53
HLP60WRC	HITJ	88 - 57
HLP60WRD	HITJ	88 - 61
HLP60WTB	HITJ	88 - 54
HLP60WTC	HITJ	88 - 58
HLP60WTD	HITJ	88 - 62
HLP1400	HITJ	96 - 81
HLP1500	HITJ	96 - 55
HLP1600	HITJ	96 - 82
HLP2400	HITJ	96 - 24
HLP2500	HITJ	96 - 17
HLP2600	HITJ	96 - 25
HLP3400	HITJ	96 - 74
HLP3500	HITJ	96 - 39
HLP3600	HITJ	96 - 75
HLP5400	HITJ	96 - 41
HLP5420	HITJ	96 - 40
HLP5500	HITJ	96 - 16
HLP5600	HITJ	96 - 42
HLP5700	HITJ	96 - 43
HMP2038	HON	160 - 45
HOA149-001	HON	159 - 65
HOA708-001	HON	159 - 60
HOA708-011	HON	159 - 61
HOA709-001	HON	160 - 27
HOA709-011	HON	160 - 28
HOA0825-001	♦HON	152 - 91
HOA0825-002	♦HON	152 - 92
HOA0825-003	♦HON	152 - 93
HOA0825-004	♦HON	152 - 94
HOA0860L51	♦HON	152 - 95
HOA0860L55	♦HON	152 - 96
HOA0860N51	♦HON	152 - 97
HOA0860N55	♦HON	152 - 98
HOA0860P51	♦HON	152 - 99
HOA0860P55	♦HON	152 -100
HOA0860T51	♦HON	152 -101
HOA0860T55	♦HON	152 -102
HOA0861L55	♦HON	154 - 62
HOA0861N55	♦HON	154 - 63
HOA0861P55	♦HON	154 - 64
HOA0861T55	♦HON	154 - 65
HOA0862L55	♦HON	155 - 71
HOA0862N55	♦HON	155 - 72
HOA0862P55	♦HON	155 - 73
HOA0862T55	♦HON	155 - 74
HOA0865L51	HON	152 -103
HOA0865L55	♦HON	152 -104
HOA0865N51	♦HON	152 -105
HOA0865N55	♦HON	152 -106
HOA0865P51	♦HON	152 -107
HOA0865P55	♦HON	152 -108
HOA0865T51	♦HON	152 -109
HOA0865T55	♦HON	152 -110
HOA0866L55	♦HON	154 - 66
HOA0866N55	♦HON	154 - 67
HOA0866P55	♦HON	154 - 68
HOA0866T55	♦HON	154 - 69
HOA0867L55	♦HON	155 - 75
HOA0867N55	♦HON	155 - 76
HOA0867P55	♦HON	155 - 77
HOA0867T55	♦HON	155 - 78
HOA0870L51	♦HON	153 - 1
HOA0870L55	♦HON	153 - 2
HOA0870N51	♦HON	153 - 3
HOA0870N55	♦HON	153 - 4
HOA0870P51	♦HON	153 - 5
HOA0870P55	♦HON	153 - 6
HOA0870T51	♦HON	153 - 7
HOA0870T55	HON	153 - 8
HOA0871L55	♦HON	154 - 70
HOA0871N55	♦HON	154 - 71
HOA0871P55	♦HON	154 - 72
HOA0871T55	♦HON	155 - 16
HOA0872L55	♦HON	155 - 79
HOA0872N55	♦HON	155 - 80
HOA0872P55	♦HON	155 - 81
HOA0872T55	♦HON	155 - 82
HOA0875L51	♦HON	153 - 9
HOA0875L55	♦HON	153 - 10
HOA0875N51	♦HON	153 - 11
HOA0875N55	♦HON	153 - 12
HOA0875P51	♦HON	153 - 13
HOA0875P55	♦HON	153 - 14
HOA0875T51	♦HON	153 - 15
HOA0875T55	♦HON	153 - 16
HOA0876L55	♦HON	154 - 73
HOA0876N55	♦HON	154 - 74
HOA0876P55	♦HON	154 - 75
HOA0876T55	♦HON	154 - 76
HOA0877L55	♦HON	155 - 83
HOA0877N55	♦HON	155 - 84
HOA0877P55	♦HON	155 - 85
HOA0877T55	♦HON	155 - 86
HOA0880L51	HON	153 - 17
HOA0880L55	HON	153 - 18
HOA0880N51	♦HON	153 - 19
HOA0880N55	♦HON	153 - 20

Δ-Registered with JEDEC by this manufacturer

♦-Mfr's data sheet available in microfilm service

1. TYPE No. CROSS INDEX

IN TYPE NUMBER SEQUENCE

TYPE No.	MFRS	Pg&Line
HOA0880P51	HON	153 - 21
HOA0880P55	HON	153 - 22
HOA0880T51	♦HON	153 - 23
HOA0880T55	♦HON	153 - 24
HOA0881L55	HON	154 - 77
HOA0881N55	♦HON	154 - 78
HOA0881P55	HON	154 - 79
HOA0881T55	♦HON	154 - 80
HOA0882L55	HON	155 - 87
HOA0882N55	♦HON	155 - 88
HOA0882P55	HON	155 - 89
HOA0882T55	♦HON	155 - 90
HOA0890L51	HON	153 - 25
HOA0890L55	HON	153 - 26
HOA0890N51	♦HON	153 - 27
HOA0890N55	♦HON	153 - 28
HOA0890P51	HON	153 - 29
HOA0890P55	HON	153 - 30
HOA0890T51	♦HON	153 - 31
HOA0890T55	♦HON	153 - 32
HOA0891L55	HON	154 - 81
HOA0891N55	♦HON	154 - 82
HOA0891P55	HON	154 - 83
HOA0891T55	♦HON	154 - 84
HOA0892L55	HON	155 - 91
HOA0892N55	HON	155 - 92
HOA0892P55	HON	155 - 93
HOA0892T55	♦HON	155 - 94
HOA0961L51	HON	149 - 23
HOA0961N51	HON	149 - 24
HOA0961P51	HON	149 - 25
HOA0961T51	HON	149 - 26
HOA0963L55	HON	149 - 27
HOA0963N55	HON	149 - 28
HOA0963P55	HON	149 - 29
HOA0963T55	HON	149 - 30
HOA0971L51	HON	149 - 31
HOA0971N51	HON	149 - 32
HOA0971P51	HON	149 - 33
HOA0971T51	HON	149 - 34
HOA0973L55	HON	149 - 35
HOA0973N55	HON	149 - 36
HOA0973P55	HON	149 - 37
HOA0973T55	HON	149 - 38
HOA1160-001	♦HON	160 - 19
HOA1160-002	♦HON	160 - 31
HOA1160-003	♦HON	160 - 39
HOA1180-001	♦HON	159 - 68
HOA1180-002	♦HON	159 -107
HOA1180-003	♦HON	160 - 32
HOA1397-001	♦HON	159 -109
HOA1397-002	♦HON	160 - 21
HOA1397-031	♦HON	160 - 30
HOA1397-032	♦HON	160 - 40
HOA1404-001	♦HON	160 - 1
HOA1404-002	♦HON	160 - 22
HOA1404-003	♦HON	160 - 33
HOA1405-001	♦HON	160 - 2
HOA1405-002	♦HON	160 - 23
HOA1870-031	♦HON	151 -110
HOA1870-033	♦HON	156 - 71
HOA1872-001	♦HON	152 - 1
HOA1872-002	♦HON	155 - 95
HOA1872-003	♦HON	157 - 15
HOA1872-011	♦HON	152 - 2
HOA1872-012	♦HON	155 - 96
HOA1872-13	♦HON	157 - 16
HOA1873-001	♦HON	152 - 3
HOA1873-002	♦HON	155 - 97
HOA1873-003	♦HON	157 - 17
HOA1873-011	♦HON	152 - 4
HOA1873-012	♦HON	155 - 98
HOA1873-013	♦HON	157 - 18
HOA1874-001	♦HON	152 - 5
HOA1874-002	♦HON	155 - 99
HOA1874-003	♦HON	157 - 19
HOA1874-011	♦HON	152 - 6
HOA1874-012	♦HON	155 -100
HOA1874-013	♦HON	157 - 20
HOA1875-001	♦HON	151 - 52
HOA1875-002	♦HON	154 - 3
HOA1875-003	♦HON	156 - 39
HOA1876-001	♦HON	151 - 53
HOA1876-002	♦HON	154 - 4
HOA1876-003	♦HON	156 - 40
HOA1877-001	♦HON	151 - 45
HOA1877-002	♦HON	153 -108
HOA1877-003	♦HON	155 - 65
HOA1878-011	♦HON	151 - 68
HOA1878-012	♦HON	155 -101
HOA1878-013	♦HON	157 - 21
HOA1879-011	♦HON	152 - 41
HOA1879-012	♦HON	155 -102
HOA1879-015	♦HON	153 - 33
HOA1881-011	♦HON	152 - 7
HOA1881-012	♦HON	155 -103
HOA1881-013	♦HON	157 - 22
HOA1882-1	♦HON	152 - 8
HOA1882-2	♦HON	155 -104
HOA1882-003	♦HON	157 - 23
HOA1882-011	♦HON	152 - 9
HOA1882-012	♦HON	155 -105
HOA1883-003	♦HON	157 - 24
HOA1883-011	♦HON	152 - 10
HOA1883-012	♦HON	155 -106
HOA2001-001	♦HON	157 -108
HOA2003-001	♦HON	157 -109
HOA2498-001	♦HON	159 - 69
HOA2498-002	♦HON	159 -108
HOA2498-003	♦HON	160 - 34
HOA2762-001	♦HON	151 - 36
HOA2762-002	♦HON	155 - 17
HOA2762-003	♦HON	156 - 72
HOA2862-001	♦HON	151 - 69

TYPE No.	MFRS	Pg&Line
HOA2862-002	♦HON	155 -107
HOA2862-003	♦HON	157 - 25
HOA6960L51	HON	149 - 39
HOA6960L55	HON	149 - 40
HOA6960N51	HON	149 - 41
HOA6960N55	HON	149 - 42
HOA6960P51	HON	149 - 43
HOA6960P55	HON	149 - 44
HOA6960T51	HON	149 - 45
HOA6960T55	HON	149 - 46
HOA6961L51	HON	149 - 47
HOA6961L55	HON	149 - 48
HOA6961N51	HON	149 - 49
HOA6961N55	HON	149 - 50
HOA6961P51	HON	149 - 51
HOA6961P55	HON	149 - 52
HOA6961T51	HON	149 - 53
HOA6961T55	HON	149 - 54
HOA6962L51	HON	149 - 55
HOA6962L55	HON	149 - 56
HOA6962N51	HON	149 - 57
HOA6962N55	HON	149 - 58
HOA6962P51	HON	149 - 59
HOA6962P55	HON	149 - 60
HOA6962T51	HON	149 - 61
HOA6962T55	HON	149 - 62
HOA6963L51	HON	149 - 63
HOA6963L55	HON	149 - 64
HOA6963N51	HON	149 - 65
HOA6963N55	HON	149 - 66
HOA6963P51	HON	149 - 67
HOA6963P55	HON	149 - 68
HOA6963T51	HON	149 - 69
HOA6963T55	HON	149 - 70
HOA6964L51	HON	149 - 71
HOA6964L55	HON	149 - 72
HOA6964N51	HON	149 - 73
HOA6964N55	HON	149 - 74
HOA6964P51	HON	149 - 75
HOA6964P55	HON	149 - 76
HOA6964T51	HON	149 - 77
HOA6964T55	HON	149 - 78
HOA6965L51	HON	149 - 79
HOA6965L55	HON	149 - 80
HOA6965N51	HON	149 - 81
HOA6965N55	HON	149 - 82
HOA6965P51	HON	149 - 83
HOA6965P55	HON	149 - 84
HOA6965T51	HON	149 - 85
HOA6965T55	HON	149 - 86
HOA6970L51	HON	149 - 87
HOA6970L55	HON	149 - 88
HOA6970N51	HON	149 - 89
HOA6970N55	HON	149 - 90
HOA6970P51	HON	149 - 91
HOA6970P55	HON	149 - 92
HOA6970T51	HON	149 - 93
HOA6970T55	HON	149 - 94
HOA6971L51	HON	149 - 95
HOA6971L55	HON	149 - 96
HOA6971N51	HON	149 - 97
HOA6971N55	HON	149 - 98
HOA6971P51	HON	149 - 99
HOA6971P55	HON	149 -100
HOA6971T51	HON	149 -101
HOA6971T55	HON	149 -102
HOA6972L51	HON	149 -103
HOA6972L55	HON	149 -104
HOA6972N51	HON	149 -105
HOA6972N55	HON	149 -106
HOA6972P51	HON	149 -107
HOA6972P55	HON	149 -108
HOA6972T51	HON	149 -109
HOA6972T55	HON	149 -110
HOA6973L51	HON	150 - 1
HOA6973L55	HON	150 - 2
HOA6973N51	HON	150 - 3
HOA6973N55	HON	150 - 4
HOA6973P51	HON	150 - 5
HOA6973P55	HON	150 - 6
HOA6973T51	HON	150 - 7
HOA6973T55	HON	150 - 8
HOA6974L51	HON	150 - 9
HOA6974L55	HON	150 - 10
HOA6974N51	HON	150 - 11
HOA6974N55	HON	150 - 12
HOA6974P51	HON	150 - 13
HOA6974P55	HON	150 - 14
HOA6974T51	HON	150 - 15
HOA6974T55	HON	150 - 16
HOA6975L51	HON	150 - 17
HOA6975L55	HON	150 - 18
HOA6975N51	HON	150 - 19
HOA6975N55	HON	150 - 20
HOA6975P51	HON	150 - 21
HOA6975P55	HON	150 - 22
HOA6975T51	HON	150 - 23
HOA6975T55	HON	150 - 24
HP2ML	♦KODC	107 - 34
HP3F	♦KODC	110 - 31
HP3FRII	♦KODC	111 - 32
HP3K	♦CENB	111 - 35
	♦KODC	
HP3KRII	♦KODC	111 - 36
HP3ML	♦KODC	111 - 37
HP3MLRII	♦KODC	111 - 34
HP5FRII	♦KODC	111 - 33
HP5FRIII	♦KODC	111 - 31
HP5082-4791	♦HPA	50 - 63
HP5082-4882	♦HPA	49 - 83
HP5082-4970	HPA	72 - 96
HP5082-4984	♦HPA	72 - 10
HP5082-4987	♦HPA	175 - 9
HP5082-7010	♦HPA	202 - 99

TYPE No.	MFRS	Pg&Line
HP5082-7011	♦HPA	200 - 2
HP5082-7100	♦HPA	202 -100
HP5082-7101	♦HPA	200 - 22
HP5082-7102	♦HPA	200 - 25
HP5082-7285	HPA	175 -108
HP5082-7295	HPA	175 -109
HP5082-7300	♦HPA	202 - 22
HP5082-7302	♦HPA	202 - 23
HP5082-7304	♦HPA	202 - 24
HP5082-7340	♦HPA	202 - 25
HP5082-7356	♦HPA	202 - 15
HP5082-7357	♦HPA	202 - 16
HP5082-7358	HPA	202 - 30
HP5082-7359	♦HPA	202 - 17
HP5082-7404	♦HPA	175 - 61
HP5082-7405	♦HPA	175 - 66
HP5082-7414	♦HPA	175 - 62
HP5082-7415	♦HPA	175 - 67
HP5082-7432	♦HPA	175 - 55
HP5082-7433	♦HPA	175 - 57
HP5082-7441	♦HPA	175 - 53
HP5082-7446	HPA	175 - 72
HP5082-7610	HPA	179 - 22
HP5082-7611	HPA	179 - 23
HP5082-7613	HPA	177 -103
HP5082-7616	HPA	177 - 35
HP5082-7620	HPA	178 - 99
HP5082-7621	HPA	178 -100
HP5082-7623	HPA	177 - 94
HP5082-7626	HPA	177 - 33
HP5082-7650	♦HPA	185 - 40
HP5082-7651	♦HPA	185 - 41
HP5082-7653	♦HPA	185 - 42
HP5082-7656	♦HPA	184 - 70
HP5082-7660	♦HPA	185 - 17
HP5082-7661	♦HPA	185 - 18
HP5082-7663	♦HPA	185 - 19
HP5082-7666	♦HPA	184 - 69
HP5082-7730	♦HPA	179 - 49
HP5082-7731	♦HPA	179 - 50
HP5082-7736	HPA	177 - 36
HP5082-7740	♦HPA	178 - 7
HP5082-7750	♦HPA	185 - 58
HP5082-7751	♦HPA	185 - 59
HP5082-7756	♦HPA	184 - 71
HP5082-7760	♦HPA	185 - 60
HPDL1414	♦HPA	202 - 6
HPDL2416	♦HPA	201 - 99
HPI1K1	♦KODC	103 - 80
HPI1K3	♦KODC	104 - 69
HPI2C	♦KODC	104 - 70
HPI2CRII	♦KODC	104 - 71
HPI0750	♦KODC	128 - 44
HPI0814	♦KODC	128 - 30
HPI1215	♦KODC	128 - 41
HPI1460	♦KODC	128 - 31
HSBG5501	♦STAJ	78 - 60
HTI20BG1	DPI	224 - 12
HUV1100BQ	♦EGG	124 - 75
HUV2000B	♦EGG	124 - 80
HUV4000B	♦EGG	124 - 81
HX106076(A)	♦PHIN	222 - 40
HX845800-380	♦MULB	221 - 73
♦PHIN	♦RTCF	
	♦VALG	
HX10607600-380		221 - 95
♦MULB	♦PHIN	
♦RTCF	♦VALG	
IBR3(A)	♦SIEG	95 - 18
IBR3-032	♦SIEG	95 - 19
	♦SIEX	
IC1000-1	♦MAI	231 - 84
IC1000-2	♦MAI	231 - 85
IC1000-3	♦MAI	231 - 86
IC1000-4	♦MAI	231 - 87
IC1000-5	♦MAI	231 - 88
IC2000	♦MAI	231 - 89
IDA1414-16(A)		201 - 85
♦SIEG	♦SIEX	
IDA1414-16-1	♦SIEG	201 - 87
	SIEX	
IDA1414-16-2	♦SIEG	201 - 88
	SIEX	
IDA1416-32	♦SIEG	201 -104
	♦SIEX	
IDA2416-16	♦SIEG	201 -103
	♦SIEX	
IDA2416-32	♦SIEG	201 -105
	♦SIEX	
IDA3416-16	♦SIEG	201 -109
	♦SIEX	
IDA3416-20	♦SIEG	201 -110
	♦SIEX	
IDA3416-32	♦SIEG	202 - 1
	♦SIEX	
IDA7135-16	♦SIEG	203 - 3
	♦SIEX	
IDA7135-20	♦SIEG	203 - 5
	♦SIEX	
IDA7137-16	♦SIEG	203 - 4
	♦SIEX	
IDA7137-20	♦SIEG	203 - 6
	♦SIEX	
IL1	♦MOTA	167 - 81
	♦SIEX	
IL1B	♦SIEG	167 - 60
IL2	♦SIEG	167 - 85
	♦SIEX	
IL5	♦SIEG	167 - 84
	♦SIEX	
IL8(A)	♦SIEG	167 -103
	♦SIEX	
IL9(A)	♦SIEG	167 -104
	♦SIEX	

TYPE No.	MFRS	Pg&Line
IL10	♦SIEG	167 -105
	♦SIEX	
IL11(2)	♦SIEG	167 -106
	♦SIEX	
IL12(2)	♦MOTA	164 - 66
IL30	♦SIEG	169 -100
	♦SIEX	
IL55	♦SIEG	169 - 99
	♦SIEX	
IL74	♦MOTA	167 - 82
♦SIEG	♦SIEX	
IL101	♦SIEG	173 - 41
	♦SIEX	
IL201	♦SIEG	167 - 86
	♦SIEX	
IL202	♦SIEG	167 - 90
	♦SIEX	
IL203	♦SIEG	167 - 93
	♦SIEX	
IL205	♦SIEG	164 - 14
	♦SIEX	
IL206	♦SIEX	164 - 25
IL207	♦SIEG	164 - 28
	♦SIEX	
IL211	♦SIEG	164 - 11
	♦SIEX	
IL212	♦SIEX	164 - 15
IL213	♦SIEG	164 - 29
	♦SIEX	
IL215	♦SIEG	164 - 12
	♦SIEX	
IL216	♦SIEX	164 - 16
IL217	♦SIEG	164 - 30
	♦SIEX	
IL221	♦SIEG	169 - 29
	♦SIEX	
IL222	♦SIEX	169 - 30
IL223	♦SIEG	169 - 31
	♦SIEX	
IL250	♦SIEG	166 -103
	♦SIEX	
IL251	♦SIEG	167 - 78
	♦SIEX	
IL252	♦SIEG	167 - 87
	♦SIEX	
IL256(A)	♦SIEG	165 - 17
	SIEX	
IL400(A)	♦SIEG	171 - 43
	♦SIEX	
IL410(A)	♦SIEX	172 - 9
IL416(A)	♦SIEX	171 - 83
IL420	♦SIEX	171 -100
ILCA2-30	♦SIEG	169 - 79
ILCA2-55	♦SIEG	169 - 80
ILCT6	♦SIEG	167 - 95
	♦SIEX	
ILD1	♦SIEG	167 - 62
	♦SIEX	
ILD2	♦SIEG	167 - 99
	♦SIEX	
ILD5	♦SIEX	167 - 96
ILD30(A)	♦SIEG	169 -102
	♦SIEX	
ILD32(A)	♦SIEX	169 -104
ILD55(A)	♦SIEG	169 -103
	♦SIEX	
ILD74	♦SIEG	167 - 61
	♦SIEX	
ILD610-1	♦SIEX	167 - 94
ILD610-2	♦SIEX	167 - 98
ILD610-3	♦SIEX	167 -100
ILD610-4	♦SIEX	167 -101
ILQ1	♦SIEG	167 - 64
	♦SIEX	
ILQ2	♦SIEG	167 -102
	♦SIEX	
ILQ5	♦SIEX	167 - 97
ILQ30(A)	♦SIEG	169 -105
	♦SIEX	
ILQ32(A)	♦SIEX	169 -107
ILQ55(A)	♦SIEG	169 -106
	♦SIEX	
ILQ74	♦SIEG	167 - 63
	♦SIEX	
INAS1-40742	SBR	111 - 81
INAS1-44782	SBR	111 - 82
INSB1-40A	SBR	102 - 4
INSB1-40AS	SBR	102 - 5
INSB1-60A	SBR	102 - 6
INSB1-60AS	SBR	102 - 7
INSB1-520A	SBR	102 - 3
INSB1-520AS	SBR	101 - 70
INSB1-40742	SBR	102 - 1
INSB1-44782	SBR	102 - 2
INSB2-40A	SBR	102 - 8
INSB2-40AS	SBR	102 - 9
INSB2-60A	SBR	102 - 10
INSB2-60AS	SBR	102 - 11
INSB2-520A	SBR	101 - 47
INSB2-520AS	SBR	101 - 48
INSB2-40742	SBR	101 - 49
INSB2-44782	SBR	101 - 50
INSB-.5-520A	SBR	102 - 35
INSB-.5-520AS	SBR	102 - 36
INSB-.5-40742	SBR	102 - 37
INSB-.5-44782	SBR	102 - 38
IRE160	♦LAD	85 - 90
IRE160FA	♦LAD	82 - 37
IRE160FB	♦LAD	81 - 98
IRE161	♦LAD	81 - 22
IRE165	♦LAD	96 - 12
IRE387-002	♦LAD	81 - 61
IRE387-003	♦LAD	81 - 65
IRE491	♦LAD	81 - 72

TYPE No.	MFRS	Pg&Line
IRL60	♦SIEG	82 -103
	♦SIEX	
IRL80(A)	♦SIEG	83 - 15
IRL80A	♦SIEX	82 - 51
IRL81(A)	♦SIEG	84 - 10
IRL81A(A)	♦SIEX	82 - 71
IRL400-1	♦SIEX	87 - 15
IRL400-2	♦SIEX	87 - 60
IRL401-1	♦SIEX	86 - 22
IRL401-2	♦SIEX	86 - 98
IRL402-1	♦SIEX	84 - 38
IRL402-2	♦SIEX	85 - 74
IRL500(A)	♦SIEG	88 - 16
	♦SIEX	
ISC302A	♦FACC	111 - 83
ISC302B	♦FACC	111 - 85
ISC302C	♦FACC	111 - 87
ISC302D	♦FACC	111 - 89
ISC302E	♦FACC	111 - 92
ISC302F	♦FACC	111 - 95
ISC363	♦FACC	111 - 84
ISC363A	♦FACC	111 - 86
ISC363B	♦FACC	111 - 88
ISC363C	♦FACC	111 - 90
ISC363D	♦FACC	111 - 93
ISC363E	♦FACC	111 - 96
ISC386	♦FACC	111 - 91
ISC386A	♦FACC	111 - 94
J3511-11	♦REC	200 - 31
J3511-21	♦REC	200 - 32
J3521-11	♦REC	200 - 34
J3521-21	♦REC	200 - 35
J3531-11	♦REC	200 - 36
J3531-21	♦REC	200 - 37
J3541-11	♦REC	200 - 39
J3541-21	♦REC	200 - 40
J3541R11	♦REC	200 - 41
J3541R21	♦REC	200 - 42
J5711-11	♦REC	200 - 91
J5711-21	♦REC	200 - 92
J5721-11	♦REC	200 - 95
J5721-21	♦REC	200 - 96
J5731-11	♦REC	200 - 93
J5731-21	♦REC	200 - 94
J5741-11	♦REC	200 -103
J5741-21	♦REC	200 -104
J5741R11	♦REC	200 -105
J5741R21	♦REC	200 -106
K120P	♦ALGG	164 - 91
K3010P	♦ALGG	171 - 90
K3010PG	♦ALGG	171 - 91
K3020P	♦ALGG	171 - 96
K3020PG	♦ALGG	171 - 97
K3021P	♦ALGG	171 - 98
K3021PG	♦ALGG	171 - 99
K5100	♦OTK	117 - 99
K5150	♦OTK	118 -107
K5151	♦OTK	117 - 66
K5200	♦OTK	117 - 33
K5250	♦OTK	118 - 92
K5256	♦OTK	119 - 45
K5258	♦OTK	119 -107
K5500	♦OTK	116 - 61
K5502	♦OTK	120 - 16
K5504	♦OTK	119 - 87
K5550	♦OTK	117 - 61
K5552	♦OTK	120 - 3
K5554	♦OTK	119 - 22
K5560-5	♦CRS	213 - 52
K5560-6	♦CRS	213 - 53
K6100	♦OTK	82 - 48
K6150	♦OTK	82 - 56
K6200	♦OTK	85 - 17
K6202	♦OTK	85 - 54
K6203	♦OTK	85 - 87
K6250	♦OTK	85 - 18
K6251	♦OTK	83 - 92
K6252	♦OTK	85 - 55
K6253	♦OTK	85 - 88
K6500	♦OTK	82 - 74
K6502	♦OTK	85 - 46
K6550	♦OTK	82 - 87
K6552	♦OTK	84 -101
K7100	OTK	108 - 77
K7150	OTK	108 - 76
K7200	OTK	108 - 80
K7250	OTK	108 - 81
K8010	♦OTK	159 - 9
K8020	♦OTK	159 - 7
K8030	♦OTK	159 - 8
K8031P	♦ALGG	173 - 72
K8100	♦OTK	155 -108
K8101	♦OTK	155 -109
K8102	♦OTK	153 - 34
K8103	♦OTK	155 - 18
K8105	♦OTK	153 - 35
K8110	♦OTK	153 - 36
K8111	♦OTK	153 - 37
K8112	♦OTK	152 - 30
K8113	♦OTK	151 - 89
K8114	♦OTK	151 - 32
K8120	♦OTK	155 - 19
K8121	♦OTK	155 -110
K8130	♦OTK	153 - 38
K8140	♦OTK	153 - 39
K8141	♦OTK	156 - 1
K8150	♦OTK	153 - 40
K8151	♦OTK	152 - 42
K8152	♦OTK	152 - 11
K8153	♦OTK	151 - 57
K8154	♦OTK	151 - 30
K8155	♦OTK	156 - 2
K8160	♦OTK	153 - 41
K8161	♦OTK	152 - 43

Δ-Registered with JEDEC by this manufacturer

♦-Mfr's data sheet available in microfilm service

1. TYPE No. CROSS INDEX

IN TYPE NUMBER SEQUENCE

TYPE No.	MFRS	Pg&Line
K8162	♦OTK	152 - 12
K8163	♦OTK	151 - 58
K8164	♦OTK	151 - 31
K8165	♦OTK	156 - 3
K8170	♦OTK	151 - 70
K8171	♦OTK	156 - 4
K8180	♦OTK	153 - 42
K8181	♦OTK	156 - 5
K8190	♦OTK	153 - 43
K8191	♦OTK	156 - 6
K8700	OTK	159 - 76
K8701	OTK	159 - 77
K8702	OTK	159 - 78
K8703	OTK	159 - 79
K8710	OTK	160 - 3
K8711	OTK	160 - 4
K8712	OTK	160 - 5
K8713	OTK	160 - 6
K8713-16	OTK	160 - 7
K8720	OTK	159 - 96
K8730	OTK	159 - 97
K8740	OTK	159 - 80
K8900	OTK	168 - 7
K8920	OTK	168 - 20
K8940	OTK	164 - 88
K8941	OTK	164 - 94
K8950	OTK	164 - 87
K9000	OTK	121 - 29
K9001	OTK	121 - 80
K9002	OTK	121 -110
K9010	OTK	121 - 65
K9011	OTK	122 - 27
K9012	OTK	122 - 36
K9020	OTK	122 - 32
K9021	OTK	122 - 34
K9022	OTK	122 - 35
KL101A	USSR	69 - 30
KL101B	USSR	69 - 32
KL101V	USSR	69 - 31
KL105A	USSR	175 -110
KL105B	USSR	176 - 1
KL105V	USSR	176 - 2
KO20-01	♦OPE	113 -105
KO20-02	♦OPE	113 -106
KO20-03	♦OPE	113 -107
KO25-51	♦OPE	113 - 46
KO25-52	♦OPE	113 - 24
KO25-53	♦OPE	113 - 18
KO25-181	♦OPE	113 - 47
KP20-01	♦OPE	113 - 99
KP20-02	♦OPE	113 -100
KP20-03	♦OPE	113 -101
KQ20-01	♦OPE	113 -102
KQ20-02	♦OPE	113 -103
KQ20-03	♦OPE	113 -104
KRE02	♦KODC	233 - 65
KU107-01	♦STAJ	155 - 63
KU107-02	♦STAJ	157 - 95
KU109-22	♦STAJ	155 - 20
KU110-22	♦STAJ	155 - 21
L12-12	♦REC	225 - 1
L14C1	♦GESY	117 - 59
L14C2	♦GESY	116 - 57
L14F1	♦GESY	121 - 85
L14F2	♦GESY	121 - 51
L14G1	♦GESY	119 - 40
L14G2	♦GESY	118 - 77
L14G3	♦GESY	119 - 99
L14N1	♦GESY	118 - 67
L14N2	♦GESY	119 - 29
L14P1	♦GESY	119 - 72
L14P2	♦GESY	119 - 92
L14Q1	♦GESY	117 - 34
L14R1	♦GESY	122 - 6
L15-30	♦REC	225 - 2
L15-45	♦REC	225 - 3
L32R-G2-2112	♦LEE	76 - 26
L32R-G2-2112T	♦LEE	76 - 27
L32R-G2-2312	♦LEE	76 - 28
L32R-G2-2312T	♦LEE	76 - 29
L32R-G6-2112	♦LEE	76 - 30
L32R-G6-2112T	♦LEE	76 - 31
L32R-G6-2312	♦LEE	76 - 32
L32R-G6-2312T	♦LEE	76 - 33
L32R-G12-2112	♦LEE	78 - 52
L32R-G12-2112T	♦LEE	76 - 34
L32R-G12-2312	♦LEE	78 - 53
L32R-G12-2312T	♦LEE	76 - 35
L32R-G24-2112	♦LEE	78 - 54
L32R-G24-2112T	♦LEE	76 - 36
L32R-G24-2312	♦LEE	78 - 55
L32R-G24-2312T	♦LEE	76 - 37
L32R-R2-2111	♦LEE	54 - 75
L32R-R2-2111T	♦LEE	52 - 68
L32R-R2-2311	♦LEE	54 - 76
L32R-R2-2311T	♦LEE	52 - 69
L32R-R6-2111	♦LEE	54 - 77
L32R-R6-2111T	♦LEE	52 - 70
L32R-R6-2311	♦LEE	54 - 78
L32R-R6-2311T	♦LEE	52 - 71
L32R-R12-2111	♦LEE	54 - 79
L32R-R12-2111T	♦LEE	52 - 72
L32R-R12-2311	♦LEE	54 - 80
L32R-R12-2311T	♦LEE	52 - 73
L32R-R24-2111	♦LEE	52 - 74
L32R-R24-2111T	♦LEE	52 - 75
L32R-R24-2311	♦LEE	52 - 76
L32R-R24-2311T	♦LEE	52 - 77
L32R-Y2-2116	♦LEE	67 - 21
L32R-Y2-2116T	♦LEE	67 - 22
L32R-Y2-2316	♦LEE	67 - 23
L32R-Y2-2316T	♦LEE	67 - 24
L32R-Y6-2116	♦LEE	67 - 42
L32R-Y6-2116T	♦LEE	67 - 43
L32R-Y6-2316	♦LEE	67 - 25
L32R-Y6-2316T	♦LEE	67 - 44
L32R-Y12-2116	♦LEE	67 - 26
L32R-Y12-2116T	♦LEE	67 - 27
L32R-Y12-2316	♦LEE	67 - 45
L32R-Y12-2316T	♦LEE	67 - 46
L32R-Y24-2116	♦LEE	67 - 28
L32R-Y24-2116T	♦LEE	67 - 47
L32R-Y24-2316	♦LEE	67 - 48
L32R-Y24-2316T	♦LEE	67 - 49
L39UR-G2-2112	♦LEE	75 - 62
L39UR-G2-2312	♦LEE	75 - 63
L39UR-G6-2112	♦LEE	75 - 64
L39UR-G6-2312	♦LEE	75 - 65
L39UR-G12-2112	♦LEE	75 - 66
L39UR-G12-2312	♦LEE	75 - 67
L39UR-G24-2112	♦LEE	75 - 68
L39UR-G24-2312	♦LEE	75 - 69
L39UR-R2-2111	♦LEE	51 - 61
L39UR-R2-2311	♦LEE	51 - 62
L39UR-R6-2111	♦LEE	51 - 63
L39UR-R6-2311	♦LEE	51 - 64
L39UR-R12-2111	♦LEE	51 - 65
L39UR-R12-2311	♦LEE	51 - 66
L39UR-R24-2111	♦LEE	51 - 67
L39UR-R24-2311	♦LEE	51 - 68
L39UR-Y2-2116	♦LEE	65 - 93
L39UR-Y2-2316	♦LEE	65 - 94
L39UR-Y6-2116	♦LEE	65 - 95
L39UR-Y6-2316	♦LEE	65 - 96
L39UR-Y12-2116	♦LEE	65 - 97
L39UR-Y12-2316	♦LEE	65 - 98
L39UR-Y24-2116	♦LEE	65 - 99
L39UR-Y24-2316	♦LEE	65 -100
L41-1SERIES	♦LWE	59 - 41
L41-2SERIES	♦LWE	52 - 94
L41-4SERIES	♦LWE	50 - 89
L41EN-G2-2112	♦LEE	75 - 70
L41EN-G6-2112	♦LEE	75 - 71
L41EN-G12-2112	♦LEE	75 - 72
L41EN-G24-2112	♦LEE	75 - 73
L41EN-R2-2111	♦LEE	51 - 69
L41EN-R6-2111	♦LEE	51 - 70
L41EN-R12-2111	♦LEE	51 - 71
L41EN-R24-2111	♦LEE	51 - 72
L41EN-Y2-2116	♦LEE	65 -101
L41EN-Y6-2116	♦LEE	65 -102
L41EN-Y12-2116	♦LEE	65 -103
L41EN-Y24-2116	♦LEE	65 -104
L45RN-G2-2112	♦LEE	75 - 28
L45RN-G2-2312	♦LEE	75 - 29
L45RN-G6-2112	♦LEE	75 - 30
L45RN-G6-2312	♦LEE	75 - 31
L45RN-G12-2112	♦LEE	75 - 32
L45RN-G12-2312	♦LEE	75 - 33
L45RN-G24-2112	♦LEE	75 - 34
L45RN-G24-2312	♦LEE	75 - 35
L45RN-R2-2111	♦LEE	50 -101
L45RN-R2-2311	♦LEE	50 -102
L45RN-R6-2111	♦LEE	50 -103
L45RN-R6-2311	♦LEE	50 -104
L45RN-R12-2111	♦LEE	50 -105
L45RN-R12-2311	♦LEE	50 -106
L45RN-R24-2111	♦LEE	50 -107
L45RN-R24-2311	♦LEE	50 -108
L45RN-Y2-2116	♦LEE	66 - 10
L45RN-Y2-2316	♦LEE	66 - 11
L45RN-Y6-2116	♦LEE	66 - 12
L45RN-Y6-2316	♦LEE	66 - 13
L45RN-Y12-2116	♦LEE	66 - 14
L45RN-Y12-2316	♦LEE	66 - 15
L45RN-Y24-2116	♦LEE	66 - 16
L45RN-Y24-2316	♦LEE	66 - 17
L58C-G2T	♦LEE	77 - 85
L58C-G2W	♦LEE	77 - 81
L58C-G6W	♦LEE	77 - 82
L58C-G12W	♦LEE	77 - 83
L58C-G24W	♦LEE	77 - 84
L58C-R2T	♦LEE	53 - 90
L58C-R2W	♦LEE	53 - 86
L58C-R6W	♦LEE	53 - 87
L58C-R12W	♦LEE	53 - 88
L58C-R24W	♦LEE	53 - 89
L58C-Y2T	♦LEE	68 - 72
L58C-Y2W	♦LEE	68 - 50
L58C-Y6W	♦LEE	68 - 51
L58C-Y12W	♦LEE	68 - 52
L58C-Y24W	♦LEE	68 - 53
L58D-G2T	♦LEE	77 - 19
L58D-G2W	♦LEE	76 -101
L58D-G6W	♦LEE	76 -102
L58D-G12W	♦LEE	76 -103
L58D-G24W	♦LEE	76 -104
L58D-R2T	♦LEE	53 - 37
L58D-R2W	♦LEE	53 - 32
L58D-R6W	♦LEE	53 - 33
L58D-R12W	♦LEE	53 - 34
L58D-R24W	♦LEE	53 - 35
L58D-Y2T	♦LEE	68 - 29
L58D-Y2W	♦LEE	68 - 17
L58D-Y6W	♦LEE	68 - 18
L58D-Y12W	♦LEE	68 - 19
L58D-Y24W	♦LEE	68 - 20
L59CG2T	♦LEE	76 - 64
L59CG2W	♦LEE	76 - 65
L59CG6T	♦LEE	76 - 66
L59CG6W	♦LEE	76 - 67
L59CG12T	♦LEE	76 - 68
L59CG12W	♦LEE	76 - 69
L59CG24W	♦LEE	76 - 70
L59CR2T	♦LEE	52 -107
L59CR2W	♦LEE	52 -108
L59CR6W	♦LEE	52 -109
L59CR12W	♦LEE	52 -110
L59CR24W	♦LEE	53 - 1
L59DG2T	♦LEE	76 - 71
L59DG2W	♦LEE	76 - 72
L59DG6T	♦LEE	76 - 73
L59DG6W	♦LEE	76 - 74
L59DG12T	♦LEE	76 - 75
L59DG12W	♦LEE	76 - 76
L59DG24T	♦LEE	76 - 77
L59DG24W	♦LEE	76 - 78
L59DR2T	♦LEE	53 - 2
L59DR2W	♦LEE	53 - 3
L59DR6T	♦LEE	53 - 4
L59DR6W	♦LEE	53 - 5
L59DR12T	♦LEE	53 - 6
L59DR12W	♦LEE	53 - 7
L59DR24T	♦LEE	53 - 8
L59DR24W	♦LEE	53 - 9
L59DY2T	♦LEE	67 - 29
L59DY2W	♦LEE	67 - 30
L59DY6T	♦LEE	67 - 31
L59DY6W	♦LEE	67 - 32
L59DY12T	♦LEE	67 - 33
L59DY12W	♦LEE	67 - 34
L59DY24T	♦LEE	67 - 35
L59DY24W	♦LEE	67 - 36
L59UC-G2W	♦LEE	76 -105
L59UC-G6W	♦LEE	76 -106
L59UC-G12W	♦LEE	76 -107
L59UC-G24W	♦LEE	76 -108
L59UC-R6W	♦LEE	53 - 53
L59UC-R12W	♦LEE	53 - 54
L59UC-R24W	♦LEE	53 - 55
L59UC-Y2W	♦LEE	69 - 25
L59UC-Y6W	♦LEE	69 - 26
L59UC-Y12W	♦LEE	69 - 27
L59UC-Y24W	♦LEE	68 - 4
L59UD-G2W	♦LEE	76 -109
L59UD-G6W	♦LEE	76 -110
L59UD-G12W	♦LEE	77 - 1
L59UD-G24W	♦LEE	77 - 2
L59UD-R6W	♦LEE	53 - 56
L59UD-R12W	♦LEE	53 - 57
L59UD-R24W	♦LEE	53 - 58
L59UD-Y2W	♦LEE	68 - 8
L59UD-Y6W	♦LEE	68 - 9
L59UD-Y12W	♦LEE	68 - 10
L59UD-Y24W	♦LEE	68 - 11
L111CA	♦LEE	59 - 92
L111CG	♦LEE	78 - 17
L111CR	♦LEE	53 - 92
L111CY	♦LEE	67 - 79
L111DA	♦LEE	58 - 76
L111DG	♦LEE	75 - 74
L111DR	♦LEE	51 - 73
L111DRG	♦LEE	79 - 7
L111DY	♦LEE	65 -105
L121CA	♦LEE	60 - 35
L121CG	♦LEE	78 - 36
L121CR	♦LEE	54 - 72
L121CY	♦LEE	68 -101
L121DA	♦LEE	59 - 44
L121DG	♦LEE	76 - 38
L121DR	♦LEE	52 - 78
L121DY	♦LEE	67 - 37
L131CG	♦LEE	78 - 61
L131CR	♦LEE	54 -102
L131CY	♦LEE	68 -110
L131DG	♦LEE	77 - 3
L131DR	♦LEE	53 -107
L131DY	♦LEE	68 - 54
L191DR	♦LEE	47 - 1
L291CR	♦LEE	52 - 99
L291CY	♦LEE	67 -103
L291DG	♦LEE	75 -105
L291DR	♦LEE	52 - 46
L291DY	♦LEE	67 - 38
L311DA	♦LEE	58 - 37
L311DG	♦LEE	74 - 81
L311DR	♦LEE	50 - 45
L311DY	♦LEE	65 - 35
L381DR	♦LEE	47 - 2
L400-1	♦BAR	106 - 52
L400-2	♦BAR	106 - 53
L400-3	♦BAR	106 - 54
L400-4	♦BAR	106 - 55
L400-5	♦BAR	106 - 48
L400-6	♦BAR	106 - 49
L400-7	♦BAR	106 - 50
L400-8	♦BAR	106 - 51
L400-9	♦BAR	106 - 38
L400-10	♦BAR	106 - 39
L400-11	♦BAR	106 - 40
L400-12	♦BAR	106 - 41
L400-13	♦BAR	106 - 42
L400-14	♦BAR	106 - 43
L400-15	♦BAR	106 - 44
L400-16	♦BAR	106 - 45
L400-17	♦BAR	106 - 46
L400-18	♦BAR	106 - 47
L411DG	♦LEE	73 - 92
L411DR	♦LEE	47 - 3
L411DY	♦LEE	64 - 56
L511DG	♦LEE	73 - 93
L511DR	♦LEE	47 - 4
L511DY	♦LEE	64 - 57
L563A5	♦CRS	214 - 36
L563A6	♦CRS	214 - 37
L563A-G	♦CRS	206 - 82
L563A-M	CRS	206 - 83
L563A-X	CRS	206 - 84
L564C5	CRS	214 - 43
L564C6	CRS	214 - 44
L611DA	♦LEE	58 - 77
L611DG	♦LEE	75 - 75
L611DR	♦LEE	51 - 74
L611DRG	♦LEE	79 - 8
L611DY	♦LEE	65 -106
L612DA	♦LEE	58 - 78
L612DG	♦LEE	75 - 76
L612DR	♦LEE	51 - 75
L612DY	♦LEE	65 -107
L613DG	♦LEE	74 - 82
L613DR	♦LEE	50 - 46
L613DY	♦LEE	65 - 36
L615DA	♦LEE	58 - 79
L615DG	♦LEE	75 - 77
L615DR	♦LEE	51 - 76
L615DY	♦LEE	65 -108
L621DA	♦LEE	59 - 45
L621DG	♦LEE	76 - 39
L621DR	♦LEE	52 - 79
L621DY	♦LEE	67 - 39
L622DA	♦LEE	59 - 46
L622DG	♦LEE	76 - 40
L622DR	♦LEE	52 - 80
L622DY	♦LEE	67 - 40
L625DA	♦LEE	59 - 47
L625DG	♦LEE	76 - 41
L625DR	♦LEE	52 - 81
L625DY	♦LEE	67 - 41
L631DG	♦LEE	77 - 4
L631DR	♦LEE	53 -108
L631DY	♦LEE	68 - 55
L632DG	♦LEE	77 - 5
L632DR	♦LEE	53 -109
L632DY	♦LEE	68 - 56
L633DR	♦LEE	53 - 59
L633DY	♦LEE	68 - 21
L635DG	♦LEE	77 - 6
L635DR	♦LEE	53 -110
L635DY	♦LEE	68 - 57
L700	♦BAR	110 - 30
L1854	♦HPKJ	81 - 38
L1909	♦HPKJ	81 - 29
L1915	♦HPKJ	81 - 57
L1915-01	♦HPKJ	81 - 58
L1915-02	♦HPKJ	81 - 59
L2347(2)	♦HPKJ	85 - 77
L2347-01	♦HPKJ	84 - 57
L2347-02	♦HPKJ	84 - 73
L4412	♦FACC	107 - 61
L4501	♦FACC	104 -105
L4502(2)	♦FACC	104 -106
L4503	♦FACC	105 -107
L4504	♦FACC	105 -108
L4506	♦FACC	105 -109
L4509	♦FACC	105 -110
L4520	♦FACC	111 - 65
L4521	♦FACC	111 - 80
L5635-5	♦CRS	214 - 38
L5635-6	♦CRS	214 - 39
L5635G	♦CRS	214 - 40
L5635M	CRS	214 - 41
L5635X	CRS	214 - 42
L5640-5	♦CRS	214 - 51
L5640-6	♦CRS	214 - 52
L5640G	♦CRS	214 - 53
L5640M	CRS	214 - 54
L5640X	CRS	214 - 55
L11201/P11201	SAM	158 - 76
L30011	♦SAM	225 - 4
L30041	♦SAM	225 - 5
L31011	♦SAM	236 - 5
L31014	♦SAM	236 - 6
L32001	♦SAM	236 - 7
L32004	♦SAM	236 - 8
L33014	♦SAM	158 - 77
L33107	♦SAM	158 - 78
L34024	♦SAM	159 - 34
L56001	♦SAM	158 - 79
LA3	STCE	97 - 79
LA3-02	♦STCE	97 - 78
LA5	STCE	97 - 90
LA5-02	♦STCE	97 - 85
LA6-14(A)	♦STCE	97 - 94
LA7	STCE	97 -100
LA7-01	♦STCE	97 - 97
LA8	STCE	97 -103
LA8-02	♦STCE	97 -101
LA10	STCE	98 - 2
LA10-02	♦STCE	97 -107
LA12	STCE	97 - 66
LA12-02	♦STCE	98 - 6
LA60(2)	♦LAD	97 - 62
LA63	♦LAD	97 - 83
LA65	♦LAD	97 - 95
LA68	♦LAD	98 - 4
LA162	♦LAD	98 - 3
LA163	♦LAD	98 - 18
LA167	♦LAD	98 - 34
LA209	HEI	129 - 48
LA215	♦LAD	98 - 39
LA220	♦LAD	98 - 46
LA235	♦LAD	98 - 50
LA410	♦LAD	98 - 56
LA430	♦LAD	98 - 49
LA609	HEI	129 - 47
LA702SN	HEI	129 - 28
LA709	HEI	129 - 44
LA809	♦HEI	129 - 49
LA2011	♦OAK	42 - 81
LA2011H	♦OAK	42 - 82
LA2021	♦OAK	70 - 31
LA2031	♦OAK	61 - 87
LA2041	♦OAK	56 - 31
LA2411	♦OAK	42 - 83
LA2411H	♦OAK	42 - 84
LA2421	♦OAK	70 - 32
LA2431	♦OAK	61 - 88
LA2441	♦OAK	56 - 32
LA2811	♦OAK	43 - 55
LA2811H	♦OAK	43 - 56
LA2821	♦OAK	70 - 92
LA2831	♦OAK	62 - 9
LA2841	♦OAK	56 - 45
LA3011	♦OAK	43 - 57
LA3011D	♦OAK	44 - 61
LA3011DH	♦OAK	44 - 62
LA3011H	♦OAK	43 - 58
LA3021	♦OAK	70 - 93
LA3021D	♦OAK	71 - 24
LA3031	♦OAK	62 - 10
LA3031D	♦OAK	62 - 11
LA3041	♦OAK	56 - 46
LA3041D	♦OAK	60 - 54

Δ-Registered with JEDEC by this manufacturer

♦-Mfr's data sheet available in microfilm service

1. TYPE No. CROSS INDEX

IN TYPE NUMBER SEQUENCE

TYPE No.	MFRS	Pg&Line
LA3312RGH	♦OAK	78 - 97
LA3611	♦OAK	43 - 59
LA3611H	♦OAK	43 - 60
LA3621	♦OAK	70 - 94
LA3631	♦OAK	62 - 12
LA3641	♦OAK	56 - 47
LA3711D	♦OAK	42 - 85
LA3711DH	♦OAK	42 - 86
LA3721D	♦OAK	70 - 33
LA3731D	♦OAK	61 - 89
LA3741D	♦OAK	56 - 48
LA4011	♦OAK	43 - 61
LA4011H	♦OAK	43 - 62
LA4031	♦OAK	61 - 90
LA4041	♦OAK	56 - 49
LA4211	♦OAK	43 - 63
LA4211H	♦OAK	43 - 64
LA4221	♦OAK	70 - 95
LA4231	♦OAK	62 - 13
LA4241	♦OAK	56 - 50
LA5011	♦OAK	43 - 65
LA5011D	♦OAK	44 - 63
LA5011DH	♦OAK	44 - 64
LA5011DO	♦OAK	47 - 5
LA5011H	♦OAK	43 - 66
LA5012RGH	♦OAK	78 - 98
LA5013D	♦OAK	49 - 2
LA5013DH	♦OAK	49 - 3
LA5021	♦OAK	70 - 96
LA5021D	♦OAK	71 - 25
LA5023D	♦OAK	73 - 94
LA5031	♦OAK	61 - 91
LA5031D	♦OAK	62 - 14
LA5033D	♦OAK	64 - 58
LA5041	♦OAK	56 - 51
LA5041D	♦OAK	57 - 14
LA5043D	♦OAK	58 - 80
LA5051D	♦OAK	54 - 1
LA5273	♦HITJ	96 - 18
LA5412RGH	♦OAK	78 - 99
LA5511D	♦OAK	55 - 38
LA5511DH	♦OAK	55 - 39
LA5513D	♦OAK	49 - 4
LA5513DH	♦OAK	49 - 5
LA5521D(3)	♦OAK	78 - 65
LA5523D	♦OAK	73 - 95
LA5531D	♦OAK	69 - 28
LA5533D	♦OAK	64 - 59
LA5541D	♦OAK	57 - 15
LA5543D	♦OAK	58 - 81
LA5711D	♦OAK	44 - 65
LA5711DH	♦OAK	44 - 66
LA5711H	♦OAK	43 - 67
LA5714	♦OAK	56 - 52
LA5721	♦OAK	70 - 97
LA5721D	♦OAK	71 - 26
LA5731	♦OAK	61 - 92
LA5731D	♦OAK	62 - 15
LA5741	♦OAK	56 - 53
LA5741D	♦OAK	57 - 16
LA5811	♦OAK	43 - 68
LA5811H	♦OAK	43 - 69
LA5821	♦OAK	70 - 98
LA5831	♦OAK	61 - 93
LA5841	♦OAK	56 - 54
LA6011	♦OAK	42 - 87
LA6011H	♦OAK	42 - 88
LA6021	♦OAK	70 - 34
LA6031	♦OAK	61 - 39
LA6041	♦OAK	56 - 33
LA6111	♦OAK	42 - 89
LA6111H	♦OAK	42 - 90
LA6121	♦OAK	70 - 35
LA6131	♦OAK	61 - 40
LA6141	♦OAK	56 - 34
LA6211	♦OAK	42 - 91
LA6211H	♦OAK	42 - 92
LA6212RGH	♦OAK	78 - 82
LA6221	♦OAK	70 - 36
LA6231	♦OAK	61 - 41
LA6241	♦OAK	56 - 35
LA6311	♦OAK	42 - 93
LA6311H	♦OAK	42 - 94
LA6321	♦OAK	70 - 37
LA6331	♦OAK	61 - 42
LA6341	♦OAK	56 - 36
LA6411	♦OAK	42 - 95
LA6411H	♦OAK	42 - 96
LA6421	♦OAK	70 - 38
LA6431	♦OAK	61 - 43
LA6441	♦OAK	56 - 37
LA6511D	♦OAK	42 - 97
LA6511DH	♦OAK	42 - 98
LA6521D	♦OAK	70 - 39
LA6531D	♦OAK	61 - 44
LA6541D	♦OAK	56 - 38
LA6611	♦OAK	43 - 70
LA6611H	♦OAK	42 - 99
LA6621	♦OAK	70 - 40
LA6631	♦OAK	61 - 45
LA6641	♦OAK	56 - 39
LA6711	♦OAK	42 -100
LA6711H	♦OAK	42 -101
LA6721	♦OAK	70 - 41
LA6731	♦OAK	61 - 46
LA6741	♦OAK	56 - 40
LA6811	♦OAK	41 - 96
LA6811H	♦OAK	41 - 97
LA6821	♦OAK	69 - 98
LA6831	♦OAK	61 - 47
LA6841	♦OAK	56 - 41
LA7011(2)	♦OAK	41 - 98
LA7011H	♦OAK	41 - 99
LA7021	♦OAK	69 - 99
LA7031(2)	♦OAK	60 -101
LA7041	♦OAK	56 - 10
LA7111	♦OAK	41 -100
LA7111H	♦OAK	41 -101
LA7121	♦OAK	69 -100
LA7131	♦OAK	60 -102
LA7141	♦OAK	56 - 11
LA7211	♦OAK	41 -102
LA7211H	♦OAK	41 -103
LA7221	♦OAK	69 -101
LA7231	♦OAK	60 -103
LA7241	♦OAK	56 - 12
LA7411	♦OAK	41 -104
LA7411H	♦OAK	41 -105
LA7421	♦OAK	69 -102
LA7431	♦OAK	60 -104
LA7441	♦OAK	56 - 13
LA7511	♦OAK	41 -106
LA7511H	♦OAK	41 -107
LA7521(2)	♦OAK	69 - 88
LA7531	♦OAK	60 - 89
LA7541	♦OAK	56 - 14
LA7611D	♦OAK	41 -108
LA7611DH	♦OAK	41 -109
LA7621D	♦OAK	69 -103
LA7631D	♦OAK	60 -105
LA7641D	♦OAK	56 - 15
LA8511	♦OAK	41 -110
LA8511H	♦OAK	42 - 1
LA8521	♦OAK	69 -104
LA8531	♦OAK	61 - 48
LA8541	♦OAK	56 - 42
LA8911D	♦OAK	44 - 67
LA8911DH	♦OAK	44 - 68
LA8921D	♦OAK	71 - 27
LA8931D	♦OAK	62 - 16
LA8941D	♦OAK	57 - 17
LA9011	♦OAK	42 -102
LA9011H	♦OAK	42 -103
LA9021	♦OAK	70 - 42
LA9031	♦OAK	61 - 49
LA9041	♦OAK	56 - 43
LA10001	♦OAK	51 - 77
LA10011	♦OAK	51 - 78
LA10021	♦OAK	75 -102
LA10031	♦OAK	66 - 9
LA10041	♦OAK	59 - 13
LA30001	♦OAK	43 - 71
LA30011	♦OAK	43 - 72
LA30021	♦OAK	70 - 99
LA30031	♦OAK	62 - 17
LA30041	♦OAK	56 - 55
LA40001	♦OAK	43 - 73
LA40011	♦OAK	43 - 74
LA40021	♦OAK	70 -100
LA40031	♦OAK	61 - 94
LA40041	♦OAK	56 - 56
LA42001	♦OAK	43 - 75
LA42011	♦OAK	43 - 76
LA42021	♦OAK	70 -101
LA42031	♦OAK	62 - 18
LA42041	♦OAK	56 - 57
LA50101	♦OAK	43 - 77
LA50111	♦OAK	43 - 78
LA50121	♦OAK	70 -102
LA50131	♦OAK	61 - 95
LA50141	♦OAK	56 - 58
LA50201	♦OAK	45 - 72
LA50211	♦OAK	45 - 73
LA50221	♦OAK	71 - 95
LA50231	♦OAK	62 - 79
LA50241	♦OAK	56 -103
LA50301	♦OAK	45 - 74
LA50311	♦OAK	45 - 75
LA50321	♦OAK	71 - 96
LA50331	♦OAK	62 - 80
LA50341	♦OAK	56 -104
LA50401	♦OAK	46 - 1
LA50411	♦OAK	46 - 2
LA50421	♦OAK	72 - 24
LA50431	♦OAK	62 - 99
LA50441	♦OAK	57 - 91
LA50501	♦OAK	46 - 3
LA50511	♦OAK	46 - 4
LA50521	♦OAK	72 - 25
LA50531	♦OAK	62 -100
LA50541	♦OAK	57 - 92
LA57001	♦OAK	43 - 79
LA57011	♦OAK	43 - 80
LA57021	♦OAK	70 -103
LA57031	♦OAK	70 -104
LA57041	♦OAK	56 - 59
LA57101	♦OAK	43 - 81
LA57111	♦OAK	43 - 82
LA57121	♦OAK	70 -105
LA57131	♦OAK	61 - 96
LAA1010	♦OAK	200 - 62
LAA1011	♦OAK	200 - 66
LAA1012	♦OAK	200 - 68
LAA1013	♦OAK	200 - 64
LAA1014	♦OAK	200 - 70
LAA1110	♦OAK	200 - 76
LAA1111	♦OAK	200 - 80
LAA1112	♦OAK	200 - 82
LAA1113	♦OAK	200 - 78
LAA1114	♦OAK	200 - 84
LAA1210	♦OAK	201 - 5
LAA1211	♦OAK	201 - 9
LAA1212	♦OAK	201 - 11
LAA1213	♦OAK	201 - 7
LAA1214	♦OAK	201 - 13
LAA2010	♦OAK	179 - 28
LAA2011	♦OAK	180 - 26
LAA2012	♦OAK	180 - 19
LAA2013	♦OAK	179 -105
LAA2014	♦OAK	180 - 27
LAA2110	♦OAK	179 - 29
LAA2111	♦OAK	180 - 28
LAA2112	♦OAK	180 - 20
LAA2113	♦OAK	179 -106
LAA2114	♦OAK	180 - 29
LAA3110	♦OAK	179 - 30
LAA3111	♦OAK	180 - 30
LAA3112	♦OAK	180 - 21
LAA3113	♦OAK	179 -107
LAA3114	♦OAK	180 - 31
LAA3210	♦OAK	179 - 31
LAA3211	♦OAK	180 - 32
LAA3212	♦OAK	180 - 22
LAA3213	♦OAK	179 -108
LAA3214	♦OAK	180 - 33
LAA3310	♦OAK	177 - 14
LAA3311	♦OAK	177 - 26
LAA3312	♦OAK	177 - 24
LAA3313	♦OAK	177 - 22
LAA3314	♦OAK	177 - 27
LAA3410	♦OAK	182 - 27
LAA3411	♦OAK	182 - 28
LAA3412	♦OAK	182 - 36
LAA3413	♦OAK	182 - 35
LAA3414	♦OAK	182 - 37
LAA3510	♦OAK	180 - 89
LAA3511	♦OAK	180 -102
LAA3512	♦OAK	180 -100
LAA3513	♦OAK	180 - 98
LAA3514	♦OAK	180 -103
LAA4010	♦OAK	183 - 86
LAA4011	♦OAK	184 - 14
LAA4012	♦OAK	184 - 15
LAA4013	♦OAK	184 - 12
LAA4014	♦OAK	184 - 18
LAA4110	♦OAK	185 - 61
LAA4111	♦OAK	186 - 11
LAA4112	♦OAK	186 - 12
LAA4113	♦OAK	186 - 8
LAA4114	♦OAK	186 - 17
LAA4210	♦OAK	185 - 62
LAA4211	♦OAK	186 - 13
LAA4212	♦OAK	186 - 14
LAA4213	♦OAK	186 - 9
LAA4214	♦OAK	186 - 18
LAA4610	♦OAK	184 - 45
LAA4611	♦OAK	184 - 58
LAA4612	♦OAK	184 - 59
LAA4613	♦OAK	184 - 56
LAA4614	♦OAK	184 - 62
LAA5010	♦OAK	187 - 87
LAA5011	♦OAK	188 - 13
LAA5012	♦OAK	188 - 9
LAA5013	♦OAK	187 -107
LAA5014	♦OAK	188 - 18
LAA5110	♦OAK	187 - 88
LAA5111	♦OAK	188 - 14
LAA5112	♦OAK	188 - 10
LAA5113	♦OAK	188 - 15
LAA5114	♦OAK	188 - 19
LAA5210	♦OAK	189 - 47
LAA5211	♦OAK	189 - 80
LAA5212	♦OAK	189 - 76
LAA5213	♦OAK	189 - 72
LAA5214	♦OAK	189 - 84
LAA5310	♦OAK	186 - 73
LAA5311	♦OAK	186 - 79
LAA5312	♦OAK	186 - 77
LAA5313	♦OAK	186 - 75
LAA5314	♦OAK	186 - 81
LAA5410	♦OAK	186 - 99
LAA5411	♦OAK	187 - 7
LAA5412	♦OAK	187 - 5
LAA5413	♦OAK	186 -105
LAA5414	♦OAK	187 - 9
LAA5510	♦OAK	189 - 48
LAA5511	♦OAK	189 - 81
LAA5512	♦OAK	189 - 77
LAA5513	♦OAK	189 - 73
LAA5514	♦OAK	189 - 85
LAA5610	♦OAK	191 - 25
LAA5611	♦OAK	191 - 27
LAA5612	♦OAK	191 - 31
LAA5613	♦OAK	191 - 29
LAA5614	♦OAK	191 - 32
LAA5710	♦OAK	192 - 94
LAA5711	♦OAK	193 - 5
LAA5712	♦OAK	193 - 16
LAA5713	♦OAK	193 - 14
LAA5714	♦OAK	193 - 17
LAA5810	♦OAK	199 - 68
LAA5811	♦OAK	199 - 72
LAA5812	♦OAK	199 - 76
LAA5813	♦OAK	199 - 74
LAA5814	♦OAK	199 - 77
LAA6010	♦OAK	193 - 67
LAA6011	♦OAK	193 - 69
LAA6012	♦OAK	193 - 75
LAA6013	♦OAK	193 - 73
LAA6014	♦OAK	193 - 76
LAA8010	♦OAK	197 - 67
LAA8011	♦OAK	197 - 90
LAA8012	♦OAK	197 -102
LAA8013	♦OAK	197 - 98
LAA8014	♦OAK	197 -106
LAA8110	♦OAK	197 - 68
LAA8111	♦OAK	197 - 91
LAA8112	♦OAK	197 -103
LAA8113	♦OAK	197 - 99
LAA8114	♦OAK	197 -107
LAAC3310	♦OAK	177 - 15
LAAC3311	♦OAK	177 - 28
LAAC3312	♦OAK	177 - 25
LAAC3313	♦OAK	177 - 23
LAAC3314	♦OAK	177 - 29
LAB10	♦OAK	93 - 78
LAB11	♦OAK	93 - 80
LAB12	♦OAK	94 - 21
LAB13	♦OAK	93 -109
LAB14	♦OAK	93 - 97
LAB500(2)	♦OAK	89 - 58
LAB501	♦OAK	89 - 61
LAB502	♦OAK	89 - 92
LAB503	♦OAK	89 - 81
LAB504	♦OAK	89 - 73
LAB2010	♦OAK	92 -106
LAB2011	♦OAK	92 -107
LAB2012	♦OAK	93 - 11
LAB2013	♦OAK	93 - 4
LAB2014	♦OAK	93 - 2
LAB3010	♦OAK	94 - 39
LAB3011	♦OAK	94 - 40
LAB3012	♦OAK	94 - 58
LAB3013	♦OAK	94 - 49
LAB3014	♦OAK	94 - 45
LAB4010	♦OAK	93 - 28
LAB4011	♦OAK	93 - 30
LAB4012	♦OAK	93 - 42
LAB4013	♦OAK	93 - 38
LAB4014	♦OAK	93 - 36
LAB4110	♦OAK	93 - 29
LAB4111	♦OAK	93 - 31
LAB4112	♦OAK	93 - 43
LAB4113	♦OAK	93 - 39
LAB4114	♦OAK	93 - 37
LAC1010	♦OAK	200 - 63
LAC1011	♦OAK	200 - 67
LAC1012	♦OAK	200 - 69
LAC1013	♦OAK	200 - 65
LAC1014	♦OAK	200 - 71
LAC1110	♦OAK	200 - 77
LAC1111	♦OAK	200 - 81
LAC1112	♦OAK	200 - 83
LAC1113	♦OAK	200 - 79
LAC1114	♦OAK	200 - 85
LAC1210	♦OAK	201 - 6
LAC1211	♦OAK	201 - 10
LAC1212	♦OAK	201 - 12
LAC1213	♦OAK	201 - 8
LAC1214	♦OAK	201 - 14
LAC2010(2)	♦OAK	179 - 32
LAC2011	♦OAK	180 - 34
LAC2012	♦OAK	180 - 23
LAC2013	♦OAK	179 -109
LAC2014	♦OAK	180 - 35
LAC3010	♦OAK	179 - 33
LAC3011	♦OAK	180 - 36
LAC3012	♦OAK	180 - 24
LAC3013	♦OAK	179 -110
LAC3014	♦OAK	180 - 37
LAC3110	♦OAK	179 - 34
LAC3111	♦OAK	180 - 38
LAC3112	♦OAK	180 - 25
LAC3113	♦OAK	180 - 1
LAC3114	♦OAK	180 - 39
LAC3410	♦OAK	182 - 15
LAC3411	♦OAK	182 - 16
LAC3412	♦OAK	182 - 21
LAC3413	♦OAK	182 - 20
LAC3414	♦OAK	182 - 22
LAC3510	♦OAK	180 - 90
LAC3511	♦OAK	180 -104
LAC3512	♦OAK	180 -101
LAC3513	♦OAK	180 - 99
LAC3514	♦OAK	180 -105
LAC4010	♦OAK	183 - 87
LAC4011	♦OAK	184 - 16
LAC4012	♦OAK	184 - 17
LAC4013	♦OAK	184 - 13
LAC4014	♦OAK	184 - 19
LAC4110	♦OAK	185 - 63
LAC4111	♦OAK	186 - 15
LAC4112	♦OAK	186 - 16
LAC4113	♦OAK	186 - 10
LAC4114	♦OAK	186 - 19
LAC4610	♦OAK	184 - 46
LAC4611	♦OAK	184 - 60
LAC4612	♦OAK	184 - 61
LAC4613	♦OAK	184 - 57
LAC4614	♦OAK	184 - 63
LAC5010	♦OAK	187 - 89
LAC5011	♦OAK	188 - 16
LAC5012	♦OAK	188 - 11
LAC5013	♦OAK	187 -108
LAC5014	♦OAK	188 - 20
LAC5110	♦OAK	187 - 90
LAC5111	♦OAK	188 - 17
LAC5112	♦OAK	188 - 12
LAC5113	♦OAK	187 -109
LAC5114	♦OAK	188 - 21
LAC5210	♦OAK	189 - 49
LAC5211	♦OAK	189 - 82
LAC5212	♦OAK	189 - 78
LAC5213	♦OAK	189 - 74
LAC5214	♦OAK	189 - 86
LAC5310	♦OAK	186 - 74
LAC5311	♦OAK	186 - 80
LAC5312	♦OAK	186 - 78
LAC5313	♦OAK	186 - 76
LAC5314	♦OAK	186 - 82
LAC5410	♦OAK	186 -100
LAC5411	♦OAK	187 - 8
LAC5412	♦OAK	187 - 6
LAC5413	♦OAK	186 -106
LAC5414	♦OAK	187 - 10
LAC5510	♦OAK	189 - 50
LAC5511	♦OAK	189 - 83
LAC5512	♦OAK	189 - 79
LAC5513	♦OAK	189 - 75
LAC5514	♦OAK	189 - 87
LAC5610	♦OAK	191 - 26
LAC5611	♦OAK	191 - 28
LAC5612	♦OAK	191 - 33
LAC5613	♦OAK	191 - 30
LAC5614	♦OAK	191 - 34
LAC5710	♦OAK	192 - 95
LAC5711	♦OAK	193 - 6
LAC5712	♦OAK	193 - 18
LAC5713	♦OAK	193 - 15
LAC5714	♦OAK	193 - 19
LAC5810	♦OAK	199 - 69
LAC5811	♦OAK	199 - 73
LAC5812	♦OAK	199 - 78
LAC5813	♦OAK	199 - 75
LAC5814	♦OAK	199 - 79
LAC6010	♦OAK	193 - 68
LAC6011	♦OAK	193 - 70
LAC6012	♦OAK	193 - 77
LAC6013	♦OAK	193 - 74
LAC6014	♦OAK	193 - 78
LAC8010	♦OAK	197 - 69
LAC8011	♦OAK	197 - 92
LAC8012	♦OAK	197 -104
LAC8013	♦OAK	197 -100
LAC8014	♦OAK	197 -108
LAC8110	♦OAK	197 - 70
LAC8111	♦OAK	197 - 93
LAC8112	♦OAK	197 -105
LAC8113	♦OAK	197 -101
LAC8114	♦OAK	197 -109
LAH494	♦OAK	44 - 69
LAH495	♦OAK	71 - 28
LAH496	♦OAK	62 - 19
LAH497	♦OAK	44 - 70
LAH498	♦OAK	71 - 29
LAH499	♦OAK	62 - 20
LAH501	♦OAK	44 - 71
LAH502	♦OAK	71 - 30
LAH503	♦OAK	62 - 21
LAH507	♦OAK	44 - 72
LAH508	♦OAK	71 - 31
LAH509	♦OAK	62 - 22
LAH1200	♦OAK	92 - 62
LAH1201	♦OAK	92 - 14
LAH1202	♦OAK	92 - 15
LAH1203	♦OAK	92 - 46
LAH1204	♦OAK	92 - 39
LAH1300	♦OAK	92 - 16
LAH1301	♦OAK	92 - 17
LAH1302	♦OAK	92 - 63
LAH1303	♦OAK	92 - 47
LAH1311	♦OAK	92 - 40
LAH1500	♦OAK	93 - 70
LAH1509	♦OAK	93 - 71
LAH1510	♦OAK	94 - 11
LAH1511	♦OAK	93 -102
LAH1512	♦OAK	93 - 92
LAH1600	♦OAK	92 - 18
LAH1601	♦OAK	92 - 64
LAH1605	♦OAK	92 - 19
LAH1606	♦OAK	92 - 48
LAH1607	♦OAK	92 - 41
LAH1700	♦OAK	93 - 72
LAH1701	♦OAK	93 - 73
LAH1710	♦OAK	94 - 12
LAH1711	♦OAK	93 -103
LAH1712	♦OAK	93 - 93
LAH1804	♦OAK	94 - 37
LAH1805	♦OAK	94 - 38
LAH1806	♦OAK	94 - 57
LAH1807	♦OAK	94 - 48
LAH1808	♦OAK	94 - 44
LAH3100	♦OAK	43 - 83
LAH3101	♦OAK	70 -106
LAH3102	♦OAK	61 - 97
LAH3103	♦OAK	56 - 60
LAH3105	♦OAK	43 - 84
LAH3800	♦OAK	91 - 48
LAH3801	♦OAK	91 - 49
LAH3802	♦OAK	91 - 96
LAH3803	♦OAK	91 - 78
LAH3804	♦OAK	91 - 70
LB1	STCE	97 - 58
LB1-02	♦STCE	97 - 59
LB1-15(A)	♦STCE	97 - 54
LB5272	♦HITJ	96 - 19
LC03-10	♦STCE	96 - 48
LC04-10	♦STCE	96 - 23
LC06-03	♦STCE	96 - 65
LC07-10	♦STCE	96 - 56
LC50-17	♦STCE	96 - 45
LC51-18	♦STCE	96 - 32
LC51-19	♦STCE	96 - 33
LC52-18	♦STCE	96 - 46
LC52-19	♦STCE	96 - 47
LC53-17	♦STCE	96 - 34
LC5272	♦HITJ	96 - 20
LC150931-111.XX/0S		
	PHIN	204 - 53
LC241440-101.15/0S		
♦APX	♦PHIN	206 - 61
	♦VALG	
LC283020-300.15/0S		
♦APX	♦PHIN	210 - 75
	♦VALG	
LC283020-300.28/0E		
♦APX	♦PHIN	210 - 76
	♦VALG	
LC283020-301.15/1S		
cont.next page		

Δ-Registered with JEDEC by this manufacturer

♦-Mfr's data sheet available in microfilm service

1. TYPE No. CROSS INDEX

IN TYPE NUMBER SEQUENCE

TYPE No.	MFRS	Pg&Line
LC283020-301.15/1S (cont.)	♦APX ♦PHIN ♦VALG	210 - 77
LC283020-301.28/1E	♦APX ♦PHIN ♦VALG	210 - 78
LC382040-401.15/0S	♦APX ♦PHIN ♦VALG	207 - 51
LC382040-401.28/0E	♦APX ♦PHIN ♦VALG	207 - 52
LC382080-411.15/0S	♦APX ♦PHIN ♦VALG	205 -106
LC382080-411.28/0E	♦APX ♦PHIN	205 -107
LC382232-700.21/0S	♦APX ♦PHIN	207 - 71
LC382232-700.27/0E	♦APX ♦PHIN	207 - 72
LC512332-300.15/0S	♦APX ♦PHIN	207 - 96
LC512332-300.21/0S	♦APX ♦PHIN	207 - 97
LC513000-300.15/0S	♦APX ♦PHIN	222 - 64
LC513000-300.28/0E	♦APX	222 - 63
LC513031-300.15/1S	♦APX ♦PHIN	211 - 69
LC513031-300.28/1E	♦APX ♦PHIN	211 - 70
LC513031-302.15/1S	♦APX ♦PHIN	211 - 71
LC513031-302.27/1E	♦APX ♦PHIN	211 - 72
LC513031-302.28/1E	♦APX ♦PHIN	211 - 73
LC513031-303.15/0S	♦APX ♦PHIN	211 - 74
LC513031-303.28/0E	♦APX ♦PHIN	211 - 75
LC513031-307.15/0S	♦APX ♦MULB ♦PHIN ♦VALG	211 - 11
LC513031-307.28/0E	♦APX ♦MULB ♦VALG	211 - 12
LC513031-309.15/0S	♦APX ♦MULB ♦PHIN ♦VALG	211 - 13
LC513031-309.28/0E	♦APX ♦MULB ♦PHIN ♦VALG	211 - 14
LC513031-320.15/0S	♦MULB ♦PHIN ♦VALG	208 - 80
LC513031-390.15/0S	♦MULB ♦PHIN ♦VALG	210 - 58
LC513031-390.28/0E	♦MULB ♦PHIN ♦VALG	210 - 57
LC513040-301.15/1S	♦APX ♦PHIN	211 - 76
LC513040-301.21/1S	♦APX ♦PHIN	211 - 77
LC513040-301.27/1E	♦APX ♦PHIN	211 - 78
LC513040-301.28/1E	♦APX ♦PHIN	211 - 79
LC513040-303.15/0S	♦APX ♦PHIN	211 - 80
LC513040-303.28/0E	♦APX ♦PHIN	211 - 81
LC513041-300.15/1S	♦APX ♦PHIN	208 - 85
LC513041-300.28/1E	♦APX ♦PHIN	208 - 86
LC513041-301.15/0S	♦APX ♦PHIN	208 - 87
LC513041-301.28/0E	♦APX ♦PHIN	208 - 88
LC513041-320.15/0S	♦APX	210 - 38
LC513050-300.15/1S	♦APX ♦MULB ♦PHIN ♦RTCF ♦VALG	208 - 89
LC513050-300.28/1E	♦APX ♦MULB ♦PHIN ♦RTCF ♦VALG	208 - 90
LC518000-300.15/1S	♦APX	221 - 91
LC518000-300.28/1E	♦APX	221 - 92
LC522232-300.21/0S	♦APX ♦PHIN	208 - 81
LC522232-300.27/0E	♦APX ♦PHIN	208 - 82
LC554731-311.15/0S	PHIN	222 - 82
LC554731-312.15/0S	♦APX ♦MULB ♦PHIN ♦VALG	205 - 44
LC703000-300.15/1S	♦APX ♦PHIN	222 - 77
LC703000-300.28/1E	♦APX	222 - 75
LC703060-301.15/1S	♦APX ♦PHIN	213 - 38
LC703060-301.28/1E	♦APX ♦PHIN	213 - 39
LC703831-300.15/1S	♦APX ♦PHIN	215 - 76
LC703831-300.28/1E	♦APX ♦PHIN	215 - 77
LC703840-300.15/1S	♦APX ♦PHIN	215 - 79
LC703840-300.27/1E	♦APX ♦PHIN	215 - 80
LC703840-300.28/1E	♦APX ♦PHIN	215 - 81
LC943080-301.15/1S	♦APX ♦PHIN	213 - 63
LC943080-301.27/1E	♦APX ♦PHIN	213 - 64
LC943080-301.28/1E	♦APX ♦PHIN	213 - 65
LC943860-301.28/1E	♦MULB ♦PHIN ♦RTCF ♦VALG	217 - 78
LC7020160-412.15/0S	♦APX ♦PHIN	206 - 15
LC7020160-412.28/0E	♦APX ♦PHIN	206 - 16
LC7020160-430.15/0S	♦APX ♦PHIN	206 - 17
LC7020160-430.28/0E	♦APX ♦PHIN	206 - 18
LC7030160-340.15/0S	♦MULB ♦PHIN	222 - 13
LC07610110-300.15/1S	♦APX ♦PHIN	219 - 60
LC07610110-300.28/1E	♦APX ♦PHIN	219 - 61
LC9430160-344.15/0S	♦APX ♦PHIN	221 - 41
LC9430160-344.28/0E	♦APX ♦PHIN	221 - 42
LC11402600-310.15/0S	♦APX ♦PHIN	222 - 76
LC11402600-310.28/0E	♦APX ♦PHIN	222 - 74
LC11404650-301.15/1S	♦APX ♦PHIN	219 - 19
LC11404650-301.28/1E	♦APX ♦PHIN	219 - 20
LCD403-91	♦TSEJ	208 - 42
LCD405-91	♦TSEJ	208 - 93
LCD410-91	♦TSEJ	210 - 59
LCD411-91	♦TSEJ	207 - 60
LCD412-01	♦TSEJ	205 - 53
LCD413-91	♦TSEJ	207 - 59
LCD414-01	♦TSEJ	214 - 61
LCD415-11	♦TSEJ	208 - 79
LCD417-11	♦TSEJ	210 - 52
LCD422-01	♦TSEJ	207 - 58
LCD423-62	♦TSEJ	205 - 52
LCD428-01	♦TSEJ	206 - 54
LCD429-01	♦TSEJ	208 - 92
LCD431-01	♦TSEJ	214 - 60
LCD435-01	♦TSEJ	206 - 63
LCD436-01	♦TSEJ	206 - 62
LCD437-01	♦TSEJ	206 - 64
LCD438-01	♦TSEJ	208 - 72
LCD440-01	♦TSEJ	208 - 83
LCD441-01	♦TSEJ	208 - 84
LCD444-01	♦TSEJ	210 - 53
LCD445-11	♦TSEJ	213 - 66
LCD446-11	♦TSEJ	214 - 62
LCD512-01	♦TSEJ	222 - 21
LCD513-01	♦TSEJ	222 - 23
LCD514-01	♦TSEJ	222 - 25
LCD517-02	♦TSEJ	208 - 63
LCD522-01	♦TSEJ	220 - 84
LCD523-01	♦TSEJ	220 - 86
LCD524-01	♦TSEJ	220 - 88
LCD606-51	♦TSEJ	208 - 78
LCD607-51	♦TSEJ	205 - 28
LCD611-01	♦TSEJ	208 - 70
LCD612-01	♦TSEJ	207 - 84
LCD615-81	♦TSEJ	210 - 60
LCD703-54	♦TSEJ	204 - 67
LCD704-54	♦TSEJ	204 - 68
LCD708-52	♦TSEJ	206 - 14
LCD709-54	♦TSEJ	204 - 69
LCD711-51	♦TSEJ	205 - 6
LCD713-51	♦TSEJ	204 - 41
LCD714-51	♦TSEJ	205 - 7
LCD822-55	♦TSEJ	205 - 95
LCD825-54	♦TSEJ	204 - 76
LCD825-81	♦TSEJ	204 - 77
LCD829-52	♦TSEJ	206 - 25
LCD830-54	♦TSEJ	205 - 93
LCD831-51	♦TSEJ	205 - 43
LCD832-51	♦TSEJ	205 - 1
LCD834-51	♦TSEJ	206 - 6
LCD834-81	♦TSEJ	204 - 22
LCD835-52	♦TSEJ	206 - 7
LCD836-51	♦TSEJ	206 - 8
LCD838-51	♦TSEJ	204 - 91
LCD840-51	♦TSEJ	205 - 2
LCD840-81	♦TSEJ	204 - 23
LCD844-81	♦TSEJ	204 - 4
LCD845-51	♦TSEJ	205 - 3
LCD846-51	♦TSEJ	205 - 4
LCD847-81	♦TSEJ	204 - 27
LCD848-81	♦TSEJ	204 - 24
LCD850-51	♦TSEJ	205 - 5
LCD850-81	♦TSEJ	204 - 25
LCD852-81	♦TSEJ	204 - 28
LCD902-54	♦TSEJ	205 - 96
LCD905-52	♦TSEJ	205 - 94
LCD907-52	♦TSEJ	204 - 26
LCD913-51	♦TSEJ	205 - 10
LCD918-81	♦TSEJ	206 - 26
LCD920-81	♦TSEJ	206 - 27
LCM401	♦TSEJ	205 - 99
LCM402	♦TSEJ	207 - 57
LCM405	♦TSEJ	208 - 91
LCM412	♦TSEJ	205 -100
LCM422	♦TSEJ	204 - 31
LCM435	♦TSEJ	204 - 29
LCM436	♦TSEJ	204 - 30
LCM440	♦TSEJ	204 - 32
LCM441	♦TSEJ	204 - 33
LCM512-01A	♦TSEJ	222 - 22
LCM513-01A	♦TSEJ	222 - 24
LCM514-01A	♦TSEJ	222 - 27
LCM522-01A	♦TSEJ	220 - 85
LCM523-01A	♦TSEJ	220 - 87
LCM524-01A	♦TSEJ	220 - 89
LCW10	♦LAD	97 - 35
LCW10A	♦LAD	96 - 83
LCW10B	♦LAD	96 - 84
LCW10C	♦LAD	96 - 85
LCW10D	♦LAD	96 - 86
LCW10F	♦LAD	96 - 35
LCW10FA	LAD	96 - 27
LCW10FB	LAD	96 - 28
LCW10FC	LAD	96 - 29
LCW10FD	LAD	96 - 30
LD2-0	♦CENB	128 - 5
LD2-1	♦CENB	128 - 6
LD2-2	♦CENB	128 - 7
LD2-3	♦CENB	128 - 8
LD2-4	♦CENB	128 - 9
LD2-5T	CENB	128 - 12
LD3-5A	CENB	128 - 18
LD4-5A	CENB	128 - 24
LD5-5A	CENB	128 - 38
LD12-5A	♦CENB	128 - 46
LD16-5A	♦CENB	128 - 47
LD20-0	♦CENB	128 - 50
LD20-1	♦CENB	128 - 51
LD20-2	♦CENB	128 - 52
LD20-3	♦CENB	128 - 53
LD20-4	♦CENB	128 - 54
LD20-5	CENB	128 - 55
LD50-5	CENB	128 - 71
LD60	♦LAD	97 - 68
LD61	♦LAD	97 - 63
LD62	♦LAD	97 - 87
LD63	♦LAD	97 - 91
LD65	♦LAD	97 -109
LD66	♦LAD	97 -102
LD67	♦LAD	98 - 15
LD68	♦LAD	98 - 16
LD160	♦LAD	97 - 86
LD161(1)	♦LAD	60 -109
LD162(1)	♦LAD	98 - 9
LD163	♦LAD	98 - 24
LD164	♦LAD	98 - 26
LD166	♦LAD	98 - 29
LD167	♦LAD	98 - 40
LD168	♦LAD	98 - 44
LD210	♦LAD	98 - 27
LD211	♦LAD	98 - 38
LD212	♦LAD	98 - 45
LD213	♦LAD	98 - 51
LD214	♦LAD	98 - 32
LD214S	♦LAD	98 - 33
LD215	♦LAD	98 - 42
LD215S	♦LAD	98 - 43
LD220	♦LAD	98 - 48
LD224-8S	♦LAD	98 - 47
LD235	♦LAD	98 - 54
LD242-2	♦SIEG ♦SIEX	86 - 68
LD242-3	♦SIEG ♦SIEX	86 - 70
LD260	♦SIEG ♦SIEX	89 - 25
LD261-4	♦SIEG ♦SIEX	85 - 85
LD261-5	♦SIEG ♦SIEX	86 - 23
LD261-6	♦SIEG ♦SIEX	86 - 38
LD262	♦SIEG ♦SIEX	89 - 4
LD263	♦SIEG ♦SIEX	89 - 7
LD264	♦SIEG ♦SIEX	89 - 10
LD265	♦SIEG ♦SIEX	89 - 13
LD266	♦SIEG ♦SIEX	89 - 15
LD267	♦SIEG ♦SIEX	89 - 17
LD268	♦SIEG ♦SIEX	89 - 19
LD269	♦SIEG ♦SIEX	89 - 22
LD271	♦SIEG ♦SIEX	87 - 8
LD271H	♦SIEG ♦SIEX	87 - 45
LD271L	♦SIEG ♦SIEX	87 - 9
LD271LH	♦SIEX	87 - 46
LD273	♦SIEG ♦SIEX	87 - 95
LD274	♦SIEX	87 - 13
LD330	♦LAD	98 - 52
LD360	♦LAD	98 - 55
LD410	♦LAD	98 - 57
LD430	♦LAD	98 - 53
LD1005	♦SIEG ♦SIEX	79 - 49
LD1006	♦SIEG ♦SIEX	79 - 55
LD1007	♦SIEG ♦SIEX	79 - 60
LD1103	♦SIEG ♦SIEX	79 - 13
LD1104	♦SIEG ♦SIEX	79 - 29
LD1105	♦SIEG ♦SIEX	79 - 51
LD1133	♦SIEG ♦SIEX	79 - 12
LD1134	♦SIEG ♦SIEX	79 - 28
LD1135	♦SIEG ♦SIEX	79 - 50
LD8164	♦NECJ	230 - 30
LD8180	♦NECJ	230 - 39
LD8185	♦NECJ	228 - 91
LD8191	♦NECJ	229 -105
LD8191/FIP9A5		226 - 68
LD8196	♦NECJ	229 - 58
LD8197A	♦NECJ	229 - 95
LD8197A/FIP12A4		226 - 10
LD8200	♦NECJ	227 - 28
LD8213	♦NECJ	229 - 12
LD8214	♦NECJ	230 - 78
LD8217	♦NECJ	230 - 80
LD8221	♦NECJ	229 - 21
LD8224	♦NECJ	226 - 77
LD8225	♦NECJ	226 - 21
LD8225/FIP8A5	NECJ	226 - 12
LD8227	♦NECJ	229 - 3
LD8228	♦NECJ	226 - 63
LD8230	♦NECJ	228 - 27
LD8231	♦NECJ	226 - 69
LD8231/FIP9C5		226 - 26
LD8232	♦NECJ	230 - 6
LD8241	♦NECJ	229 - 13
LD81971/FIP12A4		226 - 11
LDB5410(A)	NECJ ♦SIEG ♦SIEX	78 - 71
LDF163	♦LAD	98 - 19
LDF167	♦LAD	98 - 30
LDG471	♦SIEG ♦SIEX	71 - 34
LDG472	♦SIEG ♦SIEX	91 - 30
LDG473	♦SIEG ♦SIEX	91 - 42
LDG474	♦SIEG ♦SIEX	91 - 97
LDG1151	♦SIEG ♦SIEX	75 - 22
LDG1152	♦SIEG ♦SIEX	76 - 81
LDG1153	♦SIEG ♦SIEX	77 - 48
LDG1251	♦SIEG ♦SIEX	75 - 24
LDG2330	♦SIEX	74 - 66
LDG3901	♦SIEG ♦SIEX	72 - 97
LDG3902	♦SIEG ♦SIEX	74 - 56
LDG3903	♦SIEG ♦SIEX	75 - 21
LDG5071	♦SIEG ♦SIEX	75 - 25
LDG5072	♦SIEG ♦SIEX	76 - 84
LDG5171	♦SIEG ♦SIEX	75 - 26
LDG5172	♦SIEG ♦SIEX	76 - 85
LDG5591	♦SIEG ♦SIEX	78 - 29
LDG5592	♦SIEG ♦SIEX	78 - 58
LDG5901	♦SIEG ♦SIEX	72 - 92
LDG5902	♦SIEG ♦SIEX	74 - 49
LDG5903	♦SIEG ♦SIEX	75 - 20
LDH1111	♦SIEG ♦SIEX	58 - 60
LDH1112	♦SIEG ♦SIEX	59 - 4
LDH1113	♦SIEG ♦SIEX	59 - 32
LDH2310	♦SIEG ♦SIEX	58 - 26
LDH3601	♦SIEG ♦SIEX	58 - 21
LDH3602	♦SIEG ♦SIEX	58 - 68
LDH3603	♦SIEG ♦SIEX	59 - 17
LDH5021	♦SIEG ♦SIEX	58 - 34
LDH5022	♦SIEG ♦SIEX	59 - 7
LDH5023	♦SIEG ♦SIEX	59 - 33
LDH5121	♦SIEG ♦SIEX	58 - 35
LDH5122	♦SIEG ♦SIEX	59 - 8
LDH5123	♦SIEG ♦SIEX	59 - 34
LDH5191	♦SIEG ♦SIEX	59 - 61
LDH5192	♦SIEG ♦SIEX	59 -102
LDH5193	♦SIEG ♦SIEX	60 - 9
LDH5601	♦SIEG SIEX	58 - 20
LDH5602	♦SIEG ♦SIEX	58 - 67
LDR03	MULB PHIN RTCF VALG	130 - 43
LDR05	MULB PHIN RTCF VALG	130 - 44
LDR07	MULB PHIN RTCF VALG	130 - 45
LDR461	♦SIEG ♦SIEX	44 - 76
LDR462	♦SIEX	91 - 23
LDR463	♦SIEX	91 - 35
LDR464	♦SIEX	91 - 52
LDR1101	♦SIEG ♦SIEX	47 - 34
LDR1102	♦SIEG ♦SIEX	50 - 56
LDR1103	♦SIEG ♦SIEX	52 - 23
LDR1201	♦SIEG ♦SIEX	47 - 45
LDR3701	♦SIEG ♦SIEX	42 -106
LDR3702	♦SIEG ♦SIEX	44 - 88
LDR4555	♦SIEG ♦SIEX	92 - 31
LDR5001	♦SIEG ♦SIEX	47 - 46
LDR5002	♦SIEG ♦SIEX	50 - 98
LDR5003	♦SIEG ♦SIEX	52 - 25
LDR5091	♦SIEG ♦SIEX	50 - 99
LDR5092	♦SIEG ♦SIEX	52 - 26
LDR5093	♦SIEG ♦SIEX	53 - 41
LDR5101	♦SIEG ♦SIEX	47 - 47
LDR5102	♦SIEG ♦SIEX	50 -100
LDR5103	♦SIEG ♦SIEX	52 - 27
LDR5701	♦SIEG ♦SIEX	42 -105
LDR5702	♦SIEG ♦SIEX	44 - 87
LDRG2340	♦SIEG ♦SIEX	79 - 37
LDT350	♦LAD	88 - 85
LDT363B	♦LAD	96 - 13
LDT363C	♦LAD	96 - 14
LDT363D	♦LAD	96 - 15
LDT387	♦LAD	81 - 67
LDY481	♦SIEG ♦SIEX	60 - 88
LDY1131	♦SIEG ♦SIEX	63 - 21
LDY1132	♦SIEG ♦SIEX	65 - 27
LDY1133	♦SIEG ♦SIEX	66 - 66
LDY1231	♦SIEG ♦SIEX	63 - 70
LDY2320	♦SIEG ♦SIEX	65 - 18
LDY3801	♦SIEG ♦SIEX	63 - 61
LDY3802	♦SIEG ♦SIEX	65 - 10
LDY3803	♦SIEG ♦SIEX	66 - 4
LDY5061	♦SIEG ♦SIEX	63 - 26
LDY5062	♦SIEG ♦SIEX	65 - 88
LDY5161	♦SIEG ♦SIEX	63 - 27
LDY5162	♦SIEG ♦SIEX	65 - 89
LDY5163	♦SIEG ♦SIEX	66 - 72
LDY5391	♦SIEG ♦SIEX	67 - 68
LDY5392	♦SIEG ♦SIEX	68 - 14
LDY5393	♦SIEG ♦SIEX	68 - 45
LDY5801	♦SIEG ♦SIEX	63 - 51
LDY5802	♦SIEG ♦SIEX	65 - 3
LDY5803	♦SIEG ♦SIEX	66 - 3
LE17	♦STCE	98 - 17
LE17-02	STCE	89 - 5
LE25	♦STCE	98 - 22

Δ-Registered with JEDEC by this manufacturer

♦-Mfr's data sheet available in microfilm service

1. TYPE No. CROSS INDEX

IN TYPE NUMBER SEQUENCE

TYPE No.	MFRS	Pg&Line
LE25-02	STCE	89 - 8
LEA500	♦HEI	82 - 93
LEA502SN	HEI	89 - 6
LEA503SN	HEI	89 - 9
LEA504SN	HEI	89 - 11
LEA505S	HEI	89 - 14
LEA506S	HEI	89 - 16
LEA507S	HEI	89 - 18
LEA508	HEI	89 - 20
LEA509	HEI	89 - 23
LEA510	HEI	89 - 26
LEA511	HEI	89 - 27
LEA512	HEI	89 - 30
LED30	REC	179 - 7
LED30R	REC	179 - 8
LED31	REC	179 - 9
LED31R	REC	179 - 10
LED32	REC	178 - 60
LED33	REC	178 - 61
LED34	REC	178 - 87
LED35	REC	178 - 88
LED36	REC	178 - 89
LED37	REC	178 - 90
LED50	REC	187 - 75
LED50R	REC	187 - 76
LED51	REC	187 - 77
LED51R	REC	187 - 78
LED55B	♦GESY	85 - 41
LED55BF	♦GESY	85 - 42
LED55C	♦GESY	86 - 4
LED55CF	♦GESY	86 - 5
LED56	♦GESY	84 - 31
LED56F	♦GESY	84 - 32
LED1011	REC	40 - 43
LED1011G	REC	40 - 33
LED1012	REC	48 - 2
LED1012G	REC	48 - 3
LED1013	REC	48 - 4
LED1013G	REC	48 - 5
LED1014	REC	48 - 6
LED1014G	REC	48 - 7
LED1021	REC	69 - 42
LED1022	REC	73 - 23
LED1023	REC	73 - 24
LED1024	REC	73 - 25
LED1031	REC	60 - 61
LED1032	REC	63 -109
LED1033	REC	63 -110
LED1034	REC	64 - 1
LED1041	REC	55 - 65
LED1042	REC	57 - 60
LED1043	REC	57 - 61
LED1044	REC	57 - 62
LED1111	REC	48 - 58
LED1111G	REC	48 - 59
LED1112	REC	48 - 60
LED1112G	REC	48 - 61
LED1113	REC	48 - 62
LED1113G	REC	48 - 63
LED1114	REC	48 - 64
LED1114G	REC	48 - 65
LED1121	REC	73 - 55
LED1122	REC	73 - 56
LED1123	REC	73 - 57
LED1124	REC	73 - 58
LED1131	REC	64 - 30
LED1132	REC	64 - 31
LED1133	REC	64 - 32
LED1134	REC	64 - 33
LED1141	REC	57 - 83
LED1142	REC	57 - 84
LED1143	REC	57 - 85
LED1144	REC	57 - 86
LED1211	REC	47 - 96
LED1211G	REC	47 - 97
LED1212	REC	47 - 98
LED1212G	REC	47 - 99
LED1213	REC	47 -100
LED1213G	REC	47 -101
LED1214	REC	47 -102
LED1214G	REC	47 -103
LED1221	REC	73 - 14
LED1222	REC	73 - 15
LED1223	REC	73 - 16
LED1224	REC	73 - 17
LED1231	REC	63 -100
LED1232	REC	63 -101
LED1233	REC	63 -102
LED1234	REC	63 -103
LED1241	REC	57 - 50
LED1242	REC	57 - 51
LED1243	REC	57 - 52
LED1244	REC	57 - 53
LED1311	REC	47 -104
LED1311G	REC	47 -105
LED1312	REC	47 -106
LED1312G	REC	47 -107
LED1313	REC	47 -108
LED1313G	REC	47 -109
LED1314	REC	47 -110
LED1314G	REC	48 - 1
LED1321	REC	73 - 18
LED1322	REC	73 - 19
LED1323	REC	73 - 20
LED1324	REC	73 - 21
LED1331	REC	63 -104
LED1332	REC	63 -105
LED1333	REC	63 -106
LED1334	REC	63 -107
LED1341	REC	57 - 54
LED1342	REC	57 - 55
LED1343	REC	57 - 56
LED1344	REC	57 - 57
LED1411	REC	48 - 8

TYPE No.	MFRS	Pg&Line
LED1411G	REC	48 - 9
LED1412	REC	48 - 10
LED1412G	REC	48 - 11
LED1413	REC	48 - 12
LED1413G	REC	48 - 13
LED1414	REC	48 - 14
LED1414G	REC	48 - 15
LED1421	REC	73 - 26
LED1422	REC	73 - 27
LED1423	REC	73 - 28
LED1424	REC	73 - 29
LED1431	REC	64 - 2
LED1432	REC	64 - 3
LED1433	REC	64 - 4
LED1434	REC	64 - 5
LED1441	REC	57 - 63
LED1442	REC	57 - 64
LED1443	REC	57 - 65
LED1444	REC	57 - 66
LED1511G	REC	48 - 66
LED1512	REC	48 - 67
LED1512G	REC	48 - 68
LED1513	REC	48 - 69
LED1513G	REC	48 - 70
LED1514	REC	48 - 71
LED1514G	REC	48 - 72
LED1521	REC	73 - 59
LED1522	REC	73 - 60
LED1523	REC	73 - 61
LED1524	REC	73 - 62
LED1531	REC	64 - 34
LED1532	REC	64 - 35
LED1533	REC	64 - 36
LED1534	REC	64 - 37
LED1541	REC	57 - 87
LED1542	REC	57 - 88
LED1543	REC	57 - 89
LED1544	REC	57 - 90
LED1611	REC	48 - 16
LED1611G	REC	48 - 17
LED1612	REC	48 - 18
LED1612G	REC	48 - 19
LED1613	REC	48 - 20
LED1613G	REC	48 - 21
LED1614	REC	48 - 22
LED1614G	REC	48 - 23
LED1621	REC	73 - 30
LED1622	REC	73 - 31
LED1623	REC	73 - 32
LED1624	REC	73 - 33
LED1631	REC	64 - 6
LED1632	REC	64 - 7
LED1633	REC	64 - 8
LED1634	REC	64 - 9
LED1641	REC	57 - 67
LED1643	REC	57 - 44
LED1644	REC	57 - 45
LED1811	REC	48 - 36
LED1811G	REC	48 - 37
LED1812	REC	48 - 38
LED1812G	REC	48 - 39
LED1813	REC	48 - 40
LED1813G	REC	48 - 41
LED1814	REC	48 - 42
LED1814G	REC	48 - 43
LED1821	REC	73 - 47
LED1822	REC	73 - 48
LED1823	REC	73 - 49
LED1824	REC	73 - 50
LED1831	REC	64 - 22
LED1832	REC	64 - 23
LED1833	REC	64 - 24
LED1834	REC	64 - 25
LED1841	REC	57 - 76
LED1841R	REC	48 - 44
LED1842	REC	57 - 77
LED1842R	REC	48 - 45
LED1843	REC	57 - 78
LED1843R	REC	48 - 46
LED1844	REC	57 - 79
LED1844R	REC	48 - 47
LED1911	REC	47 - 77
LED1911G	REC	47 - 78
LED1912	REC	47 - 79
LED1912G	REC	47 - 80
LED1913	REC	47 - 81
LED1913G	REC	47 - 82
LED1914	REC	48 - 34
LED1914G	REC	48 - 35
LED1921	REC	73 - 43
LED1922	REC	73 - 44
LED1923	REC	73 - 45
LED1924	REC	73 - 46
LED1931	REC	64 - 18
LED1932	REC	64 - 19
LED1933	REC	64 - 20
LED1934	REC	64 - 21
LED1941	REC	57 - 72
LED1942	REC	57 - 73
LED1943	REC	57 - 74
LED1944	REC	57 - 75
LED2011	REC	48 - 24
LED2011G	REC	48 - 25
LED2012	REC	48 - 26
LED2012G	REC	48 - 27
LED2013	REC	48 - 28
LED2013G	REC	48 - 29
LED2014	REC	48 - 30
LED2014G	REC	48 - 31
LED2021	REC	73 - 34
LED2022	REC	73 - 35
LED2023	REC	73 - 36
LED2024	REC	73 - 37
LED2031	REC	64 - 10

TYPE No.	MFRS	Pg&Line
LED2032	REC	64 - 11
LED2033	REC	64 - 12
LED2034	REC	64 - 13
LED2041	REC	55 - 61
LED2042	REC	55 - 62
LED2043	REC	55 - 63
LED2044	REC	55 - 64
LED2111	REC	40 - 34
LED2111G	REC	40 - 35
LED2112	REC	40 - 36
LED2112G	REC	40 - 37
LED2113	REC	40 - 38
LED2113G	REC	40 - 39
LED2114	REC	48 - 32
LED2114G	REC	48 - 33
LED2121	REC	73 - 38
LED2122	REC	73 - 39
LED2123	REC	73 - 40
LED2124	REC	73 - 41
LED2131	REC	64 - 14
LED2132	REC	64 - 15
LED2133	REC	64 - 16
LED2134	REC	64 - 17
LED2141	REC	57 - 68
LED2142	REC	57 - 69
LED2143	REC	57 - 70
LED2144	REC	57 - 71
LED3511	REC	45 - 91
LED3521	REC	72 - 6
LED3531	REC	63 - 62
LED3541	REC	56 - 99
LED3541R	REC	45 - 92
LED3665	REC	40 - 44
LED5665	REC	40 - 45
LED6280	REC	47 - 6
LED6281	REC	47 - 7
LED6282	REC	47 - 24
LED6286	REC	63 - 47
LED6287	REC	72 - 81
LF75	STCE	98 - 35
LF100	STCE	98 - 41
LF4050PJ	SRPJ	204 - 56
LF4055TJ	SRPJ	204 - 73
LF4070NJ	SRPJ	204 - 63
LF5001QE	SRPJ	222 - 72
LF5001QF	SRPJ	222 - 73
LF8060SE	SRPJ	206 - 9
LF8065SE	SRPJ	206 - 10
LF8070SE	SRPJ	206 - 13
LF8075SE	SRPJ	204 -105
LF8080SE	SRPJ	204 - 75
LF8095SE	SRPJ	206 - 1
LF8100SE	SRPJ	206 - 2
LF8110SE	SRPJ	206 - 3
LF8120SS	SRPJ	206 - 4
LF8130QE	SRPJ	204 -106
LF8140SE	SRPJ	206 - 5
LF8200SE	SRPJ	204 -107
LF8220SS	SRPJ	204 -108
LF8240SE	SRPJ	204 -109
LG1000	MAI	231 - 90
LG1050	MAI	231 - 91
LG1100	MAI	231 - 92
LG1150	MAI	231 - 93
LG3369EO	♦SIEX	71 - 41
LG3369FO	♦SIEX	72 - 32
LG5411LO(A)	♦SIEX	77 - 39
LG5411NO(A)	♦SIEX	77 - 53
LG5411PO(A)	♦SIEX	78 - 30
LG5469EO	♦SIEX	71 - 42
LG5469FO	♦SIEX	72 - 34
LGB480	SIEG	74 - 71
LH65-20	♦LAD	97 -104
LH65-30	♦LAD	97 - 67
LH65-40	♦LAD	97 -105
LH65-50	♦LAD	97 -106
LH67-30	♦LAD	98 - 12
LH67-40	♦LAD	98 - 13
LH67-50	♦LAD	98 - 14
LIODS-HF	UDT	101 - 30
LIODS-LF	UDT	111 - 42
LLL7	♦REC	49 -100
LLL7A	♦REC	42 - 36
LLL9-1	♦REC	49 - 70
LLL9-3	♦REC	49 - 71
LLL9A1	♦REC	45 - 50
LLL9A3	♦REC	45 - 51
LLL17	♦REC	74 - 68
LLL19-1	♦REC	74 - 58
LLL27	♦REC	62 - 94
LLL29-1	♦REC	65 - 12
LLL37	♦REC	65 - 21
LLL39-1	♦REC	67 - 54
LLL47	♦REC	66 - 62
LLL49-1	♦REC	53 - 12
LLL57	REC	58 - 49
LLL1052	REC	81 - 39
LM015	HITJ	222 - 10
LM016	HITJ	221 -106
LM016L	HITJ	222 - 1
LM020	HITJ	222 - 11
LM020L	HITJ	222 - 12
LM027	HITJ	222 - 15
LM038	HITJ	222 - 30
LM052L	HITJ	221 -105
LM054	HITJ	222 - 29
LM611DA	♦LEE	58 - 82
LM611DG	♦LEE	75 - 78
LM611DR	♦LEE	51 - 79
LM611DY	♦LEE	65 -109
LM24102	SRPJ	223 - 2
LM40101	SRPJ	222 - 97
LN23SCP(H)	MATJ	48 - 73
LN23SRP(H)	MATJ	44 - 60

TYPE No.	MFRS	Pg&Line
LN28RPH	MATJ	48 -104
LN28RPL	MATJ	48 -105
LN31GCP.HL	MATJ	76 - 49
LN33SCP(H)	MATJ	75 - 79
LN38GPL	MATJ	75 -106
LN43SCP(H)	MATJ	58 - 95
LN43SYP(H)	MATJ	58 - 96
LN48YCP	MATJ	59 - 39
LN48YPH	MATJ	59 - 35
LN48YPL	MATJ	58 - 83
LN49YCP	MATJ	59 - 36
LN51F	MATJ	86 - 20
LN51L	MATJ	86 - 21
LN52	♦MATJ	85 - 43
LN54	♦MATJ	84 - 82
LN55	MATJ	85 - 33
LN57	MATJ	85 - 5
LN58	MATJ	85 - 34
LN59	MATJ	84 - 45
LN62S	MATJ	85 - 35
LN64	MATJ	85 - 36
LN65	MATJ	86 - 6
LN66	MATJ	81 - 60
LN66L	♦MATJ	85 - 6
LN66NC	MATJ	85 - 7
LN68	MATJ	84 - 80
LN71	MATJ	83 - 1
LN88RCPP	MATJ	59 - 72
LN88RPP	MATJ	59 - 57
LN117WP23	MATJ	79 - 58
LN122CAL	MATJ	40 - 22
LN122D	MATJ	40 - 23
LN122DF	MATJ	40 - 10
LN122DL	MATJ	40 - 11
LN122F	MATJ	40 - 12
LN122L	MATJ	40 - 13
LN123DF	♦MATJ	40 - 14
LN124D	MATJ	40 - 15
LN125D	MATJ	40 - 25
LN126	MATJ	40 - 16
LN126D	MATJ	40 - 17
LN142WP38	MATJ	75 - 90
LN151F	MATJ	85 - 72
LN151L	MATJ	85 - 73
LN152	MATJ	85 -101
LN155	MATJ	84 -110
LN161	MATJ	85 - 23
LN162S	MATJ	84 - 23
LN166	MATJ	85 - 86
LN172	MATJ	86 - 31
LN175	MATJ	86 - 32
LN176	MATJ	86 - 12
LN181	♦MATJ	85 - 91
LN182	♦MATJ	85 - 12
LN191	♦MATJ	82 -110
LN193	♦MATJ	82 - 36
LN0202GP3	MATJ	89 - 99
LN0202RP2	MATJ	89 - 59
LN0202YP4	MATJ	89 - 74
LN0204GP3	MATJ	75 - 43
LN0204RP2	MATJ	40 - 30
LN0204YP4	MATJ	58 - 74
LN210RP	MATJ	42 - 77
LN210WP	MATJ	40 - 74
LN216RP	MATJ	44 - 55
LN219RP	MATJ	44 - 59
LN230RP	MATJ	41 - 91
LN230RPP	MATJ	43 - 46
LN233RP	MATJ	43 - 47
LN235RPH	MATJ	55 - 35
LN238RPH	MATJ	50 - 29
LN242RP	MATJ	42 - 69
LN242RPH	MATJ	40 - 99
LN245RP	MATJ	43 - 48
LN247RP	MATJ	45 - 11
LN248RPH	MATJ	44 - 56
LN250RPH	MATJ	42 - 70
LN251RCPP	MATJ	43 - 40
LN330GPP	MATJ	73 -106
LN342GP	MATJ	73 - 96
LN342GPH	MATJ	73 -107
LN344GP	MATJ	73 - 97
LN347GP	MATJ	76 - 8
LN348GPH	MATJ	72 - 82
LN349GPH	MATJ	72 - 83
LN350GPH	MATJ	74 - 83
LN351GCPP(G)	MATJ	72 - 84
LN0401RP2	MATJ	90 - 34
LN0401YP4	MATJ	90 - 49
LN416YP	MATJ	57 - 18
LN430YPP	MATJ	58 - 43
LN442YP	MATJ	58 - 38
LN442YPH	MATJ	58 - 44
LN444YP	MATJ	57 - 33
LN445YP	MATJ	58 - 45
LN447YP	MATJ	59 - 18
LN513GA	MATJ	179 - 11
LN513GK	MATJ	179 - 12
LN513GK-S	MATJ	179 - 13
LN513OA	MATJ	179 - 89
LN513OK	MATJ	179 - 90
LN513OK-S	MATJ	179 - 91
LN513RA	MATJ	178 - 62
LN513RK	MATJ	178 - 63
LN513RK-S	MATJ	178 - 64
LN513YA	MATJ	178 - 45
LN513YK	MATJ	178 - 46
LN513YK-S	MATJ	178 - 47
LN514GA	MATJ	185 - 30
LN514GK	MATJ	185 - 31
LN514OA	MATJ	185 - 91
LN514OK	MATJ	185 - 92
LN514RA	MATJ	184 -105
LN514RK	MATJ	184 -106

TYPE No.	MFRS	Pg&Line
LN514YA	MATJ	184 - 82
LN514YK	MATJ	184 - 83
LN516GA	MATJ	193 - 50
LN516GK	MATJ	193 - 51
LN516OA	MATJ	193 - 52
LN516OK	MATJ	193 - 53
LN516RA	MATJ	193 - 46
LN516RK	MATJ	193 - 47
LN516YA	MATJ	193 - 48
LN516YK	MATJ	193 - 49
LN524GA	MATJ	186 - 30
LN524GK	MATJ	186 - 31
LN524RA	MATJ	186 - 26
LN524RK	MATJ	186 - 27
LN524YA	MATJ	186 - 28
LN524YK	MATJ	186 - 29
LN526GA	MATJ	193 - 58
LN526GK	MATJ	193 - 59
LN526RA	MATJ	193 - 54
LN526RK	MATJ	193 - 55
LN526YA	MATJ	193 - 56
LN526YK	MATJ	193 - 57
LN543GA	MATJ	177 - 48
LN543GAH	MATJ	177 - 49
LN543GK	MATJ	177 - 50
LN543GKH	MATJ	177 - 51
LN543RA	MATJ	177 - 52
LN543RAH	MATJ	177 - 53
LN543RK	MATJ	177 - 54
LN543RKH	MATJ	177 - 55
LN543YA	MATJ	177 - 44
LN543YAH	MATJ	177 - 45
LN543YK	MATJ	177 - 46
LN543YKH	MATJ	177 - 47
LN0603GP3	MATJ	90 - 98
LN0603RP2	MATJ	90 - 92
LN0603RP8	MATJ	90 - 95
LN0603YP4	MATJ	90 - 96
LN0801WP23	MATJ	91 - 15
LN831RP	MATJ	59 - 3
LN01201C	MATJ	48 -106
LN01301C	MATJ	77 - 46
LN01401C	MATJ	59 - 24
LN01801C	MATJ	59 - 48
LN02202P	MATJ	91 - 22
LN02302P	MATJ	91 - 31
LN02402P	MATJ	91 - 27
LN03202P	MATJ	91 - 34
LN03302P	MATJ	91 - 43
LN03402P	MATJ	91 - 39
LN04202P	MATJ	91 - 50
LN04302P	MATJ	91 -100
LN04402P	MATJ	91 - 71
LN05103P	MATJ	92 - 24
LN05201P	MATJ	92 - 20
LN05202P	MATJ	92 - 25
LN05203P	MATJ	92 - 26
LN5240A	MATJ	186 - 39
LN5240K	MATJ	186 - 40
LN5260A	MATJ	186 - 41
LN5260K	MATJ	186 - 42
LN05301P	MATJ	92 - 74
LN05302P	MATJ	92 - 78
LN05401P	MATJ	92 - 42
LN05402P	MATJ	92 - 43
LN5430A	MATJ	177 - 57
LN5430A.H	MATJ	177 - 58
LN5430K	MATJ	177 - 59
LN5430K.H	MATJ	177 - 60
LN06202P	MATJ	92 - 83
LN06302P	MATJ	92 - 99
LN06402P	MATJ	92 - 90
LN07202P	MATJ	92 -105
LN07302P	MATJ	93 - 10
LN07402P	MATJ	93 - 1
LN10204P	MATJ	94 - 17
LPD80(A)	♦SIEG	121 - 32
LPD80A(A)	♦SIEX	121 - 31
LPS06B50	♦HITJ	103 - 43
LPS06B55	♦HITJ	103 - 44
LPT06B50	♦HITJ	103 - 45
LPT06B55	♦HITJ	103 - 46
LPT80(A)	♦SIEG	115 - 67
LPT80A(A)	♦SIEX	115 - 87
LPT100	♦SIEG	115 - 98
	♦SIEX	
LPT100A	♦SIEG	117 - 49
	♦SIEX	
LPT100B	♦SIEG	117 - 87
	♦SIEX	
LPT110	♦SIEG	115 - 99
	♦SIEX	
LPT110A	♦SIEG	116 - 97
	♦SIEX	
LPT110B	♦SIEG	117 - 8
	♦SIEX	
LPT500(A)	♦SIEG	120 - 13
	♦SIEX	
LS600	♦TII	117 - 10
LS3369EO	♦SIEX	56 - 61
LS3369FO	♦SIEX	56 -105
LS5421MO(A)	♦SIEX	59 - 73
LS5421PO(A)	♦SIEX	60 - 26
LS5421QO(A)	♦SIEX	60 - 52
LS5469EO	♦SIEX	56 - 62
LS5469FO	♦SIEX	56 -106
LST700	♦REC	78 -102
LST700L	♦REC	79 - 15
LST710	♦REC	78 -103
LST710L	♦REC	79 - 16
LST711	♦REC	79 - 17
LST711L	♦REC	79 - 44
LST712	♦REC	79 - 18
LST712L	♦REC	79 - 45

Δ-Registered with JEDEC by this manufacturer

♦-Mfr's data sheet available in microfilm service

1. TYPE No. CROSS INDEX

IN TYPE NUMBER SEQUENCE

TYPE No.	MFRS	Pg&Line
LST713	♦REC	79 - 19
LST713L	♦REC	79 - 46
LST722	♦REC	57 - 27
LST722L	♦REC	58 - 51
LST733	♦REC	63 - 71
LST733L	♦REC	65 - 57
LST743	♦REC	79 - 75
LST743L	♦REC	79 - 82
LST1052	♦REC	40 - 27
LST1056	♦REC	81 - 40
LST3300S	REC	59 - 96
LST4053	♦REC	78 -104
LST4053F	♦REC	41 - 4
LST4054-1	♦REC	46 - 88
LST4153	♦REC	58 - 71
LST4153F	♦REC	56 - 26
LST4153S	REC	58 - 72
LST4154	♦REC	58 - 97
LST4154S	REC	58 - 98
LST4253	♦REC	72 - 16
LST4253F	♦REC	69 - 78
LST4254	♦REC	72 -104
LST4353	♦REC	66 - 8
LST4353F	♦REC	61 - 79
LST4354	♦REC	66 - 48
LST4753	♦REC	79 - 52
LST4754	♦REC	51 - 95
LST5053	♦REC	43 -101
LST5053R5	REC	43 -102
LST5053R10	REC	43 -103
LST5053R	♦REC	47 - 8
LST5054-1	♦REC	47 - 9
LST5054-1R10	REC	46 - 39
LST5054-1R5	REC	46 - 40
LST5054R	♦REC	49 -106
LST5152	♦REC	59 - 93
LST5152R5	REC	59 - 94
LST5152R10	REC	58 - 84
LST5152R	♦REC	60 - 28
LST5152S	REC	59 - 97
LST5153	♦REC	58 - 85
LST5153R5	REC	58 - 86
LST5153R10	REC	58 - 87
LST5153R	♦REC	59 - 37
LST5153S	REC	58 - 99
LST5154	♦REC	58 - 88
LST5154R5	REC	58 - 89
LST5154R10	REC	58 - 90
LST5154R	♦REC	59 - 49
LST5154S	REC	58 -100
LST5252	♦REC	74 - 84
LST5252R5	REC	74 - 85
LST5252R10	REC	74 - 86
LST5252R	♦REC	77 - 69
LST5253	♦REC	71 - 97
LST5253R5	REC	71 - 98
LST5253R10	REC	71 - 99
LST5253R	♦REC	73 - 98
LST5254	♦REC	72 - 26
LST5254R5	REC	72 - 27
LST5254R10	REC	72 - 28
LST5254R	♦REC	75 - 80
LST5352	♦REC	67 - 80
LST5352R5	REC	67 - 81
LST5352R10	REC	67 - 82
LST5352R	♦REC	68 - 88
LST5353	♦REC	65 -110
LST5353R5	REC	66 - 1
LST5353R10	REC	66 - 2
LST5353R	♦REC	67 - 5
LST5354	♦REC	66 - 32
LST5354R5	REC	66 - 33
LST5354R10	REC	66 - 34
LST5354R	♦REC	67 - 83
LST5752	♦REC	53 - 93
LST5752R5	REC	53 - 94
LST5752R10	REC	53 - 95
LST5752R	♦REC	54 - 73
LST5753	♦REC	50 - 90
LST5753R5	REC	50 - 91
LST5753R10	REC	50 - 92
LST5753R	♦REC	52 - 82
LST5754	♦REC	51 - 80
LST5754R5	REC	51 - 81
LST5754R10	REC	51 - 82
LST5754R	♦REC	52 -100
LT506G	♦LTN	187 -110
LT612AG	LTN	195 - 94
LT687B24	♦LTN	195 - 95
LT698PG12	LTN	195 - 67
LT698PG24	LTN	195 - 68
LT699-12	LTN	195 - 96
LT699-24	LTN	195 - 97
LT707GDS	♦LTN	195 - 10
LT1810G	♦LTN	196 - 86
LT1810P	♦LTN	196 - 76
LT1811E	♦LTN	196 - 87
LT1820P	♦LTN	196 - 51
LT1825AP	LTN	196 - 77
LT3233G	♦LTN	72 - 7
LT3382	LTN	181 - 61
LT3400E	♦LTN	198 - 4
LT3406G	♦LTN	197 - 40
LT4272AT	♦LTN	58 - 1
LT5140	LTN	175 - 81
LT5377B	LTN	63 - 48
LTA1000E	♦LTN	93 - 94
LTA1000G	♦LTN	94 - 18
LTA1000HR	♦LTN	93 - 79
LTA1000P	♦LTN	93 - 69
LTA1000R	♦LTN	93 - 67
LTA1000Y	♦LTN	93 -106
LTA1300HS	♦FSC	207 - 75
LTA1300HW	♦FSC	207 - 76
LTA1300RS	♦FSC	207 - 77
LTA1300RW	♦FSC	207 - 78
LTA1300TS	♦FSC	207 - 79
LTA1300TW	♦FSC	207 - 80
LTA1300XS	♦FSC	207 - 81
LTA1300XW	♦FSC	207 - 82
LTA1310HW	♦FSC	205 -101
LTA1310RS	♦FSC	205 -102
LTA1310RW	♦FSC	205 -103
LTA1310TS	♦FSC	205 -104
LTA1310TW	♦FSC	205 -105
LTA8051G	♦LTN	92 - 65
LTA8051M	♦LTN	92 - 66
LTA8051P	♦LTN	92 - 6
LTA8101G	♦LTN	94 - 13
LTA8101M	♦LTN	94 - 14
LTA8101P	♦LTN	93 - 62
LTA8101W	♦LTN	93 - 63
LTA8102G	♦LTN	94 - 2
LTA8102P	♦LTN	93 - 54
LTA8106G	♦LTN	94 - 3
LTA8106P	♦LTN	93 - 55
LTA8108G	♦LTN	94 - 4
LTA8108P	♦LTN	93 - 56
LTB0022	♦LTN	175 - 29
LTB0028	♦LTN	175 - 30
LTB0038	♦LTN	175 - 31
LTB0047	♦LTN	175 - 40
LTB1020HS	♦FSC	210 - 40
LTB1020HW	♦FSC	210 - 41
LTB1020RS	♦FSC	210 - 42
LTB1020RW	♦FSC	210 - 43
LTB1020TS	♦FSC	210 - 44
LTB1020TW	♦FSC	210 - 45
LTB1020XS	♦FSC	210 - 46
LTB1020XW	♦FSC	210 - 47
LTB1030HS	♦FSC	212 -109
LTB1030HW	♦FSC	212 -110
LTB1030RS	♦FSC	213 - 1
LTB1030RW	♦FSC	213 - 2
LTB1030TS	♦FSC	213 - 3
LTB1030TW	♦FSC	213 - 4
LTB1030XS	♦FSC	213 - 5
LTB1030XW	♦FSC	213 - 6
LTB1041HS	♦FSC	213 - 7
LTB1041HW	♦FSC	213 - 8
LTB1041RS	♦FSC	213 - 9
LTB1041RW	♦FSC	213 - 10
LTB1041TS	♦FSC	213 - 11
LTB1041TW	♦FSC	213 - 12
LTB1041XS	♦FSC	213 - 13
LTB1041XW	♦FSC	213 - 14
LTB1042HS	♦FSC	213 - 15
LTB1042HW	♦FSC	213 - 16
LTB1042RS	♦FSC	213 - 17
LTB1042RW	♦FSC	213 - 18
LTB1042TS	♦FSC	213 - 19
LTB1042TW	♦FSC	213 - 20
LTB1042XS	♦FSC	213 - 21
LTB1042XW	♦FSC	213 - 22
LTB1080HS	♦FSC	211 - 35
LTB1080HW	♦FSC	211 - 36
LTB1080RS	♦FSC	211 - 37
LTB1080RW	♦FSC	211 - 38
LTB1080TS	♦FSC	211 - 39
LTB1080TW	♦FSC	211 - 40
LTB1080XS	♦FSC	211 - 41
LTB1080XW	♦FSC	211 - 42
LTB1091HS	♦FSC	211 - 43
LTB1091HW	♦FSC	211 - 44
LTB1091RS	♦FSC	211 - 45
LTB1091RW	♦FSC	211 - 46
LTB1091TS	♦FSC	211 - 47
LTB1091TW	♦FSC	211 - 48
LTB1091XS	♦FSC	211 - 49
LTB1091XW	♦FSC	211 - 50
LTB1092HS	♦FSC	211 - 51
LTB1092HW	♦FSC	211 - 52
LTB1092RS	♦FSC	211 - 53
LTB1092RW	♦FSC	211 - 54
LTB1092TS	♦FSC	211 - 55
LTB1092TW	♦FSC	211 - 56
LTB1092XS	♦FSC	211 - 57
LTB1092XW	♦FSC	211 - 58
LTB1181HS	♦FSC	209 - 47
LTB1181HW	♦FSC	209 - 48
LTB1181RS	♦FSC	209 - 49
LTB1181RW	♦FSC	209 - 50
LTB1181TS	♦FSC	209 - 51
LTB1181TW	♦FSC	209 - 52
LTB1181XS	♦FSC	209 - 53
LTB1181XW	♦FSC	209 - 54
LTB1182HS	♦FSC	209 - 55
LTB1182RS	♦FSC	209 - 56
LTB1182RW	♦FSC	209 - 57
LTB1182TS	♦FSC	209 - 58
LTB1182TW	♦FSC	209 - 59
LTB1182XS	♦FSC	209 - 60
LTB1182XW	♦FSC	209 - 61
LTB1190HS	♦FSC	209 - 62
LTB1190HW	♦FSC	209 - 63
LTB1190RS	♦FSC	209 - 64
LTB1190RW	♦FSC	209 - 65
LTB1190TS	♦FSC	209 - 66
LTB1190TW	♦FSC	209 - 67
LTB1190XS	♦FSC	209 - 68
LTB1190XW	♦FSC	209 - 69
LTB1466	♦LTN	175 - 43
LTB1478	♦LTN	175 - 45
LTB1488	♦LTN	175 - 46
LTB1498	♦LTN	175 - 51
LTC561E	♦LTN	193 - 33
LTC561G	♦LTN	193 - 34
LTC561HR	♦LTN	193 - 35
LTC561R	♦LTN	193 - 20
LTC561Y	♦LTN	193 - 30
LTC571E	♦LTN	193 - 36
LTC571G	♦LTN	193 - 37
LTC571HR	♦LTN	193 - 38
LTC571R	♦LTN	193 - 21
LTC571Y	♦LTN	193 - 31
LTC612A1P	♦LTN	195 - 33
LTC612B1P	♦LTN	194 - 99
LTC612D1P	♦LTN	195 - 34
LTC614A1P12	♦LTN	194 - 70
LTC617A1	♦LTN	194 -100
LTC617A1P	♦LTN	195 - 35
LTC617D1P	♦LTN	195 - 36
LTC624A1P12	♦LTN	194 - 71
LTC627A1P	♦LTN	195 - 37
LTC627D1P	♦LTN	195 - 38
LTC637A1	♦LTN	194 - 96
LTC637A1G	♦LTN	195 - 74
LTC637A1P	♦LTN	195 - 39
LTC637A1P12	♦LTN	195 - 40
LTC637C1G	♦LTN	195 - 75
LTC637C1P	♦LTN	195 - 41
LTC637C1P12	♦LTN	195 - 42
LTC637D1G	♦LTN	195 - 76
LTC637D1P12	♦LTN	195 - 43
LTC656T1	♦LTN	194 -101
LTC656T1G	♦LTN	194 -102
LTC656T1P	♦LTN	194 -103
LTC656TG	♦LTN	195 - 77
LTC656TP	♦LTN	195 - 44
LTC667A1	♦LTN	194 -104
LTC667A1G	♦LTN	195 - 78
LTC667A1P	♦LTN	195 - 45
LTC667A1P12	♦LTN	195 - 46
LTC667C1P	♦LTN	195 - 47
LTC667C1P12	♦LTN	195 - 48
LTC667D1G	♦LTN	195 - 79
LTC667D1P	♦LTN	195 - 49
LTC667D1P12	♦LTN	195 - 50
LTC672A1G	♦LTN	195 - 80
LTC672D1G	♦LTN	195 - 81
LTC672D1G12	♦LTN	195 - 82
LTC674A1G	♦LTN	195 - 83
LTC674B1G	♦LTN	194 -105
LTC674D1G	♦LTN	195 - 84
LTC674D1G12	♦LTN	195 - 85
LTC677A1	♦LTN	194 -106
LTC677A1P	♦LTN	195 - 51
LTC677D1P	♦LTN	195 - 52
LTC687A1P	♦LTN	195 - 53
LTC687S1P	♦LTN	195 - 54
LTC697A1	♦LTN	194 -107
LTC697A1G	♦LTN	195 - 86
LTC697A1P	♦LTN	195 - 55
LTC697A1P12	♦LTN	195 - 56
LTC697C1P	♦LTN	195 - 57
LTC697C1P12	♦LTN	195 - 58
LTC697D1G	♦LTN	195 - 87
LTC697D1P	♦LTN	195 - 59
LTC697D1P12	♦LTN	195 - 60
LTC737A1P	♦LTN	196 - 93
LTC737A1P24	♦LTN	196 - 99
LTC767A1P	♦LTN	196 -100
LTC797A1	♦LTN	196 - 94
LTC797A1P	♦LTN	196 - 95
LTC917A1P	♦LTN	198 - 13
LTC927A1P	♦LTN	198 - 14
LTC937A1P	♦LTN	198 - 15
LTC937S1P	♦LTN	198 - 16
LTC937S1P12	♦LTN	198 - 17
LTC955A1P	♦LTN	198 - 6
LTC975A1P	♦LTN	198 - 7
LTC997A1P	♦LTN	198 - 8
LTC1120HS	♦FSC	207 - 43
LTC1120HW	♦FSC	207 - 44
LTC1120RS	♦FSC	207 - 45
LTC1120RW	♦FSC	207 - 46
LTC1120TS	♦FSC	207 - 47
LTC1120TW	♦FSC	207 - 48
LTC1120XS	♦FSC	207 - 49
LTC1120XW	♦FSC	207 - 50
LTC1160HS	♦FSC	219 - 84
LTC1160HW	♦FSC	219 - 85
LTC1160RS	♦FSC	219 - 86
LTC1160RW	♦FSC	219 - 87
LTC1160TS	♦FSC	219 - 88
LTC1160TW	♦FSC	219 - 89
LTC1160XS	♦FSC	219 - 90
LTC1160XW	♦FSC	219 - 91
LTC1421HS	♦FSC	219 - 92
LTC1421HW	♦FSC	219 - 93
LTC1421RS	♦FSC	219 - 94
LTC1421RW	♦FSC	219 - 95
LTC1421TS	♦FSC	219 - 96
LTC1421TW	♦FSC	219 - 97
LTC1421XS	♦FSC	219 - 98
LTC1421XW	♦FSC	219 - 99
LTC1867T1P	♦LTN	199 - 7
LTC1867TA1P12		199 - 8
	♦LTN	
LTC2301E	♦LTN	176 - 44
LTC2301HR	♦LTN	176 - 45
LTC2301Y	♦LTN	176 - 40
LTC2602E	♦LTN	176 - 46
LTC2602G	♦LTN	176 - 47
LTC2602HR	♦LTN	176 - 48
LTC2602P	♦LTN	176 - 38
LTC2602R	♦LTN	176 - 30
LTC2602Y	♦LTN	176 - 41
LTC2702E	♦LTN	176 - 49
LTC2702G	♦LTN	176 - 50
LTC2702HR	♦LTN	176 - 51
LTC2702P	♦LTN	176 - 39
LTC2702R	♦LTN	176 - 31
LTC2702Y	♦LTN	176 - 42
LTC2801E	♦LTN	176 - 52
LTC2801HR	♦LTN	176 - 53
LTC2801Y	♦LTN	176 - 43
LTC3137A1-24	♦LTN	180 -106
LTC3137A1G24	♦LTN	181 - 28
LTC3137A1P12	♦LTN	181 - 14
LTC3137A1P24	♦LTN	181 - 19
LTC3167B1-24	♦LTN	180 -107
LTC3167B1G24	♦LTN	180 -108
LTC3169A1G12	♦LTN	180 -109
LTC3197A1-12	♦LTN	181 - 10
LTC3197A1P12	♦LTN	181 - 9
LTC3702SG	♦LTN	181 - 29
LTC3703SYA2	♦LTN	181 - 20
LTC3708SG	♦LTN	181 - 30
LTC3710E	♦LTN	181 - 57
LTC3710G	♦LTN	181 - 58
LTC3710HR	♦LTN	181 - 59
LTC3710P	♦LTN	181 - 48
LTC3710R	♦LTN	181 - 46
LTC3710Y	♦LTN	181 - 56
LTC3768A1G12	♦LTN	181 - 31
LTC3768A1P12	♦LTN	181 - 21
LTC3868A1P12	♦LTN	180 - 54
LTC3877	♦LTN	181 - 11
LTC3881	♦LTN	181 - 12
LTC3881G	♦LTN	181 - 32
LTC3881P	♦LTN	181 - 22
LTC3882	♦LTN	181 - 13
LTC3882G	♦LTN	181 - 33
LTC3882P	♦LTN	181 - 23
LTC4167A1	♦LTN	184 - 64
LTC5382	♦LTN	189 - 88
LTC5382A1G	♦LTN	190 - 12
LTC5382A1P	♦LTN	189 -106
LTC5382G	♦LTN	190 - 13
LTC5382P	♦LTN	189 -107
LTC5388	♦LTN	189 - 89
LTC5388A1G	♦LTN	190 - 14
LTC5388A1P	♦LTN	189 -108
LTC5388G	♦LTN	190 - 15
LTC5388P	♦LTN	189 -109
LTC5502A1P12	♦LTN	189 -110
LTC5703A1G	♦LTN	189 - 93
LTC5703A1P	♦LTN	189 - 90
LTC5703A3P	♦LTN	189 - 91
LTC5703G	♦LTN	189 - 94
LTC5703P	♦LTN	189 - 92
LTC5881	♦LTN	189 - 96
LTC5881A1G	♦LTN	190 - 16
LTC5881A1P	♦LTN	190 - 1
LTC5881A3P	♦LTN	190 - 2
LTC5881G	♦LTN	190 - 17
LTC5881P	♦LTN	190 - 3
LTC5882	♦LTN	189 - 97
LTC5882A1G	♦LTN	190 - 18
LTC5882A1P	♦LTN	190 - 4
LTC5882A3P	♦LTN	190 - 5
LTC5882G	♦LTN	190 - 19
LTC5882P	♦LTN	190 - 6
LTC6703A1P	♦LTN	195 - 61
LTC6703D1P	♦LTN	195 - 62
LTC14301A1P12		199 - 1
	♦LTN	
LTC14401A1-12		184 - 20
	♦LTN	
LTC15401A1G	♦LTN	190 - 20
LTC15401A1P	♦LTN	190 - 7
LTC15401G	♦LTN	190 - 21
LTC15401P	♦LTN	190 - 8
LTC18501A1P12		199 - 9
	♦LTN	
LTC18501A1P24		199 - 10
	♦LTN	
LTC115402A1P	♦LTN	199 - 2
LTC115402A1P12		199 - 3
	♦LTN	
LTD322G	♦LTN	180 - 80
LTD322P	♦LTN	180 - 65
LTD322R	♦LTN	180 - 66
LTD323G	♦LTN	180 - 81
LTD323P	♦LTN	180 - 67
LTD323R	♦LTN	180 - 68
LTD432PC	♦LTN	184 - 32
LTD432RC	♦LTN	184 - 23
LTD482PC	♦LTN	184 - 33
LTD482RC	♦LTN	184 - 24
LTD535E	♦LTN	189 - 35
LTD535G	♦LTN	189 - 36
LTD535HR	♦LTN	189 - 37
LTD535P	♦LTN	188 - 65
LTD535R	♦LTN	188 - 48
LTD535Y	♦LTN	189 - 14
LTD536AE	♦LTN	189 - 38
LTD536AG	♦LTN	189 - 39
LTD536AHR	♦LTN	189 - 40
LTD536AP	♦LTN	188 - 30
LTD536AR	♦LTN	188 - 49
LTD536AY	♦LTN	189 - 15
LTD585E	♦LTN	189 - 41
LTD585G	♦LTN	189 - 42
LTD585HR	♦LTN	189 - 43
LTD585P	♦LTN	188 - 66
LTD585R	♦LTN	188 - 50
LTD585Y	♦LTN	189 - 16
LTD586AE	♦LTN	189 - 44
LTD586AG	♦LTN	189 - 45
LTD586AHR	♦LTN	189 - 46
LTD586AP	♦LTN	188 - 31
LTD586AR	♦LTN	188 - 51
LTD586AY	♦LTN	189 - 17
LTD6410G	♦LTN	192 - 96
LTD6430G	♦LTN	191 - 68
LTD6440G	♦LTN	192 - 97
LTD6450G	♦LTN	191 - 69
LTD6610E	♦LTN	192 - 98
LTD6630E	♦LTN	191 - 70
LTD6640E	♦LTN	192 - 99
LTD6650E	♦LTN	191 - 71
LTD6710P	♦LTN	192 - 71
LTD6710R	♦LTN	192 - 67
LTD6730P	♦LTN	191 - 50
LTD6730R	♦LTN	191 - 46
LTD6740P	♦LTN	192 - 72
LTD6740R	♦LTN	192 - 68
LTD6750P	♦LTN	191 - 51
LTD6750R	♦LTN	191 - 47
LTD6810Y	♦LTN	192 - 90
LTD6830Y	♦LTN	191 - 65
LTD6840Y	♦LTN	192 - 91
LTD6850Y	♦LTN	191 - 66
LTD6910HR	♦LTN	193 - 11
LTD6930HR	♦LTN	191 - 85
LTD6940HR	♦LTN	192 -100
LTD6950HR	♦LTN	191 - 72
LTE209	♦LTN	81 - 41
LTE209C	♦LTN	81 - 42
LTE239	♦LTN	81 - 23
LTE239C	♦LTN	81 - 24
LTE301	♦LTN	81 - 43
LTE1071HS	♦FSC	216 - 21
LTE1071HW	♦FSC	216 - 22
LTE1071RS	♦FSC	216 - 23
LTE1071RW	♦FSC	216 - 24
LTE1071TS	♦FSC	216 - 25
LTE1071TW	♦FSC	216 - 26
LTE1071XS	♦FSC	216 - 27
LTE1071XW	♦FSC	216 - 28
LTE1072HS	♦FSC	216 - 29
LTE1072HW	♦FSC	216 - 30
LTE1072RS	♦FSC	216 - 31
LTE1072RW	♦FSC	216 - 32
LTE1072TS	♦FSC	216 - 33
LTE1072TW	♦FSC	216 - 34
LTE1072XS	♦FSC	216 - 35
LTE1072XW	♦FSC	216 - 36
LTE1110HS	♦FSC	216 - 37
LTE1110HW	♦FSC	216 - 38
LTE1110RS	♦FSC	216 - 39
LTE1110RW	♦FSC	216 - 40
LTE1110TS	♦FSC	216 - 41
LTE1110TW	♦FSC	216 - 42
LTE1110XS	♦FSC	213 - 23
LTE1110XW	♦FSC	216 - 43
LTE1361HS	♦FSC	213 - 89
LTE1361HW	♦FSC	213 - 90
LTE1361RS	♦FSC	213 - 91
LTE1361RW	♦FSC	213 - 92
LTE1361TS	♦FSC	213 - 93
LTE1361TW	♦FSC	213 - 94
LTE1361XS	♦FSC	213 - 95
LTE1361XW	♦FSC	213 - 96
LTE1460HS	♦FSC	213 - 97
LTE1460HW	♦FSC	213 - 98
LTE1460RS	♦FSC	213 - 99
LTE1460RW	♦FSC	213 -100
LTE1460TS	♦FSC	213 -101
LTE1460TW	♦FSC	213 -102
LTE1460XS	♦FSC	213 -103
LTE1460XW	♦FSC	213 -104
LTE4208	♦LTN	81 - 44
LTE4208C	♦LTN	81 - 45
LTE4238	♦LTN	81 - 25
LTE4238C	♦LTN	81 - 26
LTE5208	♦LTN	81 - 46
LTE5208C	♦LTN	81 - 47
LTE5238	♦LTN	81 - 27
LTE5238C	♦LTN	81 - 28
LTF804-08	♦LTN	181 - 63
LTF804-08P	♦LTN	181 - 64
LTF804-12	♦LTN	181 - 65
LTF804-12P	♦LTN	181 - 66
LTF1541HS	♦FSC	216 -104
LTF1541HW	♦FSC	216 -105
LTF1541RS	♦FSC	216 -106
LTF1541RW	♦FSC	216 -107
LTF1541TS	♦FSC	216 -108
LTF1541TW	♦FSC	216 -109
LTF1541XS	♦FSC	216 -110
LTF1541XW	♦FSC	217 - 1
LTF121402A1	♦LTN	176 - 6
LTF216141A1	♦LTN	176 - 7
LTF216141A1P	♦LTN	176 - 8
LTG312A	♦LTN	181 -106
LTG313A	♦LTN	181 -107
LTG314A	♦LTN	177 - 32
LTG315A	♦LTN	177 - 40
LTG320	♦LTN	182 - 85
LTG321	♦LTN	182 - 86
LTG324	♦LTN	188 - 67
LTG325	♦LTN	188 - 68
LTG326	♦LTN	186 - 93
LTG327	♦LTN	186 - 94
LTG352	♦LTN	187 - 46
LTG353	♦LTN	187 - 47
LTG370	♦LTN	199 - 29
LTG371	♦LTN	199 - 46
LTG1370HS	♦FSC	217 - 62
LTG1370HW	♦FSC	217 - 63
LTG1370RS	♦FSC	217 - 64
LTG1370RW	♦FSC	217 - 65
LTG1370TS	♦FSC	217 - 66
LTG1370TW	♦FSC	217 - 67
LTG1370XS	♦FSC	217 - 68
LTG1370XW	♦FSC	217 - 69
LTG1381HS	♦FSC	217 - 70

Δ-Registered with JEDEC by this manufacturer

♦-Mfr's data sheet available in microfilm service

1. TYPE No. CROSS INDEX

IN TYPE NUMBER SEQUENCE

TYPE No.	MFRS	Pg&Line
LTG1381HW	♦FSC	217 - 71
LTG1381RS	♦FSC	217 - 72
LTG1381RW	♦FSC	217 - 73
LTG1381TS	♦FSC	217 - 74
LTG1381TW	♦FSC	217 - 75
LTG1381XS	♦FSC	217 - 76
LTG1381XW	♦FSC	217 - 77
LTG2110	♦LTN	181 - 42
LTG2120	♦LTN	181 - 43
LTG4115	♦LTN	181 - 44
LTG4125	♦LTN	181 - 45
LTG8101	LTN	93 - 57
LTH301	♦LTN	155 - 22
LTJ811G	♦LTN	92 -101
LTJ811HR	♦LTN	92 - 88
LTJ811Y	♦LTN	92 - 94
LTL52RG	♦LTN	78 - 79
LTL201	♦LTN	48 - 92
LTL202	♦LTN	46 - 77
LTL203	♦LTN	41 - 83
LTL204	♦LTN	45 - 10
LTL205	♦LTN	48 - 93
LTL209	♦LTN	48 - 94
LTL211	♦LTN	49 - 88
LTL213	♦LTN	42 - 59
LTL219	♦LTN	43 - 18
LTL221	♦LTN	58 -106
LTL223	♦LTN	46 - 89
LTL224	♦LTN	47 - 61
LTL229	♦LTN	62 - 42
LTL231	♦LTN	75 - 18
LTL232	♦LTN	74 - 73
LTL233	♦LTN	72 - 65
LTL234	♦LTN	72 - 66
LTL239	♦LTN	56 - 76
LTL251	♦LTN	66 - 28
LTL252	♦LTN	65 - 28
LTL253	♦LTN	63 - 28
LTL254	♦LTN	63 - 29
LTL259	♦LTN	70 - 62
LTL283CK-H3	♦LTN	55 - 41
LTL283CK-L1	♦LTN	55 - 27
LTL283CK-L2	♦LTN	55 - 33
LTL291	♦LTN	58 -107
LTL293	♦LTN	57 - 6
LTL294	♦LTN	57 - 30
LTL299	♦LTN	56 - 77
LTL503-11	♦LTN	41 - 79
LTL503-14	♦LTN	91 - 47
LTL533-11	♦LTN	74 - 62
LTL533-14	♦LTN	91 -104
LTL553-11	♦LTN	63 - 80
LTL553-14	♦LTN	91 - 80
LTL603-1	♦LTN	41 - 73
LTL633-1	♦LTN	74 - 61
LTL653-1	♦LTN	63 - 79
LTL709E	♦LTN	56 - 78
LTL709EA	♦LTN	57 - 29
LTL709L	♦LTN	70 - 63
LTL709R	♦LTN	41 - 66
LTL709Y	♦LTN	63 - 76
LTL907EK	♦LTN	57 - 34
LTL907HK	♦LTN	79 - 97
LTL907JK	♦LTN	57 - 35
LTL907LK	♦LTN	73 - 3
LTL907NK	♦LTN	50 - 93
LTL907PK	♦LTN	47 - 10
LTL1202A	♦LTN	41 - 71
LTL1204A	♦LTN	40 - 48
LTL1212A	♦LTN	44 - 47
LTL1214A	♦LTN	40 - 49
LTL1222A	♦LTN	57 - 58
LTL1224A	♦LTN	55 - 94
LTL1232A	♦LTN	73 - 22
LTL1234A	♦LTN	70 - 5
LTL1252A	♦LTN	63 -108
LTL1254A	♦LTN	60 - 92
LTL1262A	♦LTN	51 - 87
LTL1274A	♦LTN	55 - 77
LTL1292A	♦LTN	57 - 59
LTL1294A	♦LTN	55 - 95
LTL2201A	♦LTN	40 - 57
LTL2203A	♦LTN	40 - 81
LTL2211A	♦LTN	40 - 92
LTL2213A	♦LTN	40 - 82
LTL2214RT	♦LTN	40 - 93
LTL2214WC	♦LTN	40 - 94
LTL2221A	♦LTN	55 - 96
LTL2223A	♦LTN	55 - 78
LTL2224RT	♦LTN	55 - 79
LTL2231A	♦LTN	70 - 6
LTL2233A	♦LTN	69 - 90
LTL2234WC	♦LTN	71 - 51
LTL2251A	♦LTN	69 - 91
LTL2253A	♦LTN	61 - 2
LTL2254WC	♦LTN	60 - 93
LTL2254YT	♦LTN	60 - 94
LTL2271A	♦LTN	55 - 80
LTL2291A	♦LTN	55 - 81
LTL2293A	♦LTN	55 - 82
LTL2294WC	♦LTN	55 - 97
LTL2300HR	♦LTN	89 - 63
LTL2350HR	♦LTN	90 - 36
LTL2400Y	♦LTN	89 - 83
LTL2450Y	♦LTN	90 - 60
LTL2500G	♦LTN	89 - 94
LTL2550G	♦LTN	90 - 75
LTL2600HR	♦LTN	90 - 33
LTL2620HR	♦LTN	90 - 99
LTL2655HR	♦LTN	90 - 37
LTL2685HR	♦LTN	90 -103
LTL2700Y	♦LTN	90 - 56
LTL2720Y	♦LTN	91 - 2
LTL2785Y	♦LTN	91 - 7
LTL2800G	♦LTN	90 - 70
LTL2820G	♦LTN	91 - 10
LTL2855G	♦LTN	90 - 76
LTL2885G	♦LTN	91 - 16
LTL3201A	♦LTN	40 - 64
LTL3211A	♦LTN	41 - 19
LTL3213A	♦LTN	41 - 20
LTL3215S	♦LTN	41 - 21
LTL3217A	♦LTN	41 - 74
LTL3218A	♦LTN	41 - 22
LTL3221A	♦LTN	55 - 99
LTL3223A	♦LTN	55 -100
LTL3225S	♦LTN	55 - 83
LTL3227A	♦LTN	58 - 59
LTL3231A	♦LTN	70 - 11
LTL3233A	♦LTN	70 - 12
LTL3235S	♦LTN	69 - 92
LTL3237A	♦LTN	70 - 70
LTL3238A	♦LTN	70 - 13
LTL3251A	♦LTN	61 - 8
LTL3253A	♦LTN	61 - 9
LTL3255S	♦LTN	60 - 95
LTL3257A	♦LTN	61 - 10
LTL3258A	♦LTN	61 - 67
LTL3262WC	♦LTN	52 - 47
LTL3271A	♦LTN	55 - 84
LTL3277A	♦LTN	55 -101
LTL3278A	♦LTN	55 -102
LTL3291A	♦LTN	55 -103
LTL3293A	♦LTN	55 -104
LTL3295S	♦LTN	55 - 85
LTL3297A	♦LTN	55 -105
LTL4201	♦LTN	41 - 82
LTL4202	♦LTN	47 - 59
LTL4203	♦LTN	41 - 84
LTL4204	♦LTN	49 - 89
LTL4206	♦LTN	47 - 60
LTL4211	♦LTN	43 - 29
LTL4213	♦LTN	46 - 90
LTL4221	♦LTN	56 - 82
LTL4222	♦LTN	58 - 61
LTL4223	♦LTN	57 - 97
LTL4224	♦LTN	59 - 62
LTL4231	♦LTN	73 - 88
LTL4232	♦LTN	76 - 20
LTL4233	♦LTN	75 - 53
LTL4234	♦LTN	77 - 40
LTL4251	♦LTN	63 - 81
LTL4252	♦LTN	66 - 58
LTL4253	♦LTN	65 - 30
LTL4254	♦LTN	67 - 69
LTL4261N	♦LTN	51 -106
LTL4262N	♦LTN	52 - 60
LTL4263	♦LTN	53 -103
LTL4264	♦LTN	54 - 98
LTL4264H3	♦LTN	55 - 24
LTL4264H4	♦LTN	55 - 29
LTL4264L1	♦LTN	55 - 5
LTL4264L2	♦LTN	55 - 16
LTL4266N	♦LTN	51 -107
LTL4268	♦LTN	54 - 99
LTL4268H3	♦LTN	55 - 25
LTL4268H4	♦LTN	55 - 30
LTL4268L1	♦LTN	55 - 6
LTL4268L2	♦LTN	55 - 17
LTL4291	♦LTN	57 - 3
LTL4292	♦LTN	58 -108
LTL4293	♦LTN	58 - 64
LTL4294	♦LTN	59 - 63
LTL4296	♦LTN	58 -109
LTL5103	♦LTN	41 - 85
LTL5113	♦LTN	43 - 35
LTL5114	♦LTN	50 - 18
LTL5123	♦LTN	57 - 98
LTL5124	♦LTN	59 - 9
LTL5133	♦LTN	73 - 89
LTL5134	♦LTN	76 - 59
LTL5153	♦LTN	64 - 51
LTL5154	♦LTN	67 - 4
LTL5163	♦LTN	53 - 42
LTL5173	♦LTN	64 - 52
LTL5174	♦LTN	65 - 90
LTL5193	♦LTN	57 - 99
LTL5194	♦LTN	59 - 10
LTL5203	♦LTN	41 - 6
LTL5209	♦LTN	40 - 91
LTL5219	♦LTN	41 - 67
LTL5223	♦LTN	56 -108
LTL5224	♦LTN	58 - 22
LTL5229	♦LTN	56 - 17
LTL5233	♦LTN	72 - 46
LTL5234	♦LTN	75 - 99
LTL5239	♦LTN	73 - 82
LTL5253	♦LTN	63 - 2
LTL5259	♦LTN	61 - 60
LTL5299	♦LTN	56 - 18
LTL6203L	♦LTN	45 - 58
LTL6203LN	♦LTN	40 - 50
LTL6213L	♦LTN	52 - 4
LTL6213LN	♦LTN	42 - 43
LTL6223L	♦LTN	59 - 30
LTL6223LN	♦LTN	56 - 80
LTL6233L	♦LTN	76 - 58
LTL6233LN	♦LTN	49 - 87
LTL6253L	♦LTN	66 -109
LTL6253LN	♦LTN	63 - 78
LTL6293L	♦LTN	59 - 31
LTL6293LN	♦LTN	56 - 81
LTL8212A	♦LTN	41 - 34
LTL8222A	♦LTN	56 - 7
LTL8232A	♦LTN	70 - 26
LTL8252A	♦LTN	61 - 29
LTL8292A	♦LTN	56 - 27
LTL9212A	♦LTN	41 - 29
LTL9213A	♦LTN	41 - 30
LTL9214A	♦LTN	41 - 31
LTL9222A	♦LTN	56 - 3
LTL9223A	♦LTN	56 - 23
LTL9224A	♦LTN	55 - 90
LTL9232A	♦LTN	70 - 23
LTL9233A	♦LTN	70 - 72
LTL9234A	♦LTN	70 - 24
LTL9252A	♦LTN	61 - 22
LTL9253A	♦LTN	61 - 23
LTL9254A	♦LTN	61 - 24
LTL9272A	♦LTN	60 - 99
LTL9273A	♦LTN	56 - 4
LTL9292A	♦LTN	56 - 5
LTL9293A	♦LTN	56 - 24
LTL9294A	♦LTN	58 - 12
LTL10203	♦LTN	41 - 86
LTL10203W	♦LTN	41 - 68
LTL10213	♦LTN	42 - 60
LTL10213W	♦LTN	58 - 27
LTL10223	♦LTN	58 - 24
LTL10223W	♦LTN	49 - 86
LTL10224	♦LTN	58 -110
LTL10233	♦LTN	74 - 63
LTL10233W	♦LTN	74 - 60
LTL10234	♦LTN	76 - 23
LTL10253	♦LTN	63 - 82
LTL10253W	♦LTN	63 - 77
LTL10254	♦LTN	66 - 90
LTL10263	♦LTN	53 -104
LTL10263W	♦LTN	53 - 49
LTL10264	♦LTN	54 - 90
LTL10268	♦LTN	54 - 91
LTL10293	♦LTN	59 - 11
LTL10293W	♦LTN	58 - 23
LTL10294	♦LTN	59 - 98
LTL13211AL	♦LTN	41 - 75
LTL13215A	♦LTN	41 - 23
LTL13218A	♦LTN	40 - 65
LTL13219A	♦LTN	45 - 63
LTL13219B	♦LTN	40 - 66
LTL13221AL	♦LTN	55 - 86
LTL13225A	♦LTN	55 - 87
LTL13231AL	♦LTN	70 - 14
LTL13235A	♦LTN	69 - 93
LTL13238A	♦LTN	70 - 71
LTL13239A	♦LTN	73 - 86
LTL13239B	♦LTN	69 - 70
LTL13251AL	♦LTN	61 - 11
LTL13255A	♦LTN	60 - 96
LTL13258A	♦LTN	60 - 97
LTL13259A	♦LTN	64 - 47
LTL13259B	♦LTN	60 - 79
LTL13278A	♦LTN	55 - 88
LTL13279A	♦LTN	57 - 94
LTL13279B	♦LTN	60 - 80
LTL13295A	♦LTN	55 - 89
LTL23201AL	♦LTN	40 - 51
LTL23203A	♦LTN	40 - 67
LTL23211AL	♦LTN	40 - 68
LTL23213A	♦LTN	41 - 24
LTL23214A	♦LTN	40 - 69
LTL23221AL	♦LTN	55 -106
LTL23223A	♦LTN	55 - 93
LTL23231AL	♦LTN	70 - 15
LTL23233A	♦LTN	70 - 16
LTL23234A	♦LTN	69 - 71
LTL23251AL	♦LTN	61 - 12
LTL23253A	♦LTN	61 - 13
LTL23254A	♦LTN	61 - 14
LTL23273A	♦LTN	60 - 98
LTL23274A	♦LTN	61 - 15
LTL23291AL	♦LTN	55 -107
LTL23293A	♦LTN	55 -108
LTL33221A	♦LTN	58 - 73
LTL33221AA	♦LTN	57 - 24
LTL33231A	♦LTN	75 - 16
LTL33231AA	♦LTN	72 - 99
LTL33251A	♦LTN	65 - 84
LTL33251AA	♦LTN	63 - 66
LTL53173Y	♦LTN	89 - 82
LTL54173G	♦LTN	89 - 93
LTL57173HR	♦LTN	89 - 64
LTM1416	♦LTN	175 -104
LTM2416	♦LTN	175 -105
LTM8328P	♦LTN	181 - 34
LTM8494AE	♦LTN	199 - 61
LTM8494AG	♦LTN	199 - 62
LTM8494AHR	♦LTN	199 - 63
LTM8494AP	♦LTN	199 - 58
LTM8494AR	♦LTN	199 - 52
LTM8522E	♦LTN	193 - 39
LTM8522G	♦LTN	193 - 40
LTM8522HR	♦LTN	193 - 41
LTM8522P	♦LTN	193 - 25
LTM8522R	♦LTN	193 - 22
LTM8522Y	♦LTN	193 - 32
LTM8529E	♦LTN	192 -101
LTM8529G	♦LTN	192 -102
LTM8529HR	♦LTN	192 -103
LTM8529P	♦LTN	192 - 73
LTM8529R	♦LTN	192 - 69
LTM8529Y	♦LTN	192 - 92
LTM8530E	♦LTN	192 -104
LTM8530G	♦LTN	192 -105
LTM8530HR	♦LTN	192 -106
LTM8530P	♦LTN	192 - 74
LTM8530R	♦LTN	192 - 70
LTM8530Y	♦LTN	192 - 93
LTP305G	♦LTN	200 - 44
LTP305HR	♦LTN	200 - 38
LTP305R	♦LTN	200 - 43
LTP537E	♦LTN	199 - 36
LTP537G	♦LTN	199 - 37
LTP537HR	♦LTN	199 - 38
LTP537P	♦LTN	199 - 32
LTP537R	♦LTN	199 - 30
LTP587E	♦LTN	199 - 39
LTP587G	♦LTN	199 - 40
LTP587HR	♦LTN	199 - 41
LTP587P	♦LTN	199 - 33
LTP587R	♦LTN	199 - 31
LTP747E	♦LTN	200 - 56
LTP747G	♦LTN	200 - 57
LTP747HR	♦LTN	200 - 58
LTP747PR	♦LTN	200 - 52
LTP747R	♦LTN	200 - 50
LTP747Y	♦LTN	200 - 54
LTP757E	♦LTN	200 - 59
LTP757G	♦LTN	200 - 60
LTP757HR	♦LTN	200 - 61
LTP757PR	♦LTN	200 - 53
LTP757R	♦LTN	200 - 51
LTP757Y	♦LTN	200 - 55
LTP1057AE	♦LTN	200 - 97
LTP1057AG	♦LTN	200 - 98
LTP1057AHR	♦LTN	200 - 99
LTP1057AR	♦LTN	200 - 86
LTP1057AY	♦LTN	200 - 87
LTP1057E	♦LTN	200 -109
LTP1057G	♦LTN	200 -110
LTP1057HR	♦LTN	201 - 1
LTP1057R	♦LTN	200 - 89
LTP1057Y	♦LTN	200 -107
LTP1157AE	♦LTN	200 -100
LTP1157AG	♦LTN	200 -101
LTP1157AHR	♦LTN	200 -102
LTP1157AY	♦LTN	200 - 88
LTP1157E	♦LTN	201 - 2
LTP1157G	♦LTN	201 - 3
LTP1157HR	♦LTN	201 - 4
LTP1157R	♦LTN	200 - 90
LTP1157Y	♦LTN	200 -108
LTP2057AE	♦LTN	201 - 21
LTP2057AG	♦LTN	201 - 25
LTP2057AHR	♦LTN	201 - 22
LTP2057AR	♦LTN	201 - 15
LTP2057AY	♦LTN	201 - 19
LTP2057E	♦LTN	201 - 29
LTP2057G	♦LTN	201 - 30
LTP2057HR	♦LTN	201 - 31
LTP2057R	♦LTN	201 - 17
LTP2057Y	♦LTN	201 - 27
LTP2058AE	♦LTN	201 - 39
LTP2058AG	♦LTN	201 - 40
LTP2058AHR	♦LTN	201 - 41
LTP2058AR	♦LTN	201 - 35
LTP2058AY	♦LTN	201 - 37
LTP2157AE	♦LTN	201 - 23
LTP2157AG	♦LTN	201 - 26
LTP2157AHR	♦LTN	201 - 24
LTP2157AR	♦LTN	201 - 16
LTP2157AY	♦LTN	201 - 20
LTP2157E	♦LTN	201 - 32
LTP2157G	♦LTN	201 - 33
LTP2157HR	♦LTN	201 - 34
LTP2157R	♦LTN	201 - 18
LTP2157Y	♦LTN	201 - 28
LTP2158AE	♦LTN	201 - 42
LTP2158AG	♦LTN	201 - 43
LTP2158AHR	♦LTN	201 - 44
LTP2158AR	♦LTN	201 - 36
LTP2158AY	♦LTN	201 - 38
LTP3784E	♦LTN	199 - 64
LTP3784G	♦LTN	199 - 65
LTP3784P	♦LTN	199 - 55
LTP3784R	♦LTN	199 - 53
LTP3785E	♦LTN	199 - 66
LTP3785G	♦LTN	199 - 67
LTP3785P	♦LTN	199 - 56
LTP3785R	♦LTN	199 - 54
LTR206	♦LTN	115 - 30
LTR206C	♦LTN	115 - 31
LTR209	♦LTN	115 - 32
LTR301	♦LTN	115 - 33
LTR306	♦LTN	193 - 61
LTR307	♦LTN	182 - 40
LTR308	♦LTN	193 - 62
LTR309	♦LTN	182 - 41
LTR312	♦LTN	181 -104
LTR313	♦LTN	181 -105
LTR314	♦LTN	177 - 38
LTR315	♦LTN	177 - 39
LTR320	♦LTN	182 - 81
LTR321	♦LTN	182 - 82
LTR322	♦LTN	180 - 61
LTR323	♦LTN	180 - 62
LTR324	♦LTN	188 - 52
LTR325	♦LTN	188 - 53
LTR326	♦LTN	186 - 89
LTR327	♦LTN	186 - 90
LTR352	♦LTN	187 - 40
LTR353	♦LTN	187 - 41
LTR370	♦LTN	199 - 34
LTR371	♦LTN	199 - 35
LTR516AB	♦LTN	103 - 64
LTR526AB	♦LTN	103 - 65
LTR536AB	♦LTN	103 - 66
LTR1341HS	♦FSC	204 - 92
LTR1341HW	♦FSC	204 - 93
LTR1341RS	♦FSC	204 - 94
LTR1341RW	♦FSC	204 - 95
LTR1341TS	♦FSC	204 - 96
LTR1341TW	♦FSC	204 - 97
LTR1341XS	♦FSC	204 - 98
LTR1341XW	♦FSC	204 - 99
LTR1401HS	♦FSC	222 - 2
LTR1401HW	♦FSC	222 - 3
LTR1401RS	♦FSC	222 - 4
LTR1401RW	♦FSC	222 - 5
LTR1401TS	♦FSC	222 - 6
LTR1401TW	♦FSC	222 - 7
LTR1401XS	♦FSC	222 - 8
LTR1401XW	♦FSC	222 - 9
LTR2110	♦LTN	181 - 35
LTR2120	♦LTN	181 - 36
LTR4115	♦LTN	181 - 37
LTR4125	♦LTN	181 - 38
LTR4208	♦LTN	115 - 34
LTR4224	♦LTN	193 -106
LTR8101	LTN	93 - 68
LTS306G	♦LTN	194 - 38
LTS306HR	♦LTN	194 - 39
LTS306P	♦LTN	194 - 29
LTS307G	♦LTN	194 - 40
LTS307HR	♦LTN	194 - 41
LTS307P	♦LTN	194 - 30
LTS308G	♦LTN	194 - 42
LTS308HR	♦LTN	194 - 43
LTS308P	♦LTN	194 - 31
LTS309G	♦LTN	194 - 44
LTS309HR	♦LTN	194 - 45
LTS309P	♦LTN	194 - 32
LTS311AE	♦LTN	179 - 51
LTS311AG	♦LTN	179 - 52
LTS311AHR	♦LTN	179 - 53
LTS311AP	♦LTN	178 - 65
LTS311AR	♦LTN	178 - 48
LTS311AY	♦LTN	179 - 35
LTS311E	♦LTN	180 - 40
LTS311G	♦LTN	180 - 15
LTS311HR	♦LTN	180 - 41
LTS311R	♦LTN	179 - 36
LTS311Y	♦LTN	180 - 2
LTS312AE	♦LTN	179 - 54
LTS312AG	♦LTN	179 - 55
LTS312AHR	♦LTN	179 - 56
LTS312AP	♦LTN	178 - 66
LTS312AR	♦LTN	178 - 49
LTS312AY	♦LTN	179 - 37
LTS312E	♦LTN	180 - 42
LTS312G	♦LTN	180 - 16
LTS312HR	♦LTN	180 - 43
LTS312R	♦LTN	179 - 38
LTS312Y	♦LTN	180 - 3
LTS313AE	♦LTN	178 - 8
LTS313AG	♦LTN	178 - 9
LTS313AHR	♦LTN	178 - 10
LTS313AP	♦LTN	177 - 80
LTS313AR	♦LTN	177 - 77
LTS313AY	♦LTN	177 -109
LTS313E	♦LTN	180 - 44
LTS313G	♦LTN	180 - 17
LTS313HR	♦LTN	180 - 45
LTS313R	♦LTN	179 - 39
LTS313Y	♦LTN	180 - 4
LTS314E	♦LTN	178 - 19
LTS314G	♦LTN	178 - 18
LTS314HR	♦LTN	178 - 20
LTS314R	♦LTN	177 -110
LTS314Y	♦LTN	178 - 16
LTS315AE	♦LTN	179 - 57
LTS315AG	♦LTN	179 - 58
LTS315AHR	♦LTN	179 - 59
LTS315AP	♦LTN	178 - 67
LTS315AR	♦LTN	178 - 50
LTS315AY	♦LTN	179 - 40
LTS315E	♦LTN	180 - 46
LTS315G	♦LTN	180 - 18
LTS315HR	♦LTN	180 - 47
LTS315R	♦LTN	179 - 41
LTS315Y	♦LTN	180 - 5
LTS316AE	♦LTN	179 - 60
LTS316AG	♦LTN	179 - 61
LTS316AHR	♦LTN	179 - 62
LTS316AP	♦LTN	178 - 68
LTS316AR	♦LTN	178 - 51
LTS316AY	♦LTN	179 - 42
LTS360E	♦LTN	182 - 29
LTS360G	♦LTN	182 - 30
LTS360HR	♦LTN	182 - 31
LTS360P	♦LTN	182 - 25
LTS360R	♦LTN	182 - 23
LTS367E	♦LTN	182 - 17
LTS367G	♦LTN	182 - 18
LTS367HR	♦LTN	182 - 19
LTS367P	♦LTN	182 - 14
LTS367R	♦LTN	182 - 13
LTS368E	♦LTN	182 - 32
LTS368G	♦LTN	182 - 33
LTS368HR	♦LTN	182 - 34
LTS368P	♦LTN	182 - 26
LTS368R	♦LTN	182 - 24
LTS542E	♦LTN	188 - 22
LTS542G	♦LTN	188 - 5
LTS542HR	♦LTN	188 - 23
LTS542R	♦LTN	187 - 91
LTS542Y	♦LTN	188 - 1
LTS543E	♦LTN	188 - 24
LTS543G	♦LTN	188 - 6
LTS543HR	♦LTN	188 - 25
LTS543R	♦LTN	187 - 92
LTS543Y	♦LTN	188 - 2
LTS544E	♦LTN	187 - 11
LTS544G	♦LTN	187 - 1
LTS544HR	♦LTN	187 - 12
LTS544R	♦LTN	186 -101
LTS544Y	♦LTN	186 -107
LTS545E	♦LTN	187 - 13
LTS545G	♦LTN	187 - 2
LTS545HR	♦LTN	187 - 14
LTS545R	♦LTN	186 -102

Δ-Registered with JEDEC by this manufacturer

♦-Mfr's data sheet available in microfilm service

1. TYPE No. CROSS INDEX

IN TYPE NUMBER SEQUENCE

TYPE No.	MFRS	Pg&Line
LTS545Y	♦LTN	186 -108
LTS546AE	♦LTN	190 - 83
LTS546AG	♦LTN	190 - 84
LTS546AHR	♦LTN	190 - 91
LTS546AP	♦LTN	190 - 75
LTS546AR	♦LTN	190 - 71
LTS546AY	♦LTN	190 - 79
LTS546E	♦LTN	188 - 26
LTS546G	♦LTN	188 - 7
LTS546HR	♦LTN	188 - 27
LTS546R	♦LTN	187 - 93
LTS546Y	♦LTN	188 - 3
LTS547AE	♦LTN	190 - 85
LTS547AG	♦LTN	190 - 86
LTS547AHR	♦LTN	190 - 92
LTS547AP	♦LTN	190 - 76
LTS547AR	♦LTN	190 - 72
LTS547AY	♦LTN	190 - 80
LTS547E	♦LTN	188 - 28
LTS547G	♦LTN	188 - 8
LTS547HR	♦LTN	188 - 29
LTS547R	♦LTN	187 - 94
LTS547Y	♦LTN	188 - 4
LTS548AE	♦LTN	190 - 65
LTS548AG	♦LTN	190 - 66
LTS548AHR	♦LTN	190 - 69
LTS548AP	♦LTN	190 - 61
LTS548AR	♦LTN	190 - 59
LTS548AY	♦LTN	190 - 63
LTS548E	♦LTN	187 - 15
LTS548G	♦LTN	187 - 3
LTS548HR	♦LTN	187 - 16
LTS548R	♦LTN	186 -103
LTS548Y	♦LTN	186 -109
LTS549AE	♦LTN	190 - 67
LTS549AG	♦LTN	190 - 68
LTS549AHR	♦LTN	190 - 70
LTS549AP	♦LTN	190 - 62
LTS549AR	♦LTN	190 - 60
LTS549AY	♦LTN	190 - 64
LTS549E	♦LTN	187 - 17
LTS549G	♦LTN	187 - 4
LTS549HR	♦LTN	187 - 18
LTS549R	♦LTN	186 -104
LTS549Y	♦LTN	186 -110
LTS1720E	♦LTN	198 - 81
LTS1720G	♦LTN	198 - 69
LTS1720P	♦LTN	198 - 61
LTS1720R	♦LTN	198 - 54
LTS1720Y	♦LTN	198 - 65
LTS1723E	♦LTN	198 - 82
LTS1723G	♦LTN	198 - 70
LTS1723P	♦LTN	198 - 62
LTS1723R	♦LTN	198 - 55
LTS1723Y	♦LTN	198 - 66
LTS1740E	♦LTN	198 - 83
LTS1740G	♦LTN	198 - 71
LTS1740P	♦LTN	198 - 63
LTS1740R	♦LTN	198 - 56
LTS1740Y	♦LTN	198 - 67
LTS1743E	♦LTN	198 - 84
LTS1743G	♦LTN	198 - 72
LTS1743P	♦LTN	198 - 64
LTS1743R	♦LTN	198 - 57
LTS1743Y	♦LTN	198 - 68
LTS3401AE	♦LTN	197 -110
LTS3401AG	♦LTN	198 - 2
LTS3401AP	♦LTN	197 - 84
LTS3401AR	♦LTN	197 - 71
LTS3401AY	♦LTN	197 - 96
LTS3401LE	♦LTN	197 - 77
LTS3401LG	♦LTN	197 - 78
LTS3401LP	♦LTN	197 - 50
LTS3401LR	♦LTN	197 - 46
LTS3401LY	♦LTN	197 - 65
LTS3403AE	♦LTN	198 - 1
LTS3403AG	♦LTN	198 - 3
LTS3403AP	♦LTN	197 - 85
LTS3403AR	♦LTN	197 - 72
LTS3403AY	♦LTN	197 - 97
LTS3403LE	♦LTN	197 - 79
LTS3403LG	♦LTN	197 - 80
LTS3403LP	♦LTN	197 - 51
LTS3403LR	♦LTN	197 - 47
LTS3403LY	♦LTN	197 - 66
LTS3406AE	♦LTN	197 - 41
LTS3406AG	♦LTN	197 - 42
LTS3406AP	♦LTN	197 - 35
LTS3406AR	♦LTN	197 - 31
LTS3406AY	♦LTN	197 - 39
LTS3406LE	♦LTN	197 - 32
LTS3406LG	♦LTN	197 - 33
LTS3406LP	♦LTN	197 - 26
LTS3406LR	♦LTN	197 - 25
LTS3406LY	♦LTN	197 - 30
LTS3731E	♦LTN	185 - 67
LTS3733E	♦LTN	185 - 68
LTS3736E	♦LTN	185 - 69
LTS4505AG	♦LTN	183 - 88
LTS4505G	♦LTN	184 - 3
LTS4510AG	♦LTN	183 - 89
LTS4510G	♦LTN	184 - 4
LTS4530AG	♦LTN	183 - 11
LTS4530G	♦LTN	183 - 16
LTS4540AG	♦LTN	183 - 90
LTS4540G	♦LTN	184 - 5
LTS4580AG	♦LTN	183 - 91
LTS4580G	♦LTN	183 - 17
LTS4605AE	♦LTN	183 - 92
LTS4605E	♦LTN	184 - 6
LTS4610AE	♦LTN	183 - 93
LTS4610E	♦LTN	184 - 7
LTS4630AE	♦LTN	183 - 12
LTS4630E	♦LTN	183 - 18
LTS4640AE	♦LTN	183 - 94
LTS4640E	♦LTN	184 - 8
LTS4680AE	♦LTN	183 - 95
LTS4680E	♦LTN	183 - 19
LTS4705AP	♦LTN	183 - 38
LTS4705AR	♦LTN	183 - 28
LTS4705R	♦LTN	183 - 54
LTS4710AP	♦LTN	183 - 39
LTS4710AR	♦LTN	183 - 29
LTS4710R	♦LTN	183 - 55
LTS4730AP	♦LTN	182 -102
LTS4730AR	♦LTN	182 - 98
LTS4730R	♦LTN	182 -108
LTS4740AP	♦LTN	183 - 40
LTS4740AR	♦LTN	183 - 30
LTS4740R	♦LTN	183 - 56
LTS4780AP	♦LTN	183 - 41
LTS4780AR	♦LTN	183 - 31
LTS4780R	♦LTN	182 -109
LTS4805AY	♦LTN	183 - 82
LTS4805Y	♦LTN	183 -110
LTS4810AY	♦LTN	183 - 83
LTS4810Y	♦LTN	184 - 1
LTS4830AY	♦LTN	183 - 10
LTS4830Y	♦LTN	183 - 14
LTS4840AY	♦LTN	183 - 84
LTS4840Y	♦LTN	184 - 2
LTS4880AY	♦LTN	183 - 85
LTS4880Y	♦LTN	183 - 15
LTS4905AHR	♦LTN	183 - 96
LTS4905HR	♦LTN	184 - 9
LTS4910AHR	♦LTN	183 - 97
LTS4910HR	♦LTN	184 - 10
LTS4930AHR	♦LTN	183 - 13
LTS4930HR	♦LTN	183 - 20
LTS4940AHR	♦LTN	183 - 98
LTS4940HR	♦LTN	184 - 11
LTS4980AHR	♦LTN	183 - 99
LTS4980HR	♦LTN	183 - 21
LTS5301P	♦LTN	191 -108
LTS5301R	♦LTN	191 - 96
LTS5303P	♦LTN	191 -109
LTS5303R	♦LTN	191 - 97
LTS5307P	♦LTN	191 - 55
LTS5307R	♦LTN	191 - 48
LTS5308P	♦LTN	191 -110
LTS5308R	♦LTN	191 - 49
LTS5311E	♦LTN	190 - 87
LTS5311G	♦LTN	190 - 88
LTS5311HR	♦LTN	190 - 93
LTS5311P	♦LTN	190 - 77
LTS5311R	♦LTN	190 - 73
LTS5311Y	♦LTN	190 - 81
LTS5501E	♦LTN	192 - 31
LTS5503E	♦LTN	192 - 32
LTS5507E	♦LTN	191 - 75
LTS5508E	♦LTN	192 - 33
LTS5701Y	♦LTN	192 - 18
LTS5703Y	♦LTN	192 - 19
LTS5707Y	♦LTN	191 - 67
LTS5708Y	♦LTN	192 - 20
LTS5801G	♦LTN	192 - 34
LTS5803G	♦LTN	192 - 35
LTS5807G	♦LTN	192 - 36
LTS5808G	♦LTN	192 - 37
LTS5811E	♦LTN	190 - 89
LTS5811G	♦LTN	190 - 90
LTS5811HR	♦LTN	190 - 94
LTS5811P	♦LTN	190 - 78
LTS5811R	♦LTN	190 - 74
LTS5811Y	♦LTN	190 - 82
LTS6460G	♦LTN	192 - 21
LTS6475G	♦LTN	192 - 22
LTS6480G	♦LTN	192 - 23
LTS6495G	♦LTN	192 - 24
LTS6660E	♦LTN	192 - 25
LTS6675E	♦LTN	192 - 26
LTS6680E	♦LTN	192 - 27
LTS6695E	♦LTN	192 - 28
LTS6760P	♦LTN	191 -101
LTS6760R	♦LTN	192 - 3
LTS6775P	♦LTN	191 -102
LTS6775R	♦LTN	191 - 98
LTS6780P	♦LTN	191 -103
LTS6780R	♦LTN	191 - 99
LTS6795P	♦LTN	191 -104
LTS6795R	♦LTN	191 -100
LTS6860Y	♦LTN	192 - 14
LTS6875Y	♦LTN	192 - 15
LTS6880Y	♦LTN	192 - 16
LTS6895Y	♦LTN	192 - 17
LTS6960HR	♦LTN	192 - 38
LTS6975HR	♦LTN	192 - 39
LTS6980HR	♦LTN	192 - 40
LTS6995HR	♦LTN	192 - 41
LTS7651HR	♦LTN	185 - 70
LTS7653HR	♦LTN	185 - 71
LTS7656HR	♦LTN	185 - 72
LTS7661Y	♦LTN	186 - 5
LTS7661YN	♦LTN	185 - 64
LTS7663Y	♦LTN	186 - 6
LTS7663YN	♦LTN	185 - 65
LTS7666Y	♦LTN	186 - 7
LTS7666YN	♦LTN	185 - 66
LTS7671G	♦LTN	186 - 20
LTS7671GN	♦LTN	185 - 73
LTS7673G	♦LTN	186 - 21
LTS7673GN	♦LTN	185 - 74
LTS7676G	♦LTN	186 - 22
LTS7676GN	♦LTN	185 - 75
LTS7751P	♦LTN	184 -107
LTS7751R	♦LTN	184 - 87
LTS7756P	♦LTN	184 -108
LTS7756R	♦LTN	184 - 88
LTS7760P	♦LTN	184 -109
LTS7760R	♦LTN	184 - 89
LY3369EO	♦SIEX	62 - 29
LY3369FO	♦SIEX	62 -102
LY5421MO(A)	♦SIEX	68 - 1
LY5421PO(A)	♦SIEX	68 - 82
LY5421QO(A)	♦SIEX	68 -107
LY5469EO	♦SIEX	62 - 32
LY5469FO	♦SIEX	62 -106
LY5480	SIEG	67 - 99
LYU260	SIEG	62 - 34
LYZ181CO	♦SIEX	62 - 24
M26X256	DECO	229 - 68
M128	DECO	229 - 86
M1400	♦DECO	225 -106
M2400	DECO	225 -107
M5613-11	♦REC	193 - 23
M5623-11	♦REC	193 - 28
M5633-11	♦REC	193 - 26
M5643-11	♦REC	193 - 42
M5643R11	♦REC	193 - 43
M5735-5	♦CRS	218 - 10
M5735-6	♦CRS	218 - 11
M5735G	♦CRS	218 - 12
M5735M	CRS	218 - 13
M5735X	CRS	218 - 14
M5740-5	♦CRS	218 - 15
M5740-6	♦CRS	218 - 16
M5740G	♦CRS	218 - 17
M5740M	CRS	218 - 18
M5740X	CRS	218 - 19
M5745-5	♦CRS	218 - 20
M5745-6	♦CRS	218 - 21
M5745G	♦CRS	218 - 22
M5745M	CRS	218 - 23
M5745X	CRS	218 - 24
M6400A	DECO	226 - 81
MA41(2)	♦MER	233 - 35
MAL100	♦MEHK	115 - 88
MAN1A	♦GIC	176 - 87
MAN2A	♦GIC	200 - 45
MAN10A	♦GIC	176 - 88
MAN51A	♦LTN	178 - 27
MAN52A	♦LTN	178 - 28
MAN53A	♦LTN	177 - 62
MAN54A	♦LTN	178 - 29
MAN71A	♦GIC	178 - 30
	♦LTN	
MAN72A	♦GIC	178 - 31
	♦LTN	
MAN73A	♦GIC	177 - 63
	♦LTN	
MAN74A	♦GIC	178 - 32
	♦LTN	
MAN78A	♦GIC	177 - 75
MAN81A	♦LTN	178 - 75
MAN82A	♦LTN	178 - 76
MAN83A	♦LTN	177 - 64
MAN84A	♦LTN	178 - 77
MAN101A	♦GIC	176 - 89
MAN1001A	♦GIC	176 - 90
MAN2815	♦GIC	199 - 19
MAN3410A	♦GIC	179 - 16
MAN3420A	♦GIC	179 - 17
MAN3430A	♦GIC	177 -100
MAN3440A	♦GIC	179 - 18
MAN3480A	♦GIC	177 -101
MAN3610A	♦GIC	179 - 19
	♦LTN	
MAN3620A	♦GIC	179 - 20
	♦LTN	
MAN3630A	♦GIC	177 - 65
	♦LTN	
MAN3640A	♦GIC	179 - 21
	♦LTN	
MAN3680A	♦GIC	177 -102
MAN3810A	♦GIC	178 - 78
MAN3820A	♦GIC	178 - 79
MAN3830A	♦GIC	177 - 89
MAN3840A	♦GIC	178 - 80
MAN3880A	♦GIC	177 - 90
MAN3910A	♦GIC	178 - 81
MAN3920A	♦GIC	178 - 82
MAN3930A	♦GIC	177 - 34
MAN3940A	♦GIC	178 - 83
MAN3980A	♦GIC	177 - 91
MAN4505	♦GIC	182 -104
	♦LTN	
MAN4505A	♦GIC	182 -105
MAN4510	♦GIC	183 - 45
	♦LTN	
MAN4510A	♦GIC	183 - 46
MAN4540	♦GIC	183 - 47
	♦LTN	
MAN4540A	♦GIC	183 - 48
MAN4580A	♦GIC	182 -106
MAN4605	♦GIC	183 - 2
	♦LTN	
MAN4605A	♦GIC	183 - 3
MAN4610	♦GIC	183 - 71
	♦LTN	
MAN4610A	♦GIC	183 - 72
MAN4630	♦GIC	183 - 4
	♦LTN	
MAN4630A	♦GIC	183 - 5
MAN4640	♦GIC	183 - 73
	♦LTN	
MAN4640A	♦GIC	183 - 74
MAN4680A	♦GIC	183 - 6
MAN4705	♦GIC	182 - 99
	♦LTN	
MAN4705A	♦GIC	182 -100
MAN4710	♦GIC	183 - 32
	♦LTN	
MAN4710A	♦GIC	183 - 33
MAN4740	♦GIC	183 - 34
	♦LTN	
MAN4740A	♦GIC	183 - 35
MAN4780A	♦GIC	182 -101
MAN4805	♦GIC	183 - 7
	♦LTN	
MAN4805A	♦GIC	183 - 8
MAN4810	♦GIC	183 - 75
	♦LTN	
MAN4810A	♦GIC	183 - 76
MAN4840	♦GIC	183 - 77
	♦LTN	
MAN4840A	♦GIC	183 - 78
MAN4880A	♦GIC	183 - 9
MAN4905A	♦GIC	183 - 49
MAN4910A	♦GIC	183 - 50
MAN4940A	♦GIC	183 - 51
MAN4980A	♦GIC	182 -107
MAN6410	♦GIC	188 -107
	♦TFS	
MAN6430	♦GIC	186 - 97
	♦TFS	
MAN6440	♦TFS	192 - 77
MAN6450	♦TFS	191 - 54
MAN6460	♦TFS	191 -107
MAN6480	♦GIC	187 - 65
	♦TFS	
MAN6510	♦FSC	192 - 78
MAN6530	♦FSC	191 - 61
MAN6540	♦FSC	192 - 79
MAN6550	♦FSC	191 - 62
MAN6560	♦FSC	192 - 10
MAN6580	♦FSC	192 - 11
MAN6610(A)	♦FSC	192 - 88
♦GIC	♦TFS	
MAN6630	♦FSC	191 - 63
♦GIC	♦TFS	
MAN6640(A)	♦FSC	192 - 89
♦GIC	♦TFS	
MAN6650	♦FSC	191 - 64
♦GIC	♦TFS	
MAN6660	♦FSC	192 - 12
♦GIC	♦TFS	
MAN6680	♦FSC	192 - 13
♦GIC	♦TFS	
MAN6710	♦FSC	192 - 63
♦GIC	♦TFS	
MAN6730	♦FSC	191 - 42
♦GIC	♦TFS	
MAN6740	♦FSC	192 - 64
♦GIC	♦TFS	
MAN6750	♦FSC	191 - 43
♦GIC	♦TFS	
MAN6760	♦FSC	191 - 92
♦GIC	♦TFS	
MAN6780	♦FSC	191 - 93
♦GIC	♦TFS	
MAN6810(A)	♦GIC	188 -101
	♦TFS	
MAN6830(A)	♦GIC	186 - 95
	♦TFS	
MAN6840(A)	♦GIC	188 -102
	♦TFS	
MAN6850(A)	♦GIC	186 - 96
	♦TFS	
MAN6860(A)	♦GIC	187 - 63
	♦TFS	
MAN6880(A)	♦GIC	187 - 64
	♦TFS	
MAN6910	♦GIC	192 - 80
	♦TFS	
MAN6930	♦FSC	191 - 39
♦GIC	♦TFS	
MAN6940	♦GIC	192 - 60
	♦TFS	
MAN6950	♦FSC	191 - 40
♦GIC	♦TFS	
MAN6960	♦FSC	191 - 89
♦GIC	♦TFS	
MAN6980	♦FSC	191 - 90
♦GIC	♦TFS	
MAN8610	♦GIC	197 - 81
MAN8630	♦GIC	197 - 34
MAN8640	♦GIC	197 - 82
MAN8650	♦GIC	197 - 83
MAN8810(A)	♦GIC	197 - 60
MAN8830(A)	♦GIC	197 - 61
MAN8840(A)	♦GIC	197 - 62
MAN8850(A)	♦GIC	197 - 63
MAN8910	♦GIC	197 - 43
MAN8930	♦GIC	197 - 24
MAN8940	♦GIC	197 - 44
MAN8950	♦GIC	197 - 45
MB1101	SOL	136 - 29
MB1151	SOL	136 - 30
MB7020160(A)	♦APX	206 - 19
	♦PHIN	
MB7030160	♦APX	222 - 20
MB7030320	♦APX	220 - 99
MBC2014CF	♦SOL	109 - 35
MBC3026CF	♦SOL	109 - 36
MC32(2)	♦MER	111 - 46
MCA7	♦GIC	160 - 15
MCA8	♦GIC	157 - 58
MCA11G1	♦GIC	169 - 47
MCA11G2	♦GIC	169 - 48
MCA81	♦GIC	155 - 62
MCA230	♦GESY	169 - 14
♦GIC	♦MOTA	
MULB	OTK	
PHIN	RTCF	
	VALG	
MCA231	♦GESY	169 - 21
♦GIC	♦MOTA	
MULB	OTK	
PHIN	RTCF	
	VALG	
MCA255	♦GESY	169 - 15
♦GIC	♦MOTA	
MULB	OTK	
PHIN	RTCF	
	VALG	
MCC670	GIC	169 - 53
MCC671	GIC	169 - 52
MCD329	♦SOL	161 - 60
MCD521H	♦SOL	161 - 61
MCD521L	♦SOL	161 - 46
MCD522H	SOL	161 - 62
MCD522L	SOL	161 - 47
MCD526	♦SOL	163 - 39
MCD527	♦SOL	163 - 33
MCD537	♦SOL	163 - 44
MCD718H	♦SOL	163 - 46
MCD718L	♦SOL	163 - 45
MCD725	♦SOL	163 - 36
MCD725E	♦SOL	163 - 42
MCD735	♦SOL	161 - 15
MCD7212F	♦SOL	163 - 43
MCD7212P	♦SOL	163 - 34
MCL702A	SOL	161 - 8
MCL703C	♦SOL	161 - 9
MCL716A	SOL	161 - 11
MCL723C	♦SOL	161 - 7
MCL2601	♦GIC	173 - 33
MCN701A	SOL	161 - 12
MCN721A	♦SOL	161 - 10
MCP3009	♦GIC	233 - 36
MCP3010	♦GIC	233 - 37
MCP3011	♦GIC	233 - 38
MCP3020	♦GIC	233 - 39
MCP3021	♦GIC	233 - 40
MCP3022	♦GIC	233 - 41
MCS2	♦GESY	171 - 5
♦GIC	MOTA	
	OTK	
MCS21	GESY	171 - 36
♦GIC	OTK	
MCS2400	♦GESY	171 - 9
♦GIC	MOTA	
	OTK	
MCS2401	GESY	171 - 37
♦GIC	OTK	
MCT2	♦GESY	166 - 52
♦GIC	♦MOTA	
♦NECE	NECJ	
OTK	♦PHIN	
	♦TII	
MCT2E	♦GESY	166 - 15
♦GIC	♦MOTA	
OTK	♦TII	
MCT4	♦GIC	164 - 64
MCT4R	♦GIC	164 - 65
MCT6	♦GIC	165 - 24
MCT8	♦GIC	151 - 90
MCT26	♦GESY	166 - 49
♦GIC	♦MOTA	
OTK	♦PHIN	
MCT66	♦GIC	165 - 21
MCT81	♦GIC	151 - 37
MCT210	♦FSC	166 - 29
♦GESY	♦GIC	
	OTK	
MCT270	♦GIC	166 - 7
MCT271	♦GIC	166 - 9
	♦MOTA	
MCT272	♦GIC	166 - 11
	♦MOTA	
MCT273	♦GIC	166 - 12
	♦MOTA	
MCT274	♦GIC	166 - 13
	♦MOTA	
MCT275	♦GIC	166 - 10
	♦MOTA	
MCT276	♦GIC	166 - 8
MCT277	♦GIC	165 - 26
	♦MOTA	
MCT2200	♦GIC	164 - 39
MCT2201	♦GIC	164 - 41
MCT2202	♦GIC	164 - 40
MD4H50	REC	225 - 21
MD4N50	REC	225 - 20
MD25-0	♦CENB	128 - 56
MD25-1	♦CENB	128 - 57
MD25-2	♦CENB	128 - 58
MD25-3	♦CENB	128 - 59
MD25-4	♦CENB	128 - 60
MD25-5	♦CENB	128 - 61
MD33(1)	♦MER	108 -103
MD100-0	♦CENB	128 - 76
MD100-1	♦CENB	128 - 77
MD100-2	♦CENB	128 - 78
MD100-3	♦CENB	128 - 79
MD100-4	♦CENB	128 - 80
MD100-5	♦CENB	128 - 81
MD144-5	CENB	128 - 91
MD430(1)	REC	225 - 26
MD430DP	REC	225 - 6
MD430PM	REC	225 - 11
MD440(1)	REC	225 - 27
MD440DP	REC	225 - 7
MD440PM	REC	225 - 12
MD450(1)	REC	225 - 28
MD450DP	REC	225 - 8
MD450PM	REC	225 - 13
MD630(2)	♦REC	225 - 71
MD630DP	REC	225 - 9

Δ-Registered with JEDEC by this manufacturer

♦-Mfr's data sheet available in microfilm service

1. TYPE No. CROSS INDEX

IN TYPE NUMBER SEQUENCE

TYPE No.	MFRS	Pg&Line
MD630PM	REC	225 - 14
MD640	♦REC	225 - 72
MD640DP	REC	225 - 10
MD640EW	REC	225 - 50
MD640LR	REC	225 - 51
MD640NS	REC	225 - 52
MD640PM	REC	225 - 15
MD640XY	REC	225 - 53
MD650	♦REC	225 - 73
MD650DP	REC	225 - 54
MD650EW	REC	225 - 55
MD650LR	REC	225 - 56
MD650NS	REC	225 - 57
MD650PM	REC	225 - 16
MD650XY	REC	225 - 58
MD747	MDC	196 - 57
MDA431	♦MER	124 - 82
MDA431SMA	♦MER	124 - 54
MDA435	♦MER	124 - 83
MDA435SMA	♦MER	124 - 55
MDA438	♦MER	124 - 84
MDA438SMA	♦MER	124 - 56
MDA7705	♦MER	124 - 15
MDA7705SMA	♦MER	124 - 16
MDA7708	♦MER	124 - 17
MDA7708SMA	♦MER	124 - 18
MDD43	♦REC	225 - 29
MDD44	♦REC	225 - 30
MDD45	♦REC	225 - 31
MDD63	♦REC	225 - 42
MDD64	♦REC	225 - 43
MDD65	♦REC	225 - 44
MDD450	REC	225 - 22
MDD640	REC	225 - 45
MDD650	REC	225 - 46
MDL258	♦MER	231 - 94
MDL259	♦MER	231 - 95
MDL271-4	♦MER	231 - 96
MDL275-4	♦MER	231 - 97
MDL275TV	♦MER	231 - 98
MDL276TV	♦MER	231 - 99
MDL277TV	♦MER	231 -100
MDL278-4	♦MER	231 -101
MDL278TV	♦MER	231 -102
MDL285TV	♦MER	231 -103
MDL286TV	♦MER	231 -104
MDL288TV	♦MER	231 -105
MDL481	♦MER	231 -106
MDL485	♦MER	231 -107
MDL488	♦MER	231 -108
MDL621-50	♦MER	231 -109
MDL621-100	♦MER	231 -110
MDL622-50	♦MER	232 - 1
MDL622-150	♦MER	232 - 2
MDL622-300	♦MER	232 - 3
MDL623-200	♦MER	232 - 4
MDL623-500	♦MER	232 - 5
MDL821-50	♦MER	232 - 6
MDL821-100	♦MER	232 - 7
MDL823-200	♦MER	232 - 8
MDL2416(A)	♦SIEG	201 - 91
	♦SIEX	
MDL2416B(A)	♦SIEG	201 - 92
MDL2416C	♦SIEG	201 - 93
	♦SIEX	
MDL2755TV	♦MER	232 - 9
MDL2765TV	♦MER	232 - 10
MDL2775TV	♦MER	232 - 11
MDL2785TV	♦MER	232 - 12
MDL4595	♦MER	232 - 13
MDL4866	♦MER	232 - 14
MDL4877	♦MER	232 - 15
MDL4995	♦MER	232 - 16
MDL27502	♦MER	232 - 17
MDL27802	♦MER	232 - 18
ME1013	♦MITA	83 - 71
	MITJ	
ME1303	♦MITA	83 - 70
	MITJ	
ME1504	♦MITA	82 - 88
ME1514	♦MITA	82 - 89
ME7021(2)	♦MITA	83 - 21
ME7022(2)	♦MITA	83 - 32
ME7121	♦GIC	85 - 1
ME7124	♦GIC	85 - 2
ME7161	♦GIC	83 - 20
ME7521	♦MITA	83 - 22
ME7522	♦MITA	83 - 23
ME7922	♦MITA	83 - 24
MEL11	♦MEHK	121 - 34
MEL12	♦MEHK	121 - 64
MEL31	♦MEHK	115 - 53
MEL32	♦MEHK	115 - 57
MEL100	MEHK	115 - 89
MFOD71	♦MOTA	103 - 41
MFOD72	♦MOTA	115 - 35
MFOD73	♦MOTA	121 - 13
MFOD75	♦MOTA	125 - 73
MFOD100	♦MOTA	111 - 43
MFOD200	♦MOTA	118 - 64
MFOD300	♦MOTA	121 - 14
MFOD1100	♦MOTA	103 - 91
MFOD2202	♦MOTA	120 - 29
MFOD2302	♦MOTA	122 - 37
MFOD2404	♦MOTA	232 - 19
MFOD2405	♦MOTA	232 - 20
MFOD3100	♦MOTA	103 - 90
MFOD3510	♦MOTA	125 - 74
MFOE71	♦MOTA	81 - 99
MFOE200	♦MOTA	85 - 10
MFOE1100	♦MOTA	84 - 90
MFOE1101	♦MOTA	85 - 56
MFOE1102	♦MOTA	85 - 89
MFOE1200	♦MOTA	83 - 31

TYPE No.	MFRS	Pg&Line
MFOE1201	♦MOTA	84 - 24
MFOE1202	♦MOTA	84 - 77
MFOE3100	♦MOTA	83 - 27
MFOE3101	♦MOTA	84 - 36
MFOE3102	♦MOTA	83 - 40
MFOE3200	♦MOTA	83 - 69
MFOE3201	♦MOTA	84 - 44
MFPT100	♦MEHK	115 - 92
MFPT100A	♦MEHK	117 - 17
MFPT100B	♦MEHK	117 - 84
MG21D	MEHK	71 - 7
MG31C	MEHK	71 -100
MG31D	MEHK	71 -101
MG31T	MEHK	71 -102
MG31W	MEHK	71 -103
MG32D	MEHK	72 -101
MG51C	MEHK	72 - 11
MG51D	MEHK	72 - 12
MG51T	MEHK	72 - 13
MG51W	MEHK	72 - 14
MG52C	MEHK	76 - 50
MG52D	MEHK	74 -110
MG52T	MEHK	76 - 86
MG52W	MEHK	75 - 94
MG61D	MEHK	70 -107
MG62D	MEHK	69 -108
MG71D	MEHK	71 - 9
MG81D	MEHK	71 - 14
MG131A	MEHK	178 - 69
MG131AF	MEHK	177 - 81
MG131C	MEHK	177 - 82
MG131CF	MEHK	177 - 83
MG132A	MEHK	179 - 63
MG132C	MEHK	179 - 64
MG133A	MEHK	179 - 65
MG133C	MEHK	179 - 66
MG134A	MEHK	179 - 67
MG134C	MEHK	179 - 68
MG141A	MEHK	183 -100
MG141C	MEHK	184 -110
MG143A	MEHK	183 -101
MG143C	MEHK	185 - 1
MG151A	MEHK	187 - 95
MG151C	MEHK	187 - 48
MG241A	MEHK	184 - 47
MG241C	MEHK	184 - 48
MG251A	MEHK	189 - 51
MG251C	MEHK	189 - 52
MG7712(2)	♦MER	233 - 42
MG7020160	♦MULB	206 - 20
♦PHIN	♦RTCF	
	♦VALG	
MGB51C	MEHK	72 - 17
MGB51D	MEHK	72 - 18
MGB51T	MEHK	72 - 15
MGB51W	MEHK	72 - 19
MGB52C	MEHK	76 - 42
MGB52D	MEHK	72 - 20
MGB52T	MEHK	76 - 79
MGB52W	MEHK	75 - 81
MGB61D	MEHK	71 - 69
MGB71D	MEHK	71 - 63
MGB81D	MEHK	71 - 70
MGC31D	MEHK	74 - 87
MH60	♦LAD	97 - 61
MH63	♦LAD	97 - 82
MH65	♦LAD	97 - 84
MH67(2)	♦LAD	98 - 5
MH163	LAD	98 - 23
MH166	LAD	98 - 28
MH167	LAD	98 - 36
MH214	♦LAD	98 - 31
MI11H	♦SOL	103 - 48
MI11HL	♦SOL	103 - 49
MI31T	MEHK	82 - 75
MI33H	♦SOL	103 - 76
MI33HF	♦SOL	107 - 19
MI33HL	♦SOL	103 - 77
MI33HLF	♦SOL	107 - 20
MI33R	♦SOL	107 - 21
MI33RF	♦SOL	107 - 22
MI51T	MEHK	82 - 76
MI9500/519-01		44 - 1
	♦HPA	
MI9500/519-02		44 - 2
	♦HPA	
MI9500/521-01		70 - 45
	♦HPA	
MI9500/521-02		70 - 46
	♦HPA	
MIC33T	♦MEHK	82 - 77
MIC33TSA	♦MEHK	84 - 54
MIC33TSB	♦MEHK	84 - 5
MIC33TSC	♦MEHK	83 - 26
MIC33TSD	♦MEHK	82 - 32
MIC33TSE	♦MEHK	81 - 90
MID241	♦MEHK	184 - 34
MII62005-1	♦MPI	83 - 72
MII62005-2	♦MPI	85 - 49
MII62006-1(A)		83 - 73
	♦MPI	
MII62006-2(A)		86 - 10
	♦MPI	
MII62016-1(A)		83 - 74
	♦MPI	
MII62016-2(A)		85 - 50
	♦MPI	
MII62017-1(A)		83 - 75
	♦MPI	
MII62017-2(A)		85 - 51
	♦MPI	
MII66003-001	♦MPI	164 - 53
MII66003-002	♦MPI	164 - 54
MII66003-003	♦MPI	164 - 55

TYPE No.	MFRS	Pg&Line
MII66004-001	♦MPI	168 - 22
MII66004-002	♦MPI	170 - 1
MII66005-001	♦MPI	168 - 21
MII66005-002	♦MPI	169 -110
MII66008-100	♦MPI	173 -102
MII66008-101	♦MPI	173 -103
MII66022(A)	♦MPI	164 - 63
MII66022-2	♦MPI	165 - 27
MII66022-3	♦MPI	165 - 28
MII66022-4	♦MPI	165 - 29
MII66026	♦MPI	165 - 25
MII66033-101	♦MPI	171 - 15
MII66033-102	♦MPI	171 - 16
MII66039-2	♦MPI	165 - 30
MII66039-3	♦MPI	165 - 31
MII66039-4	♦MPI	165 - 32
MII68000(A)	♦MPI	115 - 64
MII68001(A)	♦MPI	115 - 75
MII68002(A)	♦MPI	116 - 18
MII68003(A)	♦MPI	115 - 69
MII68004(A)	♦MPI	121 - 60
MII68500(A)	♦MPI	83 - 53
MII68502(A)	♦MPI	83 - 54
MII68520(A)	♦MPI	83 - 44
MII68521(A)	♦MPI	83 - 45
MII68550(A)	♦MPI	81 - 83
MK9150-1	♦GIC	60 - 24
MK9150-2	♦GIC	60 - 51
MK9350-1	♦GIC	68 - 79
MK9350-2	♦GIC	68 -106
MKB1-7H26P	SOL	131 - 19
MKB1-7H28P	SOL	131 - 23
MKB2-12H49	SOL	132 - 97
MKB4H38	♦SOL	131 -108
MKB5H38	♦SOL	131 -109
MKB5H69	♦SOL	134 - 61
MKB7H28P	♦SOL	135 - 83
MKB7H38	♦SOL	131 -110
MKB7H69	♦SOL	134 - 62
MKB76C60P	♦SOL	136 - 8
MKY1-4H37	♦SOL	132 - 1
MKY1-4H48	♦SOL	132 -103
MKY1-5C38E	♦SOL	132 - 46
MKY1-5H26	♦SOL	131 - 22
MKY1-5H37	♦SOL	132 - 2
MKY1-5H38	♦SOL	132 - 3
MKY1-5H48	♦SOL	132 -104
MKY1-5H49	♦SOL	132 -105
MKY1-7C38E	♦SOL	132 - 47
MKY1-7H26	♦SOL	131 - 24
MKY1-7H37	SOL	132 - 4
MKY1-7H38	♦SOL	132 - 5
MKY1-7H39	♦SOL	132 - 6
MKY1-7H48	SOL	132 -106
MKY1-7H49	♦SOL	132 -107
MKY4H37	♦SOL	131 -105
MKY4H48	♦SOL	132 - 98
MKY5C38E	♦SOL	131 - 49
MKY5C46	♦SOL	132 - 94
MKY5H26	♦SOL	131 - 18
MKY5H38	♦SOL	131 -106
MKY5H49	♦SOL	132 - 99
MKY7C38E	♦SOL	131 - 50
MKY7H26	♦SOL	131 - 20
MKY7H38	♦SOL	131 -107
MKY7H49	♦SOL	132 -100
MKY54C46	♦SOL	132 - 95
MKY54C348	♦SOL	131 - 51
MKY76C348	♦SOL	131 - 52
ML25	♦MER	231 - 54
ML25P	♦MER	231 - 55
ML25P-SF3	♦MER	231 - 56
ML25P-TS	MER	231 - 57
ML25PS	♦MER	231 - 58
ML33	♦MER	231 - 59
ML37	♦MER	231 - 60
ML2205	♦MITJ	96 - 8
ML2701	♦MITA	97 - 37
	♦MITJ	
ML2901	♦MITA	97 - 38
ML3001	MITJ	96 - 7
ML3101	♦MITA	97 - 14
	♦MITJ	
ML3401	♦MITA	97 - 15
	♦MITJ	
ML4014	♦MITA	97 - 2
ML4101	♦MITJ	96 - 4
ML4102	♦MITA	97 - 3
	MITJ	
ML4102A	♦MITA	96 - 76
	♦MITJ	
ML4107	♦MITA	97 - 4
ML4401	♦MITJ	96 - 5
ML4402(3)	♦MITA	97 - 5
	MITJ	
ML4402A	♦MITA	96 - 62
	♦MITJ	
ML4403	♦MITA	97 - 6
ML4404	♦MITA	97 - 7
ML4405(2)	♦MITA	97 - 1
ML4406(2)	♦MITA	97 - 8
ML4407(2)	♦MITA	97 - 9
ML4412	♦MITA	97 - 10
ML4412A	♦MITA	96 - 63
ML4422	♦MITA	97 - 11
ML4432	♦MITA	97 - 12
ML4718	♦MITA	97 - 13
ML5101	MITJ	97 - 39
ML5101A	♦MITA	87 - 20
	MITJ	
ML5308	♦MITJ	96 - 9
ML5401	MITJ	97 - 40
ML5401A	♦MITA	87 - 21
	MITJ	

TYPE No.	MFRS	Pg&Line
ML6101A	♦MITA	87 - 81
ML6411A	♦MITA	87 - 82
ML6701A	♦MITA	87 - 83
ML6702A	♦MITA	88 - 49
ML7601	♦MITJ	96 - 97
ML7611	♦MITA	96 - 98
ML7611A	♦MITA	97 - 55
ML7701	♦MITA	96 - 99
	♦MITJ	
ML7701A	♦MITA	97 - 56
ML7901	♦MITA	96 -100
ML7901A	♦MITA	97 - 57
ML8611	♦MITA	97 - 30
ML8701	♦MITA	97 - 31
ML9611	♦MITA	97 - 32
ML9701	♦MITA	97 - 33
MLA12	♦MEHK	94 - 36
MLED15	♦MOTA	84 - 1
MLED71	♦MOTA	84 - 81
MLED77	♦MOTA	84 - 40
MLED910	♦MOTA	81 - 91
MLED930	♦MOTA	82 - 18
MLH5G	MEHK	92 - 68
MLH5S	MEHK	92 - 27
MLH5Y	MEHK	92 - 49
MLH10G	MEHK	94 - 15
MLH10S	MEHK	93 - 74
MLH10Y	MEHK	93 -104
MLI8G	MEHK	93 - 24
MLI8S	MEHK	93 - 14
MLI8Y	MEHK	93 - 20
MLI80G	♦MEHK	175 -100
MLI80S	♦MEHK	175 - 99
MLI80Y	♦MEHK	175 -101
MLT458	♦MER	231 - 61
MLT478	♦MER	231 - 62
MLT488	♦MER	231 - 63
MM53	♦SOL	107 - 36
MM53C	♦SOL	107 - 37
MM2010	♦SOL	107 - 38
MMH62M	♦GIC	175 - 4
MMH62W	♦GIC	175 - 5
MMH75M	♦GIC	175 - 7
MMH78M	♦GIC	175 - 8
MMN36240(A)	♦GIC	181 - 52
MMN36420(A)	♦GIC	180 - 82
MMN36440(A)	♦GIC	181 - 53
MMN38220(A)	♦GIC	180 - 83
MMN38240(A)	♦GIC	181 - 54
MMN38420(A)	♦GIC	180 - 84
MMN38440(A)	♦GIC	181 - 55
MMN39220(A)	♦GIC	180 - 74
MMN39240(A)	♦GIC	181 - 49
MMN39420(A)	♦GIC	180 - 75
MMN39440(A)	♦GIC	181 - 50
MMN56120	♦GIC	188 - 37
MMN56240	♦GIC	189 - 98
MMN56320	♦GIC	188 - 32
MMN56440	♦GIC	187 - 19
MMN58120	♦GIC	188 - 33
MMN58240	♦GIC	189 - 99
MMN58320	♦GIC	188 - 34
MMN58440	♦GIC	189 -100
MMN59120	♦GIC	188 - 35
MMN59240	♦GIC	189 -101
MMN59320	♦GIC	188 - 36
MMN59440	♦GIC	189 -102
MN512K	MATJ	128 - 99
MN864A	MATJ	129 - 2
MN8027	MATJ	232 - 57
MO21D	MEHK	57 - 22
MO31C	MEHK	56 - 89
MO31CR	MEHK	52 -101
MO31D	MEHK	56 - 90
MO31DR	MEHK	52 - 83
MO31W	MEHK	56 - 91
MO32D	MEHK	59 - 27
MO32DR	MEHK	52 - 54
MO51C	MEHK	56 - 92
MO51D	MEHK	56 - 93
MO51DR	MEHK	52 - 33
MO51T	MEHK	56 - 94
MO51W	MEHK	56 - 95
MO52C	MEHK	59 - 50
MO52CR	MEHK	59 - 51
MO52D	MEHK	58 -101
MO52DR	MEHK	58 -102
MO52T	MEHK	59 - 58
MO52W	MEHK	58 -103
MO61D	MEHK	57 - 19
MO61DR	MEHK	47 - 11
MO62D	MEHK	57 - 23
MO62DR	MEHK	47 - 74
MO71D	MEHK	57 - 20
MO71DR	MEHK	47 - 25
MO81D	MEHK	57 - 28
MO81DR	MEHK	47 - 48
MO134A	♦MEHK	179 - 69
MO134C	♦MEHK	179 - 70
MOB51C	MEHK	56 - 96
MOB51CR	MEHK	53 - 43
MOB51D	MEHK	56 -100
MOB51DR	MEHK	53 - 10
MOB51T	MEHK	56 - 97
MOB51W	MEHK	56 - 98
MOB52C	MEHK	59 - 66
MOB52D	MEHK	56 -101
MOB52T	MEHK	59 - 69
MOB52W	MEHK	59 - 38
MOB61D	MEHK	57 - 37
MOB61DR	MEHK	47 - 75
MOB71D	MEHK	57 - 36
MOB71DR	MEHK	47 - 73
MOB81D	MEHK	57 - 41

TYPE No.	MFRS	Pg&Line
MOB81DR	MEHK	47 - 76
MOC31D	MEHK	59 - 25
MOC31DR	MEHK	52 - 48
MOC70K1	♦MOTA	156 - 41
MOC70K2	♦MOTA	156 -110
MOC70K3	♦MOTA	157 - 68
MOC70T1	♦MOTA	156 - 42
MOC70T2	♦MOTA	157 - 1
MOC70T3	♦MOTA	157 - 69
MOC70U1	♦MOTA	156 - 43
MOC70U2	♦MOTA	157 - 2
MOC70U3	♦MOTA	157 - 70
MOC70W1	♦MOTA	151 - 38
MOC70W2	♦MOTA	151 - 91
MOC71T1	♦MOTA	157 - 82
MOC71T3	♦MOTA	157 -110
MOC71U1	♦MOTA	157 - 83
MOC71U3	♦MOTA	158 - 1
MOC71W1	♦MOTA	157 - 84
MOC74T1	♦MOTA	150 - 25
MOC74U1	♦MOTA	150 - 26
MOC119	♦MOTA	169 - 83
MOC601A	♦MOTA	167 - 71
MOC602A	♦MOTA	167 - 72
MOC603A	♦MOTA	167 - 73
MOC604A	♦MOTA	167 - 74
MOC622A	♦MOTA	169 - 90
MOC623A	♦MOTA	169 - 93
MOC624A	♦MOTA	169 - 95
MOC625A	♦MOTA	169 - 98
MOC626A	♦MOTA	169 - 91
MOC627A	♦MOTA	169 - 94
MOC628A	♦MOTA	169 - 96
MOC629A	♦MOTA	169 -101
MOC633A	♦MOTA	171 -108
MOC634A	♦MOTA	171 -109
MOC635A	♦MOTA	171 -110
MOC640A	♦MOTA	172 - 1
MOC641A	♦MOTA	172 - 2
MOC1005	♦MOTA	167 - 91
MOC1006	♦MOTA	167 - 92
MOC3000	♦MOTA	171 - 48
MOC3001	♦MOTA	171 - 49
MOC3002	♦MOTA	171 - 40
MOC3003	♦MOTA	171 - 41
MOC3007	♦MOTA	171 - 42
MOC3009	GESY	171 -101
	♦MOTA	
MOC3010	GESY	171 -102
	♦MOTA	
MOC3011	♦MOTA	171 -103
MOC3012	GESY	171 -104
	♦MOTA	
MOC3020	♦MOTA	172 - 3
MOC3021	GESY	172 - 4
	♦MOTA	
MOC3022	♦MOTA	172 - 5
MOC3023	GESY	172 - 6
	♦MOTA	
MOC3030	♦MOTA	171 -105
MOC3031	♦MOTA	171 -106
MOC3032	♦MOTA	171 -107
MOC3040	♦MOTA	172 - 7
MOC3041	♦MOTA	172 - 8
MOC3060	♦MOTA	172 - 10
MOC3061	♦MOTA	172 - 11
MOC3062	♦MOTA	172 - 12
MOC3063	♦MOTA	172 - 13
MOC5007	♦MOTA	173 - 64
MOC5008	♦MOTA	173 - 65
MOC5009	♦MOTA	173 - 66
MOC7811	♦MOTA	158 - 54
MOC7812	♦MOTA	158 - 56
MOC7813	♦MOTA	158 - 58
MOC7821	♦MOTA	158 - 55
MOC7822	♦MOTA	158 - 57
MOC7823	♦MOTA	158 - 59
MOC8020	♦MOTA	169 - 97
MOC8021	♦MOTA	169 - 92
MOC8030	♦MOTA	169 - 84
MOC8050	♦MOTA	169 - 85
MOC8080	♦MOTA	169 - 89
MOC8100	♦MOTA	167 - 80
MOC8111	♦MOTA	167 - 83
MOC8112	♦MOTA	167 - 88
MOC8113	♦MOTA	167 - 89
MOC8204	♦MOTA	167 - 79
MOC8205	♦MOTA	167 - 76
MOC8206	♦MOTA	167 - 75
MP22C	♦SOL	107 - 6
MP44H	♦SOL	107 - 14
MP55	♦SOL	107 - 23
MPB2-4H48	♦SOL	133 - 1
MPB2-4H59	♦SOL	133 - 86
MPB2-5H49	♦SOL	133 - 2
MPB2-5H59	♦SOL	133 - 87
MPB2-7C39	♦SOL	132 - 7
MPB2-7C49	♦SOL	132 -108
MPB2-7H39	♦SOL	132 - 8
MPB2-7H49	♦SOL	132 -109
MPB2-12C49	♦SOL	135 -102
MPB2-12H49	♦SOL	132 -110
MPB2-43C49	♦SOL	132 - 96
MPB2-76C49	♦SOL	132 -101
MPB2-76C59F	♦SOL	135 -107
MPB2-76C59P	♦SOL	135 -108
MPC33TS	♦MEHK	117 - 62
MPC33TSA	♦MEHK	117 - 63
MPC1001	SOL	136 - 37
MPC1051	SOL	136 - 38
MPC1052	SOL	136 - 35
MPC1053	SOL	136 - 36
MPC1054	SOL	136 - 34

Δ-Registered with JEDEC by this manufacturer

♦-Mfr's data sheet available in microfilm service

1. TYPE No. CROSS INDEX

IN TYPE NUMBER SEQUENCE

TYPE No.	MFRS	Pg&Line
MPD2545(A)	♦SIEG	202 - 97
	♦SIEX	
MPD2547(A)	♦SIEG	202 - 98
	♦SIEX	
MPY4H69	♦SOL	134 - 58
MPY4H79	♦SOL	134 -102
MPY5C69	♦SOL	134 - 59
MPY5C79	♦SOL	134 -103
MPY5C89	♦SOL	135 - 36
MPY5H69	♦SOL	134 - 60
MPY5H79	♦SOL	134 -104
MPY5H89	♦SOL	135 - 37
MPY7C59	♦SOL	133 - 84
MPY7C59E	♦SOL	134 - 53
MPY7C69	♦SOL	134 - 54
MPY7C79	♦SOL	134 -100
MPY7H59	♦SOL	133 - 85
MPY7H69	♦SOL	134 - 55
MPY7H79	♦SOL	134 -101
MPY7H79P	♦SOL	136 - 15
MPY12C28	♦SOL	131 - 25
MPY12C38	♦SOL	135 - 92
MPY12C38P	♦SOL	135 - 91
MPY12C39	♦SOL	132 - 9
MPY12C49	♦SOL	133 - 3
MPY12C49E	♦SOL	133 - 51
MPY12H28	♦SOL	131 - 26
MPY12H39	♦SOL	132 - 10
MPY12H46	♦SOL	133 - 4
MPY12H49	♦SOL	133 - 5
MPY12H59	♦SOL	133 - 88
MPY20C48	♦SOL	132 -102
MPY20C59	♦SOL	133 - 83
MPY25C38	♦SOL	132 - 11
MPY25C49	♦SOL	133 - 6
MPY25H38	♦SOL	132 - 13
MPY25H49	♦SOL	133 - 8
MPY25R38	♦SOL	132 - 12
MPY25R49	♦SOL	133 - 7
MPY25R59	♦SOL	133 - 90
MPY43C79	♦SOL	134 - 98
MPY54C69	♦SOL	134 - 49
MPY54C679	♦SOL	134 - 50
MPY76C59	♦SOL	133 - 81
MPY76C69F	♦SOL	136 - 9
MPY76C569	♦SOL	133 - 82
MR21D	MEHK	43 -104
MR31C	MEHK	43 - 85
MR31D	MEHK	43 - 86
MR31T	MEHK	43 - 87
MR31W	MEHK	43 - 88
MR32D	MEHK	44 - 14
MR51C	MEHK	44 - 15
MR51D	MEHK	44 - 16
MR51T	MEHK	44 - 17
MR51W	MEHK	44 - 18
MR52C	MEHK	44 - 21
MR52D	MEHK	44 - 22
MR52T	MEHK	44 - 23
MR52W	MEHK	44 - 24
MR61D	MEHK	43 - 89
MR62D	MEHK	42 - 15
MR71D	MEHK	44 - 4
MR81D	MEHK	44 - 25
MR133C	MEHK	178 - 91
MRB51C	MEHK	44 - 26
MRB51D	MEHK	44 - 27
MRB51T	MEHK	44 - 28
MRB51W	MEHK	44 - 29
MRB52C	MEHK	43 - 90
MRB52D	MEHK	43 - 91
MRB52T	MEHK	43 - 92
MRB52W	MEHK	43 - 93
MRB61D	MEHK	44 - 5
MRB71D	MEHK	43 - 94
MRB81D	MEHK	44 - 19
MRC31D	MEHK	43 - 95
MRD150	♦MOTA	117 - 47
MRD300	♦MOTA	118 -100
MRD310	♦MOTA	117 - 50
MRD360	♦MOTA	122 - 28
MRD370	♦MOTA	121 - 94
MRD500	♦MOTA	103 -101
MRD510	♦MOTA	103 - 97
MRD601	♦MOTA	116 - 68
MRD602	♦MOTA	118 - 31
MRD603	♦MOTA	118 -108
MRD604	♦MOTA	119 - 57
MRD611	♦MOTA	116 - 69
MRD612	♦MOTA	118 - 32
MRD613	♦MOTA	118 -109
MRD614	♦MOTA	119 - 58
MRD701	♦MOTA	115 - 65
MRD711	♦MOTA	122 - 4
MRD721	♦MOTA	106 - 10
MRD730(A)	♦MOTA	123 - 12
MRD740(A)	♦MOTA	123 - 15
MRD750(A)	♦MOTA	125 - 83
MRD3010	♦MOTA	123 - 13
MRD3011	♦MOTA	123 - 14
MRD3050	♦MOTA	115 - 70
MRD3051	♦MOTA	115 - 93
MRD3054	♦MOTA	116 - 39
MRD3055	♦MOTA	117 - 93
MRD3056	♦MOTA	118 - 15
MS1A	♦FERB	145 - 82
MS1AE	♦FERB	145 - 83
MS1B	♦FERB	145 - 84
MS1BE	♦FERB	145 - 85
MS2A	♦FERB	139 - 94
MS2AE	♦FERB	139 - 95
MS2B(2)	♦FERB	139 -109
MS2BE	♦FERB	139 -110
MS3A	♦FERB	139 - 84
MS3B	♦FERB	139 - 85
MS4A	♦FERB	139 - 86
MS4B(2)	♦FERB	139 - 87
MS5A	♦FERB	139 - 88
MS5B	♦FERB	139 - 89
MS6A	♦FERB	139 - 90
MS6B	♦FERB	139 - 91
MS7A	♦FERB	139 - 92
MS7B	♦FERB	139 - 93
MS9A	♦FERB	145 - 78
MS9AE	♦FERB	145 - 79
MS9B	♦FERB	145 - 80
MS9BE	♦FERB	145 - 81
MS10A	♦FERB	139 - 83
MS11A	♦FERB	144 - 58
MS11AE	♦FERB	144 - 59
MS11B	♦FERB	144 - 61
MS11BE	♦FERB	144 - 62
MS15(2)	♦FERB	137 - 19
MS21D	MEHK	43 -105
MS21DR	MEHK	47 - 17
MS31C	MEHK	50 - 47
MS31D	MEHK	47 - 12
MS31T	MEHK	50 - 48
MS31W	MEHK	50 - 49
MS32D	MEHK	47 - 35
MS51C	MEHK	50 - 57
MS51D	MEHK	49 - 17
MS51T	MEHK	50 - 58
MS51W	MEHK	50 - 59
MS52C	MEHK	50 - 64
MS52D	MEHK	50 - 65
MS52T	MEHK	50 - 66
MS52W	MEHK	50 - 67
MS61D	MEHK	43 - 96
MS62D	MEHK	44 - 6
MS71D	MEHK	43 - 97
MS81D	MEHK	44 - 30
MS131A	MEHK	179 - 43
MS131AF	MEHK	178 - 1
MS131C	MEHK	179 - 44
MS131CF	MEHK	178 - 2
MS132A	♦MEHK	178 - 92
MS132C	♦MEHK	178 - 93
MS133A	MEHK	178 - 94
MS133C	MEHK	178 - 56
MS134A	MEHK	178 - 95
MS134C	MEHK	178 - 96
MS141A	MEHK	183 - 52
MS141C	MEHK	185 - 2
MS143A	MEHK	183 - 53
MS143C	MEHK	185 - 3
MS151A	MEHK	187 - 50
MS151C	MEHK	187 - 49
MS161A	MEHK	194 - 34
MS161C	MEHK	194 - 35
MS162A	MEHK	194 - 33
MS162C	MEHK	194 - 36
MS231A	MEHK	180 - 69
MS231C	MEHK	180 - 70
MS241A	MEHK	184 - 44
MS241C	MEHK	184 - 38
MS251A	MEHK	188 - 71
MS251C	MEHK	188 - 72
MS254A	MEHK	188 - 73
MS254C	MEHK	188 - 74
MS261A	MEHK	194 - 78
MS261C	MEHK	194 - 79
MS433MA	♦MEHK	181 - 47
MS433MC	♦MEHK	181 - 51
MS453MA	MEHK	190 - 9
MS453MC	MEHK	190 - 10
MS461A12	♦MEHK	196 - 33
MS461A24	♦MEHK	196 - 34
MS461A	♦MEHK	196 - 29
MS461C12	♦MEHK	196 - 35
MS461C24	♦MEHK	196 - 36
MS461C	♦MEHK	196 - 30
MS463MC	♦MEHK	195 - 69
MS465A12	♦MEHK	195 - 98
MS465A24	♦MEHK	195 - 99
MS465A	♦MEHK	196 - 31
MS465C12	♦MEHK	195 -100
MS465C24	♦MEHK	195 -101
MS465C	♦MEHK	196 - 32
MS466DA12	♦MEHK	195 -102
MS466DA24	♦MEHK	195 -103
MS466DA	♦MEHK	195 -104
MS466DC12	♦MEHK	195 -105
MS466DC24	♦MEHK	195 -106
MS466DC	♦MEHK	195 -107
MS467DA12	♦MEHK	195 -108
MS467DA24	♦MEHK	195 -109
MS467DA	♦MEHK	195 -110
MS467DC12	♦MEHK	196 - 1
MS467DC24	♦MEHK	196 - 2
MS467DC	♦MEHK	196 - 3
MS468A12	♦MEHK	196 - 4
MS468A24	♦MEHK	196 - 5
MS468A	♦MEHK	196 - 6
MS468C12	♦MEHK	196 - 7
MS468C24	♦MEHK	196 - 8
MS468C	♦MEHK	196 - 9
MS468MA12	♦MEHK	196 - 10
MS468MA24	♦MEHK	196 - 11
MS468MA	♦MEHK	196 - 12
MS468MC12	♦MEHK	196 - 13
MS468MC24	♦MEHK	196 - 14
MS468MC	♦MEHK	196 - 15
MS469DA12	♦MEHK	196 - 16
MS469DA24	♦MEHK	196 - 17
MS469DA	♦MEHK	196 - 18
MS469DC12	♦MEHK	196 - 19
MS469DC24	♦MEHK	196 - 20
MS469DC	♦MEHK	196 - 21
MS477DA12	♦MEHK	196 -103
MS477DA24	♦MEHK	196 -104
MS477DA	♦MEHK	196 -105
MS477DC12	♦MEHK	196 -106
MS477DC24	♦MEHK	196 -107
MS477DC	♦MEHK	196 -108
MS497DA24	MEHK	198 - 26
MS497DC12	MEHK	198 - 27
MS497DC24	MEHK	198 - 28
MS497DC	MEHK	198 - 29
MS498A12	MEHK	198 - 30
MS498A24	MEHK	198 - 31
MS498A	MEHK	198 - 32
MS498C12	MEHK	198 - 33
MS498C24	MEHK	198 - 34
MS498C	MEHK	198 - 35
MS600	♦FERB	138 - 37
MS601	♦FERB	138 - 31
MSB51C	MEHK	50 - 50
MSB51D	MEHK	50 - 68
MSB51T	MEHK	50 - 69
MSB51W	MEHK	50 - 70
MSB52C	MEHK	40 - 40
MSB52D	MEHK	40 - 41
MSB52T	MEHK	40 - 42
MSB52W	MEHK	50 - 51
MSB61D	MEHK	45 - 14
MSB71D	MEHK	45 - 12
MSB81D	MEHK	45 - 21
MSC31D	MEHK	47 - 13
MSL7	REC	45 - 66
MSL7A	♦REC	42 - 37
MSL9-1	♦REC	49 - 72
MSL9-3	♦REC	49 - 73
MSL9A1	♦REC	45 - 52
MSL9A3	♦REC	45 - 53
MSL17	REC	72 - 22
MSL19-1	♦REC	74 - 59
MSL27	♦REC	62 - 95
MSL29-1	♦REC	65 - 13
MSL37	♦REC	66 - 63
MSL39-1	♦REC	67 - 55
MSL47	♦REC	51 -108
MSL49-1	♦REC	53 - 13
MSL57	♦REC	59 - 1
MT1	♦GIC	119 - 38
MT2	♦GIC	119 - 98
MT109G	♦MKT	71 - 84
MT109R	♦MKT	42 - 55
MT109Y	♦MKT	61 - 68
MT110G	♦MKT	73 - 1
MT110R	♦MKT	47 - 72
MT110Y	♦MKT	63 - 89
MT116HRG	♦MKT	79 - 21
MT116OG	♦MKT	79 - 98
MT116YG	♦MKT	79 -106
MT130G	♦MKT	75 - 55
MT130HLG	♦MKT	75 - 56
MT130HLO	♦MKT	57 - 10
MT130HLR	♦MKT	44 - 57
MT130HLY	♦MKT	72 - 76
MT130HR	♦MKT	52 - 41
MT130O	♦MKT	57 - 11
MT130SLG	♦MKT	75 - 57
MT130SLO	♦MKT	57 - 12
MT130SLR	♦MKT	44 - 58
MT130SLY	♦MKT	63 - 41
MT130UR	♦MKT	52 - 49
MT130Y	♦MKT	63 - 42
MT140G	♦MKT	71 - 86
MT140HLG	♦MKT	71 - 87
MT140HLO	♦MKT	56 - 85
MT140HLR	♦MKT	42 - 71
MT140HLY	♦MKT	62 - 72
MT140HR	♦MKT	51 - 52
MT140O	♦MKT	56 - 86
MT140SLG	♦MKT	71 - 88
MT140SLHR	♦MKT	51 - 53
MT140SLO	♦MKT	56 - 87
MT140SLR	♦MKT	42 - 72
MT140SLY	♦MKT	62 - 73
MT140UR	♦MKT	52 - 20
MT140Y	♦MKT	62 - 74
MT200UR	♦MKT	52 - 84
MT205HRG	♦MKT	78 - 95
MT205OG	♦MKT	79 - 92
MT205YG	♦MKT	79 -103
MT208HRG	♦MKT	78 - 96
MT208OG	♦MKT	79 - 93
MT208YG	♦MKT	79 -104
MT210G	♦MKT	70 -108
MT210R	♦MKT	42 - 38
MT220G	♦MKT	70 -109
MT220R	♦MKT	41 - 69
MT220UR	♦MKT	54 - 95
MT221G	♦MKT	76 - 92
MT221HR	♦MKT	52 - 42
MT221O	♦MKT	59 - 22
MT221Y	♦MKT	66 - 93
MT222HRG	♦MKT	89 - 69
MT230G	♦MKT	70 - 64
MT230HR	♦MKT	52 - 14
MT230O	♦MKT	56 - 19
MT230R	♦MKT	43 - 19
MT230UR	♦MKT	52 - 50
MT230Y	♦MKT	61 - 61
MT240G	♦MKT	70 - 65
MT240HR	♦MKT	50 - 86
MT240O	♦MKT	56 - 20
MT240R	♦MKT	43 - 20
MT240UR	♦MKT	51 - 83
MT240Y	♦MKT	61 - 62
MT263G	♦MKT	74 - 80
MT263HR	♦MKT	49 - 93
MT263O	♦MKT	58 - 19
MT263Y	♦MKT	65 - 17
MT330UR	♦MKT	55 - 22
MT340UR	♦MKT	54 - 84
MT350UR	♦MKT	55 - 23
MT360UR	♦MKT	54 - 93
MT400UR	♦MKT	55 - 34
MT430G	♦MKT	77 - 42
MT430HR	♦MKT	53 - 30
MT430O	♦MKT	59 - 64
MT430UG	♦MKT	78 - 4
MT430UR	♦MKT	54 - 46
MT430UY	♦MKT	68 - 47
MT430Y	♦MKT	67 - 76
MT440G	♦MKT	76 - 25
MT440HR	♦MKT	52 - 44
MT440O	♦MKT	59 - 23
MT440UG	♦MKT	77 - 43
MT440UR	♦MKT	53 - 31
MT440UY	♦MKT	67 - 77
MT440Y	♦MKT	66 - 94
MT470G	♦MKT	73 - 66
MT470R	♦MKT	43 - 41
MT470Y	♦MKT	62 - 75
MT530G	♦MKT	77 -104
MT530HR	♦MKT	54 - 27
MT530O	♦MKT	59 -108
MT530UR	♦MKT	54 - 96
MT530Y	♦MKT	68 - 35
MT540G	♦MKT	77 - 24
MT540HR	♦MKT	53 - 44
MT540O	♦MKT	59 - 52
MT540UR	♦MKT	53 - 73
MT540Y	♦MKT	67 - 50
MT550G	♦MKT	76 - 1
MT550O	♦MKT	58 -104
MT550R	♦MKT	51 - 96
MT550Y	♦MKT	66 - 49
MT610G	♦MKT	73 - 67
MT610HR	♦MKT	46 -104
MT610O	♦MKT	56 - 88
MT610R	♦MKT	43 - 42
MT610Y	♦MKT	62 - 76
MT620G	♦MKT	73 - 83
MT620HR	♦MKT	47 - 71
MT620O	♦MKT	57 - 31
MT620Y	♦MKT	63 - 85
MT630G	♦MKT	77 - 49
MT630HR	♦MKT	53 - 38
MT630O	♦MKT	59 - 60
MT630UG	♦MKT	77 -101
MT630UR	♦MKT	54 - 22
MT630UY	♦MKT	68 - 31
MT630Y	♦MKT	67 - 85
MT640G	♦MKT	76 - 46
MT640HR	♦MKT	52 - 55
MT640O	♦MKT	59 - 20
MT640UG	♦MKT	77 - 50
MT640UR	♦MKT	53 - 39
MT640UY	♦MKT	67 - 86
MT640Y	♦MKT	66 - 99
MT800UR	♦MKT	55 - 43
MT850-5VG	♦MKT	71 - 81
MT850-5VO	♦MKT	56 - 84
MT850-5VR	♦MKT	43 - 4
MT850-5VY	♦MKT	62 - 69
MT860-5VG	♦MKT	75 - 38
MT860-5VO	♦MKT	56 -107
MT860-5VR	♦MKT	45 - 47
MT860-5VY	♦MKT	62 -108
MT1000UR	♦MKT	55 - 42
MT1110R	♦MKT	40 - 55
MT1500UR	♦MKT	49 - 6
MT2000UR	♦MKT	48 - 75
MT2230G	♦MKT	73 - 90
MT2230R	♦MKT	46 -105
MT2230Y	♦MKT	64 - 54
MT2240G	♦MKT	71 - 21
MT2240R	♦MKT	42 - 73
MT2240Y	♦MKT	62 - 5
MT2500UR	♦MKT	50 - 94
MT3000UR	♦MKT	50 - 71
MT5491RG	♦MKT	79 - 4
MT8020	♦GIC	119 - 68
MTD533	SOL	161 - 78
MTD533-6	♦SOL	161 - 79
MTD733-5	SOL	161 - 73
MTL703C	♦SOL	161 - 6
MTL716A	SOL	161 - 5
MTL726A	♦SOL	161 - 4
MTN711A	♦SOL	163 - 35
MU02-2201	♦STAJ	90 - 41
MU02-3201	♦STAJ	90 - 50
MU02-4201	♦STAJ	90 - 66
MU02-5201	♦STAJ	90 - 83
MU02-5202	♦STAJ	90 - 86
MU02-9301	♦STAJ	90 -106
MU03-2201	♦STAJ	89 - 39
MU03-2250	♦STAJ	89 - 38
MU03-3201	♦STAJ	89 - 43
MU03-4201	♦STAJ	89 - 48
MU03-5201	♦STAJ	89 - 53
MU03-5202	STAJ	89 - 54
MU03-9201	♦STAJ	89 - 68
MU04-2101	♦STAJ	90 - 3
MU04-3101	♦STAJ	90 - 11
MU04-4101	♦STAJ	90 - 17
MU04-5101	♦STAJ	90 - 26
MU04-5102	♦STAJ	90 - 27
MU07-2101	♦STAJ	90 - 87
MU07-3101	♦STAJ	90 - 88
MU07-4101	♦STAJ	90 - 89
MU07-5101	♦STAJ	90 - 90
MU08-2201	♦STAJ	90 - 42
MU08-3201	♦STAJ	90 - 51
MU08-4201	♦STAJ	90 - 67
MU08-5201	♦STAJ	90 - 84
MU08-9301	♦STAJ	90 -107
MU09-9101	♦STAJ	90 - 7
MU09-9102	♦STAJ	90 - 5
MU09-9103	♦STAJ	90 - 4
MU11-2201	♦STAJ	89 - 67
MU11-3201	♦STAJ	89 - 76
MU11-4201	♦STAJ	89 - 87
MU11-5201	♦STAJ	89 -101
MU13-9101	♦STAJ	90 - 94
MU13-9102	♦STAJ	90 - 93
MU91-2001	♦STAJ	89 - 35
MU91-3001	♦STAJ	89 - 40
MU91-4001	♦STAJ	89 - 45
MU91-5001	♦STAJ	89 - 50
MU92-2001	♦STAJ	89 - 36
MU92-3001	♦STAJ	89 - 41
MU92-4001	♦STAJ	89 - 46
MU92-5001	♦STAJ	89 - 51
MU93-2001	♦STAJ	89 - 37
MU93-3001	♦STAJ	89 - 42
MU93-4001	♦STAJ	89 - 47
MU93-5001	♦STAJ	89 - 52
MU110(2)	♦ANS	233 - 43
MV10B	♦GIC	45 - 59
MV50	♦GIC	48 - 76
MV52	♦GIC	74 - 23
MV53	♦GIC	64 - 85
MV54	♦GIC	47 - 50
MV55A	♦GIC	41 - 5
MV5020	♦GIC	44 - 73
	♦LTN	
MV5021	♦GIC	49 - 79
	♦LTN	
MV5022	♦GIC	44 - 74
	♦LTN	
MV5023	♦GIC	42 -108
	♦LTN	
MV5024	♦GIC	46 - 5
	♦LTN	
MV5025	♦GIC	40 - 76
	♦LTN	
MV5026	♦GIC	40 - 77
	♦LTN	
MV5050	♦GIC	50 - 72
MV5051	♦GIC	49 - 84
MV5052	♦GIC	50 - 73
	♦TFS	
MV5053	♦GIC	49 - 32
MV5054-1	♦GIC	46 - 91
MV5054-2	♦GIC	50 - 19
MV5054-3	♦GIC	51 - 45
MV5054A1	♦GIC	50 - 20
MV5054A2	♦GIC	50 - 21
MV5054A3	♦GIC	50 - 22
MV5055	♦GIC	44 - 75
MV5056	♦GIC	45 - 78
MV5074C	♦GIC	50 - 52
MV5075C	♦GIC	47 - 14
MV5077C	♦GIC	49 - 90
MV5094	♦GIC	45 - 79
MV5152	♦GIC	60 - 29
MV5153	♦GIC	59 - 14
MV5154	♦GIC	59 - 53
MV5174C	♦GIC	59 - 26
MV5177C	♦GIC	58 - 91
MV5252	♦GIC	77 - 70
	♦TFS	
MV5253	♦GIC	73 - 99
	♦TFS	
MV5254	♦GIC	75 - 95
	♦TFS	
MV5274C	♦GIC	72 - 85
MV5277C	♦GIC	71 - 32
MV5352	♦GIC	68 - 89
	♦TFS	
MV5353	♦GIC	67 - 9
	♦TFS	
MV5354	♦GIC	67 - 89
	♦TFS	
MV5374C	♦GIC	66 - 77
MV5377C	♦GIC	65 - 37
MV5752	♦GIC	54 - 82
	♦TFS	
MV5753	♦GIC	52 - 28
	♦TFS	
MV5754	♦GIC	52 -102
	♦TFS	
MV5774C	♦GIC	52 - 51
MV5777C	♦GIC	51 - 84
MV50152	♦GIC	44 - 48
MV50154	♦GIC	42 - 61
MV51640	♦GIC	57 - 4
MV51641	♦GIC	57 - 96
MV51642	♦GIC	58 - 62
MV52124	♦GIC	72 - 98
MV52152	♦GIC	71 - 71
MV52154	♦GIC	70 - 77
MV52640	♦GIC	78 - 66
MV52641	♦GIC	74 - 13
MV52642	♦GIC	75 - 23
MV53123	♦GIC	66 - 78
MV53124	♦GIC	63 - 63
	♦TFS	
MV53152	♦GIC	66 - 30
MV53154	♦GIC	64 - 53
MV53164	♦GIC	94 - 16
MV53173	♦GIC	66 - 81
MV53620	♦GIC	64 - 48
MV53621	♦GIC	66 - 29
MV53622	♦GIC	67 - 1

Δ-Registered with JEDEC by this manufacturer

♦-Mfr's data sheet available in microfilm service

1. TYPE No. CROSS INDEX

IN TYPE NUMBER SEQUENCE

TYPE No.	MFRS	Pg&Line
MV53640	♦GIC	63 - 22
MV53641	♦GIC	64 - 49
MV53642	♦GIC	65 - 85
MV54123	♦GIC	75 -109
MV54124	♦GIC	74 - 99
	♦TFS	
MV54164	♦GIC	93 -105
MV54173	♦GIC	76 - 7
MV54643	♦GIC	76 - 47
MV54644	♦GIC	77 - 51
MV57123	♦GIC	52 - 22
MV57124	♦GIC	47 - 26
MV57152	♦GIC	59 - 12
MV57154	♦GIC	58 - 36
MV57164	♦GIC	93 - 77
MV57173	♦GIC	52 - 32
MV57620	♦GIC	50 - 13
MV57621	♦GIC	52 - 5
MV57622	♦GIC	52 - 97
MV57640	♦GIC	46 - 78
MV57641	♦GIC	48 - 95
MV57642	♦GIC	50 - 81
MV64520	♦GIC	77 - 62
MV64521	♦GIC	78 - 24
MV64530	♦GIC	75 - 96
MV64531	♦GIC	76 - 96
MY21D	MEHK	61 -101
MY31C	MEHK	62 - 81
MY31D	MEHK	62 - 82
MY31T	MEHK	62 - 83
MY31W	MEHK	62 - 84
MY32D	MEHK	65 - 56
MY51C	MEHK	62 - 85
MY51D	MEHK	62 - 86
MY51T	MEHK	62 - 87
MY51W	MEHK	62 - 88
MY52C	MEHK	66 -100
MY52D	MEHK	65 - 58
MY52T	MEHK	67 - 10
MY52W	MEHK	66 - 50
MY61D	MEHK	61 - 98
MY62D	MEHK	62 - 59
MY71D	MEHK	61 -105
MY81D	MEHK	61 -107
MY131A	MEHK	178 - 70
MY131AF	MEHK	177 - 84
MY131C1	MEHK	177 - 85
MY131C	MEHK	178 - 11
MY131CF	MEHK	177 - 86
MY132C	MEHK	179 - 71
MY133A	MEHK	179 - 72
MY133C	MEHK	179 - 73
MY134A	MEHK	179 - 74
MY134C	MEHK	179 - 75
MY141A	MEHK	183 -102
MY141C	MEHK	183 -103
MY143A	MEHK	183 -104
MY143C	MEHK	183 -105
MY151A	MEHK	187 - 96
MY151C	MEHK	187 - 97
MY241A	MEHK	184 - 49
MY241C	MEHK	184 - 50
MY251A	MEHK	189 - 53
MY251C	MEHK	189 - 54
MYB51C	MEHK	62 - 90
MYB51D	MEHK	62 - 91
MYB51T	MEHK	62 - 92
MYB51W	MEHK	62 - 93
MYB52C	MEHK	66 - 95
MYB52D	MEHK	66 - 35
MYB52T	MEHK	67 - 6
MYB52W	MEHK	66 - 36
MYB61D	MEHK	63 - 64
MYB71D	MEHK	63 - 49
MYB81D	MEHK	63 - 68
MYC31D	MEHK	65 - 38
N5613-11	♦REC	193 - 24
N5623-11	♦REC	193 - 29
N5633-11	♦REC	193 - 27
N5643-11	♦REC	193 - 44
N5643R11	♦REC	193 - 45
NAA101	♦STAJ	198 - 97
NAA103	♦STAJ	198 - 98
NAA141	♦STAJ	185 -103
NAA143	♦STAJ	185 -104
NAA161	♦STAJ	194 - 52
NAA163	♦STAJ	194 - 53
NAA241	♦STAJ	186 - 43
NAA243	♦STAJ	186 - 44
NAA261	♦STAJ	194 - 84
NAA263	♦STAJ	194 - 85
NAG101	♦STAJ	198 - 85
NAG103	♦STAJ	198 - 86
NAG141	♦STAJ	185 - 32
NAG143	♦STAJ	185 - 33
NAG161	♦STAJ	194 - 46
NAG163	♦STAJ	194 - 47
NAG241	♦STAJ	186 - 32
NAG243	♦STAJ	186 - 33
NAG261	♦STAJ	194 - 80
NAG263	♦STAJ	194 - 81
NAR101	♦STAJ	198 -103
NAR103	♦STAJ	198 -104
NAR141	♦STAJ	186 - 1
NAR143	♦STAJ	186 - 2
NAR161	♦STAJ	194 - 64
NAR163	♦STAJ	194 - 65
NAR241	♦STAJ	186 - 51
NAR243	♦STAJ	186 - 52
NAR261	♦STAJ	194 - 92
NAR263	♦STAJ	194 - 93
NAY101	♦STAJ	198 - 91
NAY103	♦STAJ	198 - 92
NAY141	♦STAJ	185 -105

TYPE No.	MFRS	Pg&Line
NAY143	♦STAJ	185 -106
NAY161	♦STAJ	194 - 54
NAY163	♦STAJ	194 - 55
NAY241	♦STAJ	186 - 45
NAY243	♦STAJ	186 - 46
NAY261	♦STAJ	194 - 86
NAY263	♦STAJ	194 - 87
NDL1102	♦NECJ	99 - 19
NDL1202	♦NECJ	99 - 23
NDL2102	♦NECJ	106 - 11
NDL2104	♦NECJ	106 - 12
NDL2208	♦NECJ	106 - 13
NDL4103	♦NECJ	81 - 20
NDL4103A	♦NECJ	96 - 44
NDL4103P	♦NECJ	96 - 11
NKA101	♦STAJ	198 - 99
NKA103	♦STAJ	198 -100
NKA141	♦STAJ	185 -107
NKA143	♦STAJ	185 -108
NKA161	♦STAJ	194 - 56
NKA163	♦STAJ	194 - 57
NKA241	♦STAJ	186 - 47
NKA243	♦STAJ	186 - 48
NKA261	♦STAJ	194 - 88
NKA263	♦STAJ	194 - 89
NKG101	♦STAJ	198 - 87
NKG103	♦STAJ	198 - 88
NKG141	♦STAJ	185 - 34
NKG143	♦STAJ	185 - 35
NKG161	♦STAJ	194 - 48
NKG163	♦STAJ	194 - 49
NKG241	♦STAJ	186 - 34
NKG243	♦STAJ	186 - 35
NKG261	♦STAJ	194 - 82
NKG263	STAJ	194 - 83
NKR101	♦STAJ	198 -105
NKR103	♦STAJ	198 -106
NKR141	♦STAJ	186 - 3
NKR143	♦STAJ	186 - 4
NKR161	♦STAJ	194 - 66
NKR163	♦STAJ	194 - 67
NKR241	♦STAJ	186 - 53
NKR243	♦STAJ	186 - 54
NKR261	♦STAJ	194 - 94
NKR263	♦STAJ	194 - 95
NKY101	♦STAJ	198 - 93
NKY103	♦STAJ	198 - 94
NKY141	♦STAJ	185 -109
NKY143	♦STAJ	185 -110
NKY161	STAJ	194 - 58
NKY163	♦STAJ	194 - 59
NKY241	♦STAJ	186 - 49
NKY243	♦STAJ	186 - 50
NKY261	♦STAJ	194 - 90
NKY263	♦STAJ	194 - 91
NL807	♦NAT	224 - 94
NL809	♦NAT	224 - 53
NL821	♦NAT	224 - 95
NL840	♦NAT	224 - 52
NL841	♦NAT	224 - 54
NL842	♦NAT	224 - 55
NL843	♦NAT	224 - 56
NL844	NAT	224 - 57
NL845	NAT	224 - 58
NL846	NAT	224 - 59
NL847	NAT	224 - 60
NL848	♦NAT	224 - 61
NL874	NAT	224 - 62
NL875	NAT	224 - 63
NL876	NAT	224 - 64
NL877	NAT	224 - 65
NL884	NAT	224 - 66
NL900	♦NAT	224 - 67
NL901	♦NAT	224 - 68
NL902	♦NAT	224 - 69
NL903	♦NAT	224 - 70
NL904	♦NAT	224 - 71
NL905	♦NAT	224 - 72
NL934	♦NAT	224 -101
NL4997	NAT	224 - 13
NL4998	♦NAT	224 - 14
NL5016	NAT	224 - 73
NL5025	NAT	224 - 74
NL5440	♦NAT	224 - 75
NL5440A	♦NAT	224 - 76
NL5441	♦NAT	224 - 77
NL5441A	♦NAT	224 - 78
NL5442	♦NAT	224 - 79
NL5442A	♦NAT	224 - 80
NL5560	♦NAT	224 - 33
NL5560/918	NAT	224 - 81
NL5961	NAT	224 - 82
NL5971	NAT	224 - 90
NL5992	♦NAT	224 - 83
NL6034	♦NAT	224 - 96
NL6844A	NAT	224 - 84
NL7009	♦NAT	224 - 16
NL7037	♦NAT	224 -102
NL7094	♦NAT	224 -103
NL7977/4032	♦NAT	224 - 17
NL8037/5031	NAT	224 - 85
NL8091	♦NAT	224 -100
NL8421/5092	♦NAT	224 - 86
NL8422/5991	♦NAT	224 - 87
NL8423/6091	♦NAT	224 - 97
NL8502	NAT	224 - 18
NL8502/4021	♦NAT	224 - 19
NL8754/840	♦NAT	224 - 88
NL50911	♦NAT	224 - 89
NORP11	♦SXI	133 - 89
NORP12	SXI	132 - 83
NORP13	SXI	131 - 89
NSA0038	♦TFS	175 - 32
NSA101	♦STAJ	198 -101

TYPE No.	MFRS	Pg&Line
NSA103	♦STAJ	198 -102
NSA141	♦STAJ	182 - 67
NSA143	♦STAJ	182 - 68
NSA161	♦STAJ	194 - 60
NSA163	♦STAJ	194 - 61
NSA598	TFS	175 - 50
NSA1166	♦TFS	175 - 44
NSA1188	♦TFS	175 - 47
NSA1198	♦TFS	175 - 52
NSA1541A	♦TFS	175 - 86
NSA1588A	♦TFS	175 - 87
NSA1605	♦TFS	175 - 88
NSA5120A	♦TFS	175 - 69
NSA5140A	♦TFS	175 - 70
NSA7120	♦TFS	175 - 68
NSB3382	♦LTN	181 - 39
NSB3881	♦LTN	181 - 40
	TFS	
NSB3882	♦LTN	181 - 41
NSB5382	♦LTN	189 -103
	TFS	
NSB5388	♦TFS	190 - 11
NSB5881	♦LTN	189 -104
	TFS	
NSB5882	♦LTN	189 -105
	TFS	
NSB5931	♦TFS	190 - 33
NSB7382	♦LTN	196 - 96
NSB7881	♦LTN	196 - 97
	♦TFS	
NSB7882	♦LTN	196 - 98
	TFS	
NSC055FA	NSC	83 - 93
NSC55FB	TFS	84 - 84
NSC55FC	TFS	85 - 25
NSC55FD	TFS	85 - 93
NSC55PA	TFS	83 - 94
NSC55PB	TFS	84 - 85
NSC55PC	TFS	85 - 26
NSC55PD	TFS	85 - 94
NSC209-5VG	♦TFS	71 - 15
NSC209-5VR	♦TFS	44 - 40
NSC209-5VY	♦TFS	61 -110
NSC210G	♦TFS	71 - 16
NSC309R2	TFS	49 -107
NSC526R2	♦TFS	50 - 23
NSC526R	♦TFS	43 - 36
NSC526Y2	♦TFS	65 - 31
NSC526Y	♦TFS	61 - 80
NSC554G6	♦TFS	76 - 60
NSC554G15	♦TFS	77 - 67
NSC554G24	♦TFS	77 -106
NSC554G	♦TFS	74 - 75
NSC554R9	♦TFS	52 -105
NSC554R12	♦TFS	53 - 52
NSC554R	♦TFS	49 -108
NSC554Y6	♦TFS	66 -108
NSC554Y12	♦TFS	67 - 90
NSC554Y	♦TFS	65 - 25
NSC556G2	♦TFS	74 - 69
NSC556G3	♦TFS	75 - 40
NSC556G	♦TFS	71 - 17
NSC556R2	♦TFS	50 - 24
NSC556R3	♦TFS	51 - 46
NSC556R	♦TFS	44 - 49
NSC556Y	♦TFS	62 - 1
NSC3010	♦TFS	46 - 92
NSC3011	♦TFS	46 - 93
NSC3020	♦TFS	44 - 50
NSC3021	♦TFS	44 - 51
NSC3040	♦TFS	62 - 55
NSC3041	♦TFS	62 - 56
NSC3090	♦TFS	72 - 67
NSC3091	♦TFS	72 - 68
NSC4850G	♦TFS	71 - 18
NSC4850R	♦TFS	44 - 52
NSC4850Y	♦TFS	62 - 2
NSC5053G	♦TFS	71 - 19
NSC5053R	♦TFS	44 - 53
NSC5053Y	♦TFS	62 - 3
NSC5057R3	♦TFS	51 - 47
NSC5057R	♦TFS	46 - 94
NSC5059G	♦TFS	71 - 20
NSC5059R	♦TFS	44 - 54
NSC5059Y	♦TFS	62 - 4
NSC5547R9	♦TFS	52 -106
NSC5547R15	♦TFS	53 - 70
NSC5547R	♦TFS	50 - 25
NSC5549G	♦TFS	74 - 76
NSC5567R2	♦TFS	50 - 26
NSC5567R3	♦TFS	51 - 48
NSC5567R	♦TFS	46 - 95
NSC5569G2	♦TFS	74 - 77
NSC5569R2	♦TFS	50 - 27
NSC5569Y2	♦TFS	65 - 32
NSG101	♦STAJ	198 - 89
NSG103	♦STAJ	198 - 90
NSG141	♦STAJ	182 - 55
NSG143	♦STAJ	182 - 56
NSG161	♦STAJ	194 - 50
NSG163	♦STAJ	194 - 51
NSL293(1)	SXI	130 - 31
NSL294(1)	SXI	130 - 61
NSL297(1)	SXI	132 - 48
NSL312	♦SXI	134 - 86
NSL313	SXI	134 - 8
NSL314	SXI	133 - 43
NSL315	SXI	135 - 54
NSL316	SXI	135 - 41
NSL317	SXI	135 - 7
NSL318	SXI	134 - 51
NSL361	♦SXI	134 - 73
NSL362	♦SXI	133 -110
NSL363	♦SXI	133 - 29

TYPE No.	MFRS	Pg&Line
NSL364	♦SXI	132 - 17
NSL365	♦SXI	135 - 55
NSL366	♦SXI	135 - 39
NSL367	♦SXI	134 -105
NSL381	♦SXI	134 - 41
NSL382	♦SXI	133 - 76
NSL383	♦SXI	132 - 68
NSL384	♦SXI	131 - 66
NSL385	♦SXI	135 - 47
NSL386	♦SXI	135 - 30
NSL387	♦SXI	134 - 77
NSL392(1)	♦SXI	131 - 79
NSL393(1)	♦SXI	130 -106
NSL394(1)	♦SXI	130 - 62
NSL395(1)	♦SXI	134 - 30
NSL396(1)	♦SXI	133 - 64
NSL397(1)	♦SXI	132 - 49
NSL412	♦SXI	134 - 88
NSL413	♦SXI	134 - 10
NSL414	♦SXI	133 - 45
NSL415	♦SXI	135 - 58
NSL416	♦SXI	135 - 43
NSL417	♦SXI	135 - 9
NSL418	SXI	134 - 56
NSL444(1)	SXI	132 - 21
NSL445(1)	SXI	133 -109
NSL446(1)	SXI	133 - 23
NSL447(1)	SXI	132 - 19
NSL461	♦SXI	134 - 74
NSL462	♦SXI	134 - 1
NSL463	♦SXI	133 - 30
NSL464	♦SXI	132 - 18
NSL465	♦SXI	135 - 56
NSL466	♦SXI	135 - 40
NSL467	♦SXI	134 -106
NSL481	♦SXI	134 - 42
NSL482	♦SXI	133 - 77
NSL483	♦SXI	132 - 69
NSL484	♦SXI	131 - 67
NSL485	♦SXI	135 - 48
NSL486	♦SXI	135 - 31
NSL487	♦SXI	134 - 75
NSL492(1)	♦SXI	131 - 80
NSL493(1)	♦SXI	131 - 5
NSL494(1)	♦SXI	130 - 67
NSL495(1)	♦SXI	134 - 31
NSL496(1)	♦SXI	133 - 65
NSL497(1)	♦SXI	132 - 54
NSL530	♦SXI	105 - 34
NSL580	SXI	105 - 41
NSL701	SXI	138 - 64
NSL701-1	SXI	138 - 65
NSL701-4A	SXI	128 - 28
NSL701-5A	SXI	128 - 39
NSL701-6A	SXI	128 - 40
NSL701-7A	SXI	128 - 42
NSL701-8A	SXI	128 - 43
NSL701-9	SXI	128 - 45
NSL702	SXI	138 - 75
NSL703	SXI	138 -101
NSL705	SXI	138 -107
NSL706	SXI	138 -105
NSL707	SXI	138 -106
NSL708	SXI	138 - 95
NSL710	SXI	138 -108
NSL710BG	♦SXI	110 - 12
NSL720	SXI	138 - 50
NSL751	SXI	138 -102
NSL780BG	SXI	110 - 14
NSL781	SXI	138 - 42
NSL782	SXI	138 - 72
NSL791	SXI	138 - 76
NSL792	SXI	138 - 86
NSL801	SXI	137 - 97
NSL802	SXI	137 - 99
NSL803	SXI	137 -103
NSL805	SXI	137 -107
NSL806	SXI	137 -105
NSL807	SXI	137 -106
NSL808	SXI	137 -102
NSL810	SXI	137 - 95
NSL810BG	♦SXI	110 - 11
NSL811	♦SXI	108 - 25
NSL811BG	♦SXI	110 - 16
NSL812	♦SXI	108 - 26
NSL813	♦SXI	108 - 27
NSL814	♦SXI	108 - 28
NSL815	♦SXI	108 - 29
NSL820	SXI	137 - 94
NSL851	SXI	137 -104
NSL880BG	SXI	110 - 13
NSL881	SXI	137 - 96
NSL882	SXI	137 - 98
NSL883	♦SXI	108 - 31
NSL883BG	SXI	110 - 17
NSL891	SXI	137 -100
NSL892	SXI	137 -101
NSL893	♦SXI	108 - 37
NSL1012	TFS	44 - 31
NSL2129/3	SXI	131 - 21
NSL2129/6	SXI	134 - 12
NSL2930	♦SXI	131 - 1
NSL2931	♦SXI	131 - 2
NSL2932	♦SXI	131 - 3
NSL2933	♦SXI	131 - 4
NSL2940	♦SXI	130 - 63
NSL2941	♦SXI	130 - 64
NSL2942	♦SXI	130 - 65
NSL2943	♦SXI	130 - 66
NSL2970	♦SXI	132 - 50
NSL2971	♦SXI	132 - 51
NSL2972	♦SXI	132 - 52
NSL2973	♦SXI	132 - 53
NSL3122	SXI	134 - 87

TYPE No.	MFRS	Pg&Line
NSL3132	SXI	134 - 9
NSL3142	SXI	133 - 44
NSL3152	SXI	135 - 57
NSL3162	SXI	135 - 42
NSL3172	SXI	135 - 8
NSL3182	SXI	134 - 52
NSL3810	♦SXI	130 - 47
NSL3812	♦SXI	130 - 48
NSL3820	♦SXI	130 - 35
NSL3822	♦SXI	130 - 36
NSL3830	♦SXI	130 - 32
NSL3832	♦SXI	130 - 33
NSL3840	♦SXI	130 - 28
NSL3842	♦SXI	130 - 29
NSL3850	♦SXI	131 - 77
NSL3852	♦SXI	131 - 78
NSL3860	♦SXI	131 - 62
NSL3862	♦SXI	131 - 63
NSL3870	♦SXI	131 - 36
NSL3872	♦SXI	131 - 37
NSL3920	♦SXI	131 - 81
NSL3921	♦SXI	131 - 82
NSL3922	♦SXI	131 - 83
NSL3923	♦SXI	131 - 84
NSL3930	♦SXI	131 - 6
NSL3931	♦SXI	131 - 7
NSL3932	♦SXI	131 - 8
NSL3933	♦SXI	131 - 9
NSL3940	♦SXI	130 - 68
NSL3941	♦SXI	130 - 69
NSL3942	♦SXI	130 - 70
NSL3943	♦SXI	130 - 71
NSL3950	♦SXI	134 - 32
NSL3951	♦SXI	134 - 33
NSL3952	♦SXI	134 - 34
NSL3953	♦SXI	134 - 35
NSL3960	♦SXI	133 - 66
NSL3961	♦SXI	133 - 67
NSL3962	♦SXI	133 - 68
NSL3963	♦SXI	133 - 69
NSL3970	♦SXI	132 - 55
NSL3971	♦SXI	132 - 56
NSL3972	♦SXI	132 - 57
NSL3973	♦SXI	132 - 58
NSL4122	SXI	134 - 89
NSL4132	SXI	134 - 11
NSL4142	SXI	133 - 46
NSL4152	SXI	135 - 59
NSL4162	SXI	135 - 44
NSL4172	SXI	135 - 10
NSL4182	SXI	134 - 57
NSL4440	♦SXI	131 - 42
NSL4442	♦SXI	131 - 43
NSL4450	♦SXI	130 - 55
NSL4452	♦SXI	135 - 60
NSL4460	♦SXI	130 - 34
NSL4462	♦SXI	135 - 38
NSL4470	♦SXI	130 - 30
NSL4472	♦SXI	135 - 26
NSL4810	♦SXI	130 - 87
NSL4812	♦SXI	130 - 88
NSL4820	♦SXI	130 - 49
NSL4822	♦SXI	130 - 50
NSL4830	♦SXI	130 - 37
NSL4832	♦SXI	130 - 38
NSL4840	♦SXI	130 - 26
NSL4842	♦SXI	130 - 27
NSL4850	♦SXI	132 - 76
NSL4852	♦SXI	132 - 77
NSL4860	♦SXI	131 -101
NSL4862	♦SXI	131 -102
NSL4870	♦SXI	131 - 74
NSL4872	♦SXI	131 - 75
NSL4920	♦SXI	131 - 85
NSL4921	♦SXI	131 - 86
NSL4922	♦SXI	131 - 87
NSL4923	♦SXI	131 - 88
NSL4930	♦SXI	131 - 10
NSL4931	♦SXI	131 - 11
NSL4932	♦SXI	131 - 12
NSL4933	♦SXI	131 - 13
NSL4940	♦SXI	130 - 72
NSL4941	♦SXI	130 - 73
NSL4942	♦SXI	130 - 74
NSL4943	♦SXI	130 - 75
NSL4944	♦TFS	41 - 36
NSL4950	♦SXI	134 - 36
NSL4951	♦SXI	134 - 37
NSL4952	♦SXI	134 - 38
NSL4953	♦SXI	134 - 39
NSL4960	♦SXI	133 - 70
NSL4961	♦SXI	133 - 71
NSL4962	♦SXI	133 - 72
NSL4963	♦SXI	133 - 73
NSL4970	♦SXI	132 - 59
NSL4971	♦SXI	132 - 60
NSL4972	♦SXI	132 - 61
NSL4973	♦SXI	132 - 62
NSL5020	♦TFS	43 - 98
NSL5023	♦TFS	43 - 99
NSL5026	♦TFS	43 -100
NSL5027	♦TFS	42 -104
NSL5056	♦TFS	48 - 74
NSL5074	♦TFS	42 - 3
NSL5086	♦TFS	42 - 4
NSL5252	♦TFS	70 -110
NSL5253	♦TFS	71 - 1
NSL5274	TFS	73 -100
NSL5286	♦TFS	70 - 48
NSL5352	♦TFS	61 - 99
NSL5353	♦TFS	61 -100
NSL5386	♦TFS	64 - 78
NSL5760	SXI	103 - 29
NSL5786	♦TFS	49 - 18

Δ-Registered with JEDEC by this manufacturer

♦-Mfr's data sheet available in microfilm service

1. TYPE No. CROSS INDEX

IN TYPE NUMBER SEQUENCE

TYPE No.	MFRS	Pg&Line
NSL5920	♦TFS	48 - 84
NSL5921	♦TFS	52 - 1
NSL5925	SXI	143 -101
NSL5974	♦TFS	47 - 15
NSL5978	SXI	143 -100
NSL5986	♦TFS	47 - 36
NSL6122	♦SXI	143 -102
NSL6134	♦SXI	144 - 49
NSL6135	♦SXI	143 -104
NSL6136	♦SXI	143 -105
NSL7210	♦TFS	78 - 59
NSL7230	♦TFS	77 -107
NSL7310	♦TFS	68 -103
NSL7330	♦TFS	68 - 36
NSL7810	♦TFS	55 - 7
NSL7816	♦TFS	54 - 67
NSL7830	♦TFS	54 - 37
NSL7836	♦TFS	52 - 85
NSL8932	SXI	137 - 20
NSM1416	♦TFS	201 -100
NSM3914	♦NSC	93 - 58
NSM3915	♦NSC	93 - 59
	♦TFS	
NSM3916	♦TFS	93 - 60
NSM4000	♦TFS	201 - 71
NSM4000A	♦TFS	201 - 72
NSM4005A	♦TFS	201 - 76
NSM4307	♦TFS	201 - 70
NSM4507	♦TFS	201 - 74
NSM4508	♦TFS	201 - 75
NSM4700	♦TFS	201 - 73
NSM39142	♦NSC	94 - 7
NSM39143	♦NSC	93 - 99
NSM39146	♦NSC	93 - 87
NSM39147	♦NSC	93 - 88
NSM39148	♦NSC	93 - 84
NSM39151	♦NSC	93 - 61
NSM39152	♦NSC	94 - 8
NSM39153	♦NSC	93 -100
NSM39158	♦NSC	93 - 85
NSM39162	♦NSC	94 - 9
NSM39163	♦NSC	93 -101
NSM39168	♦NSC	93 - 86
NSM39169	♦NSC	93 - 89
NSN334	♦LTN	180 - 55
NSN373	♦LTN	180 - 56
	TFS	
NSN374	♦LTN	180 - 57
	TFS	
NSN381	♦LTN	180 - 58
	TFS	
NSN382	♦LTN	180 - 59
	TFS	
NSN534	♦LTN	188 - 41
NSN581	♦LTN	188 - 42
	TFS	
NSN582	♦LTN	188 - 43
	TFS	
NSN583	♦LTN	188 - 44
	TFS	
NSN584	♦LTN	188 - 45
	TFS	
NSN734	♦LTN	196 - 88
NSN781	♦LTN	196 - 89
NSN782	♦LTN	196 - 90
NSN783	♦LTN	196 - 91
NSN784	♦LTN	196 - 92
NSR101	♦STAJ	198 -107
NSR103	♦STAJ	198 -108
NSR141	♦STAJ	182 - 71
NSR143	♦STAJ	182 - 72
NSR161	♦STAJ	194 - 68
NSR163	♦STAJ	194 - 69
NSY101	♦STAJ	198 - 95
NSY103	♦STAJ	198 - 96
NSY141	♦STAJ	182 - 69
NSY143	♦STAJ	182 - 70
NSY161	♦STAJ	194 - 62
NSY163	♦STAJ	194 - 63
NXA1010	♦APX	232 - 58
NXA1011(A)	♦MULB	232 - 59
♦PHIN	♦RTCF	
	♦VALG	
NXA1020	♦APX	232 - 60
NXA1021(A)	♦MULB	232 - 61
♦PHIN	♦RTCF	
	♦VALG	
NXA1031(A)	♦MULB	232 - 62
♦RTCF	♦VALG	
NXA1041(A)	♦MULB	232 - 63
♦PHIN	♦RTCF	
	♦VALG	
O32	♦GIC	56 - 83
O43	REC	225 - 32
O44	REC	225 - 23
O45	REC	225 - 24
O63	REC	225 - 47
O64	REC	225 - 48
O65	REC	225 - 74
OBG1000	♦SIEG	93 - 95
	♦SIEX	
OBG4830	♦SIEG	93 - 96
	♦SIEX	
OC22(1)	♦OKIJ	165 - 33
OC27	♦OKIJ	165 - 52
OC33(1)	♦OKIJ	164 - 97
OC34(1)	♦OKIJ	165 - 92
OC36(1)	♦OKIJ	165 - 93
OC40(1)	♦OKIJ	173 - 35
OC68	♦OKIJ	165 - 55
OC1000	♦MAI	232 - 21
OC1100	♦MAI	232 - 22
OC1200	♦MAI	232 - 23
OC1250	♦MAI	232 - 24

TYPE No.	MFRS	Pg&Line
OC1300	♦MAI	232 - 25
OC1310	♦MAI	232 - 26
OC1315	♦MAI	232 - 27
OC1400	♦MAI	232 - 28
OC1500	MAI	232 - 29
OE4M	OPE	113 - 4
OE10-01	♦OPE	112 - 91
OE10-02	♦OPE	112 - 49
OE10-03	♦OPE	112 - 42
OE10-04	♦OPE	112 - 39
OE15-51	♦OPE	112 - 92
OE15-52	♦OPE	112 - 50
OE15-53	♦OPE	112 - 43
OE15-181	♦OPE	112 - 93
OE20-01	♦OPE	113 - 50
OE20-02	♦OPE	113 - 25
OE20-03	♦OPE	113 - 19
OE25-51	♦OPE	113 - 51
OE25-52	♦OPE	113 - 26
OE25-53	♦OPE	113 - 20
OE25-181	♦OPE	113 - 52
OF1100	MAI	232 - 30
OF1150	MAI	232 - 31
OF1300-005	MAI	232 - 32
OF1300-010	MAI	232 - 33
OF1300-020	MAI	232 - 34
OF1300-030	MAI	232 - 35
OF1300-040	MAI	232 - 36
OF1300-050	MAI	232 - 37
OLB2300(A)	♦SIEG	89 - 75
	♦SIEX	
OLB2350(A)	♦SIEG	90 - 52
	♦SIEX	
OLB2600(A)	♦SIEG	90 - 48
	♦SIEX	
OLB2620(A)	♦SIEG	90 -110
	♦SIEX	
OLB2655(A)	♦SIEG	90 - 53
	♦SIEX	
OLB2685(A)	♦SIEG	91 - 1
	♦SIEX	
ON1102	MATJ	155 - 60
ON1103	MATJ	151 - 71
ON1104	MATJ	156 - 64
ON1105	MATJ	151 - 46
ON1106	MATJ	151 - 47
ON1107	MATJ	150 - 27
ON1108	MATJ	155 - 61
ON1109	MATJ	152 - 13
ON1110	MATJ	157 - 96
ON1111	MATJ	152 - 14
ON1112	MATJ	152 - 15
ON1113	♦MATJ	151 -105
ON1114	MATJ	154 - 5
ON1122	MATJ	151 - 43
ON1128	MATJ	151 - 44
ON1128S	MATJ	152 - 52
ON1179	MATJ	152 - 16
ON1215	MATJ	169 - 4
ON1501	♦MATJ	160 - 57
ON1503	♦MATJ	160 - 58
ON2152	MATJ	160 - 25
ON2153	MATJ	159 - 92
ON2160	MATJ	159 - 73
ON2170	MATJ	160 - 10
ON2253	MATJ	160 - 26
ON2270	MATJ	159 - 71
ON3100	MATJ	165 - 8
ON3105	MATJ	166 -101
ON3110	MATJ	165 - 35
ON3111	MATJ	165 - 88
ON3112	MATJ	165 - 89
ON3113	MATJ	165 - 90
ON3151	MATJ	166 -104
ON3152	MATJ	166 -105
ON3153	MATJ	166 -106
ON3205	MATJ	169 - 69
ON3301	MATJ	164 - 5
ON3401	♦MATJ	173 -110
ON3500	MATJ	171 - 27
OP004-30	REC	45 - 67
OP004-60	REC	50 - 30
OP004-160	REC	76 - 9
OP004-260	REC	66 - 82
OP123	♦TRWO	82 - 53
OP124	♦TRWO	83 - 76
OP131(A)	♦TRWO	85 - 19
OP131W	♦TRWO	85 - 20
OP132(A)	♦TRWO	85 - 61
OP132W	♦TRWO	85 - 62
OP133(A)	♦TRWO	85 - 95
OP133W	♦TRWO	85 - 96
OP140	♦TRWO	81 - 4
OP140SLA	♦TRWO	81 - 5
OP140SLB	♦TRWO	81 - 6
OP140SLC	♦TRWO	81 - 7
OP140SLD	♦TRWO	81 - 8
OP160	♦TRWO	82 - 78
OP160SLA	♦TRWO	81 - 9
OP160SLB	♦TRWO	81 - 10
OP160SLC	♦TRWO	81 - 11
OP160SLD	♦TRWO	81 - 12
OP160W	♦TRWO	82 - 65
OP161SL	♦TRWO	82 - 66
OP161SLA	♦TRWO	82 - 67
OP161SLB	♦TRWO	82 - 68
OP161SLC	♦TRWO	82 - 69
OP161SLD	♦TRWO	82 - 70
OP169SL	♦TRWO	82 - 13
OP169SLC	♦TRWO	82 - 14
OP169SLD	♦TRWO	82 - 15
OP223	♦TRWO	83 - 19
OP224	♦TRWO	84 -108
OP231(A)	♦TRWO	86 - 43

TYPE No.	MFRS	Pg&Line
OP231W	♦TRWO	86 - 44
OP232(A)	♦TRWO	86 - 84
OP232W	♦TRWO	86 - 85
OP233(A)	♦TRWO	86 -109
OP233W	♦TRWO	87 - 1
OP240	♦TRWO	83 - 62
OP240SLA	♦TRWO	83 - 63
OP240SLB	♦TRWO	83 - 64
OP240SLC	♦TRWO	83 - 65
OP260	♦TRWO	83 - 46
OP260SLA	♦TRWO	83 - 47
OP260SLB	♦TRWO	83 - 48
OP260SLC	♦TRWO	83 - 49
OP290A	♦TRWO	88 - 76
OP290B	♦TRWO	88 - 74
OP290C	♦TRWO	88 - 72
OP291A	♦TRWO	87 - 42
OP291B	♦TRWO	87 - 10
OP291C	♦TRWO	86 - 80
OP292A	♦TRWO	88 - 83
OP292B	♦TRWO	84 - 79
OP292C	♦TRWO	84 - 42
OP293A	♦TRWO	87 - 43
OP293B	♦TRWO	87 - 11
OP293C	♦TRWO	86 - 81
OP295A	♦TRWO	88 - 34
OP295B	♦TRWO	88 - 15
OP295C	♦TRWO	87 - 80
OP296A	♦TRWO	85 - 57
OP296B	♦TRWO	85 - 11
OP296C	♦TRWO	84 - 62
OP297A	♦TRWO	83 - 28
OP297B	♦TRWO	82 -107
OP297C	♦TRWO	82 - 34
OP298A	♦TRWO	84 - 95
OP298B	♦TRWO	84 - 96
OP298C	♦TRWO	84 - 63
OP300	♦TRWO	121 - 45
OP301	♦TRWO	121 - 46
OP302	♦TRWO	121 - 68
OP303	♦TRWO	121 - 97
OP304	♦TRWO	122 - 11
OP305	♦TRWO	122 - 29
OP500	♦TRWO	117 - 64
OP500SLA	♦TRWO	120 - 24
OP500SLB	♦TRWO	120 - 17
OP500SLC	♦TRWO	120 - 7
OP500SLD	♦TRWO	119 - 88
OP500W	♦TRWO	116 - 62
OP501SLA	♦TRWO	120 - 25
OP501SLB	♦TRWO	120 - 18
OP501SLC	♦TRWO	120 - 8
OP501SLD	♦TRWO	119 - 89
OP502	♦TRWO	117 - 4
OP502A	♦TRWO	117 - 29
OP502B	♦TRWO	118 - 47
OP508F	♦TRWO	116 - 63
OP509SLC	♦TRWO	115 -110
OP509SLD	♦TRWO	115 - 84
OP530	♦TRWO	121 - 30
OP538F	♦TRWO	121 - 61
OP550	♦TRWO	117 - 65
OP550SLA	♦TRWO	120 - 26
OP550SLB	♦TRWO	120 - 19
OP550SLC	♦TRWO	120 - 9
OP550SLD	♦TRWO	119 - 90
OP560	♦TRWO	116 - 35
OP593A	♦TRWO	118 - 68
OP593B	♦TRWO	118 - 16
OP593C	♦TRWO	117 - 35
OP598A	♦TRWO	119 - 67
OP598B	♦TRWO	119 - 16
OP598C	♦TRWO	120 - 15
OP600	♦TRWO	116 - 70
OP601	♦TRWO	116 - 71
OP602	♦TRWO	118 - 33
OP603	♦TRWO	118 -110
OP604	♦TRWO	119 - 59
OP640	♦TRWO	116 - 59
OP641	♦TRWO	116 - 60
OP642	♦TRWO	118 - 27
OP643	♦TRWO	118 -102
OP644	♦TRWO	119 - 52
OP702	♦TRWO	118 - 78
OP800	♦TRWO	116 - 40
OP800W	♦TRWO	116 - 2
OP801	♦TRWO	116 - 41
OP801W	♦TRWO	116 - 42
OP802	♦TRWO	118 - 17
OP802W	♦TRWO	118 - 49
OP803	♦TRWO	118 - 93
OP804	♦TRWO	119 - 46
OP805	♦TRWO	119 -108
OP830	♦TRWO	122 - 33
OP830W	♦TRWO	122 - 1
OP841	♦TRWO	116 - 43
OP841W	♦TRWO	116 - 3
OP842	♦TRWO	118 - 18
OP842W	♦TRWO	117 - 36
OP843	♦TRWO	119 - 17
OP843W	♦TRWO	117 - 94
OP844	♦TRWO	119 - 47
OP844W	♦TRWO	118 - 19
OP845	♦TRWO	119 -109
OP845W	♦TRWO	118 - 50
OP900	♦TRWO	107 - 66
OP903	♦TRWO	107 - 15
OP903W	♦TRWO	107 - 74
OP905F	♦TRWO	104 - 60
OP913	♦TRWO	103 - 67
OP913W	♦TRWO	103 - 68
OP915F	♦TRWO	105 - 87
OP12502	♦TRWO	173 -107
OPA16	♦OKIJ	128 - 48

TYPE No.	MFRS	Pg&Line
OPA64T	♦OKIJ	128 - 72
OPA128	♦OKIJ	128 - 82
OPA128T	♦OKIJ	128 - 83
OPA256	♦OKIJ	128 - 92
OPA256C1	♦OKIJ	232 - 64
OPA512T	♦OKIJ	128 -100
OPA864	♦OKIJ	129 - 3
OPA1024	♦OKIJ	129 - 6
OPA1728	♦OKIJ	129 - 15
OPA2048CA	♦OKIJ	232 - 65
OPB125A	♦TRWO	160 - 36
OPB253A	♦TRWO	159 - 66
OPB508	♦TRWO	149 - 4
OPB512	♦TRWO	149 - 14
OPB512A	♦TRWO	149 - 15
OPB703A	♦TRWO	159 - 63
OPB706A	♦TRWO	160 - 17
OPB706B	♦TRWO	160 - 14
OPB706C	♦TRWO	159 -110
OPB707A	♦TRWO	160 - 56
OPB707B	♦TRWO	160 - 54
OPB707C	♦TRWO	160 - 44
OPB708	♦HON	159 - 62
	♦TRWO	
OPB709	♦HON	159 - 57
	♦TRWO	
OPB710	♦TRWO	159 -106
OPB711	♦TRWO	159 - 82
OPB712	♦TRWO	160 - 55
OPB730	♦TRWO	160 - 29
OPB804	♦TRWO	153 - 44
OPB806	♦TRWO	155 - 66
OPB813S3	♦TRWO	151 - 33
OPB813S5	♦TRWO	151 - 92
OPB813S7	♦TRWO	152 - 31
OPB816	♦TRWO	153 - 45
OPB817	♦TRWO	154 - 85
OPB818	♦TRWO	151 - 39
OPB819S10	♦TRWO	151 - 72
OPB820	♦TRWO	153 - 46
OPB820S5	♦TRWO	151 - 59
OPB820S7	♦TRWO	152 - 17
OPB820S12	♦TRWO	153 - 47
OPB821	♦TRWO	153 - 48
OPB821S5	♦TRWO	151 - 60
OPB821S7	♦TRWO	152 - 18
OPB821S12	♦TRWO	152 - 44
OPB822S	♦TRWO	159 - 10
OPB822SD	♦TRWO	159 - 5
OPB823	♦TRWO	153 - 49
OPB823A	♦TRWO	153 - 50
OPB824	♦TRWO	155 - 23
OPB824A	♦TRWO	151 - 10
OPB825	♦TRWO	153 - 51
OPB825A	♦TRWO	164 - 6
OPB825B	♦TRWO	164 - 7
OPB826S	♦TRWO	159 - 11
OPB826SD	♦TRWO	159 - 6
OPB831S20	♦TRWO	152 - 51
OPB835	♦TRWO	155 - 64
OPB836	♦TRWO	153 - 52
OPB840	♦TRWO	149 - 11
OPB841	♦TRWO	149 - 12
OPB842	♦TRWO	149 - 13
OPB847	♦TRWO	157 - 26
OPB848	♦TRWO	155 - 24
OPB861L51	♦TRWO	154 - 86
OPB861L55	♦TRWO	154 - 87
OPB861N51	♦TRWO	154 - 88
OPB861N55	♦TRWO	154 - 89
OPB861P51	♦TRWO	154 - 90
OPB861P55	♦TRWO	154 - 91
OPB861T51	♦TRWO	154 - 92
OPB861T55	♦TRWO	154 - 93
OPB862L51	♦TRWO	156 - 7
OPB862L55	♦TRWO	156 - 8
OPB862N51	♦TRWO	156 - 9
OPB862N55	♦TRWO	156 - 10
OPB862P51	♦TRWO	156 - 11
OPB862P55	♦TRWO	156 - 12
OPB862T51	♦TRWO	156 - 13
OPB862T55	♦TRWO	156 - 14
OPB865L51	♦TRWO	153 - 53
OPB865L55	♦TRWO	153 - 54
OPB865N51	♦TRWO	153 - 55
OPB865N55	♦TRWO	153 - 56
OPB865P51	♦TRWO	153 - 57
OPB865P55	♦TRWO	153 - 58
OPB865T51	♦TRWO	153 - 59
OPB865T55	♦TRWO	153 - 60
OPB866L51	♦TRWO	154 - 94
OPB866L55	♦TRWO	154 - 95
OPB866N51	♦TRWO	154 - 96
OPB866N55	♦TRWO	154 - 97
OPB866P51	♦TRWO	154 - 98
OPB866P55	♦TRWO	154 - 99
OPB866T51	♦TRWO	154 -100
OPB866T55	♦TRWO	154 -101
OPB867L51	♦TRWO	156 - 15
OPB867L55	♦TRWO	156 - 16
OPB867N51	♦TRWO	156 - 17
OPB867N55	♦TRWO	156 - 18
OPB867P51	♦TRWO	156 - 19
OPB867P55	♦TRWO	156 - 20
OPB867T51	♦TRWO	156 - 21
OPB867T55	♦TRWO	156 - 22
OPB870L51	♦TRWO	153 - 61
OPB870L55	♦TRWO	153 - 62
OPB870N51	♦TRWO	152 - 45
OPB870N55	♦TRWO	152 - 46
OPB870P51	♦TRWO	153 - 63
OPB870P55	♦TRWO	153 - 64
OPB870T51	♦TRWO	152 - 47
OPB870T55	♦TRWO	152 - 48

TYPE No.	MFRS	Pg&Line
OPB871L51	♦TRWO	154 -102
OPB871L55	♦TRWO	154 -103
OPB871N51	♦TRWO	154 -104
OPB871N55	♦TRWO	154 -105
OPB871P51	♦TRWO	154 -106
OPB871P55	♦TRWO	154 -107
OPB871T51	♦TRWO	154 -108
OPB871T55	♦TRWO	154 -109
OPB872L51	♦TRWO	156 - 23
OPB872L55	♦TRWO	156 - 24
OPB872N51	♦TRWO	156 - 25
OPB872N55	♦TRWO	156 - 26
OPB872P51	♦TRWO	156 - 27
OPB872P55	♦TRWO	156 - 28
OPB872T51	♦TRWO	156 - 29
OPB872T55	♦TRWO	156 - 30
OPB875L51	♦TRWO	153 - 65
OPB875L55	♦TRWO	153 - 66
OPB875N51	♦TRWO	153 - 67
OPB875N55	♦TRWO	153 - 68
OPB875P51	♦TRWO	153 - 69
OPB875P55	♦TRWO	153 - 70
OPB875T51	♦TRWO	153 - 71
OPB875T55	♦TRWO	153 - 72
OPB876L51	♦TRWO	154 -110
OPB876L55	♦TRWO	155 - 1
OPB876N51	♦TRWO	155 - 2
OPB876N55	♦TRWO	155 - 3
OPB876P51	♦TRWO	155 - 4
OPB876P55	♦TRWO	155 - 5
OPB876T51	♦TRWO	155 - 6
OPB876T55	♦TRWO	155 - 7
OPB877L51	♦TRWO	156 - 31
OPB877L55	♦TRWO	156 - 32
OPB877N51	♦TRWO	156 - 33
OPB877N55	♦TRWO	156 - 34
OPB877P51	♦TRWO	156 - 35
OPB877P55	♦TRWO	156 - 36
OPB877T51	♦TRWO	156 - 37
OPB877T55	♦TRWO	156 - 38
OPB947	♦TRWO	173 - 42
OPB948	♦TRWO	173 - 43
OPB950	TRWO	232 - 38
OPB960L51	♦TRWO	150 - 28
OPB960L55	♦TRWO	150 - 29
OPB960N51	♦TRWO	150 - 30
OPB960N55	♦TRWO	150 - 31
OPB960P51	♦TRWO	150 - 32
OPB960P55	♦TRWO	150 - 33
OPB960T51	♦TRWO	150 - 34
OPB960T55	♦TRWO	150 - 35
OPB961L51	♦TRWO	150 - 36
OPB961L55	♦TRWO	150 - 37
OPB961N51	♦TRWO	150 - 38
OPB961N55	♦TRWO	150 - 39
OPB961P51	♦TRWO	150 - 40
OPB961P55	♦TRWO	150 - 41
OPB961T51	♦TRWO	150 - 42
OPB961T55	♦TRWO	150 - 43
OPB962L51	♦TRWO	150 - 44
OPB962L55	♦TRWO	150 - 45
OPB962N51	♦TRWO	150 - 46
OPB962N55	♦TRWO	150 - 47
OPB962P51	♦TRWO	150 - 48
OPB962P55	♦TRWO	150 - 49
OPB962T51	♦TRWO	150 - 50
OPB962T55	♦TRWO	150 - 51
OPB963L51	♦TRWO	150 - 52
OPB963L55	♦TRWO	150 - 53
OPB963N51	♦TRWO	150 - 54
OPB963N55	♦TRWO	150 - 55
OPB963P51	♦TRWO	150 - 56
OPB963P55	♦TRWO	150 - 57
OPB963T51	♦TRWO	150 - 58
OPB963T55	♦TRWO	150 - 59
OPB970L51	♦TRWO	150 - 60
OPB970L55	♦TRWO	150 - 61
OPB970N51	♦TRWO	150 - 62
OPB970N55	♦TRWO	150 - 63
OPB970P51	♦TRWO	150 - 64
OPB970P55	♦TRWO	150 - 65
OPB970T51	♦TRWO	150 - 66
OPB970T55	♦TRWO	150 - 67
OPB971L51	♦TRWO	150 - 68
OPB971L55	♦TRWO	150 - 69
OPB971N51	♦TRWO	150 - 70
OPB971N55	♦TRWO	150 - 71
OPB971P51	♦TRWO	150 - 72
OPB971P55	♦TRWO	150 - 73
OPB971T51	♦TRWO	150 - 74
OPB971T55	♦TRWO	150 - 75
OPB972L51	♦TRWO	150 - 76
OPB972L55	♦TRWO	150 - 77
OPB972N51	♦TRWO	150 - 78
OPB972N55	♦TRWO	150 - 79
OPB972P51	♦TRWO	150 - 80
OPB972P55	♦TRWO	150 - 81
OPB972T51	♦TRWO	150 - 82
OPB972T55	♦TRWO	150 - 83
OPB973L51	♦TRWO	150 - 84
OPB973L55	♦TRWO	150 - 85
OPB973N51	♦TRWO	150 - 86
OPB973N55	♦TRWO	150 - 87
OPB973P51	♦TRWO	150 - 88
OPB973P55	♦TRWO	150 - 89
OPB973T51	♦TRWO	150 - 90
OPB973T55	♦TRWO	150 - 91
OPC60X	♦TRWO	117 - 5
OPC60Y	♦TRWO	107 - 58
OPC116	♦TRWO	84 - 58
OPC123	♦TRWO	84 - 59
OPC124	♦TRWO	87 - 39
OPC300	♦TRWO	121 - 47
OPC600L	♦TRWO	117 - 9

Δ-Registered with JEDEC by this manufacturer

♦-Mfr's data sheet available in microfilm service

1. TYPE No. CROSS INDEX

IN TYPE NUMBER SEQUENCE

TYPE No.	MFRS	Pg&Line
OPC903	♦TRWO	107 - 59
OPC913	♦TRWO	107 - 60
OPC8012	♦TRWO	173 - 44
OPC8013	♦TRWO	173 - 69
OPC8014	♦TRWO	173 - 71
OPC8015	♦TRWO	173 - 70
OPI102	♦TRWO	164 - 72
OPI103	♦TRWO	164 - 79
OPI110	♦TRWO	168 - 2
OPI113	♦TRWO	169 -108
OPI120	♦TRWO	168 - 15
OPI123	♦TRWO	169 -109
OPI125	♦TRWO	173 - 45
OPI126	♦TRWO	173 - 46
OPI127	♦TRWO	173 - 47
OPI128	♦TRWO	173 - 48
OPI130	♦TRWO	169 - 10
OPI140	♦TRWO	164 - 70
OPI150	♦TRWO	168 - 23
OPI153	♦TRWO	170 - 2
OPI210	♦TRWO	164 - 92
OPI211	♦TRWO	164 - 96
OPI1264A	♦TRWO	168 - 4
OPI1264B	♦TRWO	168 - 5
OPI1264C	♦TRWO	168 - 6
OPI2100	♦TRWO	166 - 42
OPI2150	♦TRWO	164 -104
OPI2151	♦TRWO	165 - 1
OPI2152	♦TRWO	165 - 9
OPI2153	♦TRWO	165 - 14
OPI2154	♦TRWO	165 - 16
OPI2155	♦TRWO	165 - 18
OPI2250	♦TRWO	165 - 59
OPI2251	♦TRWO	165 - 62
OPI2252	♦TRWO	165 - 65
OPI2253	♦TRWO	165 - 73
OPI2254	♦TRWO	165 - 82
OPI2255	♦TRWO	165 - 86
OPI2500	♦TRWO	165 - 3
OPI3009	♦TRWO	171 - 67
OPI3010	♦TRWO	171 - 68
OPI3011	♦TRWO	171 - 69
OPI3012	♦TRWO	171 - 70
OPI3020	♦TRWO	171 - 75
OPI3021	♦TRWO	171 - 76
OPI3022	♦TRWO	171 - 77
OPI3023	♦TRWO	171 - 78
OPI3030	♦TRWO	171 - 71
OPI3031	♦TRWO	171 - 72
OPI3032	♦TRWO	171 - 73
OPI3033	♦TRWO	171 - 74
OPI3040	♦TRWO	171 - 79
OPI3041	♦TRWO	171 - 80
OPI3042	♦TRWO	171 - 81
OPI3043	♦TRWO	171 - 82
OPI3150	♦TRWO	169 - 17
OPI3151	♦TRWO	169 - 18
OPI3152	♦TRWO	169 - 19
OPI3153	♦TRWO	169 - 22
OPI3250	♦TRWO	169 - 37
OPI3251	♦TRWO	169 - 38
OPI3252	♦TRWO	169 - 39
OPI3253	♦TRWO	169 - 42
OPI6000	♦TRWO	165 - 10
OPI6100	♦TRWO	165 - 2
OPI7002	♦TRWO	167 - 56
OPI7010	♦TRWO	167 - 59
OPI7320	♦TRWO	169 - 76
OPI7340	♦TRWO	169 - 78
OPI8012	♦TRWO	173 - 49
OPI8013	♦TRWO	173 - 55
OPI8014	♦TRWO	173 - 50
OPI8015	♦TRWO	173 - 56
OPL5	REC	47 - 85
OPL5-1	REC	47 - 86
OPL5-2	REC	47 - 87
OPL5-3	REC	47 - 88
OPL7	REC	47 - 89
OPL7-1	REC	47 - 90
OPL7-2	REC	47 - 91
OPL7-3	REC	47 - 92
OPL17	REC	73 - 10
OPL17-1	REC	73 - 11
OPL17-2	REC	73 - 12
OPL17-3	REC	73 - 13
OPL37	REC	63 - 96
OPL37-1	REC	63 - 97
OPL37-2	REC	63 - 98
OPL37-3	REC	63 - 99
OPL47	REC	47 - 93
OPL47-1	REC	47 - 94
OPL57	REC	57 - 46
OPL57-1	REC	57 - 47
OPL57-2	REC	57 - 48
OPL57-3	REC	57 - 49
OPL71	REC	72 - 86
OPL72	REC	50 - 53
OPL73	REC	65 - 39
OPL74	REC	58 - 39
OPL209A	♦REC	79 - 71
OPL211	♦REC	79 - 72
OPL213	♦REC	79 - 76
OPL270	♦REC	50 -109
OPL271	♦REC	79 - 48
OPL273	♦REC	66 - 64
OPL309	♦REC	79 - 70
OPL311	♦REC	79 - 69
OPL312	♦REC	65 - 20
OPL409	♦REC	49 -101
OPL470	♦REC	51 -109
OPL509	REC	57 - 25
OPL550	TRW	173 - 51
	♦TRWO	

TYPE No.	MFRS	Pg&Line
OPL550OC	TRW	173 - 57
	♦TRWO	
OPL551	♦TRWO	173 - 52
OPL551OC	TRW	173 - 58
	♦TRWO	
OPL570	REC	58 - 50
OPL700	♦REC	78 -100
OPL710	♦REC	71 - 2
OPL711	♦REC	79 - 9
OPL712	♦REC	79 - 10
OPL713	♦REC	79 - 11
OPL722	♦REC	57 - 21
OPL733	♦REC	63 - 50
OPL743	♦REC	79 - 77
OPL800	♦TRWO	173 - 53
OPL800OC	♦TRWO	173 - 59
OPL801	♦TRWO	173 - 54
OPL801OC	♦TRWO	173 - 60
OPL1052	♦REC	81 - 48
OPL1209A	REC	49 - 96
OPL1211	♦REC	79 - 73
OPL1213	♦REC	65 - 22
OPL1264A	♦REC	164 - 13
	RSCB	
OPL1264B	♦REC	164 - 17
OPL1264C	♦REC	164 - 31
OPL1270	♦REC	50 -110
OPL1271	♦REC	75 - 15
OPL1273	♦REC	66 - 65
OPL1409	♦REC	79 - 78
OPL1470	♦REC	51 -110
OPS660	♦TRWO	159 - 12
OPS661	♦TRWO	159 - 16
OPS662	♦TRWO	159 - 26
OPS690	♦TRWO	159 - 4
OPS691	TRWO	159 - 13
OPS692	TRWO	159 - 17
OPS693	TRWO	159 - 23
ORL6	REC	50 - 31
ORL16	REC	76 - 10
ORL26	REC	66 - 83
ORL700L	♦REC	47 - 27
ORL710L	♦REC	79 - 14
ORL711L	♦REC	79 - 41
ORL712L	♦REC	79 - 42
ORL713L	♦REC	79 - 43
ORL722L	♦REC	58 - 48
ORL733L	♦REC	65 - 54
ORL5053	♦REC	44 - 8
ORL5054-1	♦REC	46 - 74
ORL5152	♦REC	59 - 95
ORL5153	♦REC	58 - 93
ORL5154	♦REC	58 - 94
ORL5252	♦REC	74 -104
ORL5253	♦REC	72 - 8
ORL5254	♦REC	72 - 30
ORL5352	♦REC	67 - 84
ORL5353	♦REC	66 - 5
ORL5354	♦REC	66 - 45
ORL5752	♦REC	53 - 96
ORL5753	♦REC	50 - 96
ORL5754	♦REC	51 - 89
ORP12	RSCB	130 - 42
ORP13	♦MULB	113 - 16
♦PHIN	♦RTCF	
	VALG	
ORP60	♦MULB	134 - 67
♦PHIN	RTCF	
	VALG	
ORP61	♦MULB	134 - 68
♦PHIN	RTCF	
	VALG	
ORP62	♦MULB	134 - 47
♦PHIN	♦RTCF	
	VALG	
ORP66	♦MULB	134 - 64
♦PHIN	♦RTCF	
	♦VALG	
ORP68	♦APX	134 - 48
♦MULB	♦PHIN	
♦RTCF	♦VALG	
ORP69	♦APX	134 - 7
♦MULB	♦PHIN	
RTCF	VALG	
OS521-060	♦HEI	155 - 48
OS521-060L	HEI	155 - 49
OS521-060LW	HEI	155 - 50
OS521-060W	HEI	155 - 51
OS521-200	HEI	155 - 52
OS521-200L	HEI	155 - 53
OS521-200LW	HEI	155 - 54
OS521-200W	HEI	155 - 55
OS522-060L	♦HEI	155 - 56
OS522-060LW	HEI	155 - 57
OS522-200L	HEI	155 - 58
OS522-200LW	HEI	155 - 59
OS561A060	♦HEI	157 - 46
OS561A060L	HEI	157 - 47
OS561A060LW	HEI	157 - 48
OS561A060W	HEI	157 - 49
OS561A200	HEI	157 - 50
OS561A200L	HEI	157 - 51
OS561A200LW	HEI	157 - 52
OS561A200W	HEI	157 - 53
OS562A060L	♦HEI	157 - 54
OS562A060LW	HEI	157 - 55
OS562A200L	HEI	157 - 56
OS562A200LW	♦HEI	157 - 57
OS581-060	♦HEI	156 - 92
OS581-060L	HEI	156 - 93
OS581-060LW	HEI	156 - 94
OS581-060W	HEI	156 - 95
OS581-200	HEI	156 - 96
OS581-200L	HEI	156 - 97

TYPE No.	MFRS	Pg&Line
OS581-200LW	HEI	156 - 98
OS581-200W	HEI	156 - 99
OS582-060L	♦HEI	156 -100
OS582-060LW	HEI	156 -101
OS582-200L	HEI	156 -102
OS582-200LW	HEI	156 -103
OS591S060L	♦HEI	157 - 59
OS591S060LW	HEI	157 - 60
OS591S200L	HEI	157 - 61
OS591S200LW	HEI	157 - 62
OS592S060L	♦HEI	157 - 63
OS592S060LW	HEI	157 - 64
OS592S200L	HEI	157 - 65
OS592S200LW	HEI	157 - 66
OSD1-0	♦CENB	108 - 71
OSD1-0-2	♦CENB	109 - 9
OSD1-0R	♦CENB	109 - 10
OSD1-0R2	♦CENB	109 - 11
OSD1-1	♦CENB	114 - 9
OSD1-1-2	♦CENB	114 - 26
OSD1-1R	♦CENB	114 - 27
OSD1-1R2	♦CENB	114 - 28
OSD1-2	♦CENB	108 - 6
	IPI	
OSD1-2-2	♦CENB	109 - 21
OSD1-2R	♦CENB	109 - 22
OSD1-2R2	♦CENB	109 - 23
OSD1-3	♦CENB	111 - 76
OSD1-3-2	♦CENB	112 - 24
OSD1-3HSA	♦CENB	111 - 44
OSD1-3HSA-R	♦CENB	112 - 19
OSD1-3HSA-R2	♦CENB	112 - 20
OSD1-3HSA2	♦CENB	112 - 21
OSD1-3R	♦CENB	112 - 25
OSD1-3R2	CENB	112 - 26
OSD1-4	♦CENB	111 - 66
OSD1-4-2	♦CENB	112 - 8
OSD1-4HSA1	♦CENB	112 - 2
OSD1-4HSA1-2	♦CENB	111 -100
OSD1-4HSA1R	♦CENB	111 -101
OSD1-4HSA1R2	♦CENB	112 - 1
OSD1-4HSA2	♦CENB	112 - 7
OSD1-4HSA2-2	♦CENB	112 - 4
OSD1-4HSA2R	♦CENB	112 - 5
OSD1-4HSA2R2	♦CENB	112 - 6
OSD1-4R	♦CENB	112 - 9
OSD1-4R2	♦CENB	112 - 10
OSD1-5	♦CENB	109 - 66
OSD1E	♦CENB	110 - 23
OSD3-5T	♦CENB	109 - 63
OSD3E	CENB	110 - 10
OSD5-0	♦CENB	108 - 72
OSD5-0-2	♦CENB	109 - 12
OSD5-0R	♦CENB	109 - 13
OSD5-0R2	♦CENB	109 - 8
OSD5-1	♦CENB	114 - 10
OSD5-1-2	♦CENB	114 - 29
OSD5-1R	♦CENB	114 - 30
OSD5-1R2	♦CENB	114 - 31
OSD5-2	♦CENB	108 - 7
OSD5-2-2	♦CENB	109 - 24
OSD5-2R	♦CENB	109 - 25
OSD5-2R2	♦CENB	109 - 26
OSD5-3	♦CENB	111 - 77
OSD5-3-2	♦CENB	112 - 27
OSD5-3R	♦CENB	112 - 28
OSD5-3R2	♦CENB	112 - 29
OSD5-4	♦CENB	111 - 67
OSD5-4-2	♦CENB	112 - 11
OSD5-4R	♦CENB	112 - 12
OSD5-4R2	♦CENB	112 - 13
OSD5-5	♦CENB	109 - 67
OSD5E	♦CENB	110 - 15
OSD7.5-5T	♦CENB	109 - 62
OSD15-1	CENB	114 - 25
OSD15-3T	CENB	109 - 31
OSD15-5T	♦CENB	109 - 61
OSD15E	CENB	110 - 8
OSD50-0	♦CENB	108 - 73
OSD50-0-2	♦CENB	109 - 14
OSD50-0R	♦CENB	109 - 15
OSD50-0R2	♦CENB	109 - 16
OSD50-1	♦CENB	114 - 11
OSD50-1-2	♦CENB	114 - 32
OSD50-1R	♦CENB	114 - 33
OSD50-1R2	♦CENB	114 - 34
OSD50-2	♦CENB	108 - 8
OSD50-2-2	♦CENB	109 - 27
OSD50-2R	♦CENB	109 - 28
OSD50-2R2	♦CENB	109 - 29
OSD50-3	♦CENB	111 - 78
OSD50-3-2	♦CENB	112 - 30
OSD50-3R	♦CENB	112 - 31
OSD50-3R2	♦CENB	112 - 32
OSD50-4	♦CENB	111 - 68
OSD50-4-2	♦CENB	112 - 14
OSD50-4R	♦CENB	112 - 15
OSD50-4R2	♦CENB	112 - 16
OSD50-5	♦CENB	109 - 70
OSD60-1	CENB	114 - 24
OSD60-3T	CENB	104 - 33
OSD60-4T	CENB	112 - 3
OSD60-5T	♦CENB	109 - 64
OSD60E	CENB	110 - 9
OSD100-0	♦CENB	108 - 74
OSD100-1	♦CENB	114 - 12
OSD100-2	♦CENB	108 - 9
OSD100-3	♦CENB	111 - 79
OSD100-4	♦CENB	111 - 69
OSD100-5	♦CENB	109 - 71
OSD100-5T	♦CENB	109 - 65
OSD100E	♦CENB	110 - 24
OSD200-0	♦CENB	109 - 17
OSD200-1	♦CENB	114 - 35

TYPE No.	MFRS	Pg&Line
OSD200-2	♦CENB	109 - 30
OSD200-3	♦CENB	112 - 33
OSD200-4	♦CENB	112 - 17
OSD200-5T	CENB	109 - 68
OSD200E	CENB	109 - 19
OSD300-0	♦CENB	109 - 18
OSD300-1	♦CENB	109 - 7
OSD300-2	♦CENB	112 - 22
OSD300-3	♦CENB	112 - 34
OSD300-4	♦CENB	112 - 18
OSD300-5T	CENB	109 - 69
OSD300E	CENB	109 - 20
OSI1JHSA	♦CENB	125 - 10
OSI1KHSA	♦CENB	125 - 11
OSI1LHSA	♦CENB	125 - 12
OSI5E	♦CENB	124 - 48
OSI5J	♦CENB	125 - 17
OSI5K	♦CENB	125 - 18
OSI5L	♦CENB	125 - 19
OSL1	♦REC	47 - 57
OSL1S	♦REC	47 - 56
OSL5	♦REC	44 - 35
OSL11	♦REC	73 - 9
OSL11S	♦REC	73 - 8
OSL31	♦REC	63 - 95
OSL31S	♦REC	63 - 94
OSL50	♦REC	42 - 24
OSL1048	REC	82 - 79
OSL1048S	REC	82 - 80
OT106A	OTI	125 - 81
OT150D	♦OTI	124 - 19
OT151D	♦OTI	124 - 20
OT160D	♦OTI	124 - 21
OT161D	♦OTI	124 - 22
OT400-1	♦OTI	117 - 45
OT400-1L	♦OTI	117 - 46
OT400-6	♦OTI	119 - 33
OT400-6L	♦OTI	119 - 34
OT906	OTI	125 - 82
OT910S	OTI	149 - 8
OT911	OTI	149 - 7
OT911S	OTI	149 - 9
OT3031A	♦OTI	89 - 24
OTC3MI52	♦OPE	111 - 97
OTC3MI52T	♦OPE	111 - 98
OTC3MI52TC	♦OPE	111 - 99
OTC11-51	♦OPE	112 -106
OTC11-51T	♦OPE	112 -107
OTC11-51TC	♦OPE	112 -108
OTC11-52	♦OPE	112 - 67
OTC11-52T	♦OPE	112 - 68
OTC11-52TC	♦OPE	112 - 69
OTC11-53	♦OPE	112 - 53
OTC11-53T	♦OPE	112 - 54
OTC11-53TC	♦OPE	112 - 55
OTC11-81	♦OPE	112 -109
OTC11-81T	♦OPE	112 -110
OTC11-81TC	♦OPE	113 - 1
OTC11-82	♦OPE	112 - 78
OTC11-82T	♦OPE	112 - 79
OTC11-82TC	♦OPE	112 - 80
OTC11-83	♦OPE	112 - 57
OTC11-83T	♦OPE	112 - 58
OTC11-83TC	♦OPE	112 - 59
OTC11-84	♦OPE	112 - 44
OTC11-84T	♦OPE	112 - 45
OTC11-84TC	♦OPE	112 - 46
OTC12-51	♦OPE	113 - 5
OTC12-51T	♦OPE	113 - 6
OTC12-51TC	♦OPE	113 - 7
OTC12-52	♦OPE	112 - 96
OTC12-52T	♦OPE	112 - 97
OTC12-52TC	♦OPE	112 - 98
OTC12-53	♦OPE	112 - 70
OTC12-53T	♦OPE	112 - 71
OTC12-53TC	♦OPE	112 - 72
OTC12-81	♦OPE	113 - 8
OTC12-81T	♦OPE	113 - 9
OTC12-81TC	♦OPE	113 - 10
OTC12-82	♦OPE	112 - 99
OTC12-82T	♦OPE	112 -100
OTC12-82TC	♦OPE	112 -101
OTC12-83	♦OPE	112 - 73
OTC12-83T	♦OPE	112 - 74
OTC12-83TC	♦OPE	112 - 75
OTC12-84	♦OPE	112 - 60
OTC12-84T	♦OPE	112 - 61
OTC12-84TC	♦OPE	112 - 62
OTC12S81T	♦OPE	113 - 14
OTC12S81TC	♦OPE	113 - 15
OTC12S82T	♦OPE	113 - 2
OTC12S82TC	♦OPE	113 - 3
OTC12S83T	♦OPE	112 - 94
OTC12S83TC	♦OPE	112 - 95
OTC12S84T	♦OPE	112 - 76
OTC12S84TC	♦OPE	112 - 77
OTC12S85T	♦OPE	112 - 63
OTC12S85TC	♦OPE	112 - 64
OTC21-51	♦OPE	113 - 83
OTC21-51T	♦OPE	113 - 84
OTC21-51TC	♦OPE	113 - 85
OTC21-52	♦OPE	113 - 53
OTC21-52T	♦OPE	113 - 54
OTC21-52TC	♦OPE	113 - 55
OTC21-53	♦OPE	113 - 32
OTC21-53T	♦OPE	113 - 33
OTC21-53TC	♦OPE	113 - 34
OTC21-81	♦OPE	113 - 86
OTC21-81T	♦OPE	113 - 87
OTC21-81TC	♦OPE	113 - 88
OTC21-82	♦OPE	113 - 56
OTC21-82T	♦OPE	113 - 57
OTC21-82TC	♦OPE	113 - 58
OTC21-83	♦OPE	113 - 35

TYPE No.	MFRS	Pg&Line
OTC21-83T	♦OPE	113 - 36
OTC21-83TC	♦OPE	113 - 37
OTC21-84	♦OPE	113 - 27
OTC21-84T	♦OPE	113 - 28
OTC21-84TC	♦OPE	113 - 29
OTC22-51	♦OPE	113 - 91
OTC22-51T	♦OPE	113 - 92
OTC22-51TC	♦OPE	113 - 93
OTC22-52	♦OPE	113 - 73
OTC22-52T	♦OPE	113 - 74
OTC22-52TC	♦OPE	113 - 75
OTC22-53	♦OPE	113 - 59
OTC22-53T	♦OPE	113 - 60
OTC22-53TC	♦OPE	113 - 61
OTC22-81	♦OPE	113 - 94
OTC22-81T	♦OPE	113 - 95
OTC22-81TC	♦OPE	113 - 96
OTC22-82	♦OPE	113 - 76
OTC22-82T	♦OPE	113 - 77
OTC22-82TC	♦OPE	113 - 78
OTC22-83	♦OPE	113 - 62
OTC22-83T	♦OPE	113 - 63
OTC22-83TC	♦OPE	113 - 64
OTC22-84	♦OPE	113 - 38
OTC22-84T	♦OPE	113 - 39
OTC22-84TC	♦OPE	113 - 40
OTC22S81T	♦OPE	113 - 97
OTC22S81TC	♦OPE	113 - 98
OTC22S82T	♦OPE	113 - 79
OTC22S82TC	♦OPE	113 - 80
OTC22S83T	♦OPE	113 - 65
OTC22S83TC	♦OPE	113 - 66
OTC22S84T	♦OPE	113 - 43
OTC22S84TC	♦OPE	113 - 44
OTC22S85T	♦OPE	113 - 41
OTC22S85TC	♦OPE	113 - 42
OTL302	♦OTI	85 - 13
OTL302L	OTI	85 - 14
OTL310D	♦OTI	87 - 2
OTR120SDN	OTI	233 - 44
OTR120SDP	OTI	233 - 45
OTR121SCN	OTI	160 - 59
OTR121SCP	OTI	160 - 60
OTR121SDN	OTI	233 - 46
OTR121SDP	OTI	233 - 47
OTR121SLN	OTI	160 - 41
OTR121SLP	OTI	160 - 42
OTR125SCN	♦OTI	159 - 42
OTR125SCP	♦OTI	159 - 43
OTR125SLN	♦OTI	159 - 44
OTR125SLP	♦OTI	159 - 45
OTR630	♦OTI	159 - 81
OTR631	♦OTI	159 - 58
OTR640	♦OTI	159 - 93
OTR641	♦OTI	159 - 94
OTR650	♦OTI	159 - 95
OTS41CN	OTI	173 - 77
OTS41CP	OTI	173 - 78
OTS41LN	OTI	173 - 4
OTS41LP	OTI	173 - 5
OTS42CN	OTI	173 - 79
OTS42CP	OTI	173 - 80
OTS42LN	OTI	173 - 6
OTS42LP	OTI	173 - 7
OTS81CN	OTI	173 - 92
OTS81CP	OTI	173 - 93
OTS81LN	OTI	173 - 14
OTS81LP	OTI	173 - 15
OTS82CN	OTI	173 - 94
OTS82CP	OTI	173 - 95
OTS82LN	OTI	173 - 16
OTS82LP	OTI	173 - 17
OTS250	♦OTI	150 - 92
OTS253	♦OTI	173 - 23
OTS254(A)	♦OTI	158 - 50
OTS255	♦OTI	150 - 93
OTS256	♦OTI	155 - 25
OTS257(A)	♦OTI	158 - 40
OTS258(A)	♦OTI	158 - 41
OTS259	♦OTI	158 - 42
OTS260	♦OTI	158 - 49
OTS263	♦OTI	158 - 43
OTS264	♦OTI	158 - 44
OTS265	♦OTI	150 - 94
OTS267	♦OTI	158 - 45
OTS268	♦OTI	158 - 46
OTS269	♦OTI	158 - 47
OTS270	♦OTI	150 - 95
OTS271	♦OTI	150 - 96
OTS275	♦OTI	150 - 97
OTS281	♦OTI	150 - 98
P1-11	♦MOL	106 - 24
P1-11H	♦MOL	106 - 17
P1-12	♦MOL	106 - 22
P1-12H	♦MOL	106 - 18
P1-13	♦MOL	106 - 23
P1-13H	♦MOL	106 - 19
P1-15	♦MOL	106 - 20
P1-15H	♦MOL	106 - 21
P1-31	♦MOL	124 - 65
P1-32	♦MOL	124 - 66
P1-33	♦MOL	124 - 67
P1-35	♦MOL	124 - 68
P1-41	♦MOL	124 - 69
P1-42	♦MOL	124 - 70
P1-43	♦MOL	124 - 71
P1-45	♦MOL	124 - 72
P1-51	♦MOL	127 - 1
P1-52	♦MOL	127 - 2
P1-53	♦MOL	127 - 3
P1-55	♦MOL	127 - 4
P1-61	♦MOL	127 - 5
P1-62	♦MOL	127 - 6
P1-63	♦MOL	127 - 7

Δ-Registered with JEDEC by this manufacturer

♦-Mfr's data sheet available in microfilm service

1. TYPE No. CROSS INDEX

IN TYPE NUMBER SEQUENCE

TYPE No.	MFRS	Pg&Line
P1-65	♦MOL	127 - 8
P1-71	♦MOL	127 - 9
P1-72	♦MOL	127 - 10
P1-73	♦MOL	127 - 11
P1-75	♦MOL	127 - 12
P102	SIX	115 - 4
P140	MAI	232 - 39
P201D5R	♦HPKJ	135 - 21
P201D7R	♦HPKJ	134 - 82
P201D	♦HPKJ	134 - 66
P201E	♦HPKJ	133 - 40
P240	MAI	232 - 40
P320	♦HPKJ	134 - 99
P380	♦HPKJ	133 - 41
P380-5R	♦HPKJ	134 - 26
P380-7R	♦HPKJ	133 - 42
P401	♦HPKJ	134 - 46
P467	♦HPKJ	133 -103
P534	♦HPKJ	131 - 73
P552	♦HPKJ	131 - 35
P559	♦HPKJ	132 - 81
P577-04	♦HPKJ	133 - 60
P586	♦HPKJ	135 - 53
P587	♦HPKJ	135 - 14
P653G35-584	♦HPKJ	161 - 63
P653G50-584	♦HPKJ	161 - 81
P653G50-6	♦HPKJ	161 - 75
P722-5R	♦HPKJ	133 - 50
P722-7R	♦HPKJ	132 - 45
P722-10R	♦HPKJ	134 - 28
P819	♦HPKJ	130 - 9
P873-13	♦HPKJ	163 - 54
P873-25	♦HPKJ	163 - 51
P873G35-201B	♦HPKJ	163 - 52
P873G35-380	♦HPKJ	163 - 48
P873G35-552	♦HPKJ	163 - 47
P873G35-687	♦HPKJ	163 - 49
P873G35-911	♦HPKJ	163 - 50
P883	♦HPKJ	136 - 24
P884	♦HPKJ	136 - 25
P903	♦HPKJ	130 - 13
P930	♦HPKJ	133 -100
P930-05	♦HPKJ	133 -101
P930-06	♦HPKJ	133 -102
P1022	♦HPKJ	150 - 99
P1023	♦HPKJ	133 -107
P1026	♦HPKJ	130 - 10
P1063-02	♦HPKJ	166 -107
P1082-06	♦HPKJ	134 - 6
P1095-06	♦HPKJ	134 - 27
P1096-06	♦HPKJ	132 - 78
P1109	♦HPKJ	136 - 6
P1144	♦HPKJ	150 -100
P1195	♦HPKJ	135 - 28
P1201(2)	♦HPKJ	134 - 96
P1201-01	♦HPKJ	134 - 97
P1501	♦HPKJ	162 - 67
P1501-01	♦HPKJ	162 - 72
P1601(A)	♦MULB	106 - 72
♦PHIN	♦RTCF	
	♦VALG	
P1603(A)	♦MULB	106 - 73
♦PHIN	♦RTCF	
	♦VALG	
P1604(A)	♦MULB	106 - 74
♦PHIN	♦RTCF	
	♦VALG	
P1645(A)	♦APX	125 - 42
P1646(A)	♦APX	125 - 43
P1667(A)	♦APX	125 - 27
P1692	♦MULB	158 - 66
P1760	♦HPKJ	163 - 37
P1760-04	♦HPKJ	163 - 38
P1908	♦HPKJ	130 - 11
P1908-01	♦HPKJ	130 - 12
P2009	♦HPKJ	159 - 56
P2038	♦HPKJ	130 - 14
P2038-01	♦HPKJ	130 - 15
P2051	♦HPKJ	130 - 16
P2058	♦HPKJ	160 - 24
P2067	♦HPKJ	166 -102
P2101(1A)	♦APX	112 - 23
P2105(1A)	♦PHIN	106 - 57
P2105(A)	PHIN	106 - 27
P2122(A)	♦APX	112 - 36
P2163	♦HPKJ	166 -108
P4009	NECJ	169 - 5
P5580-5	♦CRS	213 - 67
P5580-6	♦CRS	213 - 68
P5580G	♦CRS	213 - 69
P5580M	CRS	213 - 70
P5580X	CRS	213 - 71
P17103	♦SAM	159 - 46
P30011	♦SAM	115 - 18
P30013	♦SAM	115 - 19
P31011	♦SAM	115 - 36
P31013	♦SAM	115 - 37
P32011	♦SAM	115 - 21
P32013	♦SAM	115 - 22
P33001	♦SAM	158 - 80
P33014	♦SAM	158 - 81
P33101	♦SAM	158 - 82
P34021	♦SAM	115 - 38
P34023	♦SAM	115 - 39
P34024	♦SAM	159 - 32
P56001	♦SAM	115 - 23
P56101	♦SAM	115 - 24
P56201	♦SAM	115 - 25
PBSATO1-10A	SBR	101 - 39
PBSATO2-10A	SBR	101 - 24
PBSATO4-10A	SBR	101 - 19
PBSATO10-10A	SBR	101 - 3
PBSATO-.5-10A	SBR	99 - 59
PBSEATO1-10A	SBR	100 - 19
PBSEATO2-10A	SBR	100 - 10
PBSEATO4-10A	SBR	100 - 5
PBSEATO10-10A	SBR	100 - 4
PBSEITO1-40A	SBR	102 - 59
PBSEITO1-40AS	SBR	102 - 60
PBSEITO1-40742		100 - 35
	SBR	
PBSEITO1-44782		100 - 36
	SBR	
PBSEITO1-520A	SBR	100 - 37
PBSEITO1-520AS		100 - 38
	SBR	
PBSEITO1-60A	SBR	102 - 61
PBSEITO1-60AS	SBR	102 - 62
PBSEITO2-40A	SBR	102 - 63
PBSEITO2-40AS	SBR	102 - 64
PBSEITO2-40742		100 - 24
	SBR	
PBSEITO2-44782		100 - 25
	SBR	
PBSEITO2-520A	SBR	100 - 26
PBSEITO2-520AS		100 - 27
	SBR	
PBSEITO2-60A	SBR	102 - 65
PBSEITO2-60AS	SBR	102 - 66
PBSEITO4-40742		100 - 11
	SBR	
PBSEITO4-44782		100 - 12
	SBR	
PBSEITO4-520A	SBR	100 - 13
PBSEITO4-520AS		100 - 14
	SBR	
PBSEITO10-40742		100 - 6
	SBR	
PBSEITO10-44782		100 - 7
	SBR	
PBSEITO10-520A		100 - 8
	SBR	
PBSEITO10-520AS		100 - 9
	SBR	
PBSEITO-.5-40A		103 - 1
	SBR	
PBSEITO-.5-40AS		103 - 2
	SBR	
PBSEITO-.5-520A		103 - 3
	SBR	
PBSEITO-.5-520AS		103 - 4
	SBR	
PBSEITO-.5-60A		103 - 5
	SBR	
PBSEITO-.5-60AS		103 - 6
	SBR	
PBSELTO1-40742		100 - 59
	SBR	
PBSELTO1-44782		100 - 60
	SBR	
PBSELTO1-520A	SBR	100 - 61
PBSELTO1-520AS		100 - 62
	SBR	
PBSELTO2-40742		100 - 49
	SBR	
PBSELTO2-44782		100 - 50
	SBR	
PBSELTO2-520A	SBR	100 - 51
PBSELTO2-520AS		100 - 52
	SBR	
PBSELTO4-40742		100 - 28
	SBR	
PBSELTO4-44782		100 - 29
	SBR	
PBSELTO4-520A	SBR	100 - 39
PBSELTO4-520AS		100 - 30
	SBR	
PBSELTO10-40742		100 - 15
	SBR	
PBSELTO10-44782		100 - 16
	SBR	
PBSELTO10-520A		100 - 17
	SBR	
PBSELTO10-520AS		100 - 18
	SBR	
PBSITO1-40A	SBR	103 - 11
PBSITO1-40AS	SBR	103 - 12
PBSITO1-60A	SBR	103 - 13
PBSITO1-60AS	SBR	103 - 14
PBSITO1-520A	SBR	101 - 54
PBSITO1-520AS	SBR	101 - 55
PBSITO1-40742	SBR	101 - 56
PBSITO1-44782	SBR	101 - 57
PBSITO2-40A	SBR	99 - 80
PBSITO2-40AS	SBR	99 - 81
PBSITO2-60A	SBR	99 - 82
PBSITO2-60AS	SBR	99 - 83
PBSITO2-520A	SBR	101 - 40
PBSITO2-520AS	SBR	101 - 41
PBSITO2-40742	SBR	101 - 42
PBSITO2-44782	SBR	101 - 43
PBSITO4-520A	SBR	101 - 25
PBSITO4-520AS	SBR	101 - 26
PBSITO4-40742	SBR	101 - 27
PBSITO4-44782	SBR	101 - 28
PBSITO10-520A	SBR	101 - 15
PBSITO10-520AS		101 - 16
	SBR	
PBSITO10-40742		101 - 17
	SBR	
PBSITO10-44782		101 - 18
	SBR	
PBSITO-.5-40A	SBR	99 - 84
PBSITO-.5-40AS		99 - 85
	SBR	
PBSITO-.5-40742		99 - 86
	SBR	
PBSITO-.5-44782		99 - 87
	SBR	
PBSITO-.5-520A		99 - 88
	SBR	
PBSITO-.5-520AS		100 - 1
	SBR	
PBSITO-.5-60A	SBR	100 - 2
PBSITO-.5-60AS		100 - 3
	SBR	
PBSLTO1-40A	SBR	103 - 7
PBSLTO1-40AS	SBR	103 - 8
PBSLTO1-60A	SBR	103 - 9
PBSLTO1-60AS	SBR	103 - 10
PBSLTO1-520A	SBR	101 - 11
PBSLTO1-520AS	SBR	101 - 12
PBSLTO1-40742	SBR	101 - 13
PBSLTO1-44782	SBR	101 - 14
PBSLTO2-40A	SBR	99 - 60
PBSLTO2-40AS	SBR	99 - 61
PBSLTO2-60A	SBR	99 - 62
PBSLTO2-60AS	SBR	99 - 63
PBSLTO2-520A	SBR	101 - 4
PBSLTO2-520AS	SBR	101 - 5
PBSLTO2-40742	SBR	101 - 6
PBSLTO2-44782	SBR	101 - 7
PBSLTO4-520A	SBR	100 - 53
PBSLTO4-520AS	SBR	100 - 54
PBSLTO4-40742	SBR	100 - 55
PBSLTO4-44782	SBR	100 - 56
PBSLTO10-520A	SBR	100 - 40
PBSLTO10-520AS		100 - 41
	SBR	
PBSLTO10-40742		100 - 42
	SBR	
PBSLTO10-44782		100 - 43
	SBR	
PBSLTO-.5-40A	SBR	99 - 64
PBSLTO-.5-40AS		99 - 65
	SBR	
PBSLTO-.5-40742		99 - 66
	SBR	
PBSLTO-.5-44782		99 - 67
	SBR	
PBSLTO-.5-520A		99 - 68
	SBR	
PBSLTO-.5-520AS		99 - 69
	SBR	
PBSLTO-.5-60A	SBR	99 - 70
PBSLTO-.5-60AS		99 - 71
	SBR	
PC17T1	♦KODC	165 - 50
PC17T2	♦KODC	165 - 54
PC17T4	♦KODC	165 - 57
PC508(2)	QTC	166 - 74
	♦SRPJ	
PC510(2)	SRPJ	166 - 99
PC515(2)	♦SRPJ	169 - 28
PC525(2)	SRPJ	169 - 20
PC613(2)	SRPJ	165 - 47
PC614(2)	SRPJ	165 - 48
PC617(2)	SRPJ	165 - 49
PC619(2)	SRPJ	165 - 34
PC627(2)	SRPJ	165 - 53
PC637	SRPJ	165 - 56
PC713	SRPJ	166 - 87
PC713U	SRPJ	166 -109
PC714(2)	SRPJ	166 - 88
PC714U	SRPJ	166 -110
PC715(2)	SRPJ	169 - 64
PC715U	SRPJ	169 - 70
PC716(2)	SRPJ	169 - 65
PC716U	SRPJ	169 - 71
PC723(2)	♦SRPJ	167 - 1
PC723U	SRPJ	167 - 2
PC817	SRPJ	167 - 3
PC818	SRPJ	166 -100
PC827	♦SRPJ	167 - 5
PC829	♦SRPJ	167 - 6
PC837	SRPJ	167 - 9
PC847	SRPJ	167 - 12
PC900	♦SRPJ	173 - 73
PCID100	PCI	204 - 8
PCID110	PCI	204 - 9
PCID120	PCI	204 - 15
PCID122	PCI	204 - 14
PCID131	PCI	204 - 5
PCID162	PCI	204 - 6
PCID177	PCI	204 - 13
PCID200	PCI	204 - 16
PCID300	PCI	204 - 20
PCID302	PCI	204 - 21
PCID305	PCI	204 - 19
PCID401	PCI	204 - 10
PCID404	PCI	204 - 11
PCID501	PCI	204 - 12
PCIM17D2	♦PCI	211 - 88
PCIM17D2M	♦PCI	209 - 75
PCIM17D2S	♦PCI	207 - 98
PCIM17D3	♦PCI	211 - 89
PCIM17D3M	♦PCI	209 - 76
PCIM17D3S	♦PCI	207 - 99
PCIM17D4	♦PCI	207 -100
PCIM17D5	♦PCI	207 -101
PCIM17D6	♦PCI	211 - 90
PCIM17D6M	♦PCI	209 - 91
PCIM174M	♦PCI	209 - 90
PCIM176	♦PCI	212 - 87
PCIM183	♦PCI	212 - 66
PCIM200	♦PCI	220 - 90
PCIM201	♦PCI	220 - 91
PCIM202	♦PCI	221 - 19
PCIM205	♦PCI	222 - 26
PCIM206	♦PCI	220 - 83
PCIM300	♦PCI	207 - 73
PCIM500(A)	♦PCI	223 - 3
PD41PI	SRPJ	103 - 69
PD43PI	SRPJ	103 - 54
PD46PI	SRPJ	103 - 70
PD50PI	♦SRPJ	103 - 88
PD80PI	♦SRPJ	103 - 89
PD101(2)	♦STAJ	122 - 30
PD201(1)	♦STAJ	122 - 7
PD302(1)	♦STAJ	122 - 42
PD0391	QTC	128 - 49
PD401(1)	♦STAJ	121 -100
PD502(1)	♦STAJ	121 - 99
PD503(1)	♦STAJ	121 -101
PD504	♦STAJ	122 - 43
PD1002(1)	♦MITA	99 - 11
	MITJ	
PD1005	♦MITA	99 - 12
	MITJ	
PD1165	SIEG	202 - 7
PD1167	SIEG	202 - 8
PD1302	♦MITA	99 - 13
PD1305	♦MITA	99 - 14
	MITJ	
PD2101	♦MITA	104 - 67
PD2435(A)	♦SIEG	202 - 95
	♦SIEX	
PD2437(A)	♦SIEG	202 - 96
	♦SIEX	
PD2816	♦SIEG	201 -102
	♦SIEX	
PD3435(A)	♦SIEG	202 -102
	♦SIEX	
PD3437(A)	♦SIEG	202 -103
	♦SIEX	
PD7002	♦MITA	108 - 4
PD7003	♦MITA	108 - 95
PD7004	♦MITA	108 - 97
PD7005	♦MITA	108 - 91
PD7006	♦MITA	108 - 93
PD7935	♦MITA	108 - 92
PD7936	♦MITA	108 - 94
PG2BC	♦KODC	159 - 54
PG7L2	♦KODC	159 - 98
PG7L3	♦KODC	159 - 99
PG2651KY	♦STAJ	74 - 2
PG3665S	♦STAJ	73 -105
PG3668S	♦STAJ	78 - 18
PG5562X	STAJ	74 - 96
PH101	♦NECE	121 - 98
	♦NECJ	
PH102	♦NECE	115 - 60
	♦NECJ	
PH103	♦NECE	121 - 69
	♦NECJ	
PH104	♦NECE	115 - 56
	♦NECJ	
PH105	♦NECE	116 - 30
PH106	♦NECE	115 - 73
	NECJ	
PH107	NECJ	122 - 21
PH108(2)	♦NECE	115 -109
PH201A	♦NECE	110 - 7
PH302	♦NECE	105 - 93
	♦NECJ	
PH302B	♦NECE	105 - 94
	♦NECJ	
PH305	♦NECE	105 - 95
PH309	NECE	103 - 95
	♦NECJ	
PIC0101	♦KODC	125 - 63
PIN2D-I	♦UDT	105 - 15
PIN2P-I	♦UDT	104 - 83
PIN3D	♦UDT	104 - 51
PIN3DP	♦UDT	104 - 44
PIN5D	♦UDT	104 - 52
PIN5DP	♦UDT	104 - 45
PIN5DP-SB	♦UDT	104 - 29
PIN6D	♦UDT	104 - 53
PIN6DP	♦UDT	104 - 46
PIN6LC	♦UDT	104 - 37
PIN8LC	♦UDT	104 - 39
PIN10	♦UDT	104 - 38
PIN10AP	♦UDT	103 - 93
PIN10D	♦UDT	104 - 55
PIN10DF	♦UDT	104 - 18
PIN10DP	♦UDT	104 - 47
PIN10DP-SB	♦UDT	104 - 30
PIN10DPISB	♦UDT	104 - 31
PIN10RP	♦UDT	103 - 94
PIN020A	♦UDT	104 - 74
PIN020B	♦UDT	104 - 76
PIN25	♦UDT	104 - 40
PIN040A	♦UDT	104 - 75
PIN040B	♦UDT	104 - 78
PIN125DPL	♦UDT	104 - 48
PIN220DP	♦UDT	104 - 54
PIN-L4	♦UDT	104 - 41
PIN-L9	♦UDT	104 - 42
PINLSC4	♦UDT	236 - 13
PINLSC5D	♦UDT	105 - 67
PINLSC30D	♦UDT	105 - 80
PINSC4D	♦UDT	105 - 75
PINSC10	♦UDT	236 - 14
PINSC10D	♦UDT	105 - 81
PINSC25	♦UDT	236 - 15
PINSC50	♦UDT	236 - 16
PINSPOT2D	♦UDT	236 - 17
PINSPOT4D	♦UDT	232 - 66
PINSPOT9D	♦UDT	232 - 67
PIR140	MAI	232 - 41
PIX105(A)	♦MER	231 - 64
PIX109(A)	♦MER	231 - 65
PIX115(A)	♦MER	231 - 66
PL2H33	♦SXI	163 - 23
PL2H33-1	SXI	163 - 24
PL2H36	♦SXI	163 - 29
PL2H36-1	SXI	163 - 30
PL5S33	♦SXI	163 - 28
PL5S33-1	SXI	163 - 27
PL5S36	♦SXI	163 - 40
PL5S36-1	SXI	163 - 41
PL1033(1)	♦SXI	163 - 25
PL1033-1	SXI	163 - 26
PL1036	♦SXI	163 - 31
PL1036-1	SXI	163 - 32
PLF5S380	SXI	162 - 31
PLF5S387	SXI	162 - 86
PLM5S310	♦SXI	163 - 8
PLM5S317	♦SXI	163 - 22
PLM5S387	SXI	163 - 53
PLS5S380	♦SXI	163 - 60
PLS5S387	♦SXI	163 - 66
PLT2H384	♦SXI	163 - 57
PLT2H387	♦SXI	163 - 59
PLT10384	♦SXI	163 - 56
PLT10387	♦SXI	163 - 58
PMO2	REC	175 - 6
PN1	♦QTC	108 - 10
PN2-17	KODC	147 - 83
PN2-27Y	KODC	147 - 88
PN2-29	♦KODC	147 - 87
PN2-113	♦KODC	147 - 74
PN2-254	♦KODC	147 - 85
PN3	♦QTC	108 - 11
PN4-9R	♦KODC	147 - 81
PN4-12R	♦KODC	147 - 79
PN4-17	KODC	147 - 84
PN4-27LD	♦KODC	103 - 30
PN4-46LD	♦KODC	103 - 31
PN4-125LD	♦KODC	103 - 32
PN4-150LD	♦KODC	103 - 33
PN4-254LD	♦KODC	103 - 34
PN4RA	♦KODC	147 - 82
PN5	♦QTC	108 - 12
PN6-10R	♦KODC	147 - 80
PN9-254	♦KODC	147 - 86
PN9-254A	♦KODC	129 - 40
PN9-254RC	♦KODC	129 - 41
PN11-119	KODC	147 - 75
PN12-635	♦KODC	129 - 52
PN20	♦QTC	108 - 13
PN20-1W	♦KODC	147 - 76
PN24-1	♦KODC	147 - 77
PN35-1	♦KODC	147 - 78
PN100B	♦QTC	108 - 14
PN100P	♦QTC	108 - 15
PN101	MATJ	115 - 40
PN101F	MATJ	116 - 8
PN102	MATJ	115 - 41
PN102F	MATJ	116 - 9
PN103	MATJ	115 - 50
PN106	MATJ	116 - 10
PN107(1)	MATJ	120 - 4
PN107F	MATJ	116 - 25
PN108(1)	MATJ	120 - 5
PN108CL	MATJ	119 - 41
PN108F	MATJ	116 - 75
PN109CL	MATJ	118 - 40
PN109F	MATJ	120 - 30
PN109L	MATJ	118 - 85
PN110	MATJ	118 - 41
PN111W	MATJ	120 - 36
PN112	MATJ	116 - 85
PN115	MATJ	120 - 34
PN120S	MATJ	118 - 81
PN121S	MATJ	115 - 85
PN123S	MATJ	116 - 26
PN126S	MATJ	117 - 71
PN127	MATJ	120 - 32
PN147	MATJ	120 - 35
PN150	MATJ	115 - 26
PN154	♦MATJ	117 - 70
PN158	MATJ	115 -103
PN168	MATJ	117 - 11
PN202S	MATJ	121 - 25
PN205	MATJ	115 -101
PN207	MATJ	121 - 35
PN208	MATJ	121 - 50
PN268	MATJ	121 - 24
PN300	MATJ	103 - 55
PN300F	MATJ	103 - 56
PN302E	♦MATJ	104 - 4
PN302H	♦MATJ	104 - 9
PN303	MATJ	103 - 78
PN304K	♦MATJ	128 - 25
PN307	MATJ	103 - 79
PN308	MATJ	107 - 39
PN311	MATJ	104 - 7
PN311H	MATJ	103 - 82
PN312C	MATJ	104 - 8
PN312D	MATJ	103 - 84
PN312E	MATJ	104 - 6
PN313	MATJ	104 - 12
PN313B	MATJ	104 - 14
PN314K	♦MATJ	128 - 26
PN316C	MATJ	103 - 96
PN316N	MATJ	106 - 8
PN321C	MATJ	104 - 10
PN322D	MATJ	104 - 3
PN323	♦MATJ	104 - 17
PN323B	♦MATJ	104 - 15
PN324E	MATJ	104 - 13
PN330CL	MATJ	103 -100
PN330F	♦MATJ	105 - 48
PN332F	♦MATJ	105 - 47
PN334	♦MATJ	105 - 16
PN335(2)	♦MATJ	105 - 49
PN11596	♦OPE	233 - 48

Δ-Registered with JEDEC by this manufacturer

♦-Mfr's data sheet available in microfilm service

1. TYPE No. CROSS INDEX

IN TYPE NUMBER SEQUENCE

TYPE No.	MFRS	Pg&Line
PN71001	♦MER	173 - 36
PN71003	♦MER	173 - 37
PO40(A)	PHIN	166 - 19
PO44	PHIN	166 - 20
PO44A(A)	PHIN	166 - 21
PP900	♦OTI	149 - 5
PR2651K	♦STAJ	41 - 80
PR3665S	♦STAJ	42 - 46
PR3668S	♦STAJ	52 - 3
PR5562X	STAJ	42 - 47
PS100-10(1)	♦QTC	108 - 16
PS100-30	♦QTC	108 - 17
PS100-50	♦QTC	108 - 18
PS101	♦STAJ	119 - 28
PS200-2	♦QTC	232 - 68
PS200-4	♦QTC	232 - 69
PS201	♦STAJ	118 - 75
PS302	♦STAJ	119 - 12
PS401	♦STAJ	118 - 53
PS502	♦STAJ	120 - 2
PS503	♦STAJ	118 -101
PS504	♦STAJ	119 - 84
PS1001	♦NECJ	164 - 71
PS2001B	♦NECJ	165 - 69
PS2002B	♦NECE	169 - 44
	♦NECJ	
PS2003B	♦NECJ	165 - 66
PS2004B	♦NECE	169 - 33
	♦NECJ	
PS2005B	♦NECE	165 - 63
	♦NECJ	
PS2006-1	♦NECE	173 -109
PS2006B	♦NECE	173 -108
	♦NECJ	
PS2007B	♦NECE	173 - 27
	♦NECJ	
PS2008B	♦NECE	165 - 70
	♦NECJ	
PS2009B	♦NECE	165 - 67
	♦NECJ	
PS2010	♦NECE	165 - 44
	♦NECJ	
PS2011	♦NECJ	166 - 35
PS2012	♦NECE	166 - 44
	♦NECJ	
PS2012(1)	♦NECE	166 - 45
	♦NECJ	
PS2013	♦NECE	164 - 18
PS2015	♦NECE	166 - 34
	♦NECJ	
PS2016B	♦NECE	173 - 96
	♦NECJ	
PS2018	♦NECE	166 - 36
	♦NECJ	
PS2019	♦NECE	164 - 19
PS2021	♦NECE	166 - 25
	♦NECJ	
PS2022	♦NECE	169 - 32
	♦NECJ	
PS2023	♦NECJ	166 - 37
PS2031	♦NECJ	166 - 38
PS2041(A)	♦NECJ	165 - 83
PS2042(A)	NECJ	165 - 84
PS2044(A)	♦NECJ	165 - 85
PS2101	♦NECJ	165 - 51
PS2401A1(A)	♦NECE	166 - 90
	♦NECJ	
PS2401A2(A)	♦NECE	166 - 91
	♦NECJ	
PS2401A3(A)	♦NECE	167 - 8
	♦NECJ	
PS2401A4(A)	♦NECE	167 - 11
	♦NECJ	
PS2403-1	♦NECJ	167 - 4
PS2403-2	♦NECJ	167 - 7
PS2403-3	♦NECJ	167 - 10
PS2403-4	♦NECJ	167 - 13
PS3001	♦NECE	171 - 13
	♦NECJ	
PS3001(1)	♦NECE	171 - 21
PS3002	♦NECE	171 - 14
	♦NECJ	
PS3002(1)	♦NECE	171 - 31
PS4001(1)	♦NECE	150 -101
	♦NECJ	
PS4003	♦NECE	150 -102
	♦NECJ	
PS4005	♦NECE	150 -103
	♦NECJ	
PS4007	♦NECE	150 -104
	♦NECJ	
PS4008	♦NECE	158 - 48
	♦NECJ	
PS4009	♦NECE	150 -105
	♦NECJ	
PS4010	♦NECE	150 -106
	♦NECJ	
PS4011	♦NECE	150 -107
	♦NECJ	
PS4014	♦NECE	151 - 73
PS4501(A)	♦NECJ	155 - 8
PS4502	♦NECJ	122 - 22
PS6001A	♦NECE	159 - 89
	NECJ	
PT1CL3	♦KODC	121 - 16
PT1KLB	♦KODC	121 - 20
PT1MLA	♦KODC	121 - 18
PT1MLB	♦KODC	121 - 19
PT7L	♦CENB	121 - 17
	♦KODC	
PT23F	♦CENB	121 - 21
	♦KODC	
PT100(2)	QTC	117 - 1
PT350	♦SRPJ	117 - 58
PT351	SRPJ	115 - 27
PT410(1)	♦SRPJ	119 - 13
PT410F	SRPJ	121 - 96
PT430(1)	SRPJ	115 - 42
PT430F	SRPJ	115 - 43
PT431	SRPJ	115 - 44
PT431F	SRPJ	115 - 45
PT501(1)	♦SRPJ	118 - 55
PT501A	QTC	120 - 38
PT510(1)	SRPJ	118 - 54
PT550(2)	♦SRPJ	120 - 12
PT550F	♦SRPJ	118 - 63
PT-SKLT	♦KODC	121 - 22
PV1(2)	♦QTC	137 - 4
PV3	♦QTC	137 - 5
PV5	♦QTC	137 - 6
PV20	♦QTC	137 - 7
PV100B	♦QTC	137 - 8
PV100P	♦QTC	137 - 9
PY0014	♦STAJ	90 - 15
PY0015	♦STAJ	90 - 16
PY3665S	♦STAJ	64 - 70
PY3668S	♦STAJ	68 - 58
PY5562X	STAJ	66 - 41
QD7-0	♦CENB	232 - 70
QD7-1	♦CENB	232 - 71
QD7-2	♦CENB	232 - 72
QD7-3	♦CENB	232 - 73
QD7-4	♦CENB	232 - 74
QD7-5T	CENB	232 - 75
QD50-0	♦CENB	232 - 76
QD50-1	♦CENB	232 - 77
QD50-2	♦CENB	232 - 78
QD50-3	♦CENB	232 - 79
QD50-4	♦CENB	232 - 80
QD50-5T	CENB	232 - 81
QD100-0	♦CENB	232 - 82
QD100-1	♦CENB	232 - 83
QD100-2	♦CENB	232 - 84
QD100-3	♦CENB	232 - 85
QD100-4	♦CENB	232 - 86
QD100-5T	CENB	232 - 87
QD320-0	♦CENB	232 - 88
QD320-1	♦CENB	232 - 89
QD320-2	♦CENB	232 - 90
QD320-3	♦CENB	232 - 91
QD320-4	♦CENB	232 - 92
QD320-5T	CENB	232 - 93
QP123	♦LAD	97 - 60
QSF200	♦MAI	232 - 42
QSF300	♦MAI	232 - 43
QSF400	♦MAI	232 - 44
QSF600	♦MAI	232 - 45
QSF1000	♦MAI	232 - 46
R1LB	♦VAC	139 - 69
R5LB	♦VAC	139 - 73
R10EB	♦VAC	139 - 9
R10LB	♦VAC	139 - 75
R10MB	♦VAC	139 - 10
R75EB	♦VAC	139 - 11
R75LB	♦VAC	139 - 77
R100GB	♦VAC	139 - 12
R100KB	♦VAC	139 - 13
R100LB	♦VAC	139 - 81
R100MB	♦VAC	139 - 14
R1000-160	♦MER	231 - 17
R1000-500	♦MER	173 - 12
R1000-1000	♦MER	173 - 13
R1001	♦MER	125 - 1
R1001SMA	MER	125 - 2
R1101	♦MER	125 - 3
R1101SMA	MER	125 - 4
R1201	♦MER	125 - 5
R1201SMA	MER	125 - 6
R1500(2)	♦MER	233 - 49
R1800(2)	♦MER	233 - 50
R1900	♦MER	233 - 51
R5100S	♦MER	231 - 18
R5105	♦MER	231 - 19
R5500S	♦MER	231 - 20
R5760-5	♦CRS	218 - 25
R5760-6	♦CRS	218 - 26
R5760G	♦CRS	218 - 27
R5760M	CRS	218 - 28
R5760X	CRS	218 - 29
R5800S	♦MER	231 - 21
R5805	♦MER	231 - 22
R5900S	♦MER	231 - 23
R5908	♦MER	231 - 24
R5908C2	♦MER	231 - 25
R6550P01-200	MER	236 - 18
R7500	♦MER	124 - 57
R7550	♦MER	124 - 58
R7800	♦MER	124 - 59
R7880	MER	124 - 85
R7900	♦MER	124 - 86
R42007	♦SAM	233 - 52
R42008	♦SAM	233 - 53
RA14X41	♦RET	128 -110
RA16X62(A)	♦RET	129 - 4
RA32X32A	RET	232 - 94
RA50X50A	RET	232 - 95
RA100X100	RET	232 - 96
RA100X100A(A)		128 - 4
	♦RET	
RA128X128A	♦RET	232 - 97
RA256X256	RET	232 - 98
RA256X256A	♦RET	232 - 99
RBG112(A)	♦SIEG	95 - 25
	♦SIEX	
RBG1000	♦SIEG	93 - 75
	♦SIEX	
RBG4820	♦SIEG	93 - 76
	♦SIEX	
RBG8820	♦SIEG	95 - 23
	♦SIEX	
RCL1	♦PCI	214 - 29
RE2100	♦KODC	233 - 66
RE4500	♦KODC	233 - 67
RGL5621	♦SIEG	69 - 89
	♦SIEX	
RL32WD	♦RET	232 -100
RL50	♦SIEG	43 - 37
	♦SIEX	
RL54	♦SIEG	42 - 67
	♦SIEX	
RL55	♦SIEG	50 - 28
	♦SIEX	
RL64A	♦RET	128 - 73
RL64EL	♦RET	128 - 75
RL128EC17	♦RET	128 - 89
RL128EC	♦RET	128 - 90
RL128G	♦RET	128 - 84
RL128L(1)	♦RET	128 - 88
RL128S	♦RET	128 - 85
RL128SF	♦RET	128 - 86
RL128SFX	♦RET	128 - 87
RL256C	♦RET	128 - 93
RL256EC17	♦RET	128 - 96
RL256EC	♦RET	128 - 95
RL256G(2)	♦RET	128 - 94
RL384EC	♦RET	128 - 97
RL512B24	RET	128 -101
RL512B	RET	128 -102
RL512C	♦RET	128 -103
RL512EC17	♦RET	128 -109
RL512EC	♦RET	128 -108
RL512G	♦RET	128 -104
RL512S	♦RET	128 -105
RL512SF	♦RET	128 -106
RL512SFX	♦RET	128 -107
RL1024C17	♦RET	129 - 14
RL1024C	♦RET	129 - 11
RL1024G	♦RET	129 - 7
RL1024H	♦RET	129 - 12
RL1024H/20	♦RET	129 - 13
RL1024S	♦RET	129 - 8
RL1024SF	♦RET	129 - 9
RL1024SFX	♦RET	129 - 10
RL1728H	♦RET	129 - 16
RL2048H	♦RET	129 - 17
RL2048H/20	♦RET	129 - 18
RO64	RET	128 - 74
RO720A	♦RET	129 - 1
RPY31	♦MULB	112 - 83
♦PHIN	♦RTCF	
	VALG	
RPY35	♦MULB	112 - 84
♦PHIN	♦RTCF	
	VALG	
RPY51	♦MULB	113 - 17
♦PHIN	♦RTCF	
	VALG	
RPY58A	APX	130 - 56
♦MULB	♦PHIN	
RTCF	VALG	
RPY58B	MULB	130 - 59
PHIN	RTCF	
	VALG	
RPY71	MULB	132 - 22
PHIN	RTCF	
	VALG	
RPY76A	♦MULB	111 - 40
♦PHIN	♦RTCF	
	♦VALG	
RPY76B	♦APX	130 - 4
♦MULB	♦PHIN	
♦RTCF	♦VALG	
RPY86	♦APX	106 - 56
♦MULB	♦PHIN	
♦RTCF	VALG	
RPY87	♦APX	106 - 37
♦MULB	♦PHIN	
♦RTCF	VALG	
RPY88	♦APX	106 - 35
♦MULB	♦PHIN	
♦RTCF	VALG	
RPY89	♦APX	106 - 33
♦MULB	♦PHIN	
RSCB	♦RTCF	
	VALG	
RPY90A	♦MULB	137 - 24
♦PHIN	♦RTCF	
	♦VALG	
RPY90B	♦PHIN	137 - 25
♦RTCF	♦VALG	
RPY90C	♦MULB	137 - 26
♦PHIN	♦RTCF	
	♦VALG	
RPY90D	♦MULB	137 - 27
♦PHIN	♦RTCF	
	♦VALG	
RPY90E	♦MULB	137 - 28
♦PHIN	♦RTCF	
	♦VALG	
RPY91A	♦MULB	137 - 29
♦PHIN	♦RTCF	
	♦VALG	
RPY91B	♦MULB	137 - 30
♦PHIN	♦RTCF	
	♦VALG	
RPY91C	♦MULB	137 - 31
♦PHIN	♦RTCF	
	♦VALG	
RPY91D	♦MULB	137 - 32
♦PHIN	♦RTCF	
	♦VALG	
RPY91E	♦MULB	137 - 33
♦PHIN	♦RTCF	
	♦VALG	
RPY93	♦APX	137 - 10
MULB	♦PHIN	
♦RTCF	VALG	
RPY93R(A)	♦APX	158 - 65
RPY94	♦APX	106 - 36
♦MULB	♦PHIN	
♦RTCF	♦VALG	
RPY95	♦APX	106 - 34
♦MULB	♦PHIN	
RSCB	♦RTCF	
	♦VALG	
RPY96	♦APX	112 - 35
♦MULB	♦PHIN	
RSCB	♦RTCF	
	VALG	
RPY97	♦APX	106 - 31
♦MULB	♦PHIN	
♦RTCF	♦VALG	
RPY98A(A)	♦APX	125 - 44
RPY98B(A)	♦APX	125 - 28
RPY98C(A)	♦APX	125 - 29
RPY98D(A)	♦APX	125 - 30
RPY98E(A)	♦APX	125 - 31
RPY98F(A)	♦APX	125 - 32
RPY98S(A)	♦APX	125 - 33
RPY100	♦APX	106 - 32
♦MULB	♦PHIN	
♦RTCF	♦VALG	
RPY101	♦APX	125 - 34
♦MULB	♦PHIN	
♦RTCF	♦VALG	
RPY102	♦APX	106 - 26
♦MULB	♦PHIN	
♦RTCF	♦VALG	
RPY103	PHIN	106 - 29
RPY107	♦MULB	106 - 30
♦PHIN	♦RTCF	
	♦VALG	
RPY109(A)	♦MULB	106 - 25
♦PHIN	♦RTCF	
	♦VALG	
RRL1100	♦SIEX	46 - 17
RRL3105	♦SIEX	49 -104
RRL3112	♦SIEX	49 -105
RRL5601	♦SIEG	41 - 52
	♦SIEX	
RRL5621	♦SIEX	44 - 39
RRL5641	♦SIEX	46 - 14
RTC879	♦MULB	119 -101
♦PHIN	♦VALG	
RX5LB	♦VAC	139 - 43
RX10LB	♦VAC	139 - 45
RX15LB	♦VAC	139 - 49
RX80EB	VAC	139 - 15
RX80HB	♦VAC	139 - 16
RX80LB	♦VAC	139 - 57
RX80TB	♦VAC	139 - 17
RYL5621	♦SIEG	60 - 90
	♦SIEX	
S1LB	♦VAC	139 - 51
S2LB	♦VAC	139 - 53
S3LB	♦VAC	139 - 59
S4LB	♦VAC	139 - 63
S5LB	♦VAC	139 - 55
S7LB	♦VAC	139 - 61
S8LB	♦VAC	139 - 64
S10LB	♦VAC	139 - 67
S11LB	♦VAC	139 - 71
S12MD1	SRPJ	123 - 5
S12MD3	SRPJ	123 - 6
S13LB	♦VAC	139 - 78
S13MD1	SRPJ	171 - 11
S13MD3	SRPJ	171 - 55
S14LB	♦VAC	139 - 18
S17LB	♦VAC	139 - 19
S22MD1	SRPJ	123 - 7
S22MD3	SRPJ	123 - 8
S50LB	♦VAC	139 - 20
S55LB	♦VAC	139 - 21
S56LB	♦VAC	139 - 22
S84DO/A	♦PHIN	186 - 56
♦RTCF	♦VALG	
S84DO/B	♦PHIN	186 - 57
♦RTCF	♦VALG	
S100EB	♦VAC	139 - 23
S100LB	♦VAC	139 - 24
S101DD2	SRPJ	171 - 53
S101DD3	SRPJ	171 - 54
S101DD4	SRPJ	171 - 56
S102DD2	SRPJ	171 - 57
S102DP1	SRPJ	171 - 4
S102DP2	SRPJ	171 - 22
S105DT1	SRPJ	171 - 18
S110DT1	SRPJ	171 - 19
S110DT2	SRPJ	171 - 25
S150LB	♦VAC	139 - 25
S153P	♦ALGG	103 - 71
S181P	♦ALGG	103 - 51
S186P	♦ALGG	103 - 72
S191P	♦ALGG	103 - 52
S201DD2	SRPJ	171 - 58
S202DP1	SRPJ	171 - 23
S205DT1	SRPJ	171 - 24
S210DT1	SRPJ	171 - 26
S213P	♦ALGG	104 - 34
S219P	♦ALGG	104 - 35
S243P	♦ALGG	137 - 40
S0505A6	INRI	140 - 2
S0505A6PL	INRI	140 - 3
S0505A7	INRI	140 - 4
S0505A7PL	INRI	140 - 5
S0505A8	INRI	140 - 6
S0505A8PL	INRI	140 - 7
S0505A9	INRI	140 - 8
S0505A9PL	INRI	140 - 9
S0505A10	INRI	140 - 10
S0505A10PL	INRI	140 - 11
S0505A11	INRI	140 - 12
S0505A11PL	INRI	140 - 13
S0505A12	INRI	140 - 14
S0505A12PL	INRI	140 - 15
S0505E6	INRI	140 - 16
S0505E6PL	INRI	140 - 17
S0505E7	INRI	140 - 18
S0505E7PL	INRI	140 - 19
S0505E8	INRI	140 - 20
S0505E8PL	INRI	140 - 21
S0505E9	INRI	140 - 22
S0505E9PL	INRI	140 - 23
S0505E10	INRI	140 - 24
S0505E10PL	INRI	140 - 25
S0505E11	INRI	140 - 26
S0505E11PL	INRI	140 - 27
S0505E12	INRI	140 - 28
S0505E12PL	INRI	140 - 29
S0510A6	INRI	140 - 30
S0510A6PL	INRI	140 - 31
S0510A7	INRI	140 - 32
S0510A7PL	INRI	140 - 33
S0510A8	INRI	140 - 34
S0510A8PL	INRI	140 - 35
S0510A9	INRI	140 - 36
S0510A9PL	INRI	140 - 37
S0510A10	INRI	140 - 38
S0510A10PL	INRI	140 - 39
S0510A11	INRI	140 - 40
S0510A11PL	INRI	140 - 41
S0510A12	INRI	140 - 42
S0510A12PL	INRI	140 - 43
S0510E6	INRI	140 - 44
S0510E6PL	INRI	140 - 45
S0510E7	INRI	140 - 46
S0510E7PL	INRI	140 - 47
S0510E8	INRI	140 - 48
S0510E8PL	INRI	140 - 49
S0510E9	INRI	140 - 50
S0510E9PL	INRI	140 - 51
S0510E10	INRI	140 - 52
S0510E10PL	INRI	140 - 53
S0510E11	INRI	140 - 54
S0510E11PL	INRI	140 - 55
S0510E12	INRI	140 - 56
S0510E12PL	INRI	140 - 57
S0520A6	INRI	140 - 58
S0520A6PL	INRI	140 - 59
S0520A7	INRI	140 - 60
S0520A7PL	INRI	140 - 61
S0520A8	INRI	140 - 62
S0520A8PL	INRI	140 - 63
S0520A9	INRI	140 - 64
S0520A9PL	INRI	140 - 65
S0520A10	INRI	140 - 66
S0520A10PL	INRI	140 - 67
S0520A11	INRI	140 - 68
S0520A11PL	INRI	140 - 69
S0520A12	INRI	140 - 70
S0520A12PL	INRI	140 - 71
S0520E6	INRI	140 - 72
S0520E6PL	INRI	140 - 73
S0520E7	INRI	140 - 74
S0520E7PL	INRI	140 - 75
S0520E8	INRI	140 - 76
S0520E8PL	INRI	140 - 77
S0520E9	INRI	140 - 78
S0520E9PL	INRI	140 - 79
S0520E10	INRI	140 - 80
S0520E10PL	INRI	140 - 81
S0520E11	INRI	140 - 82
S0520E11PL	INRI	140 - 83
S0520E12	INRI	140 - 84
S0520E12PL	INRI	140 - 85
S0520GA6	INRI	140 - 86
S0520GA6PL	INRI	140 - 87
S0520GA7	INRI	140 - 88
S0520GA7PL	INRI	140 - 89
S0520GA8	INRI	140 - 90
S0520GA8PL	INRI	140 - 91
S0520GA9	INRI	140 - 92
S0520GA9PL	INRI	140 - 93
S0520GA10	INRI	140 - 94
S0520GA10PL	INRI	140 - 95
S0520GA11	INRI	140 - 96
S0520GA11PL	INRI	140 - 97
S0520GA12	INRI	140 - 98
S0520GA12PL	INRI	140 - 99
S0520GE6	INRI	140 -100
S0520GE6PL	INRI	140 -101
S0520GE7	INRI	140 -102
S0520GE7PL	INRI	140 -103
S0520GE8	INRI	140 -104
S0520GE8PL	INRI	140 -105
S0520GE9	INRI	140 -106
S0520GE9PL	INRI	140 -107
S0520GE10	INRI	140 -108
S0520GE10PL	INRI	140 -109
S0520GE11	INRI	140 -110
S0520GE11PL	INRI	141 - 1
S0520GE12	INRI	141 - 2
S0520GE12PL	INRI	141 - 3
S874-5K	♦HPKJ	145 - 34
S874-8K	♦HPKJ	145 - 53
S874-18K	♦HPKJ	145 - 15
S874-18L	♦HPKJ	145 - 32
S875-33R	♦HPKJ	145 - 35
S875-66R	♦HPKJ	145 - 54

Δ-Registered with JEDEC by this manufacturer

♦-Mfr's data sheet available in microfilm service

1. TYPE No. CROSS INDEX

IN TYPE NUMBER SEQUENCE

TYPE No.	MFRS	Pg&Line
S875-1010R	♦HPKJ	145 - 61
S994-13	♦HPKJ	128 - 29
S994-17	♦HPKJ	128 - 62
S994-18	♦HPKJ	128 - 63
S994-19	♦HPKJ	128 - 64
S994-22	♦HPKJ	128 - 14
S1005A6	INRI	141 - 4
S1005A6PL	INRI	141 - 5
S1005A7	INRI	141 - 6
S1005A7PL	INRI	141 - 7
S1005A8	INRI	141 - 8
S1005A8PL	INRI	141 - 9
S1005A9	INRI	141 - 10
S1005A9PL	INRI	141 - 11
S1005A10	INRI	141 - 12
S1005A10PL	INRI	141 - 13
S1005A11	INRI	141 - 14
S1005A11PL	INRI	141 - 15
S1005A12	INRI	141 - 16
S1005A12PL	INRI	141 - 17
S1005E6	INRI	141 - 18
S1005E6PL	INRI	141 - 19
S1005E7	INRI	141 - 20
S1005E7PL	INRI	141 - 21
S1005E8	INRI	141 - 22
S1005E8PL	INRI	141 - 23
S1005E9	INRI	141 - 24
S1005E9PL	INRI	141 - 25
S1005E10	INRI	141 - 26
S1005E10PL	INRI	141 - 27
S1005E11	INRI	141 - 28
S1005E11PL	INRI	141 - 29
S1005E12	INRI	141 - 30
S1005E12PL	INRI	141 - 31
S1010A6	INRI	141 - 32
S1010A6PL	INRI	141 - 33
S1010A7	INRI	141 - 34
S1010A7PL	INRI	141 - 35
S1010A8	INRI	141 - 36
S1010A8PL	INRI	141 - 37
S1010A9	INRI	141 - 38
S1010A9PL	INRI	141 - 39
S1010A10	INRI	141 - 40
S1010A10PL	INRI	141 - 41
S1010A11	INRI	141 - 42
S1010A11PL	INRI	141 - 43
S1010A12	INRI	141 - 44
S1010A12PL	INRI	141 - 45
S1010E6	INRI	141 - 46
S1010E6PL	INRI	141 - 47
S1010E7	INRI	141 - 48
S1010E7PL	INRI	141 - 49
S1010E8	INRI	141 - 50
S1010E8PL	INRI	141 - 51
S1010E9	INRI	141 - 52
S1010E9PL	INRI	141 - 53
S1010E10	INRI	141 - 54
S1010E10PL	INRI	141 - 55
S1010E11	INRI	141 - 56
S1010E11PL	INRI	141 - 57
S1010E12	INRI	141 - 58
S1010E12PL	INRI	141 - 59
S1010GA6	INRI	141 - 60
S1010GA6PL	INRI	141 - 61
S1010GA7	INRI	141 - 62
S1010GA7PL	INRI	141 - 63
S1010GA8	INRI	141 - 64
S1010GA8PL	INRI	141 - 65
S1010GA9	INRI	141 - 66
S1010GA9PL	INRI	141 - 67
S1010GA10	INRI	141 - 68
S1010GA10PL	INRI	141 - 69
S1010GA11	INRI	141 - 70
S1010GA11PL	INRI	141 - 71
S1010GA12	INRI	141 - 72
S1010GA12PL	INRI	141 - 73
S1010GE6	INRI	141 - 74
S1010GE6PL	INRI	141 - 75
S1010GE7	INRI	141 - 76
S1010GE7PL	INRI	141 - 77
S1010GE8	INRI	141 - 78
S1010GE8PL	INRI	141 - 79
S1010GE9	INRI	141 - 80
S1010GE9PL	INRI	141 - 81
S1010GE10	INRI	141 - 82
S1010GE10PL	INRI	141 - 83
S1010GE11	INRI	141 - 84
S1010GE11PL	INRI	141 - 85
S1010GE12	INRI	141 - 86
S1010GE12PL	INRI	141 - 87
S1020A6	INRI	141 - 88
S1020A6PL	INRI	141 - 89
S1020A7	♦INRI	141 - 90
S1020A7PL	INRI	141 - 91
S1020A8	INRI	141 - 92
S1020A8PL	INRI	141 - 93
S1020A9	INRI	141 - 94
S1020A9PL	INRI	141 - 95
S1020A10	INRI	141 - 96
S1020A10PL	INRI	141 - 97
S1020A11	INRI	141 - 98
S1020A11PL	INRI	141 - 99
S1020A12	INRI	141 -100
S1020A12PL	INRI	141 -101
S1020E6	♦INRI	141 -102
S1020E6PL	INRI	141 -103
S1020E7	♦INRI	141 -104
S1020E7PL	INRI	141 -105
S1020E8	♦INRI	141 -106
S1020E8PL	INRI	141 -107
S1020E9	INRI	141 -108
S1020E9PL	INRI	141 -109
S1020E10	INRI	141 -110
S1020E10PL	INRI	142 - 1
S1020E11	INRI	142 - 2
S1020E11PL	INRI	142 - 3
S1020E12	INRI	142 - 4
S1020E12PL	INRI	142 - 5
S1020GA6	INRI	142 - 6
S1020GA6PL	INRI	142 - 7
S1020GA7	INRI	142 - 8
S1020GA7PL	INRI	142 - 9
S1020GA8	INRI	142 - 10
S1020GA8PL	INRI	142 - 11
S1020GA9	INRI	142 - 12
S1020GA9PL	INRI	142 - 13
S1020GA10	INRI	142 - 14
S1020GA10PL	INRI	142 - 15
S1020GA11	INRI	142 - 16
S1020GA11PL	INRI	142 - 17
S1020GA12	INRI	142 - 18
S1020GA12PL	INRI	142 - 19
S1020GE6	INRI	142 - 20
S1020GE6PL	INRI	142 - 21
S1020GE7	INRI	142 - 22
S1020GE7PL	INRI	142 - 23
S1020GE8	INRI	142 - 24
S1020GE8PL	INRI	142 - 25
S1020GE9	INRI	142 - 26
S1020GE9PL	INRI	142 - 27
S1020GE10	INRI	142 - 28
S1020GE10PL	INRI	142 - 29
S1020GE11	INRI	142 - 30
S1020GE11PL	INRI	142 - 31
S1020GE12	INRI	142 - 32
S1020GE12PL	INRI	142 - 33
S1087	♦HPKJ	145 - 1
S1087-01	♦HPKJ	145 - 22
S1087-03	♦HPKJ	145 - 2
S1133	♦HPKJ	145 - 10
S1133-01	♦HPKJ	145 - 44
S1133-03	♦HPKJ	145 - 11
S1133-05	♦HPKJ	145 - 12
S1133-14	♦HPKJ	145 - 33
S1188	♦HPKJ	145 - 17
S1188-01	♦HPKJ	145 - 47
S1188-03	♦HPKJ	145 - 18
S1188-06	♦HPKJ	144 -110
S1190	♦HPKJ	145 - 19
S1190-01	♦HPKJ	145 - 48
S1190-03	♦HPKJ	145 - 20
S1200	♦HPKJ	232 -101
S1223-01	♦HPKJ	145 - 50
S1223-02	♦HPKJ	145 - 38
S1226-5BK	♦HPKJ	145 - 28
S1226-5BQ	♦HPKJ	145 - 29
S1226-8BK	♦HPKJ	145 - 51
S1226-8BQ	♦HPKJ	145 - 52
S1227-16BQ	♦HPKJ	145 - 26
S1227-16BR	♦HPKJ	145 - 30
S1227-33BQ	♦HPKJ	145 - 27
S1227-33BR	♦HPKJ	145 - 31
S1227-1010BQ	♦HPKJ	145 - 59
S1227-1010BR	♦HPKJ	145 - 60
S1300	♦HPKJ	232 -102
S1336-5BK	♦HPKJ	145 - 39
S1336-5BQ	♦HPKJ	145 - 40
S1336-8BK	♦HPKJ	145 - 56
S1336-8BQ	♦HPKJ	145 - 57
S1337-16BQ	♦HPKJ	145 - 41
S1337-16BR	♦HPKJ	145 - 45
S1337-33BQ	♦HPKJ	145 - 42
S1337-33BR	♦HPKJ	145 - 46
S1337-66BQ	♦HPKJ	145 - 55
S1337-66BR	♦HPKJ	145 - 58
S1337-1010BQ	♦HPKJ	145 - 62
S1337-1010BR	♦HPKJ	145 - 63
S1352	♦HPKJ	232 -103
S1437QE	SRPJ	207 - 53
S1437QF	SRPJ	207 - 54
S1446	♦HPKJ	137 - 41
S1453QE	SRPJ	207 - 55
S1453QF	SRPJ	207 - 56
S1543	♦HPKJ	232 -104
S1544	♦HPKJ	232 -105
S1545	♦HPKJ	232 -106
S1557	♦HPKJ	128 - 33
S1557-01	♦HPKJ	128 - 34
S1592	♦HPKJ	128 - 65
S1592-01	♦HPKJ	128 - 66
S1633	♦HPKJ	145 - 49
S1633-01	♦HPKJ	145 - 43
S1651	♦HPKJ	128 - 36
S1651-01	♦HPKJ	128 - 37
S1662	♦HPKJ	232 -107
S1671	♦HPKJ	128 - 35
S1722	♦HPKJ	105 - 68
S1722-01	♦HPKJ	105 - 69
S1722-02	♦HPKJ	105 - 24
S1723(1)	♦HPKJ	105 - 76
S1723-01	♦HPKJ	105 - 77
S1723-02	♦HPKJ	105 - 35
S1723-03	♦HPKJ	105 - 62
S1723-04	♦HPKJ	105 - 63
S1723-05	♦HPKJ	105 - 17
S1743	♦HPKJ	232 -108
S1771	♦HPKJ	232 -109
S1790	♦HPKJ	105 - 78
S1790-01	♦HPKJ	105 - 64
S1863	♦HPKJ	105 - 73
S1865	♦HPKJ	128 - 67
S1865-01	♦HPKJ	128 - 68
S1866	♦HPKJ	128 - 69
S1866-01	♦HPKJ	128 - 70
S2005A6	INRI	142 - 34
S2005A6PL	INRI	142 - 35
S2005A7	INRI	142 - 36
S2005A7PL	INRI	142 - 37
S2005A8	INRI	142 - 38
S2005A8PL	INRI	142 - 39
S2005A9	INRI	142 - 40
S2005A9PL	INRI	142 - 41
S2005A10	INRI	142 - 42
S2005A10PL	INRI	142 - 43
S2005A11	INRI	142 - 44
S2005A11PL	INRI	142 - 45
S2005A12	INRI	142 - 46
S2005A12PL	INRI	142 - 47
S2005E6	INRI	142 - 48
S2005E6PL	INRI	142 - 49
S2005E7	INRI	142 - 50
S2005E7PL	INRI	142 - 51
S2005E8	INRI	142 - 52
S2005E8PL	INRI	142 - 53
S2005E9	INRI	142 - 54
S2005E9PL	INRI	142 - 55
S2005E10	INRI	142 - 56
S2005E10PL	INRI	142 - 57
S2005E11	INRI	142 - 58
S2005E11PL	INRI	142 - 59
S2005E12	INRI	142 - 60
S2005E12PL	INRI	142 - 61
S2005GA6	INRI	142 - 62
S2005GA6PL	INRI	142 - 63
S2005GA7	INRI	142 - 64
S2005GA7PL	INRI	142 - 65
S2005GA8	INRI	142 - 66
S2005GA8PL	INRI	142 - 67
S2005GA9	INRI	142 - 68
S2005GA9PL	INRI	142 - 69
S2005GA10	INRI	142 - 70
S2005GA10PL	INRI	142 - 71
S2005GA11	INRI	142 - 72
S2005GA11PL	INRI	142 - 73
S2005GA12	INRI	142 - 74
S2005GA12PL	INRI	142 - 75
S2005GE6	INRI	142 - 76
S2005GE6PL	INRI	142 - 77
S2005GE7	INRI	142 - 78
S2005GE7PL	INRI	142 - 79
S2005GE8	INRI	142 - 80
S2005GE8PL	INRI	142 - 81
S2005GE9	INRI	142 - 82
S2005GE9PL	INRI	142 - 83
S2005GE10	INRI	142 - 84
S2005GE10PL	INRI	142 - 85
S2005GE11	INRI	142 - 86
S2005GE11PL	INRI	142 - 87
S2005GE12	INRI	142 - 88
S2005GE12PL	INRI	142 - 89
S2010(2)	♦HPKJ	104 -100
S2010A6	INRI	142 - 90
S2010A6PL	INRI	142 - 91
S2010A7	INRI	142 - 92
S2010A7PL	INRI	142 - 93
S2010A8	INRI	142 - 94
S2010A8PL	INRI	142 - 95
S2010A9	INRI	142 - 96
S2010A9PL	INRI	142 - 97
S2010A10	INRI	142 - 98
S2010A10PL	INRI	142 - 99
S2010A11	INRI	142 -100
S2010A11PL	INRI	142 -101
S2010A12	INRI	142 -102
S2010A12PL	INRI	142 -103
S2010E6	INRI	142 -104
S2010E6PL	INRI	142 -105
S2010E7	INRI	142 -106
S2010E7PL	INRI	142 -107
S2010E8	INRI	142 -108
S2010E8PL	INRI	142 -109
S2010E9	INRI	142 -110
S2010E9PL	INRI	143 - 1
S2010E10	INRI	143 - 2
S2010E10PL	INRI	143 - 3
S2010E11	INRI	143 - 4
S2010E11PL	INRI	143 - 5
S2010E12	INRI	143 - 6
S2010E12PL	INRI	143 - 7
S2010GA6	INRI	143 - 8
S2010GA6PL	INRI	143 - 9
S2010GA7	INRI	143 - 10
S2010GA7PL	INRI	143 - 11
S2010GA8	INRI	143 - 12
S2010GA8PL	INRI	143 - 13
S2010GA9	INRI	143 - 14
S2010GA9PL	INRI	143 - 15
S2010GA10	INRI	143 - 16
S2010GA10PL	INRI	143 - 17
S2010GA11	INRI	143 - 18
S2010GA11PL	INRI	143 - 19
S2010GA12	INRI	143 - 20
S2010GA12PL	INRI	143 - 21
S2010GE6	INRI	143 - 22
S2010GE6PL	INRI	143 - 23
S2010GE7	INRI	143 - 24
S2010GE7PL	INRI	143 - 25
S2010GE8	INRI	143 - 26
S2010GE8PL	INRI	143 - 27
S2010GE9	INRI	143 - 28
S2010GE9PL	INRI	143 - 29
S2010GE10	INRI	143 - 30
S2010GE10PL	INRI	143 - 31
S2010GE11	INRI	143 - 32
S2010GE11PL	INRI	143 - 33
S2010GE12	INRI	143 - 34
S2010GE12PL	INRI	143 - 35
S2020A6	INRI	143 - 36
S2020A6PL	INRI	143 - 37
S2020A7	INRI	143 - 38
S2020A7PL	INRI	143 - 39
S2020A8	INRI	143 - 40
S2020A8PL	INRI	143 - 41
S2020A9	INRI	143 - 42
S2020A9PL	INRI	143 - 43
S2020A10	INRI	143 - 44
S2020A10PL	INRI	143 - 45
S2020A11	INRI	143 - 46
S2020A11PL	INRI	143 - 47
S2020A12	INRI	143 - 48
S2020A12PL	INRI	143 - 49
S2020E6	INRI	143 - 50
S2020E6PL	INRI	143 - 51
S2020E7	INRI	143 - 52
S2020E7PL	INRI	143 - 53
S2020E8	INRI	143 - 54
S2020E8PL	INRI	143 - 55
S2020E9	INRI	143 - 56
S2020E9PL	INRI	143 - 57
S2020E10	INRI	143 - 58
S2020E10PL	INRI	143 - 59
S2020E11	INRI	143 - 60
S2020E11PL	INRI	143 - 61
S2020E12	INRI	143 - 62
S2020E12PL	INRI	143 - 63
S2020GA6	INRI	143 - 64
S2020GA6PL	INRI	143 - 65
S2020GA7	INRI	143 - 66
S2020GA7PL	INRI	143 - 67
S2020GA8	INRI	143 - 68
S2020GA8PL	INRI	143 - 69
S2020GA9	INRI	143 - 70
S2020GA9PL	INRI	143 - 71
S2020GA10	INRI	143 - 72
S2020GA10PL	INRI	143 - 73
S2020GA11	INRI	143 - 74
S2020GA11PL	INRI	143 - 75
S2020GA12	INRI	143 - 76
S2020GA12PL	INRI	143 - 77
S2020GE6	INRI	143 - 78
S2020GE6PL	INRI	143 - 79
S2020GE7	INRI	143 - 80
S2020GE7PL	INRI	143 - 81
S2020GE8	INRI	143 - 82
S2020GE8PL	INRI	143 - 83
S2020GE9	INRI	143 - 84
S2020GE9PL	INRI	143 - 85
S2020GE10	INRI	143 - 86
S2020GE10PL	INRI	143 - 87
S2020GE11	INRI	143 - 88
S2020GE11PL	INRI	143 - 89
S2020GE12	INRI	143 - 90
S2020GE12PL	INRI	143 - 91
S2041	♦HPKJ	115 - 46
S2042	♦HPKJ	115 - 47
S2043	♦HPKJ	115 - 48
S2216-01	♦HPKJ	104 - 65
S2216-02	♦HPKJ	104 - 66
S2227	♦HPKJ	104 - 36
S2900E5M	INRI	144 - 33
S2900E7M	INRI	144 - 40
S2900E9.5M	INRI	144 - 45
S3011-11	♦REC	178 - 40
S3021-11	♦REC	178 - 71
S3031-11	♦REC	179 - 4
S3041-11	♦REC	179 - 84
S3041R11	♦REC	179 - 85
S4311-11	♦REC	184 - 99
S4321-11	♦REC	185 - 4
S4331-11	♦REC	185 - 20
S4341-11	♦REC	185 - 89
S4341R11	♦REC	185 - 90
S8011-11	♦REC	197 - 27
S8021-11	♦REC	197 - 29
S8031-11	♦REC	197 - 28
S8041-11	♦REC	197 - 36
S8041R11	♦REC	197 - 37
S11101	♦SAM	159 -105
S11920	♦SAM	158 - 83
S12001	♦SAM	159 - 27
S13224	♦SAM	159 - 20
S13324	♦SAM	158 - 84
S14101	♦SAM	158 - 85
S14103	♦SAM	158 - 86
S15101	♦SAM	158 - 87
S15105	♦SAM	158 - 88
S16101	♦SAM	158 - 89
S16103	♦SAM	158 - 90
S16111	♦SAM	158 - 91
S16113	♦SAM	158 - 92
S17103	♦SAM	159 - 47
S17104	♦SAM	159 - 48
S17105	♦SAM	158 - 93
S17403	♦SAM	159 - 49
S17404	♦SAM	159 - 50
S17405	♦SAM	159 - 51
S19101	♦SAM	158 - 94
S19111	♦SAM	158 - 95
S19121	♦SAM	158 - 96
S19141	♦SAM	158 - 97
S22004	♦SAM	158 - 98
S22104	♦SAM	158 - 99
S27301	♦SAM	158 -100
S27311	♦SAM	158 -101
S27321	♦SAM	159 - 52
S27341	♦SAM	159 - 53
S28001	♦SAM	158 -102
S28002	♦SAM	158 -103
S28003	♦SAM	158 -104
S35201	♦SAM	159 - 36
S35202	♦SAM	159 - 37
S35203	♦SAM	159 - 38
S51101	♦SAM	158 -105
S51104	♦SAM	158 -106
S51105	♦SAM	158 -107
S51106	♦SAM	158 -108
S52101	♦SAM	158 -109
S52105	♦SAM	158 -110
S56401	♦SAM	159 - 28
S56404	♦SAM	159 - 29
S58101	♦SAM	159 - 3
S58401	♦SAM	159 - 1
S58601	♦SAM	159 - 2
S86017E	♦RCA	82 - 99
S86018E	♦RCA	82 - 5
S86020E	♦RCA	82 -100
S86021E	♦RCA	82 - 6
SA609	♦HEI	129 - 45
SA609A	♦HEI	129 - 46
SA-FP10.10PBS1A	SAI	111 - 21
SA-FP10.10PBS2	SAI	111 - 22
SAA2201	♦STAJ	57 - 42
SAA3431	♦STAJ	59 - 40
SAA4632REC	♦STAJ	58 - 46
SAA4652REC	♦STAJ	57 -103
SAA5531	♦STAJ	59 - 54
SAA5531REC	♦STAJ	58 - 40
SAA5532REC	♦STAJ	58 - 47
SAA5532TRI	♦STAJ	58 - 54
SAA5551REC	♦STAJ	57 - 38
SAA5552REC	♦STAJ	57 - 39
SAA5552TRI	♦STAJ	57 - 43
SAA5633	♦STAJ	59 - 55
SAA7851REC	♦STAJ	57 - 40
SAR1-08B	TOI	147 - 89
SAR1-08BPL	TOI	147 - 90
SAR1-08PL	TOI	147 - 91
SAR1-10B	TOI	148 - 51
SAR1-10BPL	TOI	148 - 52
SAR1-10PL	TOI	148 - 53
SAR2-08B	TOI	147 - 92
SAR2-08BPL	TOI	147 - 93
SAR2-08PL	TOI	147 - 94
SAR2-10B	TOI	148 - 54
SAR2-10BPL	TOI	148 - 55
SAR2-10PL	TOI	148 - 56
SAR3-08B	TOI	147 - 95
SAR3-08BPL	TOI	147 - 96
SAR3-08PL	TOI	147 - 97
SAR3-10B	TOI	148 - 57
SAR3-10BPL	TOI	148 - 58
SAR3-10PL	TOI	148 - 59
SAR4-08B	TOI	147 - 98
SAR4-08BPL	TOI	148 - 1
SAR4-08PL	TOI	148 - 2
SAR4-10B	TOI	148 - 60
SAR4-10BPL	TOI	148 - 61
SAR4-10PL	TOI	148 - 62
SAR5-08B	TOI	148 - 3
SAR5-08BPL	TOI	148 - 4
SAR5-08PL	TOI	148 - 5
SAR5-10B	TOI	148 - 63
SAR5-10BPL	TOI	148 - 64
SAR5-10PL	TOI	148 - 65
SAR6-08B	TOI	148 - 6
SAR6-08BPL	TOI	148 - 7
SAR6-08PL	TOI	148 - 8
SAR6-10B	TOI	148 - 66
SAR6-10BPL	TOI	148 - 67
SAR6-10PL	TOI	148 - 68
SAR7-08B	TOI	148 - 9
SAR7-08BPL	TOI	148 - 10
SAR7-08PL	TOI	148 - 11
SAR7-10B	TOI	148 - 69
SAR7-10BPL	TOI	148 - 70
SAR7-10PL	TOI	148 - 71
SAR8-08B	TOI	148 - 12
SAR8-08BPL	TOI	148 - 13
SAR8-08PL	INRI	148 - 14
SAR8-10B	TOI	148 - 72
SAR8-10BPL	TOI	148 - 73
SAR8-10PL	TOI	148 - 74
SAR9-08B	TOI	148 - 15
SAR9-08BPL	TOI	148 - 16
SAR9-08PL	TOI	148 - 17
SAR9-10B	TOI	148 - 75
SAR9-10BPL	TOI	148 - 76
SAR9-10PL	TOI	148 - 77
SAR10-08B	TOI	148 - 18
SAR10-08BPL	TOI	148 - 19
SAR10-08PL	TOI	148 - 20
SAR10-10B	TOI	148 - 78
SAR10-10BPL	TOI	148 - 79
SAR10-10PL	TOI	148 - 80
SAR2201	♦STAJ	47 - 51
SAR2221	♦STAJ	47 - 52
SAR3431	♦STAJ	49 - 19
SAR5531	♦STAJ	49 - 25
SAR5633	♦STAJ	49 - 26
SAY2201	♦STAJ	63 - 74
SAY2221	♦STAJ	63 - 75
SAY2434DEB	♦STAJ	63 - 88
SAY2531DEB	♦STAJ	64 - 71
SAY3431	♦STAJ	67 - 8
SAY3531SQR	♦STAJ	65 - 55
SAY4632REC	♦STAJ	65 - 49
SAY4652REC	♦STAJ	64 - 73
SAY5531	♦STAJ	67 - 51
SAY5531REC	♦STAJ	65 - 40
SAY5532REC	♦STAJ	65 - 50
SAY5532TRI	♦STAJ	65 - 61
SAY5551REC	♦STAJ	63 - 90
SAY5552REC	♦STAJ	63 - 91
SAY5552TRI	♦STAJ	63 - 93
SAY5556REC	♦STAJ	63 - 92
SAY5633	♦STAJ	67 - 52
SAY7851REC	♦STAJ	74 -100
SBC102	♦SRPJ	137 - 65

Δ-Registered with JEDEC by this manufacturer

♦-Mfr's data sheet available in microfilm service

1. TYPE No. CROSS INDEX

IN TYPE NUMBER SEQUENCE

TYPE No.	MFRS	Pg&Line
SBC111	♦SRPJ	137 - 77
SBC255	♦SRPJ	137 - 63
SBC541	♦SRPJ	137 - 76
SBG2201	♦STAJ	72 -107
SBG2221	♦STAJ	72 -108
SBG2434DEB	♦STAJ	73 - 7
SBG2531DEB	♦STAJ	72 - 93
SBG3431	♦STAJ	74 -108
SBG5531	♦STAJ	76 - 51
SBG5633	♦STAJ	76 - 2
SBR2201	♦STAJ	50 - 74
SBR3401	♦STAJ	53 - 72
SBR3431	♦STAJ	52 - 67
SBR5501	♦STAJ	54 - 83
SBR5531	♦STAJ	52 -103
SBR5603	♦STAJ	53 - 74
SBR5633	♦STAJ	52 -104
SBR7851REC(A)	♦STAJ	49 - 9
SCA8041C	♦SCA	109 - 95
SCA8041V	♦SCA	137 - 42
SCA8101C	♦SCA	109 - 97
SCA8101V	♦SCA	137 - 43
SCA8102C	♦SCA	109 - 96
SCA8102V	♦SCA	137 - 44
SCW20	♦LAD	96 - 73
SCW20A	♦LAD	96 - 77
SCW20B	♦LAD	96 - 78
SCW20C	♦LAD	96 - 79
SCW20D	♦LAD	96 - 80
SCW20F	♦LAD	96 - 51
SCW20F-D	♦LAD	96 - 52
SCW21	LAD	97 - 17
SCW21F	LAD	96 - 50
SCW30	♦LAD	96 -101
SD041-12-12-011	♦SDC	109 - 89
SD056-12-12-011	♦SDC	109 - 84
SD076-11-11-011	♦SDC	111 - 54
SD076-12-12-011	♦SDC	109 - 90
SD100-11-11-021	♦SDC	111 - 55
SD100-12-12-021	♦SDC	109 - 91
SD100-13-13-022	♦SDC	114 - 20
SD100-41-11-231	SDC	124 - 23
SD100-42-12-231	SDC	124 - 24
SD100-43-13-231	SDC	124 - 25
SD113-24-21-021	♦SDC	125 - 35
SD118-23-21-021	♦SDC	125 - 36
SD172-11-11-021	♦SDC	111 - 56
SD172-12-12-021	♦SDC	109 - 92
SD172-13-13-022	♦SDC	114 - 21
SD200-11-11-041	♦SDC	111 - 57
SD200-12-12-041	♦SDC	109 - 93
SD200-13-13-042	♦SDC	114 - 22
SD200-21-21-391	♦SDC	125 - 37
SD290-11-11-041	♦SDC	111 - 59
SD290-12-12-041	♦SDC	109 - 94
SD290-13-13-042	♦SDC	114 - 23
SD380-23-21XXX	♦SDC	125 - 38
SD386-22-21-251	♦SDC	125 - 39
SD444-11-11-171	♦SDC	111 - 60
SD444-33-22-253	♦SDC	107 -108
SD444-41-11-261	♦SDC	124 - 26
SD444-42-12-261	♦SDC	124 - 27
SD444-43-13-261	♦SDC	124 - 28
SD444-44-12-263	♦SDC	124 - 29
SD444-44-22-263	♦SDC	124 - 30
SD444-45-12-263	♦SDC	124 - 31
SD444-45-22-263	♦SDC	124 - 32
SD444-46-12-263	♦SDC	124 - 33
SD444-46-22-263	♦SDC	124 - 34
SD1100-11-21-181(A)	♦SDC	111 - 70
SD1100-12-22-181(A)	♦SDC	109 - 99
SD1166-21-11-391	♦SDC	125 - 40
SD1410-001	♦HON	121 - 37
SD1410-001L	♦HON	121 - 15
SD1410-002	♦HON	121 - 71
SD1410-002L	♦HON	121 - 72
SD1410-003	♦HON	121 -102
SD1410-003L	♦HON	121 -103
SD1410-004	♦HON	122 - 12
SD1410-004L	♦HON	122 - 13
SD1420-002	♦HON	108 - 75
SD1420-002L	♦HON	107 - 68
SD1440-001	♦HON	116 -106
SD1440-001L	♦HON	116 -107
SD1440-002	♦HON	117 - 95
SD1440-002L	♦HON	117 - 96
SD1440-003	♦HON	118 - 69
SD1440-003L	♦HON	118 - 70
SD1440-004	♦HON	119 - 30
SD1440-004L	♦HON	119 - 31
SD2410-001	♦HON	121 - 62
SD2410-002	♦HON	121 - 92
SD2410-003	♦HON	122 - 9
SD2420-002	♦HON	107 - 57
SD2440-001	♦HON	116 - 64
SD2440-002	♦HON	118 - 28
SD2440-003	♦HON	118 -103
SD2440-004	♦HON	119 - 53
SD3322-002	♦HON	104 - 27
SD3322-102	♦HON	104 - 28
SD3324-002	♦HON	125 - 64
SD3324-102	♦HON	125 - 65
SD3410-001	♦HON	121 - 40
SD3410-002	♦HON	121 - 81
SD3410-003	♦HON	122 - 2
SD3410-004	♦HON	122 - 19
SD3421-002	♦HON	108 - 78
SD3443-001	♦HON	116 - 44
SD3443-002	♦HON	117 - 37
SD3443-003	♦HON	118 - 20
SD3478	♦HON	104 - 84
SD3498	♦HON	104 - 68
SD04111-11-011	SDC	130 - 5
SD04112-12-011	SDC	130 - 6
SD4324	♦HON	125 - 66
SD4478	♦HON	104 - 62
SD4498	♦HON	104 - 61
SD5410-001	♦HON	121 - 73
SD5410-002	♦HON	121 -104
SD5410-003	♦HON	122 - 14
SD5421-002	♦HON	108 - 79
SD5443-001	♦HON	117 - 38
SD5443-002	♦HON	118 - 94
SD5443-003	♦HON	119 - 76
SD5443-004	♦HON	120 - 6
SD5600-00X	♦HON	125 - 52
SD5610-00X	♦HON	125 - 53
SD5620-001	♦HON	125 - 54
SD5620-002	♦HON	125 - 55
SD5630-001	♦HON	125 - 56
SD5630-002	♦HON	125 - 57
SD07611-11-011	SDC	130 - 7
SD07611-21-011	SDC	137 - 35
SD07612-12-011	SDC	130 - 8
SD07612-22-011	SDC	137 - 34
SD9007(A)	♦SDC	124 - 98
SD9740(A)	♦SDC	128 - 15
SD10041-21-231	SDC	124 - 35
SD10041-22-231	SDC	124 - 36
SD11148P-A(A)	♦SDC	147 - 44
SD11148P-B(A)	♦SDC	147 - 45
SD11148P-C(A)	♦SDC	147 - 46
SD11580P(A)	♦SDC	128 - 16
SD11875P(A)	♦SDC	232 -110
SD12149P(A)	♦SDC	233 - 1
SD20011-12-041	SDC	137 - 36
SD44431-12-253	SDC	110 - 18
SD44431-22-173	SDC	110 - 19
SD44432-12-253	SDC	108 - 1
SD44432-22-173	SDC	108 - 2
SD44441-21-261	SDC	124 - 37
SDL5L1	REC	48 - 48
SDL5L2	REC	48 - 49
SDL5L3	REC	48 - 50
SDL5L	REC	48 - 51
SDL7L1	REC	48 - 52
SDL7L2	REC	48 - 53
SDL7L3	REC	48 - 54
SDL7L	REC	48 - 55
SDL17L1	REC	73 - 51
SDL17L2	REC	73 - 52
SDL17L3	REC	73 - 53
SDL17L	REC	73 - 54
SDL37L1	REC	64 - 26
SDL37L2	REC	64 - 27
SDL37L3	REC	64 - 28
SDL37L	REC	64 - 29
SDL47L1	REC	48 - 56
SDL47L	REC	48 - 57
SDL57L1	REC	57 - 80
SDL57L2	REC	57 - 81
SDL57L3	REC	57 - 82
SDL57L	♦REC	79 - 74
SDP8004-301	♦HON	125 - 67
SDP8014-301	♦HON	125 - 68
SDP8106-001	♦HON	121 - 63
SDP8304-301	♦HON	125 - 69
SDP8314-301	♦HON	125 - 70
SDP8403-301	♦HON	116 - 14
SDP8403-302	♦HON	116 -103
SDP8403-303	♦HON	117 - 76
SDP8405-001	♦HON	117 - 39
SDP8405-002	♦HON	119 - 48
SDP8405-003	♦HON	119 - 96
SDP8405-011	♦HON	115 - 81
SDP8405-012	♦HON	115 - 82
SDP8405-12	♦HON	115 - 83
SDP8405-013	♦HON	116 - 12
SDP8405-014	♦HON	116 -101
SDP8405-015	♦HON	117 - 77
SDP8406-001	♦HON	115 - 76
SDP8406-002	♦HON	117 -109
SDP8406-003	♦HON	118 - 84
SDP8406-004	♦HON	119 - 44
SDP8407	♦HON	115 - 68
SDP8407-001	♦HON	115 - 72
SDP8425-001	♦HON	117 - 40
SDP8425-002	♦HON	119 - 49
SDP8426-001	♦HON	115 - 77
SDP8426-002	♦HON	117 -110
SDP8490-001	♦HON	117 - 27
SDP8490-002	♦HON	118 - 14
SDP8490-003	♦HON	118 - 65
SDP8490-301	♦HON	118 - 46
SDP8490-302	♦HON	119 - 15
SDP8490-303	♦HON	119 - 66
SDP8601	♦HON	125 - 58
SDP8602	♦HON	125 - 59
SDP8604-301	♦HON	125 - 71
SDP8610	♦HON	125 - 60
SDP8611	♦HON	125 - 61
SDP8612	♦HON	125 - 62
SDP8614-301	♦HON	125 - 72
SE301A	♦NECE NECJ	85 - 3
SE302A	♦NECE ♦NECJ	83 - 81
SE303(2)	♦NECJ	81 - 49
SE303A	♦NECE ♦NECJ	85 - 4
SE303A(1)	NECJ	81 -100
SE304(2)	♦NECJ	83 - 61
SE306	♦NECE NECJ	81 - 50
SE307(2)	♦NECE ♦NECJ	81 -102
SE308(2)	♦NECE NECJ	81 - 51
SE310(1)	♦NECJ	81 -101
SE1003	♦NECE NECJ	81 - 53
SE1450-001	♦HON	82 - 20
SE1450-001L	♦HON	82 - 21
SE1450-002	♦HON	82 - 45
SE1450-002L	♦HON	82 - 46
SE1450-003	♦HON	83 - 11
SE1450-003L	♦HON	83 - 12
SE1450-004	♦HON	83 - 78
SE1450-004L	♦HON	83 - 79
SE1470-001	♦HON	82 - 42
SE1470-001L	♦HON	82 - 43
SE1470-002	♦HON	83 - 4
SE1470-002L	♦HON	83 - 5
SE1470-003	♦HON	83 -103
SE1470-003L	♦HON	83 -104
SE1470-004	♦HON	84 - 33
SE1470-004L	♦HON	84 - 34
SE2460-4	♦HON	84 - 19
SE2470-001	♦HON	84 - 39
SE2470-002	♦HON	86 - 11
SE3352X02	♦HON	82 - 8
SE3352X03	♦HON	82 - 58
SE3352X04	♦HON	83 - 83
SE3352X12	♦HON	82 - 9
SE3352X13	♦HON	82 - 59
SE3362X01	♦HON	81 - 62
SE3362X02	♦HON	81 - 68
SE3362X03	♦HON	81 - 75
SE3362X04	♦HON	81 - 78
SE3450-011	♦HON	82 - 38
SE3450-012	♦HON	82 - 94
SE3450-013	♦HON	83 - 86
SE3450-014	♦HON	84 - 26
SE3470-001	♦HON	86 - 26
SE3470-002	♦HON	86 - 63
SE3470-003	♦HON	86 - 86
SE3470-004	♦HON	87 - 3
SE4352-002	♦HON	81 -108
SE4352-003	♦HON	82 - 17
SE4355-002	♦HON	81 - 77
SE5450-011	♦HON	82 - 39
SE5450-012	♦HON	82 - 95
SE5450-013	♦HON	83 - 87
SE5450-014	♦HON	84 - 27
SE5453-1	♦HON	83 - 95
SE5453-2	♦HON	84 - 47
SE5453-3	♦HON	84 - 86
SE5453-4	♦HON	85 - 45
SE5455-001	♦HON	84 - 64
SE5455-002	♦HON	85 - 38
SE5455-003	♦HON	85 - 80
SE5455-004	♦HON	85 -108
SE5470-001	♦HON	86 - 27
SE5470-002	♦HON	84 - 25
SE5470-003	♦HON	84 - 91
SE5470-004	♦HON	85 - 37
SEL510	SAKJ	183 - 57
SEL511	SAKJ	183 - 58
SEL520	SAKJ	175 - 82
SEL521	SAKJ	175 - 83
SEL610	SAKJ	183 - 59
SEL611	SAKJ	183 - 60
SEL620	SAKJ	175 - 84
SEL621	SAKJ	175 - 85
SEL1110R	SAKJ	45 -109
SEL1110S	SAKJ	49 - 91
SEL1110W	SAKJ	49 - 92
SEL1112R	SAKJ	41 - 7
SEL1120R	SAKJ	41 - 8
SEL1121R	SAKJ	41 - 9
SEL1122P	SAKJ	41 - 10
SEL1123R	SAKJ	41 - 25
SEL1124R	SAKJ	41 - 26
SEL1131G	SAKJ	78 - 63
SEL1131R	SAKJ	41 - 11
SEL1132R	SAKJ	41 - 12
SEL1134R	SAKJ	41 - 13
SEL1141R	SAKJ	41 - 14
SEL1142R	SAKJ	41 - 32
SEL1210R	SAKJ	52 - 93
SEL1210S	SAKJ	53 - 75
SEL1310E	SAKJ	74 - 65
SEL1310G	SAKJ	72 - 23
SEL1312G	SAKJ	69 - 60
SEL1320G	SAKJ	69 - 61
SEL1321G	SAKJ	69 - 62
SEL1323G	SAKJ	69 - 72
SEL1324G	SAKJ	69 - 73
SEL1331G	SAKJ	69 - 63
SEL1334G	SAKJ	69 - 64
SEL1341G	SAKJ	69 - 65
SEL1342G	SAKJ	69 - 77
SEL1410E	SAKJ	77 - 71
SEL1410G	SAKJ	77 - 72
SEL1710K	SAKJ	65 - 16
SEL1710Y	SAKJ	62 - 98
SEL1712Y	SAKJ	60 - 72
SEL1720Y	SAKJ	60 - 73
SEL1721Y	SAKJ	60 - 74
SEL1723D	SAKJ	55 - 70
SEL1723Y	SAKJ	60 - 81
SEL1731Y	SAKJ	60 - 75
SEL1741Y	SAKJ	60 - 76
SEL1910A	SAKJ	58 - 25
SEL1910D	SAKJ	56 -102
SEL1923D	SAKJ	55 - 71
SEL1924D	SAKJ	55 - 72
SEL2110R	SAKJ	45 - 9
SEL2110S	SAKJ	45 - 60
SEL2210R	SAKJ	51 - 85
SEL2210S	SAKJ	52 - 52
SEL2310E	SAKJ	73 - 65
SEL2310G	SAKJ	73 - 2
SEL2410E	SAKJ	76 - 43
SEL2410G	SAKJ	75 - 82
SEL2710K	SAKJ	66 - 60
SEL2710Y	SAKJ	66 - 52
SEL2910A	SAKJ	57 - 93
SEL2910D	SAKJ	57 - 32
SEP8505-001	♦HON	82 - 72
SEP8505-002	♦HON	83 - 55
SEP8505-003	♦HON	84 - 52
SEP8505-004	♦HON	84 - 93
SEP8506-001	♦HON	81 -106
SEP8506-002	♦HON	82 - 40
SEP8506-003	♦HON	82 - 61
SEP8506-004	♦HON	83 - 18
SEP8507-001	♦HON	82 - 50
SEP8525-001	♦HON	82 - 73
SEP8525-002	♦HON	83 - 56
SEP8526-001	♦HON	81 - 89
SEP8526-002	♦HON	82 - 41
SEP8703-001	♦HON	88 - 71
SEP8703-002	♦HON	88 - 73
SEP8703-003	♦HON	88 - 75
SEP8703-004	♦HON	88 - 77
SEP8703-301	♦HON	87 - 79
SEP8703-302	♦HON	88 - 14
SEP8703-303	♦HON	88 - 33
SEP8703-304	♦HON	88 - 50
SEP8705-001	♦HON	82 -102
SEP8705-002	♦HON	84 - 4
SEP8705-003	♦HON	84 - 92
SEP8705-004	♦HON	85 - 44
SEP8706-001	♦HON	82 - 16
SEP8706-002	♦HON	82 - 60
SEP8706-003	♦HON	83 - 6
SEP8706-4	♦HON	81 - 56
SEP8790-001	♦HON	86 - 87
SEP8790-002	♦HON	87 - 12
SEP8790-003	♦HON	87 - 44
SEP8790-301	♦HON	84 - 46
SEP8790-302	♦HON	84 - 78
SEP8790-303	♦HON	85 - 15
SFH100	♦SIEG ♦SIEX	109 - 45
SFH200	♦SIEG ♦SIEX	107 - 43
SFH202	♦SIEG ♦SIEX	105 - 60
SFH202A(A)	♦SIEX	104 - 58
SFH204	♦SIEG ♦SIEX	128 - 27
SFH205	♦SIEG ♦SIEX	105 - 84
SFH205Q2	♦SIEG ♦SIEX	105 - 85
SFH206	♦SIEG ♦SIEX	111 - 38
SFH206K	♦SIEG ♦SIEX	111 - 39
SFH217(A)	♦SIEG ♦SIEX	106 - 1
SFH217F(A)	♦SIEG ♦SIEX	106 - 2
SFH250(A)	♦SIEX	103 - 57
SFH303	♦SIEG ♦SIEX	119 - 9
SFH303F	♦SIEG ♦SIEX	117 - 2
SFH305-2	♦SIEG ♦SIEX	117 - 74
SFH305-3	♦SIEG ♦SIEX	117 -107
SFH309	♦SIEX	119 - 26
SFH309F	♦SIEG ♦SIEX	118 - 9
SFH317(A)	♦SIEG ♦SIEX	116 - 91
SFH317F(A)	♦SIEG ♦SIEX	115 - 66
SFH400-II	♦SIEG	85 -102
SFH400-III	♦SIEG	85 -103
SFH401-II	♦SIEG	83 -100
SFH401I	♦SIEG	85 -104
SFH402-II	♦SIEG	83 -101
SFH402-III	♦SIEG	83 -102
SFH404	♦SIEG ♦SIEX	81 -107
SFH405-2	♦SIEG ♦SIEX	81 - 54
SFH405-3	♦SIEG ♦SIEX	81 - 55
SFH407-2	♦SIEX	84 - 97
SFH407-3	♦SIEX	85 - 78
SFH407II	♦SIEG	85 - 16
SFH407III	♦SIEG	85 - 79
SFH409	♦SIEX	86 - 69
SFH480	♦SIEG ♦SIEX	86 - 88
SFH481	♦SIEG ♦SIEX	86 - 89
SFH482	♦SIEG ♦SIEX	86 - 90
SFH484	♦SIEG ♦SIEX	87 - 53
SFH485	♦SIEG ♦SIEX	87 - 54
SFH485P	♦SIEG ♦SIEX	87 - 55
SFH487	♦SIEG ♦SIEX	87 - 56
SFH487P	♦SIEG ♦SIEX	87 - 57
SFH500	♦SIEG ♦SIEX	116 -109
SFH600-0	♦SIEG ♦SIEX	165 -101
SFH600-1	♦SIEG ♦SIEX	165 -104
SFH600-2	♦SIEG ♦SIEX	165 -107
SFH600-3	♦SIEG ♦SIEX	165 -110
SFH601-1	♦SIEG ♦SIEX	167 - 27
SFH601-2	♦SIEG ♦SIEX	167 - 33
SFH601-3	♦SIEG ♦SIEX	167 - 39
SFH601-4	♦SIEG ♦SIEX	167 - 45
SFH601G1	♦SIEG ♦SIEX	167 - 28
SFH601G2	♦SIEG ♦SIEX	167 - 34
SFH601G3	♦SIEG ♦SIEX	167 - 40
SFH601G4	♦SIEG ♦SIEX	167 - 46
SFH609-1	♦SIEG ♦SIEX	167 - 29
SFH609-2	♦SIEG ♦SIEX	167 - 35
SFH609-3	♦SIEG ♦SIEX	167 - 41
SFH610-1	♦SIEG ♦SIEX	165 - 99
SFH610-2	♦SIEG ♦SIEX	165 -102
SFH610-3	♦SIEG ♦SIEX	165 -105
SFH610-4	♦SIEG ♦SIEX	165 -108
SFH611-1	♦SIEG ♦SIEX	165 -100
SFH611-2	♦SIEG ♦SIEX	165 -103
SFH611-3	♦SIEG ♦SIEX	165 -106
SFH611-4	♦SIEG ♦SIEX	165 -109
SFH900	♦SIEX	160 - 46
SFH900-1	♦SIEG ♦SIEX	160 - 47
SFH900-2	♦SIEG ♦SIEX	160 - 48
SFK610-1	♦SIEX	167 - 30
SFK610-2	♦SIEX	167 - 36
SFK610-3	♦SIEX	167 - 42
SFK610-4	♦SIEX	167 - 47
SFK611-1	♦SIEX	167 - 31
SFK611-2	♦SIEX	167 - 37
SFK611-3	♦SIEX	167 - 43

Δ-Registered with JEDEC by this manufacturer

♦-Mfr's data sheet available in microfilm service

1. TYPE No. CROSS INDEX

IN TYPE NUMBER SEQUENCE

TYPE No.	MFRS	Pg&Line
SFK611-4	♦SIEX	167 - 48
SG1C	♦KODC	160 - 18
SG1CL3-1	♦KODC	159 - 75
SG1CL3K	♦KODC	151 - 40
SG2BC	♦KODC	159 - 90
SG7L2	♦KODC	160 - 12
SG7L3	♦KODC	160 - 13
SG7L4	♦KODC	151 - 41
SG11FKT	♦KODC	151 - 42
SG23FF	♦KODC	152 - 19
SG23FH	♦KODC	152 - 20
SG23FI	♦KODC	152 - 21
SG23FL	♦KODC	152 - 22
SG23FT	♦CENB	152 - 23
	♦KODC	
SG27N	♦KODC	150 -108
SG203DA	♦NECE	74 - 70
SG203DA(3)	♦NECJ	74 - 74
SG203TA	♦NECE	76 - 12
SG203TA(3)	♦NECJ	76 - 22
SG204D	♦NECJ	75 - 83
SG205D	♦NECE	74 - 88
SG205T(2)	♦NECE	75 -107
SG206D	♦NECE	70 - 66
	♦NECJ	
SG206T	♦NECE	72 - 47
	♦NECJ	
SG206T(i)	♦NECJ	72 - 73
SG213D(A)	♦NECE	75 - 52
	♦NECJ	
SG213T(A)	♦NECE	77 - 54
	♦NECJ	
SG215D	♦NECE	75 - 41
	♦NECJ	
SG215T	♦NECE	76 - 57
	♦NECJ	
SG225D	♦NECJ	73 - 84
SG231D	♦NECE	69 - 46
	♦NECJ	
SG232D	♦NECE	69 - 74
	♦NECJ	
SG233D	♦NECE	69 - 79
	♦NECJ	
SG235D	♦NECE	69 - 66
	♦NECJ	
SG236D	♦NECE	69 - 75
	♦NECJ	
SG237D	♦NECE	69 - 76
	♦NECJ	
SG238D	♦NECE	69 - 67
	♦NECJ	
SG239D	♦NECE	69 - 68
	♦NECJ	
SG240D(A)	♦NECE	71 - 47
	♦NECJ	
SG241D	♦NECJ	74 - 3
SG261D(A)	♦NECE	73 - 87
	♦NECJ	
SG262D	♦NECJ	73 - 42
SG263D	♦NECJ	72 - 57
SG813D	♦NECJ	74 - 78
SG813T	♦NECJ	74 - 79
SG815D	♦NECJ	71 - 48
SG815T	♦NECJ	73 - 85
SG825D	♦NECJ	69 - 69
SG1009	♦RCA	84 - 68
SG1009A	♦RCA	85 - 63
SG1009AF	RCA	85 - 64
SG1009F	RCA	84 - 69
SG1010	♦RCA	84 - 70
SG1010A	♦RCA	85 - 65
SG1010AF	♦RCA	85 - 66
SG1010F	♦RCA	84 - 71
SG2001(2)	♦RCA	97 - 64
SG2001A	♦RCA	97 - 65
SG2002(2)	♦RCA	97 - 69
SG2002A	♦RCA	97 - 70
SG2003(2)	♦RCA	97 - 80
SG2003A	♦RCA	97 - 81
SG2004(2)	♦RCA	97 - 92
SG2004A	♦RCA	97 - 93
SG2005(2)	♦RCA	97 - 88
SG2005A	♦RCA	97 - 89
SG2006	♦RCA	97 - 98
SG2006A	♦RCA	97 - 99
SG2007	♦RCA	97 -110
SG2007A	♦RCA	98 - 1
SG2009	♦RCA	98 - 7
SG2009A	♦RCA	98 - 8
SG2010	♦RCA	98 - 10
SG2010A	♦RCA	98 - 11
SG2012(2)	♦RCA	98 - 20
SG2012A	♦RCA	98 - 21
SG3001	♦RCA	98 - 25
SG-DP01	♦KODC	152 - 24
SG-DP02	♦KODC	152 - 25
SG-DP03	♦KODC	152 - 26
SGD040A	♦EGG	105 - 2
SGD040B	♦EGG	105 - 3
SGD040L	♦EGG	105 - 4
SGD100A	♦EGG	105 - 18
SGD200	♦EGG	105 - 36
SGD444	♦EGG	105 - 42
SGD444-2	♦EGG	105 - 43
SGD444-4	♦EGG	105 - 44
SIAS1-9145-1	SBR	99 - 45
SIAS2-9145-1	SBR	99 - 46
SIAS-.5-9145-1		99 - 47
	SBR	
SID52501AD	♦RCA	233 - 2
SID52501BD	♦RCA	233 - 3
SIGA1-9145-1	SBR	110 - 34
SIGA2-9145-1	SBR	110 - 35

TYPE No.	MFRS	Pg&Line
SIGA-.5-9145-1		110 - 36
	SBR	
SIRAD1	♦SOL	86 - 93
SIRAD2	♦SOL	84 - 16
SIRAD3	♦SOL	84 -102
SIRAD4	♦SOL	86 - 30
SIRD1	♦SOL	84 - 37
SIRD2	♦SOL	84 - 87
SIRD3	♦SOL	85 - 67
SIRD4	♦SOL	84 - 76
SIRD5	♦SOL	83 - 82
SIRD6	♦SOL	85 - 32
SIRD7	♦SOL	83 - 66
SIRD8	♦SOL	83 - 29
SIRD9	♦SOL	84 - 18
SIRD10	♦SOL	86 - 45
SIRD11	♦SOL	86 -102
SIRD500C	♦SOL	86 - 94
SL1012	♦TSEJ	181 - 81
SL1013	♦TSEJ	181 - 93
SL1015-41T	♦TSEJ	193 -107
SL1032	♦TSEJ	176 - 24
SL1043T	♦TSEJ	182 - 89
SL1044-01T	♦TSEJ	182 - 90
SL1044A	♦TSEJ	182 - 91
SL1051T	♦TSEJ	197 - 5
SL1052T	♦TSEJ	197 - 6
SL1064-20	♦TSEJ	177 - 56
SL1066	♦TSEJ	199 - 13
SL1071T	♦TSEJ	198 - 42
SL1072T	♦TSEJ	197 - 7
SL1086	♦TSEJ	199 - 15
SL1160L	♦TSEJ	193 - 65
SL1161	♦TSEJ	193 - 79
SL1162	♦TSEJ	193 - 80
SL1169L	♦TSEJ	193 - 66
SL1170	♦TSEJ	182 - 73
SL1171-03	♦TSEJ	181 - 69
SL1171T	♦TSEJ	181 - 67
SL1172-03	♦TSEJ	181 - 70
SL1172T	♦TSEJ	181 - 68
SL1173-03	♦TSEJ	176 - 20
SL1174-03	♦TSEJ	176 - 21
SL1179	♦TSEJ	182 - 74
SL1214T	♦TSEJ	190 - 49
SL1221	♦TSEJ	182 - 83
SL1222	♦TSEJ	182 - 84
SL1261-01	♦TSEJ	193 - 83
SL1262-01	♦TSEJ	193 - 84
SL1263	♦TSEJ	191 - 35
SL1264	♦TSEJ	191 - 36
SL1271	♦TSEJ	181 - 75
SL1272	♦TSEJ	181 - 76
SL1321-01	♦TSEJ	181 - 79
SL1405	♦TSEJ	176 - 25
SL1405-20	♦TSEJ	176 - 26
SL1406-20	♦TSEJ	176 - 27
SL1423	♦TSEJ	193 -108
SL1424	♦TSEJ	193 -109
SL1435	♦TSEJ	181 - 82
SL1435-01	♦TSEJ	181 - 83
SL1436-01	♦TSEJ	181 - 84
SL1447	♦TSEJ	193 -110
SL1450L	♦TSEJ	194 - 8
SL1452	♦TSEJ	181 - 62
SL1453P	♦TSEJ	198 - 40
SL1454P	♦TSEJ	198 - 41
SL1459L	♦TSEJ	194 - 9
SL1475-04	♦TSEJ	181 - 85
SL1476-04	♦TSEJ	181 - 86
SL1490L	♦TSEJ	194 - 10
SL1493T	♦TSEJ	194 - 2
SL1494T	♦TSEJ	194 - 3
SL1495(2)	♦TSEJ	176 - 28
SL1496	♦TSEJ	176 - 29
SL1497T	♦TSEJ	194 - 4
SL1498T	♦TSEJ	194 - 5
SL1499L	♦TSEJ	194 - 11
SL1511-03	♦TSEJ	181 - 94
SL1512-03	♦TSEJ	181 - 95
SL1514	♦TSEJ	176 - 54
SL1524	♦TSEJ	181 - 96
SL1552	♦TSEJ	176 - 55
SL1562	♦TSEJ	194 - 17
SL1572	♦TSEJ	181 - 97
SL1574	♦TSEJ	181 - 98
SL1582	♦TSEJ	176 - 56
SL1612F	♦TSEJ	176 - 60
SL1713	♦TSEJ	182 - 45
SL1722T	♦TSEJ	197 - 8
SL1724	♦TSEJ	182 - 95
SL1752	♦TSEJ	176 - 62
SL2012	♦TSEJ	181 - 87
SL2015-41T	♦TSEJ	194 - 6
SL2032	♦TSEJ	176 - 32
SL2043T	♦TSEJ	182 - 92
SL2044-01T	♦TSEJ	182 - 93
SL2044C	♦TSEJ	182 - 94
SL2064-20K	♦TSEJ	177 - 61
SL2066	♦TSEJ	199 - 14
SL2160G	♦TSEJ	193 - 71
SL2161	♦TSEJ	193 - 81
SL2162	♦TSEJ	193 - 82
SL2169G	♦TSEJ	193 - 72
SL2170	♦TSEJ	182 - 75
SL2171	♦TSEJ	181 - 73
SL2171T	♦TSEJ	181 - 71
SL2172	♦TSEJ	181 - 74
SL2172T	♦TSEJ	181 - 72
SL2173	♦TSEJ	176 - 22
SL2174	♦TSEJ	176 - 23
SL2179	♦TSEJ	182 - 76
SL2214T	♦TSEJ	190 - 52
SL2221	♦TSEJ	182 - 87

TYPE No.	MFRS	Pg&Line
SL2222	♦TSEJ	182 - 88
SL2240G	♦TSEJ	193 - 87
SL2249G	♦TSEJ	193 - 88
SL2261-01	♦TSEJ	193 - 85
SL2262-01	♦TSEJ	193 - 86
SL2263	♦TSEJ	191 - 37
SL2264	♦TSEJ	191 - 38
SL2271	♦TSEJ	181 - 77
SL2272	♦TSEJ	181 - 78
SL2321-01	♦TSEJ	181 - 80
SL2405	♦TSEJ	176 - 33
SL2405-20	♦TSEJ	176 - 34
SL2406-20	♦TSEJ	176 - 35
SL2424	♦TSEJ	194 - 1
SL2435	♦TSEJ	181 - 88
SL2435-01	♦TSEJ	181 - 89
SL2436-01	♦TSEJ	181 - 90
SL2447	♦TSEJ	194 - 7
SL2450G	♦TSEJ	194 - 12
SL2459G	♦TSEJ	194 - 13
SL2475-04	♦TSEJ	181 - 91
SL2476-04	♦TSEJ	181 - 92
SL2490G	♦TSEJ	194 - 14
SL2495	♦TSEJ	176 - 36
SL2496	♦TSEJ	176 - 37
SL2499G	♦TSEJ	194 - 15
SL2511-03	♦TSEJ	181 - 99
SL2512-03	♦TSEJ	181 -100
SL2514	♦TSEJ	176 - 57
SL2524	♦TSEJ	181 -101
SL2552	♦TSEJ	176 - 58
SL2562	♦TSEJ	194 - 16
SL2572-01K	♦TSEJ	181 -102
SL2574	♦TSEJ	181 -103
SL2582	♦TSEJ	176 - 59
SL2612F	♦TSEJ	176 - 61
SL2713	♦TSEJ	182 - 46
SL2724	♦TSEJ	182 - 96
SL2752	♦TSEJ	176 - 63
SL5000	♦MULB	63 - 23
♦PHIN	♦RTCF	
	♦VALG	
SL5001	♦MULB	47 - 37
♦PHIN	♦RTCF	
	♦VALG	
SL5002(A)	♦MULB	72 - 64
♦PHIN	♦RTCF	
	♦VALG	
SL5003	♦MULB	61 - 81
♦PHIN	♦RTCF	
	♦VALG	
SL5004	♦MULB	47 - 49
♦PHIN	♦RTCF	
	♦VALG	
SL5005	♦MULB	72 -105
♦PHIN	♦RTCF	
	♦VALG	
SL5011	♦MULB	48 - 96
♦PHIN	♦RTCF	
	♦VALG	
SL5014	♦MULB	51 - 49
♦PHIN	♦RTCF	
	♦VALG	
SL5500	♦MULB	165 - 19
♦PHIN	♦RTCF	
	♦VALG	
SL5501	♦MULB	165 - 20
♦PHIN	♦RTCF	
	♦VALG	
SL5502R	♦MULB	168 - 1
♦PHIN	♦RTCF	
	♦VALG	
SL5504	♦MULB	164 -101
♦PHIN	♦RTCF	
	♦VALG	
SL5505	♦HPA	173 - 98
SL5505S	PHIN	164 -102
SL5511	PHIN	164 -103
SL5722T	♦TSEJ	197 - 9
SLA1C	REC	182 - 4
SLA2	REC	176 - 9
SLA1101	♦TSEJ	92 - 9
SLA1131	♦TSEJ	93 - 35
SLA1221	♦TSEJ	200 - 27
SLA1232	♦TSEJ	200 - 72
SLA1572	♦TSEJ	94 -100
SLA1592	♦TSEJ	94 -101
SLA1621	♦TSEJ	95 - 17
SLA2101	♦TSEJ	92 - 61
SLA2131	♦TSEJ	93 - 46
SLA2221	♦TSEJ	200 - 28
SLA2232	♦TSEJ	200 - 73
SLA5101-02	♦TSEJ	92 - 38
SLA5372-01	REC	90 - 6
	♦TSEJ	
SLF101C	♦TSEJ	45 -110
SLF102B	♦TSEJ	47 - 95
SLF103B	♦TSEJ	89 -108
SLF104B	♦TSEJ	92 - 87
SLF106B	♦TSEJ	89 -109
SLF201C	♦TSEJ	73 - 71
SLF202B	♦TSEJ	75 - 27
SLF203B	♦TSEJ	90 - 24
SLF204B	♦TSEJ	92 -102
SLF206B	♦TSEJ	90 - 25
SLF301C	♦TSEJ	73 - 72
SLF402B	♦TSEJ	66 - 37
SLF502D	♦TSEJ	89 -104
SLM13D	♦RHM	55 - 60
SLM13M	♦RHM	69 - 38
SLM13V	♦RHM	40 - 26
SLM13Y	♦RHM	60 - 60
SLM23VD	♦RHM	79 - 88
SLM23VM	♦RHM	78 - 76

TYPE No.	MFRS	Pg&Line
SLM23VY	♦RHM	79 - 65
SLM35VYM	♦RHM	79 -110
SLM45VDYM	♦RHM	80 - 4
SLP24B	♦TSEJ	44 - 36
SLP102A	♦TSEJ	44 - 37
SLP103A	♦TSEJ	40 -110
SLP104A	♦TSEJ	41 - 1
SLP114A	♦TSEJ	45 - 41
SLP114B	♦TSEJ	44 - 41
SLP123B	♦TSEJ	44 - 38
SLP135B	♦TSEJ	46 - 24
SLP136B	♦TSEJ	47 - 62
SLP136C50	♦TSEJ	53 - 11
SLP138A	♦TSEJ	53 - 45
SLP138C50	♦TSEJ	53 - 14
SLP139B	♦TSEJ	44 - 90
SLP141B	♦TSEJ	45 - 48
SLP145B	♦TSEJ	44 - 44
SLP146B	♦TSEJ	43 - 5
SLP148A	♦TSEJ	53 - 76
SLP148B	♦TSEJ	53 - 46
SLP151B	♦TSEJ	42 - 29
SLP152B	♦TSEJ	92 - 28
SLP153B	♦TSEJ	43 - 6
SLP154B	♦TSEJ	42 - 30
SLP155B	♦TSEJ	43 - 7
SLP156B	♦TSEJ	43 - 8
SLP158B	♦TSEJ	41 - 2
SLP159B	♦TSEJ	42 - 31
SLP160C	♦TSEJ	53 - 15
SLP161B	♦TSEJ	46 - 25
SLP162B	♦TSEJ	46 - 26
SLP165B	♦TSEJ	42 - 32
SLP166B	♦TSEJ	92 - 21
SLP167B	♦TSEJ	92 - 29
SLP169B	♦TSEJ	92 - 12
SLP170C	♦TSEJ	53 - 16
SLP171D	♦TSEJ	45 - 49
SLP172B	♦TSEJ	92 - 30
SLP173B01	♦TSEJ	42 - 33
SLP174B	♦TSEJ	42 - 34
SLP175B	♦TSEJ	42 - 35
SLP176B	♦TSEJ	44 - 91
SLP177B	♦TSEJ	43 - 9
SLP178C	♦TSEJ	43 - 10
SLP202C	♦TSEJ	71 -104
SLP203C	♦TSEJ	69 - 58
SLP204C	♦TSEJ	69 - 59
SLP214B	♦TSEJ	72 -102
SLP223B	♦TSEJ	72 - 87
SLP224B	♦TSEJ	72 - 88
SLP235B	♦TSEJ	74 - 89
SLP236B	♦TSEJ	74 - 90
SLP236C50	♦TSEJ	78 - 19
SLP238C50	♦TSEJ	77 - 92
SLP239B	♦TSEJ	73 - 4
SLP241B	♦TSEJ	73 - 5
SLP244B	♦TSEJ	71 -105
SLP245B	♦TSEJ	72 - 37
SLP246B	♦TSEJ	71 -106
SLP251B	♦TSEJ	71 - 64
SLP252B	♦TSEJ	92 - 71
SLP253B	♦TSEJ	72 - 29
SLP254B	♦TSEJ	71 - 65
SLP255B	♦TSEJ	71 - 66
SLP256B	♦TSEJ	71 - 67
SLP258B	♦TSEJ	71 - 33
SLP259B	♦TSEJ	71 -107
SLP260C	♦TSEJ	78 - 20
SLP261B	♦TSEJ	73 -101
SLP262B	♦TSEJ	73 -102
SLP264B	♦TSEJ	74 - 91
SLP265B	♦TSEJ	74 - 64
SLP266B	♦TSEJ	92 - 72
SLP267B	♦TSEJ	92 - 70
SLP269B	♦TSEJ	92 - 76
SLP270C	♦TSEJ	77 - 93
SLP271D	♦TSEJ	74 - 92
SLP272B	♦TSEJ	92 - 77
SLP273B01	♦TSEJ	71 -108
SLP274B	♦TSEJ	71 -109
SLP275B	♦TSEJ	72 - 89
SLP276B	♦TSEJ	73 - 6
SLP277B	♦TSEJ	72 - 90
SLP278C	♦TSEJ	73 -103
SLP280C	♦TSEJ	74 - 93
SLP280F50U	♦TSEJ	76 - 44
SLP281B	♦TSEJ	74 - 94
SLP414B	♦TSEJ	64 - 79
SLP435B	♦TSEJ	66 - 96
SLP436B	♦TSEJ	67 - 7
SLP436C50	♦TSEJ	68 - 84
SLP441B	♦TSEJ	65 - 41
SLP444B	♦TSEJ	64 - 60
SLP446B	♦TSEJ	64 - 61
SLP451B	♦TSEJ	65 - 42
SLP452B	♦TSEJ	92 - 53
SLP453B	♦TSEJ	65 - 43
SLP454B	♦TSEJ	64 - 62
SLP455B	♦TSEJ	65 - 44
SLP456B	♦TSEJ	63 - 86
SLP458B	♦TSEJ	62 - 23
SLP459B	♦TSEJ	64 - 63
SLP460C	♦TSEJ	68 - 22
SLP461B	♦TSEJ	64 - 64
SLP462B	♦TSEJ	64 - 65
SLP464B	♦TSEJ	66 - 38
SLP465B	♦TSEJ	65 - 15
SLP466B	♦TSEJ	92 - 54
SLP467B	♦TSEJ	92 - 52
SLP470C	♦TSEJ	68 - 59
SLP471D	♦TSEJ	65 - 45
SLP473B01	♦TSEJ	64 - 66
SLP474B	♦TSEJ	64 - 67

TYPE No.	MFRS	Pg&Line
SLP475B	♦TSEJ	65 - 46
SLP477B	♦TSEJ	65 - 47
SLP478C	♦TSEJ	65 - 48
SLP480C	♦TSEJ	66 - 97
SLP481B	♦TSEJ	66 - 98
SLP520D	♦TSEJ	79 - 6
SLP530D	♦TSEJ	79 - 20
SLP531D	♦TSEJ	78 - 83
SLP532D40	♦TSEJ	78 - 84
SLP540A	♦TSEJ	79 - 56
SLP540D	♦TSEJ	79 - 39
SLP541D	♦TSEJ	78 - 78
SLP575D40	♦TSEJ	78 - 85
SLP575D42	♦TSEJ	79 -105
SLP936C50	♦TSEJ	54 - 94
SLP938C50	♦TSEJ	54 - 74
SLP978C	♦TSEJ	50 - 54
SLP979B50	♦TSEJ	49 - 74
SLP980C	♦TSEJ	52 - 53
SLP981A50	♦TSEJ	53 - 36
SLR902A	♦TSEJ	85 - 48
SLR921A	♦TSEJ	85 - 52
SLR922A	♦TSEJ	85 - 53
SLR931A	♦TSEJ	86 - 34
SLR932A	♦TSEJ	86 - 35
SM810-001	♦BEC	224 - 8
SM810-002	♦BEC	224 - 30
SM851	♦BEC	224 - 34
SM852	♦BEC	224 - 37
SM853	♦BEC	224 - 44
SM854	♦BEC	224 - 38
SM856	♦BEC	224 - 39
SM857	♦BEC	224 - 45
SN713B	♦NECJ	182 - 79
SN716B	♦NECJ	182 - 80
SP1	♦KODC	106 - 81
SP1CL3	♦KODC	107 - 45
SP1KL	♦KODC	107 - 48
SP1ML	♦KODC	107 - 44
SP2	♦KODC	106 - 82
SP2A40B	♦INRI	144 - 69
SP2B48B	♦INRI	144 - 70
SP2C80B	♦INRI	144 - 71
SP2D96B	INRI	144 - 72
SP2ML	♦CENB	107 - 47
	♦KODC	
SP3	♦KODC	106 - 83
SP3ML	♦KODC	107 - 51
SP4	♦KODC	106 - 84
SP4C40B	INRI	144 - 81
SP4D48B	INRI	144 - 82
SP5(2)	♦KODC	106 - 85
SP7L	♦KODC	107 - 40
SP8K	♦CENB	107 - 56
	♦KODC	
SP8ML	♦KODC	107 - 54
SP10(2)	♦KODC	106 - 86
SP12FS	♦KODC	107 - 42
SP15(2)	♦KODC	106 - 87
SP17	♦KODC	106 - 88
SP19	♦KODC	106 - 89
SP26	♦KODC	106 - 90
SP27	♦KODC	106 - 91
SP29	♦KODC	106 - 92
SP30(2)	♦KODC	106 - 93
SP45	♦KODC	106 - 94
SP45ML	♦CENB	107 - 52
	♦KODC	
SP55	♦KODC	106 - 95
SP60	♦KODC	106 - 96
SP101(2)	♦BEC	224 - 98
SP102(2)	♦BEC	224 - 99
SP113	♦KODC	106 - 97
SP252	♦BEC	224 - 40
SP254	♦KODC	106 - 98
SP257F	♦KODC	106 - 99
SP324	♦BEC	224 - 10
SP325	♦BEC	224 - 11
SP331	♦BEC	224 - 21
SP332	♦BEC	224 - 23
SP333	♦BEC	224 - 25
SP334	♦BEC	224 - 20
SP351	♦BEC	224 - 35
SP352	♦BEC	224 - 41
SP353	♦BEC	224 - 46
SP354	♦BEC	224 - 42
SP355	♦BEC	224 - 47
SP356	♦BEC	224 - 50
SP357	♦BEC	224 - 48
SP358	♦BEC	224 - 51
SP431	♦BEC	224 -104
SP452	♦BEC	224 - 32
SP484-5569	♦TFS	46 - 18
SP491	♦BEC	224 - 91
SP492	BEC	224 - 92
SP550	♦KODC	106 -100
SP651	♦KODC	106 -101
SP652	♦KODC	106 -102
SP-SKL	♦KODC	106 -103
SP-SKLT	♦KODC	106 -104
SPA1F	KODC	117 - 18
SPD102	♦SRPJ	138 - 63
SPD110	♦SRPJ	138 - 41
SPD111	♦SRPJ	138 - 40
SPD331	♦SRPJ	138 - 43
SPD500	♦SRPJ	138 - 49
SPD511T	♦SRPJ	138 - 57
SPD530	♦SRPJ	138 - 85
SPD541	♦SRPJ	138 - 39
SPD550	♦SRPJ	138 - 48
SPD570	♦SRPJ	138 - 60
SPDT1	♦SOL	122 - 38
SPDT2	♦SOL	122 - 39
SPDT3	♦SOL	122 - 40

Δ-Registered with JEDEC by this manufacturer

♦-Mfr's data sheet available in microfilm service

1. TYPE No. CROSS INDEX

IN TYPE NUMBER SEQUENCE

TYPE No.	MFRS	Pg&Line
SPDT4	♦SOL	122 - 41
SPG3431	♦STAJ	76 - 94
SPG3531SQR	♦STAJ	74 -105
SPG4632REC	♦STAJ	74 -101
SPG4652REC	♦STAJ	73 -108
SPG5531	♦STAJ	77 - 63
SPG5531REC	♦STAJ	74 - 95
SPG5531SQR	♦STAJ	69 - 40
SPG5532REC	♦STAJ	74 -102
SPG5532TRI	♦STAJ	75 - 1
SPG5551REC	♦STAJ	73 -109
SPG5551SQR	♦STAJ	74 - 4
SPG5552REC	♦STAJ	73 -110
SPG5552TRI	♦STAJ	74 - 20
SPG5556REC	♦STAJ	74 - 1
SPG5633	♦STAJ	77 - 64
SPG7851REC	♦STAJ	74 -103
SPI1	♦SOL	174 - 4
SPI2	♦SOL	174 - 5
SPI3	♦SOL	174 - 6
SPI4	♦SOL	174 - 7
SPI5	♦SOL	174 - 8
SPI6	♦SOL	174 - 9
SPI7	♦SOL	174 - 10
SPI204	♦TSEJ	155 - 26
SPI206	♦TSEJ	156 - 73
SPI208	♦TSEJ	156 - 74
SPI302	♦TSEJ	159 - 91
SPI304	♦TSEJ	159 - 74
SPM75-2	SOL	147 - 18
SPM75-4	SOL	147 - 23
SPM75-8	SOL	147 - 28
SPM75-16	SOL	147 - 32
SPM100-2	SOL	147 - 20
SPM100-4	SOL	147 - 24
SPM100-12	SOL	147 - 29
SPM100-24	SOL	147 - 36
SPM150-2	SOL	147 - 21
SPM150-3.6	SOL	147 - 22
SPM150-6	SOL	147 - 26
SPM150-12	SOL	147 - 30
SPM150-18	SOL	147 - 34
SPM150-36	SOL	147 - 38
SPM200-2	SOL	147 - 19
SPM200-6	SOL	147 - 39
SPM200-18	SOL	147 - 40
SPR1-08B	TOI	148 - 21
SPR1-08BPL	TOI	148 - 22
SPR1-08PL	TOI	148 - 23
SPR1-10B	TOI	148 - 81
SPR1-10BPL	TOI	148 - 82
SPR1-10PL	TOI	148 - 83
SPR2-08B	TOI	148 - 24
SPR2-08BPL	TOI	148 - 25
SPR2-08PL	TOI	148 - 26
SPR2-10B	TOI	148 - 84
SPR2-10BPL	TOI	148 - 85
SPR2-10PL	TOI	148 - 86
SPR3-08B	TOI	148 - 27
SPR3-08BPL	TOI	148 - 28
SPR3-08PL	TOI	148 - 29
SPR3-10B	TOI	148 - 87
SPR3-10BPL	TOI	148 - 88
SPR3-10PL	TOI	148 - 89
SPR4-08B	TOI	148 - 30
SPR4-08BPL	TOI	148 - 31
SPR4-08PL	TOI	148 - 32
SPR4-10B	TOI	148 - 90
SPR4-10BPL	TOI	148 - 91
SPR4-10PL	TOI	148 - 92
SPR5-08B	TOI	148 - 33
SPR5-08BPL	TOI	148 - 34
SPR5-08PL	TOI	148 - 35
SPR5-10B	TOI	148 - 93
SPR5-10BPL	TOI	148 - 94
SPR5-10PL	TOI	148 - 95
SPR6-08B	TOI	148 - 36
SPR6-08BPL	TOI	148 - 37
SPR6-08PL	TOI	148 - 38
SPR6-10B	TOI	148 - 96
SPR6-10BPL	TOI	148 - 97
SPR6-10PL	TOI	148 - 98
SPR7-08B	TOI	148 - 39
SPR7-08BPL	TOI	148 - 40
SPR7-08PL	TOI	148 - 41
SPR7-10B	TOI	148 - 99
SPR7-10BPL	TOI	148 -100
SPR7-10PL	TOI	148 -101
SPR8-08B	TOI	148 - 42
SPR8-08BPL	TOI	148 - 43
SPR8-08PL	TOI	148 - 44
SPR8-10B	TOI	148 -102
SPR8-10BPL	TOI	148 -103
SPR8-10PL	TOI	148 -104
SPR9-08B	TOI	148 - 45
SPR9-08BPL	TOI	148 - 46
SPR9-08PL	TOI	148 - 47
SPR9-10B	TOI	148 -105
SPR9-10BPL	TOI	148 -106
SPR9-10PL	TOI	148 -107
SPR10-08B	TOI	148 - 48
SPR10-08BPL	TOI	148 - 49
SPR10-08PL	TOI	148 - 50
SPR10-10B	TOI	148 -108
SPR10-10BPL	TOI	148 -109
SPR10-10PL	TOI	148 -110
SPR2201	♦STAJ	45 - 64
SPR2221	♦STAJ	45 - 65
SPR2434DEB	♦STAJ	41 - 72
SPR2531DEB	♦STAJ	43 - 23
SPR3431	♦STAJ	48 - 97
SPR3531SQR	♦STAJ	42 - 56
SPR4632REC	♦STAJ	42 - 50
SPR4652REC	♦STAJ	42 - 51
SPR5531	♦STAJ	51 - 50
SPR5531REC	♦STAJ	42 - 39
SPR5531SQR	♦STAJ	40 - 31
SPR5532REC	♦STAJ	42 - 52
SPR5532TRI	♦STAJ	42 - 68
SPR5551REC	♦STAJ	41 - 76
SPR5551SQR	♦STAJ	41 - 81
SPR5552REC	♦STAJ	41 - 77
SPR5552TRI	♦STAJ	41 - 87
SPR5556REC	♦STAJ	41 - 78
SPR5633	♦STAJ	50 - 83
SPR7851REC	♦STAJ	42 - 53
SPRG5111	♦STAJ	79 - 47
SPRY5111	♦STAJ	79 - 79
SPS103	♦TSEJ	118 - 74
SPT1	♦SOL	118 - 3
SPT2	♦SOL	118 - 4
SPT3	♦SOL	119 - 69
SPT4	♦SOL	119 - 70
SPT5	♦SOL	116 - 32
SPT6	♦SOL	117 - 19
SPT7	♦SOL	116 - 31
SPT8	♦SOL	116 - 33
SPT9	♦SOL	116 -104
SPT10	♦SOL	117 - 20
SPT11	♦SOL	118 - 5
SPT12	♦SOL	118 - 6
SPT13	♦SOL	118 - 7
SPT14	♦SOL	118 - 8
SPX1003-1	♦HON	164 - 48
SPX1003-2	♦HON	164 - 49
SPX1878-4	HON	115 - 20
SPX2003-1	♦HON	169 - 6
SPX2003-2	♦HON	169 - 7
SPX3033	HON	83 - 68
SPX3034	HON	119 - 1
SPY2201	♦STAJ	65 - 59
SPY2221	♦STAJ	65 - 60
SPY3431	♦STAJ	67 - 87
SPY4632REC	♦STAJ	66 - 43
SPY4652REC	♦STAJ	65 - 51
SPY5531	♦STAJ	67 -104
SPY5531REC	♦STAJ	66 - 39
SPY5532REC	♦STAJ	66 - 44
SPY5532TRI	♦STAJ	66 - 51
SPY5551REC	♦STAJ	65 - 52
SPY5552REC	♦STAJ	65 - 53
SPY5552TRI	♦STAJ	65 - 62
SPY5633	♦STAJ	67 -105
SR101C	♦NECJ	50 - 75
SR102(2)	♦NECJ	51 - 98
SR104D	♦NECJ	50 - 76
SR104DA	♦NECJ	44 - 34
SR106C	♦NECE	49 - 27
SR106D	♦NECE	49 - 28
SR110	♦NECJ	40 - 70
SR503C	♦NECE	52 - 8
SR503C(3)	♦NECJ	52 - 9
SR503D	♦NECE	48 - 98
SR503D(3)	♦NECJ	48 - 99
SR503W	♦NECE	48 -100
SR503W(3)	♦NECJ	48 -101
SR505C	♦NECE	49 -109
SR505D	♦NECE	46 - 41
SR505W	♦NECE	46 - 42
SR506C	♦NECE	46 - 43
	♦NECJ	
SR506C(1)	NECJ	43 - 38
SR506D	♦NECE	43 - 21
	♦NECJ	
SR506D(1)	NECJ	43 - 39
SR510(A)	NECJ	40 - 56
SR513C(A)	♦NECE	52 - 10
	NECJ	
SR513D(A)	♦NECE	48 -102
	NECJ	
SR513W(A)	♦NECE	48 -103
	NECJ	
SR525D	♦NECJ	44 - 46
SR531D	♦NECE	41 - 18
	♦NECJ	
SR533D	♦NECE	41 - 35
	NECJ	
SR535D	♦NECE	41 - 15
	♦NECJ	
SR536D	♦NECE	41 - 27
	♦NECJ	
SR537D	♦NECE	41 - 28
	♦NECJ	
SR538D	♦NECE	41 - 16
	♦NECJ	
SR539D	♦NECE	41 - 17
	♦NECJ	
SR540D	♦NECE	41 - 70
	♦NECJ	
SR603C	♦NECE	51 - 40
SR603C(3)	♦NECJ	51 - 41
SR603D	♦NECE	46 - 83
SR603D(3)	♦NECJ	46 - 84
SR603W	♦NECE	46 - 85
SR603W(3)	♦NECJ	46 - 86
SR605C	♦NECE	51 - 5
SR605D	♦NECE	48 - 86
SR605W	♦NECE	48 - 87
SR613C(A)	♦NECE	53 - 28
	NECJ	
SR613D(A)	♦NECE	51 - 42
	NECJ	
SR613W(A)	♦NECE	51 - 43
	NECJ	
SR615C(A)	♦NECE	52 - 65
	♦NECJ	
SR615D(A)	♦NECE	51 - 6
	♦NECJ	
SR615W(A)	♦NECE	51 - 7
	♦NECJ	
SR625D	♦NECJ	46 - 44
SR632D	♦NECE	43 - 27
	♦NECJ	
SR641D	♦NECJ	49 - 10
SR661D(A)	♦NECE	42 - 54
	♦NECJ	
SR662D	♦NECJ	46 - 71
SR663D(A)	♦NECJ	46 - 72
SS10	SOL	144 - 29
SS10-8	SOL	146 - 4
SS11	SOL	144 - 17
SS12	SOL	144 - 11
SS20	SOL	144 - 16
SS21	SOL	144 - 10
SS22	SOL	144 - 6
SS23	SOL	143 -110
SS30	SOL	144 - 36
SS31	SOL	144 - 25
SS35	SOL	144 - 48
SS40	SOL	144 - 34
SS50	SOL	144 - 18
SS100	♦SOL	144 - 19
SS200A	SOL	144 - 35
SS200B	SOL	144 - 41
SS200C	SOL	144 - 46
SS200D	SOL	144 - 47
SS300-1	♦SOL	143 -106
SS300-2	♦SOL	143 -107
SS300-3	♦SOL	143 -108
SS300-4	♦SOL	143 -109
SS400-1	♦SOL	138 - 24
SS400-2	♦SOL	138 - 25
SS400-3	♦SOL	137 - 87
SS400-4	♦SOL	137 - 88
SS400-5	♦SOL	137 - 89
SS400-6	♦SOL	137 - 84
SS400-7	♦SOL	137 - 85
SS500	SOL	138 - 71
SS750-10	♦SOL	151 - 48
SS750-20	♦SOL	151 -106
SS750-30	♦SOL	153 -109
SS750-40	♦SOL	151 - 49
SS750-50	♦SOL	151 -107
SS750-60	♦SOL	153 -110
SS755-10	♦SOL	152 - 53
SS755-20	♦SOL	154 - 35
SS755-30	♦SOL	156 - 44
SS755-40	♦SOL	152 - 54
SS755-50	♦SOL	154 - 36
SS755-60	♦SOL	156 - 45
SS760-10	♦SOL	151 - 50
SS760-20	♦SOL	151 -108
SS760-30	♦SOL	154 - 1
SS760-40	♦SOL	151 - 51
SS760-50	♦SOL	151 -109
SS760-60	♦SOL	154 - 2
SS765-10	♦SOL	152 - 55
SS765-20	♦SOL	154 - 37
SS765-30	♦SOL	156 - 46
SS765-40	♦SOL	152 - 56
SS765-50	♦SOL	154 - 38
SS765-60	♦SOL	156 - 47
SS2020G	♦SRPJ	144 - 55
SS9102	SOL	40 - 18
SS9104	SOL	46 - 15
SSB4-160	♦KODC	144 - 88
SSB4-210S	♦KODC	144 - 85
SSB6-210	♦KODC	144 - 93
SSB6-280L	♦KODC	144 - 95
SSB12-280L	♦KODC	144 -102
SSB-D4-210	♦KODC	144 - 86
SSC4-923	KODC	144 - 73
SSC5-4515	♦KODC	144 - 76
SSC5-4811	♦KODC	144 - 74
SSC5-8665	♦KODC	144 - 75
SSC5L1	♦KODC	144 - 67
SSC5L2	♦KODC	144 - 68
SSC8-85L	♦KODC	144 - 78
SSC8-85LH	♦KODC	144 - 84
SSC8-1010	♦KODC	144 - 79
SSC9-4515	♦KODC	144 - 83
SSC9-5815	♦KODC	144 - 80
SSC600	♦SOL	163 - 80
SSCD8-85LH	♦KODC	144 - 77
SSHR4-001	SOL	147 - 67
SSHR5-001	SOL	147 - 68
SSHR6-001	SOL	147 - 69
SSHR7-001	SOL	147 - 70
SSHR8-001	SOL	147 - 71
SSHR9-001	SOL	147 - 72
SSHR10-001	SOL	147 - 73
SSM333S	♦KODC	144 -103
SSOS700	♦SOL	156 -106
SSOS800	♦SOL	156 -107
SSR4-001	♦SOL	147 - 60
SSR5-001	♦SOL	147 - 61
SSR6-001	♦SOL	147 - 62
SSR7-001	♦SOL	147 - 63
SSR8-001	♦SOL	147 - 64
SSR9-001	♦SOL	147 - 65
SSR10-001	♦SOL	147 - 66
SSR10-002	♦SOL	147 - 59
SSW3/2N	♦KODC	144 - 65
SSW3/4N	♦KODC	144 - 64
SSW3/6N	♦KODC	144 - 63
SSW3N	♦KODC	144 - 66
ST1CL3H	♦KODC	116 - 87
ST1CL5	♦KODC	116 - 88
ST1KA	♦KODC	116 - 79
ST1KB	♦KODC	116 - 80
ST1KL3A	♦KODC	117 -101
ST1KL3B	♦KODC	117 -102
ST1KLA	♦KODC	117 -103
ST1KLB	♦KODC	117 -104
ST1MLA	♦KODC	116 - 81
ST1MLARII	♦KODC	116 - 82
ST1MLB	♦KODC	116 - 83
ST1MLBRII	♦KODC	116 - 84
ST7L	♦KODC	117 - 72
ST23F	♦CENB	116 - 89
	KODC	
ST100	STE	144 - 30
ST101	STE	144 - 22
ST102	STE	144 - 12
ST200	STE	144 - 20
ST201	STE	144 - 13
ST202	STE	144 - 7
ST203	STE	144 - 3
ST223-1	♦STE	145 - 77
ST223-2	♦STE	145 - 76
ST300	STE	144 - 42
ST301	STE	144 - 28
ST400	STE	144 - 39
ST400G	STE	144 - 54
ST410-1	STE	137 - 66
ST410-2	STE	137 - 71
ST410-3	STE	137 - 67
ST410-4	STE	137 - 78
ST410-5	STE	137 - 80
ST500	STE	144 - 21
ST555-1	STE	137 - 68
ST555-2	STE	137 - 75
ST555-3	STE	137 - 72
ST555-4	STE	137 - 82
ST555-5	STE	137 - 83
STA71	STE	129 - 42
STA71SS	STE	149 - 6
STA72	STE	129 - 43
STA73	♦STE	129 - 53
STA73SS	STE	149 - 10
STA74SS	STE	149 - 16
STCD0A	STE	155 - 68
STCD0B	STE	157 - 6
STCD0C	STE	157 - 77
STCD1A	STE	155 - 69
STCD1B	STE	157 - 7
STCD1C	STE	157 - 78
STCD2A	STE	155 - 70
STCD2B	STE	157 - 8
STCD2C	STE	157 - 79
STCT0A	STE	151 - 54
STCT0AD	STE	157 - 3
STCT0AE	STE	157 - 74
STCT0AG	STE	157 -100
STCT0B	STE	152 - 27
STCT0C	STE	154 - 6
STCT1A	STE	151 - 55
STCT1AD	STE	157 - 4
STCT1AE	STE	157 - 75
STCT1AG	STE	157 -101
STCT1B	STE	152 - 28
STCT1C	STE	154 - 7
STCT1S	STE	160 - 52
STCT2A	STE	151 - 56
STCT2AD	STE	157 - 5
STCT2AE	STE	157 - 76
STCT2AG	STE	157 -102
STCT2B	STE	152 - 29
STCT2C	STE	154 - 8
STCT2S	STE	160 - 53
STD1540-1	STE	107 - 67
STD1540-2	STE	107 - 69
STD1710-1	STE	107 - 64
STD1710-2	STE	107 - 65
STD1840-1	STE	107 - 62
STD1840-2	STE	107 - 63
STD1850-2	STE	107 - 71
STD1860-2	STE	107 - 72
STD2040-1	STE	107 - 73
STD2040-2	STE	107 - 70
STD2050-1	STE	107 - 7
STD2050-2	STE	107 - 8
STDD210	STE	107 - 9
STIN130T1	STE	154 - 34
STIN135D1	STE	155 - 9
STIN135D2	STE	152 - 89
STIN135T1	STE	151 - 74
STIN135T2	STE	151 - 29
STIN140T1	STE	155 - 67
STLD1500-1	STE	82 - 19
STLD1500-2	STE	82 - 44
STLD1500-3	STE	83 - 10
STLD1500-4	STE	84 - 7
STLD1600-1	STE	81 -109
STLD1600-2	STE	82 - 29
STLD1600-3	STE	82 -104
STLD1700-1	STE	82 - 30
STLD1700-2	STE	82 - 54
STLD1700-3	STE	83 - 77
STLD1700-4	STE	84 - 20
STLD1800-1	STE	83 - 88
STLD1800-2	STE	84 - 3
STLD1800-3	STE	84 - 41
STLD1900-1	STE	83 - 89
STLD1900-2	STE	84 - 65
STLD1900-3	STE	85 - 58
STLD2000-1	STE	82 - 96
STLD2000-2	STE	83 - 90
STLD2000-3	STE	84 - 75
STLD2100-1	STE	83 - 91
STLD2100-2	STE	84 - 66
STLD2100-3	STE	85 - 39
STN-EC9-080-080-060		
	♦STE	147 - 47
STN-EC9-200-080-060		
	♦STE	147 - 55
STN-EC9-200-100-060		
	♦STE	147 - 51
STN-EC12-080-080-060		
	♦STE	147 - 48
STN-EC12-200-080-060		
	♦STE	147 - 56
STN-EC12-200-100-060		
	♦STE	147 - 52
STN-EC080-080-060S		
	♦STE	145 - 64
STN-EC080-080-060W		
	♦STE	145 - 65
STN-EC200-080-060S		
	♦STE	145 - 71
STN-EC200-080-060W		
	♦STE	145 - 72
STN-EC200-100-060S		
	♦STE	145 - 67
STN-EC200-100-060W		
	♦STE	145 - 68
STOC1300	♦STE	169 - 23
STOC1400	STE	169 - 49
STOC1401	STE	169 - 50
STOC1402	STE	169 - 51
STOC1410	STE	174 - 11
STOC1411	STE	174 - 12
STOC1412	STE	174 - 13
STOC1420	STE	166 - 1
STOC1421	STE	166 - 3
STOC1422	STE	166 - 5
STOC1430	STE	166 - 2
STOC1431	STE	166 - 4
STOC1432	STE	166 - 6
STOC1500	STE	166 - 95
STOC1510	STE	166 - 96
STOC1520	STE	166 - 97
STOC1600	STE	166 - 98
STOC1700	STE	166 - 80
STOC1710	STE	166 - 81
STOC1720	STE	166 - 75
STOC1800	STE	166 - 82
STOC1900	STE	166 - 83
STOC2000	STE	166 - 76
STP-EC9-080-080-060		
	♦STE	147 - 49
STP-EC9-200-080-060		
	♦STE	147 - 57
STP-EC9-200-100-060		
	♦STE	147 - 53
STP-EC12-080-080-060		
	♦STE	147 - 50
STP-EC12-200-080-060		
	♦STE	147 - 58
STP-EC12-200-100-060		
	♦STE	147 - 54
STP-EC080-080-060S		
	♦STE	145 - 66
STP-EC080-080-060W		
	♦STE	145 - 75
STP-EC200-080-060S		
	♦STE	145 - 73
STP-EC200-080-060W		
	♦STE	145 - 74
STP-EC200-100-060S		
	♦STE	145 - 69
STP-EC200-100-060W		
	♦STE	145 - 70
STPD1510-1	STE	121 - 36
STPD1510-2	STE	121 - 74
STPD1510-3	STE	121 -105
STPD1510-4	STE	122 - 15
STPD1610-1	STE	121 - 58
STPD1610-2	STE	121 - 93
STPD1610-3	STE	122 - 10
STPD1810-1	STE	121 - 39
STPD1810-2	STE	121 - 82
STPD1810-3	STE	122 - 3
STPD1810-4	STE	122 - 20
STPD2010-1	STE	121 - 70
STPD2010-2	STE	121 -106
STPD2010-3	STE	122 - 16
STPT40	STE	117 - 68
STPT60	♦STE	116 - 72
STPT61	♦STE	116 - 73
STPT62	♦STE	118 - 34
STPT63	♦STE	119 - 2
STPT64	♦STE	119 - 60
STPT100	♦STE	115 - 94
STPT100A	♦STE	117 - 41
STPT100B	♦STE	117 - 86
STPT110	♦STE	115 - 95
STPT110A	♦STE	116 - 94
STPT110B	♦STE	117 - 6
STPT120	♦STE	116 - 15
STPT120A	♦STE	117 - 91
STPT120B	♦STE	118 - 13
STPT130	♦STE	116 - 16
STPT130A	♦STE	117 - 13
STPT130B	♦STE	117 - 78
STPT225P	♦STE	115 - 97
STPT240P	♦STE	116 - 13
STPT260	♦STE	116 - 65
STPT260P	♦STE	117 - 30
STPT260Q	STE	120 - 21
STPT300	♦STE	117 - 21
STPT310	♦STE	118 - 88
STPT1520-1	STE	116 -105
STPT1520-2	STE	117 -100
STPT1520-3	STE	118 - 73
STPT1520-4	STE	119 - 36
STPT1530-1	STE	116 - 58
STPT1530-2	STE	118 - 35
STPT1530-3	STE	119 - 3
STPT1630-1	STE	117 - 60

Δ-Registered with JEDEC by this manufacturer

♦-Mfr's data sheet available in microfilm service

1. TYPE No. CROSS INDEX

IN TYPE NUMBER SEQUENCE

TYPE No.	MFRS	Pg&Line
STPT1630-2	STE	119 - 4
STPT1630-3	STE	119 - 79
STPT1630-4	STE	119 -100
STPT1820-1	STE	116 - 6
STPT1820-2	STE	116 - 98
STPT1820-3	STE	117 - 82
STPT1820-4	STE	118 - 44
STPT1830-1	STE	116 - 34
STPT1830-2	STE	117 - 23
STPT1830-3	STE	118 - 10
STPT2030-1	STE	118 - 11
STPT2030-2	STE	118 - 89
STPT2030-3	STE	119 - 71
STRD70	STE	159 - 83
STRD70F	STE	159 - 84
STRT850	♦STE	159 -101
STRT850A	♦STE	159 - 85
STRT850AF	♦STE	159 - 86
STRT850B	♦STE	159 - 87
STRT850BF	♦STE	159 - 88
STRT850F	♦STE	159 - 64
STRT900-1	STE	159 - 70
STRT910-2	STE	159 -100
STRT920-3	STE	160 - 35
STSKL	♦KODC	115 - 74
STSKLT	♦KODC	116 -110
SVAD1	♦SOL	40 - 19
SVAD2	♦SOL	40 - 20
SVAD3	♦SOL	40 - 28
SVAD4	♦SOL	40 - 21
SVD101	♦SOL	47 - 64
SVD102	♦SOL	47 - 67
SVD103	♦SOL	46 - 27
SVD104	♦SOL	47 - 68
SVD105	♦SOL	47 - 65
SVD106	♦SOL	47 - 66
SVD201	♦SOL	72 - 91
SVD202	♦SOL	72 -103
SVD203(2)	♦SOL	71 - 68
SVD204	♦SOL	72 - 94
SVD350C	♦SOL	51 - 86
SX10LB	♦VAC	139 - 47
SX135-5	♦CRS	213 - 44
SX135-6	♦CRS	213 - 45
SX135G	♦CRS	213 - 46
SX135M	CRS	213 - 47
SX135X	CRS	213 - 48
SX139-5	CRS	210 - 48
SX139G	CRS	210 - 49
SX139M	CRS	210 - 50
SX139X	CRS	210 - 51
SX140-5	♦CRS	212 - 22
SX140-6	♦CRS	211 - 10
SX140G	♦CRS	212 - 23
SX140M	CRS	212 - 24
SX140X	CRS	212 - 25
SX147-5	♦CRS	220 -100
SX147-6	♦CRS	220 -101
SX147G	♦CRS	220 -102
SX147M	CRS	220 -103
SX147X	CRS	220 -104
SX162-5	♦CRS	214 - 88
SX162-6	♦CRS	206 - 66
SX162G	♦CRS	214 - 89
SX162M	CRS	214 - 90
SX162X	CRS	214 - 91
SX165-5	CRS	212 - 69
SX165G	CRS	212 - 70
SX165M	CRS	212 - 71
SX165X	CRS	212 - 72
SX172-5	♦CRS	213 - 24
SX172-6	♦CRS	211 - 67
SX172G	♦CRS	213 - 25
SX172M	CRS	213 - 26
SX172X	CRS	213 - 27
SX177-5	CRS	212 - 26
SX177-6	CRS	212 - 27
SX177G	CRS	212 - 28
SX177M	CRS	212 - 29
SX177X	CRS	212 - 30
SX179-5	♦CRS	217 - 39
SX179-6	♦CRS	217 - 40
SX179G	♦CRS	217 - 41
SX179M	CRS	217 - 42
SX179X	CRS	217 - 43
SX180-5	CRS	213 -105
SX180G	CRS	214 - 1
SX180M	CRS	214 - 2
SX180X	CRS	214 - 3
SX181-5	♦CRS	215 - 71
SX181-6	♦CRS	215 - 72
SX181G	♦CRS	215 - 73
SX181M	CRS	215 - 74
SX181X	CRS	215 - 75
SX190-5	CRS	212 - 3
SX190G	CRS	212 - 4
SX190M	CRS	212 - 5
SX190X	CRS	212 - 6
SX200-5	CRS	210 - 80
SX200G	CRS	210 - 81
SX200M	CRS	210 - 82
SX200X	CRS	210 - 83
SX208-5	♦CRS	221 - 17
SX208-6	♦CRS	221 - 18
SX208G	♦CRS	221 - 14
SX208M	CRS	221 - 15
SX208X	CRS	221 - 16
SX217-5	CRS	220 - 24
SX217G	CRS	220 - 25
SX217M	CRS	220 - 26
SX217X	CRS	220 - 27
SX218-5	CRS	220 - 46
SX218G	CRS	220 - 47
SX218M	CRS	220 - 48

TYPE No.	MFRS	Pg&Line
SX218X	CRS	220 - 49
SX221-5	CRS	220 -105
SX221G	CRS	220 -106
SX221M	CRS	220 -107
SX221X	CRS	220 -108
SX227-5	CRS	220 - 10
SX227G	CRS	220 - 11
SX227M	CRS	220 - 12
SX227X	CRS	220 - 13
SX228-5	CRS	220 - 3
SX228G	CRS	220 - 4
SX228M	CRS	220 - 5
SX228X	CRS	220 - 6
SX262-5	CRS	210 - 6
SX262G	CRS	210 - 7
SX262M	CRS	210 - 8
SX262X	CRS	210 - 9
SX287-5	CRS	221 - 61
SX287G	CRS	221 - 62
SX287M	CRS	221 - 63
SX287X	CRS	221 - 64
SX296-5	CRS	220 -109
SX296G	CRS	220 -110
SX296M	CRS	221 - 1
SX296X	CRS	221 - 2
SX318-5	CRS	216 - 86
SX318G	CRS	216 - 87
SX318M	CRS	216 - 88
SX318X	CRS	216 - 89
SX376-5	CRS	221 - 65
SX376G	CRS	221 - 66
SX376M	CRS	221 - 67
SX376X	CRS	221 - 68
SX377-5	CRS	216 - 91
SX377G	CRS	216 - 92
SX377M	CRS	216 - 93
SX377X	CRS	216 - 94
SX399-5	CRS	220 - 68
SX399G	CRS	220 - 69
SX399M	CRS	220 - 70
SX399X	CRS	220 - 71
SX402-5	CRS	222 - 36
SX402G	CRS	222 - 37
SX402M	CRS	222 - 38
SX402X	CRS	222 - 39
SX406-5	CRS	214 - 56
SX406G	CRS	214 - 57
SX406M	CRS	214 - 58
SX406X	CRS	214 - 59
SX416-5	CRS	220 - 51
SX416G	CRS	220 - 52
SX416M	CRS	220 - 53
SX416X	CRS	220 - 54
SX423-5	CRS	220 - 42
SX423G	CRS	220 - 43
SX423M	CRS	220 - 44
SX423X	CRS	220 - 45
SX440-5	CRS	212 - 31
SX440G	CRS	212 - 32
SX440M	CRS	212 - 33
SX440X	CRS	212 - 34
SX441-5	CRS	210 - 10
SX441G	CRS	210 - 11
SX441M	CRS	210 - 12
SX441X	CRS	210 - 13
SX454-5	CRS	221 - 69
SX454G	CRS	221 - 70
SX454M	CRS	221 - 71
SX454X	CRS	221 - 72
SX459-5	CRS	219 - 80
SX459G	CRS	219 - 81
SX459M	CRS	219 - 82
SX459X	CRS	219 - 83
SX469-5	CRS	221 - 10
SX469G	CRS	221 - 11
SX469M	CRS	221 - 12
SX469X	CRS	221 - 13
SX471-5	CRS	221 - 20
SX471G	CRS	221 - 21
SX471M	CRS	221 - 22
SX471X	CRS	221 - 23
SX473-5	CRS	222 - 93
SX473G	CRS	222 - 94
SX473M	CRS	222 - 95
SX473X	CRS	222 - 96
SX474-5	CRS	222 - 78
SX474G	CRS	222 - 79
SX474M	CRS	222 - 80
SX474X	CRS	222 - 81
SX475-5	CRS	222 - 59
SX475G	CRS	222 - 60
SX475M	CRS	222 - 61
SX475X	CRS	222 - 62
SX476-5	CRS	222 - 89
SX476G	CRS	222 - 90
SX476M	CRS	222 - 91
SX476X	CRS	222 - 92
SX481-5	CRS	208 - 74
SX481G	CRS	208 - 75
SX481M	CRS	208 - 76
SX481X	CRS	208 - 77
SX518G	♦CRS	207 - 29
SX518H	♦CRS	207 - 30
SX519G	♦CRS	207 - 39
SX519H	♦CRS	207 - 40
SX526G	♦CRS	220 - 20
SX526H	♦CRS	220 - 21
SX585G	♦CRS	207 - 31
SX585H	♦CRS	207 - 32
SX586G	♦CRS	207 - 41
SX586H	♦CRS	207 - 42
SX616G	♦CRS	220 - 22
SX616H	♦CRS	220 - 23
SY403DA	♦NECE	58 - 28

TYPE No.	MFRS	Pg&Line
SY403DA(3)(A)		58 - 33
	♦NECJ	
SY403TA	♦NECE	59 - 19
SY403TA(3)(A)		59 - 21
	♦NECJ	
SY404D	♦NECJ	58 - 41
SY404T	♦NECJ	59 - 15
SY405D	♦NECE	58 - 42
SY405T	♦NECE	59 - 16
SY406D	♦NECE	56 - 21
	♦NECJ	
SY406D(1)	NECJ	61 - 82
SY406T	♦NECE	58 - 29
	♦NECJ	
SY413D(A)	♦NECE	59 - 6
	NECJ	
SY413T(A)	♦NECE	59 - 70
	NECJ	
SY415D	♦NECE	59 - 59
	♦NECJ	
SY415T	♦NECE	59 - 99
	♦NECJ	
SY425D	♦NECJ	55 - 76
SY431D	♦NECE	55 - 66
	♦NECJ	
SY432D	♦NECE	55 - 73
	♦NECJ	
SY435D	♦NECE	55 - 67
	♦NECJ	
SY436D	♦NECE	55 - 74
	♦NECJ	
SY437D	♦NECE	55 - 75
	♦NECJ	
SY438D	♦NECE	55 - 68
	♦NECJ	
SY439D	♦NECE	55 - 69
	♦NECJ	
SY440D	♦NECE	56 - 79
	♦NECJ	
SY441D	♦NECJ	58 - 69
SY461D(A)	♦NECE	55 -109
	♦NECJ	
SY462D(A)	♦NECJ	57 - 95
SY463D(A)	♦NECJ	57 - 1
SY913D	♦NECJ	67 -101
SY913T	♦NECJ	68 - 80
SY915D	♦NECJ	66 - 91
SY915T	♦NECJ	66 - 92
SY925D	♦NECJ	60 - 82
SY941D	♦NECJ	66 - 46
T300-1	♦BAR	106 - 68
T300-2	♦BAR	106 - 69
T300-3	♦BAR	106 - 70
T300-4	♦BAR	106 - 71
T300-5	♦BAR	106 - 64
T300-6	♦BAR	106 - 65
T300-7	♦BAR	106 - 66
T300-8	♦BAR	106 - 67
T300-9	♦BAR	106 - 58
T300-10	♦BAR	106 - 59
T300-11	♦BAR	106 - 60
T300-12	♦BAR	106 - 61
T300-13	♦BAR	106 - 62
T300-14	♦BAR	106 - 63
T5135-5	♦CRS	218 - 67
T5135-6	♦CRS	218 - 68
T5135G	♦CRS	218 - 69
T5135M	CRS	218 - 70
T5135X	CRS	218 - 71
T5140-5	♦CRS	218 -108
T5140-6	♦CRS	218 -109
T5140G	♦CRS	218 -110
T5140M	CRS	219 - 1
T5140X	CRS	219 - 2
T5145-5	♦CRS	219 - 3
T5145-6	♦CRS	219 - 4
T5145G	♦CRS	219 - 5
T5145M	CRS	219 - 6
T5145X	CRS	219 - 7
T21104(2)	♦SAM	233 - 54
TC102	♦TII	233 - 4
TC103	♦TII	233 - 5
TC104	♦TII	233 - 6
TCN1000-3	♦EGG	124 - 76
TCN1000-12	♦EGG	124 - 77
TCN1000-93	♦EGG	124 - 78
TCST1000	♦ALGG	153 - 73
TCST1001	♦ALGG	155 - 27
TCST1103	♦ALGG	157 - 27
TCST1104	♦ALGG	157 - 71
TCST1202	♦ALGG	156 - 75
TCST1203	♦ALGG	157 - 28
TCST1300	♦ALGG	153 - 74
TCST1301	♦ALGG	155 - 28
TCST2000	♦ALGG	153 - 75
TCST2001	♦ALGG	155 - 29
TCST2103	♦ALGG	157 - 29
TCST2104	♦ALGG	157 - 72
TCST2202	♦ALGG	156 - 76
TCST2203	♦ALGG	157 - 30
TCST2300	♦ALGG	153 - 76
TCST2301	♦ALGG	155 - 30
TCST3000	♦ALGG	153 - 77
TCST3001	♦ALGG	155 - 31
TCST3103	♦ALGG	157 - 31
TCST3104	♦ALGG	157 - 73
TCST3202	♦ALGG	156 - 77
TCST3203	♦ALGG	157 - 32
TCST3300	♦ALGG	153 - 78
TCST3301	♦ALGG	155 - 32
TCST4000	♦ALGG	153 - 79
TCST4001	♦ALGG	155 - 33
TCZS8000	♦ALGG	159 - 30
TCZS8010	♦ALGG	159 - 31

TYPE No.	MFRS	Pg&Line
TCZT8000(A)	♦ALGG	159 - 14
TCZT8001(A)	♦ALGG	159 - 18
TCZT8012	♦ALGG	159 - 24
TCZT8013	♦ALGG	159 - 25
TCZT8020	♦ALGG	159 - 15
TCZT8021	♦ALGG	159 - 19
TD24	MER	99 - 8
TD25	MER	99 - 9
TD31	♦MER	108 -104
TD100(1)	♦MER	236 - 19
TD200(1)	♦MER	236 - 20
TD201(2A)	♦MER	231 - 26
TDAG4100	♦ALGG	90 - 74
TDAG8100	♦ALGG	91 - 12
TDAR4100	♦ALGG	90 - 35
TDAR8100	♦ALGG	90 -100
TDAY4100	♦ALGG	90 - 59
TDAY8100	♦ALGG	91 - 4
TDDG5250	♦ALGG	190 - 53
TDDG5260	♦ALGG	190 - 54
TDDO5250	♦ALGG	190 - 55
TDDO5260	♦ALGG	190 - 56
TDDR5250	♦ALGG	190 - 50
TDDR5260	♦ALGG	190 - 51
TDDY5250	♦ALGG	190 - 57
TDDY5260	♦ALGG	190 - 58
TDSG4130	♦ALGG	185 - 21
TDSG4150	♦ALGG	185 - 22
TDSG4160	♦ALGG	185 - 23
TDSG5150	♦ALGG	190 - 43
TDSG5160	♦ALGG	190 - 44
TDSL1150	♦ALGG	177 - 3
TDSL1160	♦ALGG	177 - 4
TDSL3150	♦ALGG	177 - 5
TDSL3160	♦ALGG	177 - 6
TDSL5150	♦ALGG	190 - 35
TDSL5160	♦ALGG	177 - 7
TDSO4130	♦ALGG	185 - 24
TDSO4150	♦ALGG	185 - 25
TDSO4160	♦ALGG	185 - 26
TDSO5150	♦ALGG	190 - 45
TDSO5160	♦ALGG	190 - 46
TDSR4130	♦ALGG	184 - 84
TDSR4150	♦ALGG	184 - 85
TDSR4160	♦ALGG	184 - 86
TDSR5150	♦ALGG	190 - 36
TDSR5160	♦ALGG	190 - 37
TDSY4130	♦ALGG	185 - 27
TDSY4150	♦ALGG	185 - 28
TDSY4160	♦ALGG	185 - 29
TDSY5150	♦ALGG	190 - 47
TDSY5160	♦ALGG	190 - 48
TEMD2100	♦ALGG	105 - 65
TEMT2100	♦ALGG	116 - 1
TEYT5500	♦ALGG	115 - 49
TIEF150	♦TOI	233 - 55
TIEF151	♦TOI	233 - 56
TIEF152	♦TOI	233 - 57
TIES06	♦TOI	83 - 3
TIES13	♦TOI	87 - 74
TIES14	♦TOI	88 - 63
TIES15	♦TOI	88 - 13
TIES16A	♦TOI	88 - 70
TIES27	♦TOI	87 - 38
TIES35	♦TOI	83 - 30
TIL38	FSC	86 - 17
TIL64	♦TII	116 - 23
TIL81HR2	♦TII	119 - 18
TIL100(A)	♦FSC	104 - 16
TIL102	♦TII	164 - 77
TIL103	♦TII	164 - 81
TIL111	MOTA	165 - 13
	♦TII	
TIL112	MOTA	165 - 11
	♦TII	
TIL113	♦MOTA	169 - 25
	♦TII	
TIL114	MOTA	165 - 71
	♦TII	
TIL115	MOTA	165 - 68
	♦TII	
TIL116	♦MOTA	165 - 74
	♦TII	
TIL117	♦MOTA	165 - 78
	♦TII	
TIL118	♦MOTA	165 - 12
	♦TII	
TIL119	♦MOTA	169 - 26
	♦TII	
TIL119A	♦TII	169 - 27
TIL120	♦TII	164 - 78
TIL121	♦TII	164 - 80
TIL124	MOTA	166 - 84
	♦TII	
TIL125	MOTA	166 - 89
	♦TII	
TIL126	MOTA	166 - 92
	♦TII	
TIL127	MOTA	169 - 66
	♦TII	
TIL128	MOTA	169 - 67
	♦TII	
TIL128A	♦TII	169 - 68
TIL149	♦HON	159 - 67
TIL153	MOTA	166 - 16
	♦TII	
TIL154	MOTA	166 - 17
	♦TII	
TIL155	MOTA	166 - 18
	♦TII	
TIL156	MOTA	169 - 55
	♦TII	
TIL157	MOTA	169 - 56
	♦TII	

TYPE No.	MFRS	Pg&Line
TIL157A	♦TII	169 - 57
TIL181	♦TII	166 - 23
TIL212-1	♦FSC	62 - 89
TIL212-2	♦FSC	65 - 64
TIL232-1	♦FSC	71 - 11
TIL232-2	♦FSC	73 - 64
TIL302	♦TII	176 - 92
TIL302A	♦TII	176 - 93
TIL303	♦TII	176 - 94
TIL303A	♦TII	176 - 95
TIL304	♦TII	176 - 96
TIL304A	♦TII	176 - 97
TIL305	♦TII	200 - 33
TIL306	♦TII	201 - 56
TIL306A	♦TII	201 - 57
TIL307	♦TII	201 - 58
TIL307A	♦TII	201 - 59
TIL308	♦TII	201 - 60
TIL308A	♦TII	201 - 61
TIL309	♦TII	201 - 62
TIL309A	♦TII	201 - 63
TIL311	♦TII	201 - 54
TIL311A	♦TII	201 - 55
TIL322A	MPS	187 - 74
TIL330A	MPS	186 - 98
TIL601	♦TII	116 - 74
TIL602	♦TII	118 - 36
TIL603	♦TII	119 - 5
TIL604	♦TII	119 - 61
TIL604HR2	♦TII	119 - 62
TL38-4	♦MER	84 - 61
TLAO5400	♦ALGG	56 -110
TLAO5401	♦ALGG	58 - 57
TLAO5402	♦ALGG	58 - 10
TLAO5403	♦ALGG	58 - 58
TLAR5400	♦ALGG	42 - 44
TLAR5401	♦ALGG	46 - 47
TLAR5402	♦ALGG	42 - 45
TLAR5403	♦ALGG	44 - 83
TLAY5400	♦ALGG	61 - 1
TLAY5401	♦ALGG	63 - 5
TLAY5402	♦ALGG	62 - 35
TLAY5403	♦ALGG	63 - 6
TLBG5400	♦ALGG	72 -106
TLBG5410	♦ALGG	72 - 31
TLBO5160	♦ALGG	59 - 56
TLBO5400	♦ALGG	58 - 52
TLBO5410	♦ALGG	58 - 53
TLBR5400	♦ALGG	44 - 32
TLBR5410	♦ALGG	44 - 33
TLBV5380	♦ALGG	79 - 96
TLBY5400	♦ALGG	63 - 72
TLBY5410	♦ALGG	63 - 73
TLFG1110	♦ALGG	89 - 49
TLFG2100	♦ALGG	89 - 89
TLFG2110	♦ALGG	89 - 90
TLFG3100	♦ALGG	90 - 19
TLFO2100	♦ALGG	89 - 71
TLFO3100	♦ALGG	90 - 8
TLFR1110	♦ALGG	89 - 34
TLFR2100	♦ALGG	89 - 57
TLFR2110	♦ALGG	89 - 60
TLFR3100	♦ALGG	89 -106
TLFY1110	♦ALGG	89 - 44
TLFY2100	♦ALGG	89 - 78
TLFY2110	♦ALGG	89 - 79
TLFY3100	♦ALGG	90 - 13
TLG102A	TOSA	71 - 89
	♦TOSJ	
TLG102KW	♦TOSJ	69 - 87
TLG108A	TOSA	73 - 68
	♦TOSJ	
TLG113A	♦IMTM	75 - 60
TOSA	♦TOSJ	
TLG114A	♦IMTM	71 - 91
TOSA	TOSJ	
TLG115	♦TOSJ	75 - 58
TLG115A	TOSA	73 - 70
	♦TOSJ	
TLG121	TOSJ	71 - 3
TLG122	TOSJ	71 - 4
TLG123A	♦IMTM	69 - 47
TOSA	TOSJ	
TLG124A	♦IMTM	71 - 85
TOSA	TOSJ	
TLG132	♦TOSJ	77 - 44
TLG143	♦IMTM	78 - 27
	TOSA	
TLG144	TOSA	76 - 24
	♦TOSJ	
TLG145	♦IMTM	77 - 68
	TOSA	
TLG147	TOSA	73 - 69
	♦TOSJ	
TLG153	TOSA	77 - 94
	♦TOSJ	
TLG154	♦IMTM	78 - 25
	TOSA	
TLG163	♦IMTM	77 -102
	TOSA	
TLG164	TOSA	76 - 45
	♦TOSJ	
TLG205	♦IMTM	70 - 82
	TOSJ	
TLG205-5	♦TOSJ	92 - 75
TLG206	♦IMTM	70 - 79
	TOSJ	
TLG207	♦IMTM	70 - 85
	TOSJ	
TLG208	♦IMTM	70 - 83
	TOSJ	
TLG208-5	♦TOSJ	92 - 69
TLG209	♦IMTM	71 - 82
	♦TOSJ	

Δ-Registered with JEDEC by this manufacturer

♦-Mfr's data sheet available in microfilm service

1. TYPE No. CROSS INDEX

IN TYPE NUMBER SEQUENCE

TYPE No.	MFRS	Pg&Line
TLG210	♦IMTM	71 - 83
	TOSJ	
TLG211	♦TOSJ	71 - 5
TLG226	♦IMTM	69 - 52
	TOSJ	
TLG250	♦IMTM	73 -104
	♦TOSJ	
TLG251	♦TOSJ	73 - 91
TLG253	TOSJ	76 - 56
TLG306	TOSA	194 - 21
	♦TOSJ	
TLG307	TOSA	182 - 38
	♦TOSJ	
TLG308	TOSA	194 - 22
	♦TOSJ	
TLG309	TOSA	182 - 39
	♦TOSJ	
TLG312A	TOSA	182 - 2
	♦TOSJ	
TLG313A	TOSA	182 - 3
	♦TOSJ	
TLG314A	TOSA	181 -108
	♦TOSJ	
TLG315A	TOSA	181 -109
	♦TOSJ	
TLG320	TOSA	184 - 25
	TOSJ	
TLG321	TOSA	184 - 26
	TOSJ	
TLG324	TOSA	188 - 46
	TOSJ	
TLG325	TOSA	188 - 47
	TOSJ	
TLG326	TOSA	186 - 87
	TOSJ	
TLG327	TOSA	186 - 88
	TOSJ	
TLG328	TOSA	191 - 15
	TOSJ	
TLG329	TOSA	191 - 16
	TOSJ	
TLG332	TOSA	177 - 95
	TOSJ	
TLG333	TOSA	178 -101
	TOSJ	
TLG342	TOSA	185 - 36
	TOSJ	
TLG343	TOSA	185 - 37
	TOSJ	
TLG344	TOSA	185 - 38
	TOSJ	
TLG345	TOSA	185 - 39
	TOSJ	
TLG352	TOSA	187 - 24
	TOSJ	
TLG353	TOSA	187 - 25
	TOSJ	
TLG358	TOSA	190 -101
	TOSJ	
TLG359	TOSA	190 -102
	TOSJ	
TLG362	TOSA	192 - 4
	♦TOSJ	
TLG363	TOSA	192 - 5
	♦TOSJ	
TLG364	TOSA	191 - 58
	♦TOSJ	
TLG365	TOSA	192 - 6
	♦TOSJ	
TLG366	TOSA	192 - 83
	♦TOSJ	
TLG367	TOSA	192 - 84
	♦TOSJ	
TLG368	TOSA	190 -103
	TOSJ	
TLG369	TOSA	190 -104
	TOSJ	
TLG370	TOSA	199 - 27
	♦TOSJ	
TLG371	TOSA	199 - 28
	♦TOSJ	
TLG380	TOSA	199 - 4
	♦TOSJ	
TLG2057A	TOSA	198 - 36
	♦TOSJ	
TLG2087A	TOSA	198 - 37
	♦TOSJ	
TLG2098A	TOSA	196 - 22
	♦TOSJ	
TLG2110	TOSA	181 - 24
	TOSJ	
TLG2120	TOSA	181 - 25
	TOSJ	
TLG2130	TOSJ	176 - 73
TLG2140	TOSJ	176 - 74
TLG2168	TOSA	195 - 63
	TOSJ	
TLG2198	TOSA	194 -108
	♦TOSJ	
TLG2218	TOSA	195 - 64
	TOSJ	
TLG2229	TOSA	194 -109
	TOSJ	
TLG2231	TOSA	194 -110
	♦TOSJ	
TLG2259	TOSA	195 - 1
	♦TOSJ	
TLG2268	TOSA	195 - 2
	♦TOSJ	
TLG2281	TOSA	195 - 3
	♦TOSJ	
TLG2399	♦TOSJ	196 -109
TLG3010	TOSA	196 - 23
	♦TOSJ	

TYPE No.	MFRS	Pg&Line
TLG4052A	TOSA	198 - 38
	TOSJ	
TLG4082A	TOSA	198 - 39
	TOSJ	
TLG4093A	TOSA	196 - 24
	TOSJ	
TLG4115	TOSA	181 - 26
	TOSJ	
TLG4125	TOSA	181 - 27
	TOSJ	
TLG4135	TOSJ	176 - 75
TLG4145	TOSJ	176 - 76
TLG4163	TOSA	195 - 65
	TOSJ	
TLG4172	TOSA	196 - 25
	TOSJ	
TLG4192	TOSA	195 - 4
	♦TOSJ	
TLG4202	TOSA	196 - 26
	TOSJ	
TLG4213	TOSA	195 - 66
	TOSJ	
TLG4224	TOSA	195 - 5
	TOSJ	
TLG4236	TOSA	195 - 6
	♦TOSJ	
TLG4243	TOSA	196 - 27
	♦TOSJ	
TLG4243A	TOSJ	196 - 28
TLG4254	TOSA	195 - 7
	♦TOSJ	
TLG4262	TOSA	195 - 8
	♦TOSJ	
TLG4286	TOSA	195 - 9
	♦TOSJ	
TLG4393	♦TOSJ	196 -110
TLG5001	♦TOSJ	184 - 65
TLG5002	♦TOSJ	184 - 66
TLG8051	TOSJ	94 - 10
TLG8101	♦IMTM	92 - 58
	TOSJ	
TLHG0400(A)	♦ALGG	75 - 17
TLHG4100	♦ALGG	76 - 87
TLHG4101	♦ALGG	77 - 36
TLHG4102	♦ALGG	77 - 37
TLHG4103	♦ALGG	77 - 77
TLHG4105	♦ALGG	77 - 78
TLHG4200	♦ALGG	75 -104
TLHG5100	♦ALGG	77 - 41
TLHG5101	♦ALGG	77 - 79
TLHG5102	♦ALGG	77 - 80
TLHG5103	♦ALGG	77 -110
TLHG5105	♦ALGG	78 - 1
TLHG5200	♦ALGG	76 - 88
TLHG5600	♦ALGG	71 - 45
TLHG6400	♦ALGG	74 - 43
TLHR4100	♦ALGG	52 - 6
TLHR4101	♦ALGG	52 - 86
TLHR4102	♦ALGG	52 - 87
TLHR4103	♦ALGG	53 - 24
TLHR4105	♦ALGG	53 - 25
TLHR4200	♦ALGG	50 - 82
TLHR4600(A)	♦ALGG	44 - 85
TLHR5100	♦ALGG	53 - 29
TLHR5101	♦ALGG	53 - 84
TLHR5102	♦ALGG	53 - 85
TLHR5103	♦ALGG	54 - 40
TLHR5105	♦ALGG	54 - 41
TLHR5400	♦ALGG	46 - 96
TLHR5600	♦ALGG	42 - 62
TLHR6200	♦ALGG	52 - 12
TLHR6400	♦ALGG	46 - 97
TLHR8400	♦ALGG	49 - 35
TLHY0400	♦ALGG	79 - 81
TLHY4100	♦ALGG	66 - 67
TLHY4101	♦ALGG	67 - 11
TLHY4102	♦ALGG	67 - 12
TLHY4103	♦ALGG	67 - 65
TLHY4105	♦ALGG	67 - 66
TLHY4200	♦ALGG	65 - 86
TLHY4201	♦ALGG	66 - 68
TLHY4202	♦ALGG	66 - 69
TLHY4203	♦ALGG	67 - 13
TLHY4205	♦ALGG	67 - 14
TLHY4400	♦ALGG	67 - 58
TLHY4401	♦ALGG	67 - 59
TLHY4402	♦ALGG	67 - 60
TLHY4403	♦ALGG	67 - 61
TLHY4405	♦ALGG	66 - 70
TLHY4600(A)	♦ALGG	62 - 38
TLHY4601(A)	♦ALGG	63 - 24
TLHY4602(A)	♦ALGG	63 - 25
TLHY4603(A)	♦ALGG	64 -102
TLHY4605(A)	♦ALGG	64 -103
TLHY5100	♦ALGG	67 - 70
TLHY5101	♦ALGG	68 - 2
TLHY5102	♦ALGG	68 - 3
TLHY5103	♦ALGG	68 - 41
TLHY5105	♦ALGG	68 - 42
TLHY5200	♦ALGG	66 - 73
TLHY5201	♦ALGG	67 - 15
TLHY5202	♦ALGG	67 - 16
TLHY5203	♦ALGG	67 - 71
TLHY5205	♦ALGG	67 - 72
TLHY5400	♦ALGG	63 - 30
TLHY5401	♦ALGG	64 -104
TLHY5402	♦ALGG	64 -105
TLHY5403	♦ALGG	65 - 91
TLHY5405	♦ALGG	66 - 74
TLHY5600	♦ALGG	61 - 26
TLHY5601	♦ALGG	62 - 39
TLHY5602	♦ALGG	67 - 17
TLHY5603	♦ALGG	63 - 31
TLHY5605	♦ALGG	63 - 32

TYPE No.	MFRS	Pg&Line
TLHY6200	♦ALGG	66 - 75
TLHY6201	♦ALGG	67 - 18
TLHY6202	♦ALGG	67 - 19
TLHY6203	♦ALGG	67 - 73
TLHY6205	♦ALGG	67 - 74
TLHY6400	♦ALGG	63 - 33
TLHY6401	♦ALGG	64 -106
TLHY6402	♦ALGG	64 -107
TLHY6403	♦ALGG	65 - 92
TLHY6405	♦ALGG	66 - 76
TLHY6600	♦ALGG	61 - 27
TLHY6601	♦ALGG	62 - 40
TLHY6602	♦ALGG	67 - 20
TLHY6603	♦ALGG	63 - 34
TLHY6605	♦ALGG	63 - 35
TLHY8400	♦ALGG	64 - 87
TLLG4400	♦ALGG	62 - 30
TLLG4401	♦ALGG	62 -103
TLLG5400	♦ALGG	71 - 43
TLLG5401	♦ALGG	72 - 35
TLLR4400	♦ALGG	44 - 80
TLLR4401	♦ALGG	46 - 20
TLLR5400	♦ALGG	44 - 82
TLLR5401	♦ALGG	46 - 22
TLLY4400	♦ALGG	62 - 31
TLLY4401	♦ALGG	62 -104
TLLY5400	♦ALGG	62 - 33
TLLY5401	♦ALGG	62 -107
TLM8051	TOSJ	92 - 37
TLM8101	TOSJ	93 - 47
TLM8102	TOSJ	93 - 48
TLM8152	TOSJ	94 - 75
TLM8202	TOSJ	95 - 2
TLMG2200	♦ALGG	70 - 9
TLMR2200	♦ALGG	42 - 48
TLMV2100	♦ALGG	78 - 80
TLMY2200	♦ALGG	61 - 5
TLN101	♦TOSJ	82 - 91
TLN103	TOSA	82 - 27
	♦TOSJ	
TLN104	TOSA	82 - 81
	TOSJ	
TLN105	TOSJ	86 - 13
TLN105A	TOSA	86 - 66
	♦TOSJ	
TLN107	TOSJ	82 - 82
TLN108	TOSA	82 -106
	♦TOSJ	
TLN109	TOSA	83 -107
	♦TOSJ	
TLN110	TOSA	88 - 84
	♦TOSJ	
TLO102A	TOSA	56 - 44
	♦TOSJ	
TLO108A	TOSA	57 - 13
	♦TOSJ	
TLO113A	♦IMTM	56 - 30
TOSA	♦TOSJ	
TLO114A	♦IMTM	56 - 9
TOSA	♦TOSJ	
TLO123	♦IMTM	56 - 25
TOSA	TOSJ	
TLO124	♦IMTM	56 - 6
TOSA	TOSJ	
TLO132	♦TOSJ	59 - 65
TLO143	♦IMTM	60 - 27
	TOSA	
TLO144	♦IMTM	59 -103
	TOSA	
TLO153	TOSA	60 - 36
	♦TOSJ	
TLO154	TOSA	60 - 22
	♦TOSJ	
TLO163	TOSA	59 -105
	♦TOSJ	
TLO164	♦IMTM	59 - 67
	TOSA	
TLO205	♦TOSJ	56 - 28
TLO208	♦TOSJ	56 - 29
TLO211	♦TOSJ	56 - 22
TLO250	♦IMTM	57 -101
	♦TOSJ	
TLO251	♦TOSJ	57 -100
TLO253	TOSJ	58 -105
TLP501	♦TOSJ	164 - 68
TLP504A	TOSA	165 - 94
	♦TOSJ	
TLP507A	TOSA	156 -109
	♦TOSJ	
TLP511GA	♦TOSJ	171 - 59
TLP517	♦TOSJ	152 - 49
TLP521-1	TOSA	165 - 75
	TOSJ	
TLP521-2	TOSA	165 - 95
	TOSJ	
TLP521-3	TOSA	165 - 97
	TOSJ	
TLP521-4	TOSA	164 - 35
	♦TOSJ	
TLP531	TOSA	165 - 76
	TOSJ	
TLP532	TOSA	165 - 77
	TOSJ	
TLP533	♦TOSJ	164 - 20
TLP534	♦TOSJ	164 - 21
TLP535	TOSA	164 - 22
	♦TOSJ	
TLP541G2	♦TOSJ	171 - 28
TLP541G	TOSA	171 - 29
	TOSJ	
TLP542G	TOSA	171 - 30
	TOSJ	
TLP543H	TOSJ	171 - 32

TYPE No.	MFRS	Pg&Line
TLP543J	TOSA	171 - 34
	TOSJ	
TLP545H	TOSJ	171 - 33
TLP545J	TOSA	171 - 35
	TOSJ	
TLP546G	TOSA	171 - 60
	TOSJ	
TLP547G	♦TOSJ	171 - 38
TLP550	TOSA	165 - 60
	TOSJ	
TLP551	TOSA	165 - 61
	TOSJ	
TLP570	TOSA	169 - 43
	♦TOSJ	
TLP571	TOSA	169 - 45
	♦TOSJ	
TLP572	TOSA	169 - 46
	♦TOSJ	
TLP573	TOSA	165 - 91
	TOSJ	
TLP800	♦TOSJ	156 - 78
TLP801	TOSJ	152 - 50
TLP802	TOSA	153 - 80
	TOSJ	
TLP850	TOSA	157 - 9
	♦TOSJ	
TLP851	TOSA	158 - 11
	TOSJ	
TLP901	♦TOSJ	160 - 61
TLP902	♦TOSJ	159 - 59
TLP903	TOSA	160 - 8
	TOSJ	
TLP904	TOSA	160 - 11
	TOSJ	
TLPG143	TOSA	78 - 33
	♦TOSJ	
TLPG144	♦IMTM	76 - 98
	TOSA	
TLPG153	TOSA	77 - 47
	♦TOSJ	
TLPG154	TOSA	75 -108
	♦TOSJ	
TLPG163	♦IMTM	76 - 82
	TOSA	
TLPG164	♦IMTM	75 - 91
	TOSA	
TLPG5600(A)	♦ALGG	71 - 44
	♦IMTM	
TLPH5600	♦ALGG	44 - 84
TLPO5600(A)	♦ALGG	56 - 63
TLPR5600	♦ALGG	41 - 47
TLPY144	TOSA	66 - 31
	♦TOSJ	
TLPY154	♦IMTM	67 - 53
	TOSA	
TLPY164	♦IMTM	66 - 47
	TOSA	
TLPY5600(A)	♦ALGG	62 - 37
	♦IMTM	
TLR101	TOSA	40 - 98
	♦TOSJ	
TLR113	♦TOSJ	51 -104
TLR113A	♦IMTM	51 -105
	TOSA	
TLR114	♦TOSJ	48 -109
TLR114A	♦IMTM	48 -110
	TOSA	
TLR115	♦TOSJ	51 - 54
TLR115A	♦IMTM	51 - 55
	TOSA	
TLR116	♦TOSJ	49 - 94
TLR116A	♦IMTM	49 - 95
	TOSA	
TLR120	♦TOSJ	52 - 16
TLR120A	♦IMTM	52 - 17
	TOSA	
TLR121	♦TOSJ	40 - 58
TLR122	TOSJ	40 - 59
TLR123	♦IMTM	43 - 30
TOSA	TOSJ	
TLR124	♦IMTM	42 - 57
TOSA	TOSJ	
TLR140	♦IMTM	53 - 61
	TOSA	
TLR143	♦IMTM	53 - 48
	TOSA	
TLR144	TOSA	46 -106
	♦TOSJ	
TLR145	♦IMTM	51 -103
	TOSA	
TLR146	♦IMTM	52 - 18
	TOSA	
TLR147	TOSA	43 - 44
	♦TOSJ	
TLR205	♦IMTM	42 - 78
	TOSJ	
TLR205-5	♦TOSJ	92 - 22
TLR206	♦IMTM	42 - 75
	TOSJ	
TLR207	♦IMTM	41 - 94
	TOSJ	
TLR208	♦IMTM	41 - 92
	TOSJ	
TLR208-5	♦TOSJ	92 - 13
TLR209	♦IMTM	42 - 40
	♦TOSJ	
TLR210	♦IMTM	42 - 41
	TOSJ	
TLR211	♦TOSJ	44 - 7
TLR226	♦IMTM	40 - 95
	TOSJ	
TLR250	♦IMTM	45 - 13
	♦TOSJ	
TLR251	♦TOSJ	45 - 57

TYPE No.	MFRS	Pg&Line
TLR306	TOSA	193 - 63
	♦TOSJ	
TLR307	TOSA	182 - 42
	♦TOSJ	
TLR308	TOSA	193 - 64
	♦TOSJ	
TLR309	TOSA	182 - 43
	♦TOSJ	
TLR312	TOSA	181 -110
	♦TOSJ	
TLR313	TOSA	182 - 1
	♦TOSJ	
TLR314	TOSA	177 - 66
	♦TOSJ	
TLR315	♦TOSJ	177 - 67
TLR320	TOSA	184 - 27
	♦TOSJ	
TLR321	TOSA	184 - 28
	♦TOSJ	
TLR322	TOSA	180 - 63
	♦TOSJ	
TLR323	TOSA	180 - 64
	♦TOSJ	
TLR324	TOSA	188 - 54
	♦TOSJ	
TLR325	TOSA	188 - 55
	♦TOSJ	
TLR326	TOSA	186 - 91
	♦TOSJ	
TLR327	TOSA	186 - 92
	♦TOSJ	
TLR328	TOSA	191 - 14
	TOSJ	
TLR329	TOSA	191 - 13
	TOSJ	
TLR332	TOSA	177 - 68
	TOSJ	
TLR333	TOSA	178 - 22
	TOSJ	
TLR334	TOSA	178 - 23
	TOSJ	
TLR335	TOSA	178 - 24
	TOSJ	
TLR342	TOSA	184 - 78
	TOSJ	
TLR343	TOSA	184 - 79
	TOSJ	
TLR344	TOSA	184 - 80
	TOSJ	
TLR345	TOSA	184 - 81
	TOSJ	
TLR352	TOSA	187 - 26
	TOSJ	
TLR353	TOSA	187 - 27
	TOSJ	
TLR358	TOSA	190 - 95
	TOSJ	
TLR359	TOSA	190 - 96
	TOSJ	
TLR362	TOSA	192 - 46
	TOSJ	
TLR363	TOSA	192 - 47
	TOSJ	
TLR364	TOSA	191 - 80
	TOSJ	
TLR365	TOSA	192 - 48
	TOSJ	
TLR366	TOSA	193 - 1
	TOSJ	
TLR367	TOSA	193 - 2
	TOSJ	
TLR368	TOSA	190 - 99
	TOSJ	
TLR369	TOSA	190 -100
	TOSJ	
TLR370	TOSA	199 - 44
	♦TOSJ	
TLR371	TOSA	199 - 45
	♦TOSJ	
TLR380	TOSA	199 - 5
	♦TOSJ	
TLR2057A	TOSA	198 - 9
	TOSJ	
TLR2087A	TOSA	198 - 10
	TOSJ	
TLR2098A	TOSA	195 - 11
	TOSJ	
TLR2110	TOSA	181 - 15
	TOSJ	
TLR2120	TOSA	181 - 16
	TOSJ	
TLR2130	TOSJ	176 - 65
TLR2140	TOSJ	176 - 66
TLR2157	TOSA	198 - 25
	♦TOSJ	
TLR2168	TOSA	195 - 12
	TOSJ	
TLR2177	TOSA	195 - 13
	TOSJ	
TLR2187	TOSA	198 - 18
	TOSJ	
TLR2198	TOSA	195 - 14
	TOSJ	
TLR2207	TOSA	195 - 15
	TOSJ	
TLR2218	TOSA	195 - 16
	TOSJ	
TLR2229	TOSA	195 - 17
	TOSJ	
TLR2231	TOSA	195 - 18
	♦TOSJ	
TLR2248	TOSA	195 - 70
	♦TOSJ	

Δ-Registered with JEDEC by this manufacturer

♦-Mfr's data sheet available in microfilm service

1. TYPE No. CROSS INDEX

IN TYPE NUMBER SEQUENCE

TYPE No.	MFRS	Pg&Line
TLR2259	TOSA	195 - 19
	♦TOSJ	
TLR2268	TOSA	195 - 20
	TOSJ	
TLR2281	TOSA	195 - 21
	♦TOSJ	
TLR2297	TOSA	198 - 20
	♦TOSJ	
TLR2307	TOSA	198 - 21
	♦TOSJ	
TLR2327	TOSA	199 - 11
	♦TOSJ	
TLR2349	♦TOSJ	196 -101
TLR2369	♦TOSJ	197 - 1
TLR2399	♦TOSJ	197 - 2
TLR3010	TOSA	195 - 71
	♦TOSJ	
TLR3010WG	TOSA	195 - 72
	♦TOSJ	
TLR4052A	TOSA	198 - 11
	TOSJ	
TLR4082A	TOSA	198 - 12
	TOSJ	
TLR4093A	TOSJ	195 - 22
TLR4115	TOSA	181 - 17
	TOSJ	
TLR4125	TOSA	181 - 18
	TOSJ	
TLR4135	TOSJ	176 - 67
TLR4145	TOSJ	176 - 68
TLR4152	TOSA	198 - 22
	TOSJ	
TLR4163	TOSA	195 - 23
	TOSJ	
TLR4172	TOSA	195 - 24
	TOSJ	
TLR4182	TOSA	198 - 19
	TOSJ	
TLR4192	TOSA	195 - 25
	TOSJ	
TLR4202	TOSA	195 - 26
	TOSJ	
TLR4213	TOSA	195 - 27
	TOSJ	
TLR4224	TOSA	195 - 28
	TOSJ	
TLR4236	TOSA	195 - 29
	♦TOSJ	
TLR4243	TOSA	195 - 73
	TOSJ	
TLR4254	TOSA	195 - 30
	♦TOSJ	
TLR4262	TOSA	195 - 31
	TOSJ	
TLR4286	TOSA	195 - 32
	♦TOSJ	
TLR4291	TOSA	198 - 23
	TOSJ	
TLR4301	TOSA	198 - 24
	TOSJ	
TLR4322	TOSA	199 - 12
	♦TOSJ	
TLR4344	♦TOSJ	196 -102
TLR4369	♦TOSJ	197 - 3
TLR4393	♦TOSJ	197 - 4
TLR5001	♦TOSJ	184 - 67
TLR5002	♦TOSJ	184 - 68
TLR8051	TOSJ	92 - 10
TLR8101	TOSJ	93 - 66
TLRG101	♦TOSJ	78 -101
TLS108A	TOSA	48 -107
	♦TOSJ	
TLS109A	TOSA	46 -107
	♦TOSJ	
TLS113	♦IMTM	52 - 45
TOSA	TOSJ	
TLS114	♦IMTM	51 - 57
TOSA	TOSJ	
TLS123	♦IMTM	52 - 19
TOSA	TOSJ	
TLS124	♦IMTM	50 - 87
TOSA	TOSJ	
TLS132	TOSJ	53 - 71
TLS143	♦IMTM	60 - 31
TOSA	♦TOSJ	
TLS144	♦IMTM	60 - 8
TOSA	♦TOSJ	
TLS153	♦IMTM	60 - 53
TOSA	♦TOSJ	
TLS154	♦IMTM	60 - 32
TOSA	♦TOSJ	
TLS163	♦IMTM	59 -106
TOSA	♦TOSJ	
TLS164	♦IMTM	59 - 68
TOSA	♦TOSJ	
TLS251	♦TOSJ	48 -108
TLS253	TOSJ	51 -100
TLS380	TOSA	199 - 6
	♦TOSJ	
TLSG2100	♦ALGG	72 - 58
TLSG2101	♦ALGG	74 - 34
TLSG3200	♦ALGG	70 - 7
TLSG3201	♦ALGG	72 - 49
TLSG3300	♦ALGG	70 - 17
TLSG3301	♦ALGG	72 - 59
TLSG3400(A)	♦ALGG	70 - 27
TLSG3401	♦ALGG	72 - 74
TLSG3600	♦ALGG	69 - 83
TLSG3601	♦ALGG	70 - 18
TLSG3700	♦ALGG	69 - 82
TLSG3701	♦ALGG	70 - 8
TLSG5100	♦ALGG	70 - 19
TLSG5101	♦ALGG	72 - 60
TLSG5200	♦ALGG	70 - 25

TYPE No.	MFRS	Pg&Line
TLSG5201	♦ALGG	72 - 69
TLSG5300	♦ALGG	70 - 20
TLSG5301	♦ALGG	72 - 61
TLSG5400	♦ALGG	70 - 28
TLSG5401	♦ALGG	72 - 75
TLSG5500	♦ALGG	69 - 86
TLSG5501	♦ALGG	70 - 29
TLSG5600	♦ALGG	69 - 84
TLSG5601	♦ALGG	70 - 21
TLSG5700	♦ALGG	69 - 85
TLSG5701	♦ALGG	70 - 22
TLSG6600	♦ALGG	69 -105
TLSH2100	♦ALGG	46 - 73
TLSH2101	♦ALGG	49 - 60
TLSO3200	♦ALGG	56 - 64
TLSO3201	♦ALGG	58 - 11
TLSO3300	♦ALGG	56 - 66
TLSO3301	♦ALGG	58 - 13
TLSO3400	♦ALGG	56 - 73
TLSO3401	♦ALGG	58 - 17
TLSO3600	♦ALGG	55 -110
TLSO3601	♦ALGG	56 - 67
TLSO3700	ALGG	55 - 98
TLSO3701	♦ALGG	56 - 65
TLSO5100	♦ALGG	56 - 68
TLSO5101	♦ALGG	58 - 14
TLSO5200	♦ALGG	56 - 72
TLSO5201	♦ALGG	58 - 16
TLSO5300	♦ALGG	56 - 69
TLSO5301	♦ALGG	58 - 15
TLSO5400	♦ALGG	56 - 74
TLSO5401	♦ALGG	58 - 18
TLSO5500	♦ALGG	56 - 8
TLSO5501	♦ALGG	56 - 75
TLSO5600	♦ALGG	56 - 1
TLSO5601	♦ALGG	56 - 70
TLSO5700	♦ALGG	56 - 2
TLSO5701	♦ALGG	56 - 71
TLSO6600	♦ALGG	55 - 91
TLSR2100	♦ALGG	41 - 41
TLSR2101	♦ALGG	42 - 17
TLSR3200	♦ALGG	41 - 39
TLSR3201	♦ALGG	42 - 16
TLSR3300	♦ALGG	41 - 42
TLSR3301	♦ALGG	42 - 18
TLSR3400	♦ALGG	41 - 49
TLSR3401	♦ALGG	42 - 22
TLSR3600	♦ALGG	40 - 71
TLSR3601	ALGG	40 -101
TLSR3700	♦ALGG	40 - 60
TLSR3701	♦ALGG	40 -100
TLSR5100	♦ALGG	41 - 43
TLSR5101	♦ALGG	42 - 19
TLSR5200	♦ALGG	41 - 48
TLSR5201	♦ALGG	42 - 21
TLSR5300	♦ALGG	41 - 44
TLSR5301	♦ALGG	42 - 20
TLSR5400	♦ALGG	41 - 50
TLSR5401(A)	♦ALGG	42 - 23
TLSR5500	♦ALGG	40 -104
TLSR5501	♦ALGG	41 - 51
TLSR5600	♦ALGG	40 -102
TLSR5601	♦ALGG	41 - 45
TLSR5700	♦ALGG	40 -103
TLSR5701	♦ALGG	41 - 46
TLSR6600	♦ALGG	40 - 75
TLSV5100	♦ALGG	79 - 94
TLSY2100	♦ALGG	62 - 36
TLSY2101	♦ALGG	63 - 14
TLSY3200(A)	♦ALGG	61 - 3
TLSY3201(A)	♦ALGG	63 - 7
TLSY3300	♦ALGG	61 - 16
TLSY3301	♦ALGG	63 - 15
TLSY3400	♦ALGG	61 - 30
TLSY3401	♦ALGG	63 - 39
TLSY3600	♦ALGG	60 - 84
TLSY3601	♦ALGG	61 - 17
TLSY3700	♦ALGG	60 - 83
TLSY3701	♦ALGG	61 - 4
TLSY5100	♦ALGG	61 - 18
TLSY5101	♦ALGG	63 - 16
TLSY5200	♦ALGG	61 - 28
TLSY5201	♦ALGG	63 - 36
TLSY5300	♦ALGG	61 - 19
TLSY5301	♦ALGG	63 - 17
TLSY5400	♦ALGG	61 - 31
TLSY5401	♦ALGG	63 - 40
TLSY5500	♦ALGG	60 - 87
TLSY5501	♦ALGG	61 - 32
TLSY5600	♦ALGG	60 - 85
TLSY5601	♦ALGG	61 - 20
TLSY5700	♦ALGG	60 - 86
TLSY5701	♦ALGG	61 - 21
TLUG143	♦IMTM	78 - 51
TOSA	♦TOSJ	
TLUG144	♦IMTM	78 - 5
	♦TOSJ	
TLUG153	♦IMTM	78 - 62
TOSA	♦TOSJ	
TLUG154	♦IMTM	78 - 56
TOSA	♦TOSJ	
TLUG163	♦IMTM	78 - 28
TOSA	♦TOSJ	
TLUG164	♦IMTM	77 -103
TOSA	♦TOSJ	
TLUO2400	♦ALGG	56 -109
TLUO2401	♦ALGG	58 - 56
TLUO4400	♦ALGG	57 - 5
TLUO4401	♦ALGG	58 - 63
TLUO5400	♦ALGG	57 - 7
TLUO5401	♦ALGG	58 - 65
TLUO6400	♦ALGG	57 - 8
TLUO6401	♦ALGG	58 - 66

TYPE No.	MFRS	Pg&Line
TLUR143	♦IMTM	55 - 20
TOSA	♦TOSJ	
TLUR144	♦IMTM	54 - 92
TOSA	♦TOSJ	
TLUR153	♦IMTM	55 - 28
TOSA	♦TOSJ	
TLUR154	♦IMTM	55 - 21
TOSA	♦TOSJ	
TLUR163	♦IMTM	54 - 81
TOSA	♦TOSJ	
TLUR164	♦IMTM	54 - 23
TOSA	♦TOSJ	
TLUR2400	♦ALGG	42 - 42
TLUR2401	♦ALGG	46 - 45
TLUR4100	♦ALGG	46 - 79
TLUR4101	♦ALGG	49 - 65
TLUR4102	♦ALGG	46 - 80
TLUR4103	♦ALGG	49 - 66
TLUR4400	♦ALGG	42 - 58
TLUR4401	♦ALGG	46 - 81
TLUR4402	♦ALGG	44 - 86
TLUR4403	♦ALGG	46 - 82
TLUR5100	♦ALGG	49 - 68
TLUR5101	♦ALGG	50 - 84
TLUR5102	♦ALGG	49 - 69
TLUR5103	♦ALGG	50 - 85
TLUR5400	♦ALGG	42 - 63
TLUR5401	♦ALGG	46 - 98
TLUR5402	♦ALGG	42 - 64
TLUR5403	♦ALGG	46 - 99
TLUR6400(A)	♦ALGG	42 - 65
TLUR6401(A)	♦ALGG	46 -100
TLUV5300	♦ALGG	79 - 95
TLUY143	TOSA	68 - 46
	♦TOSJ	
TLUY144	TOSA	67 - 75
	♦TOSJ	
TLUY153	♦IMTM	69 - 24
TOSA	♦TOSJ	
TLUY154	♦IMTM	68 -104
TOSA	♦TOSJ	
TLUY163	♦IMTM	68 - 85
TOSA	♦TOSJ	
TLUY164	♦IMTM	68 - 32
TOSA	♦TOSJ	
TLUY2400	♦ALGG	60 -110
TLUY2401	♦ALGG	63 - 3
TLXR4100	♦ALGG	52 - 88
TLXR4101	♦ALGG	53 - 26
TLXR4400	♦ALGG	52 - 7
TLXR4401	♦ALGG	52 - 89
TLXR5100	♦ALGG	54 - 42
TLXR5101	♦ALGG	54 - 70
TLXR5400	♦ALGG	52 - 13
TLXR5401	♦ALGG	52 - 90
TLY102A	TOSA	62 - 6
	♦TOSJ	
TLY108A	TOSA	63 - 43
	♦TOSJ	
TLY113A	♦IMTM	63 - 45
TOSA	TOSJ	
TLY114A	♦IMTM	62 - 78
TOSA	TOSJ	
TLY123	♦IMTM	61 - 72
TOSA	TOSJ	
TLY124	♦IMTM	61 - 25
TOSA	TOSJ	
TLY132	TOSJ	67 - 78
TLY143	♦IMTM	68 - 83
TOSA	♦TOSJ	
TLY144	♦IMTM	68 - 15
TOSA	♦TOSJ	
TLY147	♦IMTM	66 - 79
TOSA	♦TOSJ	
TLY153	♦IMTM	68 -105
TOSA	♦TOSJ	
TLY154	♦IMTM	68 - 78
TOSA	♦TOSJ	
TLY163	♦IMTM	68 - 33
TOSA	♦TOSJ	
TLY164	♦IMTM	67 - 88
TOSA	♦TOSJ	
TLY205	♦IMTM	61 - 36
	TOSJ	
TLY205-5	♦TOSJ	92 - 50
TLY206	♦IMTM	61 - 33
	TOSJ	
TLY207	♦IMTM	61 - 38
	TOSJ	
TLY208	♦IMTM	61 - 37
	TOSJ	
TLY208-5	♦TOSJ	92 - 51
TLY209	♦IMTM	61 - 63
	♦TOSJ	
TLY210	♦IMTM	61 - 64
	TOSJ	
TLY211	♦IMTM	63 - 87
	♦TOSJ	
TLY226	♦IMTM	60 - 66
	TOSJ	
TLY250	♦IMTM	64 - 68
	♦TOSJ	
TLY251	♦TOSJ	64 - 55
TLY253	TOSJ	66 - 54
TLYG5200	♦ALGG	74 - 27
TLYR5200	♦ALGG	49 - 37
TLYR5500	♦ALGG	41 - 40
TLYY5200	♦ALGG	64 - 89
TP60	♦SIEG	138 - 17
TP60P	♦SIEG	138 -110
	♦SIEX	
TP61	♦SIEG	138 - 18
TP61P	SIEG	139 - 1
	♦SIEX	

TYPE No.	MFRS	Pg&Line
TPAC6050	♦ALGG	95 - 20
TPAC6080	♦ALGG	95 - 21
TPAC7050	♦ALGG	95 - 27
TPAC7080	♦ALGG	95 - 28
TPMP8160	♦ALGG	95 - 29
TPS601	♦TOSJ	119 - 85
TPS603	TOSA	116 - 55
	♦TOSJ	
TPS604	TOSA	119 - 86
	TOSJ	
TPS605	TOSA	122 - 5
	♦TOSJ	
TPS606	TOSA	120 - 31
	TOSJ	
TPS607	TOSJ	122 - 24
TPS703	TOSA	104 - 5
	TOSJ	
TPS708	TOSA	103 - 92
	♦TOSJ	
TRLG3210	♦ALGG	69 - 39
TRLR3160	♦ALGG	44 - 81
TSHA5200	♦ALGG	87 - 16
TSHA5201	♦ALGG	87 - 47
TSHA5202	♦ALGG	87 - 75
TSHA5203	♦ALGG	87 - 84
TSHA5500	♦ALGG	87 - 17
TSHA5501	♦ALGG	87 - 48
TSHA5502	♦ALGG	87 - 76
TSHA5503	♦ALGG	87 - 85
TSHA6200	♦ALGG	87 - 18
TSHA6201	♦ALGG	87 - 49
TSHA6202	♦ALGG	87 - 77
TSHA6203	♦ALGG	87 - 86
TSHA6500	♦ALGG	87 - 19
TSHA6501	♦ALGG	87 - 50
TSHA6502	♦ALGG	87 - 78
TSHA6503	♦ALGG	87 - 87
TSO5400	DPI	224 - 26
TSTA7100	♦ALGG	86 - 46
TSTS7100	♦ALGG	86 - 47
TSTS7101	♦ALGG	86 - 48
TSTS7102	♦ALGG	86 - 49
TSTS7103	♦ALGG	86 - 50
TSTS7200	♦ALGG	86 - 51
TSTS7201	♦ALGG	86 - 52
TSTS7202	♦ALGG	86 - 53
TSTS7203	♦ALGG	86 - 54
TSTS7500	♦ALGG	86 - 55
TSTS7501	♦ALGG	86 - 56
TSTS7502	♦ALGG	86 - 57
TSTS7503	♦ALGG	86 - 58
TSUS3400	♦ALGG	86 - 97
TSUS5200	♦ALGG	86 -103
TSUS5201	♦ALGG	86 -104
TSUS5202	♦ALGG	87 - 28
TSUS5400	♦ALGG	86 -105
TSUS5401	♦ALGG	86 -106
TSUS5402	♦ALGG	87 - 29
TSUS5411	♦ALGG	87 - 14
TXCK1200	♦ALGG	233 - 14
TXCK1203	♦ALGG	233 - 15
TXCK1500	♦ALGG	233 - 16
TXFK1500	♦ALGG	233 - 17
TXSK0100	♦ALGG	96 - 88
TXSK0101	♦ALGG	97 - 20
TXSK0103	♦ALGG	97 - 43
TXSK0300	♦ALGG	96 - 90
TXSK0301	♦ALGG	97 - 23
TXSK0303	♦ALGG	97 - 47
TXSK0500	♦ALGG	96 - 93
TXSK0501	♦ALGG	97 - 26
TXSK0503	♦ALGG	97 - 50
TXSK1100	♦ALGG	96 - 89
TXSK1101	♦ALGG	97 - 21
TXSK1103	♦ALGG	97 - 44
TXSK1300	♦ALGG	96 - 91
TXSK1301	♦ALGG	97 - 24
TXSK1303	♦ALGG	97 - 48
TXSK1500	♦ALGG	96 - 94
TXSK1501	♦ALGG	97 - 27
TXSK1503	♦ALGG	97 - 51
TXSK1700	♦ALGG	96 - 87
TXSK1701	♦ALGG	97 - 19
TXSK1703	♦ALGG	97 - 42
TXSK2101	♦ALGG	97 - 22
TXSK2103	♦ALGG	97 - 45
TXSK2301	♦ALGG	97 - 25
TXSK2303	♦ALGG	97 - 49
TXSK2501	♦ALGG	97 - 28
TXSK2503	♦ALGG	97 - 52
TXSK3501	♦ALGG	97 - 29
TXSK3503	♦ALGG	97 - 53
UDT020D	♦UDT	124 - 38
UDT020UV	♦UDT	124 - 39
UDT055UV	♦UDT	124 - 40
UDT220SB	♦UDT	104 - 32
UDT450	♦UDT	124 - 73
UDT451	♦UDT	124 - 41
UDT452	♦UDT	124 - 42
UDT455	♦UDT	124 - 43
UDT455HS	♦UDT	124 - 44
UDT455UV	♦UDT	124 - 45
UDT500D	♦UDT	124 - 74
UDT555D	♦UDT	124 - 46
UDT555UV	♦UDT	124 - 47
UDT-UV005	♦UDT	104 - 19
UDT-UV20	♦UDT	104 - 20
UDT-UV35	♦UDT	104 - 21
UDT-UV35P	♦UDT	104 - 22
UDT-UV50	♦UDT	104 - 23
UDT-UV50L	♦UDT	104 - 24
UDT-UV100	♦UDT	104 - 25
UDT-UV100L	♦UDT	104 - 26
ULN3330D	♦SPR	124 - 4

TYPE No.	MFRS	Pg&Line
ULN3330T	♦SPR	124 - 5
UPD791D	NECE	233 - 7
	♦NECJ	
UPD792D	♦NECJ	233 - 8
UPD795D	NECE	233 - 9
	♦NECJ	
UPD799D	NECE	233 - 10
	♦NECJ	
UV005V	♦UDT	137 - 45
UV040BG	♦EGG	114 - 15
UV040BQ	EGG	114 - 1
UV50V	♦UDT	137 - 46
UV100BG	♦EGG	114 - 16
UV100BQ	EGG	114 - 2
UV100V	♦UDT	137 - 47
UV140BQ2	♦EGG	114 - 3
UV140BQ4	♦EGG	114 - 4
UV215BG	♦EGG	114 - 17
UV215BQ	EGG	114 - 5
UV250BG	♦EGG	114 - 18
UV250BQ	EGG	114 - 6
UV360BG	♦EGG	114 - 19
UV360BQ	♦EGG	114 - 7
UV444BQ	♦EGG	114 - 8
VB100-1	INRI	137 - 73
VB100-2	INRI	137 - 69
VB100-3	INRI	137 - 79
VB100-4	INRI	137 - 81
VB100-5	INRI	137 - 70
VB100-8	INRI	137 - 64
VB100-18	INRI	137 - 74
VB0505EPL	♦TOI	139 -103
VB1010EPL	♦TOI	139 -107
VB1020EPL	♦TOI	140 - 1
VB02505EPL	♦TOI	139 -100
VBTO5	♦TOI	139 -101
VBTO8	♦TOI	139 -106
VBTO18	♦TOI	139 - 97
VR1LB	VAC	139 - 70
VR5LB	VAC	139 - 74
VR10EB	VAC	139 - 26
VR10LB	VAC	139 - 76
VR10MB	VAC	139 - 27
VR75EB	VAC	139 - 28
VR75LB	VAC	139 - 79
VR100GB	VAC	139 - 29
VR100KB	VAC	139 - 30
VR100LB	VAC	139 - 82
VR100MB	VAC	139 - 31
VR3665S	♦STAJ	49 - 8
VR3668S	♦STAJ	54 - 2
VR5562X	STAJ	51 - 88
VRBG5314S	♦STAJ	79 - 57
VRBG5315S	♦STAJ	79 - 53
VRBG5341K	♦STAJ	79 - 40
VRPY5314S	♦STAJ	79 - 84
VRPY5315S	♦STAJ	79 - 83
VRPY5341K	♦STAJ	79 - 80
VRX5LB	VAC	139 - 44
VRX10LB	VAC	139 - 46
VRX15LB	VAC	139 - 50
VRX80EB	VAC	139 - 32
VRX80HB	VAC	139 - 33
VRX80LB	VAC	139 - 58
VRX80TB	VAC	139 - 34
VS1LB	VAC	139 - 52
VS2LB	VAC	139 - 54
VS3LB	VAC	139 - 60
VS4LB	VAC	139 - 65
VS5LB	VAC	139 - 56
VS7LB	VAC	139 - 62
VS8LB	VAC	139 - 66
VS10LB	VAC	139 - 68
VS11LB	VAC	139 - 72
VS13LB	VAC	139 - 80
VS14LB	VAC	139 - 35
VS17LB	VAC	139 - 36
VS50LB	VAC	139 - 37
VS55LB	VAC	139 - 38
VS56LB	VAC	139 - 39
VS100EB	♦VAC	139 - 40
VS100LB	VAC	139 - 41
VS150LB	VAC	139 - 42
VSX10LB	VAC	139 - 48
VT23L	♦VAC	133 - 25
VT30L	♦VAC	131 - 14
VT32L	♦VAC	131 - 16
VT34L	♦VAC	130 - 58
VT50L	♦VAC	130 - 95
VT51L	♦VAC	130 - 60
VT54L	♦VAC	130 - 41
VT70L	♦VAC	130 -105
VT74L	♦VAC	130 - 51
VT82L	♦VAC	131 - 15
VT93L	♦VAC	133 - 26
VT201	♦VAC	131 - 98
VT202	♦VAC	132 - 70
VT202H	♦VAC	133 - 55
VT203	♦VAC	133 - 97
VT203H	♦VAC	134 - 44
VT204	♦VAC	135 - 11
VT204L	♦VAC	134 - 94
VT205	♦VAC	135 - 67
VT211	♦VAC	131 - 38
VT211H	♦VAC	131 - 69
VT212	♦VAC	132 - 66
VT212L	♦VAC	132 - 29
VT213	♦VAC	133 - 98
VT213H	♦VAC	134 - 21
VT213L	♦VAC	133 - 61
VT214	♦VAC	135 - 23
VT214L	♦VAC	134 - 72
VT221	♦VAC	132 - 36
VT222	♦VAC	133 - 12

Δ-Registered with JEDEC by this manufacturer

♦-Mfr's data sheet available in microfilm service

1. TYPE No. CROSS INDEX

IN TYPE NUMBER SEQUENCE

TYPE No.	MFRS	Pg&Line
VT222H	♦VAC	133 - 93
VT223	♦VAC	134 - 40
VT223H	♦VAC	134 - 76
VT224	♦VAC	135 - 52
VT224L	♦VAC	134 - 92
VT225	♦VAC	135 - 68
VT231	♦VAC	133 - 95
VT232	♦VAC	135 - 3
VT233	♦VAC	135 - 50
VT233L	♦VAC	135 - 29
VT234	♦VAC	135 - 62
VT235	♦VAC	135 - 71
VT241	♦VAC	131 - 29
VT241H	♦VAC	131 - 93
VT242	♦VAC	133 - 56
VT242H	♦VAC	134 - 16
VT242L	♦VAC	132 - 71
VT271	♦VAC	131 - 90
VT272	♦VAC	132 - 23
VT274	♦VAC	135 - 75
VT301	♦VAC	131 - 58
VT301/2	♦VAC	135 - 99
VT301H	♦VAC	132 - 31
VT302	♦VAC	133 - 62
VT302/2	♦VAC	135 -106
VT302L	♦VAC	133 - 20
VT303	♦VAC	134 - 85
VT303L	♦VAC	134 - 22
VT304	♦VAC	135 - 27
VT305	♦VAC	135 - 69
VT311	♦VAC	131 - 97
VT311L	♦VAC	131 - 34
VT312	♦VAC	133 - 99
VT312/2	♦VAC	135 - 93
VT312H	♦VAC	134 - 17
VT312L	♦VAC	132 - 79
VT313L	♦VAC	134 - 69
VT314	♦VAC	135 - 24
VT321	♦VAC	131 - 76
VT321H	♦VAC	132 - 67
VT322	♦VAC	134 - 19
VT322L	♦VAC	133 - 59
VT325	♦VAC	135 - 70
VT333	♦VAC	134 - 4
VT333/2	♦VAC	136 - 12
VT333L	♦VAC	133 - 48
VT341	♦VAC	130 - 91
VT341/2	♦VAC	135 - 88
VT341H	♦VAC	131 - 40
VT342	♦VAC	132 - 42
VT342L	♦VAC	131 -103
VT343	♦VAC	134 - 5
VT343L	♦VAC	133 - 49
VT371	♦VAC	131 - 47
VT372	♦VAC	135 - 73
VT373	♦VAC	133 - 78
VT373H	♦VAC	135 - 76
VT401	VAC	130 - 83
VT402	VAC	132 - 91
VT420HR	♦VAC	130 - 17
VT420LR	♦VAC	130 - 18
VT421HR	♦VAC	130 - 19
VT421LR	♦VAC	130 - 20
VT422HR	♦VAC	130 - 21
VT422LR	♦VAC	130 - 22
VT423HR	♦VAC	130 - 23
VT423LR	♦VAC	130 - 24
VT431	VAC	132 - 33
VT432	VAC	133 - 22
VT433	VAC	133 - 80
VT434	VAC	134 - 24
VT435	VAC	134 - 70
VT436	VAC	135 - 13
VT471	♦VAC	130 - 80
VT471L	♦VAC	134 -107
VT501	♦VAC	131 - 44
VT501H	♦VAC	131 - 96
VT502	♦VAC	133 - 63
VT502L	♦VAC	132 - 75
VT503	♦VAC	134 - 80
VT503L	♦VAC	134 - 23
VT511	♦VAC	131 - 39
VT511H	♦VAC	131 -100
VT511L	♦VAC	130 - 96
VT512L	♦VAC	132 - 93
VT521	♦VAC	131 - 45
VT521H	♦VAC	132 - 15
VT522	♦VAC	133 - 79
VT522L	♦VAC	132 - 92
VT523L	♦VAC	134 - 29
VT533	♦VAC	133 -108
VT533L	♦VAC	133 - 35
VT541	♦VAC	130 - 54
VT541H	♦VAC	130 - 86
VT542	♦VAC	131 - 32
VT542L	♦VAC	130 -104
VT571	♦VAC	135 - 46
VT571L	♦VAC	134 -108
VT701	♦VAC	131 - 59
VT701E	♦VAC	131 - 64
VT702E	♦VAC	133 - 75
VT702L	♦VAC	132 - 86
VT702LE	♦VAC	133 - 18
VT703	♦VAC	134 - 81
VT704	♦VAC	135 - 20
VT712E	♦VAC	133 -106
VT721	♦VAC	131 - 46
VT721H	♦VAC	131 -104
VT721HE	♦VAC	132 - 20
VT732	♦VAC	133 - 21
VT732E	♦VAC	133 - 28
VT741	♦VAC	130 - 78
VT741E	♦VAC	130 - 94
VT771	♦VAC	131 - 31
VT771H	♦VAC	135 - 74
VT771L	♦VAC	135 - 51
VT773	♦VAC	132 - 80
VT801	♦VAC	131 - 60
VT804	♦VAC	135 - 25
VT811	♦VAC	131 - 91
VT811/2	♦VAC	135 - 85
VT811H	♦VAC	132 - 72
VT833	♦VAC	134 - 25
VT833/2	♦VAC	136 - 11
VT835	♦VAC	135 - 49
VT841/2	♦VAC	135 - 84
VT841L	♦VAC	130 - 79
VT871	♦VAC	131 - 56
VT871/2	♦VAC	135 -100
VT901	♦VAC	134 - 43
VT902	♦VAC	132 - 73
VT903H	♦VAC	134 - 45
VT904	♦VAC	135 - 12
VT904L	♦VAC	134 - 95
VT912	♦VAC	133 - 57
VT912L	♦VAC	132 - 30
VT913H	♦VAC	134 - 20
VT914	♦VAC	135 - 22
VT914L	♦VAC	134 - 71
VT931	♦VAC	133 - 96
VT932	♦VAC	135 - 4
VT941	♦VAC	131 - 30
VT971	♦VAC	135 - 72
VT971L	♦VAC	135 - 64
VTA1011	♦VAC	121 - 54
VTA1012	♦VAC	121 - 87
VTA1013	♦VAC	122 - 17
VTA1021	♦VAC	121 - 26
VTA1022	♦VAC	121 - 42
VTA1023	♦VAC	121 - 75
VTA1111	♦VAC	121 -109
VTA1112	♦VAC	122 - 31
VTA1121	♦VAC	121 - 52
VTA1122	♦VAC	121 - 86
VTA3121	♦VAC	121 - 53
VTA3121E	♦VAC	121 - 56
VTA3122	♦VAC	121 -107
VTA3122E	♦VAC	121 - 89
VTA3321	♦VAC	121 - 57
VTA3322	♦VAC	121 - 90
VTA7121	♦VAC	121 - 28
VTA7122	♦VAC	121 - 44
VTA7123	♦VAC	121 - 67
VTA9311	♦VAC	121 - 55
VTA9312	♦VAC	121 - 88
VTA9313	♦VAC	122 - 18
VTA9321	♦VAC	121 - 27
VTA9322	♦VAC	121 - 43
VTA9323	♦VAC	121 - 76
VTB1012	♦VAC	107 - 91
VTB1012B	♦VAC	107 - 92
VTB1012BI	♦VAC	109 - 38
VTB1012I	♦VAC	109 - 48
VTB1013	♦VAC	107 - 81
VTB1013B	♦VAC	107 - 82
VTB1013BI	♦VAC	109 - 37
VTB1013I	♦VAC	109 - 47
VTB1112	♦VAC	107 - 93
VTB1112B	♦VAC	107 - 94
VTB1112BI	♦VAC	109 - 82
VTB1112I	♦VAC	109 - 83
VTB1113	♦VAC	107 - 83
VTB1113B	♦VAC	107 - 84
VTB1113BI	♦VAC	109 - 80
VTB1113I	♦VAC	109 - 81
VTB4050	♦VAC	109 - 74
VTB4051	♦VAC	109 - 73
VTB5040	♦VAC	107 - 97
VTB5040B	♦VAC	107 - 98
VTB5040J	♦VAC	109 - 50
VTB5041	♦VAC	107 - 87
VTB5041B	♦VAC	107 - 88
VTB5041J	♦VAC	109 - 49
VTB5050	♦VAC	107 -101
VTB5050B	♦VAC	107 -102
VTB5050J	♦VAC	109 - 53
VTB5050UV	♦VAC	107 - 76
VTB5050UVJ	♦VAC	109 - 54
VTB5051	♦VAC	107 - 89
VTB5051B	♦VAC	107 - 90
VTB5051J	♦VAC	109 - 51
VTB5051UV	♦VAC	114 - 13
VTB5051UVJ	♦VAC	109 - 52
VTB6060	♦VAC	107 -103
VTB6060B	♦VAC	107 -104
VTB6060J	♦VAC	109 - 56
VTB6060UV	♦VAC	107 - 77
VTB6060UVJ	♦VAC	109 - 57
VTB6061	♦VAC	107 - 99
VTB6061B	♦VAC	107 -100
VTB6061J	♦VAC	109 - 55
VTB6061UV	♦VAC	114 - 14
VTB6061UVJ	♦VAC	109 - 58
VTB8340	♦VAC	109 - 60
VTB8341	♦VAC	109 - 59
VTB8440	♦VAC	109 - 98
VTB8440B	♦VAC	109 - 79
VTB8441	♦VAC	109 - 88
VTB8441B	♦VAC	109 - 78
VTB8442	♦VAC	109 - 87
VTB8442B	♦VAC	109 - 77
VTB8443	♦VAC	109 - 86
VTB8443B	♦VAC	109 - 76
VTB8444	♦VAC	109 - 85
VTB8444B	♦VAC	109 - 75
VTB9412	♦VAC	107 - 95
VTB9412B	♦VAC	107 - 96
VTB9413	♦VAC	107 - 85
VTB9413B	♦VAC	107 - 86
VTB9414	♦VAC	109 - 72
VTB9414B	♦VAC	107 - 80
VTB9415B	♦VAC	107 - 79
VTB9416B	♦VAC	107 - 78
VTE1012	♦VAC	87 - 40
VTE1013	♦VAC	87 - 96
VTE1015	♦VAC	83 - 96
VTE1016	♦VAC	85 - 21
VTE1017	♦VAC	85 - 68
VTE1018	♦VAC	85 - 97
VTE1112	♦VAC	87 - 41
VTE1113	♦VAC	87 - 97
VTE1115	♦VAC	83 - 97
VTE1116	♦VAC	85 - 22
VTE1117	♦VAC	85 - 69
VTE1118	♦VAC	85 - 98
VTE1211	♦VAC	88 - 64
VTE1211W	♦VAC	84 - 98
VTE3121	♦VAC	82 - 62
VTE3121L	♦VAC	82 - 63
VTE3122	♦VAC	83 - 7
VTE3122L	♦VAC	83 - 8
VTE3123	♦VAC	83 - 16
VTE3123L	♦VAC	83 - 17
VTE3124	♦VAC	83 - 41
VTE3124L	♦VAC	83 - 42
VTE3321	♦VAC	82 -101
VTE3322	VAC	83 - 57
VTE3323	♦VAC	84 - 35
VTE3324	♦VAC	84 - 72
VTE3521	♦VAC	82 - 64
VTE3522	♦VAC	83 - 43
VTE3523	♦VAC	83 -106
VTE3524	♦VAC	84 - 9
VTE7121	VAC	82 - 33
VTE7122	VAC	82 -105
VTE7123	VAC	83 - 25
VTE7124	VAC	83 -105
VTE7321	♦VAC	84 - 11
VTE7322	♦VAC	84 - 12
VTE7324	♦VAC	84 - 13
VTIC1010	♦VAC	125 - 75
VTIC1010IR	♦VAC	125 - 76
VTIC1110	♦VAC	125 - 77
VTIC1110IR	♦VAC	125 - 78
VTIC7110	♦VAC	125 - 79
VTIC7210	♦VAC	125 - 80
VTL1A1	♦VAC	161 - 42
VTL1A2	♦VAC	161 - 28
VTL1A3	♦VAC	161 - 53
VTL1A4	♦VAC	161 - 29
VTL1B5	♦VAC	161 - 64
VTL1B6	♦VAC	161 - 74
VTL2C1	♦VAC	161 - 80
VTL2C2	♦VAC	161 - 43
VTL2C3	♦VAC	161 - 68
VTL2C4	♦VAC	161 - 22
VTL3A11	♦VAC	162 - 2
VTL3A12	♦VAC	162 - 3
VTL3A13	♦VAC	161 -108
VTL3A14	♦VAC	161 -109
VTL3A15	♦VAC	162 - 4
VTL3A16	♦VAC	162 - 5
VTL3A17	♦VAC	161 -110
VTL3A21	♦VAC	162 - 7
VTL3A22	♦VAC	162 - 6
VTL3A23	♦VAC	162 - 1
VTL3A24	♦VAC	162 - 43
VTL3A25	♦VAC	162 - 53
VTL3A26	♦VAC	162 - 49
VTL3A27	♦VAC	162 - 22
VTL3A31	♦VAC	162 - 89
VTL3A31/2	♦VAC	162 - 94
VTL3A32	♦VAC	162 - 87
VTL3A32/2	♦VAC	162 - 91
VTL3A33	♦VAC	162 - 50
VTL3A33/2	♦VAC	162 - 59
VTL3A34	♦VAC	162 - 60
VTL3A34/2	♦VAC	162 - 71
VTL3A35	♦VAC	162 - 82
VTL3A35/2	♦VAC	162 - 88
VTL3A36	♦VAC	162 - 77
VTL3A36/2	♦VAC	162 - 83
VTL3A37	♦VAC	162 - 38
VTL3A37/2	♦VAC	162 - 46
VTL3A41	♦VAC	162 - 25
VTL3A41/2	♦VAC	162 - 39
VTL3A42	♦VAC	162 - 26
VTL3A42/2	♦VAC	162 - 40
VTL3A43	♦VAC	162 - 11
VTL3A43/2	♦VAC	162 - 14
VTL3A44	♦VAC	162 - 12
VTL3A44/2	♦VAC	162 - 15
VTL3A45	♦VAC	162 - 23
VTL3A45/2	♦VAC	162 - 28
VTL3A46	♦VAC	162 - 17
VTL3A46/2	♦VAC	162 - 24
VTL3A47	♦VAC	162 - 9
VTL3A47/2	♦VAC	162 - 13
VTL3B18	♦VAC	162 - 93
VTL3B19	♦VAC	162 - 69
VTL3B28	♦VAC	162 - 90
VTL3B29	♦VAC	162 - 54
VTL3B38	♦VAC	162 - 96
VTL3B38/2	♦VAC	162 - 8
VTL3B39	♦VAC	162 - 92
VTL3B39/2	♦VAC	162 - 95
VTL3B48	♦VAC	162 - 68
VTL3B48/2	♦VAC	162 - 75
VTL3B49	♦VAC	162 - 99
VTL3B49/2	♦VAC	162 - 29
VTL3B49AS	♦VAC	163 - 9
VTL5C1	♦VAC	162 - 51
VTL5C2	♦VAC	162 - 52
VTL5C3	♦VAC	162 - 78
VTL5C3/2	♦VAC	162 - 84
VTL5C4	♦VAC	162 - 27
VTL5C4/2	♦VAC	162 - 41
VTL5C6	♦VAC	162 - 85
VTL5C7	♦VAC	162 - 76
VTL5C8	♦VAC	163 - 81
VTL7A1	VAC	131 - 17
VTL9A1	♦VAC	161 - 39
VTL9A2	♦VAC	161 - 19
VTL9A3	♦VAC	161 - 30
VTL9A4	♦VAC	161 - 34
VTL9A5	♦VAC	161 - 66
VTL9A9	♦VAC	161 - 26
VTL9A10	♦VAC	161 - 54
VTL9A11	♦VAC	161 - 48
VTL9B6	♦VAC	161 - 35
VTL9B7	♦VAC	161 - 55
VTL9B8	♦VAC	161 - 69
VTL10D1	♦VAC	153 - 81
VTL10D1A	VAC	153 - 82
VTL10D1B	VAC	153 - 83
VTL10D2	♦VAC	155 - 34
VTL10D2A	VAC	155 - 35
VTL10D2B	VAC	155 - 36
VTL10D3	♦VAC	156 - 79
VTL10D3A	VAC	156 - 80
VTL10D3B	VAC	156 - 81
VTL10D4	♦VAC	157 - 33
VTL10D4A	VAC	157 - 34
VTL10D4B	VAC	157 - 35
VTL10D5	♦VAC	153 - 84
VTL10D5A	VAC	153 - 85
VTL10D5B	VAC	153 - 86
VTL10D6	♦VAC	151 - 93
VTL10D6A	VAC	151 - 94
VTL10D6B	VAC	151 - 95
VTL10D7	VAC	154 - 20
VTL10D7A	VAC	154 - 21
VTL10D7B	VAC	154 - 22
VTL10E1	♦VAC	152 - 57
VTL10E1A	VAC	152 - 58
VTL10E1B	VAC	153 - 87
VTL10E2	♦VAC	154 - 39
VTL10E2A	VAC	154 - 40
VTL10E2B	VAC	155 - 37
VTL10E3	♦VAC	156 - 48
VTL10E3A	VAC	156 - 49
VTL10E3B	VAC	156 - 50
VTL10E5	VAC	152 - 59
VTL10E5A	VAC	152 - 60
VTL10E5B	VAC	152 - 61
VTL10E6	VAC	151 - 75
VTL10E6A	VAC	151 - 76
VTL10E6B	VAC	151 - 77
VTL10E7	VAC	154 - 9
VTL10E7A	VAC	154 - 10
VTL10E7B	VAC	154 - 11
VTL10G1	♦VAC	150 -109
VTL10G1A	♦VAC	150 -110
VTL10G1B	♦VAC	151 - 1
VTL10G2	♦VAC	151 - 2
VTL10G2A	♦VAC	151 - 3
VTL10G2B	♦VAC	151 - 4
VTL10G3	♦VAC	151 - 5
VTL10G3A	♦VAC	151 - 6
VTL10G3B	♦VAC	151 - 7
VTL11D1	♦VAC	153 - 88
VTL11D1A	VAC	153 - 89
VTL11D1B	VAC	153 - 90
VTL11D2	♦VAC	155 - 38
VTL11D2A	VAC	155 - 39
VTL11D2B	VAC	155 - 40
VTL11D3	♦VAC	156 - 82
VTL11D3A	VAC	156 - 83
VTL11D3B	VAC	156 - 84
VTL11D4	♦VAC	157 - 36
VTL11D4A	VAC	157 - 37
VTL11D4B	VAC	157 - 38
VTL11D5	♦VAC	153 - 91
VTL11D5A	VAC	153 - 92
VTL11D5B	VAC	153 - 93
VTL11D6	♦VAC	151 - 96
VTL11D6A	VAC	151 - 97
VTL11D6B	VAC	151 - 98
VTL11D7	♦VAC	154 - 23
VTL11D7A	VAC	154 - 24
VTL11D7B	VAC	154 - 25
VTL11E1	VAC	152 - 62
VTL11E1A	VAC	152 - 63
VTL11E1B	VAC	152 - 64
VTL11E2	VAC	154 - 41
VTL11E2A	VAC	154 - 42
VTL11E2B	VAC	154 - 43
VTL11E3	VAC	156 - 51
VTL11E3A	VAC	156 - 52
VTL11E3B	VAC	156 - 53
VTL11E5	VAC	152 - 65
VTL11E5A	VAC	152 - 66
VTL11E5B	VAC	152 - 67
VTL11E6	VAC	151 - 78
VTL11E6A	VAC	151 - 79
VTL11E6B	VAC	151 - 80
VTL11E7	VAC	154 - 12
VTL11E7A	VAC	154 - 13
VTL11E7B	VAC	154 - 14
VTL12D1	♦VAC	153 - 94
VTL12D1A	VAC	153 - 95
VTL12D1B	VAC	153 - 96
VTL12D2	♦VAC	155 - 41
VTL12D2A	VAC	155 - 42
VTL12D2B	VAC	155 - 43
VTL12D3	♦VAC	156 - 85
VTL12D3A	VAC	156 - 86
VTL12D3B	VAC	156 - 87
VTL12D4	♦VAC	157 - 39
VTL12D4A	VAC	157 - 40
VTL12D4B	VAC	157 - 41
VTL12D5	♦VAC	153 - 97
VTL12D5A	VAC	153 - 98
VTL12D5B	VAC	153 - 99
VTL12D6	♦VAC	151 - 99
VTL12D6B	VAC	151 -100
VTL12D7	VAC	154 - 26
VTL12D7A	VAC	154 - 27
VTL12D7B	VAC	154 - 28
VTL12E1	VAC	152 - 68
VTL12E1A	VAC	152 - 69
VTL12E1B	VAC	152 - 70
VTL12E2	VAC	154 - 44
VTL12E2A	VAC	154 - 45
VTL12E2B	VAC	154 - 46
VTL12E3	VAC	156 - 54
VTL12E3A	VAC	156 - 55
VTL12E3B	VAC	156 - 56
VTL12E5	VAC	152 - 71
VTL12E5A	VAC	152 - 72
VTL12E5B	VAC	152 - 73
VTL12E6	VAC	151 - 81
VTL12E6A	VAC	151 - 82
VTL12E6B	VAC	151 - 83
VTL12E7	VAC	154 - 15
VTL12E7A	VAC	154 - 16
VTL12E7B	VAC	154 - 17
VTL13D1	♦VAC	153 -100
VTL13D1A	VAC	153 -101
VTL13D1B	VAC	153 -102
VTL13D2	♦VAC	155 - 44
VTL13D2A	VAC	155 - 45
VTL13D2B	VAC	155 - 46
VTL13D3	♦VAC	156 - 88
VTL13D3A	VAC	156 - 89
VTL13D3B	VAC	156 - 90
VTL13D4	♦VAC	157 - 42
VTL13D4A	VAC	157 - 43
VTL13D4B	VAC	157 - 44
VTL13D5	♦VAC	153 -103
VTL13D5A	VAC	153 -104
VTL13D5B	VAC	153 -105
VTL13D6	♦VAC	151 -101
VTL13D6A	VAC	151 -102
VTL13D6B	VAC	151 -103
VTL13D7	VAC	154 - 29
VTL13D7A	VAC	154 - 30
VTL13D7B	VAC	154 - 31
VTL13E1	VAC	152 - 74
VTL13E1A	VAC	152 - 75
VTL13E1B	VAC	152 - 76
VTL13E2	VAC	154 - 47
VTL13E2A	VAC	154 - 48
VTL13E2B	VAC	154 - 49
VTL13E3	VAC	156 - 57
VTL13E3A	VAC	156 - 58
VTL13E3B	VAC	156 - 59
VTL13E5	VAC	152 - 77
VTL13E5A	VAC	152 - 78
VTL13E5B	VAC	152 - 79
VTL13E6	VAC	151 - 84
VTL13E6A	VAC	151 - 85
VTL13E6B	VAC	151 - 86
VTL13E7	VAC	154 - 18
VTL13E7A	VAC	151 - 87
VTL13E7B	VAC	158 - 53
VTL18D1	♦VAC	153 -106
VTL18D2	♦VAC	155 - 47
VTL18D3	♦VAC	156 - 91
VTL18D4	♦VAC	157 - 45
VTL18D5	♦VAC	153 -107
VTL18D6	♦VAC	151 -104
VTL18D7	♦VAC	154 - 32
VTL18E1	♦VAC	152 - 80
VTL18E2	♦VAC	154 - 50
VTL18E3	♦VAC	156 - 60
VTL18E5	♦VAC	152 - 81
VTL18E6	♦VAC	151 - 88
VTL18E7	♦VAC	154 - 19
VTM3321	♦VAC	117 - 14
VTM3322	♦VAC	118 - 61
VTM3323	♦VAC	117 - 15
VTM7121	♦VAC	115 - 58
VTM7122	♦VAC	116 - 28
VTM7123	♦VAC	117 - 16
VTM7124	♦VAC	118 - 2
VTM7125	♦VAC	116 - 29
VTP100	♦VAC	103 - 86
VTP100A	♦VAC	103 - 87
VTP1012	♦VAC	105 - 10
VTP1013	♦VAC	104 -107
VTP1112	♦VAC	105 - 11
VTP1113	♦VAC	104 -108
VTP1150	♦VAC	105 - 25
VTP1150S	♦VAC	105 - 45
VTP1250	♦VAC	105 - 26
VTP1250S	♦VAC	105 - 5
VTP4050	♦VAC	105 - 27
VTP4050S	♦VAC	104 - 98
VTP5040	♦VAC	108 - 35
VTP5041	♦VAC	108 - 24
VTP5041IR	♦VAC	105 - 28
VTP5050	♦VAC	105 - 20
VTP5051	♦VAC	105 - 7
VTP6060	♦VAC	105 - 32
VTP6061	♦VAC	105 - 12
VTP8350	♦VAC	105 - 29
VTP8350S	♦VAC	104 - 99
VTP8351	♦VAC	105 - 21
VTP8440	♦VAC	105 - 19

Δ-Registered with JEDEC by this manufacturer

♦-Mfr's data sheet available in microfilm service

1. TYPE No. CROSS INDEX

IN TYPE NUMBER SEQUENCE

TYPE No.	MFRS	Pg&Line
VTP8441	♦VAC	105 - 6
VTP8551	♦VAC	105 - 30
VTP8552	♦VAC	104 -110
VTP8651	♦VAC	105 - 31
VTP8652	♦VAC	105 - 1
VTP9412	♦VAC	105 - 13
VTP9413	♦VAC	104 -109
VTR16D1	♦VAC	159 -102
VTR17D1	♦VAC	159 -103
VTR17D1C	♦VAC	159 -104
VTS1188	♦VAC	111 - 63
VTS1188L	♦VAC	111 - 61
VTS2011	♦VAC	144 - 1
VTS2012	♦VAC	144 - 4
VTS2013	♦VAC	144 - 8
VTS2014	♦VAC	144 - 14
VTS2018	♦VAC	144 - 23
VTS2020	♦VAC	144 - 26
VTS2022	♦VAC	144 - 50
VTS2024	♦VAC	144 - 31
VTS2026	♦VAC	144 - 52
VTS2028	♦VAC	144 - 37
VTS2050	♦VAC	144 - 43
VTS2060	♦VAC	146 - 41
VTS2061	♦VAC	146 - 43
VTS2062	♦VAC	146 - 51
VTS2063	♦VAC	146 - 77
VTS2064	♦VAC	146 - 84
VTS2065	♦VAC	146 - 86
VTS2066	♦VAC	146 - 94
VTS2067	♦VAC	147 - 10
VTS2070	♦VAC	138 - 22
VTS2071	♦VAC	138 - 19
VTS2072	♦VAC	138 - 15
VTS2073	♦VAC	138 - 13
VTS2074	♦VAC	138 - 10
VTS2075	♦VAC	138 - 7
VTS2076	♦VAC	138 - 3
VTS2077	♦VAC	138 - 1
VTS2080	♦VAC	138 -103
VTS2081	♦VAC	138 - 93
VTS2082	♦VAC	138 - 77
VTS2083	♦VAC	138 - 73
VTS2084	♦VAC	138 - 61
VTS2085	♦VAC	138 - 58
VTS2086	♦VAC	138 - 46
VTS2087	♦VAC	138 - 44
VTS3011	VAC	144 - 2
VTS3012	VAC	144 - 5
VTS3013	VAC	144 - 9
VTS3014	VAC	144 - 15
VTS3018	VAC	144 - 24
VTS3020	VAC	144 - 27
VTS3022	VAC	144 - 51
VTS3024	VAC	144 - 32
VTS3026	VAC	144 - 53
VTS3028	VAC	144 - 38
VTS3050	VAC	144 - 44
VTS3060	VAC	146 - 42
VTS3061	VAC	146 - 44
VTS3062	VAC	146 - 52
VTS3063	VAC	146 - 78
VTS3064	VAC	146 - 85
VTS3065	VAC	146 - 87
VTS3066	VAC	146 - 95
VTS3067	VAC	147 - 11
VTS3070	♦VAC	138 - 23
VTS3071	♦VAC	138 - 20
VTS3072	♦VAC	138 - 16
VTS3073	♦VAC	138 - 14
VTS3074	♦VAC	138 - 11
VTS3075	♦VAC	138 - 8
VTS3076	♦VAC	138 - 4
VTS3077	♦VAC	138 - 2
VTS3080	♦VAC	138 -104
VTS3081	♦VAC	138 - 94
VTS3082	♦VAC	138 - 78
VTS3083	♦VAC	138 - 74
VTS3084	♦VAC	138 - 62
VTS3085	♦VAC	138 - 59
VTS3086	♦VAC	138 - 47
VTS3087	♦VAC	138 - 45
VTS4075	♦VAC	138 - 9
VTS4085	♦VAC	138 - 34
VTS4085H	♦VAC	111 - 64
VTS4085S	♦VAC	111 - 62
VTS5076	♦VAC	138 - 5
VTS5078	♦VAC	138 - 6
VTS5086	♦VAC	138 - 32
VTS5088	♦VAC	138 - 33
VTS6079	♦VAC	138 - 12
VTS6089	♦VAC	138 - 35
VTS7070A	♦VAC	138 - 21
VTS7080A	♦VAC	138 - 36
VTT1010	♦VAC	117 - 42
VTT1011	♦VAC	116 - 22
VTT1012	♦VAC	115 -100
VTT1013	♦VAC	118 - 48
VTT1020	♦VAC	115 - 62
VTT1021	♦VAC	115 - 79
VTT1022	♦VAC	116 - 7
VTT1023	♦VAC	116 - 99
VTT1031	♦VAC	117 - 48
VTT1032	♦VAC	118 - 99
VTT1033	♦VAC	119 - 77
VTT1110	♦VAC	117 - 51
VTT1111	♦VAC	118 - 22
VTT1112	♦VAC	118 - 95
VTT1113	♦VAC	119 - 74
VTT1114	♦VAC	119 -105
VTT1120	♦VAC	115 -108
VTT1121	♦VAC	116 -102
VTT1122	♦VAC	117 - 83
VTT1123	♦VAC	118 - 79
VTT1131	♦VAC	117 - 26
VTT1132	♦VAC	118 - 90
VTT1133	♦VAC	119 - 73
VTT3121	♦VAC	116 - 51
VTT3121E	♦VAC	116 - 52
VTT3122	♦VAC	117 - 80
VTT3122E	♦VAC	117 - 81
VTT3123	♦VAC	118 - 96
VTT3123E	♦VAC	118 - 97
VTT3321	♦VAC	117 - 52
VTT3322	♦VAC	118 - 23
VTT3323	♦VAC	118 - 98
VTT3324	♦VAC	119 - 32
VTT3325	♦VAC	119 - 80
VTT7111	♦VAC	116 - 76
VTT7112	♦VAC	118 - 37
VTT7113	♦VAC	118 - 86
VTT7114	♦VAC	119 - 23
VTT7121	♦VAC	116 - 77
VTT7122	♦VAC	117 - 69
VTT7123	♦VAC	118 - 38
VTT7124	♦VAC	118 - 80
VTT7125	♦VAC	119 - 11
VTT7221	♦VAC	115 -107
VTT7222	♦VAC	116 - 45
VTT7223	♦VAC	117 - 43
VTT7224	♦VAC	117 - 97
VTT7225	♦VAC	118 - 43
VTT9011	♦VAC	116 - 53
VTT9012	♦VAC	118 - 24
VTT9013	♦VAC	119 - 19
VTT9111	♦VAC	118 - 25
VTT9112	♦VAC	119 - 37
VTT9113	♦VAC	119 - 97
VTT9310	♦VAC	115 -102
VTT9311	♦VAC	116 - 24
VTT9312	♦VAC	117 - 67
VTT9313	♦VAC	118 - 56
VTT9320	♦VAC	115 - 63
VTT9321	♦VAC	115 - 80
VTT9322	♦VAC	116 - 5
VTT9323	♦VAC	116 - 95
XA/RA1000	♦MAI	232 - 47
XC10A	♦TFS	83 - 50
XC10B	♦TFS	84 - 49
XC10C	♦TFS	84 - 99
XC10D	♦TFS	85 - 47
XC55FLCA	♦TFS	83 - 98
XC55FLCB	♦TFS	84 - 88
XC55FLCC	♦TFS	85 - 70
XC55FLCD	♦TFS	85 - 99
XC55PLCA	♦TFS	83 - 99
XC55PLCB	♦TFS	84 - 89
XC55PLCC	♦TFS	85 - 71
XC55PLCD	♦TFS	85 -100
XC88-30	♦TFS	87 - 98
XC88-50	♦TFS	88 - 35
XC88FLCA	♦TFS	86 - 28
XC88FLCB	♦TFS	86 - 64
XC88FLCC	♦TFS	86 - 91
XC88FLCD	♦TFS	87 - 4
XC88LC30	♦TFS	87 - 99
XC88LC50	♦TFS	88 - 36
XC88PLCA	♦TFS	86 - 29
XC88PLCB	♦TFS	86 - 65
XC88PLCC	♦TFS	86 - 92
XC88PLCD	♦TFS	87 - 5
XC111	♦TFS	42 - 66
XC484	♦TFS	46 - 19
XC485	♦TFS	72 - 36
XC500A	♦TFS	120 - 27
XC500B	♦TFS	120 - 20
XC500C	♦TFS	120 - 10
XC500D	♦TFS	119 - 91
XC800W	♦TFS	116 - 4
XC801W	♦TFS	116 - 46
XC802W	♦TFS	118 - 51
XC880AE	TFS	83 - 51
XC880BE	TFS	84 - 50
XC880CE	TFS	85 - 24
XC944A	♦TFS	82 - 83
XC944B	♦TFS	83 - 58
XC944C	♦TFS	84 - 14
XC944D	♦TFS	84 - 55
XC945A	♦TFS	82 - 84
XC945B	♦TFS	83 - 59
XC945C	♦TFS	84 - 15
XC945D	♦TFS	84 - 56
XC1288B	♦TFS	84 - 51
XC1510R3	♦TFS	51 - 51
XC4850-5VG	♦TFS	70 - 1
XD/RD1000	♦MAI	232 - 48
XDS2724P	♦GIC	202 - 2
XDS2724S	♦GIC	202 - 3
XDS2732P(A)	♦GIC	202 - 4
XDS2732S(A)	♦GIC	202 - 5
Y32	♦GIC	62 - 57
YAG100	♦EGG	103 - 35
YAG444	♦EGG	103 - 36
YAG444-2	♦EGG	106 - 4
YAG444-4	♦EGG	103 - 37
YBG1000	♦SIEG	93 -107
	♦SIEX	
YBG4840	♦SIEG	93 -108
	♦SIEX	
YL56	♦SIEG	65 - 26
	♦SIEX	
YLB2400(A)	♦SIEG	89 - 86
	♦SIEX	
YLB2450(A)	♦SIEG	90 - 64
	♦SIEX	
YLB2700	♦SIEG	90 - 61
	♦SIEX	
YLB2720(A)	♦SIEG	
	♦SIEX	
YLB2755(A)	♦SIEG	
	♦SIEX	
YLB2785(A)	♦SIEG	
	♦SIEX	
ZM100(2)	♦FERB	
ZME60	♦FERB	
ZMP31	♦FERB	
ZMP51	♦FERB	
ZNP100	♦FERB	
ZNP102	♦FERB	
ZNP103	♦FERB	

Δ-Registered with JEDEC by this manufacturer

♦-Mfr's data sheet available in microfilm service

IN ORDER OF COLOR AND: (1) INTENSITY (2) IF TEST (3) BEAM ANGLE & (4) TYPE No.

LED LAMP, RED

LINE No.	4 TYPE NUMBER	1 LUMINOUS INTENSITY MIN (cd)	2 IF TEST (A)	3 BEAM ANGLE θ HI (°)	LENS TYPE	LAMP STYLE	VF MAX (V)	IF TEST (A)	PD RATED MAX (W)	IF RATED MAX (A)	PEAK WAVE-LENGTH λP (m)	TEMP. RANGE CODE - +	FEATURES	LEAD CODE	OUTLINE DRAWING
4	555-2005				Diffused		10 §	14m			650n	57		A	None
5	555-3005				Diffused		10 §	14m			650n	57		A	None
6	CLCLL2041						2.5	20m			700n		Vr 3V,P rad 1.2mW		PD1422
7	FED071X(A)						3.0	100m		150m	730n	49Ø		A Ø	PD42p
8	FED073K1WA			10			2.8	100m		150m	730n	49	DIREC		PD1121
9	FPE800						2.0	20m	100m	100m	670n	5A		A	PD608a
10	LN122DF			32			2.6	20m	120m	40m	660n	28	Fiber Optc	B	PD8d
11	LN122DL			8			2.6	20m	120m	40m	660n	28	Fiber Optc	B	PD7c
12	LN122F			27			2.4	20m	150m	50m	680n	28	Fiber Optc	B	PD8d
13	LN122L			8			2.4	20m	150m	50m	680n	28	FO	B	PD7c
14	LN123DF			40			2.6	20m	150m	50m	660n	28	Fiber Optc	B Ø	TO-46
15	LN124D			30			2.4	20m	120m	40m	660n	28	Fiber Optc	A	PD1066
16	LN126			80			2.4	20m	75m	30m	680n	28	Fiber Optc	B	PD118d
17	LN126D			80			2.4	20m	75m	30m	680n	28	Fiber Optc	B	PD118d
18	SS9102			40			5.0	3.2m		3.2m	700n			A	PD69 Ø
19	SVAD1			20			1.5	40m	70m	40m	660n	28		B	PD19
20	SVAD2			20			1.5	40m	70m	40m	660n	28		A	PD18f
21	SVAD4			20			2.3	100m	150m	100m	660n	28		A	PD1116
22	LN122CAL			80		Cylindrical	2.4	20m	100m	40m	680n	28	Fiber Optc	B	PD7x
23	LN122D			80		Cylindrical	2.6	20m	120m	40m	660n	28	Fiber Optc	B	PD7x
24	547-2005				Diffused	Rectangular	10 §	14m			650n	57		A	PD378
25	LN125D			80		Rectangular	2.4	20m	120m	40m	660n	28	Fiber Optc	B	PD1068
26	SLM13V					Rectangular	2.0	10m	75m	25m	650n				PD1140
27	LST1052					T-1	1.6	20m		150n	940n	5A			PD16
28	SVAD3			70		T-1	2.0	20m	70m	30m	660n	28		B	PD118a
29	AL102A		5.0m			Cylindrical	3.2	5.0m		10m		67			PD235
30	LN0204RP2		10m		Diffused	Rectangular	2.2	20m	60m	20m	700n	28		A	PD1070
31	SPR5531SQR		10m		Diffused	Side-mount	25	10m	75m	30m	700n	38		A	PD1112
32	AL102B		20m			Cylindrical	4.5	20m		10m		67			PD235
33	LED1011G	1.3n	10m		Diffused	Rectangular	2.5	10m	180m	50m	700n	28		A	PD909a
34	LED2111	1.3n	10m		Diffused	Rectangular	2.0	20m	180m	50m	655n	28		A	PD909b
35	LED2111G	1.3n	10m		Diffused	Rectangular	2.5	10m	180m	50m	700n	28		A	PD909b
36	LED2112	1.3n	10m		Diffused	Rectangular	2.0	20m	180m	50m	655n	28		A	PD909b
37	LED2112G	1.3n	10m		Diffused	Rectangular	2.5	10m	180m	50m	700n	28		A	PD909b
38	LED2113	1.3n	10m		Water-clear	Rectangular	2.0	20m	180m	50m	655n	28		A	PD909b
39	LED2113G	1.3n	10m		Water-clear	Rectangular	2.5	10m	180m	50m	700n	28		A	PD909b
40	MSB52C	2.0n	20m	20	Water-clear		2.0	20m	180m	70m	660n	4A			PD50z
41	MSB52D	2.0n	20m	40	Diffused		2.0	20m	180m	70m	660n	4A			PD50z
42	MSB52T	2.0n	20m	20	Transparent		2.0	20m	180m	70m	660n	4A			PD50z
43	LED1011	700n					2.0	20m	100m	35m	665n	5A			PD544
44	LED3665	700n				T-1	2.0	20m	100m	35m	665n	5A			PD257b
45	LED5665	700n				T-1 3/4	2.0	20m	100m	35m	665n	5A			PD56c
46	CQS93	700n	20m	60	Diffused	T-1	2.8	20m	70m%	25m	700n	A §		A	PD322 Ø
47	HLMP6300-010	1.0u	10m	90	Diffused	Rectangular	3.0	10m	135m	30m	635n	5A		A	PD380a
48	LTL1204A	20u	10m	120	Diffused	Cylindrical	2.0	20m	80m	40m	655n	5A		A	PD1218
49	LTL1214A	20u	10m	120	Diffused	Cylindrical	2.8	20m	40m	15m	697n	5A		A	PD1218
50	LTL6203LN	50u	10m	70		Arch	2.8	20m	80m	40m	655n	5A	Flat	A	PD1225
51	LTL23201AL	50u	10m	130	Diffused	Rectangular	2.0	20m	80m	40m	655n	5A		A	PD1232
52	GL2PR1	90u	5.0m			Cylindrical	2.3	5.0m	23m	10m	695n	28		A	PD333
53	GL9PR22	100u	5.0m		Diffused		2.3	5.0m	23m	10m	695n	28			PD489
54	GL9PR10	100u	5.0m		Diffused	Rectangular	2.3	5.0m	23m	10m	695n	28			PD484
55	MT1110R	100u†	10m		Water-clear		1.5	10m		15m	700n	27	Axial;DO34 case	♦	PD1354
56	SR510(A)	100u	10m		Water-clear		2.5	10m	60m	30m	695n	4A%		B	PD472
57	LTL2201A	100u	10m	180		Cylindrical	2.0	20m	80m	40m	655n	5A		♦	PD1285
58	TLR121	100u	10m		Water-clear	Cylindrical	2.6	15m	60m	15m	700n	27		A	PD331 Ø
59	TLR122	100u	10m	50	Water-clear	Cylindrical	2.6	15m	60m	15m	700n	27		A	PD331
60	TLSR3700	100u	10m	100	Diffused	Cylindrical	2.0	10m	100m	50m	660n	5A%			PD1195
61	ED102RKB	.10m	10m		Diffused	Panel-mount	2.8	20m	80m	30m	700n	5A		A	PD359
62	AND121R	100u	10m	50	Transparent	Rectangular	2.6	15m	60m	15m	700n	57		A	PD331
63	AND122R	100u	10m	50	Water-clear	Rectangular	2.6	15m	60m	15m	700n	57		A	PD331
64	LTL3201A	100u	10m	124	Diffused	Rectangular	2.0	20m	80m	40m	655n	5A		A	PD1220
65	LTL13218A	100u	10m	180	Diffused	Rectangular	2.8	20m	40m	15m	697n	5A		A	PD1230
66	LTL13219B	100u	10m	170		Rectangular	2.8	20m	40m	15m	697n	5A		♦	PD1231
67	LTL23203A	100u	10m	140		Rectangular	2.0	20m	80m	40m	655n	5A		A	PD1364
68	LTL23211AL	100u	10m	130	Diffused	Rectangular	2.8	20m	40m	15m	697n	5A		A	PD1232
69	LTL23214A	100u	10m	125		Rectangular	2.8	20m	40m	15m	697n	5A		A	PD1365
70	SR110	.10m	10m		Water-clear	Rectangular	1.9	10m	100m	50m	660n	4A		B	PD262d
71	TLSR3600	100u	10m	100	Diffused	Rectangular	2.0	10m	100m	50m	660n	5A%			PD1194
72	AND102R	100u	10m	200	Diffused	T-1	2.8	20m	75m	25m	700n	57		A	PD118a
73	AND109R	100u	10m	200	Milk-white	T-1	2.8	20m	75m	25m	700n	57		A	PD118a
74	LN210WP	100u	15m		Diffused	Rectangular	2.8	20m	70m	25m	700n	3A%		A	PD323
75	TLSR6600	100u	20m	100			2.0	20m	100m	50m	660n	5A%			PD1196
76	MV5025	100u	20m	180	Diffused	Cylindrical	2.0	20m	180m	100m	660n	5A		♦	PD89a
77	MV5026	100u	20m	90	Diffused	Cylindrical	2.0	20m	180m	100m	660n	5A		♦	PD89a
78	CMD5025	100u	20m	180	Diffused	T-1 3/4	2.0	20m	180m	100m	660n	5A		A	PD1143
79	CMD5026	100u	20m	90	Diffused	T-1 3/4	2.0	20m	180m	100m	660n	5A		A	PD1143
80	CMD5055	100u	20m	150	Diffused	T-1 3/4	2.2	20m	180m	100m	660n	5A		A	PD16ao
81	LTL2203A	110u	10m	200		Cylindrical	2.0	20m	80m	40m	655n	5A		A	PD1219
82	LTL2213A	110u	10m	200		Cylindrical	2.8	20m	40m	15m	697n	5A		A	PD1219
83	GL2AR1	120u	20m			Cylindrical	1.9	20m	80m	40m	655n	28		A	PD333
84	E1000	150u				Cylindrical	1.2	20m		50m	660n			A	PD16f
85	GL9PR3	150u	5.0m				2.3	5.0m	23m	10m	695n	28		A	PD335
86	GL9PR6	150u	5.0m		Diffused		2.3	5.0m	23m	10m	695n	28			None
87	GL9PR2	150u	5.0m			Rectangular	2.3	5.0m	23m	10m	695n	28		A	PD334
88	GL9PR4	150u	5.0m			Rectangular	2.3	5.0m	23m	10m	695n	28		A	PD334a
89	GL9PR9	150u	5.0m		Diffused	Rectangular	2.3	5.0m	23m	10m	695n	28			PD490
90	AND226R	.15m	10m		Diffused		2.8	20m	56m	20m	700n	5A		A	PD427
91	LTL5209	150u	10m	114	Diffused		2.0	20m	80m	40m	655n	5A		♦	PD1213a
92	LTL2211A	150u	10m	180		Cylindrical	2.8	20m	40m	15m	697n	5A		♦	PD1285
93	LTL2214RT	150u	10m	150	Transparent	Cylindrical	2.8	20m	40m	15m	697n	5A		B	PD1362
94	LTL2214WC	150u	10m	150	Water-clear	Cylindrical	2.8	20m	40m	15m	697n	5A		B	PD1362
95	TLR226	150u	10m		Diffused	Cylindrical	2.8	20m	56m	20m	700n	27		A	PD427
96	AND108R	150u	10m	200	Transparent	T-1	2.8	20m	75m	25m	700n	57		A	PD118a
97	AND101R	150u	15m	220	Diffused		2.8	30m	100m	35m	700n	27		A	PD12h
98	TLR101	150u	15m	220	Diffused	Cylindrical	2.8	30m	100m	35m	700n	27		A	PD12h
99	LN242RPH	150u	15m		Diffused	Rectangular	28	20m	70m	25m	700n	3A%		A	PD913
100	TLSR3701	160u	10m	100	Diffused	Cylindrical	2.0	10m	100m	50m	660n	5A%			PD1195
101	TLSR3601	160u	10m	100	Diffused	Rectangular	2.0	10m	100m	50m	660n	5A%			PD1194
102	TLSR5600	160u	10m	100	Diffused	Rectangular	2.0	10m	100m	50m	660n	5A%		A	PD1005a
103	TLSR5700	160u	10m	100	Diffused	Rectangular	2.0	10m	100m	50m	660n	5A%		A	PD1006
104	TLSR5500	160u	10m	100	Diffused	Triangular	2.0	10m	100m	50m	660n	5A%			PD631
105	CMD55A	200u		28	Diffused		3.0	20m	105m	35m	635m	5A			PD1145
106	HLMP1740	200u	2.0m	140	Diffused		2.2	2.0m	27m	7.0m	635m	5A			PD1338
107	521-9195	200u	3.0m	40	Diffused	T-3/4	2.0	3.0m	80m	40m	650n	5A		B	PD36a
108	HLMP6620	200u	4.0m	90	Diffused	T-3/4	6.0 §	5.0m	375m		635n	57		A	PD180a
109	GL9PR23	200u	5.0m		Diffused		2.3	5.0m	23m	10m	695n	28			None
110	SLP103A	200u†	5.0m		Water-clear		1.8	5.0m	25m	10m	700n	26		A	PD1312

SYMBOLS AND CODES EXPLAINED IN INTERPRETER

2. LED LAMPS - Red (Cont'd)

IN ORDER OF COLOR AND: (1) INTENSITY (2) IF TEST (3) BEAM ANGLE & (4) TYPE No.

LINE No.	4 TYPE NUMBER	1 LUMINOUS INTENSITY MIN (cd)	2 IF TEST (A)	3 BEAM ANGLE θ HI (°)	LENS TYPE	LAMP STYLE	VF MAX (V)	IF TEST (A)	PD RATED MAX (W)	IF RATED MAX (A)	PEAK WAVE-LENGTH λP (m)	TEMP. RANGE CODE - +	FEATURES	LEAD CODE	OUTLINE DRAWING
1	SLP104A	200u†	5.0m		Water-clear		1.8	5.0m	25m	10m	700n	26		A	PD1312a
2	SLP158B	200u†	5.0m		Diffused		1.9	5.0m	70m	25m	700n	28		♦	PD1315
3	GL3PR3	200u	5.0m			T-1	2.3	5.0m	23m	10m	695n	27		A	PD279
4	LST4053F	200u	5.0m	80	Diffused	T-1 3/4	2.8	20m	120m	40m	690n	5A		A	PD16ag
5	MV55A	.20m	5.0m			T-3/4	2.0	5.0m	105m	400m	635n	5A		A	PD36a
6	LTL5203	200u	10m	64	Diffused		2.0	20m	80m	40m	655n	5A		♦	PD1213a
7	SEL1112R	200u	10m		Diffused		2.5	10m		30m	700n	28		A	PD500
8	SEL1120R	200u	10m		Diffused		2.5	10m		30m	700n	3A		A	PD497
9	SEL1121R	200u	10m		Diffused		2.5	10m		30m	700n	3A		A	PD498
10	SEL1122P	200u	10m		Diffused		2.5	10m		30m	700n	28	Pink Colored Pkg	A	PD484c
11	SEL1131R	200u	10m		Diffused		2.5	10m		30m	660n	28		A	PD501
12	SEL1132R	0.2m	10m		Diffused		2.5	10m	90m	30m	700n	3A		A	PD942
13	SEL1134R	0.2m	10m		Diffused		2.5	10m	90m	30m	700n	3A		A	PD943
14	SEL1141R	200u	10m		Diffused		2.5	10m		30m	700n	28		A	PD502
15	SR535D	.20m	10m				2.5	10m	60m	30m	695n	4A%		A	PD426
16	SR538D	200u	10m				2.5	10m	60m	30m	695n	4A%		A	PD1241
17	SR539D	200u	10m				2.5	10m	60m	30m	695n	4A%		A	PD1243
18	SR531D	0.2m	10m			Cylindrical	2.5	10m	60m	30m	695n	4A%		A	PD468
19	LTL3211A	200u	10m	124	Diffused	Rectangular	2.8	20m	40m	15m	697n	5A		A	PD1220
20	LTL3213A	200u	10m	130	Diffused	Rectangular	2.8	20m	40m	15m	697n	5A		A	PD1221
21	LTL3215S	200u	10m	150	Diffused	Rectangular	2.8	20m	40m	15m	697n	5A		A	PD1222
22	LTL3218A	200u	10m	106	Diffused	Rectangular	2.8	20m	40m	15m	697n	5A		A	PD1224
23	LTL13215A	200u	10m	150		Rectangular	2.8	20m	40m	15m	697n	5A		♦	PD1363
24	LTL23213A	200u	10m	140		Rectangular	2.8	20m	40m	15m	697n	5A		A	PD1364
25	SEL1123R	200u	10m		Diffused	Rectangular	2.5	10m	90m	30m	700n	3A		A	PD383
26	SEL1124R	0.2m	10m		Diffused	Rectangular	2.5	10m	90m	30m	700n	3A		A	PD383a
27	SR536D	0.2m	10m			Rectangular	2.5	60m	30m	40m	695n	4A%		A	PD951
28	SR537D	0.2m	10m			Rectangular	2.5	60m	30m	40m	695n	4A%		A	PD949
29	LTL9212A	200u	10m	100		Square	2.8	20m	40m	15m	697n	5A		♦	PD1366
30	LTL9213A	200u	10m	150	Diffused	Square	2.8	20m	40m	15m	697n	5A		A	PD1227
31	LTL9214A	200u	10m	120	Diffused	Square	2.8	20m	40m	15m	697n	5A		A	PD1228
32	SEL1142R	0.2m	10m		Diffused	Square	2.5	10m	90m	30m	700n	3A		A	PD944
33	GL3AR3	200u	10m			T-1	1.9	10m	80m	40m	655n	27		A	PD279
34	LTL8212A	200u	10m	100	Diffused	Triangular	2.8	20m	40m	15m	697n	5A		A	PD1226
35	SR533D	0.2m	10m			Triangular	2.5	10m	60m	30m	695n	4A%		A	PD948
36	NSL4944	200u	12m	110	Diffused	Cylindrical	18 §	18m	300m		660n	5A	Current-regulated	A	PD28b
37	521-9214	200u	20m	50		Cylindrical	3.0	20m	100m	50m	665n	5A		A	PD63
38	CMD5056	200u	20m	110	Diffused	T-1 3/4	2.2	20m	180m	100m	660n	5A		A	PD16ao
39	TLSR3200	250u	10m	100	Diffused	Cylindrical	2.0	10m	100m	50m	660n	5A%			PD1191
40	TLYR5500	250u*	10m	80	Transparent	Cylindrical	2.1	20m	100m	50m	650n	XA§	For Fiber Optics		PD1385
41	TLSR2100	250u	10m	100	Diffused	Rectangular	2.0	20m	100m	50m	660n	5A%			PD489c
42	TLSR3300	250u	10m	100	Diffused	Rectangular	2.0	10m	100m	50m	660n	5A%			PD1192
43	TLSR5100	250u	10m	100	Diffused	Rectangular	2.0	20m	100m	50m	660n	5A%			PD627
44	TLSR5300	250u	10m	100	Diffused	Rectangular	2.0	20m	100m	50m	660n	5A%			PD629
45	TLSR5601	250u	10m	100	Diffused	Rectangular	2.0	10m	100m	50m	660n	5A%		A	PD1005a
46	TLSR5701	250u	10m	100	Diffused	Rectangular	2.0	10m	100m	50m	660n	5A%		A	PD1006
47	TLPR5600	250u	10m	80	Diffused	Side-mount	2.0	10m	100m	50m	660n	5A%	Side View		PD1183
48	TLSR5200	250u	10m	100	Diffused	T-1 3/4	2.0	20m	100m	50m	660n	5A%			PD628
49	TLSR3400	250u	10m	100	Diffused	Triangular	2.0	10m	100m	50m	660n	5A%			PD1193
50	TLSR5400	250u	10m	100	Diffused	Triangular	2.0	10m	100m	50m	660n	5A%			PD630
51	TLSR5501	250u	10m	100	Diffused	Triangular	2.0	10m	100m	50m	660n	5A%			PD631
52	RRL5601	300u		40	Diffused	Arch	6.0 §				650n	5A%	Internal Resistor	A	PD81 Ø
53	521-9215	300u		150	Diffused	Cylindrical	5.0	20m	100m	50m	655n	5A		B	PD77e
54	558-0102-001	300u				Panel-mount	5.0	20m		50m	655n	5A	Internal Resistor	♦	PD990
55	558-0102-003	300u				Panel-mount	5.0	20m		50m	655n	5A	Internal Resistor	♦	PD990a
56	558-0102-004	300u				Panel-mount	5.0	20m		50m	655n	5A	Internal Resistor	♦	PD990b
57	558-0102-005	300u				Panel-mount	5.0	20m		50m	655n	5A	Built-In Resistor	♦	PD990c
58	558-0102-006	300u				Panel-mount	5.0	20m		50m	655n	5A	Internal Resistor	♦	PD990d
59	558-0102-007	300u				Panel-mount	5.0	20m		50m	655n	5A	Internal Resistor	♦	PD990e
60	HLMP1142	.30m		100	Diffused	T-1	2.9	50m			655n	58		B	PD77m
61	GL4PR2	300u	5.0m			Cylindrical	2.3	5.0m	23m	10m	695n	28		A	PD279b
62	GL9PR12	0.3m	5.0m		Milk-white	Square	2.3	5.0m	23m	10m	695n	28			None
63	GL9PR19	0.3m	5.0m		Milk-white	Square	2.3	5.0m	23m	10m	695n	28			None
64	GL9PR24	0.3m	5.0m			Square	2.3	5.0m	23m	10m	695n	28			None
65	GL9PR34	0.3m	5.0m		Milk-white	Square	2.3	5.0m	23m	10m	695n	28			None
66	LTL709R	300u	10m	38	Diffused		2.0	20m	80m	40m	655n	5A	mini	A	PD1286
67	LTL5219	300u	10m	150	Diffused		2.8	20m	40m	15m	697n	5A		♦	PD1213a
68	LTL10203W	300u	10m	60	Diffused		2.0	20m	80m	40m	655n	5A		A	PD1214
69	MT220R	300u	10m	60	Transparent		2.6	15m	60m	15m	700n	27	Mini; Axial	A	PD331
70	SR540D	300u	10m				2.5	10m	60m	30m	695n	4A%		A	PD1244
71	LTL1202A	300u†	10m		Diffused	Cylindrical	2.0	20m			655n			A	PD1217
72	SPR2434DEB	0.3m	10m		Diffused	Cylindrical	2.5	10m	75m	30m	700n	38		A	PD588
73	LTL603-1	300u	10m	60	Diffused	Panel-mount	2.0	20m	80m	40m	655n	5A	Cylindrical	B	PD1215
74	LTL3217A	300u	10m	120	Diffused	Rectangular	2.8	20m	40m	15m	697n	5A		A	PD1223
75	LTL13211AL	300u	10m	130	Diffused	Rectangular	2.8	20m	40m	15m	697n	5A		A	PD1229
76	SPR5551REC	0.3m	10m		Diffused	Rectangular	2.5	10m	75m	30m	700n	38			PD1376
77	SPR5552REC	0.3m	10m		Diffused	Rectangular	2.5	10m	75m	30m	700n	38			PD1377
78	SPR5556REC	0.3m	10m		Diffused	Rectangular	2.5	10m	75m	30m	700n	38			PD1378
79	LTL503-11	300u	10m	60	Diffused	Side-mount	2.0	20m	80m	40m	655n	5A	Cylindrical	A	PD1216
80	PR2651K	0.3m	10m		Diffused	Square	2.5	10m	75m	30m	700n	38			PD1380
81	SPR5551SQR	0.3m	10m		Diffused	Square	2.5	10m	75m	30m	700n	38			PD1112
82	LTL4201	300u	10m	40	Diffused	T-1	2.0	20m	80m	40m	655n	5A		♦	PD1212
83	LTL203	300u	10m	54	Diffused	T-1 3/4	2.0	20m	80m	40m	655n	5A		♦	PD1211
84	LTL4203	300u	10m	36	Diffused	T-1 3/4	2.0	20m	80m	40m	655n	5A		♦	PD1211
85	LTL5103	300u	10m	65	Diffused	T-1 3/4	2.0	20m	80m	40m	655n	5A		♦	PD1211
86	LTL10203	300u	10m	60	Diffused	T-1 3/4	2.0	20m	80m	40m	655n	5A		A	PD1210b
87	SPR5552TRI	0.3m	10m		Diffused	Triangular	2.5	10m	75m	30m	700n	38			PD1111
88	ED107R	.30m	15m		Water-clear		2.8	30m	100m	35m	700n	5A		A	PD128
89	551-0505	300u†	15m	60	Diffused	Rectangular	5.0 §	15m		20m	655n	5A		A	PD382
90	AND208R	0.3m	15m		Diffused	Rectangular	2.8	20m	56m	20m	700n	5A		♦	PD540
91	LN230RP	.30m†	15m		Diffused	Rectangular	2.1	20m	70m	25m	700n	3A%			PD439
92	TLR208	300u	15m		Diffused	Rectangular	2.8	20m	56m	20m	700n	27		A	PD540
93	AND207R	0.3m	15m	1	Diffused	Triangular	2.8	20m	56m	20m	700n	5A		♦	PD425
94	TLR207	300u	15m		Diffused	Triangular	2.8	20m	56m	20m	700n	27		A	PD425
95	CMD5077C	300u	20m	110	Diffused		2.0	20m	100m	50m	660n	5A		A	PD16aq
96	LA6811	300u	20m		Diffused		1.6	10m			655n			A	PD1266
97	LA6811H	300u	20m		Diffused		2.0	10m			700n			A	PD1266
98	LA7011(2)	300u	20m		Diffused		1.6	10m			655n			A	PD1267
99	LA7011H	300u	20m		Diffused		2.0	10m			700n			A	PD1267
100	LA7111	300u	20m		Diffused		1.6	10m			655n			A	PD1268
101	LA7111H	300u	20m		Diffused		2.0	10m			700n			A	PD1268
102	LA7211	300u	20m		Diffused		1.6	10m			655n			A	PD1269
103	LA7211H	300u	20m		Diffused		2.0	10m			700n			A	PD1269
104	LA7411	300u	20m		Diffused		1.6	10m			655n			A	PD1270
105	LA7411H	300u	20m		Diffused		2.0	10m			700n			A	PD1270
106	LA7511	300u	20m		Diffused		1.6	10m			655n			A	PD1271
107	LA7511H	300u	20m		Diffused		2.0	10m			700n			A	PD1271
108	LA7611D	300u	20m		Diffused		1.6	10m			655n			A	PD1272
109	LA7611DH	300u	20m		Diffused		2.0	10m			700n			A	PD1272
110	LA8511	300u	20m		Diffused		1.6	10m			655n			A	PD1273

SYMBOLS AND CODES EXPLAINED IN INTERPRETER

2. LED LAMPS - Red (Cont'd)

IN ORDER OF COLOR AND: (1) INTENSITY (2) IF TEST (3) BEAM ANGLE & (4) TYPE No.

LINE No.	4 TYPE NUMBER	1 LUMINOUS INTENSITY MIN (cd)	2 IF TEST (A)	3 BEAM ANGLE θ HI (°)	LENS TYPE	LAMP STYLE	VF MAX (V)	IF TEST (A)	PD RATED MAX (W)	IF RATED MAX (A)	PEAK WAVE-LENGTH λP (m)	TEMP. RANGE CODE - +	FEATURES	LEAD CODE	OUTLINE DRAWING
1	LA8511H	300u	20m		Diffused		2.0	10m			700n			A	PD1273
2	521-9216	300u	20m	60	Diffused	Cylindrical	2.0	20m	100m	50m	655n	5A		B	PD77e
3	NSL5074	300u	20m	45	Diffused	Cylindrical	2.0	20m	100m	50m	655n	5A		B	PD284c
4	NSL5086	300u	20m	60	Diffused	Cylindrical	2.0	20m	100m	1.0	655n	4A		B	PD77b
5	558-0101-001	300u	20m			Panel-mount	2.0	20m	100m	50m	665n	5A		♦	PD990
6	558-0101-003	300u	20m			Panel-mount	2.0	20m	100m	50m	665n	5A		♦	PD991a
7	558-0101-004	300u	20m			Panel-mount	2.0	20m	100m	50m	665n	5A		♦	PD991b
8	558-0101-005	300u	20m			Panel-mount	2.0	20m	100m	50m	665n	5A		♦	PD991c
9	558-0101-006	300u	20m			Panel-mount	2.0	20m	100m	50m	665n	5A		♦	PD991d
10	558-0101-007	300u	20m			Panel-mount	2.0	20m	100m	50m	665n	5A		♦	PD991e
11	HLMP0904	.3m	20m	60		Panel-mount	2	20m	100m	50m	700n	5A			PD369
12	HLMP0930	.3m	20m	60		Panel-mount	2	20m	100m	50m	700n	5A			PD369
13	HLMP0931	.3m	20m	60		Panel-mount	2	20m	100m	50m	700n	5A			PD369
14	551-0405	300u†	20m	60	Diffused	Rectangular	2.0	20m	100m	50m	655n	5A		A	PD382
15	MR62D	300u	20m		Diffused	Rectangular	2.0	20m			660n				PD484b
16	TLSR3201	350u	10m	100	Diffused	Cylindrical	2.0	10m	100m	50m	660n	5A%			PD1191
17	TLSR2101	350u	10m	100	Diffused	Rectangular	2.0	20m	100m	50m	660n	5A%			PD489c
18	TLSR3301	350u	10m	100	Diffused	Rectangular	2.0	10m	100m	50m	660n	5A%			PD1192
19	TLSR5101	350u	10m	100	Diffused	Rectangular	2.0	20m	100m	50m	660n	5A%			PD627
20	TLSR5301	350u	10m	100	Diffused	Rectangular	2.0	20m	100m	50m	660n	5A%			PD629
21	TLSR5201	350u	10m	100	Diffused	T-1 3/4	2.0	20m	100m	50m	660n	5A%			PD628
22	TLSR3401	350u	10m	100	Diffused	Triangular	2.0	10m	100m	50m	660n	5A%			PD1193
23	TLSR5401(A)	350u	10m	100	Diffused	Triangular	2.0	10m	100m	50m	660n	5A%			PD630
24	OSL50	360u	20m	100		Low-dome	3.2	20m	150m	50m	690n	5A		A	PD59
25	HLMP7000-011	400u	2.0m	70	Diffused		2.2	2.0m	24m	7.0m	635n	5A	High-Efficiency	A	PD1340a
26	HLMP7000-021	400u	2.0m	70	Diffused		2.2	2.0m	24m	7.0m	635n	5A	High-Efficiency	A	PD1341a
27	HLMP7000	400u	2m	70	Diffused	T-3/4	2.2	2m	24m	7m	635n	5A	High-Efficiency	A	PD180a
28	555-3007	400u†	3.0m	70	Diffused		5.0 §	3.0m			650n	57		A	None
29	SLP151B	0.4m†	5.0m		Diffused		1.9	5.0m	70m	25m	700n	28			PD1300
30	SLP154B	400u†	5.0m		Diffused		1.9	5.0m	70m	25m	700n	28		A	PD1302
31	SLP159B	400u†	5.0m		Diffused		1.9	5.0m	70m	25m	700n	28		A	PD1306
32	SLP165B	400u†	5.0m		Diffused		1.9	5.0m	70m	25m	700n	28		A	PD1302a
33	SLP173B01	400u†	5.0m		Diffused		1.9	5.0m	70m	25m	700n	28		A	PD1308
34	SLP174B	400u†	5.0m		Diffused		1.9	5.0m	70m	25m	700n	28		A	PD489b
35	SLP175B	400u†	5.0m		Diffused		1.9	5.0m	70m	25m	700n	28		A	PD1316
36	LLL7A	400u	5.0m	30		T-1	2.6	5.0m	150m	40m	690n	48		A	PD54
37	MSL7A	400u	5.0m	30	Diffused	T-1	2.6	5.0m	150m	40m	690n	48		A	PD55
38	MT210R	400u	10m	60	Water-clear		2.6	15m	60m	15m	700n	27	Mini; Axial	A	PD331
39	SPR5531REC	400u	10m		Diffused		2.5	10m	75m	30m	700n	38		A	PD489c
40	TLR209	400u	10m				2.8	20m	56m	20m	700n	37		A	None
41	TLR210	0.4m	10m		Diffused		2.8	20m	56m	20m	700n	27		A	None
42	TLUR2400	400u	10m	40	Diffused		2.0	10m	100m	50m	660n	5A%	Stackable	A	PD394a
43	LTL6213LN	400u	10m	70		Arch	2.8	20m	40m	15m	697n	5A	Flat	A	PD1225
44	TLAR5400	400u	10m	50	Diffused	Arch	2.0	20m	100m	50m	660n	5A%	Stackable		PD1189
45	TLAR5402	400u	10m	50	Diffused	Arch	2.0	20m	100m	50m	660n	5A%	Stackable		PD1189
46	PR3665S	0.4m	10m		Transparent	Cylindrical	2.5	10m	75m	30m	700n	38	Lens:Pale Red		PD1395
47	PR5562X	0.4m	10m			Cylindrical	2.5	10m	75m	30m	700n	38			PD1394
48	TLMR2200	400u	10m		Transparent	Herm. Can	3.0	10m			635n	5A%	Typ P 70mW,I 23mA	V	PD1384
49	CQX28	400u	10m	50	Diffused	Low-dome	2.0	20m	100m	50m	660n	5A%		A	PD395
50	SPR4632REC	400u	10m		Diffused	Rectangular	2.5	10m	75m	30m	700n	38			PD909c
51	SPR4652REC	0.4m	10m		Diffused	Rectangular	2.5	10m	75m	30m	700n	38			PD1375
52	SPR5532REC	400u	10m		Diffused	Rectangular	2.5	10m	75m	30m	700n	38			PD909c
53	SPR7851REC	0.4m	10m		Diffused	Rectangular	2.5	10m	75m	30m	700n	38			PD1379
54	SR661D(A)	400u	10m			Rectangular	2.5	10m	100m	40m	630n	4A%		A	PD1032
55	MT109R	400u	10m		Diffused	Square	2.8	20m	70m	25m	700n	27		A	PD1351
56	SPR3531SQR	0.4m	10m		Diffused	Square	2.5	10m	75m	30m	700n	38			PD1381
57	TLR124	400u	10m	40	Diffused	T-1	2.8	20m	60m	20m	700n	27		A	PD279c
58	TLUR4400	400u	10m	60	Diffused	T-1	2.0	20m	100m	50m	660n	5A%	DC/Pulse Op		PD1190
59	LTL213	400u	10m	54	Diffused	T-1 3/4	2.8	20m	40m	15m	697n	5A		♦	PD1211
60	LTL10213	400u	10m	60	Diffused	T-1 3/4	2.8	20m	40m	15m	697n	5A		A	PD1210b
61	MV50154	400u	10m	80	Diffused	T-1 3/4	2.0	10m	180m	100m	660n	5A		B	PD47a
62	TLHR5600	400u	10m	160	Diffused	T-1 3/4	3.0	20m	100m	30m	635n	5A%		A	PD280k
63	TLUR5400	400u	10m	60	Diffused	T-1 3/4	2.0	20m	100m	50m	660n	5A%		A	PD280k
64	TLUR5402	400u	10m	60	Diffused	T-1 3/4	2.0	20m	100m	50m	660n	5A%		A	PD280k
65	TLUR6400(A)	400u	10m	60	Diffused	T-1 3/4	2.0	10m	100m	50m	660n	5A%		A	PD284e
66	XC111	400u	10m	45	Water-clear	T-1 3/4	2.8	10m	100m	40m	697n	5A		A	PD18
67	RL54	400u	10m	90	Diffused	T-3/4	2.0	20m	80m	40m	660n	5A%	Miniature;Axial	A	PD81
68	SPR5532TRI	400u	10m		Diffused	Triangular	2.5	10m	75m	30m	700n	38		A	PD1111
69	LN242RP	0.4m†	15m		Diffused		2.2	20m	70m	25m	700n	28		A	PD489a
70	LN250RPH	0.4m†	15m		Diffused		2.2	20m	70m	25m	700n	28		A	PD557b
71	MT140HLR	400u	15m	80	Diffused		2.8	20m	70m	20m	700n	27	Wire-Wrap Leads		PD258b
72	MT140SLR	400u	15m	80	Diffused		2.8	20m	100m	20m	700n	27			PD258c
73	MT2240R	400u	15m	120	Diffused		2.8	20m	70m	25m	700n	27	Side View	A	PD915
74	AND206R	.40m	15m		Diffused	Cylindrical	2.8	20m	56m	20m	700n	5A		A	PD424
75	TLR206	400u	15m		Diffused	Cylindrical	2.8	20m	56m	20m	700n	27		A	PD424
76	AND205R	400u	15m			Rectangular	2.8	20m	56m	20m	700n	27		A	PD383
77	LN210RP	400u†	15m		Diffused	Rectangular	2.1	20m	70m	25m	700n	28		A	PD323
78	TLR205	400u	15m		Diffused	Rectangular	2.8	20m	56m	20m	700n	27		A	PD383
79	AND114R	400u	15m	80	Jewel	T-1 3/4	2.8	20m	90m	20m	700n	57		A	PD215
80	AND116R	400u	15m	80	Jewel	T-1 3/4	2.8	20m	90m	20m	700n	57		A	PD215
81	LA2011	400u	20m	40	Diffused		1.6	10m			655n			A	PD1252
82	LA2011H	400u	20m	40	Diffused		2.0	10m			700n			A	PD1252
83	LA2411	400u	20m	40	Diffused		1.6	10m			655n			A	PD1253
84	LA2411H	400u	20m	40	Diffused		2.0	10m			700n			A	PD1253
85	LA3711D	400u	20m		Diffused		1.6	10m			655n			A	PD1256
86	LA3711DH	400u	20m		Diffused		2.0	10m			700n			A	PD1256
87	LA6011	400u	20m		Diffused		1.6	10m			655n			A	PD1258
88	LA6011H	400u	20m		Diffused		2.0	10m			700n			A	PD1258
89	LA6111	400u	20m		Diffused		1.6	10m			655n			A	PD1259
90	LA6111H	400u	20m		Diffused		2.0	10m			700n			A	PD1259
91	LA6211	400u	20m		Diffused		1.6	10m			655n			A	PD1260
92	LA6211H	400u	20m		Diffused		2.0	10m			700n			A	PD1260
93	LA6311	400u	20m		Diffused		1.6	10m			655n			A	PD1261
94	LA6311H	400u	20m		Diffused		2.0	10m			700n			A	PD1261
95	LA6411	400u	20m		Diffused		1.6	10m			655n			A	PD1262
96	LA6411H	400u	20m		Diffused		2.0	10m			700n			A	PD1262
97	LA6511D	400u	20m		Diffused		1.6	10m			655n			A	PD1263
98	LA6511DH	400u	20m		Diffused		2.0	10m			700n			A	PD1263
99	LA6611H	400u	20m		Diffused		2.0	10m			700n			A	PD1264
100	LA6711	400u	20m		Diffused		1.6	10m			655n			A	PD1265
101	LA6711H	400u	20m		Diffused		2.0	10m			700n			A	PD1265
102	LA9011	400u	20m		Diffused		1.6	10m			655n			A	PD1274
103	LA9011H	400u	20m		Diffused		2.0	10m			700n			A	PD1274
104	NSL5027	400u	20m		Diffused		2.0	20m	180m%	70m	655n	5A	REDL		PD89h
105	LDR5701	400u	20m	100	Diffused	Cylindrical	2.0	20m	200m	60m	665n	5A%	Tr/Tf 5ns Typ	♦	PD932
106	LDR3701	400u	20m	100	Diffused	Rectangular	2.0	20m	200m	60m	665n	5A%	T-1 3/4	♦	PD530 ☑
107	AND124R	400u	20m	50	Diffused	T-1	2.8	20m	60m	20m	700n	57		A	PD279c
108	MV5023	400u	20m	90	Diffused	T-1 1/2	2.0	20m	180m	100m	660n	5A		♦	PD89
109	CMD5023	400u	20m	90	Diffused	T-1 3/4	2.0	20m	180m	100m	660n	5A		A	PD1143
110	CMD5051	400u	80m	80	Water-clear	T-1 3/4	2.2	20m	180m	100m	660n	5A		B	PD16ao

SYMBOLS AND CODES EXPLAINED IN INTERPRETER

2. LED LAMPS - Red (Cont'd)

IN ORDER OF COLOR AND: (1) INTENSITY (2) IF TEST (3) BEAM ANGLE & (4) TYPE No.

LINE No.	4 TYPE NUMBER	1 LUMINOUS INTENSITY MIN (cd)	2 IF TEST (A)	3 BEAM ANGLE θ HI (°)	LENS TYPE	LAMP STYLE	VF MAX (V)	IF TEST (A)	PD RATED MAX (W)	IF RATED MAX (A)	PEAK WAVE-LENGTH λP (m)	TEMP. RANGE CODE - +	FEATURES	LEAD CODE	OUTLINE DRAWING
1	HLMP1660	500u		140	Diffused		7.5	2.0m	27m	7.0m	635m	48	Built-In Resistor		PD1338
2	HLMP1661	500u		140	Diffused		15				635m	48	Built-In Resistor		PD1338
3	CQW10(A)	0.5m			Diffused	Rectangular	2.1	10m	60m	20m	630n	XA§			PD922
4	MT850-5VR	500u	5.0m	80	Diffused		20	5.0m	70m	7.5m	700n	27	w/resistor for 5V	A	PD1162
5	SLP146B	500u†	5.0m		Diffused		1.9	5.0m	70m	25m	700n	28		A	PD1314
6	SLP153B	500u†	5.0m		Diffused		1.9	5.0m	70m	25m	700n	28		A	PD1301
7	SLP155B	500u†	5.0m		Diffused		1.9	5.0m	70m	25m	700n	28		A	PD1300a
8	SLP156B	500u†	5.0m		Diffused		1.9	5.0m	70m	25m	700n	28		♦	PD1305
9	SLP177B	500u†	5.0m		Diffused		1.9	5.0m	70m	25m	700n	28		A	PD1318
10	SLP178C	500u†	5.0m		Transparent		1.9	5.0m	70m	25m	700n	28		A	PD489d
11	GL3PR1	500u	5.0m		Diffused	T-1	2.3	5.0m	23m	10m	695n	27		A	PD279
12	GL3PR2	500u	5.0m		Diffused	T-1	2.3	5.0m	23m	10m	695n	27		A	PD279a
13	521-9294	0.5m	5.0m			T-1 1/2	2.3	5.0m	60m	30m	700n	28		M	PD542
14	GL5PR1	500u	5.0m		Diffused	T-1 3/4	2.3	5.0m	23m	10m	695n	28		A	PD280
15	GL5PR2	500u	5.0m		Diffused	T-1 3/4	2.3	5.0m	23m	10m	695n	28		A	PD280a
16	HLMP6000-011	500u	10m	90	Diffused		2.0	10m	100m	50m	655n	5A		A	PD1340a
17	HLMP6000-021	500u	10m	90	Diffused		2.0	10m	100m	50m	655n	5A		A	PD1341a
18	LTL219	500u	10m	72	Diffused		2.8	20m	40m	15m	635n	5A		♦	PD1210c
19	MT230R	500u	10m	75	Transparent		2.8	20m	60m	20m	700n	27		♦	PD478
20	MT240R	500u	10m	75	Diffused		2.8	20m	60m	20m	700n	27		♦	PD478
21	SR506D	500u	10m				2.6	10m	60m	30m	695n	4A%		A	PD1242
22	CQX10	500u	10m	50	Diffused	Arch	3.0	10m	120m	30m	630n	XA§		A	PD431
23	SPR2531DEB	0.5m	10m		Diffused	Cylindrical	2.5	10m	75m	30m	700n	38		A	PD589
24	CQV60L(A)	.50m	10m	110	Diffused	Rectangular	3.0	110m	90m%	30m	630n	5A			PD1082
25	CQW10L(A)	.50m	10m	100	Diffused	Rectangular	3.0	10m	90m	30m	630n	5A%			PD922
26	HLMP6000-010	500u	10m	90	Diffused	Rectangular	2.0	10m	100m	50m	655n	5A		A	PD380a
27	SR632D	500u	10m		Diffused	Rectangular	2.4	10m	100m	40m	630n	4A%		A	PD467
28	HLMP1300	0.5m	10m		Diffused	T-1	3.0	10m	120m	20m	635n	5A		B	PD77h
29	LTL4211	500u	10m	40	Diffused	T-1	2.8	20m	40m	15m	697n	5A		♦	PD1212
30	TLR123	500u	10m	40	Water-clear	T-1	2.8	20m	60m	20m	700n	27		A	PD279c
31	CQX55	.50m	10m			T-1 3/4	3.0	10m	120m	30m	630n	5A%		A	PD56c
32	CQX56	.50m	10m			T-1 3/4	3.0	10m	120m	30m	630n	5A%		A	PD56c
33	CQX57	.50m	10m			T-1 3/4	3.0	10m	120m	30m	630n	5A%		A	PD56c
34	CQX58	.50m	10m			T-1 3/4	3.0	10m	120m	30m	630n	5A%		A	PD56c
35	LTL5113	500u	10m	65	Diffused	T-1 3/4	2.8	20m	40m	15m	697n	5A		♦	PD1211
36	NSC526R	500u	10m	70	Diffused	T-1 3/4	2.8	10m	100m	40m	697n	5A		A	PD18d
37	RL50	500u	10m	90	Water-clear	T-3/4	2.0	20m	80m	40m	660n	5A%	Miniature;Axial	A	PD81
38	SR506C(1)	0.5m	10m			T-3/4	2.6	10m		40m	695n	4A%		A	PD947
39	SR506D(1)	0.5m	10m			T-3/4	2.6	10m		40m	695n	4A%		A	PD947
40	LN251RCPP	0.5m†	15m		Diffused		2.2	20m	70m	25m	700n	28		A	PD489b
41	MT470R	500u	15m	120	Transparent		2.8	20m	70m	25m	700n	27	Truncated Lens	♦	PD1201
42	MT610R	500u	15m	120	Transparent		2.8	20m	70m	25m	700n	27	Concave Lens Face	A	PD1348
43	AND115R	500u	15m	45	Jewel	Cylindrical	2.8	20m	90m	20m	700n	57		A	PD215a
44	TLR147	0.5m	15m	120	Transparent	Cylindrical	2.8	20m	70m	25m	700n	27		♦	PD1101c
45	AND105RK	500u	15m	60	Jewel	Panel-mount	2.8	30m	100m	35m	700n	57	Cylindrical	A	PD327
46	LN230RPP	0.5m†	15m		Diffused	Rectangular	2.2	20m	70m	25m	700n	28		A	PD439
47	LN233RP	.50m†	15m		Diffused	Rectangular	2.1	20m	70m	25m	700n	3A%			PD361e
48	LN245RP	0.5m†	15m		Diffused	Rectangular	2.2	20m	70m	25m	700n	28		A	PD361f
49	AND113R	500u	15m	50	Jewel	T-1 3/4	2.8	20m	90m	20m	700n	57		A	PD215
50	AND120R	500u	15m	50	Jewel	T-1 3/4	2.8	20m	90m	20m	700n	57		A	PD215
51	CK3R	500u	20m	100			2.0	20m	180m	70m		5A		A	PD283
52	CK5R	500u	20m	100			2.0	20m	180m	70m		5A		A	PD19
53	CL9HD22	500u	20m		Diffused		2.4	20m	70m	30m	635n	28			PD489
54	HLMP1200	.50m	20m	120	Water-clear		2.0	20m	100m	50m	655n	5A		B	PD77g
55	LA2811	500u	20m		Diffused		1.6	10m			655n			A	PD1254
56	LA2811H	500u	20m		Diffused		2.0	10m			700n			A	PD1254
57	LA3011	500u	20m	60	Diffused		1.6	10m			655n			A	PD1247
58	LA3011H	500u	20m	60	Diffused		2.0	10m			700n			A	PD1247
59	LA3611	500u	20m	90	Diffused		1.6	10m			655n			A	PD1247b
60	LA3611H	500u	20m	90	Diffused		2.0	10m			700n			A	PD1247b
61	LA4011	500u	20m	60	Diffused		1.6	10m			655n			A	PD1247c
62	LA4011H	500u	20m	60	Diffused		2.0	10m			700n			A	PD1247c
63	LA4211	500u	20m	60	Diffused		1.6	10m			655n			A	PD1247d
64	LA4211H	500u	20m	60	Diffused		2.0	10m			700n			A	PD1247d
65	LA5011	500u	20m	45	Diffused		1.6	10m			655n			A	PD1248
66	LA5011H	500u	20m	45	Diffused		2.0	10m			700n			A	PD1248
67	LA5711H	500u	20m	60	Diffused		2.0	10m			700n			A	PD1250
68	LA5811	500u	20m		Diffused		1.6	10m			655n			A	PD1257
69	LA5811H	500u	20m		Diffused		2.0	10m			700n			A	PD1257
70	LA6611	500u	20m		Diffused		1.6	10m			635n			A	PD1264
71	LA30001	500u	20m	90	Diffused		2.0	10m			700n			A	PD1247
72	LA30011	500u	20m	90	Diffused		1.6	10m			655n			A	PD1247
73	LA40001	500u	20m	90	Diffused		2.0	10m			700n			A	PD1247c
74	LA40011	500u	20m	90	Diffused		1.6	10m			655n			A	PD1247c
75	LA42001	500u	20m	90			2.0	10m			700n			A	PD1247d
76	LA42011	500u	20m	90	Diffused		1.6	10m			655n			A	PD1247d
77	LA50101	500u	20m	120	Diffused		2.0	10m			700n			A	PD1248
78	LA50111	500u	20m	120	Diffused		1.6	10m			655n			A	PD1248
79	LA57001	500u	20m	90	Diffused		2.0	10m			700n			A	PD1250
80	LA57011	500u	20m	90	Diffused		1.6	10m			655n			A	PD1250
81	LA57101	500u	20m	180	Diffused		2.0	10m			700n				PD1250
82	LA57111	500u	20m	180	Diffused		1.6	10m			655n				PD1250
83	LAH3100	500u	20m	80	Diffused		1.6	10m			655n			A	PD1279
84	LAH3105	500u	20m	80	Diffused		2.0	10m			700n			A	PD1279
85	MR31C	500u	20m	40	Water-clear		2.0	20m	100m	70m	660n	4A		A	PD257
86	MR31D	500u	20m	45	Diffused		2.0	20m	100m	70m	660n	4A		A	PD257
87	MR31T	500u	20m	40	Transparent		2.0	20m	100m	70m	660n	4A		A	PD257
88	MR31W	500u	20m	45			2.0	20m	100m	70m	660n	4A		A	PD257
89	MR61D	500u	20m				2.0	20m	105m	35m	660n	5A		B	None
90	MRB52C	500u	20m	20	Water-clear		2.0	20m	180m	70m	660n	4A		A	PD50n
91	MRB52D	500u	20m	40	Diffused		2.0	20m	180m	70m	660n	4A		A	PD50n
92	MRB52T	500u	20m	20	Transparent		2.0	20m	180m	70m	660n	4A		A	PD50n
93	MRB52W	500u	20m	40	Milk-white		2.0	20m	180m	70m	660n	4A		A	PD50n
94	MRB71D	500u	20m		Diffused		2.0	20m			660n				PD490b
95	MRC31D	500u	20m		Diffused		2.0	20m			660n				PD50ac
96	MS61D	500u	20m		Diffused		2.6	20m			700n				PD525
97	MS71D	500u	20m		Diffused		2.6	20m			700n				PD490a
98	NSL5020	500u	20m		Water-clear		2.0	20m	180m%	70m	655n	5A	RED L	A	PD89f
99	NSL5023	500u	20m		Diffused		2.0	20m	180m%	70m	655n	5A	RED L	A	PD89f
100	NSL5026	500u	20m		Diffused		2.0	20m	180m%	70m	655n	5A	REDL		PD89g
101	LST5053	500u	20m	80	Diffused	Cylindrical	3.0	20m	120m	35m	690n	5A		A	PD50r
102	LST5053R5	0.5m	20m	80		Cylindrical	5	20m	120m	35m	690n	5A	Built-In Resistor		PD50r
103	LST5053R10	0.5m	20m	80		Cylindrical	10	20m	120m	35m	690n	5A	Internal Resistor		PD50r
104	MR21D	500u	20m			Cylindrical	2.0	20m	105m	35m	660n	5A			PD333a
105	MS21D	500u	20m		Diffused	Cylindrical	2.6	20m			700n				PD333a
106	745-0019	500u	20m			DIP				150m	655n	28			PD1050
107	1N5765	500u	20m	64		Herm. Can	2.0	20m	85m	50m	630n	5A%	Cylindrical	B	PD84
108	HLMP0354	.5m	20m	70		Panel-mount	3.0	20m	120m	35m	695n	5A			PD369
109	HLMP0380	.5m	20m	70		Panel-mount	3.0	20m	120m	35m	695n	5A			PD369
110	HLMP0381	.5m	20m	70		Panel-mount	3.0	20m	120m	35m	695n	5A			PD369

SYMBOLS AND CODES EXPLAINED IN INTERPRETER

2. LED LAMPS - Red (Cont'd)

IN ORDER OF COLOR AND: (1) INTENSITY (2) IF TEST (3) BEAM ANGLE & (4) TYPE No.

LINE No.	4 TYPE NUMBER	1 LUMINOUS INTENSITY MIN (cd)	2 IF TEST (A)	3 BEAM ANGLE θ HI (°)	LENS TYPE	LAMP STYLE	VF MAX (V)	IF TEST (A)	PD RATED MAX (W)	IF RATED MAX (A)	PEAK WAVE-LENGTH λP (m)	TEMP. RANGE CODE - +	FEATURES	LEAD CODE	OUTLINE DRAWING
1	MI9500/519-01	.5m	20m	70	Diffused	Panel-mount	3.0	20m	120m	35m	635n	6A			PD369
2	MI9500/519-02	.5m	20m	70	Diffused	Panel-mount	3.0	20m	120m	35m	635n	6A			PD369
3	GL9HD10	500u	20m		Diffused	Rectangular	2.4	20m	70m	30m	635n	28			PD484
4	MR71D	500u	20m			Rectangular	2.0	20m	105m	35m	660n	5A		A	PD490
5	MRB61D	500u	20m		Diffused	Rectangular	2.0	20m			660n				PD262k
6	MS62D	500u	20m		Diffused	Rectangular	2.6	20m			700n				PD484b
7	TLR211	0.5m	20m		Transparent	Rectangular	2.8	20m	56m	20m	700n	27		♦	PD1103
8	ORL5053	0.5m	20m	80		Side-mount	3.0	20m	120m	35m	690n	5A	Cylindrical		PD507
9	AND123R	500u	20m	40	Water-clear	T-1	2.8	20m	60m	20m	700n	57		A	PD279c
10	GL3AR1	500u	20m		Diffused	T-1	1.9	20m	80m	40m	655n	27		A	PD279
11	GL3AR2	500u	20m		Diffused	T-1	1.9	20m	80m	40m	655n	27		A	PD279a
12	HLMP1000	.50m	20m	125	Diffused	T-1	2.0	20m	100m	50m	655n	5A		B	PD77m
13	HLMP1080	.50m	20m	125	Water-clear	T-1	2.0	20m	100m	50m	655n	5A		B	PD77m
14	MR32D	500u	20m		Diffused	T-1	2.0	20m			660n				PD77h
15	MR51C	500u	20m	60	Water-clear	T-1	2.0	20m	180m	70m	660n	4A		A	PD258
16	MR51D	500u	20m	65	Diffused	T-1	2.0	20m	180m	70m	660n	4A		A	PD258
17	MR51T	500u	20m	60	Transparent	T-1	2.0	20m	180m	70m	660n	4A		A	PD258
18	MR51W	500u	20m	65	Milk-white	T-1	2.0	20m	180m	70m	660n	4A		A	PD258
19	MRB81D	500u	20m		Diffused	T-1 1/2	2.0	20m			660n				PD982
20	CMD5021	500u	20m	90	Water-clear	T-1 3/4	2.0	20m	180m	100m	660n	5A		A	PD1143
21	MR52C	500u	20m	50	Water-clear	T-1 3/4	2.0	20m	180m	70m	660n	4A		A	PD258a
22	MR52D	500u	20m	65	Diffused	T-1 3/4	2.0	20m	180m	70m	660n	4A		A	PD258a
23	MR52T	500u	20m	50	Transparent	T-1 3/4	2.0	20m	180m	70m	660n	4A		A	PD258a
24	MR52W	500u	20m	65	Milk-white	T-1 3/4	2.0	20m	180m	70m	660n	4A		A	PD258a
25	MR81D	500u	20m			T-1 3/4	2.0	20m	105m	35m	660n	5A			PD562
26	MRB51C	500u	20m	20	Water-clear	T-1 3/4	2.0	20m	180m	70m	660n	4A		B	PD16j
27	MRB51D	500u	20m	40	Diffused	T-1 3/4	2.0	20m	180m	70m	660n	4A		B	PD16j
28	MRB51T	500u	20m	20	Transparent	T-1 3/4	2.0	20m	180m	70m	660n	4A		B	PD16j
29	MRB51W	500u	20m	40	Milk-white	T-1 3/4	2.0	20m	180m	70m	660n	4A		B	PD16j
30	MS81D	500u	20m		Diffused	T-1 3/4	2.6	20m			700n				PD562
31	NSL1012	500u	20m	40	Transparent	T-1 3/4	2.0	20m	100m	50m	655n	5A		A	PD16aa
32	TLBR5400	500u	20m	80	Diffused	T-1 3/4			200m	30m	630n	47	Blinking/Continuo		PD1000
33	TLBR5410	500u	20m	80	Diffused	T-1 3/4			200m	30m	630n	47	Blinking Freq 3Hz		PD1205
34	SR104DA	500u	30m	80	Diffused		1.9	30m	100m	50m	660n	38%		A	PD12y
35	OSL5	.55m†		100		Cylindrical	2.2	20m		50m	690n			A	PD58
36	SLP24B	600u†			Diffused		1.9	5.0m	70m	30m	700n	2A		A	PD1325
37	SLP102A	600u†			Water-clear		1.9	50m	35m	15m	700n	28		A	PD1330
38	SLP123B	600u†			Diffused		1.9	5.0m	70m	30m	700n	2A		A	PD1325a
39	RRL5621	600u		40	Diffused	Arch	6.0 §				650n	5A%	Internal Resistor	A	PD81 Ø
40	NSC209-5VR	600u		75	Diffused	Cylindrical	5.0 §	20m	100m	20m	697n	5A	5 Volt Operation	A	PD16ac
41	SLP114B	600u†			Diffused	T-1	1.9	50m	70m	30m	700n	2A		A	PD1061
42	555-2007	600u	3.0m	80	Diffused		5.0 §	3.0m			650n	5A		A	None
43	547-2007	0.6m	3.0m	80	Diffused	Rectangular	5.0 §	3.0m		4.0m	650n	5A		A	PD378
44	SLP145B	0.6m†	5.0m		Diffused		1.9	5.0m	70m	25m	700n	28		A	PD1293e
45	AL307	600u	10m	20			2.0	10m	40m	20m	660n	67			None
46	SR525D	600u	10m		Diffused		2.5	10m	60m	30m	695n	4A%	Max Vr 5V	A	PD1373a
47	LTL1212A	600u†	10m		Diffused	Cylindrical	2.8	20m			697n			A	PD1217
48	MV50152	600u	10m	70	Water-clear	T-1 3/4	2.0	10m	180m	100m	660n	5A		B	PD47a
49	NSC556R	600u	10m	30	Diffused	T-1 3/4	2.8	10m	100m	40m	697n	5A		A	PD18c
50	NSC3020	600u	10m	90	Diffused	T-1 3/4	2.8	10m	120m	35m	697n	5A			PD1083
51	NSC3021	600u	10m	60	Transparent	T-1 3/4	2.8	10m	120m	35m	697n	5A			PD1083
52	NSC4850R	600u	10m	80	Diffused	T-1 3/4		10m	115m	40m	655n	5A		A	PD18c
53	NSC5053R	600u	10m	80	Diffused	T-1 3/4	2.8	10m	100m	40m	697n	5A		B	PD284
54	NSC5059R	600u	10m	80	Diffused	T-1 3/4	2.8	10m	120m	35m	697n	5A		B	PD16ad
55	LN216RP	0.6m†	15m		Diffused		2.2	20m	70m	25m	700n	28		A	PD439a
56	LN248RPH	0.6m†	15m		Diffused		2.2	20m	70m	25m	700n	28		A	PD557a
57	MT130HLR	600u	15m	50	Transparent		2.8	20m	70m	20m	700n	27	Wire-Wrap Leads		PD258b
58	MT130SLR	600u	15m	50	Transparent		2.8	20m	100m	20m	700n	27			PD258c
59	LN219RP	600u	15m		Diffused	Arch	2.8	20m	70m	25m	700n	3A%		A	PD436
60	LN23SRP(H)	0.6m†	15m		Diffused	T-1	2.2	20m	70m	25m	700n	28		A	PD1061
61	LA3011D	600u	20m	45	Diffused		1.6	10m			655n			A	PD1247a
62	LA3011DH	600u	20m	45	Diffused		2.0	10m			700n			A	PD1247a
63	LA5011D	600u	20m	24	Diffused		1.6	10m			655n			A	PD1247E
64	LA5011DH	600u	20m	24	Diffused		2.0	10m			700n			A	PD1247E
65	LA5711D	600u	20m	40	Diffused		1.6	10m			655n				PD1251
66	LA5711DH	600u	20m	40	Diffused		2.0	10m			700n				PD1251
67	LA8911D	600u	20m		Diffused		1.6	10m			655n			A	PD1255
68	LA8911DH	600u	20m		Diffused		2.0	10m			700n			A	PD1255
69	LAH494	600u	20m		Diffused		1.7	10m			655n			A	PD1280
70	LAH497	600u	20m		Diffused		1.7	10m			655n			A	PD1281
71	LAH501	600u	20m		Diffused		1.7	10m			655n			A	PD1280a
72	LAH507	600u	20m		Diffused		1.7	10m			655n			A	PD1281a
73	MV5020	600u	20m	90	Transparent		2.0	20m	180m	100m	660n	5A		♦	PD89
74	MV5022	600u	20m	90			2.0	20m	180m	100m	660n	5A		♦	PD89
75	MV5055	600u†	20m	150	Diffused	Cylindrical	2.2	20m	125m	100m	660n	5B		A	PD16v
76	LDR461	600u	20m	100	Transparent	DIP	2.0	20m	85m	35m	660n	5A%	Miniature Size	♦	PD1047 Ø
77	CMD5074C	600u	20m	70	Diffused	T-1 1/4	2.0	20m	100m	50m	660n	5A		A	PD16k
78	CMD5022	600u	20m	90	Transparent	T-1 3/4	2.0	20m	180m	100m	660n	5A		A	PD1143
79	HEMT6000	625u	10m	16		Low-dome	1.8	10m	50m	20m	700n	5A	NearIR	A	PD180
80	TLLR4400	630u	2.0m	25	Diffused	T-1	2.4	2.0m	20m	7.0m	635n	5A%	Low Current		PD1190
81	TRLR3160	630u	2.0m	25	Water-clear	T-1	1.7	5.0m	100m	50m	635n	5A%	Ref. Voltage Type		PD1190
82	TLLR5400	630u	2.0m	25	Diffused	T-1 3/4	2.4	2.0m	20m	7.0m	635n	XA§		A	PD1025
83	TLAR5403	630u	10m	50	Diffused	Arch	2.0	20m	100m	50m	660n	5A%	Stackable		PD1189
84	TLPH5600	630u	10m	80	Diffused	Side-mount	3.0	10m	100m	30m	635n	5A%	Side View		PD1183
85	TLHR4600(A)	630u	10m	120	Diffused	T-1	3.0	10m	100m	30m	635n	5A%	High-efficiency		PD1190
86	TLUR4402	630u	10m	60	Water-clear	T-1	2.0	20m	100m	50m	660n	5A%	DC/Pulse Op		PD1190
87	LDR5702	630u	20m	100	Diffused	Cylindrical	2.0	20m	200m	60m	665n	5A%	Tr/Tf 5ns Typ	♦	PD932
88	LDR3702	630u	20m	100	Diffused	Rectangular	2.0	20m	200m	60m	665n	5A%	T-1 3/4 Size	♦	PD530
89	CMD5020	650u	20m	90	Water-clear	T-1 3/4	2.0	20m	180m	100m	660n	5A		A	PD1143
90	SLP139B	700u†	5.0m		Diffused		1.9	5.0m	70m	25m	700n	28		A	PD948a
91	SLP176B	700u†	5.0m		Diffused		1.9	5.0m	70m	25m	700n	28		A	PD1317
92	CQV80AL(A)	700u	10m	100	Diffused		2.2	10m	215	100m	650n	A §	Octagon	A	PD262m
93	CQV80L(A)	700u	10m	100	Diffused		3.0	10m	90m%	30m	630n	A §	Octagon	A	PD262m ☑
94	CQV80U(A)	700u	10m	100	Diffused		2.6	10m	90m%	30m	700n	A §	Octagon	A	PD262m
95	CQV80UL(A)	700u	10m	100	Diffused		2.6	10m	90m%	30m	700n	A §	Octagon	A	PD262m
96	CQW20A	700u	10m	110	Diffused		2.2	10m	150m	60m	650n	A §		A	PD1055 Ø
97	CQX10-1	700u	10m	50		Arch	2.2	10m		30m	630n			A	PD431
98	CQX10I	700u	10m	40		Arch	3.0	10m	120m	30m	630n	5A%		A	PD431
99	CQW60(A)	700u	10m	110	Diffused	Panel-mount	3.0	10m	90m%	30m	630n	A §		A	PD1082 ☑
100	CQW60A(A)	700u	10m	110	Diffused	Panel-mount	2.2	10m	215m	100m	650n	A §		A	PD1082 ☑
101	CQW60AL(A)	700u	10m	110	Diffused	Panel-mount	2.2	10m	215m	100m	650n	A §		A	PD1084 ☑
102	CQW60L(A)	700u	10m	110	Diffused	Panel-mount	3.0	10m	90m	30m	630n	A §		A	PD1084 ☑
103	CQW60U(A)	700u	10m	110	Diffused	Panel-mount	2.6	10m	90m%	30m	700n	A §		A	PD1082 ☑
104	CQW60UL(A)	700u	10m	110	Diffused	Panel-mount	2.6	10m	90m%	30m	700n	A §		A	PD1084 ☑
105	CQV70	700u	10m	100	Diffused	Rectangular	3.0	10m	90m%	30m	630n	A §		A	PD1085 ☑
106	CQV70A	700u	10m	100	Diffused	Rectangular	2.2	10m	215m	100m	650n	A §		A	PD1085 ☑
107	CQV70AL	700u	10m	100	Diffused	Rectangular	2.2	10m	215m	100m	650n	A §		A	PD1086 ☑
108	CQV70L	700u	10m	100	Diffused	Rectangular	3.0	10m	90m%	30m	630n	A §		A	PD1086 ☑
109	CQV70U(A)	700u	10m	100	Diffused	Rectangular	2.6	10m	90m%	30m	700n	A §		A	PD1085 ☑
110	CQV70UL	700u	10m	100	Diffused	Rectangular	2.6	10m	90m%	30m	700n	A §		A	PD1086 ☑

SYMBOLS AND CODES EXPLAINED IN INTERPRETER

2. LED LAMPS - Red (Cont'd)

IN ORDER OF COLOR AND: (1) INTENSITY (2) IF TEST (3) BEAM ANGLE & (4) TYPE No.

LINE No.	4 TYPE NUMBER	1 LUMINOUS INTENSITY MIN (cd)	2 IF TEST (A)	3 BEAM ANGLE θ HI (°)	LENS TYPE	LAMP STYLE	VF MAX (V)	IF TEST (A)	PD RATED MAX (W)	IF RATED MAX (A)	PEAK WAVE-LENGTH λP (m)	TEMP. RANGE CODE - +	FEATURES	LEAD CODE	OUTLINE DRAWING
1	CQW10A(A)	700u	10m	100	Diffused	Rectangular	2.2	10m	215m	100m	650n	A §	.	A	PD922 ☑
2	CQW10AL(A)	700u	10m	100	Diffused	Rectangular	2.2	10m	215m	100m	650n	A §		A	PD922 ☑
3	CQW10B(A)	700u	10m	100	Diffused	Rectangular	3.0	10m	90m%	30m	630n	A §		A	PD922 ☑
4	CQW10BL(A)	700u	10m	100	Diffused	Rectangular	3.0	10m	90m%	30m	630n	A §		A	PD922 ☑
5	CQW10U(A)	700u	10m	100	Diffused	Rectangular	2.6	10m	90m%	30m	700n	A §		A	PD922 ☑
6	CQW10UL(A)	700u	10m	100	Diffused	Rectangular	2.6	10m	90m%	30m	700n	A §		A	PD922 ☑
7	CQS51(A)	700u	10m	70	Diffused	T-1	2.6	10m	90m%	30m	700n	A §		A	PD232j Ø
8	CQS51L(A)	700u	10m	70	Diffused	T-1	2.6	10m	90m%	30m	700n	A §		A	PD232k Ø
9	SEL2110R	0.7m	10m	100	Diffused	T-1	2.5	10m	90m	30m	700n	3A		A	PD322
10	LTL204	700u	10m	32	Diffused	T-1 3/4	2.0	20m	80m	40m	655n	5A		♦	PD1211
11	LN247RP	0.7m†	15m		Diffused	T-3/4	2.2	20m	70m	25m	700n	28		A	PD914a
12	MSB71D	700u	20m		Diffused		2.6	20m			700n				PD490b
13	TLR250	700u	20m				2.8	25m	70m	25m	700n	37		A	PD493
14	MSB61D	700u	20m		Diffused	Rectangular	2.6	20m			700n				PD262k
15	CQS93E	700u	20m	60	Diffused	T-1	2.8	20m	70m%	25m	700n	A §		A	PD1171 Ø
16	CQS93L	700u	20m	50	Diffused	T-1	2.8	20m	70m%	30m	700n	A §		A	PD1172 Ø
17	CQY24B	700u	20m	70	Diffused	T-1	2.0	10m	100m%	50m	650n	A §		A	PD232j Ø
18	CQY24BL	700u	20m	70	Diffused	T-1	2.0	20m	100m%	50m	650n	A §		B	PD232k Ø
19	CQY54A	700u	20m	70	Diffused	T-1	2.0	20m	120m%	50m	650n	A §		A ♦	PD77 Ø
20	CQS82L	700u	20m	70	Diffused	T-1 1/2	2.0	20m	100m%	50m	650n	A §		A	PD15e Ø
21	MSB81D	700u	20m		Diffused	T-1 1/2	2.6	20m			700n				PD982
22	CMD5075C	700u	20m	90	Diffused	T-1 1/4	2.0	20m	100m	50m	660n	5A		A	PD16k
23	GL4AR2	700u	30m			Cylindrical	1.9	30m	100m	50m	655n	28		A	PD279b Ø
24	CQS54	700u	30m	70	Diffused	T-1 1/2	2.6	10m	90m%	30m	700n	A §		A	PD77 Ø
25	CMD5052	700u	80m	70	Transparent	T-1 3/4	2.2	20m	180m	100m	660n	5A		B	PD16ao
26	HLMP1100-101	800u		60	Diffused		7.5			20m	655n	48	Built-In Resistor		PD1057c
27	E1010	800u				Cylindrical	1.7	20m		50m	660n			A	PD16f
28	559-0102-001	800u				Panel-mount	14			20m	655n	5A	Built-In Resistor	♦	PD991
29	559-0102-003	800u				Panel-mount	14			20m	655n	5A	Built-In Resistor	♦	PD991a
30	559-0102-004	800u				Panel-mount	14			20m	655n	5A	Built-In Resistor	♦	PD991b
31	559-0102-005	800u				Panel-mount	14			20m	655n	5A	Built-In Resistor	♦	PD991c
32	559-0102-006	800u				Panel-mount	14			20m	655n	5A	Built-In Resistor	♦	PD991d
33	559-0102-007	800u				Panel-mount	14			20m	655n	5A	Built-In Resistor	♦	PD991e
34	559-0103-001	800u				Panel-mount	14			20m	655n	57	Built-In Resistor	♦	PD991
35	559-0103-003	800u				Panel-mount	14			20m	655n	57	Built-In Resistor	♦	PD991a
36	559-0103-004	800u				Panel-mount	14			20m	655n	57	Built-In Resistor	♦	PD991b
37	559-0103-005	800u				Panel-mount	14			20m	655n	57	Built-In Resistor	♦	PD991c
38	559-0103-006	800u				Panel-mount	14			20m	655n	57	Built-In Resistor	♦	PD991d
39	559-0103-007	800u				Panel-mount	14			20m	655n	57	Built-In Resistor	♦	PD991e
40	HLMP1120	.80m		60	Milk-white	T-1	7.5			20m	655n	48	Built-In Resistor	B	PD77m
41	SLP114A	800u†			Water-clear	T-1	1.9	50m	70m	30m	700n	2A		A	PD1061
42	HLMP3105	0.8m		75	Diffused	T-1 1/2	7.5		240m	20m	655n	48	Built-In Resistor	B	PD940
43	HLMP3112	0.8m		75	Diffused	T-1 1/2	15		240m	20m	655n	48	Built-In Resistor	B	PD940
44	HLMP1100	0.8m	1.5m	60	Diffused		7.5			20m	655n	48	Built-In Resistor		PD77e
45	HLMP6620-011	800u	4.0m	80	Diffused		6.0			5.0m	635n	48		A	PD1340a
46	HLMP6620-021	800u	4.0m	80	Diffused		6.0			5.0m	635n	48		A	PD1341a
47	MT860-5VR	800u	5.0m	50	Transparent		20	5.0m	70m	7.5m	700n	27	w/resistor for 5V	A	PD1162
48	SLP141B	0.8m†	5.0m		Diffused		1.9	5.0m	70m	25m	700n	28		A	PD1299
49	SLP171D	800u†	5.0m		Milk-white		1.9	5.0m	70m	25m	700n	28		♦	PD1307
50	LLL9A1	800u	5.0m	18		T-1	3.0	12m	150m	40m	690n	48		A	PD54
51	LLL9A3	800u	5.0m	18	Water-clear	T-1	2.6	5.0m	150m	40m	690n	48		A	PD54
52	MSL9A1	800u	5.0m	18	Water-clear	T-1	2.6	5.0m	150m	40m	690n	48		A	PD55
53	MSL9A3	800u	5.0m	18	Water-clear	T-1	2.6	5.0m	150m	40m	690n	48		A	PD55
54	555-3003	800u†	6.0m	70	Diffused		5.0 §	6.5m			650n	57		A	None
55	HLMP1800	800u	10m	140	Diffused		3.0	10m	135m	25m	635m	5A			PD1338
56	HLMP-L250	800u	10m	140	Diffused		3.0	10m	135m	30m	635n	5A		A	PD1339
57	TLR251	800u	10m				2.8	15m	120m	20m	700n	37		A	None
58	LTL6203L	800u†	10m		Diffused	Arch	2.0	20m			655n			A	PD1225
59	MV10B	800u†	10m	90	Water-clear	Cylindrical	2.0	50m	175m	70m	660n	5A		A	PD12c
60	SEL2110S	0.8m	10m	40	Water-clear	Cylindrical	2.5	10m	90m	30m	700n	3A		A	PD322
61	559-0101-006	800u	10m			Panel-mount	2.4	5.0m	70m	30m	700n	28		♦	PD991d
62	559-0101-007	800u	10m			Panel-mount	2.4	5.0m	70m	30m	700n	28		♦	PD991e
63	LTL13219A	800u†	10m		Diffused	Rectangular	2.8	20m			697n			A	PD1231
64	SPR2201	800u	10m		Water-clear	T-5/8	2.5	10m	75m	30m	700n	38		B	PD1110
65	SPR2221	800u	10m		Transparent	T-5/8	2.5	10m	75m	30m	700n	38		B	PD1110
66	MSL7	800u	12m	30	Diffused	T-1	3.0	12m	150m	40m	690n	48		A	PD55
67	OP004-30	800u†	15m		Diffused		2.1	15m	225m	80m					None
68	550-0505	0.8m	15m	10		Rectangular	5.0	20m	120m	20m	655n	5A		A	PD67a
69	550-0605	0.8m	15m	10		Rectangular	5.0	20m	120	20m	655n	57		A	PD67a
70	CMD5094C	800u	20m		Transparent		2.0	20m	140m	70m	660n	5A	/DC	A	PD92
71	GL9HD23	0.8m	20m				2.4	20m	70m	30m	635n	28			PD433
72	LA50201	800u	20m	15	Diffused		2.0	10m			700n			A	PD1248
73	LA50211	800u	20m	15	Diffused		1.6	10m			655n			A	PD1248
74	LA50301	800u	20m	30	Diffused		2.0	10m			700n			A	PD1248
75	LA50311	800u	20m	30	Diffused		1.6	10m			655n			A	PD1248
76	521-9190	800u	20m	100		Cylindrical	2.0	20m	120m	50m	665n	5A		A	PD50c
77	521-9240	0.8m	20m	90		Cylindrical	2.0	20m	120m	50m	665n	5A		A	PD52a
78	MV5056	800u†	20m	110	Diffused	Cylindrical	2.2	20m	125m	100m	660n	5B		A	PD16v
79	MV5094	800u	20m			Cylindrical	2.0	20m	140m	70m	660n	5A			PD92
80	550-0504	0.8m	20m	70	Diffused	Low-dome	5.0 §	20m	120m	20m	655n	5A		A	PD66a
81	550-0604	0.8m	20m	10		Low-dome	5.0	20m	120	20m	655n	5A		A	PD66a
82	559-4101-003	0.8m	20m	55	Diffused	Panel-mount	2.4	20m	70m	30m	700n	28			PD997a
83	559-4101-004	0.8m	20m	55	Diffused	Panel-mount	2.4	20m	70m	30m	700n	28			PD997b
84	559-4101-005	0.8m	20m	55	Diffused	Panel-mount	2.4	20m	70m	30m	700n	28			PD997c
85	559-4101-006	0.8m	20m	55	Diffused	Panel-mount	2.4	20m	70m	30m	700n	28		♦	PD997d
86	521-9200	0.8m	20m	90	Diffused	Rectangular	2.0	20m	120m	50m	665n	5A		A	PD319
87	550-0404	0.8m	20m	70	Diffused	Rectangular	2.0	20m	120m	50m	665n	5A		A	PD66
88	550-0405	0.8m	20m	70	Diffused	Rectangular	2.0	20m	120m	50m	665n	5A		A	PD67
89	559-4101-001	0.8m	20m	55	Diffused	Rectangular	2.4	20m	70m	30m	700n	28			PD997
90	559-4101-007	0.8m	20m	55	Diffused	Rectangular	2.4	20m	70m	30m	700n	28		♦	PD997e
91	LED3511	0.8m	20m	100	Diffused	Rectangular	2.0	20m	120m	30m	655n	5A			PD262g
92	LED3541R	0.8m	20m	100	Diffused	Rectangular	3.0	20m	120m	60m	635n	5A			PD262g
93	550-0406	0.8m	20m	70	Diffused	Side-mount	2.0	20m	120m	50m	665n	5A		A	PD68
94	550-0506	0.8m	20m	10		Side-mount	5.0	20m	120	20m	655n	5A		A	PD68a ☑
95	550-0606	0.8m	20m	10		Side-mount	5.0	20m	120	20m	655n	57		A	PD68a ☑
96	AND740R	800u†	20m		Transparent	T-1	2.1	20m	120m	20m	650n	48			PD257b
97	AND743R	800u†	20m		Water-clear	T-1	2.1	20m	120m	20m	650n	48			PD257b
98	AND744R	800u†	20m		Diffused	T-1	2.1	20m	120m	20m	650n	48			PD257b
99	AND746R	800u†	20m		Milk-white	T-1	2.1	20m	120m	20m	650n	48			PD257b
100	521-9183	800u	20m	150	Diffused	T-1 1/2	5.0	20m		20m	655n	5A		A	PD62
101	521-9184	800u	20m	150	Water-clear	T-1 1/2	5.0	20m		20m	655n	5A		A	PD62
102	HLMP3002	.80m	20m	90	Diffused	T-1 1/2	2.0	20m	100m	50m	655n	5A		B	PD940a
103	AND750R	800u†	20m		Transparent	T-1 3/4	2.1	20m	120m	20m	650n	48		A	PD16y
104	AND753R	800u†	20m		Water-clear	T-1 3/4	2.1	20m	120m	20m	650n	48		A	PD16y
105	AND754R	800u†	20m		Diffused	T-1 3/4	2.1	20m	120m	20m	650n	48		A	PD16y
106	CMD5053-1	800u	20m	80	Diffused	T-1 3/4	2.2	20m	180m	100m	660n	5A		A	PD16ao
107	521-9186	800u†	20m		Diffused	T-3/4	2.0	20m	80m	40m	650n	5A		B	PD36b
108	CMD5053	800u	80m	80	Diffused	T-1 3/4	2.2	20m	180m	100m	660n	5A		B	PD16ao
109	SEL1110R	900u	5.0m		Diffused	T-1 3/4	2.5	10m		30m	700n	3A		A	PD280e
110	SLF101C	900u†	10m		Transparent		2.0	10m	70m	30m	700m	26		♦	PD1331

SYMBOLS AND CODES EXPLAINED IN INTERPRETER

2. LED LAMPS - Red (Cont'd)

IN ORDER OF COLOR AND: (1) INTENSITY (2) IF TEST (3) BEAM ANGLE & (4) TYPE No.

LINE No.	4 TYPE NUMBER	1 LUMINOUS INTENSITY MIN (cd)	2 IF TEST (A)	3 BEAM ANGLE θ HI (°)	LENS TYPE	LAMP STYLE	VF MAX (V)	IF TEST (A)	PD RATED MAX (W)	IF RATED MAX (A)	PEAK WAVE-LENGTH λP (m)	TEMP. RANGE CODE - +	FEATURES	LEAD CODE	OUTLINE DRAWING
1	LA50401	900u	20m	24	Diffused		2.0	10m			700n			A	PD1247e
2	LA50411	900u	20m	24	Diffused		1.6	10m			655n			A	PD1247e
3	LA50501	900u	20m	15	Diffused		2.0	10m			700n			A	PD1247e
4	LA50511	900u	20m	15	Diffused		1.6	10m			655n			A	PD1247e
5	MV5024	900u	20m	60	Diffused		2.0	20m	180m	100m	660n	5A		♦	PD89a
6	CMD5024	900u	20m	60	Diffused	T-1 3/4	2.0	20m	180m	100m	660n	5A		A	PD1143
7	HLMP6000	-.5m	10m	45		T-3/4	2.0	10m	100m	50m	626n	5A		A	PD180a
8	HLMP6001	-.5m	10m	45		T-3/4	2.0	10m	100m	50m	626n	5A		A	PD180a
9	HLMP6020	-.5m	10m	45		T-3/4	2.0	10m	100m	50m	626n	5A		A	PD180a
10	HLMP6021	-.5m	10m	45		T-3/4	2.0	10m	100m	50m	626n	5A		A	PD180a
11	CQT10(A)	1.0m					2.1	10m		30m					PD922a
12	CQV60(A)	1.0m			Diffused		2.1	10m		30m	630n				None ⊠
13	HLMP5012	1.0m		75	Diffused		12			20m	655n	48	Built-In Resistor		PD68d
14	RRL5641	1.0m		40	Diffused	Arch	6.0 §				650n	5A%	Internal Resistor	A	PD81 Ø
15	SS9104	1.0m		90	Diffused	Panel-mount	5.0	13m	65m	13m	635n	57		A	PD69
16	HLMP5005	1.0m		33	Diffused	Side-mount	7.5			20m	655n	5A			PD68a
17	RRL1100	1.0m		70	Diffused	T-1	15 §		100m	15m	650n	5A%	Internal Resistor	B	PD16al
18	SP484-5569	1.0m	1.6m		Diffused	T-1 3/4	2.8	10m	100m	30m	697n	5A		A	PD16x
19	XC484	1.0m	1.6m	30	Diffused	T-1 3/4	2.8	10m	120m	35m	697n	5A		B	PD16ad
20	TLLR4401	1.0m	2.0m	25	Diffused	T-1	2.4	2.0m	20m	7.0m	635n	5A%	Low Current		PD1190
21	HLMP1700	1.0m	2m	50	Diffused	T-1 1/2	2.2	2m	24m	7m	635n	5A			PD1150
22	TLLR5401	1.0m	2.0m	25	Diffused	T-1 3/4	2.4	2.0m	20m	7.0m	635n	XA§		A	PD1205
23	GL3PR5	1.0m	5.0m				2.3	5.0m	23m	10m	695n	28			PD279
24	SLP135B	1.0m†	5.0m		Diffused		1.9	5.0m	70m	25m	700n	28		A	PD1293
25	SLP161B	1.0m†	5.0m		Diffused		1.9	5.0m	70m	25m	700n	28		A	PD1299a
26	SLP162B	1.0m†	5.0m		Diffused		1.9	5.0m	70m	25m	700n	28		A	PD1300b
27	SVD103	1.0m	5.0m		Water-clear	Low-dome	2.4	5.0m	20m	10m	700n	28		B	PD608
28	547-2006	1.0m†	8.0m	70	Diffused		14 §	10m			650n	57		A	PD378 ⊠
29	547-2008	1.0m†	8.0m	70	Diffused		14 §	10m			650n	57		A	PD378
30	555-2006	1.0m†	8.0m	70	Diffused		14 §	10m			650n	57		A	None
31	555-2008	1.0m†	8.0m	70	Diffused		14 §	10m			650n	57		A	None
32	555-3006	1.0m†	8.0m	70	Diffused		14 §	10m			650n	57		A	None
33	555-3008	1.0m†	8.0m	70	Diffused		14 §	10m			650n	57		A	None
34	CQV80UL2(A)	1.0m	10m	100	Diffused		2.6	10m	90m%	30m	700n	A §	Octagon	A	PD262m
35	HLMP1301-010	1.0m	10m	60	Diffused		3.0	10m	135m	30m	635n	5A			PD1057c
36	HLMP1301-101	1.0m	10m	60	Diffused		3.0	10m	135m	30m	635n	5A			PD1057d
37	HLMP6300-011	1.0m	10m	90	Diffused		3.0	10m	135m	30m	635n	5A		A	PD1340a
38	HLMP6300-021	1.0m	10m	90	Diffused		3.0	10m	135m	30m	635n	5A		A	PD1341a
39	LST5054-1R10	1.0m	10m	40			10	10m	120m	35m	690n	5A	Built-In Resistor		PD50r Ø
40	LST5054-1R5	1.0m	10m	40			5	10m	120m	35m	690n	5A	Built-In Resistor		PD50r Ø
41	SR505D	1.0m	10m	10	Diffused		2.4	10m	60m	30m	695n	4A%		A	PD285
42	SR505W	1.0m	10m	10	Milk-white		2.4	10m	60m	30m	695n	4A%		A	PD285
43	SR506C	1.0m	10m				2.6	10m	60m	30m	695n	4A%		A	PD1242
44	SR625D	1.0m	10m		Diffused		2.5	10m	100m	40m	630n	4A%	Max Vr 5V	A	PD1373a
45	TLUR2401	1.0m	10m	40	Diffused		2.0	10m	100m	50m	660n	5A%	Stackable	A	PD394a
46	CQX10II	1.0m	10m	40		Arch	3.0	10m	120m	30m	630n	XA§		A	PD431
47	TLAR5401	1.0m	10m	50	Diffused	Arch	2.0	20m	100m	50m	660n	5A%	Stackable		PD1189
48	561-0101-050	1.0m	10m	70	Diffused	Panel-mount	2.4	5m	70m	30m	700n	38			PD1017
49	561-0101-060	1.0m	10m	70	Diffused	Panel-mount	2.4	5m	70m	30m	700n	38			PD1017a
50	561-0101-070	1.0m	10m	70	Diffused	Panel-mount	2.4	5m	70m	30m	700n	38			PD1017b
51	561-0101-080	1.0m	10m	70	Diffused	Panel-mount	2.4	5m	70m	30m	700n	38			PD1017c
52	561-0101-090	1.0m	10m	70	Diffused	Panel-mount	2.4	5m	70m	30m	700n	38			PD1017d
53	561-0101-100	1.0m	10m	70	Diffused	Panel-mount	2.4	5m	70m	30m	700n	38			PD1017e
54	CQW60-2(A)	1.0m	10m	110	Diffused	Panel-mount	3.0	10m	90m%	30m	630n	A §		A	PD1082 ⊠
55	CQW60L2(A)	1.0m	10m	110	Diffused	Panel-mount	3.0	10m	90m%	30m	630n	A §		A	PD1084 ⊠
56	CQW60UL2(A)	1.0m	10m	110	Diffused	Panel-mount	2.6	10m	90m%	30m	700n	A §		A	PD1084 ⊠
57	CQV60A(A)	1.0m	10m	110		Rectangular	2.2	10m	250m	100m	650n	5A%			PD1082
58	CQV60AL(A)	1.0m	10m	110		Rectangular	2.2	10m	250m	100m	650n	5A%			PD1084
59	CQV60II(A)	1.0m	10m	110	Diffused	Rectangular	3.0	110m	90m%	30m	630n	5A			PD1082
60	CQV60L-II(A)	1.0m	10m	110	Diffused	Rectangular	3.0	110m	90m%	30m	630n	5A			PD1082
61	CQV70L2(A)	1.0m	10m	100	Diffused	Rectangular	3.0	10m	90m%	30m	630n	A §		A	PD1086 ⊠
62	CQV70U2	1.0m	10m	100	Diffused	Rectangular	2.6	10m	90m%	30m	700n	A §		A	PD1085 ⊠
63	CQV70UL2	1.0m	10m	100	Diffused	Rectangular	2.6	10m	90m%	30m	700n	A §		A	PD1086 ⊠
64	CQV80L2(A)	1.0m	10m	100	Diffused	Rectangular	3.0	10m	90m%	30m	630n	A §		A	PD262m ⊠
65	CQW10B2(A)	1.0m	10m	100	Diffused	Rectangular	3.0	10m	90m	30m	630n	A §		A	PD922 ⊠
66	CQW10BL2(A)	1.0m	10m	100	Diffused	Rectangular	3.0	10m	90m%	30m	630n	5A%		A	PD922 ⊠
67	CQW10III(A)	1.0m	10m	100	Diffused	Rectangular	3.0	10m	90m	30m	630n	5A%			PD922
68	CQW10L-II(A)	1.0m	10m	100	Diffused	Rectangular	3.0	10m	90m	30m	630n	5A%			PD922
69	CQW10U2(A)	1.0m	10m	100	Diffused	Rectangular	2.6	10m	90m%	30m	700n	A §		A	PD922 ⊠
70	CQW10UL2(A)	1.0m	10m	100	Diffused	Rectangular	2.6	10m	90m%	30m	700n	A §		A	PD922 ⊠
71	SR662D	1.0m	10m			Rectangular	2.5	10m	100m	40m	630n	4A		A	PD1033
72	SR663D(A)	1m	10m			Rectangular	2.5	10m	100m	40m	630n	4A		A	PD1033
73	TLSH2100	1.0m	10m	100	Diffused	Rectangular	3.0	20m	100m	50m	635n	5A%			PD489c
74	ORL5054-1	1.0m	10m	40		Side-mount	3.0	10m	120m	35m	690n	5A			PD507 Ø
75	HLMP1301	1.0m	10m		Diffused	T-1	3.0	10m	120m	20m	635n	5A		B	PD77h
76	HLMP1350	1.0m	10m	55		T-1	3.0	10m	135m	90m	635n	5A	RES		PD77
77	LTL202	1.0m†	10m		Transparent	T-1	2.0	20m			655n			A	PD1236
78	MV57640	1.0m	10m	90		T-1	3.0	10m	120m	30m	635n	5A		B	PD77m
79	TLUR4100	1.0m	10m	44	Water-clear	T-1	2.0	20m	100m	50m	660n	5A%	DC/Pulse Op		PD1190
80	TLUR4102	1.0m	10m	44	Water-clear	T-1	2.0	20m	100m	50m	660n	5A%	DC/Pulse Op		PD1190
81	TLUR4401	1.0m	10m	60	Diffused	T-1	2.0	20m	100m	50m	660n	5A%	DC/Pulse Op		PD1190
82	TLUR4403	1.0m	10m	60	Water-clear	T-1	2.0	20m	100m	50m	660n	5A%	DC/Pulse Op		PD1190
83	SR603D	1.0m	10m	35	Diffused	T-1 1/2	2.4	10m	100m	50m	630n	4A%		A	PD280c
84	SR603D(3)	1m	10m			T-1 1/2	2.4	10m		50m	630n	4A%		A	PD280j
85	SR603W	1.0m	10m	35	Milk-white	T-1 1/2	2.4	10m	100m	50m	630n	4A%		A	PD280c
86	SR603W(3)	1m	10m			T-1 1/2	2.4	10m		50m	630n	4A%		A	PD280j
87	HLMP6654	1.0m	10m	35	Diffused	T-1 3/4			120m	30m	635n	5A	HiEff		PD392
88	LST4054-1	1.0m	10m	65	Diffused	T-1 3/4	3.0	10m	120m	40m	690n	5A		A	PD16ag
89	LTL223	1.0m	10m	54	Diffused	T-1 3/4	2.8	20m	100m	30m	635n	5A		♦	PD1211
90	LTL4213	1.0m	10m	36	Diffused	T-1 3/4	2.8	20m	40m	15m	697n	5A		♦	PD1211
91	MV5054-1	1.0m	10m	24	Diffused	T-1 3/4	2.2	10m	125m	100m	660n	5A			PD90
92	NSC3010	1.0m	10m	90	Diffused	T-1 3/4	2.8	10m	120m	35m	635n	5A			PD1083
93	NSC3011	1.0m	10m	60	Transparent	T-1 3/4	2.8	10m	120m	35m	635n	5A			PD1083
94	NSC5057R	1.0m	10m	80	Diffused	T-1 3/4	2.8	10m	120m	35m	635n	5A		B	PD16ad
95	NSC5567R	1.0m	10m	30	Diffused	T-1 3/4	2.8	10m	120m	35m	635n	5A		A	PD16ad
96	TLHR5400	1.0m	10m	60	Diffused	T-1 3/4	3.0	20m	100m	30m	635n	5A%	High-efficiency	A	PD280k
97	TLHR6400	1.0m	10m	60	Diffused	T-1 3/4	3.0	20m	100m	30m	635n	5A%	High-efficiency	A	PD280k
98	TLUR5401	1.0m	10m	60	Diffused	T-1 3/4	2.0	20m	100m	50m	660n	5A%		A	PD280k
99	TLUR5403	1.0m	10m	60	Diffused	T-1 3/4	2.0	20m	100m	50m	660n	5A%		A	PD280k
100	TLUR6401(A)	1.0m	10m	60	Diffused	T-1 3/4	2.0	10m	100m	50m	660n	5A%		A	PD284e
101	HLMP6300	1m	10m	80		T-3/4	3.0	10m	120m	30m	635n	5A			PD180
102	HLMP6320	1.0m	10m	80		T-3/4	3.0	10m	120m	30m	635n	5A		A	PD180a
103	HLMP6600	1.0m	10m	90	Diffused	T-3/4	6.0 §	14m	375m		635n	57		A	PD180a
104	MT610HR	1.0m	15m	120	Transparent		2.8	20m	70m	25m	635n	27	Concave	A	PD1348
105	MT2230R	1.0m	15m	20	Transparent		2.8	20m	70m	25m	700n	27	Side View	A	PD915
106	TLR144	1.0m	15m	34	Diffused	Cylindrical	2.8	20m	70m	25m	700n	27		♦	PD1101a
107	TLS109A	1.0m	15m	180	Diffused	Cylindrical	2.8	20m	85m	30m	635n	27		♦	PD1102
108	CMD5777C	1.0m	20m	180	Diffused		3.0	20m	105m	35m	635m	5A		A	PD16aq
109	GL9HD6	1.0m	20m		Diffused		2.4	20m	70m	30m	635n	28			None
110	HLMP0300	1.0m	20m		Diffused		3.0	20m	120m	30m	635n	5A			PD423A

SYMBOLS AND CODES EXPLAINED IN INTERPRETER

2. LED LAMPS - Red (Cont'd)

IN ORDER OF COLOR AND: (1) INTENSITY (2) IF TEST (3) BEAM ANGLE & (4) TYPE No.

LINE No.	4 TYPE NUMBER	1 LUMINOUS INTENSITY MIN (cd)	2 IF TEST (A)	3 BEAM ANGLE θ HI (°)	LENS TYPE	LAMP STYLE	VF MAX (V)	IF TEST (A)	PD RATED MAX (W)	IF RATED MAX (A)	PEAK WAVE-LENGTH λP (m)	TEMP. RANGE CODE - +	FEATURES	LEAD CODE	OUTLINE DRAWING
1	L191DR	1.0m	20m	55	Diffused		2.0	20m	100m	50m	655n	38		A	PD50n
2	L381DR	1.0m	20m	55	Diffused		2.0	20m	100m	50m	655n	38		B	PD77q
3	L411DR	1.0m	20m	100	Diffused		3.0	20m	80m	25m	635n	5A		B	PD174
4	L511DR	1.0m	20m	100	Diffused		3.0	20m	135m	30m	635n	5A			PD1298
5	LA5011DO	1.0m	20m	24	Diffused		2.0	10m			635n			A	PD1247e
6	LED6280	1.0m	20m	50			2.0	20m	200m	60m	665n	5A			PD431a
7	LED6281	1.0m	20m	50			3.0	20m	200m	60m	690n	5A			PD431a
8	LST5053R	1.0m†	20m	80	Diffused		3.0 §	20m	120m	35m	690n	5A	Built-In Resistor		PD50r Ø
9	LST5054-1	1.0m	20m	40	Diffused		3.0	20m	120m	35m	690n	5A		A	PD50r Ø
10	LTL907PK	1.0m	20m	140	Water-clear		2.8	20m	45m	15m	697n	2A	Mini	J	PD1140
11	MO61DR	1.0m	20m		Diffused		3.0	20m			630n				PD525
12	MS31D	1.0m	20m		Diffused		2.6	20m			700n				PD257e
13	MSC31D	1.0m	20m		Diffused		2.6	20m			700n				PD50ac
14	MV5075C	1.0m†	20m	90			2.0	20m	100m	50m	660n	5A		A	PD16s Ø
15	NSL5974	1.0m	20m	45	Diffused		3.0	20m	120m	35m	697n	5A		B	PD284c Ø
16	CMD5054-1	1.0m	20m	24	Diffused	Cylindrical	2.2	20m	180m	100m	660n	5A		A	PD16ap
17	MS21DR	1.0m	20m		Diffused	Cylindrical	3.0	20m			630n				PD333a
18	1N6092	1.0m	20m	70		Herm. Can	3.0	20m	120m	35m	630n	5A		B	PD84 Ø
19	CMD269	1.0m	20m		Diffused	Rectangular	2.6	20m	120m	50m	634n	48			PD1151
20	CMD57124	1.0m	20m		Diffused	Rectangular	3.0	20m	105m	35m	635n	5A			PD319
21	GL9HD2	1.0m	20m		Diffused	Rectangular	2.4	20m	70m	30m	635n	28		A	PD334 Ø
22	GL9HD4	1.0m	20m			Rectangular	2.4	20m	70m	30m	635n	28		A	PD334a
23	GL9HD9	1.0m	20m		Diffused	Rectangular	2.4	20m	70m	30m	635n	28			PD490
24	LED6282	1.0m	20m	50		Rectangular	3.0	20m	200m	60m	635n	5A			PD530
25	MO71DR	1.0m	20m		Diffused	Rectangular	3.0	20m			630n				PD490
26	MV57124	1.0m	20m			Rectangular	3.0	20m	105m	35m	635n	5A		B	PD319 Ø
27	ORL700L	1.0m	20m	40		Side-mount	3.0	20m	120m	35m	690n	5A			PD507 Ø
28	GL9HD24	1.0m	20m			Square	2.4	20m	70m	30m	635n	28			None
29	CQS93-2	1.0m	20m	60	Diffused	T-1	2.8	20m	70m	25m	700n	A §		A	PD322 Ø
30	CQS93E2	1.0m	20m	60	Diffused	T-1	2.8	20m	70m	25m	700n	A §		A	PD1171 Ø
31	CQS93L2	1.0m	20m	50	Diffused	T-1	2.8	20m	70m%	30m	700n	A §		A	PD1172 Ø
32	CQY54A2	1.0m	20m	60	Diffused	T-1	2.0	20m	120m%	50m	650n	A §		A	PD77 Ø
33	HLMP1071	1.0m	20m	80	Water-clear	T-1	2.0	20m	100m	50m	655n	5A		B	PD77m
34	LDR1101	1.0m	20m	70	Diffused	T-1	2.0	20m	200m	100m	665n	5A%	Tr/Tf 5ns Typ	B	PD16al Ø
35	MS32D	1.0m	20m		Diffused	T-1	2.6	20m			700n				PD77h
36	NSL5986	1.0m	20m	60	Diffused	T-1	3.0	20m	120m	35m	697n	5A		B	PD77 Ø
37	SL5001	1m	20m	60		T-1	1.8	20m		35m	680n	4A%			PD77p
38	CMD57640	1.0m	20m	90	Diffused	T-1 1/2	3.0	20m	120m	30m	635n	5A		B	PD1150
39	CQS82L2	1.0m	20m	70	Diffused	T-1 1/2	2.0	20m	100m%	50m	650n	A §		A	PD15e Ø
40	HLMP3000	1.0m	20m	90	Diffused	T-1 1/2	2.0	20m	100m	50m	655n	5A		B	PD940
41	HLMP3050	1.0m	20m	24		T-1 1/2	2.0	20m	100m	50m	655n	5A		B	PD940a
42	CQY24B2	1.0m	20m	55	Diffused	T-1 3/4	2.0	20m	100m%	50m	650n	XA§		♦	PD56c
43	CQY24BL2(A)	1.0m	20m	60	Diffused	T-1 3/4	2.0	20m	100m%	50m	650n	5A%		A	PD56c
44	HLMP3200	1.0m	20m	60	Diffused	T-1 3/4	1.4	20m	100m	50m	655n	5A		B	PD392
45	LDR1201	1.0m	20m	70	Diffused	T-1 3/4	2.0	20m	200m	100m	665n	5A%	Tr/Tf 5ns Typ	♦	PD586a Ø
46	LDR5001	1.0m	20m	70	Diffused	T-1 3/4	2.0	20m	200m	100m	665n	5A%	Tr/Tf 5ns Typ	A	PD28p Ø
47	LDR5101	1.0m	20m	70	Diffused	T-1 3/4	2.0	20m	200m	100m	665n	5A%	Tr/Tf 5ns Typ	B	PD16ak Ø
48	MO81DR	1.0m	20m		Diffused	T-1 3/4	3.0	20m			630n				PD562
49	SL5004	1m	20m	50		T-1 3/4	1.8	20m		35m	680n	4A%			PD90c
50	MV54	1.0m†	20m		Diffused	T-3/4	2.0	20m	80m	40m	660n	5A		B	PD36c
51	SAR2201	1.0m	20m		Water-clear	T-5/8	2.0	20m	80m	40m	650n	38		A	PD1110
52	SAR2221	1.0m	20m		Transparent	T-5/8	2.0	20m	80m	40m	650n	38		A	PD1110
53	CQS54-2	1.0m	30m	70	Diffused	T-1 1/2	2.6	10m	90m%	30m	700n	A §		A	PD77 Ø
54	GL5AR1	1.0m	30m		Diffused	T-1 3/4	1.9	30m	100m	50m	655n	28		A	PD280 Ø
55	GL5AR2	1.0m	30m		Diffused	T-1 3/4	1.9	30m	100m	50m	655n	28		A	PD280a Ø
56	OSL1S	1.1m†		100			2.1	15m		50m	690n			A	PD58 Ø
57	OSL1	1.1m†		100		Low-dome	2.1	15m		50m	690n			A	PD59 Ø
58	GL5PR5	1.1m	5.0m			T-1 3/4	2.3	5.0m	23m	10m	695n	28		A	PD280a Ø
59	LTL4202	1.1m	10m	20	Transparent	T-1	2.0	20m	80m	40m	655n	5A		♦	PD1212
60	LTL4206	1.1m	10m	20	Water-clear	T-1	2.0	20m	80m	40m	655n	5A		♦	PD1212
61	LTL224	1.1m	10m	32	Diffused	T-1 3/4	2.8	20m	100m	30m	635n	5A		♦	PD1211
62	SLP136B	1.2m†			Diffused		1.9	5.0m	70m	25m	700n	28		A	PD1293a
63	HLMP4700	1.2m	2m	50	Diffused	T-1 1/2	2.2	2m	24m	7m	635n	5A			PD940a
64	SVD101	1.2m	5.0m		Diffused		2.4	5.0m	20m	10m	700n	27		B	PD16t Ø
65	SVD105	1.2m	5.0m			Herm. Can	2.4	5.0m	20m	10m	700n	28		B	TO-18 Ø
66	SVD106	1.2m	5.0m			Herm. Can	2.4	5.0m	20m	10m	700n	2A		B	TO-18 Ø
67	SVD102	1.2m	5.0m		Water-clear	T-1	2.4	5.0m	20m	10m	700n	28		B	PD118a Ø
68	SVD104	1.2m	5.0m		Water-clear	T-1 3/4	2.4	5.0m	20m	10m	700n	28		B	PD18a Ø
69	547-2003	1.2m	6.0m	80	Diffused		5.0 §	6.5m		8.0m	650n	5A		A	PD378 Ø
70	555-2003	1.2m	6.0m	80	Diffused		5.0 §	6.0m			650n	5A		A	None
71	MT620HR	1.2m	10m	90	Transparent		2.8	20m	70m	25m	635n	27	For Backlighting	A	PD1350
72	MT110R	1.2m	10m		Diffused	Rectangular	2.8	20m	70m	25m	700n	27		A	PD1352
73	MOB71DR	1.2m	20m		Diffused		3.0	20m			630n				PD490b
74	MO62DR	1.2m	20m		Diffused	Rectangular	3.0	20m			630n				PD484b
75	MOB61DR	1.2m	20m		Diffused	Rectangular	3.0	20m			630n				PD262k
76	MOB81DR	1.2m	20m		Diffused	T-1 1/2	3.0	20m			630n				PD982
77	LED1911	1.3m			Diffused	Square	2.0	20m	180m	50m	655n	28		A	PD908
78	LED1911G	1.3m			Diffused	Square	2.5	10m	180m	50m	700n	28		A	PD908
79	LED1912	1.3m			Diffused	Square	2.0	20m	180m	50m	655n	28		A	PD908
80	LED1912G	1.3m			Diffused	Square	2.5	10m	180m	50m	700n	28		A	PD908
81	LED1913	1.3m			Water-clear	Square	2.0	20m	180m	50m	655n	28		A	PD908
82	LED1913G	1.3m			Water-clear	Square	2.5	10m	180m	50m	700n	28		A	PD908
83	HLMP6600-011	1.3m	10m	80	Diffused		6.0			13m	635n	48		A	PD1340a
84	HLMP6600-021	1.3m	10m	80	Diffused		6.0			13m	635n	48		A	PD1341a
85	OPL5	1.3m	10m		Diffused		2.0	20m	180m	50m	655n	28			PD257g
86	OPL5-1	1.3m	10m				2.0	20m	180m	50m	655n	28			PD257g
87	OPL5-2	1.3m	10m		Diffused		2.0	20m	180m	50m	655n	28			PD257g
88	OPL5-3	1.3m	10m		Water-clear		2.0	20m	180m	50m	655n	28			PD257g
89	OPL7	1.3m	10m		Diffused		2.5	10m	180m	50m	700n	28			PD257g
90	OPL7-1	1.3m	10m				2.5	10m	180m	50m	700n	28			PD257g
91	OPL7-2	1.3m	10m		Diffused		2.5	10m	180m	50m	700n	28			PD257g
92	OPL7-3	1.3m	10m		Water-clear		2.5	10m	180m	50m	700n	28			PD257g
93	OPL47	1.3m	10m		Diffused		2.5	10m	180m	50m	635n	28			PD257g
94	OPL47-1	1.3m	10m				2.5	10m	180m	50m	635n	28			PD257g
95	SLF102B	1.3m†	10m		Diffused		2.0	10m	70m	30m	700m	27		♦	PD1332
96	LED1211	1.3m	10m		Diffused	Cylindrical	2.0	20m	180m	50m	655n	28		A	PD903
97	LED1211G	1.3m	10m		Diffused	Cylindrical	2.5	10m	180m	50m	700n	28		A	PD903
98	LED1212	1.3m	10m		Diffused	Cylindrical	2.0	20m	180m	50m	655n	28		A	PD903
99	LED1212G	1.3m	10m		Diffused	Cylindrical	2.5	10m	180m	50m	700n	28		A	PD903
100	LED1213	1.3m	10m		Water-clear	Cylindrical	2.0	20m	180m	50m	655n	28		A	PD903
101	LED1213G	1.3m	10m		Water-clear	Cylindrical	2.5	10m	180m	50m	700n	28		A	PD903
102	LED1214	1.3m	10m		Water-clear	Cylindrical	2.0	20m	180m	50m	655n	28		A	PD903
103	LED1214G	1.3m	10m		Water-clear	Cylindrical	2.5	10m	180m	50m	700n	28		A	PD903
104	LED1311	1.3m	10m		Diffused	Cylindrical	2.0	20m	180m	50m	655n	28		A	PD904
105	LED1311G	1.3m	10m		Diffused	Cylindrical	2.5	10m	180m	50m	700n	28		A	PD904
106	LED1312	1.3m	10m		Diffused	Cylindrical	2.0	20m	180m	50m	655n	28		A	PD904
107	LED1312G	1.3m	10m		Diffused	Cylindrical	2.5	10m	180m	50m	700n	28		A	PD904
108	LED1313	1.3m	10m		Water-clear	Cylindrical	2.0	20m	180m	50m	655n	28		A	PD904
109	LED1313G	1.3m	10m		Water-clear	Cylindrical	2.5	10m	180m	50m	700n	28		A	PD904
110	LED1314	1.3m	10m		Water-clear	Cylindrical	2.0	20m	180m	50m	655n	28		A	PD904

SYMBOLS AND CODES EXPLAINED IN INTERPRETER

2. LED LAMPS - Red (Cont'd)

IN ORDER OF COLOR AND: (1) INTENSITY (2) IF TEST (3) BEAM ANGLE & (4) TYPE No.

LINE No.	4 TYPE NUMBER	1 LUMINOUS INTENSITY MIN (cd)	2 IF TEST (A)	3 BEAM ANGLE θ HI (°)	LENS TYPE	LAMP STYLE	VF MAX (V)	IF TEST (A)	PD RATED MAX (W)	IF RATED MAX (A)	PEAK WAVE-LENGTH λP (m)	TEMP. RANGE CODE - +	FEATURES	LEAD CODE	OUTLINE DRAWING
1	LED1314G	1.3m	10m		Water-clear	Cylindrical	2.5	10m	180m	50m	700n	28		A	PD904
2	LED1012	1.3m	10m		Diffused	Rectangular	2.0	20m	180m	50m	655n	28		A	PD909a
3	LED1012G	1.3m	10m		Diffused	Rectangular	2.5	10m	180m	50m	700n	28		A	PD909a
4	LED1013	1.3m	10m		Water-clear	Rectangular	2.0	20m	180m	50m	655n	28		A	PD909a
5	LED1013G	1.3m	10m		Water-clear	Rectangular	2.5	10m	180m	50m	700n	28		A	PD909a
6	LED1014	1.3m	10m		Water-clear	Rectangular	2.0	20m	180m	50m	655n	28		A	PD909a
7	LED1014G	1.3m	10m		Water-clear	Rectangular	2.5	10m	180m	50m	700n	28		A	PD909a
8	LED1411	1.3m	10m		Diffused	Rectangular	2.0	20m	180m	50m	655n	28		A	PD905
9	LED1411G	1.3m	10m		Diffused	Rectangular	2.5	10m	180m	50m	700n	28		A	PD905
10	LED1412	1.3m	10m		Diffused	Rectangular	2.0	20m	180m	50m	655n	28		A	PD905
11	LED1412G	1.3m	10m		Diffused	Rectangular	2.5	10m	180m	50m	700n	28		A	PD905
12	LED1413	1.3m	10m		Water-clear	Rectangular	2.0	20m	180m	50m	655n	28		A	PD905
13	LED1413G	1.3m	10m		Water-clear	Rectangular	2.5	10m	180m	50m	700n	28		A	PD905
14	LED1414	1.3m	10m		Water-clear	Rectangular	2.0	20m	180m	50m	655n	28		A	PD905
15	LED1414G	1.3m	10m		Water-clear	Rectangular	2.5	10m	180m	50m	700n	28		A	PD905
16	LED1611	1.3m	10m		Diffused	Rectangular	2.0	20m	180m	50m	655n	28		A	PD907
17	LED1611G	1.3m	10m		Diffused	Rectangular	2.5	10m	180m	50m	700n	28		A	PD907
18	LED1612	1.3m	10m		Diffused	Rectangular	2.0	20m	180m	50m	655n	28		A	PD907
19	LED1612G	1.3m	10m		Diffused	Rectangular	2.5	10m	180m	50m	700n	28		A	PD907
20	LED1613	1.3m	10m		Water-clear	Rectangular	2.0	20m	180m	50m	655n	28		A	PD907
21	LED1613G	1.3m	10m		Water-clear	Rectangular	2.5	10m	180m	50m	700n	28		A	PD907
22	LED1614	1.3m	10m		Water-clear	Rectangular	2.0	20m	180m	50m	655n	28		A	PD907
23	LED1614G	1.3m	10m		Water-clear	Rectangular	2.5	10m	180m	50m	700n	28		A	PD907
24	LED2011	1.3m	10m		Diffused	Rectangular	2.0	20m	180m	50m	655n	28		A	PD909
25	LED2011G	1.3m	10m		Diffused	Rectangular	2.5	10m	180m	50m	700n	28		A	PD909
26	LED2012	1.3m	10m		Diffused	Rectangular	2.0	20m	180m	50m	655n	28		A	PD909
27	LED2012G	1.3m	10m		Diffused	Rectangular	2.5	10m	180m	50m	700n	28		A	PD909
28	LED2013	1.3m	10m		Water-clear	Rectangular	2.0	20m	180m	50m	655n	28		A	PD909
29	LED2013G	1.3m	10m		Water-clear	Rectangular	2.5	10m	180m	50m	700n	28		A	PD909
30	LED2014	1.3m	10m		Water-clear	Rectangular	2.0	20m	180m	50m	655n	28		A	PD909
31	LED2014G	1.3m	10m		Water-clear	Rectangular	2.5	10m	180m	50m	700n	28		A	PD909
32	LED2114	1.3m	10m		Water-clear	Rectangular	2.0	20m	180m	50m	655n	28		A	PD909b
33	LED2114G	1.3m	10m		Water-clear	Rectangular	2.5	10m	180m	50m	700n	28		A	PD909b
34	LED1914	1.3m	10m		Water-clear	Square	2.0	20m	180m	50m	655n	28		A	PD908
35	LED1914G	1.3m	10m		Water-clear	Square	2.5	10m	180m	50m	700n	28		A	PD908
36	LED1811	1.3m	10m		Diffused	T-1 3/4	2.0	20m	180m	50m	655n	28			PD16a
37	LED1811G	1.3m	10m		Diffused	T-1 3/4	2.5	10m	180m	50m	700n	28			PD16a
38	LED1812	1.3m	10m		Diffused	T-1 3/4	2.0	20m	180m	50m	655n	28			PD16a
39	LED1812G	1.3m	10m		Diffused	T-1 3/4	2.5	10m	180m	50m	700n	28			PD16a
40	LED1813	1.3m	10m		Water-clear	T-1 3/4	2.0	20m	180m	50m	655n	28			PD16a
41	LED1813G	1.3m	10m		Water-clear	T-1 3/4	2.5	10m	180m	50m	700n	28			PD16a
42	LED1814	1.3m	10m			T-1 3/4	2.0	20m	180m	50m	655n	28			PD16a
43	LED1814G	1.3m	10m			T-1 3/4	2.5	10m	180m	50m	700n	28			PD16a
44	LED1841R	1.3m	10m		Diffused	T-1 3/4	2.5	10m	180m	50m	635n	28			PD16a
45	LED1842R	1.3m	10m		Diffused	T-1 3/4	2.5	10m	180m	50m	635n	28			PD16a
46	LED1843R	1.3m	10m		Water-clear	T-1 3/4	2.5	10m	180m	50m	635n	28			PD16a
47	LED1844R	1.3m	10m			T-1 3/4	2.5	10m	180m	50m	635n	28			PD16a
48	SDL5L1	1.3m	10m			T-1 3/4	2.0	20m	180m	50m	655n	28			PD16af
49	SDL5L2	1.3m	10m		Diffused	T-1 3/4	2.0	20m	180m	50m	655n	28			PD16af
50	SDL5L3	1.3m	10m		Water-clear	T-1 3/4	2.0	20m	180m	50m	655n	28			PD16af
51	SDL5L	1.3m	10m		Diffused	T-1 3/4	2.0	20m	180m	50m	655n	28			PD16af
52	SDL7L1	1.3m	10m			T-1 3/4	2.5	10m	180m	50m	700n	28			PD16af
53	SDL7L2	1.3m	10m		Diffused	T-1 3/4	2.5	20m	180m	50m	700n	28			PD16af
54	SDL7L3	1.3m	10m		Water-clear	T-1 3/4	2.5	10m	180m	50m	700n	28			PD16af
55	SDL7L	1.3m	10m		Diffused	T-1 3/4	2.5	10m	180m	50m	700n	28			PD16af
56	SDL47L1	1.3m	10m			T-1 3/4	2.5	10m	180m	50m	635n	28			PD16af
57	SDL47L	1.3m	10m		Diffused	T-1 3/4	2.5	10m	180m	50m	635n	28			PD16af
58	LED1111	1.3m	10m		Diffused	Triangular	2.0	20m	180m	50m	655n	28		A	PD902
59	LED1111G	1.3m	10m		Diffused	Triangular	2.5	10m	180m	50m	700n	28		A	PD902
60	LED1112	1.3m	10m		Water-clear	Triangular	2.0	20m	180m	50m	655n	28		A	PD902
61	LED1112G	1.3m	10m		Water-clear	Triangular	2.5	10m	180m	50m	700n	28		A	PD902
62	LED1113	1.3m	10m		Water-clear	Triangular	2.0	20m	180m	50m	655n	28		B	PD902
63	LED1113G	1.3m	10m		Water-clear	Triangular	2.5	10m	180m	50m	700n	28		B	PD902
64	LED1114	1.3m	10m		Water-clear	Triangular	2.0	20m	180m	50m	655n	28		A	PD902
65	LED1114G	1.3m	10m		Water-clear	Triangular	2.5	10m	180m	50m	700n	28		A	PD902
66	LED1511G	1.3m	10m		Diffused	Triangular	2.5	10m	180m	50m	700n	28		A	PD906
67	LED1512	1.3m	10m		Diffused	Triangular	2.0	20m	180m	50m	655n	28		A	PD906
68	LED1512G	1.3m	10m		Diffused	Triangular	2.5	10m			700n			A	PD906
69	LED1513	1.3m	10m		Water-clear	Triangular	2.0	20m			655n			A	PD906
70	LED1513G	1.3m	10m		Water-clear	Triangular	2.5	10m			700n			A	PD906
71	LED1514	1.3m	10m		Water-clear	Triangular	2.0	20m	180m	50m	655n	28		A	PD906
72	LED1514G	1.3m	10m		Water-clear	Triangular	2.5	10m	180m	50m	700n	28		A	PD906
73	LN23SCP(H)	1.3m†	15m		Water-clear	T-1	2.2	20m	55m	25m	700n	28		A	PD1061
74	NSL5056	1.3m	20m	55	Diffused		2.0	20m	180m		655n	5A		A	PD28b Ø
75	MT2000UR	1.3m	20m	10	Water-clear	T-1 3/4	2.2	20m	55m	25m	660n	27	High Brightness	A	PD1202
76	MV50	1.4m†	20m	80	Diffused	T-3/4	2.0	20m	80m	40m	660n	5A		B	PD36c
77	HLMP1600-010	1.5m		40	Diffused		7.5			20m	635n	48	Built-In Resistor		PD1057c
78	HLMP1600-101	1.5m		60	Diffused		7.5			20m	635n	48	Built-In Resistor		PD1057d
79	HLMP5060	1.5m		65	Diffused		7.5			20m	635n	48	Built-In Resistor		PD68d
80	HLMP1600	1.5m		60	Diffused	T-1	7.5				635n	48	HiEff		PD77m
81	HLMP1601	1.5m		60	Diffused	T-1	15			20m	655n	48			PD77m
82	HLMP3600	1.5m		65	Diffused	T-1 1/2	7.5		75m	15m	635n	48	Built-In Resistor	B	PD940
83	HLMP3601	1.5m		65	Diffused	T-1 1/2	15			20m	635n	48	HiEFF		PD280c
84	NSL5920	1.5m		60	Diffused	T-1 3/4	3.0	20m	120m	35m	697n	5A		B	PD392 Ø
85	GL5PR6	1.5m	5.0m			T-1 3/4	2.3	5.0m	23m	10m	695n	28		A	PD280a Ø
86	SR605D	1.5m	10m	10	Diffused		2.4	10m	80m	40m	630n	4A%		A	PD285
87	SR605W	1.5m	10m	10	Milk-white		2.4	10m	80m	40m	630n	4A%		A	PD285
88	559-0101-001	1.5m	10m			Panel-mount	2.4	5.0m	70m	30m	700n	28		♦	PD991
89	559-0101-003	1.5m	10m			Panel-mount	2.4	5.0m	70m	30m	700n	28		♦	PD991a
90	559-0101-004	1.5m	10m		Diffused	Panel-mount	2.4	5.0m	70m	30m	700n	28		♦	PD991b
91	559-0101-005	1.5m	10m			Panel-mount	2.4	5.0m	70m	30m	700n	28		♦	PD991c
92	LTL201	1.5m†	10m		Diffused	T-1	2.0	20m			655n			A	PD1236
93	LTL205	1.5m†	10m		Milk-white	T-1	2.0	20m			655n			A	PD1236
94	LTL209	1.5m†	10m		Diffused	T-1	2.0	20m			655n			A	PD1210
95	MV57641	1.5m	10m	90		T-1	3.0	10m	120m	30m	635n	5A		B	PD77m
96	SL5011	1.5m	10m	60		T-1	2.8	10m		35m	645n	4A%			PD77p
97	SPR3431	1.5m	10m		Diffused	T-1	2.5	10m	75m	30m	700n	38		A	PD33
98	SR503D	1.5m	10m	35	Diffused	T-1 1/2	2.4	10m	60m	30m	695n	4A%		A	PD280c
99	SR503D(3)	1.5m	10m			T-1 1/2	2.5	10m		30m	695n	4A%		A	PD280j
100	SR503W	1.5m	10m	35	Milk-white	T-1 1/2	2.4	10m	60m	30m	695n	4A%		A	PD280c
101	SR503W(3)	1.5m	10m			T-1 1/2	2.5	10m		30m	695n	4A%		A	PD280j
102	SR513D(A)	1.5m	10m		Diffused	T-1 1/2	2.5	10m	60m	30m	695n	4A%		A	PD280c
103	SR513W(A)	1.5m	10m		Milk-white	T-1 1/2	2.5	10m	60m	30m	695n	4A%		A	PD280c
104	LN28RPH	1.5m†	15m		Diffused		2.2	20m	70m	25m	700n	28		A	PD1062
105	LN28RPL	1.5m†	15m		Diffused		2.2	20m	70m	25m	700n	28		A	PD1062
106	LN01201C	1.5m†	15m		Water-clear		2.2	20m	60m	20m	700n	28		A	PD1069
107	TLS108A	1.5m	15m	110	Transparent		2.8	20m	85m	30m	635n	27		♦	PD1102 Ø
108	TLS251	1.5m	15m				2.8	20m	140m	25m	635n	37		A	None
109	TLR114	1.5m†	15m		Jewel	T-1 3/4	2.8	20m	90m	20m	700n	27		A	PD215 Ø
110	TLR114A	1.5m†	15m		Diffused	T-1 3/4	2.8	20m	90m	20m	700n	27		A	PD422a Ø

SYMBOLS AND CODES EXPLAINED IN INTERPRETER

2. LED LAMPS - Red (Cont'd)

IN ORDER OF COLOR AND: (1) INTENSITY (2) IF TEST (3) BEAM ANGLE & (4) TYPE No.

LINE No.	4 TYPE NUMBER	1 LUMINOUS INTENSITY MIN (cd)	2 IF TEST (A)	3 BEAM ANGLE θ HI (°)	LENS TYPE	LAMP STYLE	VF MAX (V)	IF TEST (A)	PD RATED MAX (W)	IF RATED MAX (A)	PEAK WAVE-LENGTH λP (m)	TEMP. RANGE CODE - +	FEATURES	LEAD CODE	OUTLINE DRAWING
1	HLMP1201	1.5m	20m	120	Water-clear		2.0	20m	100m	50m	655n	5A		B	PD77g
2	LA5013D	1.5m	20m	15	Water-clear		1.6	10m			655n			A	PD1247e
3	LA5013DH	1.5m	20m	15	Water-clear		2.0	10m			700n			A	PD1247e
4	LA5513D	1.5m	20m	25	Water-clear		1.6	10m			655n			A	PD1249
5	LA5513DH	1.5m	20m	25	Water-clear		2.0	10m			700n			A	PD1249
6	MT1500UR	1.5m†	20m	10	Water-clear		2.4	20m	55m	25m	660n	27	High Brightness	A	PD258b
7	BR3665S	1.5m	20m		Transparent	Cylindrical	2.0	20m	100m	50m	660n	38	Lens:Pale Red		PD1395
8	VR3665S	1.5m	20m		Transparent	Cylindrical	2.5	20m	75m	30m	630n	38	Lens:Pale Red		PD1395
9	SBR7851REC(A)	1.5m	20m		Diffused	Rectangular	2.0	20m	100m	50m	660n	38			PD1379 ☑
10	SR641D	1.5m	20m		Diffused	Square	2.5	20m	100m	40m	630n	4A%	Max Vr 5V	A	PD1374
11	AND740H	1.5m†	20m		Transparent	T-1	3.0	20m	120m	20m	630n	48			PD257b Ø
12	AND743H	1.5m†	20m		Water-clear	T-1	3.0	20m	120m	20m	630n	48			PD257b Ø
13	AND744H	1.5m†	20m		Diffused	T-1	3.0	20m	120m	20m	630n	48			PD257b Ø
14	AND746H	1.5m†	20m		Milk-white	T-1	3.0	20m	120m	20m	630n	48			PD257b Ø
15	AND748H	1.5m†	20m		Diffused	T-1	3.0	20m	120m	20m	630n	48			PD257b Ø
16	HLMP1002	1.5m	20m	125	Diffused	T-1	2.0	20m	100m	50m	655n	5A		B	PD77m
17	MS51D	1.5m	20m	28	Diffused	T-1	3.0	20m	105m	30m	700n	5A		A	PD258
18	NSL5786	1.5m	20m	60	Diffused	T-1	3.0	20m	120m	35m	635n	5A		B	PD77 Ø
19	SAR3431	1.5m	20m		Diffused	T-1	2.0	20m	100m	50m	650n	38		A	PD33
20	CMD57641	1.5m	20m	90	Diffused	T-1 1/2	3.0	20m	120m	30m	635n	5A		B	PD1150
21	CMD5774C	1.5m	20m	90	Diffused	T-1 1/4	3.0	20m	105m	35m	635n	5A		A	PD16k
22	AND750H	1.5m†	20m		Transparent	T-1 3/4	3.0	20m	120m	20m	630n	48		A	PD16y Ø
23	AND753H	1.5m†	20m		Water-clear	T-1 3/4	3.0	20m	120m	20m	630n	48		A	PD16y Ø
24	AND754H	1.5m†	20m		Diffused	T-1 3/4	3.0	20m	120m	20m	630n	48		A	PD16y Ø
25	SAR5531	1.5m	20m		Diffused	T-1 3/4	2.0	20m	100m	30m	650n	38		A	PD28b
26	SAR5633	1.5m	20m		Diffused	T-1 3/4	2.0	20m	100m	50m	650n	38		A	PD47b
27	SR106C	1.5m†	20m		Water-clear	T-3/4	2.0	20m	80m	40m	660n	X8§		A	PD256 Ø
28	SR106D	1.5m†	20m		Diffused	T-3/4	2.0	20m	80m	40m	660n	X8§		A	PD256 Ø
29	521-9264	1.5m	25m	100		Rectangular	3.0	25m	120m	20m	635n	5A	RECT		PD262
30	CQW51	1.6m			Diffused	T-1	2.1	10m	60m	20m	630n	XA§			PD77
31	5053R10	1.6m†		80		T-1 3/4	10	20m		35m	690n		Built-In Resistor		PD379
32	MV5053	1.6m†	2.0m	80	Diffused	T-1 3/4	2.2	20m	125m	100m	670n	5A		A	PD16a Ø
33	CQV80AL3(A)	1.6m	10m	100	Diffused		2.2	10m	215m	100m	650n	A §		A	PD262m
34	CQV80UL3(A)	1.6m	10m	100	Diffused		2.6	10m	90m%	30m	700n	A §	Octagon	A	PD262m
35	TLHR8400	1.6m	10m	35	Diffused		3.0	20m	100m	30m	635n	XA§	High-efficiency	B	None
36	CQX10III	1.6m	10m	40		Arch	3.0	10m	120m	30m	630n	5A%		A	PD431
37	TLYR5200	1.6m	10m		Transparent	Cylindrical	3.0	20m	100m	30m	635n	XA§	For Fiber Optics		PD1385
38	CQW60-3(A)	1.6m	10m	110	Diffused	Panel-mount	3.0	10m	90m%	30m	630n	A §		A	PD1082 ☑
39	CQW60A3(A)	1.6m	10m	110	Diffused	Panel-mount	2.2	10m	215m	100m	650n	A §		A	PD1082 ☑
40	CQW60AL3(A)	1.6m	10m	110	Diffused	Panel-mount	2.2	10m	215m	100m	650n	A §		A	PD1084 ☑
41	CQW60L3(A)	1.6m	10m	110	Diffused	Panel-mount	3.0	10m	90m%	30m	630n	A §		A	PD1084 ☑
42	CQW60U3(A)	1.6m	10m	110	Diffused	Panel-mount	2.6	10m	90m%	30m	700n	A §		A	PD1082 ☑
43	CQW60UL3(A)	1.6m	10m	110	Diffused	Panel-mount	2.6	10m	90m%	30m	700n	A §		A	PD1084 ☑
44	CQV60III(A)	1.6m	10m	110	Diffused	Rectangular	3.0	110m	90m%	30m	630n	5A			PD1082
45	CQV60L-III(A)	1.6m	10m	110	Diffused	Rectangular	3.0	110m	90m%	30m	630n	5A			PD1082
46	CQV70-3(A)	1.6m	10m	100	Diffused	Rectangular	3.0	10m	90m%	30m	630n	A §		A	PD1085 ☑
47	CQV70A3(A)	1.6m	10m	100	Diffused	Rectangular	2.2	10m	215m	100m	650n	A §		A	PD1085 ☑
48	CQV70AL3(A)	1.6m	10m	100	Diffused	Rectangular	2.2	10m	215m	100m	650n	A §		A	PD1086 ☑
49	CQV70L3(A)	1.6m	10m	100	Diffused	Rectangular	3.0	10m	90m%	30m	630n	A §		A	PD1086 ☑
50	CQV70U3	1.6m	10m	100	Diffused	Rectangular	2.6	10m	90m%	30m	700n	A §		A	PD1085 ☑
51	CQV70UL3	1.6m	10m	100	Diffused	Rectangular	2.6	10m	90m%	30m	700n	A §		A	PD1086 ☑
52	CQV80L3(A)	1.6m	10m	100	Diffused	Rectangular	3.0	10m	90m%	30m	630n	A §		A	PD262m ☑
53	CQW10A3(A)	1.6m	10m	100	Diffused	Rectangular	2.2	10m	215m	100m	650n	A §		A	PD922 ☑
54	CQW10B3(A)	1.6m	10m	100	Diffused	Rectangular	3.0	10m	90m	30m	630n	A §		A	PD922 ☑
55	CQW10BL3(A)	1.6m	10m	100	Diffused	Rectangular	3.0	10m	90m%	30m	630n	A §		A	PD922 ☑
56	CQW10III(A)	1.6m	10m	100	Diffused	Rectangular	3.0	10m	90m	30m	630n	5A%			PD922
57	CQW10L-III(A)	1.6m	10m	100	Diffused	Rectangular	3.0	10m	90m	30m	630n	5A%			PD922
58	CQW10U3(A)	1.6m	10m	100	Diffused	Rectangular	2.6	10m	90m%	30m	700n	A §		A	PD922 ☑
59	CQW10UL3(A)	1.6m	10m	100	Diffused	Rectangular	2.6	10m	90m%	30m	700n	A §		A	PD922 ☑
60	TLSH2101	1.6m	10m	100	Diffused	Rectangular	3.0	20m	100m	50m	635n	5A%			PD489c
61	CQS51-3(A)	1.6m	10m	70	Diffused	T-1	2.6	10m	90m%	30m	700n	A §		A	PD232j Ø
62	CQS51L3(A)	1.6m	10m	70	Diffused	T-1	2.6	10m	90m%	30m	700n	A §		A	PD232k Ø
63	CQX51	1.6m	10m	70	Diffused	T-1		10m	90m%	30m	630n	A §		A	PD232j Ø
64	CQY54A3	1.6m	10m	70	Diffused	T-1	2.0	20m	120m%	50m	650n	A §		A	PD77
65	TLUR4101	1.6m	10m	44	Water-clear	T-1	2.0	20m	100m	50m	660n	5A%	DC/Pulse Op		PD1190
66	TLUR4103	1.6m	10m	44	Water-clear	T-1	2.0	20m	100m	50m	660n	5A%	DC/Pulse Op		PD1190
67	CQS82AL	1.6m	10m	70	Diffused	T-1 1/2	2.2	10m	215m	100m	650n	A §		A	PD15e Ø
68	TLUR5100	1.6m	10m	24	Water-clear	T-1 3/4	2.0	20m	100m	50m	660n	5A%		A	PD280k
69	TLUR5102	1.6m	10m	24	Water-clear	T-1 3/4	2.0	20m	100m	50m	660n	5A%		A	PD280k
70	LLL9-1	1.6m	12m	18		T-1	3.0	12m	150m	40m	690n	48		A	PD54 Ø
71	LLL9-3	1.6m	12m	18		T-1	3.0	12m	150m	40m	690n	48		A	PD54 Ø
72	MSL9-1	1.6m	12m	18	Water-clear	T-1	3.0	12m	150m	40m	690n	48		A	PD55 Ø
73	MSL9-3	1.6m	12m	18	Water-clear	T-1	3.0	12m	150m	40m	690n	48		A	PD55 Ø
74	SLP979B50	1.6m†	20m		Diffused		2.1	20m	70m	25m	630n	28		A	PD1311
75	CQS93-3	1.6m	20m	60	Diffused	T-1	2.8	20m	70m	25m	700n	A §		A	PD322 Ø
76	CQS93E3	1.6m	20m	60	Diffused	T-1	2.8	20m	70m	25m	700n	A §		A	PD1171 Ø
77	CQS93L3	1.6m	20m	50	Diffused	T-1	2.8	20m	70m%	30m	700n	A §		A	PD1172 Ø
78	CQS82L3	1.6m	20m	70	Diffused	T-1 1/2	2.0	20m	100m%	50m	650n	A §		A	PD15e Ø
79	MV5021	1.6m†	20m	90	Diffused	T-1 1/2	2.0	20m	180m	100m	660n	5A		A	PD89 Ø
80	CMD5053-2	1.6m	20m	80	Diffused	T-1 3/4	2.2	20m	180m	100m	660n	5A		A	PD16ao Ø
81	CQY24B3	1.6m	20m	55	Diffused	T-1 3/4	2.0	20m	100m%	50m	650n	XA§		♦	PD56c
82	CQY24BL3(A)	1.6m	20m	60	Diffused	T-1 3/4	2.0	20m	100m%	50m	650n	5A%		A	PD56c
83	HP5082-4882	1.6m	20m	70	Diffused	T-1 3/4	2.0	20m	100m	50m	655n	5A		B	PD13 Ø
84	MV5051	1.6m†	20m	72	Diffused	T-1 3/4	2.2	20m	125m	100m	670n	5A		A	PD16a Ø
85	CQS54-3	1.6m	30m	70	Diffused	T-1 1/2	2.6	10m	90m%	30m	700n	A §		A	PD77 Ø
86	LTL10223W	1.7m	10m	60	Diffused		2.8	20m	100m	30m	635n	5A		A	PD1214
87	LTL6233LN	1.7m	10m	70		Arch	2.8	20m	100m	30m	565n	5A	Flat	A	PD1225
88	LTL211	1.7m†	10m		Diffused	T-1	2.8	20m			697n			A	PD1236
89	LTL4204	1.7m	10m	16	Transparent	T-1 3/4	2.0	20m	80m	40m	655n	5A		♦	PD1211
90	MV5077C	1.7m†	20m	110			2.0	20m	100m	50m	660n	5A		A	PD16u Ø
91	SEL1110S	1.8m	5.0m		Water-clear	T-1 3/4	2.5	10m		30m	700n	3A		A	PD280e
92	SEL1110W	1.8m	5m		Milk-white	T-1 3/4	2.5	10m		30m	700n	3A		A	PD280e
93	MT263HR	1.8m	15m	130	Transparent		2.8	20m	70m	25m	635n	27	For Backlighting	A	PD1349
94	TLR116	1.8m†	15m		Jewel	T-1 3/4	2.8	20m	90m	20m	700n	27		A	PD215 Ø
95	TLR116A	1.8m†	15m		Milk-white	T-1 3/4	2.8	20m	90m	20m	700n	27		A	PD422a Ø
96	OPL1209A	1.8m†	20m		Diffused		2.2	20m	150m	50m				A	PD15c Ø
97	521-9181	2.0m†			Diffused		1.7	20m		50m	665n			A	PD208 Ø
98	521-9222	2.0m†					5.0	15m		20m	655n			A	PD208a Ø
99	521-9223	2.0m†					1.7	20m		50m	665n			A	PD208 Ø
100	LLL7	2.0m†		30	Diffused	T-1	2.1	12m		40m	690n				PD54 Ø
101	OPL409	2.0m†		150	Diffused	T-1	2.5	20m		50m	635n				PD16ae
102	5054-1R5	2.0m†		40		T-1 3/4	5.0	10m		35m	690n		Built-In Resistor		PD379
103	5054-1R10	2.0m†		40		T-1 3/4	10	10m		35m	690n		Built-In Resistor		PD379
104	RRL3105	2.0m		70	Diffused	T-1 3/4	15 §		100m	15m	655n	5A%	Internal Resistor	B	PD16am Ø
105	RRL3112	2.0m		70	Diffused	T-1 3/4	15 §		100m	15m	655n	5A%	Internal Resistor	B	PD16am Ø
106	LST5054R	2.0m†	10m	40	Diffused		3.0 §	20m	120m	35m	690n	5A	Built-In Resistor		PD50r Ø
107	NSC309R2	2.0m	10m	75	Diffused		2.8	10m	120m	35m	635n	5A		A	PD16aj
108	NSC554R	2.0m	10m	24	Transparent		2.8	10m	100m	40m	697n	5A		A	PD18C Ø
109	SR505C	2.0m	10m	7.0	Water-clear		2.4	10m	60m	30m	695n	4A%		A	PD285
110	4000-2-001	2.0m	10m			Panel-mount	2.2	10m		20m		5A	Built-In Resistor		PD1039

SYMBOLS AND CODES EXPLAINED IN INTERPRETER

2. LED LAMPS - Red (Cont'd)

IN ORDER OF COLOR AND: (1) INTENSITY (2) IF TEST (3) BEAM ANGLE & (4) TYPE No.

LINE No.	4 TYPE NUMBER	1 LUMINOUS INTENSITY MIN (cd)	2 IF TEST (A)	3 BEAM ANGLE θ HI (°)	LENS TYPE	LAMP STYLE	VF MAX (V)	IF TEST (A)	PD RATED MAX (W)	IF RATED MAX (A)	PEAK WAVE-LENGTH λP (m)	TEMP. RANGE CODE - +	FEATURES	LEAD CODE	OUTLINE DRAWING
1	4000-2-002	2.0m	10m			Panel-mount	2.2	10m		10m		5A	Built-In Resistor		PD1039
2	4000-2-003	2.0m	10m			Panel-mount	2.2	10m		10m		5A	Built-In Resistor		PD1039
3	4000-2-004	2.0m	10m			Panel-mount	2.2	10m		10m		5A	Built-In Resistor		PD1039
4	4000-2-005	2.0m	10m			Panel-mount	2.2	10m		10m		5A	Built-In Resistor		PD1039
5	4000-2-006	2.0m	10m			Panel-mount	2.2	10m		10m		5A	Built-In Resistor		PD1039
6	4000-2-007	2.0m	10m			Panel-mount	2.2	10m		50u		5A	Built-In Resistor		PD1039
7	4000-5-004	2.0m	10m		Water-clear	Panel-mount	2.2	10m		10m		5A	Built-In Resistor		PD1039
8	4000-5-005	2.0m	10m		Water-clear	Panel-mount	2.2	10m		10m		5A	Built-In Resistor		PD1039
9	4000-5-006	2.0m	10m		Water-clear	Panel-mount	2.2	10m		10m		5A	Built-In Resistor		PD1039
10	4000-5-007	2.0m	10m		Water-clear	Panel-mount	2.2	10m		50m		5A	Built-In Resistor		PD1039
11	CQN10(A)	2m	10m	110		Rectangular	2.2	10m	360m	60m	650n	58%			PD1081
12	HLMP1302	2.0m	10m		Diffused	T-1	3.0	10m	120m	20m	635n	5A		B	PD77h
13	MV57620	2.0m†	10m	60		T-1	3.0	10m	120m	1.0	635n	5A			PD77m
14	HLMP4610	2m	10m	32		T-1 1/2	3.0	10m	135m	30m	635n	5A			PD940
15	HLMP3300	2m	10m	90		T-1 3/4	3.0	10m	135m	30m	635n	5A			PD16a
16	HLMP3350	2.0m	10m	50	Diffused	T-1 3/4	3.0	10m	135m	25m	635n	5A		B	PD392
17	HLMP4600	2.0m	10m	32	Diffused	T-1 3/4	3.0	10m	135m	30m	635n	5A		B	PD50u
18	LTL5114	2.0m	10m	40	Transparent	T-1 3/4	2.8	20m	40m	15m	697n	5A		♦	PD1211
19	MV5054-2	2.0m	10m	24	Diffused	T-1 3/4	2.2	10m	125m	100m	660n	5A		A	PD90 Ø
20	MV5054A1	2.0m	10m	40		T-1 3/4	2.2	10m	180m	100m		5A			PD16a
21	MV5054A2	2.0m	10m	40		T-1 3/4	2.2	10m	180m	100m		5A			PD16a
22	MV5054A3	2.0m	10m	40		T-1 3/4	2.2	10m	180m	100m		5A			PD16a
23	NSC526R2	2.0m	10m	70	Diffused	T-1 3/4	2.8	10m	100m	40m	697n	5A		A	PD18d Ø
24	NSC556R2	2.0m	10m	30	Diffused	T-1 3/4	2.8	10m	100m	40m	697n	5A		A	PD18c Ø
25	NSC5547R	2.0m	10m	24	Transparent	T-1 3/4	2.8	10m	120m	35m	635n	5A		A	PD16ad Ø
26	NSC5567R2	2.0m	10m	30	Diffused	T-1 3/4	2.8	10m	120m	35m	635n	5A		A	PD16ad Ø
27	NSC5569R2	2.0m	10m	30	Diffused	T-1 3/4	2.8	10m	120m	35m	635n	5A		B	PD16ad Ø
28	RL55	2.0m	10m	50	Diffused	T-3/4	2.0	20m	80m	40m	660n	5A%	Axial;Miniature	B	PD36a
29	LN238RPH	2.0m†	15m		Diffused		2.1	20m	70m	25m	700n	28		A	PD559
30	OP004-60	2.0m†	15m		Diffused		2.1	15m	225m	80m					None
31	ORL6	2.0m†	15m		Diffused		2.1	15m	225m	80m					None
32	549-0104	2.0m†	15m	120	Diffused	T-1 3/4	5.0 §	16m		20m	655n	4A		A	PD379 Ø
33	547-2004	2.0m†	16m	70	Diffused		5.0 §	16m		20m	650n	5A		A	PD378 ☑
34	555-2004	2.0m†	16m	70	Diffused		5.0 §	16m			650n	5A		A	None
35	555-3004	2.0m†	16m	70	Diffused		5.0 §	16m			650n	57		A	None
36	521-9165	2.0m†	20m	100	Diffused		2.0	20m	120m	50m	665n	5A		A	PD50c ☑
37	521-9166	2.0m†	20m	100	Diffused		2.0	20m	120m	50m	665n	5A		A	PD50c ☑
38	521-9180	2.0m†	20m	100	Diffused		2.0	20m	120m	50m	665n	5A		A	PD15d Ø
39	547-2002	2.0m	20m	70	Diffused		3.6 §	20m	135m		650n	57		A	PD378 ☑
40	555-2002	2.0m	20m	70	Diffused		3.6 §	20m	135m		650n	57		A	None
41	555-3001	2.0m	20m	70	Diffused		1.7 §	20m	80m	40m	650n	57		A	None
42	555-3002	2.0m	20m	70	Diffused		3.6 §	20m	135m		650n	57		A	None
43	CMD5054-2	2.0m	20m	24	Diffused		2.2	20m	180m	100m	660n	5A		A	PD16ap Ø
44	HLMP5000	2.0m	20m	75	Diffused		2.0	20m	100m	50m	655n	5A			PD68d
45	L311DR	2.0m	20m	60	Diffused		3.0	10m	120m	30m	635n	5A			PD77g
46	L613DR	2.0m	20m	90			3.0	10m	120m	30m	635n	5A	Stackable		PD1056a
47	MS31C	2.0m	20m	40	Water-clear		2.0	20m	180m	70m	660n	4A		A	PD257
48	MS31T	2.0m	20m	40	Transparent		2.0	20m	180m	70m	660n	4A		A	PD257
49	MS31W	2.0m	20m	45	Milk-white		2.0	20m	100m	70m	660n	4A		A	PD257
50	MSB51C	2.0m	20m	20	Water-clear		2.0	20m	180m	70m	660n	4A			None
51	MSB52W	2.0m	20m	40	Milk-white		2.0	20m	180m	70m	660n	4A			PD50z
52	MV5074C	2.0m†	20m	70			2.0	20m	100m	50m	660n	5A		A	PD16s Ø
53	OPL72	2.0m	20m	80			3.0	20m	100m	50m	635n	5A			PD257f
54	SLP978C	2.0m†	20m		Transparent		2.1	20m	70m	25m	630n	28		A	PD489d
55	HLMP3001	2.0m	20m	90	Diffused	Rectangular	2.0	20m	100m	50m	655n	5A		B	PD540
56	LDR1102	2.0m	20m	70	Diffused	T-1	2.0	20m	200m	100m	665n	5A%	Tr/Tf 5ns Typ	B	PD16al Ø
57	MS51C	2.0m	20m	50	Water-clear	T-1	2.0	20m	100m	70m	660n	4A		A	PD258
58	MS51T	2.0m	20m	50	Transparent	T-1	2.0	20m	100m	70m	660n	4A		A	PD258
59	MS51W	2.0m	20m	65		T-1	2.0	20m	100m	70m	660n	4A		A	PD258
60	HLMP3003	2.0m	20m	75	Diffused	T-1 1/2	2.0	20m	100m	50m	655n	5A			PD940a
61	549-0101	2.0m†	20m	70	Diffused	T-1 3/4	2.0	20m	120m	50m	655n	4A		A	PD379 Ø
62	HLMP3201	2.0m	20m	60	Diffused	T-1 3/4	1.4	20m	100m	50m	655n	5A		B	PD392
63	HP5082-4791	2.0m	20m	60	Diffused	T-1 3/4	2.0	20m	100m	50m	655n	5A		A	PD50k Ø
64	MS52C	2.0m	20m	50	Water-clear	T-1 3/4	2.0	20m	180m	70m	660n	4A		A	PD258a
65	MS52D	2.0m	20m	65	Diffused	T-1 3/4	2.0	20m	180m	70m	660n	4A		A	PD258a
66	MS52T	2.0m	20m	50	Transparent	T-1 3/4	2.0	20m	180m	70m	660n	4A			PD258a
67	MS52W	2.0m	20m	65	Milk-white	T-1 3/4	2.0	20m	180m	70m	660n	4A			PD258a
68	MSB51D	2.0m	20m	40	Diffused	T-1 3/4	2.0	20m	180m	70m	660n	4A		B	PD16z
69	MSB51T	2.0m	20m	20	Transparent	T-1 3/4	2.0	20m	180m	70m	660n	4A			PD16z
70	MSB51W	2.0m	20m	40	Milk-white	T-1 3/4	2.0	20m	180m	70m	660n	4A			PD16z
71	MT3000UR	2.0m	20m	10	Water-clear	T-1 3/4	2.2	20m	55m	25m	660n	27	High Brightness	A	PD1202
72	MV5050	2.0m†	20m	50	Water-clear	T-1 3/4	2.2	20m	125m	100m	670n	5A		A	PD16a Ø
73	MV5052	2.0m†	20m	72	Transparent	T-1 3/4	2.2	20m	125m	100m	670n	5A		A	PD16a Ø
74	SBR2201	2.0m	20m		Water-clear	T-5/8	2.0	20m	80m	40m	660n	38		A	PD1110
75	SR101C	2.0m†	30m	30			1.9	30m	100m	50m	660n	X8§		A	PD12t Ø
76	SR104D	2.0m†	30m	80	Diffused		1.9	30m	100m	50m	660n	X8§		A	PD12t Ø
77	HLMP1801	2.1m	10m	140	Diffused		3.0	10m	135m	25m	635m	5A			PD1338
78	HLMP-L251	2.1m	10m	140	Diffused		3.0	10m	135m	30m	635n	5A		A	PD1339
79	CQW60U2(A)	2.2m☑	10m	110	Diffused	Panel-mount	2.6	10m	90m%	30m	700n	A §		A	PD1082 ☑
80	GL3HD1	2.2m	20m		Diffused	T-1	2.4	20m	70m	30m	635n	28		A	PD279 Ø
81	MV57642	2.5m	10m	90		T-1	3.0	10m	120m	30m	635n	5A		B	PD77m
82	TLHR4200	2.5m	10m	22	Transparent	T-1	3.0	20m	100m	30m	635n	5A%	High-efficiency		PD1190
83	SPR5633	2.5m	10m		Diffused	T-1 3/4	2.5	10m	75m	30m	700n	38		A	PD47b
84	TLUR5101	2.5m	10m	24	Water-clear	T-1 3/4	2.0	20m	100m	50m	660n	5A%		A	PD280k
85	TLUR5103	2.5m	10m	24	Water-clear	T-1 3/4	2.0	20m	100m	50m	660n	5A%		A	PD280k
86	MT240HR	2.5m	15m	75	Diffused		2.2	20m	70m	25m	635n	27		♦	PD478
87	TLS124	2.5m	15m		Diffused		2.8	20m	70m	25m	635n	27		A	None
88	AND114S	2.5m	15m		Diffused	T-1 3/4	2.8	20m	90m	20m	635n	5A		A	PD422a
89	L41-4SERIES	2.5m†	20m				2.2	10m		20m		5A	Built-In Resistor		PD1303a
90	LST5753	2.5m	20m	65	Diffused		3.0	20m	120m	35m	635n	5A		A	PD50r Ø
91	LST5753R5	2.5m	20m	65			5	20m	120m	35m	635n	5A	Built-In Resistor		PD50r Ø
92	LST5753R10	2.5m	20m	65			10	20m	120m	35m	635n	5A	Built-In Resistor		PD50r Ø
93	LTL907NK	2.5m	20m	160	Water-clear		2.4	20m	45m	30m	660n	5A	Mini	M	PD1140
94	MT2500UR	2.5m†	20m	10	Water-clear		2.4	20m	55m	25m	660n	27	High Brightness	A	PD258b
95	HLMP0301	2.5m	20m	100	Diffused	Rectangular	3.0	20m	135m	30m	635n	5A		A	PD262 ☑
96	ORL5753	2.5m	20m	65		Side-mount	3.0	20m	120m	35m	635n	5A			PD507 Ø
97	CMD57642	2.5m	20m	90	Diffused	T-1 1/2	3.0	20m	120m	30m	635n	5A		B	PD1150
98	LDR5002	2.5m	20m	70	Diffused	T-1 3/4	2.0	20m	200m	100m	665n	5A%	Tr/Tf 5ns Typ	A	PD28p Ø
99	LDR5091	2.5m	20m	24	Transparent	T-1 3/4	2.0	20m	200m	100m	665n	5A%	Tr/Tf 5ns Typ	B	PD16ak Ø
100	LDR5102	2.5m	20m	70	Diffused	T-1 3/4	2.0	20m	200m	100m	665n	5A%	Tr/Tf 5ns Typ	B	PD16ak Ø
101	L45RN-R2-2111	3.0m†			Fresnel	Panel-mount	2.5	35m	100m	35m		5A			PD399a Ø
102	L45RN-R2-2311	3.0m†			Fresnel	Panel-mount	2.5	35m	100m	35m		5A			PD399 Ø
103	L45RN-R6-2111	3.0m†			Fresnel	Panel-mount	6.0	35m	100m	35m		5A			PD399a Ø
104	L45RN-R6-2311	3.0m†			Fresnel	Panel-mount	6.0	35m	100m	35m		5A			PD399 Ø
105	L45RN-R12-2111	3.0m†			Fresnel	Panel-mount	12	35m	100m	35m		5A			PD399a Ø
106	L45RN-R12-2311	3.0m†			Fresnel	Panel-mount	12	35m	100m	35m		5A			PD399 Ø
107	L45RN-R24-2111	3.0m†			Fresnel	Panel-mount	24	35m	100m	35m		5A			PD399a Ø
108	L45RN-R24-2311	3.0m†			Fresnel	Panel-mount	24	35m	100m	35m		5A			PD399 Ø
109	OPL270	3.0m†		80	Diffused	T-1	2.5	20m		50m	690n				PD16ae Ø
110	OPL1270	3.0m†		80	Diffused	T-1	2.5	20m		50m	690n				PD15C Ø

SYMBOLS AND CODES EXPLAINED IN INTERPRETER

2. LED LAMPS - Red (Cont'd)

IN ORDER OF COLOR AND: (1) INTENSITY (2) IF TEST (3) BEAM ANGLE & (4) TYPE No.

LINE No.	4 TYPE NUMBER	1 LUMINOUS INTENSITY MIN (cd)	2 IF TEST (A)	3 BEAM ANGLE θ HI (°)	LENS TYPE	LAMP STYLE	VF MAX (V)	IF TEST (A)	PD RATED MAX (W)	IF RATED MAX (A)	PEAK WAVE-LENGTH λP (m)	TEMP. RANGE CODE - +	FEATURES	LEAD CODE	OUTLINE DRAWING
1	550-2404	3.0m	10m				3.0	10m	105m	35m	635n	5A			PD66b ☑
2	550-2405	3.0m	10m				3.0	10m	105m	35m	635n	5A			PD67b ☑
3	CQV80AL4(A)	3.0m	10m	100	Diffused		2.2	10m	215m	100m	650n	A §		A	PD262m
4	HLMP5030	3.0m	10m	65	Diffused		12	10m	135m	30m	635n	5A			PD68c
5	SR605C	3.0m	10m	7.0	Water-clear		2.4	10m	80m	40m	630n	4A%		A	PD285
6	SR615D(A)	3.0m	10m		Diffused		2.5	10m	100m	40m	630n	4A%		A	PD257g
7	SR615W(A)	3.0m	10m		Milk-white		2.5	10m	100m	40m	630n	4A%		A	PD257g
8	CQX10IV	3.0m	10m	40		Arch	3.0	10m	120m	30m	630n	XA§		A	PD431
9	559-2101-001	3.0m	10m			Panel-mount	3.0	10m	105m	35m	635n	5A		♦	PD991
10	559-2101-003	3.0m	10m			Panel-mount	3.0	10m	105m	35m	635n	5A		♦	PD991a
11	559-2101-004	3.0m	10m			Panel-mount	3.0	10m	105m	35m	635n	5A		♦	PD991b
12	559-2101-005	3.0m	10m			Panel-mount	3.0	10m	105m	35m	635n	5A		♦	PD991c
13	559-2101-006	3.0m	10m			Panel-mount	3.0	10m	105m	35m	635n	5A		♦	PD991d
14	559-2101-007	3.0m	10m			Panel-mount	3.0	10m	105m	35m	635n	5A		♦	PD991e
15	561-2101-050	3.0m	10m	65	Diffused	Panel-mount	3.0	10m	105m	35m	635n	5A			PD1017
16	561-2101-060	3.0m	10m	65	Diffused	Panel-mount	3.0	10m	105m	355m	635n	5A			PD1017a
17	561-2101-070	3.0m	10m	65	Diffused	Panel-mount	3.0	10m	105m	35m	635n	5A			PD1017b
18	561-2101-080	3.0m	10m	65	Diffused	Panel-mount	3.0	10m	105m	35m	635n	5A			PD1017c
19	561-2101-090	3.0m	10m	65	Diffused	Panel-mount	3.0	10m	105m	35m	635n	5A			PD1017d
20	561-2101-100	3.0m	10m	65	Diffused	Panel-mount	3.0	10m	105m	35m	635n	5A			PD1017e
21	CQW60A4(A)	3.0m	10m	110	Diffused	Panel-mount	2.2	10m	215m	100m	650n	A §		A	PD1082 ☑
22	CQW60AL4(A)	3.0m	10m	110	Diffused	Panel-mount	2.2	10m	215m	100m	650n	A §		A	PD1084 ☑
23	CQV70A4(A)	3.0m	10m	100	Diffused	Rectangular	2.2	10m	215m	100m	650n	A §		A	PD1085 ☑
24	CQV70AL4(A)	3.0m	10m	100	Diffused	Rectangular	2.2	10m	215m	100m	650n	A §		A	PD1086 ☑
25	CQW10A4(A)	3.0m	10m	100	Diffused	Rectangular	2.2	10m	215m	100m	650n	A §		A	PD922 ☑
26	CQW10AL3(A)	3.0m	10m	100	Diffused	Rectangular	2.2	10m	215m	100m	650n	A §		A	PD922 ☑
27	CQW10AL4(A)	3.0m	10m	100	Diffused	Rectangular	2.2	10m	215m	100m	650n	A §		A	PD922 ☑
28	550-2406	3.0m	10m			Side-mount	3.0	10m	105m	35m	635n	5A			PD68b ☑
29	CQS51-4(A)	3.0m	10m	70	Diffused	T-1	2.6	10m	90m%	30m	700n	A §		A	PD232j Ø
30	CQS51L4(A)	3.0m	10m	70	Diffused	T-1	2.6	10m	90m%	30m	700n	A §		A	PD232k Ø
31	CQW24	3m	10m	100	Diffused	T-1	2.2	10m	215m	100m	650n	A §		A	PD232j Ø
32	CQW24-4	3m	10m	100	Diffused	T-1	2.2	10m	215m	100m	650n	A §		A	PD232j Ø
33	CQW24L4	3m	10m	100	Diffused	T-1	2.2	10m	215m	100m	650n	A §		A	PD232k Ø
34	CQW24L	3m	10m	100	Diffused	T-1	2.2	10m	215m	100m	650n	A §		A	PD232k Ø
35	CQW54(A)	3m	10m	100	Diffused	T-1	2.2	10m	150m	60m	650n	A §		A	PD77 Ø
36	CQX51-4	3.0m	10m	70	Diffused	T-1		10m	90m%	30m	630n	A §		A	PD232j Ø
37	CQX54D(A)	3.0m	10m	30	Water-clear	T-1	3.0	10m	90m%	30m	630n	A §		A	PD232j Ø
38	521-9246	3.0m	10m	90	Diffused	T-1 1/2	3.0	10m	120m	20m	635n	5A		A	PD62c Ø
39	CQS82AL4	3.0m	10m	70	Diffused	T-1 1/2	2.2	10m	215m	100m	650n	A §		A	PD15e Ø
40	SR603C	3.0m	10m	25	Water-clear	T-1 1/2	2.4	10m	100m	50m	630n	4A%		A	PD280c
41	SR603C(3)	3m	10m			T-1 1/2	2.4	10m		50m	630n	4A%		A	PD280j
42	SR613D(A)	3.0m	10m		Diffused	T-1 1/2	2.5	10m	100m	50m	630n	4A%		A	PD280c
43	SR613W(A)	3.0m	10m		Milk-white	T-1 1/2	2.5	10m	100m	50m	630n	4A%		A	PD280c
44	CMD5753-2	3.0m	10m	65	Diffused	T-1 3/4	3.0	20m	105m	35m	635n	5A		A	PD16ao Ø
45	MV5054-3	3.0m	10m	24	Diffused	T-1 3/4	2.2	10m	125m	100m	660n	5A		A	PD90 Ø
46	NSC556R3	3.0m	10m	30	Diffused	T-1 3/4	2.8	10m	100m	40m	697n	5A		A	PD18c Ø
47	NSC5057R3	3.0m	10m	80	Diffused	T-1 3/4	2.8	10m	120m	35m	635n	5A		B	PD16ad Ø
48	NSC5567R3	3.0m	10m	30	Diffused	T-1 3/4	2.8	10m	120m	35m	635n	5A		A	PD16ad Ø
49	SL5014	3.0m	10m	60		T-1 3/4	2.8	10m		35m	645n	4A%			PD90c
50	SPR5531	3.0m	10m		Diffused	T-1 3/4	2.5	10m	75m	50m	700n	38		A	PD28b
51	XC1510R3	3.0m	10m	50	Diffused	T-1 3/4	2.8	10m	120m	35m	635n	5A		A	PD16aa Ø
52	MT140HR	3.0m	15m	80	Diffused		2.8	20m	100m	25m	635n	27		A	PD1162
53	MT140SLHR	3.0m	15m	80	Diffused		2.8	20m	100m	25m	635n	27			PD258c
54	TLR115	3.0m†	15m		Jewel		2.8	20m	90m	20m	700n	27		A	PD215a Ø
55	TLR115A	3.0m†	15m		Jewel		2.8	20m	90m	20m	700n	27		A	PD1198 Ø
56	AND124S	3.0m	15m		Diffused	T-1 1/4	2.8	20m	90m	20m	635n	5A		A	PD917
57	TLS114	3.0m	15m		Jewel	T-1 3/4	2.8	20m	100m	25m	635n	27		A	PD215
58	547-2001	3.0m	20m	70	Diffused		2.0	20m	80m	40m	650n	5A		A	PD378 ☑
59	555-2001	3.0m	20m	70	Diffused		2.0	20m	80m	40m	650n	5A		A	None
60	CMD5054-3	3.0m	20m	24	Diffused		2.2	20m	180m	100m	660n	5A		A	PD16ap Ø
61	L39UR-R2-2111	3.0m†	20m		Fresnel		3.0	20m	120m	30m	635n	5A			PD398b
62	L39UR-R2-2311	3.0m†	20m		Fresnel		3.0	20m	120m	30m	635n	5A			PD398c
63	L39UR-R6-2111	3.0m†	20m		Fresnel		7.0	20m	120m	30m	635n	5A			PD398b
64	L39UR-R6-2311	3.0m†	20m		Fresnel		7.0	20m	120m	30m	635n	5A			PD398c
65	L39UR-R12-2111	3.0m†	20m		Diffused		14	20m	120m	30m	635n	5A			PD398b
66	L39UR-R12-2311	3.0m†	20m		Fresnel		14	20m	120m	30m	635n	5A			PD398c
67	L39UR-R24-2111	3.0m†	20m		Fresnel		26	20m	120m	30m	635n	5A			PD398b
68	L39UR-R24-2311	3.0m†	20m		Fresnel		26	20m	120m	30m	635n	5A			PD398c
69	L41EN-R2-2111	3.0m	20m		Diffused		3.0	20m	120m	30m	635n	5A			PD398f
70	L41EN-R6-2111	3.0m	20m		Diffused		7.0	20m	120m	30m	635n	5A			PD398f
71	L41EN-R12-2111	3.0m	20m		Diffused		14	20m	120m	30m	635n	5A			PD398f
72	L41EN-R24-2111	3.0m	20m		Diffused		26	20m	120m	30m	635n	5A			PD398f
73	L111DR	3.0m	20m	60	Diffused		3.0	20m	120m	30m	635n	5A		A	PD50t
74	L611DR	3.0m	20m	65			3.0	20m	120m	30m	635n	5A	Stackable		PD1056a
75	L612DR	3.0m	20m	60	Diffused		3.0	20m	120m	30m	635n	5A	Stackable		PD1060
76	L615DR	3.0m	20m	60	Diffused		3.0	20m	120m	30m	635n	5A	Stackable		PD1057a
77	LA10001	3.0m	20m		Diffused		2.0	10m			700n			A	PD1275
78	LA10011	3.0m	20m		Diffused		1.6	10m			655n			A	PD1275
79	LM611DR	3.0m	20m	60	Diffused		3.0	20m	120m	30m	635n	5A	Stackable		PD1056a
80	LST5754	3.0m	20m	24	Diffused		3.0	20m	120m	35m	635n	5A		A	PD50r Ø
81	LST5754R5	3.0m	20m	24			5	20m	120m	35m	635n	5A	Built-In Resistor		PD50r Ø
82	LST5754R10	3.0m	20m	24			10	20m	120m	35m	635n	5A	Built-In Resistor		PD50r Ø
83	MT240UR	3.0m	20m	75	Diffused		2.2	20m	70m	25m	660n	27		♦	PD478
84	MV5777C	3.0m†	20m	180			3.0	20m	105m	35m	635n	5A		A	PD16e Ø
85	SEL2210R	3.0m	20m	100	Diffused		2.5	10m	90m	30m	630n	3A		A	PD322 Ø
86	SVD350C	3.0m	20m				2.0	20m			660n				CH ☑
87	LTL1262A	3.0m	20m	120	Diffused	Cylindrical	2.4	20m	100m	40m	660n	5A		B	PD588
88	VR5562X	3.0m	20m			Cylindrical	2.5	20m	75m	30m	630n	38			PD1394
89	ORL5754	3.0m	20m	24		Side-mount	3.0	20m	120m	35m	635n	5A			PD507 Ø
90	CQS82L4	3.0m	20m	70	Diffused	T-1 1/2	2.0	20m	100m%	50m	650n	A §		A	PD15e Ø
91	CMD5753	3.0m	20m	65	Diffused	T-1 3/4	3.0	20m	105m	35m	635n	5A		A	PD16ao Ø
92	CMD5754	3.0m	20m	24	Diffused	T-1 3/4	3.0	20m	105m	35m	635n	5A		A	PD16ao Ø
93	CQY24B4	3.0m	20m	55		T-1 3/4	2.0	20m	100m%	50m	650n	XA§		♦	PD56c
94	CQY24BL4(A)	3.0m	20m	60	Diffused	T-1 3/4	2.0	20m	100m%	50m	650n	5A%		A	PD56c
95	LST4754	3.0m	20m	65	Diffused	T-1 3/4	3.0	20m	120m	40m	635n	5A		A	PD16ag
96	MT550R	3.0m	20m	50	Transparent	T-1 3/4	5.4	20m	160m	30m	635n	27	2Chip	♦	PD1211
97	HLMP-Q100	3.0m	20m	70	Diffused	T-3/4	3.0	20m	85m	20m	662n	2A	EJ	A	PD180a
98	SR102(2)	3.0m†	30m	20			1.9	30m	100m	50m	660n	XA§		A	PD12u Ø
99	HLMP-M250	3.4m	10m	80	Transparent		3.0	10m	135m	30m	635n	5A			PD1342
100	TLS253	3.4m	15m		Diffused		2.8	20m	70m	30m	635n	27		A	None
101	HLMP-M200	3.4m	20m	135	Diffused		3.0	10m	135m	30m	635n	5A			PD1342
102	CQV60AL-III(A)	3.5m	10m	110		Rectangular	2.2	10m	250m	100m	650n	5A%			PD1084
103	TLR145	3.5m†	15m		Jewel	Cylindrical	2.8	20m	70m	25m	700n	27		A	PD1200
104	TLR113	3.5m†	15m		Jewel	T-1 3/4	2.8	20m	90m	20m	700n	27		A	PD215 Ø
105	TLR113A	3.5m†	15m		Transparent	T-1 3/4	2.8	20m	90m	20m	700n	27		A	PD422a Ø
106	LTL4261N	3.7m	20m	74	Diffused		2.4	20m	100m	40m	660n	5A		A	PD77c
107	LTL4266N	3.7m	20m	76	Water-clear		2.4	20m	100m	40m	660n	5A		B	PD77r
108	MSL47	4.0m†		30	Diffused	T-1	2.4	25m		40m	690n				PD55 Ø
109	OPL470	4.0m†		80	Diffused	T-1	2.5	20m		50m	635n				PD16ae Ø
110	OPL1470	4.0m†		80	Diffused	T-1	2.5	20m		50m	635n				PD15C Ø

SYMBOLS AND CODES EXPLAINED IN INTERPRETER

2. LED LAMPS - Red (Cont'd)

IN ORDER OF COLOR AND: (1) INTENSITY (2) IF TEST (3) BEAM ANGLE & (4) TYPE No.

LINE No.	4 TYPE NUMBER	1 LUMINOUS INTENSITY MIN (cd)	2 IF TEST (A)	3 BEAM ANGLE θ HI (°)	LENS TYPE	LAMP STYLE	VF MAX (V)	IF TEST (A)	PD RATED MAX (W)	IF RATED MAX (A)	PEAK WAVE-LENGTH λP (m)	TEMP. RANGE CODE - +	FEATURES	LEAD CODE	OUTLINE DRAWING
1	NSL5921	4.0m		45	Transparent	T-1 3/4	3.0	20m	120m	35m	697n	5A		B	PD392 Ø
2	HLMP4601	4.0m	10m	32	Diffused		3.0	10m	135m	30m	635n	5A		B	PD16f
3	PR3668S	4.0m	10m		Transparent		2.5	10m	75m	30m	700n	38	Lens:Pale Red		PD1396 Ø
4	LTL6213L	4.0m†	10m		Diffused	Arch	2.8	20m			697n			A	PD1225
5	MV57621	4.0m†	10m	60		T-1	3.0	10m	120m	1.0	635n	5A			PD77m
6	TLHR4100	4.0m	10m	22	Water-clear	T-1	3.0	20m	100m	50m	635n	5A%	For DC/Pulse Op		PD1190
7	TLXR4400	4.0m	10m	30	Diffused	T-1	2.1	20m	100m	50m	650n	5A%	Extreme Bright		PD1190
8	SR503C	4.0m	10m	25	Water-clear	T-1 1/2	2.4	10m	60m	30m	695n	4A%		A	PD280c
9	SR503C(3)	4m	10m			T-1 1/2	2.5	10m		30m	695n	4A%		A	PD280j
10	SR513C(A)	4m	10m		Water-clear	T-1 1/2	2.5	10m	60m	30m	695n	4A%		A	PD280c
11	HLMP3301	4m	10m	90		T-1 3/4	3.0	10m	135m	30m	635n	5A			PD16a
12	TLHR6200	4.0m	10m	28		T-1 3/4	3.0	20m	100m	30m	635n	5A%	High-efficiency	A	PD280k
13	TLXR5400	4.0m	10m	30	Diffused	T-1 3/4	2.1	20m	100m	50m	650n	XA§	High Brightness		PD1205
14	MT230HR	4.0m	15m	75	Transparent		2.2	20m	70m	25m	635n	27		♦	PD478
15	AND113S	4.0m	15m		Water-clear	T-1 3/4	2.8	20m	90m	20m	635n	5A		A	PD422a
16	TLR120	4.0m†	15m		Jewel	T-1 3/4	2.8	20m	90m	20m	700n	27		A	PD215 Ø
17	TLR120A	4.0m†	15m		Transparent	T-1 3/4	2.8	20m	90m	20m	700n	27		A	PD422a Ø
18	TLR146	4.0m†	15m		Milk-white	T-1 3/4	2.8	20m	70m	25m	700n	27		A	PD1199 Ø
19	TLS123	4.0m	15m		Water-clear	T-1 3/4	2.8	20m	70m	25m	635n	27		A	PD422
20	MT140UR	4.0m	20m	80	Diffused		2.2	20m	55m	25m	660n	27		A	PD1162
21	BR5562X	4.0m	20m			Cylindrical	2.0	20m	100m	50m	660n	38			PD1394
22	MV57123	4.0m	20m	100		Rectangular	3.0	20m	105m	35m	635n	5A			PD262h
23	LDR1103	4.0m	20m	70	Diffused	T-1	2.0	20m	200m	100m	665n	5A%	Tr/Tf 5ns Typ	B	PD16al Ø
24	CM4-7607	4.0m	20m	60	Diffused	T-1 3/4	3.0			30m		07	HiEff		PD1146a
25	LDR5003	4.0m	20m	70	Diffused	T-1 3/4	2.0	20m	200m	100m	665n	5A%	Tr/Tf 5ns Typ	A	PD28p Ø
26	LDR5092	4.0m	20m	24	Transparent	T-1 3/4	2.0	20m	200m	100m	665n	5A%	Tr/Tf 5ns Typ	B	PD16ak Ø
27	LDR5103	4.0m	20m	70	Diffused	T-1 3/4	2.0	20m	200m	100m	665n	5A%	Tr/Tf 5ns Typ	B	PD16ak Ø
28	MV5753	4.0m†	20m	65	Diffused	T-1 3/4	3.0	20m	105m	35m	635n	5A		A	PD16a Ø
29	ESBR2201	4.0m	20m		Water-clear	T-5/8	2.0	20m	80m	40m	660n	38		A	PD1110
30	HEMT3300	4.4m	10m	22			2.5	10m	120m	30m	670n	5A	NearIR		PD16f Ø
31	CMD57173	4.5m	20m		Diffused		2.5	20m	200m	35m	635n	48			PD473
32	MV57173	4.5m	20m				2.5	20m	200m	1.0	635n	48		♦	PD473 ⧄
33	MO51DR	4.5m	20m			T-1	2.5	20m	180m	70m	645n	4A		A	PD258
34	CQW24-5	5m	10m	100	Diffused	T-1	2.2	10m	215m	100m	650n	A §		A	PD232j Ø
35	CQW24L5	5m	10m	100	Diffused	T-1	2.2	10m	215m	100m	650n	A §		A	PD232k Ø
36	CQW54-5(A)	5.0m	10m	100	Diffused	T-1	2.2	10m	150m	60m	650n	A §		A	PD77 Ø
37	CQW93(A)	5.0m	10m	60	Transparent	T-1	2.2	10m	150m	60m	650n	A §		A	PD77 Ø
38	CQX51-5	5.0m	10m	70	Diffused	T-1		10m	90m%	30m	630n	A §		A	PD232j Ø
39	CQS82AL5	5m	10m	70	Diffused	T-1 1/2	2.2	10m	215m	100m	650n	A §		A	PD15e Ø
40	HLMP3351	5.0m	10m	50	Diffused	T-1 3/4	3.0	10m	135m	25m	635n	5A		B	PD392
41	MT130HR	5.0m	15m	50	Transparent		2.8	20m	100m	25m	635n	27		A	PD1162
42	MT221HR	5.0m†	15m		Transparent		2.8	20m	70m	25m	635n	27	Rect		PD1356
43	AND123S	5.0m	15m		Water-clear	T-1 1/4	2.8	20m	90m	20m	635n	5A		A	PD917
44	MT440HR	5.0m	15m	30	Diffused	T-1 3/4	2.8	20m	70m	25m	635n	27		♦	PD1199
45	TLS113	5.0m	15m		Water-clear	T-1 3/4	2.8	20m	100m	25m	635n	27		A	PD215
46	L291DR	5.0m	20m	60	Diffused		2.5	10m	75m	35m	700n	38			PD1297
47	LTL3262WC	5.0m	20m	100	Water-clear		2.4	20m	100m	40m	660n	5A	Rect	A	PD1284
48	MOC31DR	5.0m	20m		Diffused		3.0	20m			630n				PD50ac
49	MT130UR	5.0m	20m	50	Transparent		2.2	20m	55m	25m	660n	27		A	PD1162
50	MT230UR	5.0m	20m	75	Transparent		2.2	20m	70m	25m	660n	27		♦	PD478
51	MV5774C	5.0m†	20m	90			3.0	20m	105m	35m	635n	5A		A	PD16c Ø
52	SEL2210S	5.0m	20m	40	Water-clear		2.5	10m	90m	30m	630n	3A		A	PD322 Ø
53	SLP980C	5.0m†	20m		Transparent		2.1	20m	70m	25m	630n	28		A	PD1293g
54	MO32DR	5.0m	20m		Diffused	T-1	3.0	20m			630n				PD77h
55	MT640HR	5m	20m	20	Diffused	T-1	2.8	20m	70m	25m	635n	27		♦	PD1203
56	BL1ML3	5.0m*	50m	60			2.2	20m	120m	100m	660n	2A	Fiber Optc	A ⧄	PD12g Ø
57	HLMP-M251	5.4m	10m	80	Transparent		3.0	10m	135m	30m	635n	5A			PD1342
58	HLMP-M201	5.4m	20m	135	Diffused		3.0	10m	135m	30m	635n	5A			PD1342
59	GL3HD5	5.5m	20m				2.4	20m	70m	30m	635n	28			PD279
60	LTL4262N	5.6m	20m	60	Transparent		2.4	20m	100m	40m	660n	5A		B	PD77r
61	5753R5	6.0m†		65		T-1 3/4	5.0	20m		35m	635n		Built-In Resistor		PD379
62	5753R10	6.0m†		65		T-1 3/4	10	20m		35m	635n		Built-In Resistor		PD379
63	HLMP1320	6m	10m	45			3.0	20m	135m	30m	635n	5A			PD77g
64	HLMP1321	6m	10m	45			3.0	10m	135m	30m	635n	5A			PD77g
65	SR615C(A)	6m	10m		Water-clear		2.5	10m	100m	40m	630n	4A%		A	PD257g
66	HLMP1385	6.0m	10m	60	Diffused	T-1	3.0	10m	135m	30m	635n	5A		B	PD77m
67	SBR3431	6.0m	12m		Diffused	T-1	2.0	20m	100m	50m	660n	38		A	PD33
68	L32R-R2-2111T	6.0m	20m		Diffused		2.5	20m	75m	35m	700n	38			PD1324
69	L32R-R2-2311T	6.0m	20m		Diffused		2.5	20m	75m	35m	700n	38			PD1324a
70	L32R-R6-2111T	6.0m	20m		Diffused		7.0	20m	75m	35m	700n	38			PD1324
71	L32R-R6-2311T	6.0m	20m		Diffused		7.0	20m	75m	35m	700n	38			PD1324a
72	L32R-R12-2111T	6.0m	20m		Diffused		14	20m	75m	35m	700n	38			PD1324
73	L32R-R12-2311T	6.0m	20m		Diffused		14	20m	75m	35m	700n	38			PD1324a
74	L32R-R24-2111	6.0m	20m	28	Diffused		26	20m	75m	35m	700n	38			PD398g
75	L32R-R24-2111T	6.0m	20m		Diffused		26	20m	75m	35m	700n	38			PD1324
76	L32R-R24-2311	6.0m	20m	28	Diffused		26	20m	75m	35m	700n	38			PD398h
77	L32R-R24-2311T	6.0m	20m		Diffused		26	20m	75m	35m	700n	38			PD1324a
78	L121DR	6.0m	20m	60	Diffused		2.5	20m	75m	35m	700n	38		A	PD50n
79	L621DR	6.0m	20m	60	Diffused		2.5	20m	75m	35m	700n	38	Stackable		PD1056a
80	L622DR	6.0m	20m	60	Diffused		2.5	20m	75m	35m	700n	38	Stackable		PD1060
81	L625DR	6.0m	20m	60	Diffused		2.5	20m	75m	35m	700n	38	Stackable		PD1057a
82	LST5753R	6.0m†	20m	65	Diffused		3.0 §	20m	120m	35m	635n	5A	Built-In Resistor		PD50r Ø
83	MO31DR	6.0m	20m				2.5	20m	180m	70m	645n	4A		A	PD257
84	MT200UR	6.0m	20m	50	Transparent		2.2	20m	55m	25m	660n	27		A	PD1162
85	NSL7836	6.0m	20m	60	Diffused		2.0	20m	120m	35m	660n	5A		B	PD545 Ø
86	TLHR4101	6.3m	10m	22	Water-clear	T-1	3.0	20m	100m	50m	635n	5A%	For DC/Pulse Op		PD1190
87	TLHR4102	6.3m	10m	22	Water-clear	T-1	3.0	20m	100m	50m	635n	5A%	For DC/Pulse Op		PD1190
88	TLXR4100	6.3m	10m	22	Transparent	T-1	2.1	20m	100m	50m	650n	5A%	Extreme Bright		PD1190
89	TLXR4401	6.3m	10m	30	Diffused	T-1	2.1	20m	100m	50m	650n	5A%	Extreme Bright		PD1190
90	TLXR5401	6.3m	10m	30	Diffused	T-1 3/4	2.1	20m	100m	50m	650n	XA§	High Brightness		PD1205
91	CQV60AL-IV(A)	7.0m	10m	110		Rectangular	2.2	10m	250m	100m	650n	5A%			PD1084
92	HLMP3365	7.0m	10m	45		T-1 3/4	3.0	10m	135m	25m	635n	5A		B	PD392
93	SEL1210R	7.0m	20m	100	Diffused	T-1 3/4	2.5	10m	90m	30m	630n	3A		A	PD16n Ø
94	L41-2SERIES	7.5m†	20m				2.2	10m		20m		5A	Built-In Resistor		PD1303a
95	5754R5	8.0m†		24		T-1 3/4	5.0	20m		35m	635n		Built-In Resistor		PD379
96	5754R10	8.0m†		24		T-1 3/4	10	20m		35m	635n		Built-In Resistor		PD379
97	MV57622	8.0m†	10m	60		T-1	3.0	10m	120m	1.0	635n	5A			PD77m
98	HLMP3762	8.0m	10m	65	Diffused	T-1 1/2	3.0	10m	135m	30m	635n	5A			PD940a
99	L291CR	8.0m	20m	30	Water-clear		2.5	10m	75m	35m	700n	38			PD1297
100	LST5754R	8.0m†	20m	24	Diffused		3.0 §	20m	120m	35m	635n	5A	Built-In Resistor		PD50r Ø
101	MO31CR	8.0m	20m		Transparent		3.0	20m			630n				PD257e
102	MV5754	8.0m†	20m	24	Diffused	T-1 3/4	3.0	20m	105m	35m	635n	5A		A	PD16n Ø
103	SBR5531	8.0m	20m		Diffused	T-1 3/4	2.0	20m	100m	50m	660n	38		A	PD28b
104	SBR5633	8.0m	20m		Diffused	T-1 3/4	2.0	20m	100m	50m	660n	38		A	PD47b
105	NSC554R9	9.0m	10m	24	Transparent	T-1 3/4	2.8	10m	100m	40m	697n	5A		A	PD18c Ø
106	NSC5547R9	9.0m	10m	24	Transparent	T-1 3/4	2.8	10m	120m	35m	635n	5A		A	PD16ad Ø
107	L59CR2T	9.0m†	20m	30	Water-clear		3.0	20m	120m	30m	635n	5A		B	PD1310
108	L59CR2W	9.0m†	20m	30	Water-clear		3.0	20m	120m	30m	635n	5A		A	PD1309a
109	L59CR6W	9.0m†	20m	30	Water-clear		7.0	20m	120m	30m	635n	5A		A	PD1309a
110	L59CR12W	9.0m†	20m	30	Water-clear		14	20m	120m	30m	635n	5A		A	PD1309a

SYMBOLS AND CODES EXPLAINED IN INTERPRETER

2. LED LAMPS - Red (Cont'd)

IN ORDER OF COLOR AND: (1) INTENSITY (2) IF TEST (3) BEAM ANGLE & (4) TYPE No.

LINE No.	4 TYPE NUMBER	1 LUMINOUS INTENSITY MIN (cd)	2 IF TEST (A)	3 BEAM ANGLE θ HI (°)	LENS TYPE	LAMP STYLE	VF MAX (V)	IF TEST (A)	PD RATED MAX (W)	IF RATED MAX (A)	PEAK WAVE-LENGTH λP (m)	TEMP. RANGE CODE - +	FEATURES	LEAD CODE	OUTLINE DRAWING
1	L59CR24W	9.0m†	20m	30	Water-clear		26	20m	120m	30m	635n	5A		A	PD1309a
2	L59DR2T	9.0m†	20m	60	Diffused		3.0	20m	120m	30m	635n	5A		B	PD1310
3	L59DR2W	9.0m†	20m	60	Diffused		3.0	20m	120m	30m	635n	5A		A	PD1309a
4	L59DR6T	9.0m†	20m	60	Diffused		7.0	20m	120m	30m	635n	5A		B	PD1310
5	L59DR6W	9.0m†	20m	60	Diffused		7.0	20m	120m	30m	635n	5A		A	PD1309a
6	L59DR12T	9.0m†	20m	60	Diffused		14	20m	120m	30m	635n	5A		B	PD1310
7	L59DR12W	9.0m†	20m	60	Diffused		14	20m	120m	30m	635n	5A		A	PD1309a
8	L59DR24T	9.0m†	20m	60	Diffused		26	20m	120m	30m	635n	5A		B	PD1310
9	L59DR24W	9.0m†	20m	60	Diffused		26	20m	120m	30m	635n	5A		A	PD1309a
10	MOB51DR	9.0m	20m	40			2.5	20m	180m	70m	645n	4A			PD167
11	SLP136C50	10m†			Transparent		1.9	5.0m	70m	25m	700n	28		A	PD1293c
12	LLL49-1	10m†		18	Water-clear	T-1	2.4	25m		40m	635n				PD54 Ø
13	MSL49-1	10m†		18	Water-clear	T-1	2.4	25m		40m	635n				PD55 Ø
14	SLP138C50	10m†	5.0m		Transparent		1.9	5.0m	70m	25m	700n	28		A	PD1293d
15	SLP160C	10m†	5.0m		Transparent		1.9	5.0m	70m	25m	700n	28		A	PD1293h
16	SLP170C	10m†	5.0m		Transparent		1.9	5.0m	70m	25m	700n	28		A	PD1293p
17	CQW24-6	10m	10m	100	Diffused	T-1	2.2	10m	215m	100m	650n	A §		A	PD232j Ø
18	CQW24L6	10m	10m	100	Diffused	T-1	2.2	10m	215m	100m	650n	A §		A	PD232k Ø
19	CQW54-6(A)	10m	10m	60	Diffused	T-1	2.2	10m	150m	60m	650n	A §		A	PD77 Ø
20	CQW93-5(A)	10m	10m	60	Transparent	T-1	2.2	10m	150m	60m	650n	A §		A	PD77 Ø
21	CQX51-6	10m	10m	70	Diffused	T-1		10m	90m%	30m	630n	A §		A	PD232j Ø
22	CQX54D5(A)	10m	10m	30	Water-clear	T-1	3.0	10m	90m%	30m	630n	A §		A	PD232j Ø
23	CQX54L(A)	10m	10m	20	Water-clear	T-1	3.0	10m	90m%	30m	630n	A §		A	PD232k Ø
24	TLHR4103	10m	10m	22	Water-clear	T-1	3.0	20m	100m	50m	635n	5A%	For DC/Pulse Op		PD1190
25	TLHR4105	10m	10m	22	Water-clear	T-1	3.0	20m	100m	50m	635n	5A%	For DC/Pulse Op		PD1190
26	TLXR4101	10m	10m	22	Transparent	T-1	2.1	20m	100m	50m	650n	5A%	Extreme Bright		PD1190
27	CQS82AL6	10m	10m	70	Diffused	T-1 1/2	2.2	10m	215m	100m	650n	A §		A	PD15e Ø
28	SR613C(A)	10m	10m		Water-clear	T-1 1/2	2.5	10m	100m	50m	630n	4A%		A	PD280c
29	TLHR5100	10m	10m	12	Water-clear	T-1 3/4	3.0	20m	100m	30m	635n	XA§	High Efficiency	A	PD1025
30	MT430HR	10m	15m	20	Transparent	T-1 3/4	2.8	20m	70m	25m	635n	27		♦	PD1199
31	MT440UR	10m	15m	30	Diffused	T-1 3/4	2.2	20m	55m	25m	660n	27		♦	PD1199
32	L58D-R2W	10m†	20m	60	Diffused		4.0	20m	75m	35m	700n	38		A	PD400a
33	L58D-R6W	10m†	20m	60	Diffused		4.0	20m	75m	35m	700n	38		A	PD400a
34	L58D-R12W	10m†	20m	60	Diffused		4.0	20m	75m	35m	700n	38		A	PD400a
35	L58D-R24W	10m†	20m	60	Diffused		4.0	20m	75m	35m	700n	38		A	PD400a
36	SLP981A50	10m†	20m		Water-clear		2.1	20m	70m	25m	630n	28		A	PD1293m
37	L58D-R2T	10m†	20m	60	Diffused	Panel-mount	4.0	20m	75m	35m	700n	38		A	PD400
38	MT630HR	10m	20m	10	Transparent	T-1	2.8	20m	70m	25m	635n	27		♦	PD1203
39	MT640UR	10m	20m	20	Diffused	T-1	2.2	20m	55m	25m	660n	27		♦	PD1203
40	GL5HD5	10m	20m		Diffused	T-1 3/4	2.4	20m	70m	30m	635n	28		A	PD280a Ø
41	LDR5093	10m	20m	24	Transparent	T-1 3/4	2.0	20m	200m	100m	665n	5A%	Tr/Tf 5ns Typ	B	PD16ak Ø
42	LTL5163	10m	20m	60	Diffused	T-1 3/4	2.4	20m	100m	40m	660n	5A		A	PD1211
43	MOB51CR	10m	20m		Transparent	T-1 3/4	3.0	20m			630n				PD16j
44	MT540HR	10m	20m	20	Diffused	T-1 3/4	2.8	20m	70m	25m	635n	27		♦	PD1202
45	SLP138A	10m†	30m		Water-clear		1.9	30m	140m	50m	700n	28		A	PD1293b
46	SLP148B	10m†	30m		Diffused		1.9	30m	140m	50m	700n	28		A	PD1293f
47	CQX54	10m	30m	20	Water-clear	T-1	3.0	10m	90m%	30m	630n	A §		A	PD232j Ø
48	TLR143	11m†	15m		Transparent	T-1 3/4	2.8	20m	70m	25m	700n	27		A	PD1199 Ø
49	LTL10263W	11m	20m	48	Diffused		2.4	20m	100m	40m	660n	5A		♦	PD1214a
50	HLMP3315	12m	10m	35		T-1 3/4	3.0	10m	135m	30m	635n	5A			PD16a
51	HLMP3366	12m	10m	45	Water-clear	T-1 3/4			135m	30m	635n	5A	HiBrt		PD392
52	NSC554R12	12m	10m	24	Transparent	T-1 3/4	2.8	10m	100m	40m	697n	5A		A	PD18c Ø
53	L59UC-R6W	12m†	20m	30	Water-clear		7.0	20m	75m	35m	660n	5A		A	PD1309
54	L59UC-R12W	12m†	20m	30	Water-clear		14	20m	75m	35m	660n	5A		A	PD1309
55	L59UC-R24W	12m†	20m	30	Water-clear		26	20m	75m	35m	660n	5A		A	PD1309
56	L59UD-R6W	12m†	20m	60	Diffused		7.0	20m	75m	35m	700n	5A		A	PD1309
57	L59UD-R12W	12m†	20m	60	Diffused		14	20m	75m	35m	700n	5A		A	PD1309
58	L59UD-R24W	12m†	20m	60	Diffused		26	20m	75m	35m	700n	5A		A	PD1309
59	L633DR	12m	20m	70	Diffused		2.0	20m	100m	50m	660n	38	Stackable		PD1057b
60	ESBR3431	12m	20m		Diffused	T-1	2.0	20m	100m	50m	660n	38		A	PD33
61	TLR140	13m†	15m		Transparent	T-1 3/4	2.8	20m	70m	25m	700n	27		A	PD1199 Ø
62	HLMP-K100	14m	20m	60	Diffused	T-1 1/2	3.0	20m	85m	20m	662n	2A	EJ		PD1150
63	561-2401-050	15m	10m	28		Panel-mount	3.0	10m	105m	35m	635n	5A			PD1017
64	561-2401-060	15m	10m	28		Panel-mount	3.0	10m	105m	35m	635n	5A			PD1017a
65	561-2401-070	15m	10m	28		Panel-mount	3.0	10m	105m	35m	635n	5A			PD1017b
66	561-2401-080	15m	10m	28		Panel-mount	3.0	10m	105m	35m	635n	5A			PD1017c
67	561-2401-090	15m	10m	28		Panel-mount	3.0	10m	105m	35m	635n	5A			PD1017d
68	561-2401-100	15m	10m	28		Panel-mount	3.0	10m	105m	35m	635n	5A			PD1017e
69	521-9247	15m	10m	35		T-1 1/2	3.0	10m	120m	20m	635n	5A		A	PD62c Ø
70	NSC5547R15	15m	10m	24	Transparent	T-1 3/4	2.8	10m	120m	35m	635n	5A		A	PD16ad Ø
71	TLS132	15m	15m		Water-clear		2.8	20m	100m	25m	635n	27		A	None
72	SBR3401	15m	20m		Water-clear	T-1	2.0	20m	100m	50m	660n	38		A	PD33
73	MT540UR	15m	20m	20	Diffused	T-1 3/4	2.2	20m	55m	25m	660n	27		♦	PD1202
74	SBR5603	15m	20m		Water-clear	T-1 3/4	2.0	20m	100m	50m	660n	38		A	PD47b
75	SEL1210S	15m	20m	40	Water-clear	T-1 3/4	2.5	10m	90m	30m	630n	3A		A	PD16n Ø
76	SLP148A	15m†	30m		Water-clear		1.9	30m	140m	50m	700n	28		A	PD1293f
77	FH5.11	16m					1.7	20m		20m	660n			A	PD1113
78	CQW54-7(A)	16m	10m	60	Diffused	T-1	2.2	10m	150m	60m	650n	A §		A	PD77 Ø
79	CQW93-7(A)	16m	10m	60	Transparent	T-1	2.2	10m	150m	60m	650n	A §		A	PD77 Ø
80	CQX24	16m	10m	20	Water-clear	T-1	2.2	10m	215m	100m	650n	A §		A	PD232j Ø
81	CQX24L	16m	10m	20	Water-clear	T-1	2.2	10m	215m	100m	650n	A §		A	PD232k Ø
82	CQX54D7(A)	16m	10m	30	Water-clear	T-1	3.0	10m	90m%	30m	630n	A §		A	PD232j Ø
83	CQX54L7(A)	16m	10m	20	Water-clear	T-1	3.0	10m	90m%	30m	630n	A §		A	PD232k Ø
84	TLHR5101	16m	10m	12	Water-clear	T-1 3/4	3.0	20m	100m	30m	635n	XA§	High Efficiency	A	PD1025
85	TLHR5102	16m	10m	12	Water-clear	T-1 3/4	3.0	20m	100m	30m	635n	XA§	High Efficiency	A	PD1025
86	L58C-R2W	16m†	20m	30	Water-clear		4.0	20m	75m	35m	700n	38		A	PD400a
87	L58C-R6W	16m†	20m	30	Water-clear		4.0	20m	75m	35m	700n	38		A	PD400a
88	L58C-R12W	16m†	20m	30	Water-clear		4.0	20m	75m	35m	700n	38		A	PD400a
89	L58C-R24W	16m†	20m	30	Water-clear		4.0	20m	75m	35m	700n	38		A	PD400a
90	L58C-R2T	16m†	20m	30	Water-clear	Panel-mount	4.0	20m	75m	35m	700n	38		A	PD400
91	CQX54-7	16m	30m	20	Water-clear	T-1	3.0	10m	90m%	30m	630n	A §		A	PD232j Ø
92	L111CR	17m	20m	30	Water-clear		3.0	20m	120m	30m	635n	5A		A	PD50t
93	LST5752	17m	20m	28	Water-clear		3.0	20m	120m	35m	635n	5A		A	PD50r Ø
94	LST5752R5	17m	20m	28			5	20m	120m	35m	635n	5A	Built-In Resistor		PD50r Ø
95	LST5752R10	17m	20m	28			10	20m	120m	35m	635n	5A	Built-In Resistor		PD50r Ø
96	ORL5752	17m	20m	28			3.0	20m	120m	35m	635n	5A			None
97	CMD5752	17m	20m	28	Transparent	T-1 3/4	3.0	20m	105m	35m	635n	5A		A	PD16ao Ø
98	4000-2SERIES	20m†	10m				2.2	10m		20m		5A	Built-In Resistor		PD1039b
99	4000-5SERIES	20m†	10m				2.2	10m		20m		5A	Built-In Resistor		PD1039b
100	4100-2SERIES	20m†	10m				2.2	10m		20m		5A	Built-In Resistor		PD1039b
101	4100-5SERIES	20m†	10m				2.2	10m		20m		5A	Built-In Resistor		PD1039b
102	HLMP3316	20m	10m	35		T-1 3/4	3.0	10m	135m	30m	635n	5A			PD16a
103	LTL4263	20m†	10m		Diffused	T-1 3/4	2.0	20m			660n				PD1210a
104	LTL10263	20m†	10m		Diffused	T-1 3/4	2.0	20m			660n			A	PD1210b
105	550-5104	20m	20m	70	Diffused		2.0	20m	100m	50m	660n	38			PD66a
106	550-5105	20m	20m	70	Diffused		2.0	20m	100m	50m	660n	38			PD67a
107	L131DR	20m	20m	75	Diffused		2.0	20m	100m	50m	660n	38		A	PD50n
108	L631DR	20m	20m	75	Diffused		2.0	20m	100m	50m	660n	38	Stackable		PD1056a
109	L632DR	20m	20m	75	Diffused		2.0	20m	100m	50m	660n	38	Stackable		PD1060
110	L635DR	20m	20m	75	Diffused		2.0	20m	100m	50m	660n	38	Stackable		PD1057a

SYMBOLS AND CODES EXPLAINED IN INTERPRETER

2. LED LAMPS - Red (Cont'd)

IN ORDER OF COLOR AND: (1) INTENSITY (2) IF TEST (3) BEAM ANGLE & (4) TYPE No.

LINE No.	4 TYPE NUMBER	1 LUMINOUS INTENSITY MIN (cd)	2 IF TEST (A)	3 BEAM ANGLE θ HI (°)	LENS TYPE	LAMP STYLE	VF MAX (V)	IF TEST (A)	PD RATED MAX (W)	IF RATED MAX (A)	PEAK WAVE-LENGTH λP (m)	TEMP. RANGE CODE - +	FEATURES	LEAD CODE	OUTLINE DRAWING
1	LA5051D	20m	20m	24	Diffused		1.7	10m			660n			A	PD1247e
2	VR3668S	20m	20m		Transparent		2.5	20m	75m	30m	630n	38	Lens:Pale Red		PD1396 Ø
3	HLMP0363	20m	20m	18	Water-clear	Herm. Can	3.0	20m	120m	35m	635n	6A	Herm	B	PD84
4	HLMP0391	20m	20m	18	Water-clear	Herm. Can	3.0	20m	120m	35m	635n	6A	Herm	B	PD84
5	HLMP0392	20m	20m	18	Water-clear	Herm. Can	3.0	20m	120m	35m	635n	6A	Herm	B	PD84
6	559-5101-001	20m	20m	70	Diffused	Panel-mount	2.0	20m	100m	50m	660n	38			PD991
7	559-5101-003	20m	20m	70	Diffused	Panel-mount	2.0	20m	100m	50m	660n	38			PD991a
8	559-5101-004	20m	20m	70	Diffused	Panel-mount	2.0	20m	100m	50m	660n	38			PD991b
9	559-5101-005	20m	20m	70	Diffused	Panel-mount	2.0	20m	100m	50m	660n	38			PD991c
10	559-5101-006	20m	20m	70	Diffused	Panel-mount	2.0	20m	100m	50m	660n	38			PD991d
11	559-5101-007	20m	20m	70	Diffused	Panel-mount	2.0	20m	100m	50m	660n	38			PD991e
12	561-5101-050	20m	20m	70	Diffused	Panel-mount	2.0	20m	100m	50m	660n	38			PD1017
13	561-5101-060	20m	20m	70	Diffused	Panel-mount	2.0	20m	100m	50m	660n	38			PD1017a
14	561-5101-070	20m	20m	70	Diffused	Panel-mount	2.0	20m	100m	50m	660n	38			PD1017b
15	561-5101-080	20m	20m	70	Diffused	Panel-mount	2.0	20m	100m	50m	660n	38			PD1017c
16	561-5101-090	20m	20m	70	Diffused	Panel-mount	2.0	20m	100m	50m	660n	38			PD1017d
17	561-5101-100	20m	20m	70	Diffused	Panel-mount	2.0	20m	100m	50m	660n	38			PD1017e
18	HLMP0364	20m	20m	18	Water-clear	Panel-mount	3.0	20m	120m	35m	635n	6A	Herm	B	PD369
19	HLMP0365	20m	20m	18	Water-clear	Panel-mount	3.0	20m	120m	35m	635n	6A	Herm	B	PD369
20	HLMP0366	20m	20m	18	Water-clear	Panel-mount	3.0	20m	120m	35m	635n	6A	Herm	B	PD369
21	550-5106	20m	20m	70	Diffused	Side-mount	2.0	20m	100m	50m	660n	38			PD68a
22	MT630UR	20m	20m	10	Transparent	T-1	2.2	20m	55m	25m	660n	27		♦	PD1203
23	TLUR164	20m†	20m		Diffused	T-1	2.2	20m	55m	25m	660n	27		A	PD1203 Ø
24	HLMP-D100	20m	20m	65	Diffused	T-1 1/2	3.0	20m	85m	20m	662n	2A	EJ		PD940a
25	ESBR5531	20m	20m		Diffused	T-1 3/4	2.0	20m	100m	50m	660n	38		A	PD28b
26	ESBR5633	20m	20m		Diffused	T-1 3/4	2.0	20m	100m	50m	660n	38		A	PD47b
27	MT530HR	20m	20m	10	Transparent	T-1 3/4	2.8	20m	70m	25m	635n	27		♦	PD1202
28	CQW93-6(A)	22m⊘	10m	60	Transparent	T-1	2.2	10m	150m	60m	650n	A §		A	PD77 Ø
29	CQX54D6(A)	22m	10m	30	Water-clear	T-1	3.0	10m	90m%	30m	630n	A §		A	PD232j Ø
30	560-0101	23m⊘	30m	65	Diffused	T-1 3/4	§	35m			635n	57			PD479
31	560-0102	23m⊘	30m	65	Diffused	T-1 3/4	4.3	25m	108m		635n	57			PD479
32	560-0103	23m⊘	30m	65	Diffused	T-1 3/4	6.0	25m	150m		635n	57			PD479
33	560-0104	23m⊘	30m	65	Diffused	T-1 3/4	7.2	25m	180m		635n	57			PD479
34	560-0105	23m⊘	30m	65	Diffused	T-1 3/4	12	20m	240m		635n	57			PD479
35	560-0106	23m⊘	30m	65	Diffused	T-1 3/4	14	21m	302m		635n	57			PD479
36	560-0107	23m⊘	30m	65	Diffused	T-1 3/4	17	20m	336m		635n	57			PD479
37	NSL7830	24m	20m	45	Water-clear		2.0	20m	120m	35m	660n	5A		B	PD545 Ø
38	ESBR3401	24m	20m		Water-clear	T-1	2.0	20m	100m	50m	660n	38		A	PD33
39	HLMP1340	24m	20m	45	Water-clear	T-1	3.0	20m	135m	30m	635n	5A		B	PD77m
40	TLHR5103	25m	10m	12	Water-clear	T-1 3/4	3.0	20m	100m	30m	635n	XA§	High Efficiency	A	PD1025
41	TLHR5105	25m	10m	12	Water-clear	T-1 3/4	3.0	20m	100m	30m	635n	XA§	High Efficiency	A	PD1025
42	TLXR5100	25m	10m	12	Water-clear	T-1 3/4	2.0	20m	100m	50m	650n	XA§			PD1205
43	CQX24-8	30m	10m	20	Water-clear	T-1	2.2	10m	215m	100m	650n	A §		A	PD232j Ø
44	CQX24L8	30m	10m	20	Water-clear	T-1	2.2	10m	215m	100m	650n	A §		A	PD232k Ø
45	CQX54L8(A)	30m	10m	20	Water-clear	T-1	3.0	10m	90m%	30m	630n	A §		A	PD232k Ø
46	MT430UR	30m	15m	20	Transparent	T-1 3/4	2.2	20m	55m	25m	660n	27		♦	PD1199
47	7410-2SERIES	30m	20m				2.5	20m	125m	50m		38	xx Res	A	PD1304a
48	7410-5SERIES	30m	20m				2.5	20m	125m	50m		38	xx Res	A	PD1304a
49	7411-2SERIES	30m	20m				2.5	20m	125m	50m		38	xx Res	A	PD1304a
50	7411-5SERIES	30m	20m				2.5	20m	125m	50m		38	xx Res	A	PD1304a
51	7430-2SERIES	30m	20m				2.5	20m	125m	50m		38	xx Res	A	PD1304c
52	7430-5SERIES	30m	20m				2.5	20m	125m	50m		38	xx Res	A	PD1304c
53	7431-2SERIES	30m	20m				2.5	20m	125m	50m		38	xx Res	A	PD1304c
54	7431-5SERIES	30m	20m				2.5	20m	125m	50m		38	xx Res	A	PD1304c
55	7450-2SERIES	30m	20m				2.5	20m	125m	50m		38	xx Res	A	PD1304b
56	7450-5SERIES	30m	20m				2.5	20m	125m	50m		38	xx Res	A	PD1304b
57	7451-2SERIES	30m	20m				2.5	20m	125m	50m		38	xx Res	A	PD1304b
58	7451-5SERIES	30m	20m				2.5	20m	125m	50m		38	xx Res	A	PD1304b
59	GL5HD10	30m	20m				2.4	20m	70m	30m	635n	28			None Ø
60	559-5501-005	30m	20m	30	Water-clear	Panel-mount	2.0	20m	100m	50m	660n	38			PD991c
61	559-5501-006	30m	20m	30	Water-clear	Panel-mount	2.0	20m	100m	50m	660n	38			PD991d
62	559-5501-007	30m	20m	30	Water-clear	Panel-mount	2.0	20m	100m	50m	660n	38			PD991e
63	CMD5752-2	30m	20m	28	Transparent	T-1 3/4	3.0	20m	105m	35m	635n	5A		A	PD16ao Ø
64	ESBR5603	30m	20m		Water-clear	T-1 3/4	2.0	20m	100m	50m	660n	38		A	PD47b
65	CQX54-8	30m	30m	20	Water-clear	T-1	3.0	10m	90m%	30m	630n	A §		A	PD232j Ø
66	HLMP3390	35m	20m	32	Water-clear		3.0	20m	135m	30m	635n	5A		B	PD941
67	NSL7816	35m	20m	90	Diffused	T-1 3/4	2.0	20m	120m	35m	660n	5A		B	PD284 Ø
68	5752R5	40m†		28		T-1 3/4	5.0	20m		35m	635n		Built-In Resistor		PD379
69	5752R10	40m†		28		T-1 3/4	10	20m		35m	635n		Built-In Resistor		PD379
70	TLXR5101	40m	10m	12	Water-clear	T-1 3/4	2.1	20m	100m	50m	650n	XA§	Extreme Bright		PD1205
71	BR3668S	40m	20m		Transparent		2.0	20m	100m	50m	660n	38	Lens:Pale Red		PD1396 Ø
72	L121CR	40m	20m	30	Water-clear		2.5	20m	75m	35m	660n	38		A	PD50n
73	LST5752R	40m†	20m	28	Water-clear		3.0 §	20m	120m	35m	635n	5A	Built-In Resistor		PD50r Ø
74	SLP938C50	40m†	20m		Transparent		2.1	20m	70m	25m	630u	28		A	PD1293d
75	L32R-R2-2111	40m	20m	28		Panel-mount	2.0	20m	125m	50m	660n	3A			PD1058b
76	L32R-R2-2311	40m	20m	28		Panel-mount	2.0	20m	125m	50m	660n	3A			PD1058a
77	L32R-R6-2111	40m	20m	28		Panel-mount	6.0	20m	125m	50m	660n	3A			PD1058b
78	L32R-R6-2311	40m	20m	28		Panel-mount	6.0	20m	125m	50m	660n	3A			PD1058a
79	L32R-R12-2111	40m	20m	28		Panel-mount	12	20m	125m	50m	660n	3A			PD1058b
80	L32R-R12-2311	40m	20m	28		Panel-mount	12	20m	125m	50m	660n	3A			PD1058a
81	TLUR163	40m†	20m		Transparent	T-1	2.2	20m	55m	25m	660n	27		A	PD1203 Ø
82	MV5752	40m†	20m	28	Transparent	T-1 3/4	3.0	20m	105m	35m	635n	5A		A	PD16a Ø
83	SBR5501	40m	20m		Water-clear	T-1 3/4	2.0	20m	100m	50m	660n	38		A	PD28b
84	MT340UR	45m†	20m	40	Diffused		2.5	20m	55m	25m	660n	27	High Brightness	A	PD1357
85	E1020F	50m					2.0	100m		100m	660n				PD78
86	E1020	50m				Herm. Can	2.0	100m		100m	660n				TO-18 Ø
87	CQX24-9	50m	10m	20	Water-clear	T-1	2.2	10m	215m	100m	650n	A §		A	PD232j Ø
88	CQX24L9	50m	10m	20	Water-clear	T-1	2.2	10m	215m	100m	650n	A §		A	PD232k Ø
89	CQX54L9(A)	50m	10m	20	Water-clear	T-1	3.0	10m	90m%	30m	630n	A §		A	PD232k Ø
90	LTL10264	50m†	10m		Transparent	T-1 3/4	2.0	20m			660n			A	PD1210b
91	LTL10268	50m†	10m		Water-clear	T-1 3/4	2.0	20m			660n			A	PD1210b
92	TLUR144	50m†	15m		Diffused	T-1 3/4	2.2	20m	55m	25m	660n	27		A	PD1199 Ø
93	MT360UR	50m†	20m	40	Milk-white		2.5	20m	55m	25m	660n	27	High Brightness	A	PD1357
94	SLP936C50	50m†	20m		Transparent		2.1	20m	70m	25m	630u	28		A	PD1293c
95	MT220UR	50m	20m	10	Water-clear	T-1 3/4	2.2	20m	55m	25m	660n	27	High Brightness	♦	PD1202
96	MT530UR	50m	20m	10	Transparent	T-1 3/4	2.2	20m	55m	25m	660n	27		♦	PD1202
97	CQX54-9	50m	30m	20	Water-clear	T-1	3.0	10m	90m%	30m	630n	A §		A	PD232j Ø
98	LTL4264	80m†	10m		Transparent	T-1 3/4	2.0	20m			660n			A	PD1210a
99	LTL4268	80m†	10m		Water-clear	T-1 3/4	2.0	20m			660n			A	PD1210a
100	550-5504	80m	20m	30	Water-clear		2.0	20m	100m	50m	660n	38			PD66a
101	550-5505	80m	20m	30	Water-clear		2.0	20m	100m	50m	660n	38			PD67a
102	L131CR	80m	20m	30	Water-clear		2.0	20m	100m	50m	660n	38		A	PD50n
103	559-5501-001	80m	20m	30	Water-clear	Panel-mount	2.0	20m	100m	50m	660n	38			PD991
104	559-5501-003	80m	20m	30	Water-clear	Panel-mount	2.0	20m	100m	50m	660n	38			PD991a
105	559-5501-004	80m	20m	30	Water-clear	Panel-mount	2.0	20m	100m	50m	660n	38			PD991b
106	561-5501-050	80m	20m	30	Diffused	Panel-mount	2.0	20m	125m	50m	660n	38			PD1017
107	561-5501-060	80m	20m	30	Water-clear	Panel-mount	2.0	20m	100m	50m	660n	38			PD1017a
108	561-5501-070	80m	20m	30	Water-clear	Panel-mount	2.0	20m	100m	50m	660n	38			PD1017b
109	561-5501-080	80m	20m	30	Water-clear	Panel-mount	2.0	20m	100m	50m	660n	38			PD1017c
110	561-5501-090	80m	20m	30	Water-clear	Panel-mount	2.0	20m	100m	50m	660n	38			PD1017d

SYMBOLS AND CODES EXPLAINED IN INTERPRETER

IN ORDER OF COLOR AND: (1) INTENSITY (2) IF TEST (3) BEAM ANGLE & (4) TYPE No.

LINE No.	4 TYPE NUMBER	1 LUMINOUS INTENSITY MIN (cd)	2 IF TEST (A)	3 BEAM ANGLE θ HI (°)	LENS TYPE	LAMP STYLE	VF MAX (V)	IF TEST (A)	PD RATED MAX (W)	IF RATED MAX (A)	PEAK WAVE-LENGTH λP (m)	TEMP. RANGE CODE - +	FEATURES	LEAD CODE	OUTLINE DRAWING
1	561-5501-100	80m	20m	30	Water-clear	Panel-mount	2.0	20m	100m	50m	660n	38			PD1017e
2	550-5506	80m	20m	30	Water-clear	Side-mount	2.0	20m	100m	50m	660n	38			PD68a
3	HLMP3750	80m	20m	24	Water-clear	T-1 1/2	3.0	20m	135m	30m	635n	5A		B	PD940
4	ESBR5501	80m	20m		Water-clear	T-1 3/4	2.0	20m	100m	50m	660n	38		A	PD28b
5	LTL4264L1	80m	20m	16	Transparent	T-1 3/4	2.4	20m	100m	40m	660n	5A		A	PD1211
6	LTL4268L1	80m	20m	16	Water-clear	T-1 3/4	2.4	20m	100m	40m	660n	5A		A	PD1211
7	NSL7810	80m	20m	24	Water-clear	T-1 3/4	2.0	20m	120m	35m	660n	5A		B	PD284 Ø
8	560-0401	85m	30m	28		T-1 3/4	§	35m			635n	57			PD479
9	560-0402	85m	30m	28		T-1 3/4	4.3	25m	108m		635n	57			PD479
10	560-0403	85m	30m	28		T-1 3/4	6.0	25m	150m		635n	57			PD479
11	560-0404	85m	30m	28		T-1 3/4	7.2	25m	180m		635n	57			PD479
12	560-0405	85m	30m	28		T-1 3/4	12	20m	240m		635n	57			PD479
13	560-0406	85m	30m	28		T-1 3/4	14	21m	302m		635n	57			PD479
14	560-0407	85m	30m	28		T-1 3/4	17	20m	336m		635n	57			PD479
15	560-0408	85m	30m	28		T-1 3/4	24	16m	461m		635n	57			PD479
16	LTL4264L2	90m	20m	16	Transparent	T-1 3/4	2.4	20m	100m	40m	660n	5A		A	PD1211
17	LTL4268L2	90m	20m	16	Water-clear	T-1 3/4	2.4	20m	100m	40m	660n	5A		A	PD1211
18	CQX24-10	100m	10m	20	Water-clear	T-1	2.2	10m	215m	100m	650n	A §		A	PD232j Ø
19	CQX24L10	100m	10m	20	Water-clear	T-1	2.2	10m	215m	100m	650n	A §		A	PD232k Ø
20	TLUR143	100m†	15m		Transparent	T-1 3/4	2.2	20m	55m	25m	660n	27		A	PD1199 Ø
21	TLUR154	100m†	20m		Diffused	T-1 3/4	2.2	20m	55m	25m	660n	27		A	PD1202 Ø
22	MT330UR	120m†	20m	40	Transparent		2.5	20m	55m	25m	660n	27	High Brightness	A	PD1357
23	MT350UR	150m†	20m	40	Water-clear		2.5	20m	55m	25m	660n	27	High Brightness	A	PD1357
24	LTL4264H3	160m	20m	16	Transparent	T-1 3/4	2.4	20m	100m	40m	660n	5A		A	PD1211
25	LTL4268H3	160m	20m	16	Water-clear	T-1 3/4	2.4	20m	100m	40m	660n	5A		A	PD1211
26	ER300	200m					2.0	20m	100m	50m	660n	38			PD1105
27	LTL283CK-L1	200m	20m	12	Water-clear		2.4	20m	100m	40m	660n	5A		A	PD1360
28	TLUR153	200m†	20m		Transparent	T-1 3/4	2.2	20m	55m	25m	660n	27		A	PD1202 Ø
29	LTL4264H4	230m	20m	16	Transparent	T-1 3/4	2.4	20m	100m	40m	660n	5A		A	PD1211
30	LTL4268H4	230m	20m	16	Water-clear	T-1 3/4	2.4	20m	100m	40m	660n	5A		A	PD1211
31	FH511	300m	30m				2.0	30m	140m	70m	660n	38			PD1383
32	ER500	400m					2.0	20m	100m	50m	660n	38			PD1105
33	LTL283CK-L2	400m	20m	12	Water-clear		2.4	20m	100m	40m	660n	5A		A	PD1360
34	MT400UR	400m†	20m	10	Water-clear	T-1 3/4	2.5	20m	55m	25m	660n	27	High Brightness	♦	PD1202
35	LN235RPH	500m†	15m		Diffused		2.1	20m	70m	25m	700n	28		A	PD558
36	CMD5050	500m	20m	70	Water-clear	T-1 3/4	2.2	20m	180m	100m	660n	5A		B	PD16ao Ø
37	ER700	600m					2.0	20m	100m	50m	660n	38			PD1105
38	LA5511D	600m	20m	50	Diffused		1.6	10m			655n			A	PD1249
39	LA5511DH	600m	20m	50	Diffused		2.0	10m			700n			A	PD1249
40	H1000(1)	700m					2.5	20m	125m	50m	660n	38			PD1105
41	LTL283CK-H3	700m	20m	12	Water-clear		2.4	20m	100m	40m	660n	5A		A	PD1360
42	MT1000UR	700m	20m	10	Water-clear	T-1 3/4	2.2	20m	55m	25m	660n	27	High Brightness	A	PD1202
43	MT800UR	800m†	20m	10	Water-clear		2.4	20m	55m	25m	660n	27	High Brightness	A	PD258b
44	CQV70-2(A)	1.0	10m	100	Diffused	Rectangular	3.0	10m	90m%	30m	630n	A §		A	PD1085 Ø
45	H2000	1.4					2.5	20m	125m	50m	660n	38			PD1105
46	H3000	2.4					2.5	20m	125m	50m	660n	38			PD1105
47	CQT11	25	10m			Rectangular	1.7	10m		100m	565n		650n	A	PD262n
48	521-9185	100 Ø	20m		Water-clear	T-3/4	2.0	20m	80m	40m	650n	5A		B	PD36b
49	AL112D	150 $	10m			Herm. Can	2.0	10m		11m		67			PD310 Ø
50	AL112I	250 $	10m			Herm. Can	2.0	10m		11m		67			PD310 Ø
51	AL112V	250 $	10m			Herm. Can	2.0	10m		11m		67			PD310 Ø
52	AL112G	350 $	10m			Herm. Can	2.0	10m		11m		67			PD310 Ø
53	AL112B	600 $	10m			Herm. Can	2.0	10m		11m		67			PD310 Ø
54	AL112SZ	600 $	10m			Herm. Can	2.0	10m		11m		67			PD310 Ø
55	AL112A	1.0k$	10m			Herm. Can	2.0	10m		11m		67			PD310 Ø
56	AL112E	1.0k$	10m			Herm. Can	2.0	10m		11m		67			PD310 Ø

LED LAMP, ORANGE/AMBER

60	SLM13D					Rectangular	2.0	10m	75m	25m	610n				PD1140
61	LED2041	1.3n	10m		Diffused	Rectangular	2.5	10m	180m	50m	635n	28		A	PD909
62	LED2042	1.3n	10m		Diffused	Rectangular	2.5	10m	180m	50m	635n	28		A	PD909
63	LED2043	1.3n	10m		Water-clear	Rectangular	2.5	10m	180m	50m	635n	28		A	PD909
64	LED2044	1.3n	10m		Water-clear	Rectangular	2.5	10m	180m	50m	635n	28		A	PD909
65	LED1041	500n					2.5	20m	100m	35m	655n	5A			PD544
66	SY431D	100u	10m		Diffused	Cylindrical	2.4	10m	100m	40m	590n	4A%		A	PD468
67	SY435D	.20m	10m				2.4	10m	100m	40m	590n	4A%		A	PD426
68	SY438D	200u	10m				24	10m	100m	40m	590n	4A%			PD1241
69	SY439D	200u	10m				2.4	10m	100m	40m	590n	4A%		A	PD1243
70	SEL1723D	200u	10m			Rectangular	2.5	10m	80m	30m	587n	3A		A	PD383
71	SEL1923D	0.2m	10m		Diffused	Rectangular	2.5	10m	90m	30m	587n	3A		A	PD383
72	SEL1924D	0.2m	10m		Diffused	Rectangular	2.5	10m	90m	30m	587n	3A		A	PD383a
73	SY432D	200u	10m		Diffused	Rectangular	2.4	10m	100m	40m	590n	4A%		A	PD467
74	SY436D	0.2m	10m			Rectangular	2.4	100m		40m	590n	4A%		A	PD951
75	SY437D	0.2m	10m			Rectangular	2.4	100m		40m	590n	4A%		A	PD949
76	SY425D	200u	10m		Diffused	T-1 3/4	2.5	10m	100m	10m	570n	4A%	Max IF 40mA,Vr 5V	A	PD1373a
77	LTL1274A	300u	10m	120	Diffused	Cylindrical	2.8	20m	60m	20m	600n	5A		A	PD1218
78	LTL2223A	300u	10m	200		Cylindrical	2.8	20m	100m	30m	635n	5A		A	PD1219
79	LTL2224RT	300u	10m	150	Transparent	Cylindrical	2.8	20m	100m	30m	635n	5A		B	PD1362
80	LTL2271A	300u	10m	180		Cylindrical	2.8	20m	60m	20m	600n	5A		♦	PD1285
81	LTL2291A	300u	10m	180		Cylindrical	2.8	20m	100m	30m	635n	5A		♦	PD1285
82	LTL2293A	300u	10m	200		Cylindrical	2.8	20m	100m	30m	635n	5A		A	PD1219
83	LTL3225S	300u	10m	150	Diffused	Rectangular	2.8	20m	100m	30m	635n	5A		A	PD1222
84	LTL3271A	300u	10m	124	Diffused	Rectangular	2.8	20m	60m	20m	600n	5A		A	PD1220
85	LTL3295S	300u	10m	150	Diffused	Rectangular	2.8	20m	100m	30m	635n	5A		A	PD1222
86	LTL13221AL	300u	10m	130	Diffused	Rectangular	2.8	20m	100m	30m	635n	5A		A	PD1229
87	LTL13225A	300u	10m	150		Rectangular	2.8	20m	100m	30m	635n	5A		♦	PD1363
88	LTL13278A	300u	10m	180	Diffused	Rectangular	2.8	20m	60m	20m	600n	5A		A	PD1230
89	LTL13295A	300u	10m	150		Rectangular	2.8	20m	100m	30m	635n	5A		♦	PD1363
90	LTL9224A	300u	10m	120	Diffused	Square	2.8	20m	100m	30m	635n	5A		A	PD1228
91	TLSO6600	300u	20m	100			3.0	20m	100m	30m	635n	5A%	Orange-Red		PD1196
92	AND1240	.40m	10m		Diffused		2.8	20m	70m	25m	610n	5A		A	PD478
93	LTL23223A	400u	10m	140			2.8	20m	100m	30m	635n	5A	Rect	A	PD1364
94	LTL1224A	400u	10m	120	Diffused	Cylindrical	2.8	20m	100m	30m	635n	5A		A	PD1218
95	LTL1294A	400u	10m	120	Diffused	Cylindrical	2.8	20m	100m	30m	635n	5A		A	PD1218
96	LTL2221A	400u	10m	180		Cylindrical	2.8	20m	100m	30m	635n	5A		♦	PD1285
97	LTL2294WC	400u	10m	150	Water-clear	Cylindrical	2.8	20m	100m	30m	635n	5A		B	PD1362
98	TLSO3700	400u	10m	100	Diffused	Cylindrical	3.0	10m	100m	30m	630n	5A%			PD1195
99	LTL3221A	400u	10m	124	Diffused	Rectangular	2.8	20m	100m	30m	635n	5A		A	PD1220
100	LTL3223A	400u	10m	130	Diffused	Rectangular	2.8	20m	100m	30m	635n	5A		A	PD1221
101	LTL3277A	400u	10m	120	Diffused	Rectangular	2.8	20m	60m	20m	600n	5A		A	PD1223
102	LTL3278A	400u	10m	106	Diffused	Rectangular	2.8	20m	60m	20m	600n	5A		A	PD1224
103	LTL3291A	400u	10m	124	Diffused	Rectangular	2.8	20m	100m	30m	635n	5A		A	PD1220
104	LTL3293A	400u	10m	130	Diffused	Rectangular	2.8	20m	100m	30m	635n	5A		A	PD1221
105	LTL3297A	400u	10m	120	Diffused	Rectangular	2.8	20m	100m	30m	635n	5A		A	PD1223
106	LTL23221AL	400u	10m	130	Diffused	Rectangular	2.8	20m	100m	30m	635n	5A		A	PD1232
107	LTL23291AL	400u	10m	130	Diffused	Rectangular	2.8	20m	100m	30m	635n	5A		A	PD1232
108	LTL23293A	400u	10m	140		Rectangular	2.8	20m	100m	30m	635n	5A		A	PD1364
109	SY461D(A)	400u	10m			Rectangular	2.5	10m	100m	40m	590n	4A%		A	PD1032
110	TLSO3600	400u	10m	100	Diffused	Rectangular	3.0	10m	100m	30m	630n	5A%			PD1194

SYMBOLS AND CODES EXPLAINED IN INTERPRETER

2. LED LAMPS - Orange/Amber (Cont'd)

IN ORDER OF COLOR AND: (1) INTENSITY (2) IF TEST (3) BEAM ANGLE & (4) TYPE No.

LINE No.	4 TYPE NUMBER	1 LUMINOUS INTENSITY MIN (cd)	2 IF TEST (A)	3 BEAM ANGLE θ HI (°)	LENS TYPE	LAMP STYLE	VF MAX (V)	IF TEST (A)	PD RATED MAX (W)	IF RATED MAX (A)	PEAK WAVE-LENGTH λP (m)	TEMP. RANGE CODE - +	FEATURES	LEAD CODE	OUTLINE DRAWING
1	TLSO5600	400u	10m	100	Diffused	Rectangular	3.0	10m	100m	30m	630n	5A%		A	PD1005a
2	TLSO5700	400u	10m	100	Diffused	Rectangular	3.0	10m	100m	30m	630n	5A%		A	PD1006
3	LTL9222A	400u	10m	100		Square	2.8	20m	100m	30m	635n	5A		♦	PD1366
4	LTL9273A	400u	10m	150	Diffused	Square	2.8	20m	60m	20m	600n	5A		A	PD1227
5	LTL9292A	400u	10m	100		Square	2.8	20m	100m	30m	635n	5A		♦	PD1366
6	TLO124	400u	10m	40	Diffused	T-1	2.8	20m	70m	25m	610n	27		A	PD279c Ø
7	LTL8222A	400u	10m	100	Diffused	Triangular	2.8	20m	100m	30m	635n	5A		A	PD1226
8	TLSO5500	400u	10m	100	Diffused	Triangular	3.0	10m	100m	30m	630n	5A%			PD631
9	TLO114A	400u	15m	80	Diffused	T-1 3/4	2.8	20m	100m	25m	610n	27		A	PD422a Ø
10	LA7041	400u	20m		Diffused		2.0	10m			635n			A	PD1267
11	LA7141	400u	20m		Diffused		2.0	10m			635n			A	PD1268
12	LA7241	400u	20m		Diffused		2.0	10m			635n			A	PD1269
13	LA7441	400u	20m		Diffused		2.0	10m			635n			A	PD1270
14	LA7541	400u	20m		Diffused		2.0	10m			635n			A	PD1271
15	LA7641D	400u	20m		Diffused		2.0	10m			635n			A	PD1272
16	AND1230	.50m	10m		Water-clear		2.8	20m	70m	25m	610n	5A		A	PD478
17	LTL5229	500u	10m	150	Diffused		2.8	20m	100m	30m	635n	5A		♦	PD1213a
18	LTL5299	500u	10m	150	Diffused		2.8	20m	100m	30m	635n	5A		♦	PD1213a
19	MT230O	500u	10m	75	Transparent		2.8	20m	70m	25m	610n	27		♦	PD478
20	MT240O	500u	10m	75	Diffused		2.8	20m	70m	25m	610n	27		♦	PD478
21	SY406D	500u	10m				2.5	10m	100m	40m	590n	4A%		A	PD1242
22	TLO211	0.5m	10m		Diffused		2.8	20m	70m	25m	610n	27		♦	PD1103 ⊠
23	LTL9223A	500u	10m	150	Diffused	Square	2.8	20m	100m	30m	635n	5A		A	PD1227
24	LTL9293A	500u	10m	150	Diffused	Square	2.8	20m	100m	30m	635n	5A		A	PD1227
25	TLO123	500u	10m	40	Water-clear	T-1	2.8	20m	70m	25m	610n	27		A	PD279c Ø
26	LST4153F	500u	10m	80	Diffused	T-1 3/4	2.8	20m	120m	40m	635n	5A		A	PD16ag
27	LTL8292A	500u	10m	100	Diffused	Triangular	2.8	20m	100m	30m	635n	5A		A	PD1226
28	TLO205	0.5m	15m		Diffused		2.8	20m	70m	25m	610n	27		♦	PD540a ⊠
29	TLO208	0.5m	15m		Diffused		2.8	20m	70m	25m	610n	27		♦	PD540 ⊠
30	TLO113A	500u	15m	50	Water-clear	T-1 3/4	2.8	20m	100m	25m	610n	27		A	PD422a Ø
31	LA2041	500u	20m	40	Diffused		2.0	10m			635n			A	PD1252
32	LA2441	500u	20m		Diffused		2.0	10m			635n			A	PD1253
33	LA6041	500u	20m		Diffused		2.0	10m			635n			A	PD1258
34	LA6141	500u	20m		Diffused		2.0	10m			635n			A	PD1259
35	LA6241	500u	20m		Diffused		2.0	10m			635n			A	PD1260
36	LA6341	500u	20m		Diffused		2.0	10m			635n			A	PD1261
37	LA6441	500u	20m		Diffused		2.0	10m			635n			A	PD1262
38	LA6541D	500u	20m		Diffused		2.0	10m			635n			A	PD1263
39	LA6641	500u	20m		Diffused		2.0	10m			635n			A	PD1264
40	LA6741	500u	20m		Diffused		2.0	10m			635n			A	PD1265
41	LA6841	500u	20m		Diffused		2.0	10m			635n			A	PD1266
42	LA8541	500u	20m		Diffused		2.0	10m			635n			A	PD1273
43	LA9041	500u	20m		Diffused		2.0	10m			635n			A	PD1274
44	TLO102A	0.6m	15m	180	Diffused		2.8	20m	70m	30m	610n	27		♦	PD1102 Ø
45	LA2841	600u	20m		Diffused		2.0	10m			635n			A	PD1254
46	LA3041	600u	20m	60	Diffused		2.0	10m			635n			A	PD1247
47	LA3641	600u	20m	90	Diffused		2.0	10m			635n			A	PD1247b
48	LA3741D	600u	20m		Diffused		2.0	10m			635n			A	PD1256
49	LA4041	600u	20m	60	Diffused		2.0	10m			635n			A	PD1247c
50	LA4241	600u	20m	60	Diffused		2.0	10m			635n			A	PD1247d
51	LA5041	600u	20m	45	Diffused		2.0	10m			635n			A	PD1248
52	LA5714	600u	20m	180	Diffused		2.0	10m			635n				PD1250
53	LA5741	600u	20m	60	Diffused		2.0	10m			635n			A	PD1250
54	LA5841	600u	20m		Diffused		2.0	10m			635n			A	PD1257
55	LA30041	600u	20m	90	Diffused		2.0	10m			635n			A	PD1247
56	LA40041	600u	20m	90	Diffused		2.0	10m			635n			A	PD1247c
57	LA42041	600u	20m	90	Diffused		2.0	10m			635n			A	PD1247d
58	LA50141	600u	20m	120	Diffused		2.0	10m			635n			A	PD1248
59	LA57041	600u	20m	90	Diffused		2.0	10m			635n				PD1250
60	LAH3103	600u	20m	80	Diffused		2.0	10m			635n			A	PD1279
61	LS3369EO	630u	2.0m	60	Diffused	T-1	2.5	2.0m	20m	7.5m	635n	5A%	IC Compatible	A	PD279c Ø
62	LS5469EO	630u	2.0m	50	Diffused	T-1 3/4	2.5	2.0m	20m	7.5m	635n	5A%	IC Compatible	A ♦	PD16ah Ø
63	TLPO5600(A)	630u	10m	80	Diffused		3.0	20m	100m	30m	630n	XA§	Side		PD1183
64	TLSO3200	630u	10m	100	Diffused	Cylindrical	3.0	10m	100m	30m	630n	5A%			PD1191
65	TLSO3701	630u	10m	100	Diffused	Cylindrical	3.0	10m	100m	30m	630n	5A%			PD1195
66	TLSO3300	630u	10m	100	Diffused	Rectangular	3.0	20m	100m	30m	630n	5A%			PD1192
67	TLSO3601	630u	10m	100	Diffused	Rectangular	3.0	10m	100m	30m	630n	5A%			PD1194
68	TLSO5100	630u	10m	100	Diffused	Rectangular	3.0	20m	100m	30m	630n	5A%			PD627
69	TLSO5300	630u	10m	100	Diffused	Rectangular	3.0	20m	100m	30m	630n	5A%			PD629
70	TLSO5601	630u	10m	100	Diffused	Rectangular	3.0	10m	100m	30m	630n	5A%		A	PD1005a
71	TLSO5701	630u	10m	100	Diffused	Rectangular	3.0	10m	100m	30m	630n	5A%		A	PD1006
72	TLSO5200	630u	10m	100	Diffused	T-1 3/4	3.0	10m	100m	30m	630n	5A%			PD628
73	TLSO3400	630u	10m	100	Diffused	Triangular	3.0	10m	100m	30m	630n	5A%			PD1193
74	TLSO5400	630u	10m	100	Diffused	Triangular	3.0	10m	100m	30m	630n	5A%			PD630
75	TLSO5501	630u	10m	100	Diffused	Triangular	3.0	10m	100m	30m	630n	5A%			PD631
76	LTL239	700u	10m	72	Diffused		2.8	20m	100m	30m	565n	5A		♦	PD1210c
77	LTL299	700u	10m	72	Diffused		2.8	20m	100m	30m	635n	5A		♦	PD1210c
78	LTL709E	700u	10m	38	Diffused		2.8	20m	100m	30m	635n	5A	mini	A	PD1286
79	SY440D	700u	10m				2.4	10m	100m	40m	590n	4A%		A	PD1244
80	LTL6223LN	700u	10m	70		Arch	2.8	20m	100m	30m	635n	5A	Flat	A	PD1225
81	LTL6293LN	700u	10m	70		Arch	2.8	20m	100m	30m	635n	5A	Flat	A	PD1225
82	LTL4221	700u	10m	40	Diffused	T-1	2.8	20m	100m	30m	635n	5A		♦	PD1212
83	O32	.7m	20m				2.5	20m			625n				PD1019
84	MT850-5VO	800u	5.0m	80	Diffused		20	5.0m	70m	7.5m	610n	27	w/resistor for 5V	A	PD1162
85	MT140HLO	800u	15m	80	Diffused		2.8	20m	70m	25m	610n	27	Wire-Wrap Leads		PD258b
86	MT140O	800u	15m	80	Diffused		2.8	20m	100m	25m	610n	27		A	PD1162
87	MT140SLO	800u	15m	80	Diffused		2.8	20m	100m	25m	610n	27			PD258c
88	MT610O	800u	15m	120	Transparent		2.8	20m	70m	25m	610n	27	Concave	A	PD1348
89	MO31C	800u	20m	40	Water-clear		3.0	20m	60m	35m	635n	5A		A	None
90	MO31D	800u	20m	45	Diffused		3.0	20m	60m	35m	635n	5A		A	None
91	MO31W	800u	20m	45	Milk-white		3.0	20m	60m	35m	635n	5A			None
92	MO51C	800u	20m	50	Water-clear		3.0	20m	105m	35m	635n	5A			None
93	MO51D	800u	20m	65	Diffused		3.0	20m	105m	35m	635n	5A			None
94	MO51T	800u	20m	50	Transparent		3.0	20m	105m	35m	635n	5A		A	None
95	MO51W	800u	20m	65	Milk-white		3.0	20m	105m	35m	635n	5A			None
96	MOB51C	800u	20m	20	Water-clear		3.0	20m	105m	35m	635n	5A			None
97	MOB51T	800u	20m	20	Transparent		3.0	20m	105m	35m	635n	5A			None
98	MOB51W	800u	20m	40	Milk-white		3.0	20m	105m	35m	635n	5A			None
99	LED3541	0.8m	20m	100	Diffused	Rectangular	3.0	20m	120m	30m	635n	5A			PD262g
100	MOB51D	800u	20m	40	Diffused	T-1 3/4	3.0	20m	105m	35m	635n	5A		B	PD16j
101	MOB52D	800u	20m	40		T-1 3/4	3.0	20m			635n				PD258a
102	SEL1910D	900u	10m	100	Diffused	T-1 3/4	2.5	10m	90m	30m	587n	3A		A	PD16n
103	LA50241	900u	20m	15	Diffused		2.0	10m			635n			A	PD1248
104	LA50341	900u	20m	30	Diffused		2.0	10m			635n			A	PD1248
105	LS3369FO	1.0m	2.0m	60	Diffused	T-1	2.5	2.0m	20m	7.5m	635n	5A%	IC Compatible	A	PD279c Ø
106	LS5469FO	1.0m	2.0m	50	Diffused	T-1 3/4	2.5	2.0m	20m	7.5m	635n	5A%	IC Compatible	A ♦	PD16ah Ø
107	MT860-5VO	1.0m	5.0m	50	Transparent		20	5.0m	70m	7.5m	610n	27	w/resistor for 5V	A	PD1162
108	LTL5223	1.0m	10m	64	Diffused		2.8	20m	100m	30m	635n	5A		♦	PD1361
109	TLUO2400	1.0m	10m	40	Diffused		3.0	10m	100m	30m	630n	5A%	Stackable	A	PD394a
110	TLAO5400	1.0m	10m	50	Diffused	Arch	3.0	20m	100m		630n	5A%	Stackable		PD1189

SYMBOLS AND CODES EXPLAINED IN INTERPRETER

2. LED LAMPS - Orange/Amber (Cont'd)

IN ORDER OF COLOR AND: (1) INTENSITY (2) IF TEST (3) BEAM ANGLE & (4) TYPE No.

LINE No.	4 TYPE NUMBER	1 LUMINOUS INTENSITY MIN (cd)	2 IF TEST (A)	3 BEAM ANGLE θ HI (°)	LENS TYPE	LAMP STYLE	VF MAX (V)	IF TEST (A)	PD RATED MAX (W)	IF RATED MAX (A)	PEAK WAVE-LENGTH λP (m)	TEMP. RANGE CODE - +	FEATURES	LEAD CODE	OUTLINE DRAWING
1	SY463D(A)	1m	10m			Rectangular	2.5	10m	100m	40m	590n	4A		A	PD1033
2	HLMP-K400	1.0m	10m	60	Diffused	T-1	3.0	10m	135m	30m	612n	5A		B	PD77m
3	LTL4291	1.0m	10m	40	Diffused	T-1	2.8	20m	100m	30m	635n	5A		♦	PD1212
4	MV51640	1.0m	10m	90		T-1	3.0	10n	120m	30m	635n	5A		B	PD77m
5	TLUO4400	1.0m	10m	60	Diffused	T-1	3.0	20m	100m	50m	630n	5A%	DC/Pulse Op		PD1190
6	LTL293	1.0m	10m	54	Diffused	T-1 3/4	2.8	20m	100m	30m	635n	5A		♦	PD1211
7	TLUO5400	1.0m	10m	60	Diffused	T-1 3/4	3.0	10m	100m	30m	630n	5A%		A	PD280k
8	TLUO6400	1.0m	10m	60	Diffused	T-1 3/4	3.0	10m	100m	30m	635n	5A%		A	PD284e
9	HLMP-Q400	1.0m	10m	90	Diffused	T-3/4	3.0	10m	135m	30m	612n	5A		A	PD180a
10	MT130HLO	1.0m	15m	50	Transparent		2.8	20m	70m	25m	610n	27	Wire-Wrap Leads		PD258b
11	MT130O	1.0m	15m	50	Transparent		2.8	20m	100m	25m	610n	27		A	PD1162
12	MT130SLO	1.0m	15m	50	Transparent		2.8	20m	100m	25m	610n	27			PD258c
13	TLO108A	1.0m	15m	110	Transparent		2.8	20m	85m	30m	610n	27		♦	PD1102 Ø
14	LA5041D	1.0m	20m	24	Diffused		2.0	10m			635n			A	PD1247E
15	LA5541D	1.0m	20m	50	Diffused		2.0	10m			635n			A	PD1249
16	LA5741D	1.0m	20m	40	Diffused		2.0	10m			635n			A	PD1251
17	LA8941D	1.0m	20m		Diffused		2.0	10m			635n			A	PD1255
18	LN416YP	1.0m†	20m		Diffused		2.2	20m	90m	30m	590n	28		A	PD439a
19	MO61D	1.0m	20m		Diffused		3.0	20m			630n				PD525
20	MO71D	1.0m	20m		Diffused		3.0	20m			630n				PD490a
21	OPL722	1.0m	20m	80			3.0	20m	120m	40m	635n	5A		A	PD257d
22	MO21D	1.0m	20m		Diffused	Cylindrical	3.0	20m			630n				PD333a
23	MO62D	1.0m	20m		Diffused	Rectangular	3.0	20m			630n				PD484b
24	LTL33221AA	1.0m	20m	100		Square	2.8	20m	100m	30m	635n	5A		♦	PD1233a
25	OPL509	1.0m	20m	150		T-1	3.0	20m	100m	50m	610n	5A			PD16ae
26	CMD51640	1.0m	20m	90	Diffused	T-1 1/2	3.0	20m	120m	30m	635n	5A		B	PD1150
27	LST722	1.0m	20m	80		T-1 3/4	3.0	20m	120m	40m	635n	5A		A	PD16ag
28	MO81D	1.0m	20m		Diffused	T-1 3/4	3.0	20m			630n				PD562
29	LTL709EA	1.1m	10m	38	Diffused		2.8	20m	100m	30m	635n	5A	mini	A	PD1286
30	LTL294	1.1m	10m	32	Transparent	T-1 3/4	2.8	20m	100m	30m	635n	5A		♦	PD1211
31	MT620O	1.2m	10m	90	Transparent		2.8	20m	70m	25m	610n	27	For Backlighting	A	PD1350
32	SEL2910D	1.2m	10m	100	Diffused	T-1	2.5	10m	90m	30m	587n	3A		A	PD322
33	LN444YP	1.2m†	20m		Diffused		2.2	20m	90m	30m	590n	28		A	PD361g
34	LTL907EK	1.2m	20m	140	Water-clear		2.8	20m	100m	30m	635n	2A	Mini	J	PD1140
35	LTL907JK	1.2m	20m	160	Water-clear		2.8	20m	100m	30m	635n	5A	Mini	D	PD1140
36	MOB71D	1.2m	20m		Diffused		3.0	20m			630n				PD490b
37	MOB61D	1.2m	20m		Diffused	Rectangular	3.0	20m			630n				PD262k
38	SAA5551REC	1.2m	20m		Diffused	Rectangular	2.5	20m	125m	50m	605n	38			PD1376
39	SAA5552REC	1.2m	20m		Diffused	Rectangular	2.5	20m	125m	50m	605n	38			PD1377
40	SAA7851REC	1.2m	20m		Diffused	Rectangular	2.5	20m	125m	50m	605n	38			PD1379 Ø
41	MOB81D	1.2m	20m		Diffused	T-1 1/2	3.0	20m			630n				PD982
42	SAA2201	1.2m	20m		Water-clear	T-5/8	2.5	20m	100m	40m	605n	38		B	PD1110
43	SAA5552TRI	1.2m	20m		Diffused	Triangular	2.5	20m	125m	50m	605n	38			PD1111
44	LED1643	1.3m			Water-clear	Rectangular	2.5	10m	180m	50m	635n	28		A	PD907
45	LED1644	1.3m			Water-clear	Rectangular	2.5	10m	180m	50m	635n	28		A	PD907
46	OPL57	1.3m	10m		Diffused		2.5	10m	180m	50m	635n	28			PD257g
47	OPL57-1	1.3m	10m				2.5	10m	180m	50m	635n	28			PD257g
48	OPL57-2	1.3m	10m		Diffused		2.5	10m	180m	50m	635n	28			PD257g
49	OPL57-3	1.3m	10m		Water-clear		2.5	10m	180m	50m	635n	28			PD257g
50	LED1241	1.3m	10m		Diffused	Cylindrical	2.5	10m	180m	50m	635n	28		A	PD903
51	LED1242	1.3m	10m		Diffused	Cylindrical	2.5	10m	180m	50m	635n	28		A	PD903
52	LED1243	1.3m	10m		Water-clear	Cylindrical	2.5	10m	180m	50m	635n	28		A	PD903
53	LED1244	1.3m	10m		Water-clear	Cylindrical	2.5	10m	180m	50m	635n	28		A	PD903
54	LED1341	1.3m	10m		Diffused	Cylindrical	2.5	10m	180m	50m	635n	28		A	PD904
55	LED1342	1.3m	10m		Diffused	Cylindrical	2.5	10m	180m	50m	635n	28		A	PD904
56	LED1343	1.3m	10m		Water-clear	Cylindrical	2.5	10m	180m	50m	635n	28		A	PD904
57	LED1344	1.3m	10m		Water-clear	Cylindrical	2.5	10m	180m	50m	635n	28		A	PD904
58	LTL1222A	1.3m†	10m		Diffused	Cylindrical	2.8	20m			635n			A	PD1217
59	LTL1292A	1.3m†	10m		Diffused	Cylindrical	2.8	20m			635n			A	PD1217
60	LED1042	1.3m	10m		Diffused	Rectangular	2.5	10m	180m	50m	635n	28		A	PD909a
61	LED1043	1.3m	10m		Water-clear	Rectangular	2.5	10m	180m	50m	635n	28		A	PD909a
62	LED1044	1.3m	10m		Water-clear	Rectangular	2.5	10m	180m	50m	635n	28		A	PD909a
63	LED1441	1.3m	10m		Diffused	Rectangular	2.5	10m	180m	50m	635n	28		A	PD905
64	LED1442	1.3m	10m		Diffused	Rectangular	2.5	10m	180m	50m	635n	28		A	PD905
65	LED1443	1.3m	10m		Water-clear	Rectangular	2.5	10m	180m	50m	635n	28		A	PD905
66	LED1444	1.3m	10m		Water-clear	Rectangular	2.5	10m	180m	50m	635n	28		A	PD905
67	LED1641	1.3m	10m		Diffused	Rectangular	2.5	10m	180m	50m	635n	28		A	PD907
68	LED2141	1.3m	10m		Diffused	Rectangular	2.5	10m	180m	50m	635n	28		A	PD909b
69	LED2142	1.3m	10m		Diffused	Rectangular	2.5	10m	180m	50m	635n	28		A	PD909b
70	LED2143	1.3m	10m		Water-clear	Rectangular	2.5	10m	180m	50m	635n	28		A	PD909b
71	LED2144	1.3m	10m		Water-clear	Rectangular	2.5	10m	180m	50m	635n	28		A	PD909b
72	LED1941	1.3m	10m		Diffused	Square	2.5	10m	180m	50m	635n	28		A	PD908
73	LED1942	1.3m	10m		Diffused	Square	2.5	10m	180m	50m	635n	28		A	PD908
74	LED1943	1.3m	10m		Water-clear	Square	2.5	10m	180m	50m	635n	28		A	PD908
75	LED1944	1.3m	10m		Water-clear	Square	2.5	10m	180m	50m	635n	28		A	PD908
76	LED1841	1.3m	10m		Diffused	T-1 3/4	2.5	10m	180m	50m	635n	28			PD16a
77	LED1842	1.3m	10m		Diffused	T-1 3/4	2.5	10m	180m	50m	635n	28			PD16a
78	LED1843	1.3m	10m		Water-clear	T-1 3/4	2.5	10m	180m	50m	635n	28			PD16a
79	LED1844	1.3m	10m			T-1 3/4	2.5	10m	180m	50m	635n	28			PD16a
80	SDL57L1	1.3m	10m			T-1 3/4	2.5	10m	180m	50m	635n	28			PD16af
81	SDL57L2	1.3m	10m		Diffused	T-1 3/4	2.5	10m	180m	50m	635n	28			PD16af
82	SDL57L3	1.3m	10m		Water-clear	T-1 3/4	2.5	10m	180m	50m	635n	28			PD16af
83	LED1141	1.3m	10m		Diffused	Triangular	2.5	10m	180m	50m	635n	28		A	PD902
84	LED1142	1.3m	10m		Diffused	Triangular	2.5	10m	180m	50m	635n	28		A	PD902
85	LED1143	1.3m	10m		Water-clear	Triangular	2.5	10m	180m	50m	635n	28		A	PD902
86	LED1144	1.3m	10m		Water-clear	Triangular	2.5	10m	180m	50m	635n	28		A	PD902
87	LED1541	1.3m	10m		Diffused	Triangular	2.5	10m	180m	50m	635n	28		A	PD906
88	LED1542	1.3m	10m		Diffused	Triangular	2.5	10m	180m	50m	635n	28		A	PD906
89	LED1543	1.3m	10m		Water-clear	Triangular	2.5	10m	180m	50m	635n	28		A	PD906
90	LED1544	1.3m	10m		Water-clear	Triangular	2.5	10m	180m	50m	635n	28		A	PD906
91	LA50441	1.3m	20m	24	Diffused		2.0	10m			635n			A	PD1247e
92	LA50541	1.3m	20m	15	Diffused		2.0	10m			635n			A	PD1247e
93	SEL2910A	1.4m	10m	40	Water-clear		2.5	1.0m	90m	30m	587n	3A		A	None
94	LTL13279A	1.5m†	10m		Diffused	Rectangular	2.8	20m			600n			A	PD1231
95	SY462D(A)	1.5m	10m			Rectangular	2.5	10m	100m	40m	590n	4A		A	PD1033
96	MV51641	1.5m	10m	90		T-1	3.0	10m	120m	30m	635n	5A		B	PD77m
97	LTL4223	1.5m	10m	36	Diffused	T-1 3/4	2.8	20m	100m	30m	635n	5A		♦	PD1211
98	LTL5123	1.5m	10m	65	Diffused	T-1 3/4	2.8	20m	100m	30m	635n	5A		♦	PD1211
99	LTL5193	1.5m	10m	65	Diffused	T-1 3/4	2.8	20m	100m	30m	635n	5A		♦	PD1211
100	TLO251	1.5m	15m				2.8	20m	140m	25m	610n	37		A	None
101	TLO250	1.5m	20m				2.8	30m	85m	30m	610n	37		A	PD493
102	AA3665S	1.5m	20m		Transparent	Cylindrical	2.5	20m	125m	50m	605n	38	Lens:Pale Orange		PD1395
103	SAA4652REC	1.5m	20m		Diffused	Rectangular	2.5	20m	125m	50m	605n	38			PD1375
104	AND740O	1.5m†	20m		Transparent	T-1	3.0	20m	120m	20m	600n	48			PD257b Ø
105	AND743A	1.5m†	20m		Water-clear	T-1	3.0	20m	120m	20m	590n	48			PD257b Ø
106	AND743O	1.5m†	20m		Water-clear	T-1	3.0	20m	120m	20m	600n	48			PD257b Ø
107	AND744A	1.5m†	20m		Diffused	T-1	3.0	20m	120m	20m	590n	48			PD257b Ø
108	AND744O	1.5m†	20m		Diffused	T-1	3.0	20m	120m	20m	600n	48			PD257b Ø
109	AND746A	1.5m†	20m		Milk-white	T-1	3.0	20m	120m	20m	590n	48			PD257b Ø
110	AND746O	1.5m†	20m		Milk-white	T-1	3.0	20m	120m	20m	600n	48			PD257b Ø

SYMBOLS AND CODES EXPLAINED IN INTERPRETER

2. LED LAMPS - Orange/Amber (Cont'd)

IN ORDER OF COLOR AND: (1) INTENSITY (2) IF TEST (3) BEAM ANGLE & (4) TYPE No.

LINE No.	4 TYPE NUMBER	1 LUMINOUS INTENSITY MIN (cd)	2 IF TEST (A)	3 BEAM ANGLE θ HI (°)	LENS TYPE	LAMP STYLE	VF MAX (V)	IF TEST (A)	PD RATED MAX (W)	IF RATED MAX (A)	PEAK WAVE-LENGTH λP (m)	TEMP. RANGE CODE - +	FEATURES	LEAD CODE	OUTLINE DRAWING
1	LT4272AT	1.5m	20m		Transparent	T-1	2.8	20m	105m	30m	600n	48			PD16w Ø
2	CMD51641	1.5m	20m	90	Diffused	T-1 1/2	3.0	20m	120m	30m	635n	5A		B	PD1150
3	AND750A	1.5m†	20m		Transparent	T-1 3/4	3.0	20m	120m	20m	590n	48		A	PD16y Ø
4	AND750O	1.5m†	20m		Transparent	T-1 3/4	3.0	20m	120m	20m	600n	48		A	PD16y Ø
5	AND753A	1.5m†	20m		Water-clear	T-1 3/4	3.0	20m	120m	20m	590n	48		A	PD16y Ø
6	AND753O	1.5m†	20m		Water-clear	T-1 3/4	3.0	20m	120m	20m	600n	48		A	PD16y Ø
7	AND754A	1.5m†	20m		Diffused	T-1 3/4	3.0	20m	120m	20m	590n	48		A	PD16y Ø
8	AND754O	1.5m†	20m		Diffused	T-1 3/4	3.0	20m	120m	20m	600n	48		A	PD16y Ø
9	AND756A	1.5m†	20m		Milk-white	T-1 3/4	3.0	20m	120m	20m	590n	48		A	PD16y Ø
10	TLAO5402	1.6m	10m	50	Diffused	Arch	3.0	20m	100m		630n	5A%	Stackable		PD1189
11	TLSO3201	1.6m	10m	100	Diffused	Cylindrical	3.0	10m	100m	30m	630n	5A%			PD1191
12	LTL9294A	1.6m†	10m		Diffused	Rectangular	2.8	20m			635n			A	PD1228
13	TLSO3301	1.6m	10m	100	Diffused	Rectangular	3.0	20m	100m	30m	630n	5A%			PD1192
14	TLSO5101	1.6m	10m	100	Diffused	Rectangular	3.0	20m	100m	30m	630n	5A%			PD627
15	TLSO5301	1.6m	10m	100	Diffused	Rectangular	3.0	20m	100m	30m	630n	5A%			PD629
16	TLSO5201	1.6m	10m	100	Diffused	T-1 3/4	3.0	20m	100m	30m	630n	5A%			PD628
17	TLSO3401	1.6m	10m	100	Diffused	Triangular	3.0	10m	100m	30m	630n	5A%			PD1193
18	TLSO5401	1.6m	10m	100	Diffused	Triangular	3.0	10m	100m	30m	630n	5A%			PD630
19	MT263O	1.6m	15m	130	Transparent		2.8	20m	70m	25m	610n	27	For Backlighting	A	PD1349
20	LDH5601	1.6m	20m	100	Diffused	Cylindrical	2.0	20m	200m	60m	645n	5A%	Tr/Tf 100ns Typ	♦	PD932 Ø
21	LDH3601	1.6m	20m	100	Diffused	Rectangular	2.0	20m	200m	60m	645n	5A%	T-1 3/4 Size	♦	PD530 ⊘
22	LTL5224	1.7m	10m	44	Transparent		2.8	20m	100m	30m	635n	5A		♦	PD1361
23	LTL10293W	1.7m	10m	60	Diffused		2.8	20m	100m	30m	635n	5A		A	PD1214
24	LTL10223	1.7m	10m	60	Diffused	T-1 3/4	2.8	20m	100m	30m	635n	5A		A	PD1210b
25	SEL1910A	1.8m	10m	40	Water-clear	T-1 3/4	2.5	10m	90m	30m	587n	3A		A	PD16n
26	LDH2310	1.8m†	20m	140	Water-clear	Rectangular	3.0	20m	200m	30m	645n	5A%	Surface Mount LED	J	PD1140
27	LTL10213W	2.0m†	10m		Diffused		2.8	20m			635n			A	PD1214
28	SY403DA	2.0m	10m	35	Diffused		2.5	10m	100m	40m	590n	4A%		A	PD1239b
29	SY406T	2.0m	10m		Transparent		2.5	20m	100m	40m	590n	38%		A	PD256
30	4140-1SERIES	2.0m†	10m			Panel-mount	2.2	10m		20m		5A	Built-In Resistor		PD1039a
31	4140-5SERIES	2.0m†	10m			Panel-mount	2.2	10m		20m		5A	Built-In Resistor		PD1039a
32	HLMP-K401	2.0m	10m	60	Diffused	T-1	3.0	10m	135m	30m	612n	5A		B	PD77m
33	SY403DA(3)(A)	2m	10m			T-1 1/2	2.5	10m		40m	590n	4A%		A	PD280j
34	LDH5021	2.0m	10m	70	Diffused	T-1 3/4	3.0	20m	200m	60m	645n	5A%	Tr/Tf 100ns Typ	A	PD28p Ø
35	LDH5121	2.0m	10m	70	Diffused	T-1 3/4	2.0	20m	200m	60m	645n	5A%	Tr/Tf 100ns Typ	B	PD16ak Ø
36	MV57154	2.0m	10m	80	Diffused	T-1 3/4	3.0	10m	105m	35m	630n	5A		B	PD47a Ø
37	L311DA	2.0m	20m	60	Diffused		3.0	10m	120m	30m	605n	5A			PD77q
38	LN442YP	2m†	20m		Diffused		2.2	20m	90m	30m	590n	28		A	PD489a
39	OPL74	2.0m	20m	80			3.0	20m	100m	50m	600n	5A			PD257f
40	SAA5531REC	2.0m	20m		Diffused		2.5	20m	125m	50m	605n	38		A	PD489c
41	SY404D	2.0m†	20m		Diffused		2.5	20m	100m	40m	590n	X8§		A §	PD12t Ø
42	SY405D	2.0m†	20m	20	Diffused		2.5	20m	100m	40m	590n	X8§		A	PD285 Ø
43	LN430YPP	2m†	20m		Diffused	Rectangular	2.2	20m	90m	30m	590n	28		A	PD439
44	LN442YPH	2m†	20m		Diffused	Rectangular	2.2	20m	90m	30m	590n	28		A	PD913
45	LN445YP	2m†	20m		Diffused	Rectangular	2.2	20m	90m	30m	590n	28		A	PD361f
46	SAA4632REC	2.0m	20m		Diffused	Rectangular	2.5	20m	125m	50m	605n	38			PD909c
47	SAA5532REC	2.0m	20m		Diffused	Rectangular	2.5	20m	125m	50m	605n	38			PD909c
48	ORL722L	2.0m	20m	40		Side-mount	3.0	20m	120m	35m	635n	5A			PD507 Ø
49	LLL57	2.0m	20m	30		T-1	3.2	20m	150m	40m	610n	48			PD54
50	OPL570	2.0m	20m	80		T-1	3.0	20m	100m	50m	610n	5A			PD16ae
51	LST722L	2.0m	20m	40		T-1 3/4	3.0	20m	120m	40m	635n	5A		A	PD18a
52	TLBO5400	2.0m	20m	80	Diffused	T-1 3/4			200m	30m	660n	47	Blink/Continuous		PD1000
53	TLBO5410	2.0m	20m	80	Diffused	T-1 3/4			200m	30m	660n	47	Blinking Freq 3Hz		PD1205
54	SAA5532TRI	2.0m	20m		Diffused	Triangular	2.5	20m	125m	50m	605n	38		A	PD1111
55	HLMP-D400	2.1m	10m	75	Diffused	T-1 1/2	3.0	10m	135m	30m	612n	5A			PD940a
56	TLUO2401	2.5m	10m	40	Diffused		3.0	10m	100m	30m	630n	5A%	Stackable	A	PD394a
57	TLAO5401	2.5m	10m	50	Diffused	Arch	3.0	20m	100m	30m	630n	5A%	Stackable		PD1189
58	TLAO5403	2.5m	10m	50	Diffused	Arch	3.0	20m	100m		630n	5A%	Stackable		PD1189
59	LTL3227A	2.5m†	10m		Diffused	Rectangular	2.8	20m			635n			A	PD1223
60	LDH1111	2.5m	10m	70	Diffused	T-1	2.0	20m	200m	60m	645n	5A%	Tr/Tf 100ns Typ	B	PD16al Ø
61	LTL4222	2.5m	10m	20	Transparent	T-1	2.8	20m	100m	30m	635n	5A		♦	PD1212
62	MV51642	2.5m	10m	90		T-1	3.0	10m	120m	30m	635n	5A		B	PD77m
63	TLUO4401	2.5m	10m	60	Diffused	T-1	3.0	20m	100m	50m	630n	5A%	DC/Pulse Op		PD1190
64	LTL4293	2.5m	10m	36	Diffused	T-1 3/4	2.8	20m	100m	30m	635n	5A		♦	PD1211
65	TLUO5401	2.5m	10m	60	Diffused	T-1 3/4	3.0	10m	100m	30m	630n	5A%		A	PD280k
66	TLUO6401	2.5m	10m	60	Diffused	T-1 3/4	3.0	10m	100m	30m	635n	5A%		A	PD284e
67	LDH5602	2.5m	20m	100	Diffused	Cylindrical	2.0	20m	200m	60m	645n	5A%	Tr/Tf 100ns Typ	♦	PD932 Ø
68	LDH3602	2.5m	20m	100	Diffused	Rectangular	2.0	20m	200m	60m	645n	5A%	T-1 3/4 Size	♦	PD530 ⊘
69	SY441D	2.5m	20m		Diffused	Square	2.5	20m	100m	40m	590n	4A%	Max Vr 5V	A	PD1374
70	CMD51642	2.5m	20m	90	Diffused	T-1 1/2	3.0	20m	120m	30m	635n	5A		B	PD1150
71	LST4153	2.5m	20m	80	Diffused	T-1 3/4	3.0	20m	120m	40m	635n	5A		A	PD16ag
72	LST4153S	2.5m	20m	80		T-1 3/4	3.0	20m	120m	40m	610n	5A			PD16ag
73	LTL33221A	3.0m†	10m		Diffused		2.8	20m			635n			A	PD1233
74	LN0204YP4	3m†	10m		Diffused	Rectangular	2.2	20m	60m	20m	590n	28		A	PD1070
75	HLMP-K402	3.0m	10m	60	Diffused	T-1	3.0	10m	135m	30m	612n	5A		B	PD77m
76	L111DA	3.0m	20m	60	Diffused		3.0	20m	120m	30m	605n	5A		A	PD50t
77	L611DA	3.0m	20m	60	Diffused		3.0	20m	120m	30m	605n	5A	Stackable		PD1056a
78	L612DA	3.0m	20m	60	Diffused		3.0	20m	120m	30m	605n	5A	Stackable		PD1060
79	L615DA	3.0m	20m	60	Diffused		3.0	20m	120m	30m	605n	5A	Stackable		PD1057a
80	LA5043D	3.0m	20m	15	Water-clear		2.0	10m			635n			A	PD1247e
81	LA5543D	3.0m	20m	25	Water-clear		2.0	10m			635n			A	PD1249
82	LM611DA	3.0m	20m	60	Diffused		3.0	20m	120m	30m	605n	5A	Stackable		PD1056a
83	LN48YPL	3m†	20m		Diffused		2.2	20m	90m	30m	590n	28		A	PD1062a
84	LST5152R10	3.0m	20m	24			10	20m	120m	35m	635n	5A	Built-In Resistor		PD50r Ø
85	LST5153	3.0m	20m	65	Diffused		3.0	20m	120m	35m	635n	5A		A	PD50r Ø
86	LST5153R5	3.0m	20m	65			5	20m	120m	35m	635n	5A	Built-In Resistor		PD50r Ø
87	LST5153R10	3.0m	20m	65			10	20m	120m	35m	635n	5A	Built-In Resistor		PD50r Ø
88	LST5154	3.0m	20m	24	Diffused		3.0	20m	120m	35m	635n	5A		A	PD50r Ø
89	LST5154R5	3.0m	20m	24			5	20m	120m	35m	635n	5A	Built-In Resistor		PD50r Ø
90	LST5154R10	3.0m	20m	24			10	20m	120m	35m	635n	5A	Built-In Resistor		PD50r Ø
91	MV5177C	3.0m†	20m	180			3.0	20m	105m	35m	635n	5A		A	PD16c Ø
92	AA5562X	3.0m	20m			Cylindrical	2.5	20m	125m	50m	605n	38			PD1394
93	ORL5153	3.0m	20m	65		Side-mount	3.0	20m	120m	35m	635n	5A			PD507 Ø
94	ORL5154	3.0m	20m	24		Side-mount	3.0	20m	120m	35m	635n	5A			PD507 Ø
95	LN43SCP(H)	3m†	20m		Water-clear	T-1	2.2	20m	90m	30m	590n	28		A	PD1061
96	LN43SYP(H)	3m†	20m		Diffused	T-1	2.2	20m	90m	30m	590n	28		A	PD1061
97	LST4154	3.0m	20m	65	Diffused	T-1 3/4	3.0	20m	120m	40m	635n	5A		A	PD16ag
98	LST4154S	3.0m	20m	65		T-1 3/4	3.0	20m	120m	40m	610n	5A			PD16ag
99	LST5153S	3.0m	20m	65		T-1 3/4	3.0	20m	120m	35m	610n	5A			PD16ad
100	LST5154S	3.0m	20m	24		T-1 3/4	3.0	20m	120m	35m	610n	5A			PD16ad
101	MO52D	3.0m	20m		Diffused	T-1 3/4	3.0	20m			630n				PD258a
102	MO52DR	3.0m	20m		Diffused	T-1 3/4	3.0	20m			630n				PD258a
103	MO52W	3.0m	20m		Diffused	T-1 3/4	3.0	20m			630n				PD258a
104	MT550O	3.0m	20m	50	Transparent	T-1 3/4	5.4	20m	160m	30m	610n	27	2Chip	♦	PD1211
105	TLO253	3.4m	15m		Diffused		2.8	20m	70m	30m	610n	27		A	None
106	LTL221	3.5m†	10m		Diffused	T-1	2.8	20m			635n			A	PD1236
107	LTL291	3.5m†	10m		Diffused	T-1	2.8	20m			635n			A	PD1236
108	LTL4292	3.5m	10m	20	Transparent	T-1	2.8	20m	100m	30m	635n	5A		♦	PD1212
109	LTL4296	3.5m	10m	20	Water-clear	T-1	2.8	20m	100m	30m	635n	5A		♦	PD1212
110	LTL10224	3.7m	10m	34	Transparent	T-1 3/4	2.8	20m	100m	30m	635n	5A		A	PD1210b

SYMBOLS AND CODES EXPLAINED IN INTERPRETER

2. LED LAMPS - Orange/Amber (Cont'd)

IN ORDER OF COLOR AND: (1) INTENSITY (2) IF TEST (3) BEAM ANGLE & (4) TYPE No.

LINE No.	4 TYPE NUMBER	1 LUMINOUS INTENSITY MIN (cd)	2 IF TEST (A)	3 BEAM ANGLE θ HI (°)	LENS TYPE	LAMP STYLE	VF MAX (V)	IF TEST (A)	PD RATED MAX (W)	IF RATED MAX (A)	PEAK WAVE-LENGTH λP (m)	TEMP. RANGE CODE - +	FEATURES	LEAD CODE	OUTLINE DRAWING
1	MSL57	4.0m†		30	Diffused	T-1	2.4	20m		40m	610n				PD55 Ø
2	5152R5	4.0m†		28		T-1 3/4	5.0	20m		35m	635n		Built-In Resistor		PD379
3	LN831RP	4.0m†	20n		Diffused	Cylindrical	2.1	20m	90m	30n	630n	3A%			PD438
4	LDH1112	4.0m	10m	70	Diffused	T-1	2.0	20m	200m	60m	645n	5A%	Tr/Tf 100ns Typ	B	PD16al Ø
5	HLMP-D401	4.0m	10m	75	Diffused	T-1 1/2	3.0	10m	135m	30m	612n	5A			PD940a
6	SY413D(A)	4.0m	10m	36	Diffused	T-1 1/2	2.5	10m	100m	40m	590n	4A%		A	PD280c
7	LDH5022	4.0m	10m	70	Diffused	T-1 3/4	3.0	20m	200m	60m	645n	5A%	Tr/Tf 100ns Typ	A	PD28p Ø
8	LDH5122	4.0m	10m	70	Diffused	T-1 3/4	2.0	20m	200m	60m	645n	5A%	TR/Tf 100ns Typ	B	PD16ak Ø
9	LTL5124	4.0m	10m	40	Transparent	T-1 3/4	2.8	20m	100m	30m	635n	5A		♦	PD1211
10	LTL5194	4.0m	10m	40	Transparent	T-1 3/4	2.8	20m	100m	30m	635n	5A		♦	PD1211
11	LTL10293	4.0m†	10m		Diffused	T-1 3/4	2.8	20m			635n			A	PD1210b
12	MV57152	4.0m	10m	70	Water-clear	T-1 3/4	3.0	10m	105m	35m	630n	5A		B	PD47a Ø
13	LA10041	4.0m	20m		Diffused		2.0	10m			635n			A	PD1275
14	MV5153	4.0m†	20m	64	Diffused		3.0	20m	105m	35m	635n	5A		A	PD16p Ø
15	SY404T	4.0m†	20m				2.5	20m	100m	40m	590n	X8§		A §	PD12t Ø
16	SY405T	4.0m†	20m	16			2.5	20m	100m	40m	590n	X8§		A	PD285 Ø
17	LDH3603	4.0m	20m	100	Diffused	Rectangular	2.0	20m	200m	60m	645n	5A%	T-1 3/4 Size	♦	PD530 ⊠
18	LN447YP	4m†	20m		Diffused	T-3/4	2.2	20m	90m	30m	590n	28		A	PD914a
19	SY403TA	5m	10m	25	Transparent		2.5	10m	100m	40m	590n	4A%		A	PD1239b
20	MT640O	5m	10m	20	Diffused	T-1	2.8	20m	70m	25m	610n	27		♦	PD1203
21	SY403TA(3)(A)	5m	10m			T-1 1/2	2.5	10m		40m	590n	4A%		A	PD280j
22	MT221O	5.0m†	15m		Transparent	Rectangular	2.8	20m	70m	25m	610n	27			PD1356
23	MT440O	5.0m	15m	30	Diffused	T-1 3/4	2.8	20m	70m	25m	610n	27		♦	PD1199
24	LN01401C	5m†	20m		Water-clear		2.2	20m	60m	20m	590n	28		A	PD1069
25	MOC31D	5.0m	20m		Diffused		3.0	20m			630n				PD50ac
26	MV5174C	5.0m†	20m	90			3.0	20m	105m	35m	635n	5A		A	PD16c Ø
27	MO32D	5.0m	20m		Diffused	T-1	3.0	20m			630n				PD77h
28	5153R5	6.0m†		65		T-1 3/4	5.0	20m		35m	635n		Built-In Resistor		PD379
29	5153R10	6.0m†		65		T-1 3/4	10	20m		35m	635n		Built-In Resistor		PD379
30	LTL6223L	6.0m†	10m		Diffused	Arch	2.8	20m			635n			A	PD1225
31	LTL6293L	6.0m†	10m		Diffused	Arch	2.8	20m			635n			A	PD1225
32	LDH1113	6.0m	10m	70	Diffused	T-1	2.0	20m	200m	60m	645n	5A%	Tr/Tf 100ns Typ	B	PD16al Ø
33	LDH5023	6.0m	10m	70	Diffused	T-1 3/4	3.0	20m	200m	60m	645n	5A%	Tr/Tf 100ns Typ	A	PD28p Ø
34	LDH5123	6.0m	10m	70	Diffused	T-1 3/4	2.0	20m	200m	60m	645n	5A%	TR/Tf 100ns Typ	B	PD16ak Ø
35	LN48YPH	6m†	20m		Diffused		2.2	20m	90m	30m	590n	28		A	PD1062
36	LN49YCP	6m†	20m		Water-clear		2.2	20m	90m	30m	590n	28		A	PD322a
37	LST5153R	6.0m†	20m	65	Diffused		3.0 §	20m	120m	35m	635n	5A	Built-In Resistor		PD50r Ø
38	MOB52W	6.0m	20m		Diffused		3.0	20m			630n				PD50n
39	LN48YCP	6m†	20m		Water-clear	T-1	2.2	20m	90m	30m	590n	28		A	PD322
40	SAA3431	6.0m	20m		Diffused	T-1	2.5	20m	125m	50m	605n	38		A	PD33
41	L41-1SERIES	6.7m†	20m				2.2	10m		20m		5A	Built-In Resistor		PD1303a
42	5154R5	8.0m†		24		T-1 3/4	5.0	20m		35m	635n		Built-In Resistor		PD379
43	5154R10	8.0m†		24		T-1 3/4	10	20m		35m	635n		Built-In Resistor		PD379
44	L121DA	8.0m	20m	60	Diffused		2.5	20m	75m	35m	605n	38		A	PD50n
45	L621DA	8.0m	20m	60	Diffused		2.5	20m	75m	35m	605n	38	Stackable		PD1056a
46	L622DA	8.0m	20m	60	Diffused		2.5	20m	75m	35m	605n	38	Stackable		PD1060
47	L625DA	8.0m	20m	60	Diffused		2.5	20m	75m	35m	605n	38	Stackable		PD1057a
48	LN01801C	8m†	20m		Water-clear		2.1	20m	60m	20m	630n	28		A	PD1069
49	LST5154R	8.0m†	20m	24	Diffused		3.0 §	20m	120m	35m	635n	5A	Built-In Resistor		PD50r Ø
50	MO52C	8.0m	20m		Transparent	T-1 3/4	3.0	20m			630n				PD258a
51	MO52CR	8.0m	20m		Transparent	T-1 3/4	3.0	20m			630n				PD258a
52	MT540O	8.0m	20m	20	Diffused	T-1 3/4	2.8	20m	70m	25m	610n	27		♦	PD1202
53	MV5154	8.0m†	20m	24	Diffused	T-1 3/4	3.0	20m	105m	35m	635n	5A		A	PD16n Ø
54	SAA5531	8.0m	20m		Diffused	T-1 3/4	2.5	20m	125m	50m	605n	38		A	PD28b
55	SAA5633	8.0m	20m		Diffused	T-1 3/4	2.5	20m	125m	50m	605n	38		A	PD47b
56	TLBO5160	8.0m	20m	24	Water-clear	T-1 3/4			200m	30m	630n	47	Blinker LED		PD1000
57	LN88RPP	9m†	20m		Diffused	T-1	2.1	20m	90m	30m	630n	28		A	PD322
58	MO52T	9.0m	20m		Transparent	T-1 3/4	3.0	20m			630n				PD258a
59	SY415D	10m	10m	50	Diffused		2.5	10m	100m	40m	590n	4A%		A	PD257g
60	MT630O	10m	10m	10	Transparent	T-1	2.8	20m	70m	25m	610n	27		♦	PD1203
61	LDH5191	10m	10m	24	Transparent	T-1 3/4	2.0	20m	200m	60m	645n	5A%	Tr/Tf 100ns Typ	B	PD16ak Ø
62	LTL4224	10m	10m	16	Transparent	T-1 3/4	2.8	20m	100m	30m	635n	5A		♦	PD1211
63	LTL4294	10m	10m	16	Transparent	T-1 3/4	2.8	20m	100m	30m	635n	5A		♦	PD1211
64	MT430O	10m	15m	20	Transparent	T-1 3/4	2.8	20m	70m	25m	610n	27		♦	PD1199
65	TLO132	10m	15m	17	Water-clear	T-1 3/4	2.8	20m	70m	25m	610n	27		A	PD422 Ø
66	MOB52C	10m	20m		Transparent		3.0	20m			630n				PD50n
67	TLO164	10m†	20m		Diffused	T-1	2.8	20m	70m	25m	610n	27		A	PD1203 Ø
68	TLS164	10m†	20m		Diffused	T-1	2.8	20m	70m	25m	635n	27		A	PD1203 Ø
69	MOB52T	11m	20m		Transparent		3.0	20m			630n				PD50n
70	SY413T(A)	12m	10m	30	Water-clear	T-1 1/2	2.5	10m	100m	40m	590n	4A%		A	PD280c
71	ESAA3431	12m	20m		Diffused	T-1	2.5	20m	125m	50m	605n	38		A	PD33
72	LN88RCPP	12m†	20m		Water-clear	T-1	2.1	20m	90m	30m	630n	28		A	PD322
73	LS5421MO(A)	16m	10m	20	Transparent	T-1 3/4	3.0	10m	150m	45m	635n	5A%	Super Bright	A ♦	PD16ag Ø
74	550-5404	16m	20m	45	Diffused		2.5	20m	125m	50m	605n	38			PD66a
75	550-5405	16m	20m	45	Diffused		2.5	20m	125m	50m	605n	38			PD67a
76	559-5401-001	16m	20m	45	Diffused	Panel-mount	2.5	20m	125m	50m	605n	38			PD991
77	559-5401-003	16m	20m	45	Diffused	Panel-mount	2.5	20m	125m	50m	605n	38			PD991a
78	559-5401-004	16m	20m	45	Diffused	Panel-mount	2.5	20m	125m	50m	605n	38			PD991b
79	559-5401-005	16m	20m	45	Diffused	Panel-mount	2.5	20m	125m	50m	605n	38			PD991c
80	559-5401-006	16m	20m	45	Diffused	Panel-mount	2.5	20m	125m	50m	605n	38			PD991d
81	559-5401-007	16m	20m	45	Diffused	Panel-mount	2.5	20m	125m	50m	605n	38			PD991e
82	561-5401-050	16m	20m	45	Diffused	Panel-mount	2.5	20m	125m	50m	605n	38			PD1017
83	561-5401-060	16m	20m	45	Diffused	Panel-mount	2.5	20m	125m	50m	605n	38			PD1017a
84	561-5401-070	16m	20m	45	Diffused	Panel-mount	2.5	20m	125m	50m	605n	38			PD1017b
85	561-5401-080	16m	20m	45	Diffused	Panel-mount	2.5	20m	125m	50m	605n	38			PD1017c
86	561-5401-090	16m	20m	45	Diffused	Panel-mount	2.5	20m	125m	50m	605n	38			PD1017d
87	561-5401-100	16m	20m	45	Diffused	Panel-mount	2.5	20m	125m	50m	605n	38			PD1017e
88	550-5406	16m	20m	45	Diffused	Side-mount	2.5	20m	125m	50m	605n	38			PD68a
89	ESAA3401	16m	20m		Water-clear	T-1	2.5	20m	125m	50m	605n	38		A	PD33
90	ESAA5531	16m	20m		Diffused	T-1 3/4	2.5	20m	125m	50m	605n	38		A	PD28b
91	E1100	17m					2.0	20m		35m	635n			A	PD16f Ø
92	L111CA	17m	20m	30	Water-clear		3.0	20m	120m	30m	605n	5A		A	PD50t
93	LST5152	17m	20m	28	Water-clear		3.0	20m	120m	35m	635n	5A		A	PD50r Ø
94	LST5152R5	17m	20m	28			5	20m	120m	35m	635n	5A	Built-In Resistor		PD50r Ø
95	ORL5152	17m	20m	28		Side-mount	3.0	20m	120m	35m	635n	5A			PD507 Ø
96	LST3300S	17m	20m	28		T-1 3/4	3.0	20m	120m	35m	610n	5A			PD16ad
97	LST5152S	17m	20m	28		T-1 3/4	3.0	20m	120m	35m	610n	5A			PD16ad
98	LTL10294	18m†	10m		Transparent	T-1 3/4	2.8	20m			635n			A	PD1210b
99	SY415T	20m	10m	30	Transparent		2.5	10m	100m	40m	590n	4A%		A	PD257g
100	4040-1SERIES	20m†	10m			Panel-mount	2.2	10m		20m		5A	Built-In Resistor		PD1039a
101	4040-5SERIES	20m†	10m			Panel-mount	2.2	10m		20m		5A	Built-In Resistor		PD1039a
102	LDH5192	20m	10m	24	Transparent	T-1 3/4	2.0	20m	200m	60m	645n	5A%	Tr/Tf 100ns Typ	B	PD16ak Ø
103	TLO144	20m†	15m			T-1 3/4	2.8	20m	70m	25m	610n	27		A	PD1199 Ø
104	AA3668S	20m	20m		Transparent		2.5	20m	125m	50m	605n	38	Lens:Pale Orange		PD1396 Ø
105	TLO163	20m	20m	12	Transparent		2.8	20m	70m	25m	610n	27		♦	PD478 Ø
106	TLS163	20m†	20m		Transparent	T-1	2.8	20m	70m	25m	635n	27		A	PD1203 Ø
107	ESAA5633	20m	20m		Diffused	T-1 3/4	2.5	20m	125m	50m	605n	38		A	PD47b
108	MT530O	20m	20m	10	Transparent	T-1 3/4	2.8	20m	70m	25m	610n	27		♦	PD1202
109	560-0108	23m⊠	30m	65		T-1 3/4	24	16m	461m		635n	57			PD479
110	560-0502	24m	30m	28		T-1 3/4	4.3	25m	108m		635n	57			PD479

SYMBOLS AND CODES EXPLAINED IN INTERPRETER

IN ORDER OF COLOR AND: (1) INTENSITY (2) IF TEST (3) BEAM ANGLE & (4) TYPE No.

LINE No.	4 TYPE NUMBER	1 LUMINOUS INTENSITY MIN (cd)	2 IF TEST (A)	3 BEAM ANGLE θ HI (°)	LENS TYPE	LAMP STYLE	VF MAX (V)	IF TEST (A)	PD RATED MAX (W)	IF RATED MAX (A)	PEAK WAVE-LENGTH λP (m)	TEMP. RANGE CODE - +	FEATURES	LEAD CODE	OUTLINE DRAWING
1	560-0503	24m	30m	28		T-1 3/4	6.0	25m	150m		635n	57			PD479
2	560-0504	24m	30m	28		T-1 3/4	7.2	25m	180m		635n	57			PD479
3	560-0505	24m	30m	28		T-1 3/4	12	20m	240m		635n	57			PD479
4	560-0506	24m	30m	28		T-1 3/4	14	21m	302m		635n	57			PD479
5	560-0507	24m	30m	28		T-1 3/4	17	20m	336m		635n	57			PD479
6	560-0508	24m	30m	28		T-1 3/4	24	16m	461m		635n	57			PD479
7	CMD9150-1	25m		136	Water-clear		5.2	100m	625m	120m	630n	48		A	PD474
8	TLS144	25m†	15m		Diffused	T-1 3/4	2.8	20m	70m	25m	635n	27		A	PD1199 Ø
9	LDH5193	30m	10m	24	Transparent	T-1 3/4	2.0	20m	200m	60m	645n	5A%	Tr/Tf 100ns Typ	B	PD16ak Ø
10	7710-1SERIES	30m	20m				2.5	20m	125m	50m		38	xx Res	A	PD1304a
11	7710-5SERIES	30m	20m				2.5	20m	125m	50m		38	xx Res	A	PD1304a
12	7711-1SERIES	30m	20m				2.5	20m	125m	50m		38	xx Res	A	PD1304a
13	7711-5SERIES	30m	20m				2.5	20m	125m	50m		38	xx Res	A	PD1304a
14	7730-1SERIES	30m	20m				2.5	20m	125m	50m		38	xx Res	A	PD1304c
15	7730-5SERIES	30m	20m				2.5	20m	125m	50m		38	xx Res	A	PD1304c
16	7731-1SERIES	30m	20m				2.5	20m	125m	50m		38	xx Res	A	PD1304c
17	7731-5SERIES	30m	20m				2.5	20m	125m	50m		38	xx Res	A	PD1304c
18	7750-1SERIES	30m	20m				2.5	20m	125m	50m		38	xx Res	A	PD1304b
19	7750-5SERIES	30m	20m				2.5	20m	125m	50m		38	xx Res	A	PD1304b
20	7751-1SERIES	30m	20m				2.5	20m	125m	50m		38	xx Res	A	PD1304b
21	7751-5SERIES	30m	20m				2.5	20m	125m	50m		38	xx Res	A	PD1304b
22	TLO154	30m	20m	30	Diffused		2.8	20m	70m	25m	610n	27		♦	PD1105 Ø
23	ESAA5603	30m	20m		Water-clear	T-1 3/4	2.5	20m	125m	50m	605n	38		A	PD47b
24	MK9150-1	30m	100m				5.0	100m	625m	1.0	630n	48		A	PD474 Ø
25	5152R10	40m†		28		T-1 3/4	10	20m		35m	635n		Built-In Resistor		PD379
26	LS5421PO(A)	40m	10m	20	Transparent	T-1 3/4	3.0	10m	150m	45m	635n	5A%	Super Bright	A ♦	PD16ag Ø
27	TLO143	40m†	15m		Transparent	T-1 3/4	2.8	20m	70m	25m	610n	27		A	PD1199 Ø
28	LST5152R	40m†	20m	28	Water-clear		3.0 §	20m	120m	35m	635n	5A	Built-In Resistor		PD50r Ø
29	MV5152	40m†	20m	28	Transparent	T-1 3/4	3.0	20m	105m	35m	635n	5A		A	PD16n Ø
30	CMD9150-2	50m		136	Water-clear		5.2	100m	625m	120m	630n	48		A	PD474
31	TLS143	50m†	15m		Transparent	T-1 3/4	2.8	20m	70m	25m	635n	27		A	PD1199 Ø
32	TLS154	50m†	20m		Diffused	T-1 3/4	2.8	20m	70m	25m	635n	27		A	PD1202 Ø
33	550-5804	60m	20m	20	Water-clear		2.5	20m	125m	50m	605n	38			PD66a
34	550-5805	60m	20m	20	Water-clear		2.5	20m	125m	50m	605n	38			PD67a
35	L121CA	60m	20m	30	Water-clear		2.5	20m	75m	35m	605n	38		A	PD50n
36	TLO153	60m†	20m	9	Transparent		2.8	20m	70m	25m	610n	27		♦	PD1105 Ø
37	559-5801-001	60m	20m	20	Water-clear	Panel-mount	2.5	20m	125m	50m	605n	38			PD991
38	559-5801-003	60m	20m	20	Water-clear	Panel-mount	2.5	20m	125m	50m	605n	38			PD991a
39	559-5801-004	60m	20m	20	Water-clear	Panel-mount	2.5	20m	125m	50m	605n	38			PD991b
40	559-5801-005	60m	20m	20	Water-clear	Panel-mount	2.5	20m	125m	50m	605n	38			PD991c
41	559-5801-006	60m	20m	20	Water-clear	Panel-mount	2.5	20m	125m	50m	605n	38			PD991d
42	559-5801-007	60m	20m	20	Water-clear	Panel-mount	2.5	20m	125m	50m	605n	38			PD991e
43	561-5801-050	60m	20m	20	Water-clear	Panel-mount	2.5	20m	125m	50m	605n	38			PD1017
44	561-5801-060	60m	20m	20	Water-clear	Panel-mount	2.5	20m	125m	50m	605n	38			PD1017a
45	561-5801-070	60m	20m	20	Water-clear	Panel-mount	2.5	20m	125m	50m	605n	38			PD1017b
46	561-5801-080	60m	20m	20	Water-clear	Panel-mount	2.5	20m	125m	50m	605n	38			PD1017c
47	561-5801-090	60m	20m	20	Water-clear	Panel-mount	2.5	20m	125m	50m	605n	38			PD1017d
48	561-5801-100	60m	20m	20	Water-clear	Panel-mount	2.5	20m	125m	50m	605n	38			PD1017e
49	550-5806	60m	20m	20	Water-clear	Side-mount	2.5	20m	125m	50m	605n	38			PD68a
50	ESAA5501	60m	20m		Water-clear	T-1 3/4	2.5	20m	125m	50m	605n	38		A	PD28b
51	MK9150-2	60m	100m				5.0	100m	625m	1.0	630n	48		A	PD474 Ø
52	LS5421QO(A)	63m	10m	20	Transparent	T-1 3/4	3.0	10m	150m	45m	635n	5A%	Super Bright	A ♦	PD16ag Ø
53	TLS153	100m†	20m		Transparent	T-1 3/4	2.8	20m	70m	25m	635n	27		A	PD1202 Ø
54	LA3041D	1.0M	20m	45	Diffused		2.0	10m			635n			A	PD1247a

LED LAMP, YELLOW

58	555-3401						2.2	20m		40m		57			PD381
59	555-3403						5.0	6.7m				57			PD381
60	SLM13Y					Rectangular	2.0	10m	75m	25m	585n				PD1140
61	LED1031	500n					2.5	20m	100m	35m	580n	5A			PD544
62	HLMP6400-010	1.0u	10m	90	Diffused	Rectangular	3.0	10m	84m	20m	583n	5A		A	PD380a
63	CQS86L5	5.0u	10m	70	Diffused	T-1	2.6	10m	90m	30m	590n	A §		A	PD15e Ø
64	GL2HY1	100u	10m		Diffused	Cylindrical	2.5	10m	50m	20m	585n	28		A	PD333 Ø
65	AND226Y	.15m	10m		Diffused		2.8	20m	70m	25m	585n	5A		A	PD427
66	TLY226	150u	10m		Diffused		2.8	20m	70m	25m	585n	27		A	PD427 Ø
67	GL9HY22	170u	10m		Diffused		2.5	10m	50m	20m	585n	28			None
68	GL9HY10	170u	10m		Diffused	Rectangular	2.5	10m	50m	20m	585n	28			PD484
69	HLMP1760	200u	2.0m	140	Diffused		2.7	2.0m	24m	7.0m	583n	5A	Built-In Resistor		PD1338
70	GL9HY6	200u	10m		Diffused		2.5	10m	50m	20m	585n	28			None
71	GL9HY23	200u	10m		Diffused		2.5	10m	50m	20m	585n	28			None
72	SEL1712Y	200u	10m		Diffused		2.5	10m		30m	570n	28		A	PD500
73	SEL1720Y	200u	10m		Diffused		2.5	10m		30m	570n	28		A	PD497
74	SEL1721Y	200u	10m		Diffused		2.5	10m		30m	700n	28		A	PD498
75	SEL1731Y	200u	10m		Diffused		2.5	10m		30m	570n	28		A	PD501
76	SEL1741Y	200u	10m		Diffused		2.5	10m		30m	570n	28		A	PD502
77	GL9HY2	200u	10m		Diffused	Rectangular	2.5	10m	50m	20m	585n	28		A	PD334 ☑
78	GL9HY9	200u	10m		Diffused	Rectangular	2.5	10m	50m	20m	585n	28			PD490
79	LTL13259B	200u	10m	170		Rectangular	2.8	20m	60m	30m	585n	5A		♦	PD1231
80	LTL13279B	200u	10m	170		Rectangular	2.8	20m	60m	30m	600n	5A		♦	PD1231
81	SEL1723Y	200u	10m		Diffused	Rectangular	2.5	10m	90m	30m	570n	3A		A	PD383
82	SY925D	200u	10m		Diffused	T-1 3/4	2.5	10m	100m	10m	570n	4A%	Max IF 40mA,Vr 5V	A	PD1373a
83	TLSY3700	250u	10m	100	Diffused	Cylindrical	3.0	10m	100m	30m	585n	5A%			PD1195
84	TLSY3600	250u	10m	100	Diffused	Rectangular	3.0	10m	100m	30m	585n	5A%			PD1194
85	TLSY5600	250u	10m	100	Diffused	Rectangular	3.0	10m	100m	30m	585n	5A%		A	PD1005a
86	TLSY5700	250u	10m	100	Diffused	Rectangular	3.0	10m	100m	30m	585n	5A%		A	PD1006
87	TLSY5500	250u	10m	100	Diffused	Triangular	3.0	10m	100m	30m	585n	5A%			PD631
88	LDY481	250u	20m	100	Water-clear	DIP	2.8	10m	125m	40m	590n	5A%	Miniature Size	♦	PD1047a ☑
89	LA7531	300u			Diffused		2.0	10m			585n			A	PD1271
90	RYL5621	300u	2.8m	40	Diffused	Arch	6.0 §				583n	5A%	Internal Resistor	A	PD81 Ø
91	GL9HY24	0.3m	10m				2.5	10m	50m	20m	585n	28			None ☑
92	LTL1254A	300u	10m	120	Diffused	Cylindrical	2.8	20m	60m	20m	585n	5A		A	PD1218
93	LTL2254WC	300u	10m	150	Water-clear	Cylindrical	2.8	20m	60m	20m	585n	5A		B	PD1362
94	LTL2254YT	300u	10m	150	Transparent	Cylindrical	2.8	20m	60m	20m	585n	5A		B	PD1362
95	LTL3255S	300u	10m	150	Diffused	Rectangular	2.8	20m	60m	20m	585n	5A		A	PD1222
96	LTL13255A	300u	10m	150		Rectangular	2.8	20m	60m	20m	585n	5A		♦	PD1363
97	LTL13258A	300u	10m	180	Diffused	Rectangular	2.8	20m	60m	20m	585n	5A		A	PD1230
98	LTL23273A	300u	10m	140		Rectangular	2.8	20m	60m	20m	600n	5A		A	PD1364
99	LTL9272A	300u	10m	100		Square	2.8	20m	60m	20m	600n	5A		♦	PD1366
100	GL3HY3	300u	10m			T-1	2.5	10m	50m	20m	585n	28		A	PD279 Ø
101	LA7031(2)	300u	20m		Diffused		2.0	10m			585n			A	PD1267
102	LA7131	300u	20m		Diffused		2.0	10m			585n			A	PD1268
103	LA7231	300u	20m		Diffused		2.0	10m			585n			A	PD1269
104	LA7431	300u	20m		Diffused		2.0	10m			585n			A	PD1270
105	LA7631D	300u	20m		Diffused		2.0	10m			585n			A	PD1272
106	HLMP7019-011	400u	2.0m	70	Diffused		2.7	2.0m	36m	7.0m	583n	5A		A	PD1340a
107	HLMP7019-021	400u	2.0m	70	Diffused		2.7	2.0m	36m	7.0m	583n	5A		A	PD1341a
108	HLMP7019	400u	2m	70	Diffused	T-3/4	2.7	2m	36m	7m	583n	5A		A	PD180a
109	LD161(1)	400u	10m		Water-clear		3.0	20m		25m				A	PD354
110	TLUY2400	400u	10m	40	Diffused		3.0	10m	100m	30m	585n	5A%	Stackable	A	PD394a

SYMBOLS AND CODES EXPLAINED IN INTERPRETER

2. LED LAMPS - Yellow (Cont'd)

IN ORDER OF COLOR AND: (1) INTENSITY (2) IF TEST (3) BEAM ANGLE & (4) TYPE No.

LINE No.	4 TYPE NUMBER	1 LUMINOUS INTENSITY MIN (cd)	2 IF TEST (A)	3 BEAM ANGLE θ HI (°)	LENS TYPE	LAMP STYLE	VF MAX (V)	IF TEST (A)	PD RATED MAX (W)	IF RATED MAX (A)	PEAK WAVE-LENGTH λP (m)	TEMP. RANGE CODE - +	FEATURES	LEAD CODE	OUTLINE DRAWING
1	TLAY5400	400u	10m	50	Diffused	Arch	3.0	20m	100m	30m	585n	5A%	Stackable		PD1189
2	LTL2253A	400u	10m	200		Cylindrical	2.8	20m	60m	20m	585n	5A		A	PD1219
3	TLSY3200(A)	400u	10m	100	Diffused	Cylindrical	3.0	10m	100m	30m	585n	5A%			PD1191
4	TLSY3701	400u	10m	100	Diffused	Cylindrical	3.0	10m	100m	30m	585n	5A%			PD1195
5	TLMY2200	400u	10m		Transparent	Herm. Can	3.0	10m			585n	5A%	Typ P 70mW,I 23mA	V	PD1384
6	CQX30	400u	10m	50	Diffused	Low-dome	3.0	20m	100m	30m	585n	5A%		A	PD395 Ø
7	GL9HY4	0.4m	10m			Rectangular	2.5	10m	50m	20m	585n	28		A	PD334a
8	LTL3251A	400u	10m	124	Diffused	Rectangular	2.8	20m	60m	20m	585n	5A		A	PD1220
9	LTL3253A	400u	10m	130	Diffused	Rectangular	2.8	20m	60m	20m	585n	5A		A	PD1221
10	LTL3257A	400u	10m	120	Diffused	Rectangular	2.8	20m	60m	20m	585n	5A		A	PD1223
11	LTL13251AL	400u	10m	130	Diffused	Rectangular	2.8	20m	60m	20m	585n	5A		A	PD1229
12	LTL23251AL	400u	10m	130	Diffused	Rectangular	2.8	20m	60m	20m	585n	5A		A	PD1232
13	LTL23253A	400u	10m	140		Rectangular	2.8	20m	60m	20m	585n	5A		A	PD1364
14	LTL23254A	400u	10m	125		Rectangular	2.8	20m	60m	20m	585n	5A		A	PD1365
15	LTL23274A	400u	10m	125		Rectangular	2.8	20m	60m	20m	600n	5A		A	PD1365
16	TLSY3300	400u	10m	100	Diffused	Rectangular	3.0	10m	100m	30m	585n	5A%			PD1192
17	TLSY3601	400u	10m	100	Diffused	Rectangular	3.0	10m	100m	30m	585n	5A%			PD1194
18	TLSY5100	400u	10m	100	Diffused	Rectangular	3.0	20m	100m	30m	585n	5A%			PD627
19	TLSY5300	400u	10m	100	Diffused	Rectangular	3.0	20m	100m	30m	585n	5A%			PD629
20	TLSY5601	400u	10m	100	Diffused	Rectangular	3.0	10m	100m	30m	585n	5A%		A	PD1005a
21	TLSY5701	400u	10m	100	Diffused	Rectangular	3.0	10m	100m	30m	585n	5A%		A	PD1006
22	LTL9252A	400u	10m	100		Square	2.8	20m	60m	20m	585n	5A		♦	PD1366
23	LTL9253A	400u	10m	150	Diffused	Square	2.8	20m	60m	20m	585n	5A		A	PD1227
24	LTL9254A	400u	10m	120	Diffused	Square	2.8	20m	60m	20m	585n	5A		A	PD1228
25	TLY124	400u	10m	40	Diffused	T-1	2.8	20m	70m	25m	585n	27		A	PD279c Ø
26	TLHY5600	400u	10m	160	Diffused	T-1 3/4	3.0	20m	100m	30m	585n	5A%		A	PD280k
27	TLHY6600	400u	10m	160	Diffused	T-1 3/4	3.0	10m	100m	30m	585n	5A%	High-efficiency	A	PD280k
28	TLSY5200	400u	10m	100	Diffused	T-1 3/4	3.0	20m	100m	30m	585n	5A%			PD628
29	LTL8252A	400u	10m	100	Diffused	Triangular	2.8	20m	60m	20m	585n	5A		A	PD1226
30	TLSY3400	400u	10m	100	Diffused	Triangular	3.0	10m	100m	30m	585n	5A%			PD1193
31	TLSY5400	400u	10m	100	Diffused	Triangular	3.0	10m	100m	30m	585n	5A%			PD630
32	TLSY5501	400u	10m	100	Diffused	Triangular	3.0	10m	100m	30m	585n	5A%			PD631
33	TLY206	400u	15m		Diffused	Cylindrical	2.8	20m	70m	25m	585n	27		A	PD424 Ø
34	AND205Y	400u	15m			Rectangular	2.8	20m	70m	25m	585n	27		A	PD383 Ø
35	AND208Y	0.4m	15m		Diffused	Rectangular	2.8	20m	70m	25m	585n	5A		♦	PD540
36	TLY205	400u	15m		Diffused	Rectangular	2.8	20m	70m	25m	585n	27		A	PD383 Ø
37	TLY208	400u	15m		Diffused	Rectangular	2.8	20m	70m	25m	585n	27		A	PD540
38	TLY207	400u	15m		Diffused	Triangular	2.8	20m	70m	25m	585n	27		A	PD425
39	LA6031	400u	20m		Diffused		2.0	10m			585n			A	PD1258
40	LA6131	400u	20m		Diffused		2.0	10m			485n			A	PD1259
41	LA6231	400u	20m		Diffused		2.0	10m			585n			A	PD1260
42	LA6331	400u	20m		Diffused		2.0	10m			585n			A	PD1261
43	LA6431	400u	20m		Diffused		2.0	10m			585n			A	PD1262
44	LA6531D	400u	20m		Diffused		2.0	10m			585n			A	PD1263
45	LA6631	400u	20m		Diffused		2.0	10m			585n			A	PD1264
46	LA6731	400u	20m		Diffused		2.0	10m			585n			A	PD1265
47	LA6831	400u	20m		Diffused		2.0	10m			585n			A	PD1266
48	LA8531	400u	20m		Diffused		2.0	10m			585n			A	PD1273
49	LA9031	400u	20m		Diffused		2.0	10m			585n			A	PD1274
50	AND124Y	400u	20m	50	Diffused	T-1	2.8	20m	70m	25m	585n	57		A	PD279c Ø
51	HLMP1674	500u		140	Diffused		7.5			15m	583n	48	Built-In Resistor		PD1338
52	HLMP1675	500u		140	Diffused		15			20m	583n	48	Built-In Resistor		PD1338
53	558-0302-001	500u				Panel-mount	7.5			20m	580n		Built-In Resistor	♦	PD990
54	558-0302-003	500u				Panel-mount	7.5			20m	580n		Built-In Resistor	♦	PD990a
55	558-0302-004	500u				Panel-mount	7.5			20m	580n		Built-In Resistor	♦	PD990b
56	558-0302-005	500u				Panel-mount	7.5			20m	580n		Built-In Resistor	♦	PD990c
57	558-0302-006	500u				Panel-mount	7.5			20m	580n		Built-In Resistor	♦	PD990d
58	558-0302-007	500u				Panel-mount	7.5			20m	580n		Built-In Resistor	♦	PD990e
59	GL4HY2	500u	10m		Diffused		2.5	10m	50m	20m	585n	28		A	PD279b Ø
60	LTL5259	500u	10m	150	Diffused		2.8	20m	60m	20m	585n	5A		♦	PD1213a
61	MT230Y	500u	10m	75	Transparent		2.8	20m	70m	25m	585n	27		♦	PD478
62	MT240Y	500u	10m	75	Diffused		2.8	20m	70m	25m	585n	27		♦	PD478
63	TLY209	500u	10m				2.8	20m	70m	25m	585n	37		A	None
64	TLY210	0.5m	10m		Diffused		2.8	20m	70m	25m	585n	27		A	None
65	CQX12	500u	10m	50	Diffused	Arch	3.0	10m	120m	30m	590n	XA§		A	PD431
66	CQV62L(A)	.5m	10m	110		Rectangular	3.0	10m	90m	30m	590n	5A%			PD1082
67	LTL3258A	500u	10m	106	Diffused	Rectangular	2.8	20m	60m	20m	585n	5A		A	PD1224
68	MT109Y	500u	10m		Diffused	Square	2.8	20m	70m	25m	585n	27		A	PD1351
69	GL3HY1	500u	10m		Diffused	T-1	2.5	10m	50m	20m	585n	28		A	PD279 Ø
70	GL3HY2	500u	10m		Diffused	T-1	2.5	10m	50m	20m	585n	28		A	PD279a Ø
71	HLMP1400	0.5m	10m		Diffused	T-1	3.0	10m	120m	20m	583n	5A		B	PD77h
72	TLY123	500u	10m	40	Water-clear	T-1	2.8	20m	70m	25m	585n	27		A	PD279c Ø
73	CQX75	.50m	10m			T-1 3/4	3.0	10m	120m	30m	590n	5A%		A	PD56c
74	CQX76	.50m	10m			T-1 3/4	3.0	10m	120m	30m	590n	5A%		A	PD56c
75	CQX77	.50m	10m			T-1 3/4	3.0	10m	120m	30m	590n	5A%		A	PD56c
76	CQX78	.50m	10m			T-1 3/4	3.0	10m	120m	30m	590n	5A%		A	PD56c
77	GL5HY1	500u	10m		Diffused	T-1 3/4	2.5	10m	50m	20m	585n	28		A	PD280 Ø
78	GL5HY2	500u	10m		Diffused	T-1 3/4	2.5	10m	50m	20m	585n	28		A	PD280a Ø
79	LST4353F	500u	10m	80	Diffused	T-1 3/4	2.8	20m	120m	40m	585n	5A		A	PD16ag
80	NSC526Y	500u	10m	70	Diffused	T-1 3/4	2.8	10m	115m	35m	585n	5A		A	PD18d Ø
81	SL5003	.5m	10m	5.0		T-1 3/4	2.8	10m		35m	595n	4A%			PD90c
82	SY406D(1)	0.5m	10m			T-3/4	2.5	10m		40m	590n	4A%		A	PD947
83	AND206Y	.50m	15m		Diffused	Cylindrical	2.8	20m	70m	25m	585n	5A		A	PD424
84	AND207Y	0.5m	15m		Diffused	Triangular	2.8	20m	70m	25m	585n	5A		♦	PD425
85	CK3Y	500u	20m	100			2.0	20m	180m	70m		5A		A	PD283
86	CK5Y	500u	20m	100			2.0	20m	180m	70m		5A		A	PD19
87	LA2031	500u	20m	40	Diffused		2.0	10m			585n			A	PD1252
88	LA2431	500u	20m	40	Diffused		2.0	10m			585n			A	PD1253
89	LA3731D	500u	20m		Diffused		2.0	10m			585n			A	PD1256
90	LA4031	500u	20m	60	Diffused		2.0	10m			585n			A	PD1247c
91	LA5031	500u	20m	45	Diffused		2.0	10m			585n			A	PD1248
92	LA5731	500u	20m	60	Diffused		2.0	10m			585n			A	PD1250
93	LA5831	500u	20m		Diffused		2.0	10m			585n			A	PD1257
94	LA40031	500u	20m	90	Diffused		2.0	10m			585n			A	PD1247c
95	LA50131	500u	20m	120	Diffused		2.0	10m			585n			A	PD1248
96	LA57131	500u	20m	180	Diffused		2.0	10m			585n				PD1250
97	LAH3102	500u	20m	80	Diffused		2.0	10m			585n			A	PD1279
98	MY61D	500u	20m				3.0	20m	105m	35m	585n	5A		B	None
99	NSL5352	500u	20m	15	Water-clear		2.4	20m	175m	50m	575n	4A		A	PD50g Ø
100	NSL5353	500u	20m	20	Diffused		2.4	20m	175m	50m	575n	4A		A	PD50g Ø
101	MY21D	500u	20m			Cylindrical	3.0	20m	105m	35m	585n	5A			PD333a
102	HLMP0454	.5m	20m	70		Panel-mount	3.0	20m	120m	35m	585n	5A			PD369
103	HLMP0480	.5m	20m	70		Panel-mount	3.0	20m	120m	35m	585n	5A			PD369
104	HLMP0481	.5m	20m	70		Panel-mount	3.0	20m	120m	35m	585n	5A			PD369
105	MY71D	500u	20m			Rectangular	3.0	20m	105m	35m	585n	5A		A	PD490
106	AND123Y	500u	20m	40	Water-clear	T-1	2.8	20m	70m	25m	585n	57		A	PD279c Ø
107	MY81D	500u	20m			T-1 3/4	3.0	20m	105m	35m	585n	5A			PD562
108	547-2403	.60m					5.0	6.7m			583n	5A			PD378
109	555-2403	600u†					5.0 §	6.7m			583n	5A			None
110	NSC209-5VY	600u		75	Diffused		5.0 §	20m	100m	20m	585n	5A		A	PD16ac Ø

SYMBOLS AND CODES EXPLAINED IN INTERPRETER

2. LED LAMPS - Yellow (Cont'd)

IN ORDER OF COLOR AND: (1) INTENSITY (2) IF TEST (3) BEAM ANGLE & (4) TYPE No.

LINE No.	4 TYPE NUMBER	1 LUMINOUS INTENSITY MIN (cd)	2 IF TEST (A)	3 BEAM ANGLE θ HI (°)	LENS TYPE	LAMP STYLE	VF MAX (V)	IF TEST (A)	PD RATED MAX (W)	IF RATED MAX (A)	PEAK WAVE-LENGTH λP (m)	TEMP. RANGE CODE - +	FEATURES	LEAD CODE	OUTLINE DRAWING
1	NSC556Y	600u	10m	30	Diffused	T-1 3/4	2.8	10m	115m	35m	585n	5A		A	PD18c Ø
2	NSC4850Y	600u	10m	80	Diffused	T-1 3/4		10m	115m	40m	585n	5A		A	PD18c Ø
3	NSC5053Y	600u	10m	80	Diffused	T-1 3/4	2.8	10m	115m	35m	585n	5A		B	PD284 Ø
4	NSC5059Y	600u	10m	80	Diffused	T-1 3/4	2.8	10m	110m	30m	585n	5A		B	PD16ad Ø
5	MT2240Y	600u	15m	120	Diffused		2.8	20m	70m	25m	585n	27	Side View	A	PD915
6	TLY102A	0.6m	15m	180	Diffused		2.8	20m	85m	30	585n	27		♦	PD1102 Ø
7	559-4301-001	600u	20m	55	Diffused		2.8	20m	70m	30m	583n	28		♦	PD997
8	559-4301-007	600u	20m	55	Diffused		2.8	20m	70m	30m	583n	28		♦	PD997e
9	LA2831	600u	20m		Diffused		2.0	10m			585n			A	PD1254
10	LA3031	600u	20m	60	Diffused		2.0	10m			585n			A	PD1247
11	LA3031D	600u	20m	45	Diffused		2.0	10m			585n			A	PD1247a
12	LA3631	600u	20m	90	Diffused		2.0	10m			585n			A	PD1247b
13	LA4231	600u	20m	60	Diffused		2.0	10m			585n			A	PD1247d
14	LA5031D	600u	20m	24	Diffused		2.0	10m			585n			A	PD1247E
15	LA5731D	600u	20m	40	Diffused		2.0	10m			585n				PD1251
16	LA8931D	600u	20m		Diffused		2.0	10m			585n			A	PD1255
17	LA30031	600u	20m	90	Diffused		2.0	10m			585n			A	PD1247
18	LA42031	600u	20m	90	Diffused		2.0	10m			585n			A	PD1247d
19	LAH496	600u	20m		Diffused		2.2	10m			585n			A	PD1280
20	LAH499	600u	20m		Diffused		2.2	10m			585n			A	PD1281
21	LAH503	600u	20m		Diffused		2.2	10m			585n			A	PD1280a
22	LAH509	600u	20m		Diffused		2.2	10m			585n			A	PD1281a
23	SLP458B	600u†	20m		Diffused		2.1	20m	70m	25m	585n	28		♦	PD1315
24	LYZ181CO	600u	20m	100	Diffused	DIP				25m			Mini	♦	PD1047
25	559-4301-003	600u	20m	55	Diffused	Panel-mount	2.8	20m	70m	30m	583n	28		♦	PD997a
26	559-4301-004	600u	20m	55	Diffused	Panel-mount	2.8	20m	120m	50m	583n	5A		♦	PD997b
27	559-4301-005	600u	20m	55	Diffused	Panel-mount	2.8	20m	70m	30m	583n	28		♦	PD997c
28	559-4301-006	600u	20m	55	Diffused	Panel-mount	2.8	20m	70m	30m	583n	28		♦	PD997d
29	LY3369EO	630u	2.0m	60	Diffused	T-1	2.7	2.0m	20m	7.5m	590n	5A%	IC Compatible	A	PD279c Ø
30	TLLG4400	630u	2.0m	25	Diffused	T-1	2.4	2.0m	20m	7.0m	565n	5A%	Low Current		PD1190
31	TLLY4400	630u	2.0m	25	Diffused	T-1	2.9	2.0m	20m	7.0m	585n	5A%	Low Current		PD1190
32	LY5469EO	630u	2.0m	50	Diffused	T-1 3/4	2.7	2.0m	20m	7.5m	590n	5A%	IC Compatible	A ♦	PD16ah Ø
33	TLLY5400	630u	2.0m	25	Diffused	T-1 3/4	2.9	2.0m	20m	7.0m	585n	XA§		A	PD1205
34	LYU260	630u	10m	60	Diffused		2.6	10m	150m	45m	590n	5A%	mini	♦	PD354
35	TLAY5402	630u	10m	50	Diffused	Arch	3.0	20m	100m	30m	585n	5A%	Stackable		PD1189
36	TLSY2100	630u	10m	100	Diffused	Rectangular	3.0	20m	100m	50m	585n	5A%			PD489c
37	TLPY5600(A)	630u	10m	80	Diffused	Side-mount	3.0	10m	100m	30m	585n	XA§	Side View		PD1183
38	TLHY4600(A)	630u	10m	120	Diffused	T-1	3.0	10m	100m	30m	585n	5A%	High-efficiency		PD1190
39	TLHY5601	630u	10m	160	Diffused	T-1 3/4	3.0	20m	100m	30m	585n	5A%		A	PD280k
40	TLHY6601	630u	10m	160	Diffused	T-1 3/4	3.0	10m	100m	30m	585n	5A%	High-efficiency	A	PD280k
41	CQV82L(A)	700u	10m	100	Diffused		3.0	10m	90m%	30m	590n	A §	Octagon	A	PD262m
42	LTL229	700u	10m	72	Diffused		2.8	20m	100m	30m	635n	5A		♦	PD1210c
43	CQX12-1	700u	10m	50		Arch	2.1	10m		30m	590n			A	PD431
44	CQW62(A)	700u	10m	110	Diffused	Panel-mount	3.0	10m	90m%	30m	590n	A §		A	PD1082 ⊠
45	CQW62L(A)	700u	10m	110	Diffused	Panel-mount	3.0	10m	90m%	30m	590n	A §		A	PD1084 ⊠
46	CQV72	700u	10m	100	Diffused	Rectangular	3.0	10m	90m%	30m	590n	A §		A	PD1085 ⊠
47	CQV72L	700u	10m	100	Diffused	Rectangular	3.0	10m	90m%	30m	590n	A §		A	PD1086 ⊠
48	CQW12B(A)	700u	10m	100	Diffused	Rectangular	3.0	10m	90m%	30m	590n	A §		A	PD922 ⊠
49	CQW12BL(A)	700u	10m	100	Diffused	Rectangular	3.0	10m	90m%	30m	590n	A §		A	PD922 ⊠
50	CQS86L	700u	10m	70	Diffused	T-1	2.6	10m	90m%	30m	590n	A §		A	PD15e Ø
51	CQS97	700u	10m	60	Diffused	T-1	2.8	20m	90m%	30m	590n	A §	.	A	PD322c Ø
52	CQY96	700u	10m	70	Diffused	T-1	3.0	10m	90m%	30m	590n	A §		A ♦	PD232j Ø
53	CQY96L	700u	10m	70	Diffused	T-1	3.0	10m	90m%	30m	590n	A §		A	PD232k Ø
54	CQY97A(A)	700u	10m	70	Diffused	T-1	3.0	10m	90m%	30m	590n	A §		A ♦	PD77 Ø
55	NSC3040	700u	10m	90	Diffused	T-1 3/4	2.8	10m	110m	30m	585n	5A			PD1083 Ø
56	NSC3041	700u	10m	60	Transparent	T-1 3/4	2.8	10m	110m	30m	585n	5A			PD1083 Ø
57	Y32	.7m	20m				2.6	20m			575n				PD1019
58	CQW22(A)	700u	20m	110	Diffused	Cylindrical	3.0	20m	90m%	30m	590n	A §		A	PD1055 Ø
59	MY62D	700u	20m		Diffused	Rectangular	3.0	20m			585n				PD484b
60	550-0804	0.8m					5.0	20m		20m	580n	5A			PD66
61	550-0805	0.8m					5.0	20m		20m	580n	5A			PD67
62	550-0806	0.8m					5.0	20m		20m	580n	5A			PD68
63	559-0302-001	800u				Panel-mount	7.5			20m	580n		Built-In Resistor	♦	PD991
64	559-0302-003	800u				Panel-mount	7.5			20m	580n		Built-In Resistor	♦	PD991a
65	559-0302-004	800u				Panel-mount	7.5			20m	580n		Built-In Resistor	♦	PD991b
66	559-0302-005	800u				Panel-mount	7.5			20m	580n		Built-In Resistor	♦	PD991c
67	559-0302-006	800u				Panel-mount	7.5			20m	580n		Built-In Resistor	♦	PD991d
68	559-0302-007	800u				Panel-mount	7.5			20m	580n		Built-In Resistor	♦	PD991e
69	MT850-5VY	800u	5.0m	80	Diffused		20	5.0m	70m	7.5m	585n	27	w/resistor for 5V	A	PD1162
70	521-9211	800u	10m	60			3.0	10m	100m	30m	580n	5A		B	PD77e Ø
71	551-0305	800u†	10m	60	Diffused		3.0	10m	100m	30m	580n	5A		A	PD382 ⊠
72	MT140HLY	800u	15m	80	Diffused		2.8	20m	70m	25m	585n	27	Wire-Wrap Leads		PD258b
73	MT140SLY	800u	15m	80	Diffused		2.8	20m	100m	25m	585n	27			PD258c
74	MT140Y	800u	15m	80	Diffused		2.8	20m	100m	25m	585n	27		A	PD1162
75	MT470Y	800u	15m	120	Transparent		2.8	20m	70m	25m	585n	27	Truncated Lens	♦	PD1201
76	MT610Y	800u	15m	120	Transparent		2.8	20m	70m	25m	585n	27	Concave	A	PD1348
77	AND114Y	800u	15m	85	Jewel	T-1 3/4	2.8	20m	100m	25m	590n	57		A	PD215 Ø
78	TLY114A	800u	15m	80	Diffused	T-1 3/4	2.8	20m	100m	25m	585n	27		A	PD422a Ø
79	LA50231	800u	20m	15	Diffused		2.0	10m			585n			A	PD1248
80	LA50331	800u	20m	30	Diffused		2.0	10m			585n			A	PD1248
81	MY31C	800u	20m	40	Water-clear		3.0	20m	60m	35m	585n	5A		A	PD257
82	MY31D	800u	20m	45	Diffused		3.0	20m	60m	35m	585n	5A		A	PD257
83	MY31T	800u	20m	40	Transparent		3.0	20m	60m	35m	585n	5A		A	PD257
84	MY31W	800u	20m	45	Milk-white		3.0	20m	60m	35m	585n	5A		A	PD257
85	MY51C	800u	20m	50	Water-clear	T-1	3.0	20m	105m	35m	585n	5A		A	PD258
86	MY51D	800u	20m	65	Diffused	T-1	3.0	20m	105m	35m	585n	5A		A	PD258
87	MY51T	800u	20m		Transparent	T-1	3.0	20m	105m	35m	585n	5A		A	PD258
88	MY51W	800u	20m	65	Milk-white	T-1	3.0	20m	105m	35m	585n	5A		A	PD258
89	TIL212-1	800u	20m	60	Diffused	T-1	3.2	20m		50m	580n	5A		♦	PD16ae
90	MYB51C	800u	20m	20	Water-clear	T-1 3/4	3.0	20m	105m	35m	585n	5A		B	PD16j
91	MYB51D	800u	20m	40	Diffused	T-1 3/4	3.0	20m	105m	35m	585n	5A		B	PD16j
92	MYB51T	800u	20m	20	Transparent	T-1 3/4	3.0	20m	105m	35m	585n	5A		B	PD16j
93	MYB51W	800u	20m	40	Milk-white	T-1 3/4	3.0	20m	105m	35m	585n	5A		B	PD16j
94	LLL27	800u	25m	30		T-1	3.6	25m	150m	40m	580n	48		A	PD54 Ø
95	MSL27	800u	25m	30	Diffused	T-1	3.6	25m	150m	40m	580n	48		A	PD55 Ø
96	HLMP1819	900u	10m	140	Diffused		3.0	10m	85m	20m	583n	5A			PD1338
97	HLMP-L350	900u	10m	140	Diffused		3.0	10m	85m	20m	583n	5A		A	PD1339
98	SEL1710Y	900u	10m		Diffused	T-1 3/4	2.5	10m		30m	570n	3A		A	PD280e
99	LA50431	900u	20m	24	Diffused		2.0	10m			585n			A	PD1247e
100	LA50531	900u	20m	15	Diffused		2.0	10m			585n			A	PD1247e
101	CQV62(A)	1.0m			Diffused		2.1	10m		30m	590n				None ⊠
102	LY3369FO	1.0m	2.0m	60	Diffused	T-1	2.7	2.0m	20m	7.5m	590n	5A%	IC Compatible	A	PD279c Ø
103	TLLG4401	1.0m	2.0m	25	Diffused	T-1	2.4	2.0m	20m	7.0m	565n	5A%	Low Current		PD1190
104	TLLY4401	1.0m	2.0m	25	Diffused	T-1	2.9	2.0m	20m	7.0m	585n	5A%	Low Current		PD1190
105	HLMP1719	1.0m	2m	50	Diffused	T-1 1/2	2.7	2m	36m	7m	583n	5A			PD1150
106	LY5469FO	1.0m	2.0m	50	Diffused	T-1 3/4	2.7	2.0m	20m	7.5m	590n	5A%	IC Compatible	A ♦	PD16ah Ø
107	TLLY5401	1.0m	2.0m	25	Diffused	T-1 3/4	2.9	2.0m	20m	7.0m	585n	XA§		A	PD1205
108	MT860-5VY	1.0m	5.0m	50	Transparent		20	5.0m	70m	7.5m	585n	27	w/resistor for 5V	A	PD1162
109	CQV82L2(A)	1.0m	10m	100	Diffused		3.0	10m	90m%	30m	590	A §	Octagonal	A	PD262m
110	HLMP6400-011	1.0m	10m	90	Diffused		3.0	10m	85m	20m	583n	5A		A	PD1340a

SYMBOLS AND CODES EXPLAINED IN INTERPRETER

2. LED LAMPS - Yellow (Cont'd)

IN ORDER OF COLOR AND: (1) INTENSITY (2) IF TEST (3) BEAM ANGLE & (4) TYPE No.

LINE No.	4 TYPE NUMBER	1 LUMINOUS INTENSITY MIN (cd)	2 IF TEST (A)	3 BEAM ANGLE θ HI (°)	LENS TYPE	LAMP STYLE	VF MAX (V)	IF TEST (A)	PD RATED MAX (W)	IF RATED MAX (A)	PEAK WAVE-LENGTH λP (m)	TEMP. RANGE CODE - +	FEATURES	LEAD CODE	OUTLINE DRAWING
1	HLMP6400-021	1.0m	10m	90	Diffused		3.0	10m	85m	20m	583n	5A		A	PD1341a
2	LTL5253	1.0m	10m	64	Diffused		2.8	20m	60m	20m	585n	5A		♦	PD1361
3	TLUY2401	1.0m	10m	40	Diffused		3.0	10m	100m	30m	585n	5A%	Stackable	A	PD394a
4	CQX12II	1.0m	10m	40		Arch	3.0	10m	120m	30m	590n	XA§		A	PD431
5	TLAY5401	1.0m	10m	50	Diffused	Arch	3.0	20m	100m	30m	585n	5A%	Stackable		PD1189
6	TLAY5403	1.0m	10m	50	Diffused	Arch	3.0	20m	100m	30m	585n	5A%	Stackable		PD1189
7	TLSY3201(A)	1.0m	10m	100	Diffused	Cylindrical	3.0	10m	100m	30m	585n	5A%			PD1191
8	CQW62-2(A)	1.0m	10m	110	Diffused	Panel-mount	3.0	10m	90m%	30m	590n	A §		A	PD1082 ⊘
9	CQW62L2(A)	1.0m	10m	110	Diffused	Panel-mount	3.0	10m	90m%	30m	590n	A §		A	PD1084 ⊘
10	CQV72-2(A)	1.0m	10m	100	Diffused	Rectangular	3.0	10m	90m%	30m	590n	A §		A	PD1085 ⊘
11	CQV72L2(A)	1.0m	10m	100	Diffused	Rectangular	3.0	10m	90m	30m	590n	A §		A	PD1086 ⊘
12	CQW12B2(A)	1.0m	10m	100	Diffused	Rectangular	3.0	10m	90m%	30m	590n	A §		A	PD922 ⊘
13	CQW12BL2(A)	1.0m	10m	100	Diffused	Rectangular	3.0	10m	90m%	30m	590n	A §		A	PD922 ⊘
14	TLSY2101	1.0m	10m	100	Diffused	Rectangular	3.0	20m	100m	50m	585n	5A%			PD489c
15	TLSY3301	1.0m	10m	100	Diffused	Rectangular	3.0	10m	100m	30m	585n	5A%			PD1192
16	TLSY5101	1.0m	10m	100	Diffused	Rectangular	3.0	20m	100m	30m	585n	5A%			PD627
17	TLSY5301	1.0m	10m	100	Diffused	Rectangular	3.0	20m	100m	30m	585n	5A%			PD629
18	CQS97-2	1.0m	10m	60	Diffused	T-1	2.8	20m	90m%	30m	590n	A §		A	PD322c Ø
19	HLMP1401	1.0m	10m		Diffused	T-1	3.0	10m	120m	20m	583n	5A		B	PD77h
20	HLMP1450	1.0m	10m	55		T-1	3.0	10m	85m	60m	583n	5A	RES		PD77
21	LDY1131	1.0m	10m	70	Diffused	T-1	3.0	20m	200m	60m	590n	5A%	Tr/Tf 200ns Typ	B	PD16al Ø
22	MV53640	1.0m	10m	90		T-1	3.0	10m	120m	30m	585n	5A		B	PD77m
23	SL5000	1m	10m	60		T-1	2.8	10m		35m	595n	4A%			PD77p
24	TLHY4601(A)	1.0m	10m	120	Diffused	T-1	3.0	10m	100m	30m	585n	5A%	High-efficiency		PD1190
25	TLHY4602(A)	1.0m	10m	120	Diffused	T-1	3.0	10m	100m	30m	585n	5A%	High-efficiency		PD1190
26	LDY5061	1.0m	10m	70	Diffused	T-1 3/4	3.0	20m	200m	60m	590n	5A%	Tr/Tf 200ns Typ	B	PD16ak Ø
27	LDY5161	1.0m	10m	70	Diffused	T-1 3/4	3.0	20m	200m	60m	590n	5A%	Tr/Tf 200ns Typ	B	PD16ak Ø
28	LTL253	1.0m	10m	54	Diffused	T-1 3/4	2.8	20m	60m	20m	585n	5A		♦	PD1211
29	LTL254	1.0m	10m	32	Transparent	T-1 3/4	2.8	20m	60m	20m	585n	5A		♦	PD1211
30	TLHY5400	1.0m	10m	60	Diffused	T-1 3/4	3.0	20m	100m	30m	585n	5A%		A	PD280k
31	TLHY5603	1.0m	10m	160	Diffused	T-1 3/4	3.0	20m	100m	30m	585n	5A%		A	PD280k
32	TLHY5605	1.0m	10m	160	Diffused	T-1 3/4	3.0	20m	100m	30m	585n	5A%	High-efficiency	A	PD280k
33	TLHY6400	1.0m	10m	60	Diffused	T-1 3/4	3.0	10m	100m	30m	585n	5A%	High-efficiency	A	PD280k
34	TLHY6603	1.0m	10m	160	Diffused	T-1 3/4	3.0	10m	100m	30m	585n	5A%	High-efficiency	A	PD280k
35	TLHY6605	1.0m	10m	160	Diffused	T-1 3/4	3.0	10m	100m	30m	585n	5A%	High-efficiency	A	PD280k
36	TLSY5201	1.0m	10m	100	Diffused	T-1 3/4	3.0	20m	100m	30m	585n	5A%			PD628
37	HLMP6400	1m	10m	90		T-3/4	3.0	10m	120m	20m	583n	5A			PD180
38	HLMP6420	1.0m	10m	90		T-3/4	3.0	10m	120m	20m	583n	5A		A	PD180a
39	TLSY3401	1.0m	10m	100	Diffused	Triangular	3.0	10m	100m	30m	585n	5A%			PD1193
40	TLSY5401	1.0m	10m	100	Diffused	Triangular	3.0	10m	100m	30m	585n	5A%			PD630
41	MT130SLY	1.0m	15m	50	Transparent		2.8	20m	100m	25m	585n	27			PD258c
42	MT130Y	1.0m	15m	50	Transparent		2.8	20m	100m	25m	585n	27		A	PD1162
43	TLY108A	1.0m	15m	110	Transparent		2.8	20m	85m	30	585n	27		♦	PD1102 Ø
44	AND113Y	1.0m	15m	55	Jewel	T-1 3/4	2.8	20m	100m	25m	590n	57		A	PD215 Ø
45	TLY113A	1.0m	15m	50	Water-clear	T-1 3/4	2.8	20m	100m	25m	585n	27		A	PD422a Ø
46	CMD5377C	1.0m	20m	180	Diffused		3.0	20m	105m	35m	585m	5A		A	PD16aq
47	LED6286	1.0m	20m	50			3.0	20m	200m	60m	585n	5A			PD431a
48	LT5377B	1.0m	20m	180	Diffused		2.1	20m	105m	35m	585n	5A		B	PD50aa
49	MYB71D	1.0m	20m		Diffused		3.0	20m			585n				PD490b
50	OPL733	1.0m	20m	80			3.0	20m	120m	40m	585n	5A		A	PD257d
51	LDY5801	1.0m	20m	100	Diffused	Cylindrical	3.0	20m	200m	60m	590n	5A%	Tr/Tf 100ns Typ	♦	PD932 Ø
52	1N6093	1.0m	20m	70		Herm. Can	3.0	20m	120m	35m	580n	5A		B	PD84 Ø
53	558-0301-001	1.0m	20m			Panel-mount	3.0	10m	120m	20m	580n	5A		♦	PD990
54	558-0301-003	1.0m	20m			Panel-mount	3.0	10m	120m	20m	580n	5A		♦	PD990a
55	558-0301-004	1.0m	20m			Panel-mount	3.0	10m	120m	20m	580n	5A		♦	PD990b
56	558-0301-005	1.0m	20m			Panel-mount	3.0	10m	120m	20m	580n	5A		♦	PD990c
57	558-0301-006	1.0m	20m			Panel-mount	3.0	10m	120m	20m	580n	5A		♦	PD990d
58	558-0301-007	1.0m	20m			Panel-mount	3.0	10m	120m	20m	580n	5A		♦	PD990e
59	CMD569	1.0m	20m		Diffused	Rectangular	2.6	20m	120m	50m	585n	48			PD1151
60	CMD53124	1.0m	20m		Diffused	Rectangular	3.0	20m	105m	35m	585n	5A			PD319
61	LDY3801	1.0m	20m	100	Diffused	Rectangular	3.0	20m	200m	60m	590n	5A%	T-1 3/4 Size	♦	PD530 ⊘
62	LED3531	1.0m	20m	100	Diffused	Rectangular	3.0	20m	120m	30m	585n	5A			PD262g
63	MV53124	1.0m	20m			Rectangular	3.0	20m	105m	35m	585n	5A		B	PD319 ⊘
64	MYB61D	1.0m	20m		Diffused	Rectangular	3.0	20m			585n				PD262k
65	AY2651K	1.0m	20m		Diffused	Square	2.5	20m	125m	50m	580n	38			PD1380
66	LTL33251AA	1.0m	20m	100		Square	2.8	20m	60m	20m	585n	5A		♦	PD1233a
67	CMD53640	1.0m	20m	90	Diffused	T-1 1/2	3.0	20m	120m	30m	585n	5A		B	PD1150
68	MYB81D	1.0m	20m		Diffused	T-1 1/2	3.0	20m			585n				PD982
69	CMD5374C	1.0m	20m	90	Diffused	T-1 1/4	3.0	20m	105m	35m	585n	5A		A	PD16k
70	LDY1231	1.0m	20m	70	Diffused	T-1 3/4	3.0	20m	200m	60m	590n	5A%	Tr/Tf 100ns Typ	♦	PD586a Ø
71	LST733	1.0m	20m	80		T-1 3/4	3.0	20m	120m	40m	585n	5A		A	PD16ag
72	TLBY5400	1.0m	20m	80	Diffused	T-1 3/4			200m	30m	585n	47	Blink/Continuous		PD1000
73	TLBY5410	1.0m	20m	80	Diffused	T-1 3/4			200m	30m	585n	47	Blinking Freq 3Hz		PD1205
74	SAY2201	1.0m	20m		Water-clear	T-5/8	2.5	20m	100m	40m	580n	38		B	PD1110
75	SAY2221	1.0m	20m		Transparent	T-5/8	2.5	20m	100m	40m	580n	38		B	PD1110
76	LTL709Y	1.1m	10m	38	Diffused		2.8	20m	100m	30m	585n	5A	mini	A	PD1286
77	LTL10253W	1.1m	10m	60	Diffused		2.8	20m	60m	20m	585n	5A		A	PD1214
78	LTL6253LN	1.1m	10m	70		Arch	2.8	20m	60m	20m	585n	5A	Flat	A	PD1225
79	LTL653-1	1.1m	10m	60	Diffused	Panel-mount	2.8	20m	60m	20m	585n	5A	Cylindrical	B	PD1215
80	LTL553-11	1.1m	10m	60	Diffused	Side-mount	2.8	20m	60m	20m	585n	5A	Cylindrical	A	PD1216
81	LTL4251	1.1m	10m	40	Diffused	T-1	2.8	20m	60m	20m	585n	5A		♦	PD1212
82	LTL10253	1.1m	10m	60	Diffused	T-1 3/4	2.8	20m	60m	20m	585n	5A		A	PD1210b
83	HLMP4719	1.2m	2m	50	Diffused	T-1 1/2	2.7	2m	36m	7m	583n	5A			PD940a
84	GL3HY5	1.2m	10m				2.5	20m	50m	20m	585n	28			PD279
85	MT620Y	1.2m	10m	90	Transparent		2.8	20m	70m	25m	585n	27	For Backlighting	A	PD1350
86	SLP456B	1.2m†	20m		Diffused		2.1	20m	70m	25m	585n	28		♦	PD1305
87	TLY211	1.2m†	20m				2.8	20m	70m	25m	585n	27		A	PD1204 ⊘
88	SAY2434DEB	1.2m	20m		Diffused	Cylindrical	2.5	20m	125m	50m	580n	38		A	PD588
89	MT110Y	1.2m	20m		Diffused	Rectangular	2.8	20m	70m	25m	585n	27		A	PD1352
90	SAY5551REC	1.2m	20m		Diffused	Rectangular	2.5	20m	125m	50m	580n	38			PD1376
91	SAY5552REC	1.2m	20m		Diffused	Rectangular	2.5	20m	125m	50m	580n	38			PD1377
92	SAY5556REC	1.2m	20m		Diffused	Rectangular	2.5	20m	125m	50m	580n	38			PD1378
93	SAY5552TRI	1.2m	20m		Diffused	Triangular	2.5	20m	125m	50m	580n	38			PD1111
94	OSL31S	1.2m	40m	100			3.7	40m	150m	50m	580n	5A		A	PD58
95	OSL31	1.2m	40m	100		Low-dome	3.7	40m	150m	50m	580n	5A		A	PD59
96	OPL37	1.3m	10m		Diffused		2.5	10m	180m	50m	585n	28			PD257g
97	OPL37-1	1.3m	10m				2.5	10m	180m	50m	585n	28			PD257g
98	OPL37-2	1.3m	10m		Diffused		2.5	10m	180m	50m	585n	28			PD257g
99	OPL37-3	1.3m	10m		Water-clear		2.5	10m	180m	50m	585n	28			PD257g
100	LED1231	1.3m	10m		Diffused	Cylindrical	2.5	10m	180m	50m	585n	28		A	PD903
101	LED1232	1.3m	10m		Diffused	Cylindrical	2.5	10m	180m	50m	585n	28		A	PD903
102	LED1233	1.3m	10m		Water-clear	Cylindrical	2.5	10m	180m	50m	585n	28		A	PD903
103	LED1234	1.3m	10m		Water-clear	Cylindrical	2.5	10m	180m	50m	585n	28		A	PD903
104	LED1331	1.3m	10m		Diffused	Cylindrical	2.5	10m	180m	50m	585n	28		A	PD904
105	LED1332	1.3m	10m		Diffused	Cylindrical	2.5	10m	180m	50m	585n	28		A	PD904
106	LED1333	1.3m	10m		Water-clear	Cylindrical	2.5	10m	180m	50m	585n	28		A	PD904
107	LED1334	1.3m	10m		Water-clear	Cylindrical	2.5	10m	180m	50m	585n	28		A	PD904
108	LTL1252A	1.3m†	10m		Diffused	Cylindrical	2.8	20m			585n			A	PD1217
109	LED1032	1.3m	10m		Diffused	Rectangular	2.5	10m	180m	50m	585n	28		A	PD909a
110	LED1033	1.3m	10m		Water-clear	Rectangular	2.5	10m	180m	50m	585n	28		A	PD909a

SYMBOLS AND CODES EXPLAINED IN INTERPRETER

2. LED LAMPS - Yellow (Cont'd)

IN ORDER OF COLOR AND: (1) INTENSITY (2) IF TEST (3) BEAM ANGLE & (4) TYPE No.

LINE No.	4 TYPE NUMBER	1 LUMINOUS INTENSITY MIN (cd)	2 IF TEST (A)	3 BEAM ANGLE θ HI (°)	LENS TYPE	LAMP STYLE	VF MAX (V)	IF TEST (A)	PD RATED MAX (W)	IF RATED MAX (A)	PEAK WAVE-LENGTH λP (m)	TEMP. RANGE CODE - +	FEATURES	LEAD CODE	OUTLINE DRAWING
1	LED1034	1.3m	10m		Water-clear	Rectangular	2.5	10m	180m	50m	585n	28		A	PD909a
2	LED1431	1.3m	10m		Diffused	Rectangular	2.5	10m	180m	50m	585n	28		A	PD905
3	LED1432	1.3m	10m		Diffused	Rectangular	2.5	10m	180m	50m	585n	28		A	PD905
4	LED1433	1.3m	10m		Water-clear	Rectangular	2.5	10m	180m	50m	585n	28		A	PD905
5	LED1434	1.3m	10m		Water-clear	Rectangular	2.5	10m	180m	50m	585n	28		A	PD905
6	LED1631	1.3m	10m		Diffused	Rectangular	2.5	10m	180m	50m	585n	28		A	PD907
7	LED1632	1.3m	10m		Diffused	Rectangular	2.5	10m	180m	50m	585n	28		A	PD907
8	LED1633	1.3m	10m		Water-clear	Rectangular	2.5	10m	180m	50m	585n	28		A	PD907
9	LED1634	1.3m	10m		Water-clear	Rectangular	2.5	10m	180m	50m	585n	28		A	PD907
10	LED2031	1.3m	10m		Diffused	Rectangular	2.5	10m	180m	50m	585n	28		A	PD909
11	LED2032	1.3m	10m		Diffused	Rectangular	2.5	10m	180m	50m	585n	28		A	PD909
12	LED2033	1.3m	10m		Water-clear	Rectangular	2.5	10m	180m	50m	585n	28		A	PD909
13	LED2034	1.3m	10m		Water-clear	Rectangular	2.5	10m	180m	50m	585n	28		A	PD909
14	LED2131	1.3m	10m		Diffused	Rectangular	2.5	10m	180m	50m	585n	28		A	PD909b
15	LED2132	1.3m	10m		Diffused	Rectangular	2.5	10m	180m	50m	585n	28		A	PD909b
16	LED2133	1.3m	10m		Water-clear	Rectangular	2.5	10m	180m	50m	585n	28		A	PD909b
17	LED2134	1.3m	10m		Water-clear	Rectangular	2.5	10m	180m	50m	585n	28		A	PD909b
18	LED1931	1.3m	10m		Diffused	Square	2.5	10m	180m	50m	585n	28		A	PD908
19	LED1932	1.3m	10m		Diffused	Square	2.5	10m	180m	50m	585n	28		A	PD908
20	LED1933	1.3m	10m		Water-clear	Square	2.5	10m	180m	50m	585n	28		A	PD908
21	LED1934	1.3m	10m		Water-clear	Square	2.5	10m	180m	50m	585n	28		A	PD908
22	LED1831	1.3m	10m		Diffused	T-1 3/4	2.5	10m	180m	50m	585n	28			PD16a
23	LED1832	1.3m	10m		Diffused	T-1 3/4	2.5	10m	180m	50m	585n	28			PD16a
24	LED1833	1.3m	10m		Water-clear	T-1 3/4	2.5	10m	180m	50m	585n	28			PD16a
25	LED1834	1.3m	10m			T-1 3/4	2.5	10m	180m	50m	585n	28			PD16a
26	SDL37L1	1.3m	10m			T-1 3/4	2.5	10m	180m	50m	585n	28			PD16af
27	SDL37L2	1.3m	10m		Diffused	T-1 3/4	2.5	20m	180m	50m	585n	28			PD16af
28	SDL37L3	1.3m	10m		Water-clear	T-1 3/4	2.5	10m	180m	50m	585n	28			PD16af
29	SDL37L	1.3m	10m		Diffused	T-1 3/4	2.5	10m	180m	50m	585n	28			PD16af
30	LED1131	1.3m	10m		Diffused	Triangular	2.5	10m	180m	50m	585n	28		A	PD902
31	LED1132	1.3m	10m		Diffused	Triangular	2.5	10m	180m	50m	585n	28		A	PD902
32	LED1133	1.3m	10m		Water-clear	Triangular	2.5	10m	180m	50m	585n	28		A	PD902
33	LED1134	1.3m	10m		Water-clear	Triangular	2.5	10m	180m	50m	585n	28		A	PD902
34	LED1531	1.3m	10m		Diffused	Triangular	2.5	10m	180m	50m	585n	28		A	PD906
35	LED1532	1.3m	10m		Diffused	Triangular	2.5	10m	180m	50m	585n	28		A	PD906
36	LED1533	1.3m	10m		Water-clear	Triangular	2.5	10m	180m	50m	585n	28		A	PD906
37	LED1534	1.3m	10m		Water-clear	Triangular	2.5	10m	180m	50m	585n	28		A	PD906
38	HLMP1820	1.4m	10m	140	Diffused		3.0	10m	85m	20m	583n	5A			PD1338
39	HLMP-L351	1.4m	10m	140	Diffused		3.0	10m	85m	20m	583n	5A		A	PD1339
40	HLMP1620-010	1.5m		60	Diffused		7.5			15m	583n	48	Integ. Resistor		PD1057c
41	HLMP1620-101	1.5m		60	Diffused		7.5			15m	583n	48	Integ. Resistor		PD1057d
42	HLMP5070	1.5m		75	Diffused		7.5			15m	583n	48	Built-In Resistor		PD68d
43	HLMP1620	1.5m		60	Diffused	T-1	7.5				583n	48			PD77m
44	HLMP1621	1.5m		60	Diffused	T-1	15			20m	583n	48			PD77m
45	HLMP3650	1.5m		75	Diffused	T-1 1/2	7.5		75m	15m	585n	48	Built-In Resistor	B	PD940
46	HLMP3651	1.5m		75	Diffused	T-1 1/2	15			20m	583n	48	Built-In Resistor		PD940
47	LTL13259A	1.5m†	10m		Diffused	Rectangular	2.8	20m			585n			A	PD1231
48	MV53620	1.5m	10m	60		T-1	3.0	10m	120m	1.0	585n	5A			PD77m
49	MV53641	1.5m	10m	90		T-1	3.0	10m	120m	30m	585n	5A		B	PD77m
50	GL5HY5	1.5m	10m		Diffused	T-1 3/4	2.5	10m	50m	20m	585n	28		A	PD280a Ø
51	LTL5153	1.5m	10m	65	Diffused	T-1 3/4	2.8	20m	60m	20m	585n	5A		♦	PD1211
52	LTL5173	1.5m	10m	65	Diffused	T-1 3/4	2.8	20m	60m	20m	585n	5A		♦	PD1211
53	MV53154	1.5m	10m	80	Diffused	T-1 3/4	3.0	10m	105m	35m	585n	5A		B	PD47a Ø
54	MT2230Y	1.5m	15m	20	Transparent		2.8	20m	70m	25m	585n	27	Side View	A	PD915
55	TLY251	1.5m	15m				2.8	20m	140m	25m	590n	37		A	None
56	L411DY	1.5m	20m	100	Diffused		3.0	20m	80m	25m	585n	5A		B	PD174
57	L511DY	1.5m	20m	100	Diffused		3.0	20m	135m	30m	585n	5A			PD1298
58	LA5033D	1.5m	20m	15	Water-clear		2.0	10m			585n			A	PD1247e
59	LA5533D	1.5m	20m	25	Water-clear		2.0	10m			585n			A	PD1249
60	SLP444B	1.5m†	20m		Diffused		2.1	20m	70m	25m	585n	28		A	PD1313
61	SLP446B	1.5m†	20m		Diffused		2.1	20m	70m	25m	585n	28		A	PD1314
62	SLP454B	1.5m†	20m		Diffused		2.1	20m	70m	25m	585n	28		A	PD1302
63	SLP459B	1.5m†	20m		Diffused		2.1	20m	70m	25m	585n	28		A	PD1306
64	SLP461B	1.5m†	20m		Diffused		2.1	20m	70m	25m	585n	28		A	PD1299a
65	SLP462B	1.5m†	20m		Diffused		2.1	20m	70m	25m	585n	28		A	PD1300b
66	SLP473B01	1.5m†	20m		Diffused		2.1	20m	70m	25m	585n	28		A	PD1308
67	SLP474B	1.5m†	20m		Diffused		2.1	20m	70m	25m	585n	28		A	PD489b
68	TLY250	1.5m	20m				2.8	30m	85m	30m	585n	37		A	PD493
69	AY3665S	1.5m	20m		Transparent	Cylindrical	2.5	20m	125m	50m	580n	38	Lens:Pale Yellow		PD1395
70	PY3665S	1.5m	20m		Transparent	Cylindrical	2.5	20m	125m	50m	570n	38	Lens:Pale Yellow		PD1395
71	SAY2531DEB	1.5m	20m		Diffused	Cylindrical	2.5	20m	125m	50m	580n	38		A	PD589
72	HLMP0400	1.5m	20m	100	Diffused	Rectangular	3.0	20m	85m	30m	583n	5A		A	PD262 ⊠
73	SAY4652REC	1.5m	20m		Diffused	Rectangular	2.5	20m	125m	50m	580n	38			PD1375
74	AND740Y	1.5m†	20m		Transparent	T-1	3.0	20m	120m	20m	580n	48			PD257b Ø
75	AND743Y	1.5m†	20m		Water-clear	T-1	3.0	20m	120m	20m	580n	48			PD257b Ø
76	AND744Y	1.5m†	20m		Diffused	T-1	3.0	20m	120m	20m	580n	48			PD257b Ø
77	AND746Y	1.5m†	20m		Milk-white	T-1	3.0	20m	120m	20m	580n	48			PD257b Ø
78	NSL5386	1.5m	20m	60	Diffused	T-1	3.0	20m	110m	30m	585n	5A		B	PD77 Ø
79	SLP414B	1.5m†	20m		Diffused	T-1	2.1	20m	70m	30m	585n	2A		A	PD1061
80	CMD53641	1.5m	20m	90	Diffused	T-1 1/2	3.0	20m	120m	30m	585n	5A		B	PD1150
81	AND750Y	1.5m†	20m		Transparent	T-1 3/4	3.0	20m	120m	20m	580n	48		A	PD16y Ø
82	AND753Y	1.5m†	20m		Water-clear	T-1 3/4	3.0	20m	120m	20m	580n	48		A	PD16y Ø
83	AND754Y	1.5m†	20m		Diffused	T-1 3/4	3.0	20m	120m	20m	580n	48		A	PD16y Ø
84	ED700Y	1.5m	20m		Transparent	T-1 3/4	3.0	20m	120m	20m	580n	48		B	PD392
85	MV53	1.5m†	50m			T-3/4	4.5	50m	225m	50m	589n	5A		B	PD36c
86	CQV82L3(A)	1.6m	10m	100	Diffused		3.0	10m	90m%	30m	590n	A §	Octagonal	A	PD262m
87	TLHY8400	1.6m	10m	35	Diffused		3.0	20m	100m	30m	585n	XA§	High-efficiency	B	None
88	CQX12III	1.6m	10m	40		Arch	3.0	10m	120m	30m	590n	5A%		A	PD431
89	TLYY5200	1.6m	10m		Transparent	Cylindrical	3.0	20m	100m	30m	585n	XA§	For Fiber Optics		PD1385
90	CQW62-3(A)	1.6m	10m	110	Diffused	Panel-mount	3.0	10m	90m%	30m	590n	A §		A	PD1082 ⊠
91	CQW62L3(A)	1.6m	10m	110	Diffused	Panel-mount	3.0	10m	90m%	30m	590n	A §		A	PD1084 ⊠
92	CQV72-3(A)	1.6m	10m	100	Diffused	Rectangular	3.0	10m	90m%	30m	590n	A §		A	PD1085 ⊠
93	CQV72L3(A)	1.6m	10m	100	Diffused	Rectangular	3.0	10m	90m%	30m	590n	A §		A	PD1086 ⊠
94	CQW12B3(A)	1.6m	10m	100	Diffused	Rectangular	3.0	10m	90m%	30m	590n	A §		A	PD922 ⊠
95	CQW12BL3(A)	1.6m	10m	100	Diffused	Rectangular	3.0	10.m	90m%	30m	590n	A §		A	PD922 ⊠
96	CQS86L3	1.6m	10m	70	Diffused	T-1	2.6	10m	90m	30m	590n	A §		A	PD15e Ø
97	CQS97-3	1.6m	10m	60	Diffused	T-1	2.8	20m	90m%	30m	590n	A §		A	PD322c Ø
98	CQS97E	1.6m	10m	50	Diffused	T-1	2.8	20m	90m%	30m	590n	A §		A	PD1171 Ø
99	CQS97L	1.6m	10m	50	Diffused	T-1	2.8	20m	90m%	30m	590n	A §		A	PD1172 Ø
100	CQY96-3	1.6m	10m	70	Diffused	T-1	3.0	10m	90m%	30m	590n	A §		A	PD232j Ø
101	CQY96L3(A)	1.6m	10m	70	Diffused	T-1	3.0	10m	90	30m	590n	A §		A	PD232k Ø
102	TLHY4603(A)	1.6m	10m	120	Diffused	T-1	3.0	10m	100m	30m	585n	5A%	High-efficiency		PD1190
103	TLHY4605(A)	1.6m	10m	120	Diffused	T-1	3.0	10m	100m	30m	585n	5A%	High-efficiency		PD1190
104	TLHY5401	1.6m	10m	60	Diffused	T-1 3/4	3.0	20m	100m	30m	585n	5A%		A	PD280k
105	TLHY5402	1.6m	10m	60	Diffused	T-1 3/4	3.0	20m	100m	30m	585n	5A%		A	PD280k
106	TLHY6401	1.6m	10m	60	Diffused	T-1 3/4	3.0	10m	100m	30m	585n	5A%	High-efficiency	A	PD280k
107	TLHY6402	1.6m	10m	60	Diffused	T-1 3/4	3.0	10m	100m	30m	585n	5A%	High-efficiency	A	PD280k
108	521-9174	1.6m	20m	100	Diffused		3.0	20m	120m	50m	580n	5A		A	PD50c Ø
109	521-9176	1.6m	20m	100	Diffused		3.0	20m	120m	50m	580n	5A		A	PD52c Ø
110	521-9254	1.6m	20m	45			3.0	20m	120m	50m	580n	5A		A	PD50c Ø

SYMBOLS AND CODES EXPLAINED IN INTERPRETER

2. LED LAMPS - Yellow (Cont'd)

IN ORDER OF COLOR AND: (1) INTENSITY (2) IF TEST (3) BEAM ANGLE & (4) TYPE No.

LINE No.	4 TYPE NUMBER	1 LUMINOUS INTENSITY MIN (cd)	2 IF TEST (A)	3 BEAM ANGLE θ HI (°)	LENS TYPE	LAMP STYLE	VF MAX (V)	IF TEST (A)	PD RATED MAX (W)	IF RATED MAX (A)	PEAK WAVE-LENGTH λP (m)	TEMP. RANGE CODE - +	FEATURES	LEAD CODE	OUTLINE DRAWING
1	550-0304	1.6m†	20m	70	Diffused		3.0	20m	120m	35m	570n	5A		A	PD66 ☑
2	550-0305	1.6m†	20m	70	Diffused		3.0	20m	120m	50m	570n	5A		A	PD67 ☑
3	LDY5802	1.6m	20m	100	Diffused	Cylindrical	3.0	20m	200m	60m	590n	5A%	Tr/Tf 100ns Typ	♦	PD932 Ø
4	559-0301-001	1.6m	20m			Panel-mount	3.0	20m	120m	30m	580n	5A		♦	PD991
5	559-0301-003	1.6m	20m			Panel-mount	3.0	20m	120m	30m	580n	5A		♦	PD991a
6	559-0301-004	1.6m	20m			Panel-mount	3.0	20m	120m	30m	580n	5A		♦	PD991b
7	559-0301-005	1.6m	20m			Panel-mount	3.0	20m	120m	30m	580n	5A		♦	PD991c
8	559-0301-006	1.6m	20m			Panel-mount	3.0	20m	120m	30m	580n	5A		♦	PD991d
9	559-0301-007	1.6m	20m			Panel-mount	3.0	20m	120m	30m	580n	5A		♦	PD991e
10	LDY3802	1.6m	20m	100	Diffused	Rectangular	3.0	20m	200m	60m	590n	5A%	T-1 3/4 Size	♦	PD530 ☑
11	550-0306	1.6m	20m	70	Diffused	Side-mount	3.0	20m	120m	50m	570n	5A		A	PD68 ☑
12	LLL29-1	1.6m	25m	18	Water-clear	T-1	3.6	25m	150m	40m	580n	48		A	PD54 Ø
13	MSL29-1	1.6m	25m	18	Water-clear	T-1	3.6	25m	150m	40m	580n	48		A	PD55 Ø
14	CQY97A3(A)	1.6m	10	60	Diffused	T-1	3.0	10m	90m%	30m	590n	A §		A	PD77 Ø
15	SLP465B	1.7m†	20m		Diffused		2.1	20m	70m	25m	585n	28		A	PD1302a
16	SEL1710K	1.8m	10m		Water-clear	T-1 3/4	2.5	10m		30m	570n	28		A	PD280e
17	MT263Y	1.8m	15m	130	Transparent		2.8	20m	70m	25m	585n	27	For Backlighting	A	PD1349
18	LDY2320	1.8m†	20m	70	Water-clear	Rectangular	3.0	20m	200m	30m	590n	5A%	Surface Mount LED	J	PD1140 ☑
19	521-9208	2.0m†					2.0	10m		35m	580n			A	PD208 Ø
20	OPL312	2.0m†		150	Diffused		2.5	20m		50m	585n				PD987 Ø
21	LLL37	2.0m†		30	Diffused	T-1	2.4	25m		40m	585n				PD54 Ø
22	OPL1213	2.0m†		150	Diffused	T-1	2.5	20m		50m	585n				PD15C Ø
23	HLMP1401-010	2.0m	10m	60	Diffused		3.0	10m	85m	20m	583n	5A			PD1057c
24	HLMP1401-101	2.0m	10m	60	Diffused		3.0	10m	85m	20m	583n	5A			PD1057d
25	NSC554Y	2.0m	10m	24	Transparent		2.8	10m	115m	35m	585n	5A		A	PD18c Ø
26	YL56	2.0m	10m	40	Diffused	Arch	3.5	20m	80m	25m	585n	5A%	Miniature Axial	♦	PD174
27	LDY1132	2.0m	10m	70	Diffused	T-1	3.0	20m	200m	60m	590n	5A%	Tr/Tf 200ns Typ	B	PD16al Ø
28	LTL252	2.0m†	10m		Transparent	T-1	2.8	20m			585n			A	PD1236
29	HLMP3400	2m	10m	90		T-1 3/4	3.0	10m	85m	20m	583n	5A			PD16a
30	LTL4253	2.0m	10m	36	Diffused	T-1 3/4	2.8	20m	60m	20m	585n	5A		♦	PD1211
31	NSC526Y2	2.0m	10m	70	Diffused	T-1 3/4	2.8	10m	115m	35m	585n	5A		A	PD18d Ø
32	NSC5569Y2	2.0m	10m	30	Diffused	T-1 3/4	2.8	10m	110m	30m	585n	5A		B	PD16ad Ø
33	547-2401	2.0m	20m				3.0	20m		25m	583n	5A			PD378
34	555-2401	2.0m†	20m				3.0	20m		25m	583n	5A			None
35	L311DY	2.0m	20m	60	Diffused		3.0	10m	120m	30m	585n	5A			PD77q
36	L613DY	2.0m	20m	90			3.0	10m	120m	30m	585n	5A	Stackable		PD1056a
37	MV5377C	2.0m†	20m	180			3.0	20m	105m	35m	585n	5A		A	PD16e Ø
38	MYC31D	2.0m	20m		Diffused		3.0	20m			585n				PD50ac
39	OPL73	2.0m	20m	80			3.0	20m	100m	50m	585n	5A			PD257f
40	SAY5531REC	2.0m	20m		Diffused		2.5	20m	125m	50m	580n	38		A	PD489c
41	SLP441B	2.0m†	20m		Diffused		2.1	20m	70m	25m	585n	28		A	PD1299
42	SLP451B	2.0m†	20m		Diffused		2.1	20m	70m	25m	585n	28		A	PD1300
43	SLP453B	2.0m†	20m		Diffused		2.1	20m	70m	25m	585n	28		A	PD1301
44	SLP455B	2.0m†	20m		Diffused		2.1	20m	70m	25m	585n	28		A	PD1300a
45	SLP471D	2.0m†	20m		Milk-white		2.1	20m	70m	25m	585n	28		♦	PD1307
46	SLP475B	2.0m†	20m		Diffused		2.1	20m	70m	25m	585n	28		A	PD1316
47	SLP477B	2.0m†	20m		Diffused		2.1	20m	70m	25m	585m	28		A	PD1318
48	SLP478C	2.0m†	20m		Transparent		2.1	20m	70m	25m	585n	28		A	PD489d
49	SAY4632REC	2.0m	20m		Diffused	Rectangular	2.5	20m	125m	50m	580n	38			PD909c
50	SAY5532REC	2.0m	20m		Diffused	Rectangular	2.5	20m	125m	50m	580n	38			PD909c
51	SPY4652REC	2.0m	20m		Diffused	Rectangular	2.5	20m	125m	50m	570n	38			PD1375
52	SPY5551REC	2.0m	20m		Diffused	Rectangular	2.5	20m	125m	50m	570n	38			PD1376
53	SPY5552REC	2.0m	20m		Diffused	Rectangular	2.5	20m	125m	50m	570n	38			PD1377
54	ORL733L	2.0m	20m	40		Side-mount	3.0	20m	120m	35m	585n	5A			PD507 Ø
55	SAY3531SQR	2.0m	20m		Diffused	Square	2.5	20m	125m	50m	580n	38			PD1381
56	MY32D	2.0m	20m		Diffused	T-1	3.0	20m			585n				PD77h
57	LST733L	2.0m	20m	40		T-1 3/4	3.0	20m	120m	40m	585n	5A		A	PD18a
58	MY52D	2.0m	20m		Diffused	T-1 3/4	3.0	20m			585n				PD258a
59	SPY2201	2.0m	20m		Water-clear	T-5/8	2.5	20m	100m	40m	570n	38		B	PD1110
60	SPY2221	2.0m	20m		Transparent	T-5/8	2.5	20m	100m	40m	570n	38		B	PD1110
61	SAY5532TRI	2.0m	20m		Diffused	Triangular	2.5	20m	125m	50m	580n	38		A	PD1111
62	SPY5552TRI	2.0m	20m		Diffused	Triangular	2.5	20m	125m	50m	570n	38			PD1111
63	521-9265	2.0m	25m	100		Rectangular	3.0	25m	120m	20m	583n	5A			PD262
64	TIL212-2	2.1m	20m	60	Diffused	T-1	3.2	20m		50m	580n	5A		♦	PD16ae
65	550-2304	2.2m	10m				3.0	10m	105m	35m	585n	5A			PD66b ☑
66	550-2305	2.2m	10m				3.0	10m	105m	35m	585n	5A			PD67b ☑
67	559-2301-001	2.2m	10m			Panel-mount	3.0	10m	105m	35m	585n	5A		♦	PD991
68	559-2301-003	2.2m	10m			Panel-mount	3.0	10m	105m	35m	585n	5A		♦	PD991a
69	559-2301-004	2.2m	10m			Panel-mount	3.0	10m	105m	35m	585n	5A		♦	PD991b
70	559-2301-005	2.2m	10m			Panel-mount	3.0	10m	105m	35m	585n	5A		♦	PD991c
71	559-2301-006	2.2m	10m			Panel-mount	3.0	10m	105m	35m	585n	5A		♦	PD991d
72	559-2301-007	2.2m	10m			Panel-mount	3.0	10m	105m	35m	585n	5A		♦	PD991e
73	561-2301-050	2.2m	10m	65	Diffused	Panel-mount	3.0	10m	105m	35m	585n	5A			PD1017
74	561-2301-060	2.2m	10m	65	Diffused	Panel-mount	3.0	10m	105m	35m	585n	5A			PD1017a
75	561-2301-070	2.2m	10m	65	Diffused	Panel-mount	3.0	10m	105m	35m	585n	5A			PD1017b
76	561-2301-080	2.2m	10m	65	Diffused	Panel-mount	3.0	10m	105m	35m	585n	5A			PD1017c
77	561-2301-090	2.2m	10m	65	Diffused	Panel-mount	3.0	10m	105m	35m	585n	5A			PD1017d
78	561-2301-100	2.2m	10m	65	Diffused	Panel-mount	3.0	10m	105m	35m	585n	5A			PD1017e
79	CQV62II(A)	2.2m	10m	110		Rectangular	3.0	10m	90m	30m	590n	5A%			PD1082
80	CQV62L-II(A)	2.2m	10m	110		Rectangular	3.0	10m	90m	30m	590n	5A%			PD1084
81	550-2306	2.2m	10m			Side-mount	3.0	10m	105m	35m	585n	5A			PD68b ☑
82	521-9248	2.2m	10m	90	Diffused	T-1 1/2	3.0	10m	120m	20m	585n	5A		A	PD62c Ø
83	CMD5353-2	2.2m	10m	65	Diffused	T-1 3/4	3.0	20m	105	35m	585n	5A		A	PD16ao Ø
84	LTL33251A	2.5m†	10m		Diffused		2.8	20m			585n			A	PD1233
85	MV53642	2.5m	10m	90		T-1	3.0	10m	120m	30m	585n	5A		B	PD77m
86	TLHY4200	2.5m	10m	22	Transparent	T-1	3.0	20m	100m	30m	585n	5A%	High-efficiency		PD1190
87	HLMP3450	2.5m	10m	50	Diffused	T-1 3/4	3.0	10m	85m	20m	583n	5A		B	PD392
88	LDY5062	2.5m	10m	70	Diffused	T-1 3/4	3.0	20m	200m	60m	590n	5A%	Tr/Tf 200ns Typ	B	PD16ak Ø
89	LDY5162	2.5m	10m	70	Diffused	T-1 3/4	3.0	20m	200m	60m	590n	5A%	Tr/Tf 200ns Typ	B	PD16ak Ø
90	LTL5174	2.5m	10m	40	Transparent	T-1 3/4	2.8	20m	60m	20m	585n	5A		♦	PD1211
91	TLHY5403	2.5m	10m	60	Diffused	T-1 3/4	3.0	20m	100m	30m	585n	5A%		A	PD280k
92	TLHY6403	2.5m	10m	60	Diffused	T-1 3/4	3.0	10m	100m	30m	585n	5A%	High-efficiency	A	PD280k
93	L39UR-Y2-2116	2.5m	20m		Fresnel		3.0	20m	120m	30m	585n	5A			PD398b
94	L39UR-Y2-2316	2.5m	20m		Fresnel		3.0	20m	120m	30m	585n	5A			PD398c
95	L39UR-Y6-2116	2.5m	20m		Fresnel		7.0	20m	120m	30m	585n	5A			PD398b
96	L39UR-Y6-2316	2.5m	20m		Fresnel		7.0	20m	120m	30m	585n	5A			PD398c
97	L39UR-Y12-2116	2.5m	20m		Fresnel		14	20m	120m	30m	585n	5A			PD398b
98	L39UR-Y12-2316	2.5m	20m		Fresnel		14	20m	120m	30m	585n	5A			PD398c
99	L39UR-Y24-2116	2.5m	20m		Fresnel		26	20m	120m	30m	585n	5A			PD398b
100	L39UR-Y24-2316	2.5m	20m		Fresnel		26	20m	120m	30m	585n	5A			PD398c
101	L41EN-Y2-2116	2.5m	20m		Diffused		3.0	20m	120m	30m	585n	5A			PD398f
102	L41EN-Y6-2116	2.5m	20m		Diffused		7.0	20m	120m	30m	585n	5A			PD398f
103	L41EN-Y12-2116	2.5m	20m		Diffused		14	20m	120m	30m	585n	5A			PD398f
104	L41EN-Y24-2116	2.5m	20m		Diffused		14	20m	120m	30m	585n	5A			PD398f
105	L111DY	2.5m	20m	60	Diffused		3.0	20m	120m	30m	585n	5A		A	PD50t
106	L611DY	2.5m	20m	65			3.0	20m	120m	30m	585n	5A	Stackable		PD1056a
107	L612DY	2.5m	20m	60	Diffused		3.0	20m	120m	30m	595n	5A	Stackable		PD1060
108	L615DY	2.5m	20m	60	Diffused		3.0	20m	120m	30m	585n	5A	Stackable		PD1057a
109	LM611DY	2.5m	20m	60	Diffused		3.0	20m	120m	30m	585n	5A	Stackable		PD1056a
110	LST5353	2.5m	20m	65	Diffused		3.0	20m	120m	35m	585n	5A		A	PD50r Ø

SYMBOLS AND CODES EXPLAINED IN INTERPRETER

2. LED LAMPS - Yellow (Cont'd)

IN ORDER OF COLOR AND: (1) INTENSITY (2) IF TEST (3) BEAM ANGLE & (4) TYPE No.

LINE No.	4 TYPE NUMBER	1 LUMINOUS INTENSITY MIN (cd)	2 IF TEST (A)	3 BEAM ANGLE θ HI (°)	LENS TYPE	LAMP STYLE	VF MAX (V)	IF TEST (A)	PD RATED MAX (W)	IF RATED MAX (A)	PEAK WAVE-LENGTH λP (m)	TEMP. RANGE CODE - +	FEATURES	LEAD CODE	OUTLINE DRAWING
1	LST5353R5	2.5m	20m	65			5	20m	120m	35m	585n	5A	Built-In Resistor		PD50r Ø
2	LST5353R10	2.5m	20m	65			10	20m	120m	35m	585n	5A	Built-In Resistor		PD50r Ø
3	LDY5803	2.5m	20m	100	Diffused	Cylindrical	3.0	20m	200m	60m	590n	5A%	Tr/Tf 100ns Typ	♦	PD932 Ø
4	LDY3803	2.5m	20m	100	Diffused	Rectangular	3.0	20m	200m	60m	590n	5A%	T-1 3/4 Size	♦	PD530 ⊠
5	ORL5353	2.5m	20m	65		Side-mount	3.0	20m	120m	35m	585n	5A			PD507 Ø
6	CMD53642	2.5m	20m	90	Diffused	T-1 1/2	3.0	20m	120m	30m	585n	5A		B	PD1150
7	CMD5353	2.5m	20m	65	Diffused	T-1 3/4	3.0	20m	105	35m	585n	5A		A	PD16ao Ø
8	LST4353	2.5m	20m	80	Diffused	T-1 3/4	3.0	20m	120m	40m	585n	5A		A	PD16ag
9	LA10031	2.7m	20m		Diffused		2.0	10m			585n			A	PD1275
10	L45RN-Y2-2116	3.0m†			Fresnel	Panel-mount	2.5	35m	100m	35m		5A			PD399a Ø
11	L45RN-Y2-2316	3.0m†			Fresnel	Panel-mount	2.5	35m	100m	35m		5A			PD399 Ø
12	L45RN-Y6-2116	3.0m†			Fresnel	Panel-mount	6.0	35m	100m	35m		5A			PD399a Ø
13	L45RN-Y6-2316	3.0m†			Fresnel	Panel-mount	6.0	35m	100m	35m		5A			PD399 Ø
14	L45RN-Y12-2116	3.0m†			Fresnel	Panel-mount	12	35m	100m	35m		5A			PD399a Ø
15	L45RN-Y12-2316	3.0m†			Fresnel	Panel-mount	12	35m	100m	35m		5A			PD399 Ø
16	L45RN-Y24-2116	3.0m†			Fresnel	Panel-mount	24	35m	100m	35m		5A			PD399a Ø
17	L45RN-Y24-2316	3.0m†			Fresnel	Panel-mount	24	35m	100m	35m		5A			PD399 Ø
18	HLMP5040	3.0m	10m	75	Diffused		3.0	10m	85m	20m	583n	5A			PD68c
19	CQX12IV	3.0m	10m	40		Arch	3.0	10m	120m	30m	590n	5A%		A	PD431
20	CQS86L4	3.0m	10m	70	Diffused	T-1	2.6	10m	90m	30m	590n	A §		A	PD15e Ø
21	CQS97E4	3.0m	10m	50	Diffused	T-1	2.8	20m	90m%	30m	590n	A §		A	PD1171 Ø
22	CQS97L4	3.0m	10m	50	Diffused	T-1	2.8	20m	90m%	30m	590n	A §		A	PD1172 Ø
23	CQW97A	3.0m	10m	60	Transparent	T-1	3.0	10m	90m%	30m	590n	A §		A	PD77 Ø
24	CQX74D(A)	3.0m	10m	30	Transparent	T-1	3.0	10m	90m%	30m	590n	A §		A	PD232j Ø
25	CQY96-4	3.0m	10m	70	Diffused	T-1	3.0	10m	90m%	30m	590n	A §		A	PD232j Ø
26	CQY96L4(A)	3.0m	10m	70	Diffused	T-1	3.0	10m	90	30m	590n	A §		A	PD232k Ø
27	CQY97A4(A)	3m	10m	70	Diffused	T-1	3.0	10m	90m%	30m	590n	A §		A	PD77 Ø
28	LTL251	3.0m†	10m		Diffused	T-1	2.8	20m			585n			A	PD1236
29	MV53621	3.0m	10m	60		T-1	3.0	10m	120m	1.0	585n	5A			PD77m
30	MV53152	3.0m	10m	70	Water-clear	T-1 3/4	3.0	10m	105m	35m	585n	5A		B	PD47a Ø
31	TLPY144	3.m	15m	34	Diffused		2.8	20m	70m	25m	570n	27		♦	PD1101a Ø
32	LST5354	3.0m	20m	24	Diffused		3.0	20m	120m	35m	585n	5A		A	PD50r Ø
33	LST5354R5	3.0m	20m	24			5	20m	120m	35m	585n	5A	Built-In Resistor		PD50r Ø
34	LST5354R10	3.0m	20m	24			10	20m	120m	35m	585n	5A	Built-In Resistor		PD50r Ø
35	MYB52D	3.0m	20m		Diffused		3.0	20m			585n				PD50n
36	MYB52W	3.0m	20m		Diffused		3.0	20m			585n				PD50n
37	SLF402B	3.0m†	20m		Diffused		2.2	20m	70m	30m	585m	27		♦	PD1332
38	SLP464B	3.0m†	20m		Diffused		2.1	20m	70m	25m	565n	28		A	PD1293h
39	SPY5531REC	3.0m	20m		Diffused		2.5	20m	125m	50m	570n	38		A	PD489c
40	AY5562X	3.0m	20m			Cylindrical	2.5	20m	125m	50m	580n	38			PD1394
41	PY5562X	3.0m	20m			Cylindrical	2.5	20m	125m	50m	570n	38			PD1394
42	HLMP0401	3.0m	20m	100	Diffused	Rectangular	3.0	20m	85m	30m	583n	5A		A	PD262 ⊠
43	SPY4632REC	3.0m	20m		Diffused	Rectangular	2.5	20m	125m	50m	570n	38			PD909c
44	SPY5532REC	3.0m	20m		Diffused	Rectangular	2.5	20m	125m	50m	570n	38			PD909c
45	ORL5354	3.0m	20m	24		Side-mount	3.0	20m	120m	35m	585n	5A			PD507 Ø
46	SY941D	3.0m	20m		Diffused	Square	2.6	20m	100m	40m	570n	4A%	Max Vr 5V	A	PD1374
47	TLPY164	3.0m†	20m		Diffused	T-1	2.8	20m	70m	25m	570n	27		A	PD1203 Ø
48	LST4354	3.0m	20m	65	Diffused	T-1 3/4	3.0	20m	120m	40m	585n	5A		A	PD16ag
49	MT550Y	3.0m	20m	50	Transparent	T-1 3/4	5.4	20m	160m	30m	585n	27	2Chip	♦	PD1211
50	MY52W	3.0m	20m		Diffused	T-1 3/4	3.0	20m			585n				PD258a
51	SPY5532TRI	3.0m	20m		Diffused	Triangular	2.5	20m	125m	50m	570n	38		A	PD1111
52	SEL2710Y	3.2m	10m	100	Diffused	T-1	2.5	10m	90m	30m	570n	3A		A	PD322
53	549-0301	3.2m†	20m	70	Diffused	T-1 3/4	3.0	20m	120m	30m	585n	4A		A	PD379 Ø
54	TLY253	3.4m	15m		Diffused		2.8	20m	70m	30m	585n	27		A	None
55	CQN12	3.5m⊠	10m	100	Transparent	Rectangular	2.2	20m		30m	590n				PD1081
56	CQV62III(A)	3.5m	10m	110		Rectangular	3.0	10m	90m	30m	590n	5A%			PD1082
57	CQV62L-III(A)	3.5m	10m	110		Rectangular	3.0	10m	90m	30m	590n	5A%			PD1084
58	LTL4252	3.5m	10m	20	Transparent	T-1	2.8	20m	60m	20m	585n	5A		♦	PD1212
59	HLMP-M350	3.6m	10m	80	Transparent		3.0	10m	85m	20m	583n	5A			PD1342
60	SEL2710K	3.6m	10m	40	Water-clear		2.5	10m	90m	30m	570n	3A		A	PD322 Ø
61	HLMP-M300	3.6m	20m	135	Diffused		3.0	10m	85m	20m	583n	5A			PD1342
62	LLL47	4.0m†		30	Diffused	T-1	2.4	25m		40m	690n				PD54 Ø
63	MSL37	4.0m†		30	Diffused	T-1	2.4	25m		40m	585n				PD55 Ø
64	OPL273	4.0m†		80	Diffused	T-1	2.5	20m		50m	585n				PD16ae Ø
65	OPL1273	4.0m†		80	Diffused	T-1	2.5	20m		50m	585n				PD15C Ø
66	LDY1133	4.0m	10m	70	Diffused	T-1	3.0	20m	200m	60m	590n	5A%	Tr/Tf 200ns Typ	B	PD16al Ø
67	TLHY4100	4.0m	10m	22	Water-clear	T-1	3.0	20m	100m	50m	585n	5A%	For DC/Pulse Op		PD1190
68	TLHY4201	4.0m	10m	22	Transparent	T-1	3.0	20m	100m	30m	585n	5A%	High-efficiency		PD1190
69	TLHY4202	4.0m	10m	22	Transparent	T-1	3.0	20m	100m	30m	585n	5A%	High-efficiency		PD1190
70	TLHY4405	4.0m	10m	60	Diffused	T-1	3.0	10m	100m	30m	585n	5A%	High-efficiency		PD1190
71	HLMP3401	4m	10m	90		T-1 3/4	3.0	10m	85m	20m	583n	5A			PD16a
72	LDY5163	4.0m	10m	70	Diffused	T-1 3/4	3.0	20m	200m	60m	590n	5A%	Tr/Tf 200ns Typ	B	PD16ak Ø
73	TLHY5200	4.0m	10m	14	Transparent	T-1 3/4	3.0	20m	100m	30m	585n	5A%	High-efficiency	A	PD280k
74	TLHY5405	4.0m	10m	60	Diffused	T-1 3/4	3.0	20m	100m	30m	585n	5A%		A	PD280k
75	TLHY6200	4.0m	10m	28	Transparent	T-1 3/4	3.0	20m	100m	30m	585n	5A%	High-efficiency	A	PD280k
76	TLHY6405	4.0m	10m	60	Diffused	T-1 3/4	3.0	10m	100m	30m	585n	5A%	High-efficiency	A	PD280k
77	MV5374C	4.0m†	20m	90			3.0	20m	105m	35m	585n	5A		A	PD16c Ø
78	MV53123	4.0m	20m	100		Rectangular	3.0	20m	105m	35m	585n	5A			PD262h
79	TLY147	4.5m†	15m		Fresnel		2.8	20m	70m	25m	585n	27		A	PD1201 Ø
80	CMD53173	4.5m	20m		Diffused		2.5	20m	200m	35m	585n	48			PD473
81	MV53173	4.5m	20m				2.5	20m	200m	1.0	585n	48		♦	PD473
82	OP004-260	4.5m†	40m		Diffused		2.6	40m	225m	80m					None
83	ORL26	4.5m†	40m		Diffused		2.6	40m	225m	80m					None
84	CQS97E5	5.0m	10m	50	Diffused	T-1	2.8	20m	90m%	30m	590n	A §		A	PD1171 Ø
85	CQS97L5	5.0m	10m	50	Diffused	T-1	2.8	20m	90m%	30m	590n	A §		A	PD1172 Ø
86	CQW97A5	5.0m	10m	60	Transparent	T-1	3.0	10m	90m%	30m	590n	A §		A	PD77 Ø
87	CQX74D5(A)	5.0m	10m	30	Transparent	T-1	3.0	10m	90m%	30m	590n	A §		A	PD232j Ø
88	CQY96-5	5.0m	10m	70	Diffused	T-1	3.0	10m	90m%	30m	590n	A §		A	PD232j Ø
89	CQY96L5(A)	5.0m	10m	70	Diffused	T-1	3.0	10m	90	30m	590n	A §		A	PD232k Ø
90	LTL10254	5.0m	10m	34	Transparent	T-1 3/4	2.8	20m	60m	20m	585n	5A		A	PD1210b
91	SY915D	5.0m	10m		Diffused	T-1 3/4	2.5	10m	100m	40m	570n	4A%	Max IF 40mA,Vr 5V	A	PD1373b
92	SY915T	5.0m	10m		Transparent	T-1 3/4	2.5	10m	100m	40m	570n	4A%	Max IF 40mA,Vr 5V	A	PD1373b
93	MT221Y	5.0m†	15m		Transparent	Rectangular	2.8	20m	70m	25m	585n	27			PD1356
94	MT440Y	5.0m	15m	30	Diffused	T-1 3/4	2.8	20m	70m	25m	585n	27		♦	PD1199
95	MYB52C	5.0m	20m		Transparent		3.0	20m			585n				PD50n
96	SLP435B	5.0m†	20m		Diffused		2.1	20m	70m	25m	565n	28		A	PD1293
97	SLP480C	5.0m†	20m		Transparent		2.1	20m	70m	25m	565n	28		A	PD1293g
98	SLP481B	5.0m†	20m		Diffused		2.1	20m	70m	25m	565n	28		A	PD1293k
99	MT640Y	5m	20m	20	Diffused	T-1	2.8	20m	70m	25m	585n	27		♦	PD1203
100	MY52C	5.0m	20m		Transparent	T-1 3/4	3.0	20m			585n				PD258a
101	CQY97A5(A)	5.0m	10	70	Diffused	T-1	3.0	10m	90m%	30m	590n	A §		A	PD77 Ø
102	HLMP-M351	5.7m	10m	80	Transparent		3.0	10m	85m	20m	583n	5A			PD1342
103	HLMP-M301	5.7m	20m	135	Diffused		3.0	10m	85m	20m	583n	5A			PD1342
104	5353R5	6.0m†		65		T-1 3/4	5.0	20m		35m	585n		Built-In Resistor		PD379
105	5353R10	6.0m†		65		T-1 3/4	10	20m		35m	585n		Built-In Resistor		PD379
106	HLMP1420	6m	10m	45			3.0	10m	85m	20m	583n	5A			PD77g
107	HLMP1421	6m	10m	45			3.0	10m	20m	20m	583n	5A			PD77g
108	NSC554Y6	6.0m	10m	24	Transparent		2.8	10m	115m	35m	585n	5A		A	PD18C Ø
109	LTL6253L	6.0m†	10m		Diffused	Arch	2.8	20m			585n			A	PD1225
110	HLMP1485	6.0m	10m	60	Diffused	T-1	3.0	10m	85m	20m	583n	5A		B	PD77m

SYMBOLS AND CODES EXPLAINED IN INTERPRETER

2. LED LAMPS - Yellow (Cont'd)

IN ORDER OF COLOR AND: (1) INTENSITY (2) IF TEST (3) BEAM ANGLE & (4) TYPE No.

LINE No.	4 TYPE NUMBER	1 LUMINOUS INTENSITY MIN (cd)	2 IF TEST (A)	3 BEAM ANGLE θ HI (°)	LENS TYPE	LAMP STYLE	VF MAX (V)	IF TEST (A)	PD RATED MAX (W)	IF RATED MAX (A)	PEAK WAVE-LENGTH λP (m)	TEMP. RANGE CODE - +	FEATURES	LEAD CODE	OUTLINE DRAWING
1	MV53622	6.0m	10m	60		T-1	3.0	10m	120m	1.0	585n	5A			PD77m
2	HLMP3451	6m	10m	50	Diffused	T-1 3/4	3.0	10m	85m	20m	583n	5A		B	PD392
3	HLMP3465	6m	10m	45		T-1 3/4	3.0	10m	85m	20m	583n	5A		B	PD392
4	LTL5154	6.0m	10m	40	Transparent	T-1 3/4	2.8	20m	60m	20m	585n	5A		♦	PD1211
5	LST5353R	6.0m†	20m	65	Diffused		3.0 §	20m	120m	35m	585n	5A	Built-In Resistor		PD50r Ø
6	MYB52T	6.0m	20m		Transparent		3.0	20m			585n				PD50n
7	SLP436B	6.0m†	20m		Diffused		2.1	20m	70m	25m	585n	28		A	PD1293a
8	SAY3431	6.0m	20m		Diffused	T-1	2.5	20m	125m	50m	580n	38		A	PD33
9	MV5353	6.0m†	20m	65	Diffused	T-1 3/4	3.0	20m	105m	35m	585n	5A		A	PD16a Ø
10	MY52T	6.0m	20m		Transparent	T-1 3/4	3.0	20m			585n				PD258a
11	TLHY4101	6.3m	10m	22	Water-clear	T-1	3.0	20m	100m	50m	585n	5A%	For DC/Pulse Op		PD1190
12	TLHY4102	6.3m	10m	22	Water-clear	T-1	3.0	20m	100m	50m	585n	5A%	For DC/Pulse Op		PD1190
13	TLHY4203	6.3m	10m	22	Transparent	T-1	3.0	20m	100m	30m	585n	5A%	High-efficiency		PD1190
14	TLHY4205	6.3m	10m	22	Transparent	T-1	3.0	20m	100m	30m	585n	5A%	High-efficiency		PD1190
15	TLHY5201	6.3m	10m	14	Transparent	T-1 3/4	3.0	20m	100m	30m	585n	5A%	High-efficiency	A	PD280k
16	TLHY5202	6.3m	10m	14	Transparent	T-1 3/4	3.0	20m	100m	30m	585n	5A%	High-efficiency	A	PD280k
17	TLHY5602	6.3m	10m	160	Diffused	T-1 3/4	3.0	20m	100m	30m	585n	5A%		A	PD280k
18	TLHY6201	6.3m	10m	28	Transparent	T-1 3/4	3.0	20m	100m	30m	585n	5A%	High-efficiency	A	PD280k
19	TLHY6202	6.3m	10m	28	Transparent	T-1 3/4	3.0	20m	100m	30m	585n	5A%	High-efficiency	A	PD280k
20	TLHY6602	6.3m	10m	160	Diffused	T-1 3/4	3.0	10m	100m	30m	585n	5A%	High-efficiency	A	PD280k
21	L32R-Y2-2116	8.0m	20m	28	Diffused		26	20m	75m	35m	580n	38	Integ. Resistor		PD398g
22	L32R-Y2-2116T	8.0m	20m		Diffused		2.5	20m	75m	35m	580n	38			PD1324
23	L32R-Y2-2316	8.0m	20m	28	Diffused		26	20m	75m	35m	580n	38	Integ. Resistor		PD398h
24	L32R-Y2-2316T	8.0m	20m		Diffused		2.5	20m	75m	35m	580n	38			PD1324a
25	L32R-Y6-2316	8.0m	20m	28	Diffused		7.0	20m	75m	35m	580n	38	Integ. Resistor		PD398h
26	L32R-Y12-2116	8.0m	20m	28	Diffused		14	20m	75m	35m	580n	38			PD398g
27	L32R-Y12-2116T	8.0m	20m		Diffused		14	20m	75m	35m	580n	38			PD1324
28	L32R-Y24-2116	8.0m	20m	28	Diffused		26	20m	75m	35m	580n	38			PD398g
29	L59DY2T	8.0m†	20m	60	Diffused		3.0	20m	120m	30m	585n	5A		B	PD1310
30	L59DY2W	8.0m†	20m	60	Diffused		3.0	20m	120m	30m	585n	5A		A	PD1309a
31	L59DY6T	8.0m†	20m	60	Diffused		7.0	20m	120m	30m	585n	5A		B	PD1310
32	L59DY6W	8.0m†	20m	60	Diffused		7.0	20m	120m	30m	585n	5A		A	PD1309a
33	L59DY12T	8.0m†	20m	60	Diffused		14	20m	120m	30m	585n	5A		B	PD1310
34	L59DY12W	8.0m†	20m	60	Diffused		14	20m	120m	30m	585n	5A		A	PD1309a
35	L59DY24T	8.0m†	20m	60	Diffused		26	20m	120m	30m	585n	5A	Integ. Resistor	B	PD1310
36	L59DY24W	8.0m†	20m	60	Diffused		26	20m	120m	30m	585n	5A		A	PD1309a
37	L121DY	8.0m	20m	60	Diffused		2.5	20m	75m	35m	580n	38		A	PD50n
38	L291DY	8.0m	20m	60	Diffused		2.5	10m	75m	35m	580n	38			PD1297
39	L621DY	8.0m	20m	60	Diffused		2.5	20m	75m	35m	580n	38	Stackable		PD1056a
40	L622DY	8.0m	20m	60	Diffused		2.5	20m	75m	35m	580n	38	Stackable		PD1060
41	L625DY	8.0m	20m	60	Diffused		2.5	20m	75m	35m	580n	38	Stackable		PD1057a
42	L32R-Y6-2116	8.0m	20m	28	Diffused	Panel-mount	7.0	20m	75m	35m	580n	38	Integ. Resistor		PD398g
43	L32R-Y6-2116T	8.0m	20m		Diffused	Panel-mount	7.0	20m	75m	35m	580n	38	Integ. Resistor		PD1324
44	L32R-Y6-2316T	8.0m	20m		Diffused	Panel-mount	7.0	20m	75m	35m	580n	38	Integ. Resistor		PD1324a
45	L32R-Y12-2316	8.0m	20m	28	Diffused	Panel-mount	14	20m	75m	35m	580n	38	Integ. Resistor		PD398h
46	L32R-Y12-2316T	8.0m	20m		Diffused	Panel-mount	14	20m	75m	35m	580n	38	Integ. Resistor		PD1324a
47	L32R-Y24-2116T	8.0m	20m		Diffused	Panel-mount	26	20m	75m	35m	580n	38	Integ. Resistor		PD1324
48	L32R-Y24-2316	8.0m	20m	28	Diffused	Panel-mount	26	20m	75m	35m	580n	38	Integ. Resistor		PD398h
49	L32R-Y24-2316T	8.0m	20m		Diffused	Panel-mount	26	20m	75m	35m	580n	38	Integ. Resistor		PD1324a
50	MT540Y	8.0m	20m	20	Diffused	T-1 3/4	2.8	20m	70m	25m	585n	27		♦	PD1202
51	SAY5531	8.0m	20m		Diffused	T-1 3/4	2.5	20m	125m	50m	580n	38		A	PD28b
52	SAY5633	8.0m	20m		Diffused	T-1 3/4	2.5	20m	125m	50m	580n	38		A	PD47b
53	TLPY154	8.0m†	20m		Diffused	T-1 3/4	2.8	20m	70m	25m	570n	27		A	PD1202 Ø
54	LLL39-1	10m†		18	Water-clear	T-1	2.4	25m		40m	585n				PD54 Ø
55	MSL39-1	10m†		18	Water-clear	T-1	2.4	25m		40m	585n				PD55 Ø
56	5354R5	10m†		24		T-1 3/4	5.0	20m		35m	585n		Built-In Resistor		PD379
57	5354R10	10m†		24		T-1 3/4	10	20m		35m	585n		Built-In Resistor		PD379
58	TLHY4400	10m	1.0m	60	Diffused	T-1	3.0	10m	100m	30m	585n	5A%	High-efficiency		PD1190
59	TLHY4401	10m	1.6m	60	Diffused	T-1	3.0	10m	100m	30m	585n	5A%	High-efficiency		PD1190
60	TLHY4402	10m	1.6m	60	Diffused	T-1	3.0	10m	100m	30m	585n	5A%	High-efficiency		PD1190
61	TLHY4403	10m	2.5m	60	Diffused	T-1	3.0	10m	100m	30m	585n	5A%	High-efficiency		PD1190
62	CQW97A6	10m	10m	60	Transparent	T-1	3.0	10m	90m%	30m	590n	A §		A	PD77 Ø
63	CQX74(A)	10m	10m	20	Transparent	T-1	3.0	10m	90m%	30m	590n	A §		A	PD232j Ø
64	CQX74D6(A)	10m	10m	30	Transparent	T-1	3.0	10m	90m%	30m	590n	A §		A	PD232j Ø
65	TLHY4103	10m	10m	22	Water-clear	T-1	3.0	20m	100m	50m	585n	5A%	For DC/Pulse Op		PD1190
66	TLHY4105	10m	10m	22	Water-clear	T-1	3.0	20m	100m	50m	585n	5A%	For DC/Pulse Op		PD1190
67	HLMP3415	10m	10m	35		T-1 3/4	3.0	10m	85m	20m	583n	5A			PD16a
68	LDY5391	10m	10m	24	Transparent	T-1 3/4	3.0	20m	200m	60m	590n	5A%	Tr/Tf 100ns Typ	B	PD16ak Ø
69	LTL4254	10m	10m	16	Transparent	T-1 3/4	2.8	20m	60m	20m	585n	5A		♦	PD1211
70	TLHY5100	10m	10m	12	Water-clear	T-1 3/4	3.0	20m	100m	30m	585n	XA§	High Efficiency	A	PD1025
71	TLHY5203	10m	10m	14	Transparent	T-1 3/4	3.0	20m	100m	30m	585n	5A%	High-efficiency	A	PD280k
72	TLHY5205	10m	10m	14	Transparent	T-1 3/4	3.0	20m	100m	30m	585m	5A%	High-efficiency	A	PD280k
73	TLHY6203	10m	10m	28	Transparent	T-1 3/4	3.0	20m	100m	30m	585n	5A%	High-efficiency	A	PD280k
74	TLHY6205	10m	10m	28	Transparent	T-1 3/4	3.0	20m	100m	30m	585n	5A%	High-efficiency	A	PD280k
75	TLUY144	10m	15m	36	Diffused		2.8	20m	70m	25m	585n	27		♦	PD1101a Ø
76	MT430Y	10m	15m	20	Transparent	T-1 3/4	2.8	20m	70m	25m	585n	27		♦	PD1199
77	MT440UY	10m	15m	30	Diffused	T-1 3/4	2.8	20m	55m	25m	585n	27		♦	PD1199
78	TLY132	10m	15m	17	Water-clear	T-1 3/4	2.8	20m	70m	25m	585n	27		A	PD422 Ø
79	L111CY	10m	20m	30	Water-clear		3.0	20m	120m	30m	585n	5A		A	PD50t
80	LST5352	10m	20m	28	Water-clear		3.0	20m	120m	35m	585n	5A		A	PD50r Ø
81	LST5352R5	10m	20m	28			5	20m	120m	35m	585n	5A	Built-In Resistor		PD50r Ø
82	LST5352R10	10m	20m	28			10	20m	120m	35m	585n	5A	Built-In Resistor		PD50r Ø
83	LST5354R	10m†	20m	24	Diffused		3.0 §	20m	120m	35m	585n	5A	Built-In Resistor		PD50r Ø
84	ORL5352	10m	20m	28		Side-mount	3.0	20m	120m	35m	585n	5A			PD507 Ø
85	MT630Y	10m	20m	10	Transparent	T-1	2.8	20m	70m	25m	585n	27		♦	PD1203
86	MT640UY	10m	20m	20	Diffused	T-1	2.8	20m	70m	25m	585n	27		♦	PD1203
87	SPY3431	10m	20m		Diffused	T-1	2.5	20m	125m	50m	570n	38		A	PD33
88	TLY164	10m†	20m		Diffused	T-1	2.8	20m	70m	25m	585n	27		A	PD1203 Ø
89	MV5354	10m†	20m	24	Diffused	T-1 3/4	3.0	20m	105m	35m	585n	5A		A	PD16n Ø
90	NSC554Y12	12m	10m	24	Transparent		2.8	10m	115m	35m	585n	5A		A	PD16c Ø
91	561-2601-050	12m	10m	28		Panel-mount	3.0	10m	105m	35m	585n	5A			PD1017
92	561-2601-060	12m	10m	28		Panel-mount	3.0	10m	105m	35m	585n	5A			PD1017a
93	561-2601-070	12m	10m	28		Panel-mount	3.0	10m	105m	35m	585n	5A			PD1017b
94	561-2601-080	12m	10m	28		Panel-mount	3.0	10m	105m	35m	585n	5A			PD1017c
95	561-2601-090	12m	10m	28		Panel-mount	3.0	10m	105m	35m	585n	5A			PD1017d
96	561-2601-100	12m	10m	28		Panel-mount	3.0	10m	105m	35m	585n	5A			PD1017e
97	521-9249	12m	10m	35		T-1 1/2	3.0	10m	120m	20m	585n	5A		A	PD62c Ø
98	HLMP3466	12m	10m	45		T-1 3/4	3.0	10m	85m	20m	583n	5A		B	PD392
99	LY5480	12m†	10m	80	Diffused	T-1 3/4	2.6	10m	150m	45m	590n	5A%		A	PD28p Ø
100	ESAY3431	12m	20m		Diffused	T-1	2.5	20m	125m	50m	580n	38		A	PD33
101	SY913D	13m	10m		Diffused	T-1 3/4	2.5	10m	100m	10m	570n	4A%	Max IF 40mA,Vr 5V	A	PD1239
102	CQX74Y(A)	15m	10m	20	Transparent	T-1 3/4	3.0	10m	90m%	30m	590n	5A%		A	PD56c
103	L291CY	15m	20m	30	Water-clear		2.5	10m	75m	35m	580n	38			PD1297
104	SPY5531	15m	20m		Diffused	T-1 3/4	2.5	20m	125m	50m	570n	38		A	PD28b
105	SPY5633	15m	20m		Diffused	T-1 3/4	2.5	20m	125m	50m	570n	38		A	PD47b
106	E1200(1)	16m					2.6	20m		35m	585n			A	PD16f Ø
107	CQW97A7	16m	10m	60	Transparent	T-1	3.0	10m	90m%	30m	590n	A §		A	PD77 Ø
108	CQX74-7(A)	16m	10m	20	Transparent	T-1	3.0	10m	90m%	30m	590n	A §		A	PD232j Ø
109	CQX74D7(A)	16m	10m	30	Transparent	T-1	3.0	10m	90m%	30m	590n	A §		A	PD232j Ø
110	CQX74L7(A)	16m	10m	20	Transparent	T-1	3.0	10m	90m%	30m	590n	A §		A	PD232k Ø

SYMBOLS AND CODES EXPLAINED IN INTERPRETER

IN ORDER OF COLOR AND: (1) INTENSITY (2) IF TEST (3) BEAM ANGLE & (4) TYPE No.

LINE No.	4 TYPE NUMBER	1 LUMINOUS INTENSITY MIN (cd)	2 IF TEST (A)	3 BEAM ANGLE θ HI (°)	LENS TYPE	LAMP STYLE	VF MAX (V)	IF TEST (A)	PD RATED MAX (W)	IF RATED MAX (A)	PEAK WAVE-LENGTH λP (m)	TEMP. RANGE CODE - +	FEATURES	LEAD CODE	OUTLINE DRAWING
1	LY5421MO(A)	16m	10m	20	Transparent	T-1 3/4	3.0	10m	150m	45m	590n	5A%	Super Bright	A ♦	PD16ah Ø
2	TLHY5101	16m	10m	12	Water-clear	T-1 3/4	3.0	20m	100m	30m	585n	XA§	High Efficiency	A	PD1025
3	TLHY5102	16m	10m	12	Water-clear	T-1 3/4	3.0	20m	100m	30m	585n	XA§	High Efficiency	A	PD1025
4	L59UC-Y24W	16m†	20m	30	Water-clear		26	20m	75m	35m	580n	5A		A	PD1309
5	ESAY3401	16m	20m		Water-clear	T-1	2.5	20m	125m	50m	580n	38		A	PD33
6	CMD5352	16m	20m	28	Transparent	T-1 3/4	3.0	20m	105	35m	585n	5A		A	PD16ao Ø
7	ESAY5531	16m	20m		Diffused	T-1 3/4	2.5	20m	125m	50m	580n	38		A	PD28b
8	L59UD-Y2W	18m†	20m	60	Diffused		3.0	20m	75m	35m	580n	5A		A	PD1309
9	L59UD-Y6W	18m†	20m	60	Diffused		7.0	20m	75m	35m	580n	5A		A	PD1309
10	L59UD-Y12W	18m†	20m	60	Diffused		14	20m	75m	35m	580n	5A		A	PD1309
11	L59UD-Y24W	18m†	20m	60	Diffused		26	20m	75m	35m	580n	5A		A	PD1309
12	CQX74L(A)	20m	10m	20	Transparent	T-1	3.0	10m	90m%	30m	590n	A §		A	PD232k Ø
13	HLMP3416	20m	10m	35		T-1 1/2	3.0	10m	85m	20m	583n	5A			PD940a
14	LDY5392	20m	10m	24	Transparent	T-1 3/4	3.0	20m	200m	60m	590n	5A%	Tr/Tf 100ns Typ	B	PD16ak Ø
15	TLY144	20m†	15m		Transparent	T-1 3/4	2.8	20m	70m	25m	585n	27		A	PD1199 Ø
16	AY3668S	20m	20m		Transparent		2.5	20m	125m	50m	580n	38	Lens:Pale Yellow		PD1396 Ø
17	L58D-Y2W	20m†	20m	60	Diffused		4.0	20m	75m	35m	580n	38		A	PD400a
18	L58D-Y6W	20m†	20m	60	Diffused		4.0	20m	75m	35m	580n	38		A	PD400a
19	L58D-Y12W	20m†	20m	60	Diffused		4.0	20m	75m	35m	580n	38		A	PD400a
20	L58D-Y24W	20m†	20m	60	Diffused		4.0	20m	75m	35m	580n	38		A	PD400a
21	L633DY	20m	20m	50	Diffused		2.5	20m	100m	50m	570n	38	Stackable		PD1057b
22	SLP460C	20m†	20m		Transparent		2.1	20m	70m	25m	585n	28		A	PD1293n
23	HLMP0463	20m	20m	18	Water-clear	Herm. Can	3.0	20m	120m	35m	583n	6A	Herm	B	PD84
24	HLMP0491	20m	20m	18	Water-clear	Herm. Can	3.0	20m	120m	35m	583n	6A	Herm	B	PD84
25	HLMP0492	20m	20m	18	Water-clear	Herm. Can	3.0	20m	120m	35m	583n	6A	Herm	B	PD84
26	HLMP0464	20m	20m	18	Water-clear	Panel-mount	3.0	20m	120m	35m	583n	6A	Herm	B	PD369
27	HLMP0465	20m	20m	18	Water-clear	Panel-mount	3.0	20m	120m	35m	583n	6A	Herm	B	PD369
28	HLMP0466	20m	20m	18	Water-clear	Panel-mount	3.0	20m	120m	35m	583n	6A	Herm	B	PD369
29	L58D-Y2T	20m†	20m	60	Diffused	Panel-mount	4.0	20m	75m	35m	580n	38		A	PD400
30	ESPY3431	20m	20m		Diffused	T-1	2.5	20m	125m	50m	570n	38		A	PD33
31	MT630UY	20m	20m	10	Transparent	T-1	2.8	20m	70m	25m	585n	27		♦	PD1203
32	TLUY164	20m†	20m		Diffused	T-1	2.8	20m	70m	25m	585n	27		A	PD1203 Ø
33	TLY163	20m†	20m		Transparent	T-1	2.8	20m	70m	25m	585n	27		A	PD1203 Ø
34	ESAY5633	20m	20m		Diffused	T-1 3/4	2.5	20m	125m	50m	580n	38		A	PD47b
35	MT530Y	20m	20m	10	Transparent	T-1 3/4	2.8	20m	70m	25m	585n	27		♦	PD1202
36	NSL7330	24m	20m	45	Water-clear		2.5	20m	110m	30m	585n	5A		B	PD545 Ø
37	ESPY3401	24m	20m		Water-clear	T-1	2.5	20m	125m	50m	570n	38		A	PD33
38	HLMP1440	24m	20m	45	Water-clear	T-1	3.0	20m	85m	20m	583n	5A		B	PD77m
39	CMD5352-2	24m	20m	28	Transparent	T-1 3/4	3.0	20m	105	35m	585n	5A		A	PD16ao Ø
40	CMD9350-1	25m		136	Water-clear		5.2	100m	625m	120m	585n	48		A	PD474
41	TLHY5103	25m	10m	12	Water-clear	T-1 3/4	3.0	20m	100m	30m	585n	XA§	High Efficiency	A	PD1025
42	TLHY5105	25m	10m	12	Water-clear	T-1 3/4	3.0	20m	100m	30m	585n	XA§	High Efficiency	A	PD1025
43	CQX74-8(A)	30m	10m	20	Transparent	T-1	3.0	10m	90m%	30m	590n	A §		A	PD232j Ø
44	CQX74L8(A)	30m	10m	20	Transparent	T-1	3.0	10m	90m%	30m	590n	A §		A	PD232k Ø
45	LDY5393	30m	10m	24	Transparent	T-1 3/4	3.0	20m	200m	60m	590n	5A%	Tr/Tf 100ns Typ	B	PD16ak Ø
46	TLUY143	30m	15m	21	Diffused		2.8	20m	70m	25m	585n	27		♦	PD1101a Ø
47	MT430UY	30m	15m	20	Transparent	T-1 3/4	2.8	20m	55m	25m	585n	27		♦	PD1199
48	550-5304	30m	20m	50	Diffused		2.5	20m	125m	50m	570n	38			PD66a
49	550-5305	30m	20m	50	Diffused		2.5	20m	125m	50m	570n	38			PD67a
50	L58C-Y2W	30m†	20m	30	Water-clear		4.0	20m	75m	35m	580n	38		A	PD400a
51	L58C-Y6W	30m†	20m	30	Water-clear		4.0	20m	75m	35m	580n	38		A	PD400a
52	L58C-Y12W	30m†	20m	30	Water-clear		4.0	20m	75m	35m	580n	38		A	PD400a
53	L58C-Y24W	30m†	20m	30	Water-clear		4.0	20m	75m	35m	580n	38		A	PD400a
54	L131DY	30m	20m	50	Diffused		2.5	20m	100m	50m	570n	38		A	PD50n
55	L631DY	30m	20m	50	Diffused		2.5	20m	100m	50m	570n	38	Stackable		PD1056a
56	L632DY	30m	20m	50	Diffused		2.5	20m	100m	50m	570n	38	Stackable		PD1060
57	L635DY	30m	20m	50	Diffused		2.5	20m	100m	50m	570n	38	Stackable		PD1057a
58	PY3668S	30m	20m		Transparent		2.5	20m	125m	50m	570n	38	Lens:Pale Yellow		PD1396 Ø
59	SLP470C	30m†	20m		Transparent		2.1	20m	70m	25m	585n	28		A	PD1293p
60	559-5301-001	30m	20m	50	Diffused	Panel-mount	2.5	20m	125m	50m	570n	38			PD991
61	559-5301-003	30m	20m	50	Diffused	Panel-mount	2.5	20m	125m	50m	570n	38			PD991a
62	559-5301-004	30m	20m	50	Diffused	Panel-mount	2.5	20m	125m	50m	570n	38			PD991b
63	559-5301-005	30m	20m	50	Diffused	Panel-mount	2.5	20m	125m	50m	570n	38			PD991c
64	559-5301-006	30m	20m	50	Diffused	Panel-mount	2.5	20m	125m	50m	570n	38			PD991d
65	559-5301-007	30m	20m	50	Diffused	Panel-mount	2.5	20m	125m	50m	570n	38			PD991e
66	561-5301-050	30m	20m	50	Diffused	Panel-mount	2.5	20m	125m	50m	570n	38			PD1017
67	561-5301-060	30m	20m	50	Diffused	Panel-mount	2.5	20m	125m	50m	570n	38			PD1017a
68	561-5301-070	30m	20m	50	Diffused	Panel-mount	2.5	20m	125m	50m	570n	38			PD1017b
69	561-5301-080	30m	20m	50	Diffused	Panel-mount	2.5	20m	125m	50m	570n	38			PD1017c
70	561-5301-090	30m	20m	50	Diffused	Panel-mount	2.5	20m	125m	50m	570n	38			PD1017d
71	561-5301-100	30m	20m	50	Diffused	Panel-mount	2.5	20m	125m	50m	570n	38			PD1017e
72	L58C-Y2T	30m†	20m	30	Water-clear	Panel-mount	4.0	20m	75m	35m	580n	38		A	PD400
73	550-5306	30m	20m	50	Diffused	Side-mount	2.5	20m	125m	50m	570n	38			PD68a
74	CMD5354	30m	20m	24	Diffused	T-1 3/4	3.0	20m	105	35m	585n	5A		A	PD16ao Ø
75	ESAY5603	30m	20m		Water-clear	T-1 3/4	2.5	20m	125m	50m	580n	38		A	PD47b
76	ESPY5531	30m	20m		Diffused	T-1 3/4	2.5	20m	125m	50m	570n	38		A	PD28b
77	ESPY5633	30m	20m		Diffused	T-1 3/4	2.5	20m	125m	50m	570n	38		A	PD47b
78	TLY154	30m†	20m		Diffused	T-1 3/4	2.8	20m	70m	25m	585n	27		A	PD1202 Ø
79	MK9350-1	30m	100m				5.3	100m	625m	1.0	585n	48		A	PD474 Ø
80	SY913T	35m	10m		Transparent	T-1 3/4	2.5	10m	100m	10m	570n	4A%	Max IF 40mA,Vr 5V	A	PD1239
81	HLMP3490	35m	20m	32	Water-clear		3.0	20m	85m	20m	583n	5A		B	PD941
82	LY5421PO(A)	40m	10m	20	Transparent	T-1 3/4	3.0	10m	150m	45m	590n	5A%	Super Bright	A ♦	PD16ah Ø
83	TLY143	40m†	15m		Transparent	T-1 3/4	2.8	20m	70m	25m	585n	27		A	PD1199 Ø
84	SLP436C50	40m†	20m		Transparent		2.1	20m	70m	25m	585n	28		A	PD1293c
85	TLUY163	40m†	20m		Transparent	T-1	2.8	20m	70m	25m	585n	27		A	PD1203 Ø
86	5352R5	45m†		28		T-1 3/4	5.0	20m		35m	585n		Built-In Resistor		PD379
87	5352R10	45m†		28		T-1 3/4	10	20m		35m	585n		Built-In Resistor		PD379
88	LST5352R	45m†	20m	28	Water-clear		3.0 §	20m	120m	35m	585n	5A	Built-In Resistor		PD50r Ø
89	MV5352	45m†	20m	28	Transparent	T-1 3/4	3.0	20m	105m	35m	585n	5A		A	PD16a Ø
90	CMD9350-2	50m		136	Water-clear		5.2	100m	625m	120m	585n	48		A	PD474
91	CQX74-9(A)	50m	10m	20	Transparent	T-1	3.0	10m	90m%	30m	590n	A §		A	PD232j Ø
92	CQX74L9(A)	50m	10m	20	Transparent	T-1	3.0	10m	90m%	30m	590n	A §		A	PD232k Ø
93	ESPY5603	50m	20m		Water-clear	T-1 3/4	2.5	20m	125m	50m	570n	38		A	PD47b
94	560-0301	53m⊠	30m	65	Diffused	T-1 3/4	§	35m			585n	57			PD479
95	560-0302	53m⊠	30m	65	Diffused	T-1 3/4	4.3	25m	108m		585n	57			PD479
96	560-0304	53m⊠	30m	65	Diffused	T-1 3/4	7.2	25m	180m		585n	57			PD479
97	560-0305	53m⊠	30m	65	Diffused	T-1 3/4	12	20m	240m		585n	57			PD479
98	560-0306	53m⊠	30m	65	Diffused	T-1 3/4	14	21m	302m		585n	57			PD479
99	560-0307	53m⊠	30m	65	Diffused	T-1 3/4	17	20m	336m		585n	57			PD479
100	560-0308	53m⊠	30m	65	Diffused	T-1 3/4	24	16m	461m		585n	57			PD479
101	L121CY	60m	20m	30	Water-clear		2.5	20m	75m	35m	580n	38		A	PD50n
102	ESAY5501	60m	20m		Water-clear	T-1 3/4	2.5	20m	125m	50m	580n	38		A	PD28b
103	NSL7310	60m	20m	24	Water-clear	T-1 3/4	2.5	20m	110m	30m	585n	5A		B	PD284 Ø
104	TLUY154	60m†	20m		Diffused	T-1 3/4	2.8	20m	70m	25m	585n	27		A	PD1202 Ø
105	TLY153	60m†	20m		Transparent	T-1 3/4	2.8	20m	70m	25m	585n	27		A	PD1202 Ø
106	MK9350-2	60m	100m				5.3	100m	625m	1.0	585n	48		A	PD474 Ø
107	LY5421QO(A)	63m	10m	20	Transparent	T-1 3/4	3.0	10m	150m	45m	590n	5A%	Super Bright	A ♦	PD16ah Ø
108	550-5704	80m	20m	25	Water-clear		2.5	20m	125m	50m	570n	38			PD66a
109	550-5705	80m	20m	25	Water-clear		2.5	20m	125m	50m	570n	38			PD67a
110	L131CY	80m	20m	30	Water-clear		2.5	20m	100m	50m	570n	38		A	PD50n

SYMBOLS AND CODES EXPLAINED IN INTERPRETER

2. LED LAMPS - Yellow (Cont'd)

IN ORDER OF COLOR AND: (1) INTENSITY (2) IF TEST (3) BEAM ANGLE & (4) TYPE No.

LINE No.	4 TYPE NUMBER	1 LUMINOUS INTENSITY MIN (cd)	2 IF TEST (A)	3 BEAM ANGLE θ HI (°)	LENS TYPE	LAMP STYLE	VF MAX (V)	IF TEST (A)	PD RATED MAX (W)	IF RATED MAX (A)	PEAK WAVE-LENGTH λP (m)	TEMP. RANGE CODE - +	FEATURES	LEAD CODE	OUTLINE DRAWING
1	559-5701-001	80m	20m	25	Water-clear	Panel-mount	2.5	20m	125m	50m	570n	38			PD991
2	559-5701-003	80m	20m	25	Water-clear	Panel-mount	2.5	20m	125m	50m	570n	38			PD991a
3	559-5701-004	80m	20m	25	Water-clear	Panel-mount	2.5	20m	125m	50m	570n	38			PD991b
4	559-5701-005	80m	20m	25	Water-clear	Panel-mount	2.5	20m	125m	50m	570n	38			PD991c
5	559-5701-006	80m	20m	25	Water-clear	Panel-mount	2.5	20m	125m	50m	570n	38			PD991d
6	559-5701-007	80m	20m	25	Water-clear	Panel-mount	2.5	20m	125m	50m	570n	38			PD991e
7	561-5701-050	80m	20m	25	Water-clear	Panel-mount	2.5	20m	125m	50m	570n	38			PD1017
8	561-5701-060	80m	20m	25	Water-clear	Panel-mount	2.5	20m	125m	50m	570n	38			PD1017a
9	561-5701-070	80m	20m	25	Water-clear	Panel-mount	2.5	20m	125m	50m	570n	38			PD1017b
10	561-5701-080	80m	20m	25	Water-clear	Panel-mount	2.5	20m	125m	50m	570n	38			PD1017c
11	561-5701-090	80m	20m	25	Water-clear	Panel-mount	2.5	20m	125m	50m	570n	38			PD1017d
12	561-5701-100	80m	20m	25	Water-clear	Panel-mount	2.5	20m	125m	50m	570n	38			PD1017e
13	550-5706	80m	20m	25	Water-clear	Side-mount	2.5	20m	125m	50m	570n	38			PD68a
14	HLMP3850	80m	20m	24	Water-clear	T-1 1/2	3.0	20m	85m	20m	583n	5A		B	PD940
15	ESPY5501	80m	20m		Water-clear	T-1 3/4	2.5	20m	125m	50m	570n	38		A	PD28b
16	560-0601	95m	30m	28		T-1 3/4	§	35m			585n	57			PD479
17	560-0602	95m	30m	28		T-1 3/4	4.3	25m	108m		585n	57			PD479
18	560-0603	95m	30m	28		T-1 3/4	6.0	25m	150m		585n	57			PD479
19	560-0604	95m	30m	28		T-1 3/4	7.2	25m	180m		585n	57			PD479
20	560-0605	95m	30m	28		T-1 3/4	12	20m	240m		585n	57			PD479
21	560-0606	95m	30m	28		T-1 3/4	14	21m	302m		585n	57			PD479
22	560-0607	95m	30m	28		T-1 3/4	17	20m	336m		585n	57			PD479
23	560-0608	95m	30m	28		T-1 3/4	24	16m	461m		585n	57			PD479
24	TLUY153	120m†	20m		Transparent	T-1 3/4	2.8	20m	70m	25m	585n	27		A	PD1202 Ø
25	L59UC-Y2W	160m†	20m	30	Water-clear		3.0	20m	75m	35m	580n	5A		A	PD1309
26	L59UC-Y6W	160m†	20m	30	Water-clear		7.0	20m	75m	35m	580n	5A		A	PD1309
27	L59UC-Y12W	160m†	20m	30	Water-clear		14	20m	75m	35m	580n	5A		A	PD1309
28	LA5531D	600m	20m	50	Diffused		2.0	10m			585n			A	PD1249
29	HLMP1402	3.0	10m	60	Diffused	T-1	3.0	10m	85m	20m	583n	5A		B	PD77 Ø
30	KL101A	10 $	10m		Diffused	Low-dome	5.5	10m		10m		17			PD337
31	KL101V	15 $	20m		Diffused	Low-dome	5.5	20m		20m		17			PD337
32	KL101B	20 $	40m		Diffused	Low-dome	5.5	40m		40m		17			PD337

LED LAMP, GREEN

36	555-3301						2.4	20m		40m		57			PD381
37	555-3303						5.0	6.7m				57			PD381
38	SLM13M					Rectangular	2.0	10m	75m	25m	563n				PD1140
39	TRLG3210				Transparent	T-1	2.3	5.0m	100m	30m		5A%	Ref. Voltage Type		PD1190
40	SPG5531SQR		20m		Diffused	Square		20m	125m	50m	565n	38		A	PD1112
41	HLMP0503	1.5n	20m	100		Rectangular	3.0	20m	135m	30m	565n	5A			PD262
42	LED1021	500n					2.5	20m	100m	35m	565n	5A			PD544
43	HLMP6500-010	1.0u	10m	90	Diffused	Rectangular	3.0	10m	135m	30m	565n	2A		A	PD380a
44	AND102G	50u	15m	200	Diffused	T-1	2.6	20m	80m	30m	560n	57		A	PD118a Ø
45	GL2PG1	90u	20m			Cylindrical	2.8	20m	85m	30m	555n	28		A	PD333 Ø
46	SG231D	100u	10m		Diffused	Cylindrical	2.5	10m	100m	40m	565n	4A%		A	PD468
47	TLG123A	100u	10m	40	Water-clear	T-1	2.8	20m	70m	25m	565n	27		A	PD279c Ø
48	AND108GKB	100u	15m	200	Water-clear	Panel-mount	2.6	20m	80m	30m	560n	57		A	PD359 Ø
49	AND108G	100u	15m	200	Water-clear	T-1	2.6	20m	80m	30m	560n	57		A	PD118a Ø
50	AND124G	100u	20m	50	Diffused	T-1	2.8	20m	70m	25m	565n	57		A	PD279c Ø
51	AND226G	.15m	10m		Diffused		2.8	20m	70m	25m	565n	5A		A	PD427
52	TLG226	150u	10m		Diffused		2.8	20m	70m	25m	565n	27		A	PD427 Ø
53	GL9PG3	150u	20m				2.8	20m	85m	30m	555n	28		A	PD335
54	GL9PG6	150u	20m		Diffused		2.8	20m	85m	30m	555n	28			None
55	GL9PG2	150u	20m			Rectangular	2.8	20m	85m	30m	555n	28		A	PD334 ☑
56	GL9PG4	150u	20m			Rectangular	2.8	20m	85m	30m	555n	28		A	PD334a
57	GL9PG9	150u	20m		Diffused	Rectangular	2.8	20m	85m	30m	555n	28			PD490
58	SLP203C	200u†	5.0m		Transparent		1.9	5.0m	25m	10m	565n	26		A	PD1312
59	SLP204C	200u†	5.0m		Transparent		1.9	5.0m	25m	10m	565n	26		A	PD1312a
60	SEL1312G	200u	10m		Diffused		2.5	10m		30m	560n	28		A	PD500
61	SEL1320G	200u	10m		Diffused		2.5	10m		30m	560n	3A		A	PD497
62	SEL1321G	200u	10m		Diffused		2.5	10m		30m	560n	3A		A	PD498
63	SEL1331G	200u	10m		Diffused		2.5	10m		30m	570n	28		A	PD501
64	SEL1334G	0.2m	10m		Diffused		2.5	10m	90m	30m	560n	3A		A	PD943
65	SEL1341G	200u	10m		Diffused		2.5	10m		30m	560n	28		A	PD502
66	SG235D	.20m	10m				2.5	10m	100m	40m	565n	4A%		A	PD426
67	SG238D	200u	10m				2.5	10m	100m	40m	565n	4A%			PD1241
68	SG239D	200u	10m				2.5	10m	100m	40m	565n	4A%		A	PD1243
69	SG825D	200u	10m		Diffused		2.5	10m	100m	40m	555n	4A%	Max Vr 5V	A	PD1373a
70	LTL13239B	200u	10m	170		Rectangular	2.8	20m	100m	30m	565n	5A		♦	PD1231
71	LTL23234A	200u	10m	125		Rectangular	2.8	20m	100m	30m	565n	5A		A	PD1365
72	SEL1323G	200u	10m		Diffused	Rectangular	2.5	10m	90m	30m	560n	3A		A	PD383
73	SEL1324G	0.2m	10m		Diffused	Rectangular	2.5	10m	90m	30m	560n	3A		A	PD383a
74	SG232D	200u	10m		Diffused	Rectangular	2.5	10m	100m	40m	565n	4A%		A	PD467
75	SG236D	0.2m	10m			Rectangular	2.5	100m		40m	565n	4A%		A	PD951
76	SG237D	0.2m	10m			Rectangular	2.5	100m		40m	565n	4A%		A	PD949
77	SEL1342G	0.2m	10m		Diffused	Square	2.5	10m	90m	30m	560n	3A		A	PD944
78	LST4253F	200u	10m	80	Diffused	T-1 3/4	2.8	20m	120m	40m	565n	5A		A	PD16aq
79	SG233D	0.2m	10m			Triangular	2.5	10m		40m	565n	4A%		A	PD948
80	CMD5277C	200u	20m	180	Diffused		3.0	20m	105m	35m	565m	5A		A	PD16aq
81	G32	.2m	20m				2.6	20m			560n				PD1019
82	TLSG3700	250u	10m	100	Diffused	Cylindrical	3.0	10m	100m	30m	565n	5A%			PD1195
83	TLSG3600	250u	10m	100	Diffused	Rectangular	3.0	10m	100m	30m	565n	5A%			PD1194
84	TLSG5600	250u	10m	100	Diffused	Rectangular	3.0	10m	100m	30m	565n	5A%		A	PD1005a
85	TLSG5700	250u	10m	100	Diffused	Rectangular	3.0	10m	100m	30m	565n	5A%		A	PD1006
86	TLSG5500	250u	10m	100	Diffused	Triangular	3.0	10m	100m	30m	565n	5A%			PD631
87	TLG102KW	250u	15m	200	Diffused	Panel-mount	2.6	20m	80m	30m	565n	27		A	PD359 Ø
88	LA7521(2)	300u			Diffused		2.0	10m			567n			A	PD1271
89	RGL5621	300u	2.8m	40	Diffused	Arch	6.0 §				565n	5A%	Internal Resistor	A	PD81 Ø
90	LTL2233A	300u	10m	200		Cylindrical	2.8	20m	100m	30m	565n	5A		A	PD1219
91	LTL2251A	300u	10m	180		Cylindrical	2.8	20m	60m	20m	585n	5A		♦	PD1285
92	LTL3235S	300u	10m	150	Diffused	Rectangular	2.8	20m	100m	30m	565n	5A		A	PD1222
93	LTL13235A	300u	10m	150		Rectangular	2.8	20m	100m	30m	565n	5A		♦	PD1363
94	GL9NG6	300u	20m		Diffused		2.8	20m	85m	30m	565n	28			None
95	GL9PG12	0.3m	20m		Milk-white		2.8	20m	85m	30m	555n	28			None ☑
96	GL9PG24	0.3m	20m				2.8	20m	85m	30m	555n	28			None ☑
97	GL9PG34	0.3m	20m		Milk-white		2.8	20m	85m	30m	555n	28			None ☑
98	LA6821	300u	20m		Diffused		2.0	10m			567n			A	PD1266
99	LA7021	300u	20m		Diffused		2.0	10m			567n			A	PD1267
100	LA7121	300u	20m		Diffused		2.0	10m			567n			A	PD1268
101	LA7221	300u	20m		Diffused		2.0	10m			567n			A	PD1269
102	LA7421	300u	20m		Diffused		2.0	10m			567n			A	PD1270
103	LA7621D	300u	20m		Diffused		2.0	10m			567n			A	PD1272
104	LA8521	300u	20m		Diffused		2.0	10m			567n			A	PD1273
105	TLSG6600	300u	20m	100			3.0	20m	100m	30m	565n	5A%			PD1196
106	HLMP0581	.3m	20m	70		Panel-mount	3.0	25m	120m	35m	565n	5A			PD369
107	GL9NG9	300u	20m		Diffused	Rectangular	2.8	20m	85m	30m	565n	28			PD490
108	MG62D	300u	20m		Diffused	Rectangular	3.0	20m			565n				PD484b
109	AND123G	300u	20m	40	Water-clear	T-1	2.8	20m	70m	25m	565n	57		A	PD279c Ø
110	GL3PG3	300u	20m			T-1	2.8	20m	75m	30m	555n	27		A	PD279 Ø

SYMBOLS AND CODES EXPLAINED IN INTERPRETER

2. LED LAMPS - Green (Cont'd)

IN ORDER OF COLOR AND: (1) INTENSITY (2) IF TEST (3) BEAM ANGLE & (4) TYPE No.

LINE No.	4 TYPE NUMBER	1 LUMINOUS INTENSITY MIN (cd)	2 IF TEST (A)	3 BEAM ANGLE θ HI (°)	LENS TYPE	LAMP STYLE	VF MAX (V)	IF TEST (A)	PD RATED MAX (W)	IF RATED MAX (A)	PEAK WAVE-LENGTH λP (m)	TEMP. RANGE CODE - +	FEATURES	LEAD CODE	OUTLINE DRAWING
1	XC4850-5VG	400u		80	Diffused	T-1 3/4	2.8	10m	115m	20m	565n	5A		A	PD18a
2	HLMP7040-011	400u	2.0m	70	Diffused		2.2	2.0m	24m	7.0m	565n	5A		A	PD1340a
3	HLMP7040-021	400u	2.0m	70	Diffused		2.2	2.0m	24m	7.0m	565n	5A		A	PD1341a
4	HLMP7040	400u	2.0m	70	Diffused	T-3/4	2.2	2.0m	24m	7.0m	565n	5A		A	PD180a
5	LTL1234A	400u	10m	120	Diffused	Cylindrical	2.8	20m	100m	30m	565n	5A	Cyl	A	PD1218
6	LTL2231A	400u	10m	180		Cylindrical	2.8	20m	100m	30m	565n	5A		♦	PD1285
7	TLSG3200	400u	10m	100	Diffused	Cylindrical	3.0	10m	100m	30m	565n	5A%			PD1191
8	TLSG3701	400u	10m	100	Diffused	Cylindrical	3.0	10m	100m	30m	565n	5A%			PD1195
9	TLMG2200	400u	10m		Transparent	Herm. Can	3.0	10m			565n	5A%	Typ P 70mW,I 23mA	V	PD1384
10	CQX29	400u	10m	50	Diffused	Low-dome	3.0	20m	100m	30m	565n	5A%		A	PD395 Ø
11	LTL3231A	400u	10m	124	Diffused	Rectangular	2.8	20m	100m	30m	565n	5A		A	PD1220
12	LTL3233A	400u	10m	130	Diffused	Rectangular	2.8	20m	100m	30m	565n	5A		A	PD1221
13	LTL3238A	400u	10m	106	Diffused	Rectangular	2.8	20m	100m	30m	565n	5A		A	PD1224
14	LTL13231AL	400u	10m	130	Diffused	Rectangular	2.8	20m	100m	30m	565n	5A		A	PD1229
15	LTL23231AL	400u	10m	130	Diffused	Rectangular	2.8	20m	100m	30m	565n	5A		A	PD1232
16	LTL23233A	400u	10m	140		Rectangular	2.8	20m	100m	30m	565n	5A		A	PD1364
17	TLSG3300	400u	10m	100	Diffused	Rectangular	3.0	10m	100m	30m	565n	5A%			PD1192
18	TLSG3601	400u	10m	100	Diffused	Rectangular	3.0	10m	100m	30m	565n	5A%			PD1194
19	TLSG5100	400u	10m	100	Diffused	Rectangular	3.0	20m	100m	30m	565n	5A%			PD627
20	TLSG5300	400u	10m	100	Diffused	Rectangular	3.0	10m	100m	30m	565n	5A%			PD629
21	TLSG5601	400u	10m	100	Diffused	Rectangular	3.0	10m	100m	30m	565n	5A%		A	PD1005a
22	TLSG5701	400u	10m	100	Diffused	Rectangular	3.0	10m	100m	30m	565n	5A%		A	PD1006
23	LTL9232A	400u	10m	100		Square	2.8	20m	100m	30m	565n	5A		♦	PD1366
24	LTL9234A	400u	10m	120	Diffused	Square	2.8	20m	100m	30m	565n	5A		A	PD1228
25	TLSG5200	400u	10m	100	Diffused	T-1 3/4	3.0	20m	100m	30m	565n	5A%			PD628
26	LTL8232A	400u	10m	100	Diffused	Triangular	2.8	20m	100m	30m	565n	5A		A	PD1226
27	TLSG3400(A)	400u	10m	100	Diffused	Triangular	3.0	10m	100m	30m	565n	5A%			PD1193
28	TLSG5400	400u	10m	100	Diffused	Triangular	3.0	10m	100m	30m	565n	5A%			PD630
29	TLSG5501	400u	10m	100	Diffused	Triangular	3.0	10m	100m	30m	565n	5A%			PD631
30	GL9NG22	400u	20m		Diffused		2.8	20m	85m	30m	565n	28			PD489
31	LA2021	400u	20m	40	Diffused		2.0	10m			567n			A	PD1252
32	LA2421	400u	20m	40	Diffused		2.0	10m			567n			A	PD1253
33	LA3721D	400u	20m		Diffused		2.0	10m			567n			A	PD1256
34	LA6021	400u	20m		Diffused		2.0	10m			567n			A	PD1258
35	LA6121	400u	20m		Diffused		2.0	10m			567n			A	PD1259
36	LA6221	400u	20m		Diffused		2.0	10m			567n			A	PD1260
37	LA6321	400u	20m		Diffused		2.0	10m			567n			A	PD1261
38	LA6421	400u	20m		Diffused		2.0	10m			567n			A	PD1262
39	LA6521D	400u	20m		Diffused		2.0	10m			567n			A	PD1263
40	LA6621	400u	20m		Diffused		2.0	10m			567n			A	PD1264
41	LA6721	400u	20m		Diffused		2.0	10m			567n			A	PD1265
42	LA9021	400u	20m		Diffused		2.0	10m			567n			A	PD1274
43	HLMP0554	.4m	20m	70		Panel-mount	3.0	25m	120m	35m	565n	5A			PD369
44	HLMP0580	.4m	20m	70		Panel-mount	3.0	25m	120m	35m	565n	5A			PD369
45	MI9500/521-01	.4m	20m	70	Diffused	Panel-mount	3.0	20m	120m	35m	565n	6A			PD369
46	MI9500/521-02	.4m	20m	70	Diffused	Panel-mount	3.0	20m	120m	35m	565n	6A			PD369
47	GL9NG10	400u	20m		Diffused	Rectangular	2.8	20m	85m	30m	565n	28			PD484
48	NSL5286	400u	20m	60	Diffused	T-1	3.0	20m	120m	35m	565n	5A		B	PD77 Ø
49	GL3PG1	450u	20m		Diffused	T-1	2.8	20m	75m	30m	555n	27		A	PD279 Ø
50	GL3PG2	450u	20m		Diffused	T-1	2.8	20m	75m	30m	555n	27		A	PD279a Ø
51	547-2303	.50m					5.0	6.7m			565n	5A			PD378
52	555-2303	500u†					5.0 §	6.7m			565n	5A			PD380
53	HLMP1687	500u		140	Diffused		7.5			15m	565n	28	Integ. Resistor		PD1338
54	HLMP1688	500u		140	Diffused		15			20m	565n	28	Integ. Resistor		PD1338
55	558-0202-001	500u				Panel-mount	7.5			20m	565n		Built-In Resistor	♦	PD990
56	558-0202-003	500u				Panel-mount	7.5			20m	565n		Built-In Resistor	♦	PD990a
57	558-0202-004	500u				Panel-mount	7.5			20m	565n		Built-In Resistor	♦	PD990b
58	558-0202-005	500u				Panel-mount	7.5			20m	565n		Built-In Resistor	♦	PD990c
59	558-0202-006	500u				Panel-mount	7.5			20m	565n		Built-In Resistor	♦	PD990d
60	558-0202-007	500u				Panel-mount	7.5			20m	565n		Built-In Resistor	♦	PD990e
61	CQV61	500u	10m	110	Diffused		3.0	10m	90m	30m	560n	5A		A	None ☑
62	LTL259	500u	10m	72	Diffused		2.8	20m	60m	20m	585n	5A		♦	PD1210c
63	LTL709L	500u	10m	38	Diffused		2.8	20m	60m	20m	565n	5A	mini	A	PD1286
64	MT230G	500u	10m	75	Transparent		2.8	20m	70m	25m	565n	27		♦	PD478
65	MT240G	500u	10m	75	Diffused		2.8	20m	70m	25m	565n	27		♦	PD478
66	SG206D	500u	10m				2.6	10m	100m	40m	565n	4A%		A	PD1242
67	CQX11	500u	10m	50	Diffused	Arch	3.0	10m	120m	30m	560n	XA§		A	PD431
68	CQV61A(A)	.5m	10m	110		Rectangular	3.0	10m	180m	60m	565n	5A%			PD1082
69	CQV61AL(A)	.5m	10m	110		Rectangular	3.0	10m	180m	60m	565n	5A%			PD1084
70	LTL3237A	500u	10m	120	Diffused	Rectangular	2.8	20m	100m	30m	565n	5A		A	PD1223
71	LTL13238A	500u	10m	180	Diffused	Rectangular	2.8	20m	100m	30m	565n	5A		A	PD1230
72	LTL9233A	500u	10m	150	Diffused	Square	2.8	20m	100m	30m	565n	5A		A	PD1227
73	CQX65	.50m	10m			T-1 3/4	3.0	10m	120m	30m	560n	5A%		A	PD56c
74	CQX66	.50m	10m			T-1 3/4	3.0	10m	120m	30m	560n	5A%		A	PD56c
75	CQX67	.50m	10m			T-1 3/4	3.0	10m	120m	30m	560n	5A%		A	PD56c
76	CQX68	.50m	10m			T-1 3/4	3.0	10m	120m	30m	560n	5A%		A	PD56c
77	MV52154	500u	10m	80	Diffused	T-1 3/4	3.0	10m	105m	35m	565n	5A		B	PD47a Ø
78	AND206G	.50m	15m		Diffused	Cylindrical	2.8	20m	70m	25m	565n	5A		A	PD424
79	TLG206	500u	15m		Diffused	Cylindrical	2.8	20m	70m	25m	565n	27		A	PD424 Ø
80	AND205G	500u	15m			Rectangular	2.8	20m	70m	25m	565n	27		A	PD383 ☑
81	AND208G	0.5m	15m		Diffused	Rectangular	2.8	20m	70m	25m	565n	5A		♦	PD540
82	TLG205	500u	15m		Diffused	Rectangular	2.8	20m	70m	25m	565n	27		A	PD383 ☑
83	TLG208	500u	15m		Diffused	Rectangular	2.8	20m	70m	25m	565n	27		A	PD540
84	AND207G	0.5m	15m		Diffused	Triangular	2.8	20m	70m	25m	565n	5A		♦	PD425
85	TLG207	500u	15m		Diffused	Triangular	2.8	20m	70m	25m	565n	27		A	PD425
86	AND121G	500u	20m	50	Transparent		2.6	20m	60m	20m	565n	57		A	PD331 ☑
87	AND122G	500u	20m	50	Water-clear		2.6	20m	60m	20m	565n	57		A	PD331 ☑
88	CK3G	500u	20m	100			2.0	20m	180m	70m		5A		A	PD283
89	CK5G	500u	20m	100			2.0	20m	180m	70m		5A		A	PD19
90	GL4PG2	500u	20m				2.8	20m	85m	30m	555n	28		A	PD279b Ø
91	GL9NG23	500u	20m		Diffused		2.8	20m	85m	30m	565n	28			None
92	LA2821	500u	20m		Diffused		2.0	10m			567n			A	PD1254
93	LA3021	500u	20m	60	Diffused		2.0	10m			567n			A	PD1247
94	LA3621	500u	20m	90	Diffused		2.0	10m			567n			A	PD1247b
95	LA4221	500u	20m	60	Diffused		2.0	10m			567n			A	PD1247d
96	LA5021	500u	20m	45	Diffused		2.0	10m			567n			A	PD1248
97	LA5721	500u	20m	60	Diffused		2.0	10m			567n			A	PD1250
98	LA5821	500u	20m		Diffused		2.0	10m			567n			A	PD1257
99	LA30021	500u	20m	90	Diffused		2.0	10m			567n			A	PD1247
100	LA40021	500u	20m	90	Diffused		2.0	10m			567n			A	PD1247c
101	LA42021	500u	20m	90	Diffused		2.0	10m			567n			A	PD1247d
102	LA50121	500u	20m	120	Diffused		2.0	10m			567n			A	PD1248
103	LA57021	500u	20m	90	Diffused		2.0	10m			567n			A	PD1250
104	LA57031	500u	20m	90	Diffused		2.0	10m			585n			A	PD1250
105	LA57121	500u	20m	180	Diffused		2.0	10m			567n				PD1250
106	LAH3101	500u	20m	80	Diffused		2.0	10m			567n			A	PD1279
107	MG61D	500u	20m				3.0	20m	105m	35m	565n	5A		B	PD525
108	MT210G	500u	20m	60	Water-clear		2.6	20m	60m	15m	565n	27	Mini; Axial	A	PD331
109	MT220G	500u	20m	60	Transparent		2.6	20m	20m	15m	565n	27	Mini; Axial	A	PD331
110	NSL5252	500u	20m	15	Water-clear		2.8	20m	175m	50m	565n	4A		A	PD50g Ø

SYMBOLS AND CODES EXPLAINED IN INTERPRETER

2. LED LAMPS - Green (Cont'd)

IN ORDER OF COLOR AND: (1) INTENSITY (2) IF TEST (3) BEAM ANGLE & (4) TYPE No.

LINE No.	4 TYPE NUMBER	1 LUMINOUS INTENSITY MIN (cd)	2 IF TEST (A)	3 BEAM ANGLE θ HI (°)	LENS TYPE	LAMP STYLE	VF MAX (V)	IF TEST (A)	PD RATED MAX (W)	IF RATED MAX (A)	PEAK WAVE-LENGTH λP (m)	TEMP. RANGE CODE - +	FEATURES	LEAD CODE	OUTLINE DRAWING
1	NSL5253	500u	20m	20	Diffused		2.8	20m	175m	50m	565n	4A		A	PD50g Ø
2	OPL710	0.5m	20m	80			3.0	20m	120m	40m	690n	5A		A	PD257
3	TLG121	500u	20m	50	Water-clear		2.8	20m	60m	20m	565n	27		A	PD331 Ø
4	TLG122	500u	20m	50	Water-clear		2.8	20m	60m	20m	565n	27		A	PD331 Ø
5	TLG211	0.5m	20m				2.8	20m	70m	25m	565n	27		♦	PD1103 ⊠
6	BG3665S	0.5m	20m		Transparent	Cylindrical	2.5	20m	125m	50m	555n	38	Lens:Pale Green		PD1395
7	MG21D	500u	20m			Cylindrical	3.0	20m	105m	35m	565n	5A			PD333a
8	GL9NG2	500u	20m		Diffused	Rectangular	2.8	20m	85m	30m	565n	28		A	PD334 ⊠
9	MG71D	500u	20m			Rectangular	3.0	20m	105m	35m	565n	5A		A	PD490
10	HLMP1500	0.5m	20m		Diffused	T-1	3.0	20m	120m	30m	565n	5A		B	PD77h
11	TIL232-1	500u	20m	60	Diffused	T-1	3.2	20m		50m	560n	5A		♦	PD16ae
12	GL5PG1	500u	20m		Diffused	T-1 3/4	2.8	20m	75m	30m	555n	28		A	PD280 Ø
13	GL5PG2	500u	20m		Diffused	T-1 3/4	2.8	20m	75m	30m	555n	28		A	PD280a Ø
14	MG81D	500u	20m			T-1 3/4	3.0	20m	105m	35m	565n	5A			PD562
15	NSC209-5VG	600u		75	Diffused		5.0 §	20m	115m	20m	565n	5A	Integ. Resistor	A	PD16ac Ø
16	NSC210G	600u	10m	50	Transparent		2.8	10m	120m	35m	565n	5A		A	PD16aj Ø
17	NSC556G	600u	10m	30	Diffused		2.8	10m	115m	40m	565n	5A		A	PD18c Ø
18	NSC4850G	600u	10m	80	Diffused	T-1 3/4	2.8	10m	115m	40m	565n	5A		A	PD18c Ø
19	NSC5053G	600u	10m	80	Diffused	T-1 3/4	2.8	10m	115m	40m	565n	5A		B	PD284 Ø
20	NSC5059G	600u	10m	80	Diffused	T-1 3/4	2.8	10m	120m	35m	565n	5A		B	PD16ad Ø
21	MT2240G	600u	15m	120	Diffused		2.8	20m	70m	25m	565n	27	Side View	A	PD915
22	559-4201-001	600u	20m	55	Diffused		2.8	20m	70m	30m	565n	28		♦	PD997
23	559-4201-007	600u	20m	55	Diffused		2.8	20m	70m	30m	565n	28		♦	PD997e
24	LA3021D	600u	20m	45	Diffused		2.0	10m			567n			A	PD1247a
25	LA5021D	600u	20m	24	Diffused		2.0	10m			567n			A	PD1247E
26	LA5721D	600u	20m	40	Diffused		2.0	10m			567n				PD1251
27	LA8921D	600u	20m		Diffused		2.0	10m			567n			A	PD1255
28	LAH495	600u	20m		Diffused		2.2	10m			565n			A	PD1280
29	LAH498	600u	20m		Diffused		2.2	10m			565n			A	PD1281
30	LAH502	600u	20m		Diffused		2.2	10m			565n			A	PD1280a
31	LAH508	600u	20m		Diffused		2.2	10m			565n			A	PD1281a
32	MV5277C	600u†	20m	180			3.0	20m	105m	35m	565n	5A		A	PD16e Ø
33	SLP258B	600u†	20m		Diffused		2.1	20m	70m	25m	565n	28		♦	PD1315
34	LDG471	600u	20m	100	Water-clear	DIP	3.0	20m	85m	25m	560n	38%	Clear Lens	♦	PD1047 Ø
35	559-4201-003	600u	20m	55	Diffused	Panel-mount	2.8	20m	70m	30m	565n	28		♦	PD997a
36	559-4201-004	600u	20m	55	Diffused	Panel-mount	2.8	20m	70m	30m	565n	28		♦	PD997b
37	559-4201-005	600u	20m	55	Diffused	Panel-mount	2.8	20m	70m	30m	565n	28		♦	PD997c
38	559-4201-006	600u	20m	55	Diffused	Panel-mount	2.8	20m	70m	30m	565n	28		♦	PD997d
39	GL9NG4	0.6m	20m			Rectangular	2.8	20m	85m	30m	565n	28		A	PD334a
40	CMD5274C	600u	20m	90	Diffused	T-1 1/4	3.0	20m	105m	35m	565n	5A		A	PD16k
41	LG3369EO	630u	2.0m	60	Diffused	T-1	2.7	2.0m	20m	7.5m	565n	5A%	IC Compatible	A	PD279c Ø
42	LG5469EO	630u	2.0m	50	Diffused	T-1 3/4	2.7	2.0m	20m	7.5m	565n	5A%	IC Compatible	A ♦	PD16ah Ø
43	TLLG5400	630u	2.0m	25	Diffused	T-1 3/4	2.4	2.0m	20m	7.0m	565n	XA§		A	PD1205
44	TLPG5600(A)	630u	10m	80	Diffused	Side-mount	3.0	10m	100m	30m	565n	XA§	Side View		PD1183
45	TLHG5600	630u	10m	160	Diffused	T-1 3/4	3.0	20m	100m	30m	565n	5A%	High-efficiency	A	PD280k
46	CQV81L(A)	700u	10m	100	Diffused		3.0	10m	180m%	60m	565n	A §	Octagonal	A	PD262m
47	SG240D(A)	700u	10m				2.5	10m	100m	40m	565n	4A%		A	PD1244
48	SG815D	700u	10m		Transparent		2.5	10m	100m	40m	555n	4A%	Max Vr 5V	A	PD1373b
49	CQX11-1	700u	10m	50		Arch	2.1	10m		60m	565n			A	PD431
50	CQW21(A)	700u	10m	100	Diffused	Cylindrical	3.0	10.m	150m	60m	565n	A §		A	PD1055 Ø
51	LTL2234WC	700u	10m	150	Water-clear	Cylindrical	2.8	20m	100m	30m	565n	5A		B	PD1362
52	CQW61(A)	700u	10m	110	Diffused	Panel-mount	3.0	10m	180m%	60m	565n	A §		A	PD1082 ⊠
53	CQW61L(A)	700u	10m	110	Diffused	Panel-mount	3.0	10m	180m%	60m	565n	A §		A	PD1084 ⊠
54	CQV71A	700u	10m	100	Diffused	Rectangular	3.0	10m	180m%	60m	565n	A §		A	PD1085 ⊠
55	CQV71AL	700u	10m	100	Diffused	Rectangular	3.0	10m	180m%	60m	565n	A §		A	PD1086 ⊠
56	CQW11B(A)	700u	10m	100	Diffused	Rectangular	3.0	10m	180m%	60m	565n	A §		A	PD922 ⊠
57	CQW11BL(A)	700u	10m	100	Diffused	Rectangular	3.0	10m	180m%	60m	565n	A §		A	PD922 ⊠
58	CQS95	700u	10m	60	Diffused	T-1	2.8	20m	90m%	30m	565n	A §		A	PD322c Ø
59	CQY94B(A)	700u	10m	70	Diffused	T-1	3.0	10m	180m%	60m	565n	A §		A ♦	PD232j Ø
60	CQY94BL	700u	10m	70	Diffused	T-1	3.0	10m	180m%	60m	565n	A §		A	PD232k Ø
61	CQY95B(A)	700u	10m	70	Diffused	T-1	3.0	10m	150m	60m	565n	A §		A ♦	PD77 Ø
62	CQS84L	700u	10m	70	Diffused	T-1 1/2	2.6	10m	180m%	60m	565n	A §		A	PD15e Ø
63	MGB71D	700u	20m		Diffused		3.0	20m			565n				PD490b
64	SLP251B	0.7m†	20m		Diffused		2.1	20m	70m	25m	565n	28		A	PD1300
65	SLP254B	700u†	20m		Diffused		2.1	20m	70m	25m	565n	28		A	PD1302
66	SLP255B	700u†	20m		Diffused		2.1	20m	70m	25m	565n	28		A	PD1300a
67	SLP256B	700u†	20m		Diffused		2.1	20m	70m	25m	565n	28		♦	PD1305
68	SVD203(2)	0.7m	20m		Water-clear		2.8	20m	50m	30m	560n	28		B	PD608 ⊠
69	MGB61D	700u	20m		Diffused	Rectangular	3.0	20m			565n				PD262k
70	MGB81D	700u	20m		Diffused	T-1 1/2	3.0	20m			565n				PD982
71	MV52152	750u	10m	70	Water-clear	T-1 3/4	3.0	10m	105m	35m	565n	5A		B	PD47a Ø
72	550-0704	0.8m					5.0	20m		20m	565n	5A			PD66
73	550-0705	0.8m					5.0	20m		20m	565n	5A			PD67
74	550-0706	0.8m					5.0	20m		20m	565n	5A			PD68
75	559-0202-001	800u				Panel-mount	7.5			20m	565n		Built-In Resistor	♦	PD991
76	559-0202-003	800u				Panel-mount	7.5			20m	565n		Built-In Resistor	♦	PD991a
77	559-0202-004	800u				Panel-mount	7.5			20m	565n		Built-In Resistor	♦	PD991b
78	559-0202-005	800u				Panel-mount	7.5			20m	565n		Built-In Resistor	♦	PD991c
79	559-0202-006	800u				Panel-mount	7.5			20m	565n		Built-In Resistor	♦	PD991d
80	559-0202-007	800u				Panel-mount	7.5			20m	565n		Built-In Resistor	♦	PD991e
81	MT850-5VG	800u	5.0m	80	Diffused		20	5.0m	70m	7.5m	565n	27	Integ. Resistor	A	PD1162
82	TLG209	800u	10m				2.8	20m	70m	25m	565n	37		A	None
83	TLG210	0.8m	10m		Diffused		2.8	20m	70m	25m	565n	27		A	None
84	MT109G	800u	10m		Diffused	Square	2.8	10m	70m	25m	565n	27		A	PD1351
85	TLG124A	800u	10m	40	Diffused	T-1	2.8	20m	70m	25m	565n	27		A	PD279c Ø
86	MT140G	800u	15m	80	Diffused		2.8	20m	100m	25m	565n	27		A	PD1162
87	MT140HLG	800u	15m	80	Diffused		2.8	20m	70m	25m	565n	27	Wire-Wrap Leads		PD258b
88	MT140SLG	800u	15m	80	Diffused		2.8	20m	100m	25m	565n	27			PD258c
89	TLG102A	0.8m	15m	110	Diffused	Cylindrical	2.8	20m	85m	30m	565n	27		♦	PD1102
90	AND114G	800u	15m	80	Jewel	T-1 3/4	2.8	20m	100m	25m	565n	57		A	PD215 Ø
91	TLG114A	800u	15m	80	Diffused	T-1 3/4	2.8	20m	100m	25m	565n	27		A	PD422a Ø
92	521-9210	800u	20m	60	Diffused		3.0	20m	100m	30m	565n	5A		B	PD77e Ø
93	551-0205	800u†	20m	60	Diffused		3.0	20m	100m	30m	565n	5A		A	PD382 ⊠
94	558-0201-001	800u	20m				3.0	20m	120m	30m	560n	5A		♦	None △
95	LA50221	800u	20m	15	Diffused		2.0	10m			567n			A	PD1248
96	LA50321	800u	20m	30	Diffused		2.0	10m			567n			A	PD1248
97	LST5253	800u	20m	65	Diffused		3.0	20m	120m	35m	565n	5A		A	PD50r Ø
98	LST5253R5	0.8m	20m	65			5.0	20m	120m	35m	565n	5A	Integ. Resistor		PD50r Ø
99	LST5253R10	0.8m	20m	65			10	20m	120m	35m	565n	5A	Integ. Resistor		PD50r Ø
100	MG31C	800u	20m	40	Water-clear		3.0	20m	60m	35m	565n	5A		A	PD257
101	MG31D	800u	20m	45	Diffused		3.0	20m	60m	35m	565n	5A		A	PD257
102	MG31T	800u	20m	40	Transparent		3.0	20m	60m	35m	565n	5A		A	PD257
103	MG31W	800u	20m	45	Milk-white		3.0	20m	60m	35m	565n	5A		A	PD257
104	SLP202C	800u†	20m		Transparent		2.0	15m	55m	30m	565n	28		A	PD1330
105	SLP244B	800u†	20m		Diffused		2.1	20m	70m	25m	565n	28		A	PD1313
106	SLP246B	800u†	20m		Diffused		2.1	20m	70m	25m	565n	28		A	PD1314
107	SLP259B	800u†	20m		Diffused		2.1	20m	70m	25m	565n	28		A	PD1306
108	SLP273B01	800u†	20m		Diffused		2.1	20m	70m	25m	565n	28		A	PD1308
109	SLP274B	800u†	20m		Diffused		2.1	20m	70m	25m	565n	28		A	PD489b
110	BG5562X	0.8m	20m			Cylindrical	2.5	20m	125m	50m	555n	38			PD1394

SYMBOLS AND CODES EXPLAINED IN INTERPRETER

2. LED LAMPS - Green (Cont'd)

IN ORDER OF COLOR AND: (1) INTENSITY (2) IF TEST (3) BEAM ANGLE & (4) TYPE No.

LINE No.	4 TYPE NUMBER	1 LUMINOUS INTENSITY MIN (cd)	2 IF TEST (A)	3 BEAM ANGLE θ HI (°)	LENS TYPE	LAMP STYLE	VF MAX (V)	IF TEST (A)	PD RATED MAX (W)	IF RATED MAX (A)	PEAK WAVE-LENGTH λP (m)	TEMP. RANGE CODE - +	FEATURES	LEAD CODE	OUTLINE DRAWING
1	558-0201-003	800u	20m			Panel-mount	3.0	20m	120m	30m	560n	5A		♦	PD991a
2	558-0201-004	800u	20m			Panel-mount	3.0	20m	120m	30m	560n	5A		♦	PD991b
3	558-0201-005	800u	20m			Panel-mount	3.0	20m	120m	30m	560n	5A		♦	PD991c
4	558-0201-006	800u	20m			Panel-mount	3.0	20m	120m	30m	560n	5A		♦	PD990d
5	558-0201-007	800u	20m			Panel-mount	3.0	20m	120m	30m	560n	5A		♦	PD990e
6	LED3521	0.8m	20m	100	Diffused	Rectangular	3.0	20m	120m	30m	565n	5A			PD262g
7	LT3233G	800u	20m		Diffused	Rectangular	2.8	20m	105m	30m	565n	48		♦	PD262b
8	ORL5253	0.8m	20m	65		Side-mount	3.0	20m	120m	35m	565n	5A			PD507 Ø
9	HLMP1501	0.8m	20m		Diffused	T-1	3.0	20m	120m	30m	565n	5A		B	PD77h
10	HP5082-4984	800u	20m	60	Diffused	T-1	3.0	20m	120m	30m	565n	5A		B	PD77 Ø
11	MG51C	800u	20m	50	Water-clear	T-1	3.0	20m	105m	35m	565n	5A		A	PD258
12	MG51D	800u	20m	65	Diffused	T-1	3.0	20m	105m	35m	565n	5A		A	PD258
13	MG51T	800u	20m	50	Transparent	T-1	3.0	20m	105m	35m	565n	5A		A	PD258
14	MG51W	800u	20m	65	Milk-white	T-1	3.0	20m	105m	35m	565n	5A		A	PD258
15	MGB51T	800u	20m	20	Transparent	T-1	3.0	20m	105m	35m	565n	5A		B	PD16
16	LST4253	800u	20m	80	Diffused	T-1 3/4	3.0	20m	120m	40m	565n	5A		A	PD16ag
17	MGB51C	800u	20m	20	Water-clear	T-1 3/4	3.0	20m	105m	35m	565n	5A		B	PD16j
18	MGB51D	800u	20m	40	Diffused	T-1 3/4	3.0	20m	105m	35m	565n	5A		B	PD16j
19	MGB51W	800u	20m	40	Milk-white	T-1 3/4	3.0	20m	105m	35m	565n	5A		B	PD16j
20	MGB52D	800u	20m	40		T-1 3/4	3.0	20m			565n				PD258a
21	1N6094	800u	25m	80		Herm. Can	3.0	25m	120m	35m	560n	5A		B	PD84 Ø
22	MSL17	800u	25m	30	Diffused	T-1	3.6	25m	150m	40m	560n	48		A	PD55 Ø
23	SEL1310G	900u	10m		Diffused	T-1 3/4	2.5	10m		30m	560n	3A		A	PD280e
24	LA50421	900u	20m	24	Diffused		2.0	10m			567n			A	PD1247e
25	LA50521	900u	20m	15	Diffused		2.0	10m			567n			A	PD1247e
26	LST5254	900u	20m	24	Diffused		3.0	20m	120m	35m	565n	5A		A	PD50r Ø
27	LST5254R5	0.9m	20m	24			5.0	20m	120m	35m	565n	5A	Built-In Resistor		PD50r Ø
28	LST5254R10	0.9m	20m	24			10	20m	120m	35m	565n	5A	Built-In Resistor		PD50r Ø
29	SLP253B	900u†	20m		Diffused		2.1	20m	70m	25m	565n	28		A	PD1301
30	ORL5254	0.9m	20m	24		Side-mount	3.0	20m	120m	35m	565n	5A			PD507 Ø
31	TLBG5410	1.0m		80	Diffused	T-1 3/4			200m	30m	565n	47	Blinking Freq 3Hz		PD1205
32	LG3369FO	1.0m	2.0m	60	Diffused	T-1	2.7	2.0m	20m	7.5m	565n	5A%	IC Compatible	A	PD279c Ø
33	HLMP1790	1.0m	2.0m	50	Diffused	T-1 1/2	2.2	2.0m	24m	7.0m	565n	5A			PD1150
34	LG5469FO	1.0m	2.0m	50	Diffused	T-1 3/4	2.7	2.0m	20m	7.5m	565n	5A%	IC Compatible	A ♦	PD16ah Ø
35	TLLG5401	1.0m	2.0m	25	Diffused	T-1 3/4	2.4	2.0m	20m	7.0m	565n	XA§		A	PD1205
36	XC485	1.0m	3.2m	30	Diffused	T-1 3/4	2.8	10m	120m	35m	565n	5A		B	PD16ad Ø
37	SLP245B	1.0m†	5.0m		Diffused		2.1	20m	70m	25m	565n	28		A	PD1293e
38	CQV81L2(A)	1.0m	10m	100	Diffused		3.0	10m	180m%	60m	565n	A §	Octagonal		PD262m
39	HLMP1503-010	1.0m	10m	60	Diffused		3.0	10m	135n	30m	565n	2A			PD1057c
40	HLMP1503-101	1.0m	10m	60	Diffused		3.0	10m	135n	30m	565n	2A			PD1057d
41	HLMP1840	1.0m	10m	140	Diffused		3.0	10m	135m	25m	565n	2A			PD1338
42	HLMP1841	1.0m	10m	140	Diffused		3.0	10m	35m	25m	565n	2A			PD1338
43	HLMP6500-011	1.0m	10m	90	Diffused		3.0	10m	135m	30m	565n	2A		A	PD1340a
44	HLMP6500-021	1.0m	10m	90	Diffused		3.0	10m	135m	30m	565n	2A		A	PD1341a
45	HLMP-L550	1.0m	10m	140	Diffused		3.0	10m	135m	30m	565n	2A		A	PD1339
46	LTL5233	1.0m	10m	64	Diffused		2.8	20m	100m	30m	565n	5A		♦	PD1361
47	SG206T	1.0m	10m				2.6	10m	100m	40m	565n	4A%		A	PD1242
48	CQX11II	1.0m	10m	40		Arch	3.0	10m	120m	30m	560n	XA§		A	PD431
49	TLSG3201	1.0m	10m	100	Diffused	Cylindrical	3.0	10m	100m	30m	565n	5A%			PD1191
50	GL56	1.0m	10m	40	Diffused	Low-dome	3.5	20m	80m	25m	565n	5A%	Miniature Axial	B ♦	PD174 Ø
51	CQW61-2(A)	1.0m	10m	110	Diffused	Panel-mount	3.0	10m	180m%	60m	565n	A §		A	PD1082 ⊘
52	CQW61L2(A)	1.0m	10m	110	Diffused	Panel-mount	3.0	10m	180m%	60m	565n	A §		A	PD1084 ⊘
53	CQV71A2(A)	1.0m	10m	100	Diffused	Rectangular	3.0	10m	180m%	60m	565n	A §		A	PD1085 ⊘
54	CQV71AL2(A)	1.0m	10m	100	Diffused	Rectangular	3.0	10m	180m%	60m	565n	A §		A	PD1086 ⊘
55	CQW11B2(A)	1.0m	10m	100	Diffused	Rectangular	3.0	10m	180m%	60m	565n	A §		A	PD922 ⊘
56	CQW11BL2(A)	1.0m	10m	100	Diffused	Rectangular	3.0	10m	180m%	60m	565n	A §		A	PD922 ⊘
57	SG263D	1m	10m			Rectangular	2.5	10m	100m	40m	565n	4A		A	PD1033
58	TLSG2100	1.0m	10m	100	Diffused	Rectangular	3.0	20m	100m	50m	565n	5A%			PD489c
59	TLSG3301	1.0m	10m	100	Diffused	Rectangular	3.0	10m	100m	30m	565n	5A%			PD1192
60	TLSG5101	1.0m	10m	100	Diffused	Rectangular	3.0	20m	100m	30m	565n	5A%			PD627
61	TLSG5301	1.0m	10m	100	Diffused	Rectangular	3.0	10m	100m	30m	565n	5A%			PD629
62	CQS95-2	1.0m	10m	60	Diffused	T-1	2.8	20m	90m	30m	565n	A §		A	PD322c Ø
63	HLMP-K600	1.0m	10m	60	Diffused	T-1	3.0	10m	135m	30m	555n	2A		B	PD77m
64	SL5002(A)	1m	10m	60		T-1	3.0	10m		35m	565n	4A%			PD77p
65	LTL233	1.0m	10m	54	Diffused	T-1 3/4	2.8	20m	100m	30m	565n	5A		♦	PD1211
66	LTL234	1.0m	10m	32	Transparent	T-1 3/4	2.8	20m	100m	30m	565n	5A		♦	PD1211
67	NSC3090	1.0m	10m	90	Diffused	T-1 3/4	2.8	10m	120m	35m	565n	5A			PD1083 Ø
68	NSC3091	1.0m	10m	60	Transparent	T-1 3/4	2.8	10m	120m	30m	565n	5A			PD1083 Ø
69	TLSG5201	1.0m	10m	100	Diffused	T-1 3/4	3.0	20m	100m	30m	565n	5A%			PD628
70	HLMP6500	1m	10m	70		T-3/4	3.0	10m	120m	30m	565n	5A			PD180
71	HLMP6520	1.0m	10m	70		T-3/4	3.0	10m	120m	30m	565n	5A		A	PD180a
72	HLMP-Q600	1.0m	10m	90	Diffused	T-3/4	3.0	10m	135m	30m	555n	2A		A	PD180a
73	SG206T(1)	1.0m	10m			T-3/4	2.6	10m		40m	565n	4A%		A	PD947
74	TLSG3401	1.0m	10m	100	Diffused	Triangular	3.0	10m	100m	30m	565n	5A%			PD1193
75	TLSG5401	1.0m	10m	100	Diffused	Triangular	3.0	10m	100m	30m	565n	5A%			PD630
76	MT130HLY	1.0m	15m	50	Diffused		2.8	20m	70m	25m	585n	27	Wire-Wrap Leads		PD258b
77	547-2301	1.0m	20m				3.0	20m		25m	565n	5A			PD378
78	555-2301	1.0m†	20m				3.0	20m		25m	565n	5A			None
79	GL4NG2	1.0m	20m				2.8	20m	85m	30m	565n	28		A	PD279b Ø
80	GL9NG24	1.0m	20m				2.8	20m	85m	30m	565n	28			None ⊘
81	LED6287	1.0m	20m	50			3.0	20m	200m	60m	565n	5A			PD431a
82	LN348GPH	1.0m†	20m		Diffused		2.2	20m	90m	30m	565n	28		A	PD557a
83	LN349GPH	1.0m†	20m		Diffused		2.2	20m	90m	30m	565n	28		A	PD557c
84	LN351GCPP(G)	1.0m†	20m		Diffused		2.2	20m	90m	30m	565n	28		A	PD489b
85	MV5274C	1.0m†	20m	90			3.0	20m	105m	35m	565n	5A		A	PD16c Ø
86	OPL71	1.0m	20m	80			3.0	20m	100m	50m	565n	5A			PD257f
87	SLP223B	1.0m†	20m		Diffused		2.1	20m	70m	30m	565n	2A		A	PD1325a
88	SLP224B	1.0m†	20m		Diffused		2.1	20m	70m	30m	565n	2A		A	PD1325
89	SLP275B	1.0m†	20m		Diffused		2.1	20m	70m	25m	565n	28		A	PD1316
90	SLP277B	1.0m†	20m		Diffused		2.1	20m	70m	25m	565n	28		A	PD1318
91	SVD201	1.0m	20m		Diffused		2.8	20m	50m	30m	560n	27		B	PD16t Ø
92	LDG5901	1.0m	20m	100	Diffused	Cylindrical	3.0	20m	200m	60m	560n	5A%	Tr/Tf 50ns Typ	♦	PD932 Ø
93	SBG2531DEB	1.0m	20m		Diffused	Cylindrical	2.5	20m	125m	50m	555n	38		A	PD589
94	SVD204	1.0m	20m		Water-clear	Herm. Can	2.8	20m	50m	30m	560n	2A		B	TO-18 Ø
95	CMD369	1.0m	20m		Diffused	Rectangular	2.6	20m	120m	50m	565n	48			PD1151
96	HP5082-4970	1.0m	20m	100	Diffused	Rectangular	3.0	25m	120m	30m	565n	5A		A	PD262 ⊘
97	LDG3901	1.0m	20m	100	Diffused	Rectangular	3.0	20m	200m	60m	560n	5A%	T-1 3/4 Size	♦	PD530 ⊘
98	MV52124	1.0m	20m			Rectangular	3.0	20m	105m	35m	565n	5A		B	PD319 ⊘
99	LTL33231AA	1.0m	20m	100		Square	2.8	20m	100m	30m	565n	5A		♦	PD1233a
100	HLMP1550	1.0m	20m	55		T-1	3.0	20m	135m	90m	565n	5A	Integ. Resistor		PD77
101	MG32D	1.0m	20m		Diffused	T-1	3.0	20m			565n				PD77h
102	SLP214B	1.0m†	20m		Diffused	T-1	2.1	20m	70m	30m	565n	2A		A	PD1061
103	SVD202	1.0m	20m		Diffused	T-1	2.8	20m	50m	30m	560n	28		B	PD118a Ø
104	LST4254	1.0m	20m	65	Diffused	T-1 3/4	3.0	20m	120m	40m	565n	5A		A	PD16ag
105	SL5005	1m	20m	50		T-1 3/4	3.0	10m		35m	565n	4A%			PD90c
106	TLBG5400	1.0m	20m	80	Diffused	T-1 3/4			200m	30m	565n	47	Blink/Continuous		PD1000
107	SBG2201	1.0m	20m		Water-clear	T-5/8	2.5	20m	100m	40m	555n	38		B	PD1110
108	SBG2221	1.0m	20m		Transparent	T-5/8	2.5	20m	100m	40m	555n	38		B	PD1110
109	HLMP0500	1.0m	25m	100	Diffused	Rectangular	3.0	25m	120m	30m	565n	5A		A	PD262 ⊘
110	HLMP4740	1.2m	2.0m	50	Diffused	T-1 1/2	2.2	2.0m	24m	7.0m	565n	5A			PD940a

SYMBOLS AND CODES EXPLAINED IN INTERPRETER

2. LED LAMPS - Green (Cont'd)

IN ORDER OF COLOR AND: (1) INTENSITY (2) IF TEST (3) BEAM ANGLE & (4) TYPE No.

LINE No.	4 TYPE NUMBER	1 LUMINOUS INTENSITY MIN (cd)	2 IF TEST (A)	3 BEAM ANGLE θ HI (°)	LENS TYPE	LAMP STYLE	VF MAX (V)	IF TEST (A)	PD RATED MAX (W)	IF RATED MAX (A)	PEAK WAVE-LENGTH λP (m)	TEMP. RANGE CODE - +	FEATURES	LEAD CODE	OUTLINE DRAWING
1	MT110G	1.2m	10m		Diffused	Rectangular	2.8	20m	70m	25m	565n	27		A	PD1352
2	SEL2310G	1.2m	10m	100	Diffused	T-1	2.5	10m	90m	30m	560n	3A		A	PD322
3	LTL907LK	1.2m	20m	140	Water-clear		2.8	20m	100m	30m	565n	2A	Mini	J	PD1140
4	SLP239B	1.2m†	20m		Diffused		2.1	20m	70m	25m	565n	28		A	PD948a
5	SLP241B	1.2m†	20m		Diffused		2.1	20m	70m	25m	565n	28		A	PD1299
6	SLP276B	1.2m†	20m		Diffused		2.1	20m	70m	25m	565n	28		A	PD1317
7	SBG2434DEB	1.2m	20m		Diffused	Cylindrical	2.5	20m	125m	50m	555n	38		A	PD588
8	OSL11S	1.2m	40m	100			3.7	40m	150m	50m	560n	5A		A	PD58 Ø
9	OSL11	1.2m	40m	100		Low-dome	3.7	40m	150m	50m	560n	5A		A	PD59 Ø
10	OPL17	1.3m	10m		Diffused		2.5	10m	180m	50m	555n	28			PD257g
11	OPL17-1	1.3m	10m				2.5	10m	180m	50m	555n	28			PD257g
12	OPL17-2	1.3m	10m		Diffused		2.5	10m	180m	50m	555n	28			PD257g
13	OPL17-3	1.3m	10m		Water-clear		2.5	10m	180m	50m	555n	28			PD257g
14	LED1221	1.3m	10m		Diffused	Cylindrical	2.5	10m	180m	50m	555n	28		A	PD903
15	LED1222	1.3m	10m		Diffused	Cylindrical	2.5	10m	180m	50m	555n	28		A	PD903
16	LED1223	1.3m	10m		Water-clear	Cylindrical	2.5	10m	180m	50m	555n	28		A	PD903
17	LED1224	1.3m	10m		Water-clear	Cylindrical	2.5	10m	180m	50m	555n	28		A	PD903
18	LED1321	1.3m	10m		Diffused	Cylindrical	2.5	10m	180m	50m	555n	28		A	PD904
19	LED1322	1.3m	10m		Diffused	Cylindrical	2.5	10m	180m	50m	555n	28		A	PD904
20	LED1323	1.3m	10m		Water-clear	Cylindrical	2.5	10m	180m	50m	555n	28		A	PD904
21	LED1324	1.3m	10m		Water-clear	Cylindrical	2.5	10m	180m	50m	555n	28		A	PD904
22	LTL1232A	1.3m†	10m		Diffused	Cylindrical	2.8	20m			565n			A	PD1217
23	LED1022	1.3m	10m		Diffused	Rectangular	2.5	10m	180m	50m	555n	28		A	PD909a
24	LED1023	1.3m	10m		Water-clear	Rectangular	2.5	10m	180m	50m	555n	28		A	PD909a
25	LED1024	1.3m	10m		Water-clear	Rectangular	2.5	10m	180m	50m	555n	28		A	PD909a
26	LED1421	1.3m	10m		Diffused	Rectangular	2.5	10m	180m	50m	555n	28		A	PD905
27	LED1422	1.3m	10m		Diffused	Rectangular	2.5	10m	180m	50m	555n	28		A	PD905
28	LED1423	1.3m	10m		Water-clear	Rectangular	2.5	10m	180m	50m	555n	28		A	PD905
29	LED1424	1.3m	10m		Water-clear	Rectangular	2.5	10m	180m	50m	555n	28		A	PD905
30	LED1621	1.3m	10m		Diffused	Rectangular	2.5	10m	180m	50m	555n	28		A	PD907
31	LED1622	1.3m	10m		Diffused	Rectangular	2.5	10m	180m	50m	555n	28		A	PD907
32	LED1623	1.3m	10m		Water-clear	Rectangular	2.5	10m	180m	50m	555n	28		A	PD907
33	LED1624	1.3m	10m		Water-clear	Rectangular	2.5	10m	180m	50m	555n	28		A	PD907
34	LED2021	1.3m	10m		Diffused	Rectangular	2.5	10m	180m	50m	555n	28		A	PD909
35	LED2022	1.3m	10m		Diffused	Rectangular	2.5	10m	180m	50m	555n	28		A	PD909
36	LED2023	1.3m	10m		Water-clear	Rectangular	2.5	10m	180m	50m	555n	28		A	PD909
37	LED2024	1.3m	10m		Water-clear	Rectangular	2.5	10m	180m	50m	555n	28		A	PD909
38	LED2121	1.3m	10m		Diffused	Rectangular	2.5	10m	180m	50m	555n	28		A	PD909b
39	LED2122	1.3m	10m		Diffused	Rectangular	2.5	10m	180m	50m	555n	28		A	PD909b
40	LED2123	1.3m	10m		Water-clear	Rectangular	2.5	10m	180m	50m	555n	28		A	PD909b
41	LED2124	1.3m	10m		Water-clear	Rectangular	2.5	10m	180m	50m	555n	28		A	PD909b
42	SG262D	1.3m	10m			Rectangular	2.5	10m	100m	40m	565n	4A		A	PD1033
43	LED1921	1.3m	10m		Diffused	Square	2.5	10m	180m	50m	555n	28		A	PD908
44	LED1922	1.3m	10m		Diffused	Square	2.5	10m	180m	50m	555n	28		A	PD908
45	LED1923	1.3m	10m		Water-clear	Square	2.5	10m	180m	50m	555n	28		A	PD908
46	LED1924	1.3m	10m		Water-clear	Square	2.5	10m	180m	50m	555n	28		A	PD908
47	LED1821	1.3m	10m		Diffused	T-1 3/4	2.5	10m	180m	50m	555n	28			PD16a
48	LED1822	1.3m	10m		Diffused	T-1 3/4	2.5	10m	180m	50m	555n	28			PD16a
49	LED1823	1.3m	10m		Water-clear	T-1 3/4	2.5	10m	180m	50m	555n	28			PD16a
50	LED1824	1.3m	10m			T-1 3/4	2.5	10m	180m	50m	555n	28			PD16a
51	SDL17L1	1.3m	10m			T-1 3/4	2.5	10m	180m	50m	555n	28			PD16af
52	SDL17L2	1.3m	10m		Diffused	T-1 3/4	2.5	20m	180m	50m	555n	28			PD16af
53	SDL17L3	1.3m	10m		Water-clear	T-1 3/4	2.5	10m	180m	50m	555n	28			PD16af
54	SDL17L	1.3m	10m		Diffused	T-1 3/4	2.5	10m	180m	50m	555n	28			PD16af
55	LED1121	1.3m	10m		Diffused	Triangular	2.5	10m	180m	50m	555n	28		A	PD902
56	LED1122	1.3m	10m		Diffused	Triangular	2.5	10m	180m	50m	555n	28		A	PD902
57	LED1123	1.3m	10m		Water-clear	Triangular	2.5	10m	180m	50m	555n	28		A	PD902
58	LED1124	1.3m	10m		Water-clear	Triangular	2.5	10m	180m	50m	555n	28		A	PD902
59	LED1521	1.3m	10m		Diffused	Triangular	2.5	10m	180m	50m	555n	28		A	PD906
60	LED1522	1.3m	10m		Diffused	Triangular	2.5	10m	180m	50m	555n	28		A	PD906
61	LED1523	1.3m	10m		Water-clear	Triangular	2.5	10m	180m	50m	555n	28		A	PD906
62	LED1524	1.3m	10m		Water-clear	Triangular	2.5	10m	180m	50m	555n	28		A	PD906
63	GL3PG5	1.3m	20m				2.8	20m	85m	30m	555n	28			PD279
64	TIL232-2	1.3m	20m	60	Diffused	T-1	3.2	20m		50m	560n	5A		♦	PD16ae
65	SEL2310E	1.4m	10m	40	Water-clear		2.5	10m	90m	30m	560n	3A		A	PD322 Ø
66	MT470G	1.4m	15m	120	Transparent		2.8	20m	70m	25m	565n	27	Truncated Lens	♦	PD1201
67	MT610G	1.4m	15m	120	Transparent		2.8	20m	70m	25m	565n	27	Concave	A	PD1348
68	TLG108A	1.4m	15m	180	Transparent		2.8	20m	85m	30m	565n	27		♦	PD1102 Ø
69	TLG147	1.4m	15m	120	Transparent		2.8	20m	70m	25m	565n	27		♦	PD1106a Ø
70	TLG115A	1.4m	15m	42	Transparent	T-1 3/4	2.8	20m	100m	30m	565n	27		♦	PD215a Ø
71	SLF201C	1.4m†	20m		Transparent		2.2	20m	70m	30m	565m	26		♦	PD1331
72	SLF301C	1.4m†	20m		Transparent		2.2	20m	70m	30m	565m	26		♦	PD1331
73	HLMP1640-010	1.5m		60	Diffused		7.5			15m	565n	28	Built-In Resistor		PD1057c
74	HLMP1640-101	1.5m		60	Diffused		7.5			15m	565n	28	Built-In Resistor		PD1057d
75	HLMP5080	1.5m		75	Diffused		7.5			15m	565n	28	Built-In Resistor		PD68d
76	HLMP1640	1.5m		60	Diffused	T-1	7.5			15m	565n	28	Built-In Resistor		PD77m
77	HLMP1641	1.5m		60	Diffused	T-1 1/2	15			20m	565n	28	Built-In Resistor		PD940
78	HLMP3680	1.5m		75	Diffused	T-1 1/2	7.5		75m	15m	565n	28	Built-In Resistor		PD940
79	HLMP3681	1.5m		75	Diffused	T-1 1/2	15			20m	565n	28	Built-In Resistor		PD940
80	5253R5	1.5m†		65		T-1 3/4	5.0	20m		35m	565n		Built-In Resistor		PD379
81	5253R10	1.5m†		65		T-1 3/4	10	20m		35m	565n		Built-In Resistor		PD379
82	LTL5239	1.5m	10m	150	Diffused		2.8	20m	100m	30m	565n	5A		♦	PD1213a
83	MT620G	1.5m	10m	90	Transparent		2.8	20m	70m	25m	565n	27	For Backlighting	A	PD1350
84	SG225D	1.5m	10m		Diffused		2.5	10m	100m	40m	565n	4A%	Max Vr 5V	A	PD1373a
85	SG815T	1.5m	10m		Transparent		2.5	10m	100m	40m	555n	4A%	Max Vr 5V	A	PD1373b
86	LTL13239A	1.5m†	10m		Diffused	Rectangular	2.8	20m			565n			A	PD1231
87	SG261D(A)	1.5m	10m			Rectangular	2.5	10m	100m	40m	565n	4A		A	PD1032
88	LTL4231	1.5m	10m	40	Diffused	T-1	2.8	20m	100m	30m	565n	5A		♦	PD1212
89	LTL5133	1.5m	10m	65	Diffused	T-1 3/4	2.8	20m	100m	30m	565n	5A		♦	PD1211
90	MT2230G	1.5m	15m	20	Transparent		2.8	20m	70m	25m	565n	27	Side View	A	PD915
91	TLG251	1.5m	15m				2.8	20m	140m	25m	565n	37		A	None
92	L411DG	1.5m	20m	100	Diffused		3.0	20m	80m	25m	565n	5A		B	PD174
93	L511DG	1.5m	20m	100	Diffused		3.0	20m	135m	30m	565n	5A			PD1298
94	LA5023D	1.5m	20m	15	Water-clear		2.0	10m			567n			A	PD1247e
95	LA5523D	1.5m	20m	25	Water-clear		2.0	10m			567n			A	PD1249
96	LN342GP	1.5m†	20m		Diffused		2.2	20m	90m	30m	565n	28		A	PD489a
97	LN344GP	1.5m†	20m		Diffused		2.2	20m	90m	30m	565n	28		A	PD361g
98	LST5253R	1.5m†	20m	65	Diffused		3.0 §	20m	120m	35m	565n	5A	Built-In Resistor		PD50r Ø
99	MV5253	1.5m†	20m	65	Diffused		3.0	20m	105m	35m	565n	5A		A	PD16p Ø
100	NSL5274	1.5m	20m		Diffused		3.0	20m	100m%	50m	585n	4A		B	PD284c
101	SLP261B	1.5m†	20m		Diffused		2.1	20m	70m	25m	565n	28		A	PD1299a
102	SLP262B	1.5m†	20m		Diffused		2.1	20m	70m	25m	565n	28		A	PD1300b
103	SLP278C	1.5m†	20m		Transparent		2.1	20m	70m	25m	565n	28		A	PD489d
104	TLG250	1.5m	20m				2.8	30m	85m	30m	565n	37		A	PD493
105	PG3665S	1.5m	20m		Transparent	Cylindrical	2.5	20m	125m	50m	560n	38	Lens:Pale Green		PD1395
106	LN330GPP	1.5m†	20m		Diffused	Rectangular	2.2	20m	90m	30m	565n	28		A	PD439
107	LN342GPH	1.5m†	20m		Diffused	Rectangular	2.2	20m	90m	30m	565n	28		A	PD913
108	SPG4652REC	1.5m	20m		Diffused	Rectangular	2.5	20m	125m	50m	565n	38			PD1375
109	SPG5551REC	1.5m	20m		Diffused	Rectangular	2.5	20m	125m	50m	565n	38			PD1376
110	SPG5552REC	1.5m	20m		Diffused	Rectangular	2.5	20m	125m	50m	565n	38			PD1377

SYMBOLS AND CODES EXPLAINED IN INTERPRETER

2. LED LAMPS - Green (Cont'd)

IN ORDER OF COLOR AND: (1) INTENSITY (2) IF TEST (3) BEAM ANGLE & (4) TYPE No.

LINE No.	4 TYPE NUMBER	1 LUMINOUS INTENSITY MIN (cd)	2 IF TEST (A)	3 BEAM ANGLE θ HI (°)	LENS TYPE	LAMP STYLE	VF MAX (V)	IF TEST (A)	PD RATED MAX (W)	IF RATED MAX (A)	PEAK WAVE-LENGTH λP (m)	TEMP. RANGE CODE - +	FEATURES	LEAD CODE	OUTLINE DRAWING
1	SPG5556REC	1.5m	20m		Diffused	Rectangular	2.5	20m	125m	50m	565n	38			PD1378
2	PG2651KY	1.5m	20m		Diffused	Square	2.5	20m	125m	50m	565n	38			PD1380
3	SG241D	1.5m	20m		Diffused	Square	2.6	20m	100m	40m	565n	4A%	Max Vr 5V	A	PD1374
4	SPG5551SQR	1.5m	20m		Diffused	Square	2.5	20m	125m	50m	565n	38			PD1112
5	AND740G	1.5m†	20m		Transparent	T-1	3.0	20m	120m	20m	565n	48			PD257b Ø
6	AND740P	1.5m†	20m		Transparent	T-1	3.0	20m	120m	20m	550n	48			PD257b Ø
7	AND743G	1.5m†	20m		Water-clear	T-1	3.0	20m	120m	20m	565n	48			PD257b Ø
8	AND743P	1.5m†	20m		Water-clear	T-1	3.0	20m	120m	20m	550n	48			PD257b Ø
9	AND744G	1.5m†	20m		Diffused	T-1	3.0	20m	120m	20m	565n	48			PD257b Ø
10	AND744P	1.5m†	20m		Diffused	T-1	3.0	20m	120m	20m	550n	48			PD257b Ø
11	AND746G	1.5m†	20m		Milk-white	T-1	3.0	20m	120m	20m	565n	48			PD257b Ø
12	AND746P	1.5m†	20m		Milk-white	T-1	3.0	20m	120m	20m	550n	48			PD257b Ø
13	MV52641	1.5m	20m	90		T-1	3.0	20m	120m	30m	565n	5A		B	PD77m
14	AND750G	1.5m†	20m		Transparent	T-1 3/4	3.0	20m	120m	20m	565n	48		A	PD16y Ø
15	AND750P	1.5m†	20m		Transparent	T-1 3/4	3.0	20m	120m	20m	550n	48		A	PD16y Ø
16	AND753G	1.5m†	20m		Water-clear	T-1 3/4	3.0	20m	120m	20m	565n	48		A	PD16y Ø
17	AND753P	1.5m†	20m		Water-clear	T-1 3/4	3.0	20m	120m	20m	550n	48		A	PD16y Ø
18	AND754G	1.5m†	20m		Diffused	T-1 3/4	3.0	20m	120m	20m	565n	48		A	PD16y Ø
19	AND754P	1.5m†	20m		Diffused	T-1 3/4	3.0	20m	120m	20m	550n	48		A	PD16y Ø
20	SPG5552TRI	1.5m	20m		Diffused	Triangular	2.5	20m	125m	50m	565n	38			PD1111
21	521-9266	1.5m	25m	100		Rectangular	3.0	25m	120m	20m	565n	5A			PD262
22	HLMP0501	1.5m	25m	100	Diffused	Rectangular	3.0	25m	120m	30m	565n	5A		A	PD262 ☑
23	MV52	1.5m†	50m			T-3/4	4.5	50m	225m	50m	565n	5A		B	PD36c
24	CQV81L3(A)	1.6m	10m	100	Diffused		3.0	10m	180m%	60m	565n	A §	Octagonal	A	PD262m
25	HLMP-L551	1.6m	10m	140	Diffused		3.0	10m	135m	30m	565n	2A		A	PD1339
26	CQX11III	1.6m	10m	40		Arch	3.0	10m	120m	30m	560n	5A%		A	PD431
27	TLYG5200	1.6m	10m		Transparent	Cylindrical	3.0	20m	100m	30m	565n	XA§	For Fiber Optics		PD1385
28	CQW61-3(A)	1.6m	10m	110	Diffused	Panel-mount	3.0	10m	180m%	60m	565n	A §		A	PD1082 ☑
29	CQW61L3(A)	1.6m	10m	110	Diffused	Panel-mount	3.0	10m	180m%	60m	565n	A §		A	PD1084 ☑
30	CQV71A3(A)	1.6m	10m	100	Diffused	Rectangular	3.0	10m	180m%	60m	565n	A §		A	PD1085 ☑
31	CQV71AL3(A)	1.6m	10m	100	Diffused	Rectangular	3.0	10m	180m%	60m	565n	A §		A	PD1086 ☑
32	CQW11B3(A)	1.6m	10m	100	Diffused	Rectangular	3.0	10m	180m%	60m	565n	A §		A	PD922 ☑
33	CQW11BL3(A)	1.6m	10m	100	Diffused	Rectangular	3.0	10m	180m%	60m	565n	A §		A	PD922 ☑
34	TLSG2101	1.6m	10m	100	Diffused	Rectangular	3.0	20m	100m	50m	565n	5A%			PD489c
35	CQS95-3	1.6m	10m	60	Diffused	T-1	2.8	20m	90m	30m	565n	A §		A	PD322c Ø
36	CQS95E	1.6m	10m	50	Diffused	T-1	2.8	20m	90m%	40m	565n	A §		A	PD1171 Ø
37	CQS95L	1.6m	10m	50	Diffused	T-1	2.8	20m	90m%	30m	565n	A §		A	PD1172 Ø
38	CQY94B3(A)	1.6m	10m	70	Diffused	T-1	3.0	10m	180m%	60m	565n	A §		A	PD232j Ø
39	CQY94BL3	1.6m	10m	70	Diffused	T-1	3.0	10m	180m%	60m	565n	A §		A	PD232k Ø
40	CQY95B3(A)	1.6m	10m	70	Transparent	T-1	3.0	10m	150m	60m	565n	A §		A	PD77 Ø
41	CQS84L3	1.6m	10m	70	Diffused	T-1 1/2	2.6	10m	180m%	60m	565n	A §		A	PD15e Ø
42	HLMP-D600	1.6m	10m		Diffused	T-1 1/2	3.0	10m	135m	30m	555n	2A			PD940a
43	TLHG6400	1.6m	10m	60	Diffused	T-1 3/4	3.0	10m	100m	30m	565n	5A%	High-efficiency	A	PD280k
44	521-9173	1.6m	20m	100	Diffused		3.0	20m	120m	50m	565n	5A		A	PD50c Ø
45	521-9175	1.6m	20m	100	Diffused		3.0	20m	120m	50m	565n	5A		A	PD52c Ø
46	521-9253	1.6m	20m	45			3.0	20m	120m	50m	565n	5A		A	PD50c Ø
47	550-0204	1.6m	20m	70	Diffused		3.0	20m	120m	50m	565n	5A		A	PD66 ☑
48	550-0205	1.6m	20m	70	Diffused		3.0	20m	120m	50m	565n	5A		A	PD67 ☑
49	LDG5902	1.6m	20m	100	Diffused	Cylindrical	3.0	20m	200m	60m	560n	5A%	Tr/Tf 50ns typ	♦	PD932 Ø
50	559-0201-001	1.6m	20m			Panel-mount	3.0	20m	120m	30m	560n	5A		♦	PD991
51	559-0201-003	1.6m	20m			Panel-mount	3.0	20m	120m	30m	560n	5A		♦	PD991a
52	559-0201-004	1.6m	20m			Panel-mount	3.0	20m	120m	30m	560n	5A		♦	PD991b
53	559-0201-005	1.6m	20m			Panel-mount	3.0	20m	120m	30m	560n	5A		♦	PD991c
54	559-0201-006	1.6m	20m			Panel-mount	3.0	20m	120m	30m	560n	5A		♦	PD991d
55	559-0201-007	1.6m	20m			Panel-mount	3.0	20m	120m	30m	560n	5A		♦	PD991e
56	LDG3902	1.6m	20m	100	Diffused	Rectangular	3.0	20m	200m	60m	560n	5A%	T-1 3/4 Size	♦	PD530 ☑
57	550-0206	1.6m	20m	70	Diffused	Side-mount	3.0	20m	120m	50m	565n	5A		A	PD68 ☑
58	LLL19-1	1.6m	25m	18	Water-clear	T-1	3.6	25m	150m	40m	560n	48		A	PD54 Ø
59	MSL19-1	1.6m	25m	18	Water-clear	T-1	3.6	25m	150m	40m	560n	48		A	PD55 Ø
60	LTL10233W	1.7m	10m	60	Diffused		2.8	20m	100m	30m	565n	5A		A	PD1214
61	LTL633-1	1.7m	10m	60	Diffused	Panel-mount	2.8	20m	100m	30m	565n	5A	Cylindrical	B	PD1215
62	LTL533-11	1.7m	10m	60	Diffused	Side-mount	2.8	20m	100m	30m	565n	5A	Cylindrical	A	PD1216
63	LTL10233	1.7m	10m	60	Diffused	T-1 3/4	2.8	20m	100m	30m	565n	5A		A	PD1210b
64	SLP265B	1.7m†	20m		Diffused		2.1	20m	70m	25m	565n	28		A	PD1302a
65	SEL1310E	1.8m	10m		Water-clear	T-1 3/4	2.5	10m		30m	560n	3A		A	PD280e
66	LDG2330	1.8m†	20m	70	Water-clear	Rectangular	3.0	20m	200m	30m	560n	5A%	Surface Mount LED	J	PD1140 ☑
67	521-9201	2.0m†					2.0	10m		35m	565n			A	PD208 Ø
68	LLL17	2.0m†		30	Diffused	T-1	2.4	25m		40m	565n				PD54 Ø
69	NSC556G2	2.0m	10m	30	Diffused		2.8	10m	115m	40m	565n	5A		A	PD18c Ø
70	SG203DA	2.0m	10m		Diffused		2.5	10m	100m	40m	565n	4A%		A	PD1239b
71	LGB480	2.0m†	10m	100	Diffused	Rectangular	2.6	10m	150m	45m	560n	5A%		♦	PD262k ☑
72	HLMP-K601	2.0m	10m	60	Diffused	T-1	3.0	10m	135m	30m	555n	2A		B	PD77m
73	LTL232	2.0m†	10m		Transparent	T-1	2.8	20m			565n			A	PD1236
74	SG203DA(3)	2m	10m			T-1 1/2	2.6	10m		40m	565n	4A%		A	PD280j
75	NSC554G	2.0m	10m	24	Transparent	T-1 3/4	2.8	10m	115m	40m	565n	5A		A	PD18c Ø
76	NSC5549G	2.0m	10m	24	Transparent	T-1 3/4	2.8	10m	120m	35m	565n	5A		A	PD16ad Ø
77	NSC5569G2	2.0m	10m	30	Diffused	T-1 3/4	2.8	10m	120m	35m	565n	5A		A	PD16ad Ø
78	SG813D	2.0m	10m		Diffused	T-1 3/4	2.5	10m	100m	40m	555n	4A%	Max Vr 5V	A	PD1239
79	SG813T	2.0m	10m		Transparent	T-1 3/4	2.5	10m	100m	40m	555n	4A%	Max Vr 5V	A	PD1239
80	MT263G	2.0m	15m	130	Transparent		2.8	20m	70m	25m	565n	27	For Backlighting	A	PD1349
81	L311DG	2.0m	20m	60	Diffused		3.0	10m	120m	30m	562n	5A			PD77q
82	L613DG	2.0m	20m	90			3.0	10m	120m	30m	562n	5A	Stackable		PD1056a
83	LN350GPH	2m†	20m		Diffused		2.2	20m	90m	30m	565n	28		A	PD557b
84	LST5252	2.0m	20m	28	Water-clear		3.0	20m	120m	35m	565n	5A		A	PD50r Ø
85	LST5252R5	2.0m	20m	28			5.0	20m	120m	35m	565n	5A	Built-In Resistor		PD50r Ø
86	LST5252R10	2.0m	20m	28			10	20m	120m	35m	565n	5A	Built-In Resistor		PD50r Ø
87	MGC31D	2.0m	20m		Diffused		3.0	20m			565n				PD50ac
88	SG205D	2.0m†	20m	20	Diffused		2.5	20m	100m	40m	565n	X8§		A	PD285 Ø
89	SLP235B	2.0m†	20m		Diffused		2.1	20m	70m	25m	565n	28		A	PD1293
90	SLP236B	2.0m†	20m		Diffused		2.1	20m	70m	25m	565n	28		A	PD1293a
91	SLP264B	2.0m†	20m		Diffused		2.1	20m	70m	25m	565n	28		A	PD1293h
92	SLP271D	2.0m†	20m		Milk-white		2.1	20m	70m	25m	565n	28		♦	PD1307
93	SLP280C	2.0m†	20m		Transparent		2.1	20m	70m	25m	565n	28		A	PD1293a
94	SLP281B	2.0m†	20m		Diffused		2.1	20m	70m	25m	565n	28		A	PD1293k
95	SPG5531REC	2.0m	20m		Diffused		2.5	20m	125m	50m	565n	38		A	PD489c
96	PG5562X	2.0m	20m			Cylindrical	2.5	20m	125m	50m	560n	38			PD1394
97	CMD54124	2.0m	20m		Diffused	Rectangular	3.0	20m	105m	35m	562n	5A			PD319
98	CQN11(A)	2m	20m	110		Rectangular	3.0	20m	360m	60m	565n	58%			PD1081
99	MV54124	2.0m	20m	100		Rectangular	3.0	20m	120m	30m	562n	5A			PD319
100	SAY7851REC	2.0m	20m		Diffused	Rectangular	2.5	20m	125m	50m	580n	38			PD1379
101	SPG4632REC	2.0m	20m		Diffused	Rectangular	2.5	20m	125m	50m	565n	38			PD909c
102	SPG5532REC	2.0m	20m		Diffused	Rectangular	2.5	20m	125m	50m	565n	38			PD909c
103	SPG7851REC	2.0m	20m		Diffused	Rectangular	2.5	20m	125m	50m	565n	38			PD1379
104	ORL5252	2.0m	20m	28		Side-mount	3.0	20m	120m	35m	565n	5A			PD507 Ø
105	SPG3531SQR	2.0m	20m		Diffused	Square	2.5	20m	125m	50m	565n	38			PD1381
106	HLMP1502	2.0m	20m		Diffused	T-1	3.0	20m	120m	30m	565n	5A		B	PD77h
107	HLMP1503	2.0m	20m	60		T-1	3.0	20m	135m	30m	565n	5A		B	PD77m
108	SBG3431	2.0m	20m		Diffused	T-1	2.5	20m	125m	50m	555n	38		A	PD33
109	CMD54643	2.0m	20m	90	Diffused	T-1 1/2	3.0	20m	120m	30m	562n	5A		B	PD1150
110	MG52D	2.0m	20m		Diffused	T-1 3/4	3.0	20m			565n				PD258a

SYMBOLS AND CODES EXPLAINED IN INTERPRETER

2. LED LAMPS - Green (Cont'd)

IN ORDER OF COLOR AND: (1) INTENSITY (2) IF TEST (3) BEAM ANGLE & (4) TYPE No.

LINE No.	4 TYPE NUMBER	1 LUMINOUS INTENSITY MIN (cd)	2 IF TEST (A)	3 BEAM ANGLE θ HI (°)	LENS TYPE	LAMP STYLE	VF MAX (V)	IF TEST (A)	PD RATED MAX (W)	IF RATED MAX (A)	PEAK WAVE-LENGTH λP (m)	TEMP. RANGE CODE - +	FEATURES	LEAD CODE	OUTLINE DRAWING
1	SPG5532TRI	2.0m	20m		Diffused	Triangular	2.5	20m	125m	50m	565n	38		A	PD1111
2	CQV61II	2.2m⊠	10m	110	Diffused		3.0	10m	90m	30m	560n	5A		A	PD227
3	CQV61A-II(A)	2.2m	10m	110		Rectangular	3.0	10m	180m	60m	565n	5A%			PD1082
4	CQV61AL-II(A)	2.2m	10m	110		Rectangular	3.0	10m	180m	60m	565n	5A%			PD1084
5	550-2204	2.2m	20m				3.0	20m	105m	35m	565n	5A			PD66b ⊠
6	550-2205	2.2m	20m				3.0	20m	105m	35m	565n	5A			PD67b ⊠
7	559-2201-001	2.2m	20m			Panel-mount	3.0	20m	105m	35m	565n	5A		♦	PD991
8	559-2201-003	2.2m	20m			Panel-mount	3.0	20m	105m	35m	565n	5A		♦	PD991a
9	559-2201-004	2.2m	20m			Panel-mount	3.0	20m	105m	35m	565n	5A		♦	PD991b
10	559-2201-005	2.2m	20m			Panel-mount	3.0	20m	105m	35m	565n	5A		♦	PD991c
11	559-2201-006	2.2m	20m			Panel-mount	3.0	20m	105m	35m	565n	5A		♦	PD991d
12	559-2201-007	2.2m	20m			Panel-mount	3.0	20m	105m	35m	565n	5A		♦	PD991e
13	550-2206	2.2m	20m			Side-mount	3.0	20m	105m	35m	565n	5A			PD68b ⊠
14	521-9250	2.2m	20m	90	Diffused	T-1 1/2	3.0	20m	120m	30m	565n	5A		A	PD62c Ø
15	OPL1271	2.5m†		80	Diffused	T-1	2.5	20m		50m	565n				PD15C Ø
16	LTL33231A	2.5m†	10m		Diffused		2.8	20m			565n			A	PD1233
17	TLHG0400(A)	2.5m	10m	50	Diffused		3.0	20m	150m	30m	565n	XA§	Separate anodes	AQ	PD1182
18	LTL231	2.5m†	10m		Diffused	T-1	2.8	20m			565n			A	PD1236
19	GL3NG1	2.5m	20m				2.8	20m	85m	30m	565n	28			PD279
20	LDG5903	2.5m	20m	100	Diffused	Cylindrical	3.0	20m	200m	60m	560n	5A%	Tr/Tf 50ns Typ	♦	PD932 Ø
21	LDG3903	2.5m	20m	100	Diffused	Rectangular	3.0	20m	200m	60m	560n	5A%	T-1 3/4 Size	♦	PD530 ⊠
22	LDG1151	2.5m	20m	70	Diffused	T-1	3.0	20m	200m	60m	560n	5A%	Tr/Tf 50ns Typ	B	PD16al Ø
23	MV52642	2.5m	20m	90		T-1	3.0	20m	120m	30m	565n	5A		B	PD77m
24	LDG1251	2.5m	20m	70	Diffused	T-1 3/4	3.0	20m	200m	60m	560n	5A%	Tr/Tf 50ns Typ	♦	PD586a Ø
25	LDG5071	2.5m	20m	70	Diffused	T-1 3/4	3.0	20m	200m	60m	560n	5A%	Tr/Tf 50ns Typ	B	PD16ak Ø
26	LDG5171	2.5m	20m	70	Diffused	T-1 3/4	3.0	20m	200m	60m	560n	5A%	Tr/Tf 50ns Typ	B	PD16ak Ø
27	SLF202B	2.8m†	20m		Diffused		2.2	20m	70m	30m	565m	27		♦	PD1332
28	L45RN-G2-2112	3.0m†			Fresnel	Panel-mount	2.5	35m	100m	35m		5A			PD399a Ø
29	L45RN-G2-2312	3.0m†			Fresnel	Panel-mount	2.5	35m	100m	35m		5A			PD399 Ø
30	L45RN-G6-2112	3.0m†			Fresnel	Panel-mount	6.0	35m	100m	35m		5A			PD399a Ø
31	L45RN-G6-2312	3.0m†			Fresnel	Panel-mount	6.0	35m	100m	35m		5A			PD399 Ø
32	L45RN-G12-2112	3.0m†			Fresnel	Panel-mount	12	35m	100m	35m		5A			PD399a Ø
33	L45RN-G12-2312	3.0m†			Fresnel	Panel-mount	12	35m	100m	35m		5A			PD399 Ø
34	L45RN-G24-2112	3.0m†			Fresnel	Panel-mount	24	35m	100m	35m		5A			PD399a Ø
35	L45RN-G24-2312	3.0m†			Fresnel	Panel-mount	24	35m	100m	35m		5A			PD399 Ø
36	5254R5	3.0m†		24		T-1 3/4	5.0	20m		35m	565n		Built-In Resistor		PD379
37	5254R10	3.0m†		24		T-1 3/4	10	20m		35m	565n		Built-In Resistor		PD379
38	MT860-5VG	3.0m	5.0m	50	Transparent		20	5.0m	70m	7.5m	565n	27	w/resistor for 5V	A	PD1162
39	HLMP5050	3.0m	10m	75	Diffused		3.0	10m	135m	30m	565n	2A			PD67c
40	NSC556G3	3.0m	10m	30	Diffused		2.8	10m	115m	40m	565n	5A		A	PD18c Ø
41	SG215D	3.0m	10m		Diffused		2.5	10m	100m	40m	565n	4A%		A	PD257g
42	CQX11IV	3.0m	10m	40		Arch	3.0	10m	120m	30m	560n	XA§		A	PD431
43	LN0204GP3	3m†	10m		Diffused	Rectangular	2.2	20m	60m	20m	565n	28		A	PD1070
44	CQS95E4	3.0m	10m	50	Diffused	T-1	2.8	20m	90m%	40m	565n	A §		A	PD1171 Ø
45	CQS95L4	3.0m	10m	50	Diffused	T-1	2.8	20m	90m%	30m	565n	A §		A	PD1172 Ø
46	CQW95	3.0m	10m	60	Transparent	T-1	3.0	10m	150m	60m	565n	A §		A	PD77 Ø
47	CQX64D(A)	3.0m	10m	30	Diffused	T-1	3.0	10m	180m%	60m	565n	A §		A	PD232j Ø
48	CQY94B4(A)	3.0m	10m	70	Diffused	T-1	3.0	10m	180m%	60m	565n	A §		A	PD232j Ø
49	CQY94BL4	3.0m	10m	70	Diffused	T-1	3.0	10m	180m%	60m	565n	A §		A	PD232k Ø
50	CQY95B4(A)	3.0m	10m	70	Transparent	T-1	3.0	10m	150m	60m	565n	A §		A	PD77 Ø
51	CQS84L4	3.0m	10m	70	Diffused	T-1 1/2	2.6	10m	180m%	60m	565n	A §		A	PD15e Ø
52	SG213D(A)	3.0m	10m		Diffused	T-1 1/2	2.6	10m	100m	40m	565n	4A%		A	PD280c
53	LTL4233	3.0m	10m	36	Diffused	T-1 3/4	2.8	20m	100m	30m	565n	5A		♦	PD1211
54	AND115G	3.0m	15m	45	Jewel		2.8	20m	100m	25m	565n	57		A	PD215a Ø
55	MT130G	3.0m	15m	50	Transparent		2.8	20m	100m	25m	565n	27		A	PD1162
56	MT130HLG	3.0m	15m	50	Transparent		2.8	20m	70m	25m	565n	27	Wire-Wrap Leads		PD258b
57	MT130SLG	3.0m	15m	50	Transparent		2.8	20m	100m	25m	565n	27			PD258c
58	TLG115	3.0m†	15m		Jewel		2.8	20m	100m	25m	565n	27		A	PD215a Ø
59	AND113G	3.0m	15m	50	Jewel	T-1 3/4	2.8	20m	100m	25m	565n	57		A	PD215 Ø
60	TLG113A	3.0m	15m	50	Water-clear	T-1 3/4	2.8	20m	100m	25m	565n	27		A	PD422a Ø
61	HLMP0504	3.0m	20m		Diffused		3.0	20m	120m	30m	565n	5A			PD423A
62	L39UR-G2-2112	3.0m†	20m		Fresnel		3.0	20m	120m	30m	562n	5A			PD398b
63	L39UR-G2-2312	3.0m†	20m		Fresnel		3.0	20m	120m	30m	562n	5A			PD398c
64	L39UR-G6-2112	3.0m†	20m		Fresnel		7.0	20m	120m	30m	562n	5A			PD398b
65	L39UR-G6-2312	3.0m†	20m		Fresnel		7.0	20m	120m	30m	562n	5A			PD398c
66	L39UR-G12-2112	3.0m†	20m		Fresnel		14	20m	120m	30m	562n	5A			PD398b
67	L39UR-G12-2312	3.0m†	20m		Fresnel		14	20m	120m	30m	562n	5A			PD398c
68	L39UR-G24-2112	3.0m†	20m		Fresnel		26	20m	120m	30m	562n	5A			PD398b
69	L39UR-G24-2312	3.0m†	20m		Fresnel		26	20m	120m	30m	562n	5A			PD398c
70	L41EN-G2-2112	3.0m	20m		Diffused		3.0	20m	120m	30m	562n	5A			PD398f
71	L41EN-G6-2112	3.0m	20m		Diffused		7.0	20m	120m	30m	562n	5A			PD398f
72	L41EN-G12-2112	3.0m	20m		Diffused		14	20m	120m	30m	562n	5A			PD398f
73	L41EN-G24-2112	3.0m	20m		Diffused		26	20m	120m	30m	562n	5A			PD398f
74	L111DG	3.0m	20m	60	Diffused		3.0	20m	120m	30m	562n	5A		A	PD50t
75	L611DG	3.0m	20m	75			3.0	20m	120m	30m	562n	5A	Stackable		PD1056a
76	L612DG	3.0m	20m	60	Diffused		3.0	20m	120m	30m	562n	5A	Stackable		PD1060
77	L615DG	3.0m	20m	60	Diffused		3.0	20m	120m	30m	562n	5A	Stackable		PD1057a
78	LM611DG	3.0m	20m	60	Diffused		3.0	20m	120m	30m	562n	5A	Stackable		PD1056a
79	LN33SCP(H)	3m†	20m		Water-clear		2.2	20m	90m	30m	565n	28		A	PD1062
80	LST5254R	3.0m†	20m	24	Diffused		3.0 §	20m	120m	35m	565n	5A	Built-In Resistor		PD50r Ø
81	MGB52W	3.0m	20m		Diffused		3.0	20m			565n				PD50n
82	SEL2410G	3.0m	20m	100	Diffused		2.5	10m	90m	30m	560n	3A		A	PD322 Ø
83	SG204D	3.0m†	20m	40	Diffused		2.5	20m	100m	50m	565n	X8§		A	PD12t Ø
84	561-2201-050	3.0m	20m	75	Diffused	Panel-mount	3.0	20m	120m	30m	562n	5A			PD1017
85	561-2201-060	3.0m	20m	75	Diffused	Panel-mount	3.0	20m	120m	30m	562n	5A			PD1017a
86	561-2201-070	3.0m	20m	75	Diffused	Panel-mount	3.0	20m	120m	30m	562n	5A			PD1017b
87	561-2201-080	3.0m	20m	75	Diffused	Panel-mount	3.0	20m	120m	30m	562n	5A			PD1017c
88	561-2201-090	3.0m	20m	75	Diffused	Panel-mount	3.0	20m	120m	30m	562n	5A			PD1017d
89	561-2201-100	3.0m	20m	75	Diffused	Panel-mount	3.0	20m	120m	30m	562n	5A			PD1017e
90	LN142WP38	3m†	20m			Rectangular	2.2	20m	90m	30m	565n	28		AQ	PD1065
91	TLPG164	3.0m†	20m		Diffused	T-1	2.8	20m	70m	25m	555n	27		A	PD1203 Ø
92	HLMP3502	3.0m	20m	75		T-1 3/4	3.0	20m	120m	30m	565n	5A		B	PD50u
93	HLMP3553	3.0m	20m	50		T-1 3/4	3.0	20m	120m	30m	565n	5A		B	PD392
94	MG52W	3.0m	20m		Diffused	T-1 3/4	3.0	20m			565n				PD258a
95	MV5254	3.0m†	20m	24	Diffused	T-1 3/4	3.0	20m	105m	35m	565n	5A		A	PD16n Ø
96	MV64530	3.0m	20m	75		T-1 3/4	3.0	20m	120m	30m	562n	5A			PD16a
97	549-0201	3.2m†	20m	70	Diffused	T-1 3/4	3.0	20m	120m	40m	565n	4A		A	PD379 Ø
98	CQV61III	3.5m⊠	10m	110	Diffused		3.0	10m	90m	30m	560n	5A		A	PD227
99	LTL5234	3.5m	10m	44	Transparent		2.8	20m	100m	30m	565n	5A		♦	PD1361
100	CQV61A-III(A)	3.5m	10m	110		Rectangular	3.0	10m	180m	60m	565n	5A%			PD1082
101	CQV61AL-III(A)	3.5m	10m	110		Rectangular	3.0	10m	180m	60m	565n	5A%			PD1084
102	LA10021	3.8m	20m		Diffused		2.0	10m			567n			A	PD1275
103	HLMP1585	4.0m	10m	60	Diffused	T-1	3.0	10m	135m	30m	565n	2A		B	PD77m
104	TLHG4200	4.0m	10m	22	Transparent	T-1	3.0	20m	100m	30m	565n	5A%	High-efficiency		PD1190
105	L291DG	4.0m	20m	60	Diffused		2.5	10m	75m	35m	555n	38			PD1297
106	LN38GPL	4m†	20m		Diffused		2.2	20m	90m	30m	565n	28		A	PD1062a
107	SG205T(2)	4.0m†	20m	16			2.5	20m	100m	40m	565n	X8§		A	PD285 Ø
108	TLPG154	4.m	20m	30	Diffused		2.8	20m	70m	25m	555n	27		♦	PD1105 Ø
109	MV54123	4.0m	20m	100		Rectangular	3.0	20m	120m	30m	585n	5A			PD262h
110	ESBG3431	4.0m	20m		Diffused	T-1	2.5	20m	125m	50m	555n	38		A	PD33

SYMBOLS AND CODES EXPLAINED IN INTERPRETER

2. LED LAMPS - Green (Cont'd)

IN ORDER OF COLOR AND: (1) INTENSITY (2) IF TEST (3) BEAM ANGLE & (4) TYPE No.

LINE No.	4 TYPE NUMBER	1 LUMINOUS INTENSITY MIN (cd)	2 IF TEST (A)	3 BEAM ANGLE θ HI (°)	LENS TYPE	LAMP STYLE	VF MAX (V)	IF TEST (A)	PD RATED MAX (W)	IF RATED MAX (A)	PEAK WAVE-LENGTH λP (m)	TEMP. RANGE CODE - +	FEATURES	LEAD CODE	OUTLINE DRAWING
1	MT550G	4.0m	20m	50	Transparent	T-1 3/4	5.4	20m	160m	30m	565n	27	2Chip	♦	PD1211
2	SBG5633	4.0m	20m		Diffused	T-1 3/4	2.5	20m	125m	50m	555n	38		A	PD47b
3	HLMP-M550	4.2m	10m	80	Transparent		3.0	10m	135m	30m	565n	2A			PD1342
4	HLMP-D601	4.2m	10m		Diffused	T-1 1/2	3.0	10m	135m	30m	555n	2A			PD940a
5	HLMP-M500	4.2m	20m	135	Diffused		3.0	10m	135m	30m	565n	2A			PD1342
6	CMD54173	4.5m	20m		Diffused		2.5	20m	200m	35m	562n	48			PD473
7	MV54173	4.5m	20m				3.0	20m	200m	1.0	562n	48			PD473
8	LN347GP	4.5m†	20m		Diffused	T-3/4	2.2	20m	90m	30m	565n	28		A	PD914a
9	OP004-160	4.5m†	40m		Diffused		2.6	40m	225m	80m					None
10	ORL16	4.5m†	40m		Diffused		2.6	40m	225m	80m					None
11	E1300	5.0m					2.6	20m		35m	565n			A	PD16f Ø
12	SG203TA	5.0m	10m		Transparent		2.5	10m	100m	40m	565n	4A%		A	PD1239b
13	CQS95E5	5.0m	10m	50	Diffused	T-1	2.8	20m	90m	40m	565n	A §		A	PD1171 Ø
14	CQS95L5	5.0m	10m	50	Diffused	T-1	2.8	20m	90m%	30m	565n	A §		A	PD1172 Ø
15	CQW95-5	5.0m	10m	60	Transparent	T-1	3.0	10m	150m	60m	565n	A §		A	PD77 Ø
16	CQX64D5(A)	5.0m	10m	30	Diffused	T-1	3.0	10m	180m%	60m	565n	A §		A	PD232j Ø
17	CQY94B5(A)	5.0m	10m	70	Diffused	T-1	3.0	10m	180m%	60m	565n	A §		A	PD232j Ø
18	CQY94BL5	5.0m	10m	70	Diffused	T-1	3.0	10m	180m%	60m	565n	A §		A	PD232k Ø
19	CQY95B5(A)	5.0m	10m	70	Transparent	T-1	3.0	10m	150m	60m	565n	A §		A	PD77 Ø
20	LTL4232	5.0m	10m	20	Transparent	T-1	2.8	20m	100m	30m	565n	5A		♦	PD1212
21	CQS84L5	5.0m	10m	70	Diffused	T-1 1/2	2.6	10m	180m%	60m	565n	A §		A	PD15e Ø
22	SG203TA(3)	5m	10m			T-1 1/2	2.6	10m		40m	565n	4A%		A	PD280j
23	LTL10234	5.0m	10m	34	Transparent	T-1 3/4	2.8	20m	100m	30m	565n	5A		A	PD1210b
24	TLG144	5.m	15m	36	Diffused		2.8	20m	70m	25m	565n	27		♦	PD1101a Ø
25	MT440G	5.0m	15m	30	Diffused	T-1 3/4	2.8	20m	70m	25m	565n	27		♦	PD1199
26	L32R-G2-2112	5.0m	20m	28	Diffused		2.5	20m	75m	35m	555n	38			PD398g
27	L32R-G2-2112T	5.0m	20m		Diffused		2.5	20m	75m	35m	555n	38			PD1324
28	L32R-G2-2312	5.0m	20m	28	Diffused		2.5	20m	75m	35m	555n	38			PD398h
29	L32R-G2-2312T	5.0m	20m		Diffused		2.5	20m	75m	35m	555n	38			PD1324a
30	L32R-G6-2112	5.0m	20m	28	Diffused		7.0	20m	75m	35m	555n	38			PD398g
31	L32R-G6-2112T	5.0m	20m		Diffused		7.0	20m	75m	35m	555n	38			PD1324
32	L32R-G6-2312	5.0m	20m	28	Diffused		7.0	20m	75m	35m	555n	38			PD398h
33	L32R-G6-2312T	5.0m	20m		Diffused		7.0	20m	75m	35m	555n	38			PD1324a
34	L32R-G12-2112T	5.0m	20m		Diffused		14	20m	75m	35m	555n	38			PD1324
35	L32R-G12-2312T	5.0m	20m		Diffused		14	20m	75m	35m	555n	38			PD1324a
36	L32R-G24-2112T	5.0m	20m		Diffused		26	20m	75m	35m	555n	38			PD1324
37	L32R-G24-2312T	5.0m	20m		Diffused		26	20m	75m	35m	555n	38			PD1324a
38	L121DG	5.0m	20m	60	Diffused		2.5	20m	75m	35m	555n	38		A	PD50n
39	L621DG	5.0m	20m	60	Diffused		2.5	20m	75m	35m	555n	38	Stackable		PD1056a
40	L622DG	5.0m	20m	60	Diffused		2.5	20m	75m	35m	555n	38	Stackable		PD1060
41	L625DG	5.0m	20m	60	Diffused		2.5	20m	75m	35m	555n	38	Stackable		PD1057a
42	MGB52C	5.0m	20m		Transparent		3.0	20m			565n				PD50n
43	SEL2410E	5.0m	20m	40	Water-clear		2.5	10m	90m	30m	560n	3A		A	PD322 Ø
44	SLP280F50U	5.0m†	20m		Diffused		2.1	20m	70m	25m	565n	28		A	PD1293j
45	TLG164	5.m	20m	26	Diffused		2.8	20m	70m	25m	565n	27		♦	PD478 Ø
46	MT640G	5m	20m	20	Diffused	T-1	2.8	20m	70m	25m	565n	27		♦	PD1203
47	MV54643	5.0m	20m	90		T-1	3.0	20m	120m	30m	562n	5A		B	PD77m
48	GL5NG6	5.0m	20m			T-1 3/4	2.8	20m	85m	30m	565n	28		A	PD280a Ø
49	LN31GCP.HL	5.0m	20m		Water-clear	T-1 3/4	2.8	20m	90m	30m	560n	3A%		A	PD280b
50	MG52C	5.0m	20m		Transparent	T-1 3/4	3.0	20m			565n				PD258a
51	SBG5531	5.0m	20m		Diffused	T-1 3/4	2.5	20m	125m	50m	555n	38		A	PD28b
52	6340-005-505G	5.0m	40m	130			2.0	40m					Lug		PD227 Ø
53	6340-305-505G	5.0m	40m	130			2.0	40m					Wire		PD227 Ø
54	6342-005-505G	5.0m	40m	130			5.0	40m					Lug		PD227 Ø
55	6342-305-505G	5.0m	40m	130			5.0	40m					Wire		PD227 Ø
56	TLG253	5.5m	15m		Diffused		2.8	20m	70m	30m	565n	27		A	None
57	SG215T	6.0m	10m				2.5	10m	100m	40m	565n	4A%		A	PD257g
58	LTL6233L	6.0m†	10m		Diffused	Arch	2.8	20m			565n			A	PD1225
59	LTL5134	6.0m	10m	40	Transparent	T-1 3/4	2.8	20m	100m	30m	565n	5A		♦	PD1211
60	NSC554G6	6.0m	10m	24	Transparent	T-1 3/4	2.8	10m	115m	40m	565n	5A		A	PD18c Ø
61	GL3NG5	6.0m	20m				2.8	20m	85m	30m	565n	28			None
62	HLMP1520	6m	20m	45			3.0	20m	135m	30m	565n	5A			PD77g
63	HLMP1521	6m	20m	45			3.0	20m	135m	30m	565n	5A			PD77g
64	L59CG2T	6.0m†	20m	30	Water-clear		3.0	20m	120m	30m	562n	5A		B	PD1310
65	L59CG2W	6.0m†	20m	30	Water-clear		3.0	20m	120m	30m	562n	5A		A	PD1309a
66	L59CG6T	6.0m†	20m	30	Water-clear		7.0	20m	120m	30m	562n	5A		B	PD1310
67	L59CG6W	6.0m†	20m	30	Water-clear		7.0	20m	120m	30m	562n	5A		A	PD1309a
68	L59CG12T	6.0m†	20m	30	Water-clear		14	20m	120m	30m	562n	5A		B	PD1310
69	L59CG12W	6.0m†	20m	30	Water-clear		14	20m	120m	30m	562n	5A		A	PD1309a
70	L59CG24W	6.0m†	20m	30	Water-clear		26	20m	120m	30m	562n	5A		A	PD1309a
71	L59DG2T	6.0m†	20m	60	Diffused		3.0	20m	120m	30m	562n	5A		B	PD1310
72	L59DG2W	6.0m†	20m	60	Diffused		3.0	20m	120m	30m	562n	5A		A	PD1309a
73	L59DG6T	6.0m†	20m	60	Diffused		7.0	20m	120m	30m	562n	5A		B	PD1310
74	L59DG6W	6.0m†	20m	60	Diffused		7.0	20m	120m	30m	562n	5A		A	PD1309a
75	L59DG12T	6.0m†	20m	60	Diffused		14	20m	120m	30m	562n	5A		B	PD1310
76	L59DG12W	6.0m†	20m	60	Diffused		14	20m	120m	30m	562n	5A		A	PD1309a
77	L59DG24T	6.0m†	20m	60	Diffused		26	20m	120m	30m	562n	5A		B	PD1310
78	L59DG24W	6.0m†	20m	60	Diffused		26	20m	120m	30m	562n	5A		A	PD1309a
79	MGB52T	6.0m	20m		Transparent		3.0	20m			565n				PD50n
80	HLMP1523	6.0m	20m	60	Diffused	T-1	3.0	20m	135m	30m	565n	5A		B	PD77m
81	LDG1152	6.0m	20m	70	Diffused	T-1	3.0	20m	200m	60m	560n	5A%	Tr/Tf 50ns Typ	B	PD16al Ø
82	TLPG163	6.0m†	20m		Transparent	T-1	2.8	20m	70m	25m	555n	27		A	PD1203 Ø
83	CMD54644	6.0m	20m	90	Diffused	T-1 1/2	3.0	20m	120m	30m	562n	5A		B	PD1150
84	LDG5072	6.0m	20m	70	Diffused	T-1 3/4	3.0	20m	200m	60m	560n	5A%	Tr/Tf 50ns Typ	B	PD16ak Ø
85	LDG5172	6.0m	20m	70	Diffused	T-1 3/4	3.0	20m	200m	60m	560n	5A%	Tr/Tf 50ns Typ	B	PD16ak Ø
86	MG52T	6.0m	20m		Transparent	T-1 3/4	3.0	20m			565n				PD258a
87	TLHG4100	6.3m	10m	22	Water-clear	T-1	3.0	20m	100m	50m	565n	5A%	For DC/Pulse Op		PD1190
88	TLHG5200	6.3m	10m	14	Transparent	T-1 3/4	3.0	20m	100m	30m	565n	5A%	High-efficiency	A	PD280k
89	HLMP-M551	6.7m	10m	80	Transparent		3.0	10m	135m	30m	565n	2A			PD1342
90	HLMP3517	6.7m	10m	24		T-1 1/2	3.0	10m	135m	30m	565n	2A			PD940a
91	HLMP-M501	6.7m	20m	135	Diffused		3.0	10m	135m	30m	565n	2A			PD1342
92	MT221G	7.0m†	15m		Transparent	Rectangular	2.8	20m	70m	25m	565n	27			PD1356
93	HLMP3507	7.0m	20m	75	Diffused		3.0	20m	120m	30m	565n	5A		B	PD16f
94	SPG3431	7.0m	20m		Diffused	T-1	2.5	20m	125m	50m	565n	38		A	PD33
95	CMD54531	7.0m	20m	65	Diffused	T-1 3/4	3.0	20m	105m	35m	565n	5A		A	PD16ao Ø
96	MV64531	7.0m	20m	75		T-1 3/4	3.0	20m	120m	30m	562n	5A			PD16a
97	HLMP3962	8.0m	10m	75	Diffused	T-1 1/2	3.0	10m	135m	30m	565n	2A			PD940a
98	TLPG144	8.0m†	15m		Diffused	T-1 3/4	2.8	20m	70m	25m	555n	27		A	PD1199 Ø
99	550-5204	8.0m	20m	50	Diffused		2.5	20m	125m	50m	555n	38			PD66a
100	550-5205	8.0m	20m	50	Diffused		2.5	20m	125m	50m	555n	38			PD67a
101	L58D-G2W	8.0m†	20m	60	Diffused		4.0	20m	75m	35m	555n	38		A	PD400a
102	L58D-G6W	8.0m†	20m	60	Diffused		4.0	20m	75m	35m	555n	38		A	PD400a
103	L58D-G12W	8.0m†	20m	60	Diffused		4.0	20m	75m	35m	555n	38		A	PD400a
104	L58D-G24W	8.0m†	20m	60	Diffused		4.0	20m	75m	35m	555n	38		A	PD400a
105	L59UC-G2W	8.0m†	20m	30	Water-clear		3.0	20m	75m	35m	555n	5A		A	PD1309
106	L59UC-G6W	8.0m†	20m	30	Water-clear		7.0	20m	75m	35m	555n	5A		A	PD1309
107	L59UC-G12W	8.0m†	20m	30	Water-clear		14	20m	75m	35m	555n	5A		A	PD1309
108	L59UC-G24W	8.0m†	20m	30	Water-clear		26	20m	75m	35m	555n	5A		A	PD1309
109	L59UD-G2W	8.0m†	20m	60	Diffused		2.5	20m	75m	35m	555n	5A		A	PD1309
110	L59UD-G6W	8.0m†	20m	60	Diffused		7.0	20m	75m	35m	555n	5A		A	PD1309

SYMBOLS AND CODES EXPLAINED IN INTERPRETER

2. LED LAMPS - Green (Cont'd)

IN ORDER OF COLOR AND: (1) INTENSITY (2) IF TEST (3) BEAM ANGLE & (4) TYPE No.

LINE No.	4 TYPE NUMBER	1 LUMINOUS INTENSITY MIN (cd)	2 IF TEST (A)	3 BEAM ANGLE θ HI (°)	LENS TYPE	LAMP STYLE	VF MAX (V)	IF TEST (A)	PD RATED MAX (W)	IF RATED MAX (A)	PEAK WAVE-LENGTH λP (m)	TEMP. RANGE CODE - +	FEATURES	LEAD CODE	OUTLINE DRAWING
1	L59UD-G12W	8.0m†	20m	60	Diffused		14	20m	75m	35m	555n	5A		A	PD1309
2	L59UD-G24W	8.0m†	20m	60	Diffused		26	20m	75m	35m	555n	5A		A	PD1309
3	L131DG	8.0m	20m	75	Diffused		2.5	20m	100m	50m	555n	38		A	PD50n
4	L631DG	8.0m	20m	75	Diffused		2.5	20m	100m	50m	555n	38	Stackable		PD1056a
5	L632DG	8.0m	20m	75	Diffused		2.5	20m	100m	50m	555n	38	Stackable		PD1060
6	L635DG	8.0m	20m	75	Diffused		2.5	20m	100m	50m	555n	38	Stackable		PD1057a
7	559-5201-001	8.0m	20m	50	Diffused	Panel-mount	2.5	20m	125m	50m	555n	38			PD991
8	559-5201-003	8.0m	20m	50	Diffused	Panel-mount	2.5	20m	125m	50m	555n	38			PD991a
9	559-5201-004	8.0m	20m	50	Diffused	Panel-mount	2.5	20m	125m	50m	555n	38			PD991b
10	559-5201-005	8.0m	20m	50	Diffused	Panel-mount	2.5	20m	125m	50m	555n	38			PD991c
11	559-5201-006	8.0m	20m	50	Diffused	Panel-mount	2.5	20m	125m	50m	555n	38			PD991d
12	559-5201-007	8.0m	20m	50	Diffused	Panel-mount	2.5	20m	125m	50m	555n	38			PD991e
13	561-5201-050	8.0m	20m	50	Diffused	Panel-mount	2.5	20m	125m	50m	555n	38			PD1017
14	561-5201-060	8.0m	20m	50	Diffused	Panel-mount	2.5	20m	125m	50m	555n	38			PD1017a
15	561-5201-070	8.0m	20m	50	Diffused	Panel-mount	2.5	20m	125m	50m	555n	38			PD1017b
16	561-5201-080	8.0m	20m	50	Diffused	Panel-mount	2.5	20m	125m	50m	555n	38			PD1017c
17	561-5201-090	8.0m	20m	50	Diffused	Panel-mount	2.5	20m	125m	50m	555n	38			PD1017d
18	561-5201-100	8.0m	20m	50	Diffused	Panel-mount	2.5	20m	125m	50m	555n	38			PD1017e
19	L58D-G2T	8.0m†	20m	60	Diffused	Panel-mount	4.0	20m	75m	35m	555n	38		A	PD400
20	550-5206	8.0m	20m	50	Diffused	Side-mount	2.5	20m	125m	50m	555n	38			PD68a
21	ESBG5531	8.0m	20m		Diffused	T-1 3/4	2.5	20m	125m	50m	555n	38		A	PD28b
22	ESBG5633	8.0m	20m		Diffused	T-1 3/4	2.5	20m	125m	50m	555n	38		A	PD47b
23	HLMP3567	8.0m	20m	40	Diffused	T-1 3/4	3.0	20m	120m	30m	565n	5A		B	PD392
24	MT540G	8.0m	20m	20	Diffused	T-1 3/4	2.8	20m	70m	25m	565n	27		♦	PD1202
25	560-0201	9.0mØ	30m	65	Diffused	T-1 3/4	§	35m			565n	57			PD479
26	560-0202	9.0mØ	30m	65	Diffused	T-1 3/4	4.3	25m	108m		565n	57			PD479
27	560-0203	9.0mØ	30m	65	Diffused	T-1 3/4	6.0	25m	150m		565n	57			PD479
28	560-0204	9.0mØ	30m	65	Diffused	T-1 3/4	7.2	25m	180m		565n	57			PD479
29	560-0205	9.0mØ	30m	65	Diffused	T-1 3/4	12	20m	240m		565n	57			PD479
30	560-0206	9.0mØ	30m	65	Diffused	T-1 3/4	14	21m	302m		565n	57			PD479
31	560-0207	9.0mØ	30m	65	Diffused	T-1 3/4	17	20m	336m		565n	57			PD479
32	560-0208	9.0mØ	30m	65	Diffused	T-1 3/4	24	16m	461m		565n	57			PD479
33	CQW95-6	10m	10m	60	Transparent	T-1	3.0	10m	150m	60m	565n	A §		A	PD77 Ø
34	CQX64	10m	10m	20	Water-clear	T-1	3.0	10m	180m%	60m	565n	A §		A	PD232j Ø
35	CQX64L(A)	10m	10m	20	Water-clear	T-1	3.0	10m	180m%	60m	565n	A §		A	PD232k Ø
36	TLHG4101	10m	10m	22	Water-clear	T-1	3.0	20m	100m	50m	565n	5A%	For DC/Pulse Op		PD1190
37	TLHG4102	10m	10m	22	Water-clear	T-1	3.0	20m	100m	50m	565n	5A%	For DC/Pulse Op		PD1190
38	HLMP3519	10m	10m	24		T-1 1/2	3.0	10m	135m	30m	565n	2A			PD940a
39	LG5411LO(A)	10m	10m	20	Transparent	T-1 3/4	3.0	10m	150m	45m	560n	5A%	Super Bright	A ♦	PD16ah Ø
40	LTL4234	10m	10m	16	Transparent	T-1 3/4	2.8	20m	100m	30m	565n	5A		♦	PD1211
41	TLHG5100	10m	10m	12	Water-clear	T-1 3/4	3.0	20m	100m	30m	565n	XA§	High Efficiency	A	PD1025
42	MT430G	10m	15m	20	Transparent	T-1 3/4	2.8	20m	70m	25m	565n	27		♦	PD1199
43	MT440UG	10m	15m	30	Diffused	T-1 3/4	2.8	20m	55m	25m	565n	27		♦	PD1199
44	TLG132	10m	15m	17	Water-clear	T-1 3/4	2.8	20m	70m	25m	565n	27		A	PD422 Ø
45	BG3668S	10m	20m		Transparent		2.5	20m	125m	50m	555n	38	Lens:Pale Green		PD1396 Ø
46	LN01301C	10m†	20m		Water-clear		2.2	20m	60m	20m	565n	28		A	PD1069
47	TLPG153	10m	20m	9	Transparent		2.8	20m	70m	25m	555n	27		♦	PD1105 Ø
48	LDG1153	10m	20m	70	Diffused	T-1	3.0	20m	200m	60m	560n	5A%	Tr/Tf 50ns Typ	B	PD16al Ø
49	MT630G	10m	20m	10	Transparent	T-1	2.8	20m	70m	25m	565n	27		♦	PD1203
50	MT640UG	10m	20m	20	Diffused	T-1	2.8	20m	70m	25m	565n	27		♦	PD1203
51	MV54644	10m	20m	90		T-1	3.0	20m	120m	30m	562n	5A		B	PD77m
52	HLMP3554	10m	20m	50	Diffused	T-1 3/4	3.0	20m	120m	30m	565n	5A		B	PD392
53	LG5411NO(A)	10m	25m	20	Transparent	T-1 3/4	3.0	10m	150m	45m	560n	5A%	Super Bright	A ♦	PD16ah Ø
54	SG213T(A)	12m	10m		Water-clear	T-1 1/2	2.6	10m	100m	40m	565n	4A%		A	PD280c
55	561-2501-050	12m	20m	35		Panel-mount	3.0	20m	120m	30m	562n	5A			PD1017e
56	561-2501-060	12m	20m	35		Panel-mount	3.0	20m	120m	30m	562n	5A			PD1017a
57	561-2501-070	12m	20m	35		Panel-mount	3.0	20m	120m	30m	562n	5A			PD1017b
58	561-2501-080	12m	20m	35		Panel-mount	3.0	20m	120m	30m	562n	5A			PD1017c
59	561-2501-090	12m	20m	35		Panel-mount	3.0	20m	120m	30m	562n	5A			PD1017d
60	561-2501-100	12m	20m	35		Panel-mount	3.0	20m	120m	30m	562n	5A			PD1017e
61	521-9251	12m	20m	35		T-1 1/2	3.0	20m	120m	30m	565n	5A		A	PD62c Ø
62	MV64520	12m	20m	35		T-1 3/4	3.0	20m	120m	30m	562n	5A			PD16a
63	SPG5531	12m	20m		Diffused	T-1 3/4	2.5	20m	125m	50m	565n	38		A	PD28b
64	SPG5633	12m	20m		Diffused	T-1 3/4	2.5	20m	125m	50m	565n	38		A	PD47b
65	5252R5	15m†		28		T-1 3/4	5.0	20m		35m	565n		Built-In Resistor		PD379
66	5252R10	15m†		28		T-1 3/4	10	20m		35m	565n		Built-In Resistor		PD379
67	NSC554G15	15m	10m	24	Transparent	T-1 3/4	2.8	10m	115m	40m	565n	5A		A	PD18c Ø
68	TLG145	15m†	15m		Jewel		2.8	20m	70m	25m	565n	27		A	PD1200 Ø
69	LST5252R	15m†	20m	28	Water-clear		3.0 §	20m	120m	35m	565n	5A	Built-In Resistor		PD50r Ø
70	MV5252	15m†	20m	28	Transparent	T-1 3/4	3.0	20m	105m	35m	565n	5A		A	PD16a Ø
71	SEL1410E	15m	20m	40	Water-clear	T-1 3/4	2.5	10m	90m	30m	560n	3A		A	PD16n Ø
72	SEL1410G	15m	20m	100	Diffused	T-1 3/4	2.5	10m	90m	300m	560n	3A		A	PD16n Ø
73	CQW95-7	16m	10m	60	Transparent	T-1	3.0	10m	150m	60m	565n	A §		A	PD77 Ø
74	CQX64-7	16m	10m	20	Water-clear	T-1	3.0	10m	180m%	60m	565n	A §		A	PD232j Ø
75	CQX64D7(A)	16m	10m	30	Diffused	T-1	3.0	10m	180m%	60m	565n	A §		A	PD232j Ø
76	CQX64L7(A)	16m	10m	20	Water-clear	T-1	3.0	10m	180m%	60m	565n	A §		A	PD232k Ø
77	TLHG4103	16m	10m	22	Water-clear	T-1	3.0	20m	100m	50m	565n	5A%	For DC/Pulse Op		PD1190
78	TLHG4105	16m	10m	22	Water-clear	T-1	3.0	20m	100m	50m	565n	5A%	For DC/Pulse Op		PD1190
79	TLHG5101	16m	10m	12	Water-clear	T-1 3/4	3.0	20m	100m	30m	565n	XA§	High Efficiency	A	PD1025
80	TLHG5102	16m	10m	12	Water-clear	T-1 3/4	3.0	20m	100m	30m	565n	XA§	High Efficiency	A	PD1025
81	L58C-G2W	16m†	20m	30	Water-clear		4.0	20m	75m	35m	555n	38		A	PD400a
82	L58C-G6W	16m†	20m	30	Water-clear		4.0	20m	75m	35m	555n	38		A	PD400a
83	L58C-G12W	16m†	20m	30	Water-clear		4.0	20m	75m	35m	555n	38		A	PD400a
84	L58C-G24W	16m†	20m	30	Water-clear		4.0	20m	75m	35m	555n	38		A	PD400a
85	L58C-G2T	16m†	20m	30	Water-clear	Panel-mount	4.0	20m	75m	35m	555n	38		A	PD400
86	ESBG3401	16m	20m		Water-clear	T-1	2.5	20m	125m	50m	555n	38		A	PD33
87	ESBG5603	16m	20m		Water-clear	T-1 3/4	2.5	20m	125m	50m	555n	38		A	PD47b
88	4030-4SERIES	20m†	10m				2.2	10m		20m		5A	Built-In Resistor		PD1039b
89	4030-5SERIES	20m†	10m				2.2	10m		20m		5A	Built-In Resistor		PD1039b
90	4130-4SERIES	20m†	10m			Panel-mount	2.2	10m		20m		5A	Built-In Resistor		PD1039a
91	4130-5SERIES	20m†	10m			Panel-mount	2.2	10m		20m		5A	Built-In Resistor		PD1039a
92	SLP238C50	20m†	20m		Transparent		2.1	20m	70m	25m	565n	28		A	PD1293d
93	SLP270C	20m†	20m		Transparent		2.1	20m	70m	25m	565n	28		A	PD1293p
94	TLG153	20m	20m	8	Transparent		2.8	20m	70m	25m	565n	27		♦	PD1105 Ø
95	HLMP0563	20m	20m	18	Water-clear	Herm. Can	3.0	25m	120m	35m	565n	6A	Herm	B	PD84
96	HLMP0591	20m	20m	18	Water-clear	Herm. Can	3.0	25m	120m	35m	565n	6A	Herm	B	PD84
97	HLMP0592	20m	20m	18	Water-clear	Herm. Can	3.0	25m	120m	35m	565n	6A	Herm	B	PD84
98	HLMP0564	20m	20m	18	Water-clear	Panel-mount	3.0	25m	120m	35m	565n	6A	Herm	B	PD369
99	HLMP0565	20m	20m	18	Water-clear	Panel-mount	3.0	25m	120m	35m	565n	6A	Herm	B	PD369
100	HLMP0566	20m	20m	18	Water-clear	Panel-mount	3.0	25m	120m	35m	565n	6A	Herm	B	PD369
101	MT630UG	20m	20m	10	Transparent	T-1	2.8	20m	70m	25m	565n	27		♦	PD1203
102	TLG163	20m†	20m		Transparent	T-1	2.8	20m	70m	25m	565n	27		A	PD1203 Ø
103	TLUG164	20m†	20m		Diffused	T-1	2.8	20m	70m	25m	565n	27		A	PD1203 Ø
104	MT530G	20m	20m	10	Transparent	T-1 3/4	2.8	20m	70m	25m	565n	27		♦	PD1202
105	CQX64D6(A)	22m	10m	30	Diffused	T-1	3.0	10m	180m%	60m	565n	A §		A	PD232j Ø
106	NSC554G24	24m	10m	24	Transparent	T-1 3/4	2.8	10m	115m	40m	565n	5A		A	PD18c Ø
107	NSL7230	24m	20m	45	Water-clear		2.5	20m	120m	35m	565n	5A		B	PD545 Ø
108	HLMP1540	24m	20m	45	Water-clear	T-1	3.0	20m	135m	25m	565n	2A		B	PD77m
109	560-0501	24m	30m	28		T-1 3/4	§	35m			635n	57			PD479
110	TLHG5103	25m	10m	12	Water-clear	T-1 3/4	3.0	20m	100m	30m	565n	XA§	High Efficiency	A	PD1025

SYMBOLS AND CODES EXPLAINED IN INTERPRETER

2. LED LAMPS - Green (Cont'd)

IN ORDER OF COLOR AND: (1) INTENSITY (2) IF TEST (3) BEAM ANGLE & (4) TYPE No.

LINE No.	4 TYPE NUMBER	1 LUMINOUS INTENSITY MIN (cd)	2 IF TEST (A)	3 BEAM ANGLE θ HI (°)	LENS TYPE	LAMP STYLE	VF MAX (V)	IF TEST (A)	PD RATED MAX (W)	IF RATED MAX (A)	PEAK WAVE-LENGTH λP (m)	TEMP. RANGE CODE - +	FEATURES	LEAD CODE	OUTLINE DRAWING
1	TLHG5105	25m	10m	12	Water-clear	T-1 3/4	3.0	20m	100m	30m	565n	XA§	High Efficiency	A	PD1025
2	CQX64-8	30m	10m	20	Water-clear	T-1	3.0	10m	180m%	60m	565n	A §		A	PD232j Ø
3	CQX64L8(A)	30m	10m	20	Water-clear	T-1	3.0	10m	180m%	60m	565n	A §		A	PD232k Ø
4	MT430UG	30m	15m	20	Transparent	T-1 3/4	2.8	20m	55m	25m	565n	27		♦	PD1199
5	TLUG144	30m†	15m		Diffused	T-1 3/4	2.8	20m	70m	25m	565n	27		A	PD1199 Ø
6	7610-4SERIES	30m	20m				2.5	20m	125m	50m		38	xx Res	A	PD1304a
7	7610-5SERIES	30m	20m				2.5	20m	125m	50m		38	xx Res	A	PD1304a
8	7611-4SERIES	30m	20m				2.5	20m	125m	50m		38	xx Res	A	PD1304a
9	7611-5SERIES	30m	20m				2.5	20m	125m	50m		38	xx Res	A	PD1304a
10	7630-4SERIES	30m	20m				2.5	20m	125m	50m		38	xx Res	A	PD1304c
11	7630-5SERIES	30m	20m				2.5	20m	125m	50m		38	xx Res	A	PD1304c
12	7650-4SERIES	30m	20m				2.5	20m	125m	50m		38	xx Res	A	PD1304b
13	7650-5SERIES	30m	20m				2.5	20m	125m	50m		38	Integ. Resistor	A	PD1304b
14	7651-4SERIES	30m	20m				2.5	20m	125m	50m		38	Integ. Resistor	A	PD1304b
15	7651-5SERIES	30m	20m				2.5	20m	125m	50m		38	Integ. Resistor	A	PD1304b
16	GL5NG10	30m	20m				2.8	20m	85m	30m	565n	28			None Ø
17	L111CG	30m	20m	30	Water-clear		3.0	20m	120m	30m	562n	5A		A	PD50t
18	PG3668S	30m	20m		Transparent		2.5	20m	125m	50m	560n	38	Lens:Pale Green		PD1396 Ø
19	SLP236C50	30m†	20m		Transparent		2.1	20m	70m	25m	565n	28		A	PD1293c
20	SLP260C	30m†	20m		Transparent		2.1	20m	70m	25m	565n	28		A	PD1293n
21	7631-4SERIES	30m	20m			Panel-mount	2.5	20m	125m	50m		38	Integ. Resistor	A	PD1304c
22	7631-5SERIES	30m	20m			Panel-mount	2.5	20m	125m	50m		38	Integ. Resistor	A	PD1304c
23	CMD54521	30m	20m	28	Transparent	T-1 3/4	3.0	20m	105m	35m	565n	5A		A	PD16ao Ø
24	MV64521	30m	20m	35		T-1 3/4	3.0	20m	120m	30m	562n	5A			PD16a
25	TLG154	30m†	20m		Diffused	T-1 3/4	2.8	20m	70m	25m	565n	27		A	PD1202 Ø
26	HLMP3590	35m	20m	32	Water-clear		3.0	20m	135m	25m	565n	2A		B	PD941
27	TLG143	40m†	15m		Transparent	T-1 3/4	2.8	20m	70m	25m	565n	27		A	PD1199 Ø
28	TLUG163	40m†	20m		Transparent	T-1	2.8	20m	70m	25m	565n	27		A	PD1203 Ø
29	LDG5591	40m	20m	24	Transparent	T-1 3/4	3.0	20m	200m	60m	560n	5A%	Tr/Tf 50ns Typ	B	PD16ak Ø
30	LG5411PO(A)	40m	25m	20	Transparent	T-1 3/4	3.0	10m	150m	45m	560n	5A%	Super Bright	A ♦	PD16ah Ø
31	CQX64-9	50m	10m	20	Water-clear	T-1	3.0	10m	180m%	60m	565n	A §		A	PD232j Ø
32	CQX64L9(A)	50m	10m	20	Water-clear	T-1	3.0	10m	180m%	60m	565n	A §		A	PD232k Ø
33	TLPG143	50m	15m	22	Transparent		2.8	20m	70m	25m	555n	27		♦	PD1101a Ø
34	550-5604	50m	20m	25	Water-clear		2.5	20m	125m	50m	555n	38			PD66a
35	550-5605	50m	20m	25	Water-clear		2.5	20m	125m	50m	555n	38			PD67a
36	L121CG	50m	20m	30	Water-clear		2.5	20m	75m	35m	555n	38		A	PD50n
37	559-5601-001	50m	20m	25	Water-clear	Panel-mount	2.5	20m	125m	50m	555n	38			PD991
38	559-5601-003	50m	20m	25	Water-clear	Panel-mount	2.5	20m	125m	50m	555n	38			PD991a
39	559-5601-004	50m	20m	25	Water-clear	Panel-mount	2.5	20m	125m	50m	555n	38			PD991b
40	559-5601-005	50m	20m	25	Water-clear	Panel-mount	2.5	20m	125m	50m	555n	38			PD991c
41	559-5601-006	50m	20m	25	Water-clear	Panel-mount	2.5	20m	125m	50m	555n	38			PD991d
42	559-5601-007	50m	20m	25	Water-clear	Panel-mount	2.5	20m	125m	50m	555n	38			PD991e
43	561-5601-050	50m	20m	25	Water-clear	Panel-mount	2.5	20m	125m	50m	555n	38			PD1017
44	561-5601-060	50m	20m	25	Water-clear	Panel-mount	2.5	20m	125m	50m	555n	38			PD1017a
45	561-5601-070	50m	20m	25	Water-clear	Panel-mount	2.5	20m	125m	50m	555n	38			PD1017b
46	561-5601-080	50m	20m	25	Water-clear	Panel-mount	2.5	20m	125m	50m	555n	38			PD1017c
47	561-5601-090	50m	20m	25	Water-clear	Panel-mount	2.5	20m	125m	50m	555n	38			PD1017d
48	561-5601-100	50m	20m	25	Water-clear	Panel-mount	2.5	20m	125m	50m	555n	38			PD1017e
49	550-5606	50m	20m	25	Water-clear	Side-mount	2.5	20m	125m	50m	555n	38			PD68a
50	ESBG5501	50m	20m		Water-clear	T-1 3/4	2.5	20m	125m	50m	555n	38		A	PD28b
51	TLUG143	60m†	15m		Transparent	T-1 3/4	2.8	20m	70m	25m	565n	27		A	PD1199 Ø
52	L32R-G12-2112	60m	20m	28		Panel-mount	12	20m	125m	50m	555n	3A			PD1058b
53	L32R-G12-2312	60m	20m	28		Panel-mount	12	20m	125m	50m	555n	3A			PD1058a
54	L32R-G24-2112	60m	20m	28		Panel-mount	24	20m	125m	50m	555n	3A			PD1058b
55	L32R-G24-2312	60m	20m	28		Panel-mount	24	20m	125m	50m	555n	3A			PD1058a
56	TLUG154	60m†	20m		Diffused	T-1 3/4	2.8	20m	70m	25m	565n	27		A	PD1202 Ø
57	HLMP3950	80m	20m	24	Water-clear	T-1 1/2	3.0	20m	135m	30m	565n	2A		B	PD940
58	LDG5592	80m	20m	24	Transparent	T-1 3/4	3.0	20m	200m	60m	560n	5A%	Tr/Tf 50ns Typ	B	PD16ak Ø
59	NSL7210	80m	20m	24	Water-clear	T-1 3/4	2.5	20m	120m	35m	565n	5A		B	PD284 Ø
60	HSBG5501	100m	20m	28	Water-clear		2.5	20m	125m	50m	555n	38			PD940 Ø
61	L131CG	100m	20m	30	Water-clear		2.5	20m	100m	50m	555n	38		A	PD50n
62	TLUG153	120m†	20m		Transparent	T-1 3/4	2.8	20m	70m	25m	565n	27		A	PD1202 Ø
63	SEL1131G	0.2	10m		Diffused		2.5	10m		30m	570n	28		A	PD501
64	HLMP3568	200m	20m	40	Diffused	T-1 3/4	3.0	20m	120m	30m	565n	5A		B	PD392
65	LA5521D(3)	600m	20m	50	Diffused		2.0	10m			567n			A	PD1249
66	MV52640	.80	20m	90		T-1	3.0	20m	120m	30m	565n	5A		B	PD77m
67	AL102V	20 $	20m				4.5	20m		20m		67			PD235 Ø

LED LAMP, BLUE

71	LDB5410(A)	6.0m†	20m	16	Water-clear	T-1 3/4	8.0	20m	150m	25m	480n	5A%	For Spectroscopy	B	PD28p Ø

LED LAMP, BICOLOR RED-GREEN

75	CQT12					Rectangular	2.2	20m		60m	565n				PD1082
76	SLM23VM					Rectangular	2.0	10m	75m	25m	650n				PD1140
77	AND101RG	0.3m	20m				2.6	20m	75m	25m	700n	5A	Separate anodes		PD332
78	SLP541D	300u†	20m		Diffused		2.2	20m	70m	25m	565m	28		AR	PD1327
79	LTL52RG	400u	10m	54	Diffused	Cylindrical	2.8	20m	40m	15m	697n	5A		♦	PD1358
80	TLMV2100	400u	10m	70	Water-clear	Herm. Can	3.0	10m			635n	5A%	Typ P 70mW,I 23mA	M	PD1384
81	CQX31	400u	10m	50	Diffused	Low-dome	2.0	20m	150m	50m	660n	5A%	Separate anodes	N	PD395a
82	LA6212RGH	400u	20m		Milk-white		2.0	10m						AQ	PD1278
83	SLP531D	400u†	20m		Milk-white		2.1	20m	70m	25m	565n	28		AQ	PD1327
84	SLP532D40	400u†	20m		Milk-white		2.1	20m	70m	25m	565n	28		AQ	PD1328
85	SLP575D40	400u†	20m		Diffused		2.1	20m	70m	25m	565m	28		AQ	PD1329
86	559-3501-003	500u	10m				2.4	10m	60m	30m	565n	28	Seperate Cathodes		PD1246
87	559-3501-004	500u	10m				2.4	10m	60m	30m	565n	28	Seperate Cathodes		PD1246a
88	559-3501-005	500u	10m				2.4	10m	60m	30m	565n	28	Seperate Cathodes		PD1246b
89	559-3501-006	500u	10m				2.4	10m	60m	30m	565n	28	Seperate Cathodes		PD1246c
90	559-3501-007	500u	10m				2.4	10m	60m	30m	565n	28	Seperate Cathodes		PD1246d
91	GL9NP2	500u	10m		Diffused	Rectangular	2.3	10m	85m	15m	695	28	GaP+GaP		None
92	GL9NP4	500u	10m		Diffused	Rectangular	2.3	10m	35m	15m	695n	28	GaP+GaP		None
93	GL9NP24	500u	10m		Diffused	Rectangular	2.3	10m	35m	15m	695n	28	GaP+GaP		None
94	521-9178	0.5m	10m			T-1 1/2	2.3	10m	35m	50m	695n	28		M	PD542
95	MT205HRG	500u	15m		Milk-white	Rectangular	2.8	20m	150m	25m	635n	27		♦	PD1355
96	MT208HRG	500u	15m		Milk-white	Rectangular	2.8	20m	150m	25m	635n	27		♦	PD1355a
97	LA3312RGH	500u	20m		Milk-white		2.0	10m						AQ	PD1277
98	LA5012RGH	500u	20m	60	Milk-white		2.0	10m						A	PD1248
99	LA5412RGH	500u	20m	60	Milk-white		2.0	10m						AQ	PD1276
100	OPL700	0.5m	20m	80			3.0	20m	120m	40m	690n	5A		A	None
101	TLRG101	0.5m	20m	180			2.6	20m	75m	25m	633n	27		♦	PD332 Ø
102	LST700	0.5m	20m	80		T-1 3/4	3.0	20m	120m	40m	690n	5A		A	PD16ag
103	LST710	0.5m	20m	80		T-1 3/4	3.0	20m	120m	40m	690n	5A		A	PD16ag
104	LST4053	500u	20m	80		T-1 3/4	3.0	20m	120m	40m	690n	5A		A	PD16ag
105	521-9177	0.6m	10m				3.0	10m	115m	25m	697n	5A		A	PD541
106	550-3004	600u	10m				3.0	10m	115m	25m	697n	5A			PD66a
107	550-3005	600u	10m				3.0	10m	115m	25m	697n	5A			PD67a
108	7310-5SERIES	600u	10m		Water-clear		2.8	10m	115m	25m		5A	Built-In Resistor	A	PD1304a
109	7311-5SERIES	600u	10m		Water-clear		2.8	10m	115m	25m		5A	Built-In Resistor	A	PD1304a
110	7330-5SERIES	600u	10m		Water-clear		2.8	10m	115m	25m		5A	Built-In Resistor	A	PD1304c

SYMBOLS AND CODES EXPLAINED IN INTERPRETER

2. LED LAMPS - Bicolor Red-Green (Cont'd)

IN ORDER OF COLOR AND: (1) INTENSITY (2) IF TEST (3) BEAM ANGLE & (4) TYPE No.

LINE No.	4 TYPE NUMBER	1 LUMINOUS INTENSITY MIN (cd)	2 IF TEST (A)	3 BEAM ANGLE θ HI (°)	LENS TYPE	LAMP STYLE	VF MAX (V)	IF TEST (A)	PD RATED MAX (W)	IF RATED MAX (A)	PEAK WAVE-LENGTH λP (m)	TEMP. RANGE CODE - +	FEATURES	LEAD CODE	OUTLINE DRAWING
1	7331-5SERIES	600u	10m		Water-clear		2.8	10m	115m	25m		5A	Built-In Resistor	A	PD1304c
2	7350-5SERIES	600u	10m		Water-clear		2.8	10m	115m	25m		5A	Built-In Resistor	A	PD1304b
3	7351-5SERIES	600u	10m		Water-clear		2.8	10m	115m	25m		5A	Integ. Resistor	A	PD1304c
4	MT5491RG	600u	10m	30	Milk-white		3.0	10m	60m	20m	700n	27	RG	♦	PD607
5	550-3006	600u	10m			Side-mount	3.0	10m	115m	25m	697n	5A			PD68a
6	SLP520D	600u†	20m		Milk-white		2.1	20m	70m	30m	565n	2A		AQ	PD1326
7	L111DRG	1.0m	20m	55	Diffused		3.0	20m	75m	25m	700n	38			PD607
8	L611DRG	1.0m	20m	55	Diffused		3.0	20m	75m	25m	700n	38	Stackable		PD1056a
9	OPL711	1.0m	20m	80			3.0	20m	120m	40m	565n	5A		A	PD257d
10	OPL712	1.0m	20m	80			3.0	20m	120m	40m	635n	5A		A	PD257d
11	OPL713	1.0m	20m	80			3.0	20m	120m	40m	385n	5A		A	PD257d
12	LD1133	1.0m	20m	100	Diffused	Cylindrical	3.0	20m	200m	60m	645n	5A%	Colorless Lens	♦	PD932a ∅
13	LD1103	1.0m	20m	100	Diffused	Rectangular	3.0	20m	200m	60m	645n	5A%	Colorless Lens	♦	PD935 ⊠
14	ORL710L	1.0m	20m	40		Side-mount	3.0	20m	120m	35m	565n	5A			PD507 ∅
15	LST700L	1.0m	20m	40		T-1 3/4	3.0	20m	120m	40m	690n	5A		A	PD18a
16	LST710L	1.0m	20m	40		T-1 3/4	3.0	20m	120m	40m	690n	5A		A	PD18a
17	LST711	1.0m	20m	80		T-1 3/4	3.0	20m	120m	40m	565n	5A		A	PD16ag
18	LST712	1.0m	20m	80		T-1 3/4	3.0	20m	120m	40m	635n	5A		A	PD16ag
19	LST713	1.0m	20m	80		T-1 3/4	3.0	20m	120m	40m	585n	5A		A	PD16ag
20	SLP530D	1.2m†	20m		Milk-white		2.1	20m	70m	25m	565n	28		AQ	PD1294
21	MT116HRG	1.5m	15m	80	Milk-white		2.8	20m	150m	25m	635n	27	RG	♦	PD1353
22	CQT10B(A)	1.5m†	20m	100	Milk-white	Rectangular	3.0	20m	215m	100m	650n	A §		A	PD922 ⊠
23	CQT60(A)	1.5m†	20m	110	Milk-white	Rectangular	3.0	20m	215m	100m	650n	A §		A	PD1082 ⊠
24	CQT70(A)	1.5m†	20m	110	Milk-white	Rectangular	3.0	20m	215m	100m	650n	A §		A	PD1086 ⊠
25	GL9ND2	1.5m	20m		Diffused	Rectangular	2.8	20m	85m	30m	635n	28	Gap+GaAsP on GaP		None
26	GL9ND4	1.5m	20m		Diffused	Rectangular	2.8	20m	85m	30m	635n	28	GaP+GaAsP on GaP		None
27	GL9ND24	1.5m	20m		Diffused	Rectangular	2.8	20m	85m	30m	635n	28	GaP+GaAsP on GaP		None
28	LD1134	1.6m	20m	100	Diffused	Cylindrical	3.0	20m	200m	60m	645n	5A%	Colorless Lens	♦	PD932a ∅
29	LD1104	1.6m	20m	100	Diffused	Rectangular	3.0	20m	200m	60m	645n	5A%	Colorless Lens	♦	PD935 ⊠
30	550-3006-004	1.8m	10m				2.3	10m							P5205
31	559-3001-001	1.8m	10m			Panel-mount	3.0	10m	115m	25m	697n	5A		♦	PD991
32	559-3001-003	1.8m	10m			Panel-mount	3.0	10m	115m	25m	697n	5A		♦	PD991a
33	559-3001-004	1.8m	10m			Panel-mount	3.0	10m	115m	25m	697n	5A		♦	PD991b
34	559-3001-005	1.8m	10m			Panel-mount	3.0	10m	115m	25m	697n	5A		♦	PD991c
35	559-3001-006	1.8m	10m			Panel-mount	3.0	10m	115m	25m	697n	5A		♦	PD991d
36	559-3001-007	1.8m	10m			Panel-mount	3.0	10m	115m	25m	697n	5A		♦	PD991e
37	LDRG2340	1.8m†	20m	70	Water-clear	Rectangular	3.0	20m	70m	30m	645n	5A%	Surface Mount LED	D	PD1140 ⊠
38	GL5NP5	2.0m	10m		Diffused	Cylindrical	2.3	10m	35m	15m	695n	28	GaP+GaP		None
39	SLP540D	2.0m†	20m		Milk-white		2.2	20m	70m	25m	565n	28		AR	PD1327
40	VRBG5341K	2.0m	20m		Diffused	Rectangular	2.5	20m	75m	30m	555n	38			PD1397 ⊠
41	ORL711L	2.0m	20m	40		Side-mount	3.0	20m	120m	35m	565n	5A			PD507 ∅
42	ORL712L	2.0m	20m	40		Side-mount	3.0	20m	120m	35m	565n	5A			PD507 ∅
43	ORL713L	2.0m	20m	40		Side-mount	3.0	20m	120m	35m	565n	5A			PD507 ∅
44	LST711L	2.0m	20m	40		T-1 3/4	3.0	20m	120m	40m	565n	5A		A	PD18a
45	LST712L	2.0m	20m	40		T-1 3/4	3.0	20m	120m	40m	635n	5A		A	PD18a
46	LST713L	2.0m	20m	40		T-1 3/4	3.0	20m	120m	40m	385n	5A		A	PD18a
47	SPRG5111	2.0m	20m		Milk-white	T-1 3/4	2.5	10m	75m	30m	700n	38			PD940
48	OPL271	2.5m†		80	Diffused	T-1	2.5	20m		50m	565n				PD16ae ∅
49	LD1005	2.5m	10m	100	Diffused	T-1 3/4	3.0	20m	200m	60m	645n	5A%	Colorless Lens	♦	PD934 ∅
50	LD1135	2.5m	20m	100	Diffused	Cylindrical	3.0	20m	200m	60m	645n	5A%	Colorless Lens	♦	PD932a ∅
51	LD1105	2.5m	20m	100	Diffused	Rectangular	3.0	20m	200m	60m	645n	5A%	Colorless Lens	♦	PD935 ⊠
52	LST4753	2.5m	20m	80		T-1 3/4	3.0	20m	120m	40m	635n	5A		A	PD16ag
53	VRBG5315S	3.0m	20m		Diffused		2.5	20m	75m	30m	555n	38			PD1398 ∅
54	GL9ED2	3.0m	20m		Diffused	Rectangular	2.8	20m	85m	30m	565n	28	GaP+GaAsP on GaP		None
55	LD1006	4.0m	10m	100	Diffused	T-1 3/4	3.0	20m	200m	60m	645n	5A%	Colorless Lens	♦	PD934 ∅
56	SLP540A	4.0m†	20m		Water-clear		2.2	20m	70m	25m	565n	28		AR	PD1294
57	VRBG5314S	4.0m	20m		Diffused		2.5	20m	75m	30m	555n	38			PD1398 ∅
58	LN117WP23	4.5m†	20m			Arch	2.2	20m	90m	30m	565n	28		AQ	PD436
59	GL5ND5	5.0m	20m		Diffused	Cylindrical	2.8	20m	85m	30m	635n	28	Gap+GaAsP on GaP		None
60	LD1007	6.3m	10m	100	Diffused	T-1 3/4	3.0	20m	200m	60m	645n	5A%	Colorless Lens	♦	PD934 ∅
61	CQT24(A)	10m†	10m	70	Transparent	T-1 3/4	2.2	10m	215m	100m	650n	A §		A	PD232k ∅

LED LAMP, BICOLOR RED-YELLOW

65	SLM23VY					Rectangular	2.0	10m	75m	25m	650n				PD1140
66	CQX32	400u	20m	50	Diffused	Low-dome	2.0	20m	150m	50m	660n	5A%	Separate Anodes	N	PD395a
67	GL9HP2	500u	10m		Diffused	Rectangular	2.3	10m	35m	15m	695n	28	GaAsP on GaP+GaP		None
68	GL9HP4	500u	10m		Diffused	Rectangular	2.3	10m	35m	15m	695n	28	GaAsP on GaP+GaP		None
69	OPL311	1.0m†		150	Diffused		2.5	20m		50m	565n				PD987 ∅
70	OPL309	1.0m†		150	Diffused	Cylindrical	2.5	20m		50m	635n				PD987
71	OPL209A	1.0m†		150	Diffused	T-1	2.2	20m		50m	690n		Red/Yellow		PD16ae
72	OPL211	1.0m†		150	Diffused	T-1	2.5	20m		50m	565n				PD16ae ∅
73	OPL1211	1.0m†		150	Diffused	T-1	2.5	20m		50m	565n				PD15C ∅
74	SDL57L	1.5m†		65			2.0	10m		50m	635n				PD983 ∅
75	LST743	2.0m†		80			2.5	20m		40m	610n▼				PD404 ∅
76	OPL213	2.0m†		150	Diffused	T-1	2.5	20m		50m	585n				PD16ae ∅
77	OPL743	2.0m†		80		T-1	2.5	20m		40m	610n▼				PD77 ∅
78	OPL1409	2.0m†		150	Diffused	T-1	2.5	20m		50m	635n		R/yel		PD15C ∅
79	SPRY5111	2.0m	10m		Diffused	T-1 3/4	2.5	10m	75m	30m	700n	38			PD940
80	VRPY5341K	2.0m	20m		Diffused	Rectangular	2.5	20m	75m	30m	575n	38			PD1397 ⊠
81	TLHY0400	2.5m	10m	30	Diffused		3.0	20m	150m	30m	585n	XA§	Separate anodes	AQ	PD1182
82	LST743L	4.0m†		40			2.5	20m		40m	610n▼				PD340 ∅
83	VRPY5315S	10m	20m		Diffused		2.5	20m	75m	30m	570n	38			PD1397 ∅
84	VRPY5314S	12m	20m		Diffused		2.5	20m	75m	30m	570n	38			PD1397 ∅

LED LAMP, BICOLOR RED-ORANGE

88	SLM23VD					Rectangular	2.0	10m	75m	25m	650n				PD1140

LED LAMP, BICOLOR ORANGE-GREEN

92	MT205OG	500u	15m		Milk-white	Rectangular	2.8	20m	150m	25m	610n	27		♦	PD1355
93	MT208OG	500u	15m		Milk-white	Rectangular	2.8	20m	150m	25m	610n	27		♦	PD1355a
94	TLSV5100	630u	10m	100	Diffused	Rectangular	3.0	20m	150m	30m	630n	47	Separate anodes		PD1388
95	TLUV5300	1.0m	10m	100	Diffused	T-1 3/4	3.0	20m	150m	30m	630n	47	Separate anodes		PD1000
96	TLBV5380	1.0m	20m	80	Diffused	T-1 3/4			200m	30m	630n	47	Org Blink/Grn Cnt		PD1000
97	LTL907HK	1.2m	20m	160	Water-clear		2.8	20m	100m	15m	635n	5A	Mini	D	PD1140
98	MT116OG	1.5m	15m	80	Milk-white		2.8	20m	150m	25m	610n	27	OG	♦	PD1353
99	CQT80L(A)	2.0m†	20m	100	Transparent		3.0	20m	215m	100m	650n	A §	Octagonal	A	PD262m

LED LAMP, BICOLOR YELLOW-GREEN

103	MT205YG	500u	15m		Milk-white	Rectangular	2.8	20m	150m	25m	585n	27		♦	PD1355
104	MT208YG	500u	15m		Milk-white	Rectangular	2.8	20m	150m	25m	585n	27		♦	PD1355a
105	SLP575D42	1.0m†	20m		Diffused		2.1	20m	70m	25m	565m	28		AQ	PD1329
106	MT116YG	1.5m	15m	80	Milk-white		2.8	20m	150m	25m	585n	27	YG	♦	PD1353

LED LAMP, 3-COLOR RED-YELLOW-GREEN

110	SLM35VYM					Rectangular	2.0	10m	75m	25m	650n				PD1414

2. LED LAMPS

IN ORDER OF COLOR AND: (1) INTENSITY (2) IF TEST (3) BEAM ANGLE & (4) TYPE No.

LINE No.	4 TYPE NUMBER	1 LUMINOUS INTENSITY MIN (cd)	2 IF TEST (A)	3 BEAM ANGLE θ HI (°)	LENS TYPE	LAMP STYLE	VF MAX (V)	IF TEST (A)	PD RATED MAX (W)	IF RATED MAX (A)	PEAK WAVE-LENGTH λP (m)	TEMP. RANGE CODE - +	FEATURES	LEAD CODE	OUTLINE DRAWING
LED LAMP, 4-COLOR RED-ORANGE-YELLOW-GREEN															
4	SLM45VDYM					Rectangular	2.0	10m	75m	25m	650n				PD1414

Laser diodes for fiber optic applications are listed beginning on page 96.

3. INFRARED LED LAMPS (IREDs)

IN ORDER OF: (1) POWER OUTPUT (2) IF TEST (3) PEAK WAVELENGTH & (4) TYPE NUMBER

LINE No.	4 TYPE NUMBER	1 MIN. POWER OUTPUT Po (W)	2 IF TEST (A)	VF MAX (V)	IF TEST (A)	MAX RATINGS @ 25°C PD (W)	IF (A)	VR (V)	TEMP RNG. CODE - +	3 PEAK WAVE-LENGTH λp (m)	MIN AXIAL INTENSITY Ie W/Sr	IF TEST (A)	BEAM ANGLE θHI (°)	IF TEST (A)	SPECTRAL BAND WIDTH Δλ (m)	RESP. TIME (s)	MAT. & FEATURE MAT	LEAD CODE	DRAWING
IRED LAMP, Po < 0.1 mW																			
4	OP140			1.7	10m	50m	40m	2.0	48		50u$	40m					BC		PD320 ⊠
5	OP140SLA			1.7	20m	50m	40m	2.0	48		400u	20m	20				BC	A	PD320 ⊠
6	OP140SLB			1.7	20m	50m	40m	2.0	48		300u	20m	20				BC	A	PD320 ⊠
7	OP140SLC			1.7	20m	50m	40m	2.0	48		200u	20m	20				BC	A	PD320 ⊠
8	OP140SLD			1.7	20m	50m	40m	2.0	48		100u	20m	20				BC	A	PD320 ⊠
9	OP160SLA			1.6	20m		40m	2.0	48		400u$	20m	16				XX	A	PD33g
10	OP160SLB			1.6	20m		40m	2.0	48		300u$	20m	16				XX	A	PD33g
11	OP160SLC			1.6	20m		40m	2.0	48		200u$	20m	16				XX	A	PD33g
12	OP160SLD			1.6	20m		40m	2.0	48		100u$	20m	16				XX	A	PD33g
13	CQX61			2.3	100m	200m	100m	5.0	5F%	830n	150u	50m	60		40n	10n#	AD FO	M	PD469
14	CQX61A(A)			2.2	100m		100m	5.0	4A%	830n					40n	15n#	M		PD553
15	CQX62			2.3	100m	200m	100m	5.0	5F%	830n	200u	50m	10		40n	30n#	AD FO	M	PD470
16	CQX63			2.3	100m	200m	100m	5.0	5F%	830n	100u	50m	10		40n	10n#	AD FO	M	PD470
17	CQX63A(A)			2.2	100m		100m	5.0	4A%	830n					40n		XX		PD553
18	DN304			2.0	20m	150m	100m	5.0	38	850n	30m*	20m			40n			A	PD279a
19	DN305(1)			2.0	20m	150m	100m	5.0	38	850n	80m*	20m			40n			A	PD279
20	NDL4103			2.3	100m		150m	2.0	26⊠	850n				100m	40n	10n#	EC		PD1013
21	1A124			2.0	100m	200m	100m	.50	48§	860n	10m†	100m	15		70n	10n#	XX	F ⊠	PD546 Ø
22	IRE161			2.0	100m	450m	150m	3.0	48	880n					45n	20n#	CA		None
23	LTE239			1.8	20m	100m	50m	5.0	5A	880n	400u$	20m	16		50n	570n#	CE	♦	PD1210e
24	LTE239C			1.8	20m	100m	50m	5.0	5A	880n	400u$	20m	16		50n	570n#	CE	♦	PD1210e
25	LTE4238			1.8	20m	100m	50m	5.0	5A	880n	1.0m$	20m	20		50n	570n#	CE	♦	PD1210f
26	LTE4238C			1.8	20m	100m	50m	5.0	5A	880n	1.0m$	20m	20		50n	570n#	CE	♦	PD1210f
27	LTE5238			1.8	20m	100m	50m	5.0	5A	880n	800u$	20m	40		50n	570n#	CE	♦	PD1210f
28	LTE5238C			1.8	20m	100m	50m	5.0	5A	880n	800u$	20m	40		50n	570n#	CE	♦	PD1210f
29	L1909			1.6	50m	150m	80m	5.0	28	890n					80n	400n	CE		PD299a
30	BN101			1.5	20m	150m	100m	4.0	3C	925n	6.5m*	20m		20m	50n		CE	A	PT14b
31	BN201			1.5	20m	150m	100m	4.0	3C	925n	300u*	20m		20m	50n		CE		TO-18 Ø
32	BN302			1.5	20m	100m	50m	4.0	38	925n	7.0m*	20m		20m	50n		CE		PD28b
33	BN401			1.5	20m	100m	50m	4.0	38	925n	800u*	20m		20m	50n		CE		PD420 Ø
34	BN501			1.5	20m	60m	40m	4.0	38	925n	1.5m*	20m		20m	50n		CE	A	PD1110
35	BN503			1.5	20m	100m	50m	4.0	38	925n	0.4m*	20m			50n		CE	A	PD1291
36	BN504			1.5	20m	100m	50m	4.0	38	925n	1.0m*	20m			50n		CE	A	PD1382
37	FN511			1.5	20m	150m	100m	4.0	38	925n	30m*	0.4m			50n			A	PD1113
38	L1854			1.4	50m	150m	100m	5.0	2A	940n					40n	1.1u#	BC		PD138
39	LLL1052			1.6	20m		40m	5.0	48	940n					50n	600n#	XX		PD54
40	LST1056			1.6	20m		150m	5.0	5A	940n					50n	600n#	XX		PD16
41	LTE209			1.6	20m	100m	50m	5.0	5A	940n	200u$	20m	16		50n		BC	♦	PD1210d
42	LTE209C			1.6	20m	100m	50m	5.0	5A	940n	200u$	20m	16		50n		BC	♦	PD1210d
43	LTE301			1.6	20m	100m	50m	5.0	5A	940n	50u$	20m	40		50n		BC sq	♦	PD1282
44	LTE4208			1.6	20m	100m	50m	5.0	5A	940n	50u$	20m	20		50n		BC	♦	PD1210b
45	LTE4208C			1.6	20m	100m	50m	5.0	5A	940n	50u$	20m	20		50n		BC	♦	PD1210b
46	LTE5208			1.6	20m	100m	50m	5.0	5A	940n	350u$	20m	40		50n		BC	♦	PD1210f
47	LTE5208C			1.6	20m	100m	50m	5.0	5A	940n	350u$	20m	40		50n		BC	♦	PD1210f
48	OPL1052			1.6	20m		50m	5.0	48	940n					50n	600n#	XX		PD16ae
49	SE303(2)			5.0	1.0	150m	100m	5.0	8 §	940n				50m	60n	1.0u*	BC		PD548
50	SE306			1.4	10m	100m	50m	5	4A%	940n	.2m	10m			60n		BC	B	PD1048
51	SE308(2)			1.4	20m	100m	50m	5	4A%	940n	.5m	20m			60n		BC	B	PT128
52	1N6266			1.7	100m	170m	100m	3.0	6F	945n	25m	100m	20		60n		BC	Y Ø	PD171a Ø
53	SE1003			1.4	50m		100m	5.0	38%	950n	12	50m			50n		CE	A	PD280j
54	SFH405-2			1.6	50m	65m	40m	4.0	X8§	950n	1.6m		16		20n	1.0u*	BC		PT111
55	SFH405-3			1.6	50m	65m	40m	4.0	X8§	950n	2.5m		16		20n	1.0u*	BC		PT111
56	SEP8706-4		20m	1.6	20m	100m	60m	3	4A	880n	1.6m	20m	50	20m		0.6u#	CE	A	PT89
57	L1915		50m	1.9	50m	190m	100m	5.0	2A	890n					80n	400n	CE		PD299a
58	L1915-01		50m	1.9	50m	190m	100m	5.0	2A	890n					80n	400n	CE		PT14b
59	L1915-02		50m	1.9	50m	190m	100m	5.0	2A	890n					80n	400n	CE		PV142b
60	LN66		50m	1.6	100m	160m	100m	3.0	28	950n			25	50m	50n		BC		PD280f
61	IRE387-002	3.0u	100m	1.5	150m		150m		16	1300n					100n	5.0n#	BC-FO	Z	TO-46
62	SE3362X01	5.0u	100m	2.0	100m		150m	1.0	5C⊠	820n			15		35n	20n*	CE FO	Z	PD22h
63	HFE4000X12	5.0uC	100m	2.0	100m		150m	5.0	6F%	850n					50n	10n#	CE FO	Z	PD22h
64	HFE4003X22	5.0uC	100m	2.0	100m		150m	5.0	6F%	850n					50n	10n#	CE FO	Z	PD22h Ø
65	IRE387-003	6.0u	100m	1.5	150m		150m		16	1300n					100n	5.0n#	BC-FO	Z	TO-46
66	FED150L1JA	7.0u	100m	2.0	100m		150m		47	1520n				100m	150n		EF	A	PD953
67	LDT387	10u					200m			1.27u					100n	10n#	EF		TO-46
68	SE3362X02	10u	100m	2.0	100m		150m	1.0	5C⊠	820n			15		35n	20n*	CE FO	Z	PD22h
69	HFE4000X13	10uC	100m	2.0	100m		150m	5.0	6F%	850n					50n	10n#	CE FO	Z	PD22h Ø
70	HFE4003X23	10uC	100m	2.0	100m		150m	5.0	6F%	850n					50n	10n#	CE FO	Z	PD22h Ø
71	FED130JH	10u	100m	2.0	100m		150m		47	1340n				100m	125n		CE		None
72	IRE491	12u	100m	1.5	150m		150m		16	1300n					100n	5.0n#	BC-FOP	♦	PD1289
73	HFE4020-012	15uC	50m	1.8	50m		100m%	1.0 %	4A%	850n					50n		CE FO	A	PD1287 Ø
74	HFE4023-022	15uC	50m	1.8	50m		100m%	1.0 %	4A%	850n					50n		CE FO	A	PD1287 Ø
75	SE3362X03	15u	100m	2.0	100m		150m	1.0	5C⊠	820n			15		35n	20n*	CE FO	Z	PD22h
76	FED130L1JA	15u	100m	2.0	100m		150m		47	1340n				100m	125n		EF	A	PD953
77	SE4355-002	20u	50m	2.5	50m		50m	5.0	4C⊠	665n			32		22n	150n*	CA FO	A	PD1287
78	SE3362X04	20u	100m	2.0	100m		150m	1.0	5C⊠	820n			15		35n	20n*	CE FO	Z	PD22h
79	HFE4000X14	20uC	100m	2.0	100m		150m	5.0	6F%	850n					50n	10n#	CE FO	Z	PD22h
80	HFE4003X24	20uC	100m	2.0	100m		150m	5.0	6F%	850n					50n	10n#	CE FO	Z	PD22h Ø
81	HFE4020-013	30uC	50m	1.8	50m		100m%	1.0 %	4A%	850n					50n		CE FO	A	PD1287 Ø
82	HFE4023-023	30uC	50m	1.8	50m		100m%	1.0 %	4A%	850n					50n		CE FO	A	PD1287 Ø
83	MII68550(A)	40u	20m	2.0	20m			3.0		700n							CA		PD1179
84	FPE810	40u	20m	1.7	20m	100m	100m	6.0	5A	900n						10n#	BC	A	PD608a
85	FED086L3JA	40u	100m	2.2	100m		150m	2.0	47	890n				100m	50n		CE	A	PD953
86	C86008E	40u	200m	2.5	200m		200m		46⊠	820n			15		60n	3.0n	CEFO	♦	PD371
87	C86009E	40u	200m	2.0	200m		1.0		46	820n						3.0n#	CE FO	♦	PD371
88	CQY11C	50u†	20m	1.3 †	30m	50m	30m	2.0	C §	880n	1.2m	20m	6.0		40n	30n#	BC	M	TO18 Ø
89	SEP8526-001	50u$	20m	1.5	20m			3	48	935n			50			600n#	BC	A ♦	PT89 ⊠
90	MIC33TSE	.05m$	20m	1.6	20m		40m	2.0	48	940n						600n#	BC		PT31c
91	MLED910	50u	50m	1.5	50m	350m	150m	3.0	6C§	900n	660u†	50m			40n		BC PN	A	None
92	FED078L1JA	50u	100m	2.5	100m		150m	2.0	47	780n▼				100m	30n		CE	A	PD953
93	FED083L1JA	50u	100m	2.2	100m		150m	2.0	47	830n▼				100m	40n		CE	A	PD953
94	FED088L1JA	50u	100m	2.3	100m		150m	2.0	47	880n▼				100m	50n		CE	A	PD953
95	C86013E	50u	200m	1.8	200m		200m		35⊠	1.3u					60n	10n#	CB	♦	PD371
96	GFOE1A2	60u	50m	1.7	50m	100m	60m	6.0	58	940n					60n	200n*	BCFO	AB	PT115
97	FED086L1JA	65u	100m	2.2	100m		150m	2.0	47	890n				100m	40n		CE	A	PD953
98	IRE160FB	80u	100m	2.2 †	100m		150m%	3.0 %	48	820n					40n	14n#	FO	A	PD357a
99	MFOE71	165u†	100m	2.0	100m	150m	150m	6.0	48	820n							XX	A	PT129
100	SE303A(1)	3.0m	50m	1.5	50m	150m	100m	5.0	38%	940n	10m	50m			60n		BC	A	PD1239
101	SE310(1)	4.0m	50m	1.1 †	50m	100m	50m	5.0	4A%	940n	10m	50m			60n		BC	A	PD1372
102	SE307(2)	20m	50m	1.5	50m	150m	100m	5.0	4A%	940n	10m	50m			60n		BC	A	PD1239
IRED LAMP, Po ≥ 0.1 mW																			
106	SEP8506-001	50u$	20m	1.5	20m			3	48	935n			50			600n#	BC	A ♦	PT89 ⊠
107	SFH404	100u		1.7	5.0m		70m	2.0	48%	830n	1.5m†		60		40n		EC	A	PD455 ⊠
108	SE4352-002	100u	50m	2.0	50m		100m	1.0	4C⊠	820n			32		35n	20n*	CE FO	A	PD1287
109	STLD1600-1	100u	50m	2.0	50m		100m	2.0	6A	930n			24			700n#	BC	A	PD25a Ø
110	GFOE1A1	100u	50m	1.7	50m	100m	60m	6.0	58	940n					60n	200n*	BCFO	AB	PT115

SYMBOLS AND CODES EXPLAINED IN INTERPRETER

3. INFRARED LED LAMPS (IREDs) - Po ≥ 0.1 mW (Cont'd)

IN ORDER OF: (1) POWER OUTPUT (2) IF TEST (3) PEAK WAVELENGTH & (4) TYPE NUMBER

LINE No.	4 TYPE NUMBER	1 MIN. POWER OUTPUT Po (W)	2 IF TEST (A)	VF MAX (V)	IF TEST (A)	MAX RATINGS @ 25°C PD (W)	IF (A)	VR (V)	TEMP RNG. CODE - +	3 PEAK WAVE-LENGTH λp (m)	MIN AXIAL INTENSITY Ie W/Sr	IF TEST (A)	BEAM ANGLE θHI (°)	SPECTRAL BAND WIDTH Δλ (m)	IF TEST (A)	RESP. TIME (s)	MAT. & FEATURE MAT	LEAD CODE	DRAWING
1	C30116	100u	50m	2.0	50m		50m	2	4C	1.06u			12	60n		10n#	CJ	A ☑	PD106 Ø
2	C30116F	100u	50m	3.0	50m		50m		4C☑	1.06u			30	60n		10n#	CJ Flat	A ☑	PD106a Ø
3	FED086L2JA	100u	100m	2.2	100m		150m	2.0	47	890n				55n	100m		CE	A	PD953
4	C30133	100u	200m	2.5	200m		200m	2.0	47☑	820n			36	60n		3.0n#	CE FO	B §	PD100b Ø
5	S86018E	100u	200m	2.5	200m				49	850n				50n		3n	XX		PD551
6	S86021E	100u	200m	2.5	200m				49	850n				50n		3n	XX		PD552
7	GL504	140u	50m	1.4	50m	150m	100m	6.0	4C	950n			20	45n		1.0u	BC	A	PD12m Ø
8	SE3352X02	150u	100m	2.0	100m		150m	1.0	5C☑	820n			32	35n		20n*	CE FO	Z	PD22h
9	SE3352X12	150u	100m	2.0	100m		150m	1.0	5C☑	820n			32	35n		10n*	CE FO	Z	PD22h
10	C86011E	150u	200m	1.0	200m		200m		49☑	1.06u						10n#	CJ FO	♦	PD100a
11	CQY50	160u	20m	1.5	50m	150m	100m	2.0	C §	930n	180u	20m	35	40n		600n#	BC	A	PD25c Ø
12	AL109A	200u	20m	1.2	20m		22m%		68								BC		PD239 ☑
13	OP169SL	0.2m	20m	1.6	20m	80m	40m		48		.02m$	20m					BC	A	PD611
14	OP169SLC	0.2m	20m	1.6	20m	80m	40m		48		.19m$	20m					BC	A	PD611
15	OP169SLD	0.2m	20m	1.6	20m	80m	40m		48		.11m$	20m					BC	A	PD611
16	SEP8706-001	200u$	20m	1.7	20m	100m	60m	3	48	880n	140u	20m	50		20m	600n#	CE	A ♦	PT89 ☑
17	SE4352-003	200u	50m	2.0	50m		100m	1.0	4C☑	820n			32	35n		20n*	CE FO	A	PD1287
18	MLED930	200u	50m	1.5	100m	250m	150m	3.0	6C§	900n	1.5m†	100m		40n			BC PN	A	PD7 Ø
19	STLD1500-1	200u	50m	2.0	50m		100m	2.0	6A	930n			12			700n#	BC	B	PD93 Ø
20	SE1450-001	200u	50m	1.6	50m			3.0	5C	935n			24			700n#	BC	B ☑	PD93a ☑
21	SE1450-001L	200u	50m	1.6	50m		50m	3	5C	935n			24	36n	10m	0.6u#	BC	B ☑	PD93 Ø
22	GS3040-1	.20m	50m	1.6	50m		100m	2.0	6C☑	940n			12			700n#	BC		PT109
23	AL106A	200u	100m	1.7	100m		120m		68								BC		PD238 Ø
24	CQF24	200u	100m	2.5	100m	250m	100m	3	6C	880n	5m	100m		40n			CE	Z ♦	TO-46 Ø
25	FED086L3DB	200u	100m	2.2	100m		150m	2.0	49	890n				50n	100m		CE	Z	PD952
26	FED131X	0.2m	100m	2.0	100m		150m		49	1300n▼				120n	100m		CE	Z	PD42p
27	TLN103	250u	20m	1.2	20m	75m	40m	5.0	27	940n				50n	20m		BC	A	PD118a Ø
28	GS1140-1	.25m	50m	1.6	50m		100m	2.0	6C☑	940n			18			0.7u	BC		PT6h
29	STLD1600-2	270u	50m	1.5	50m		100m	6.0	6A	930n			24			700n#	BC	A	PD25a Ø
30	STLD1700-1	270u	50m	2.0	50m		100m	2.0	6A	930n			18			700n#	BC	A	PD25b Ø
31	F5F1	.28m△	20m	1.7	60m	100m	60m	6.0	5A§	940n	.28m	20m	30	60n			BC	B	PT110
32	MIC33TSD	.28m$	20m	1.6	20m		40m	2.0	48	940n						600n#	BC		PT31c
33	VTE7121	.28m△	20m	1.6	20m	50m	40m	3.0	48	940n	.28m	20m	30	60n		400n	BC	A	PD919
34	OP297C	300u$	20m	1.7	20m	333m	1.0	5.0	4A	875n							CE	A	PD16ar
35	CQY49B	300u	50m	1.5	50m	150m	100m	5.0	C §	930n	300u	50m	80	50n		600n#	BC	E	TO18 Ø
36	LN193	300u†	50m	1.5	50m	200m	100m	2.0	46	1300n			25	120n	50m		EF	Z	PD1290
37	IRE160FA	300u	100m	2.2 †	100m		150m%	3.0 %	48	820n				40n		14n#	FO	A	PD357
38	SE3450-011	300u$	100m	1.7	100m			3.0	5C	935n			90			600n#	BC	Y ♦	PD172 Ø
39	SE5450-011	300u$	100m	1.7	100m			3.0	5C	935n			20			600n#	BC	Y ♦	PD171c Ø
40	SEP8506-002	330u$	20m	1.5	20m			3	48	935n			50			600n#	BC	A ♦	PT89 ☑
41	SEP8526-002	330u$	20m	1.5	20m	100m	60m	3	48	935n			50		20m	600n#	BC	A ♦	PT89 ☑
42	SE1470-001	350u$	20m	1.8	50m			3.0	5C	880n			24			600n#	CE	B ☑	PD93a Ø
43	SE1470-001L	350u$	20m	1.8	50m			3.0	5C	880n			24			600n#	CE	B ☑	PD93 Ø
44	STLD1500-2	350u	50m	1.5	50m		100m	6.0	6A	930n			12			700n#	BC	B	PD93 Ø
45	SE1450-002	350u	50m	1.6	50m			3.0	5C	935n			24			700n#	BC	B ☑	PD93a ☑
46	SE1450-002L	350u	50m	1.6		75m	50m	3	5C	935n			24	36n	10m	0.6u#	BC	B ☑	PD93 Ø
47	GS3040-2	.35m	50m	1.6	50m		100m	2.0	6C☑	940n			12			700n#	BC		PT109
48	K6100	350u	50m	1.5	50m	200m	100m	6.0	58	940n			12			700n#	BC	B	PD567 Ø
49	CQY52	400u	20m	1.5	50m	150m	100m	2.0	C §	930n	450u	20m	35	40n		600n#	BC	A	PD25c Ø
50	SEP8507-001	400u	20m	1.5	20m			3.0	58	935n			50			600n#	BC	AA♦	PT152 ☑
51	IRL80A	400u△	20m	1.5	20m	100m	60m	3.0	4A%	950n	400u†	20m	30	20n	20m	2.0u	BC	♦	PD1399 ☑
52	ZME60	400u	50m	1.5	50m	75m	50m	3.0	5A	900n			18			1.0n	BC		PD36 Ø
53	OP123	400u	50m	1.5	50m		100m	2.0	6C	930n	400u$	50m	18	50n	50m	700n#	BC	A	PD25f Ø
54	STLD1700-2	400u	50m	1.5	50m		100m	6.0	6A	930n			18			700n#	BC	A	PD25b Ø
55	GS1140-2	.40m	50m	1.6	50m		100m	2.0	6C☑	940n			18			0.7u	BC		PT6h
56	K6150	400u	50m	1.5	50m	200m	100m	2.0	58	940n			18			700n#	BC	B	PD570 Ø
57	AL106B	400u	100m	1.7	100m		120m		68								BC		PD238 Ø
58	SE3352X03	400u	100m	2.0	100m		150m	1.0	5C☑	820n			32	35n		20n*	CE FO	Z	PD22h
59	SE3352X13	400u	100m	2.0	100m		150m	1.0	5C☑	820n			32	35n		10n*	CE FO	Z	PD22h
60	SEP8706-002	450u$	20m	1.7	20m	100m	60m	3	48	880n	560u	20m	50		20m	600n#	CE	A ♦	PT89 ☑
61	SEP8506-003	450u$	20m	1.5	20m			3	48	935n			50			600n#	BC	A ♦	PT89 ☑
62	VTE3121	500u†		1.5	20m	150m	50m	3.0	6C	940n	4.0m†		20		20m		BC	A	PD609
63	VTE3121L	500u†		1.5	20m	150m	50m	3.0	6C	940n	4.0m†		20		20m		BC	A	PD567
64	VTE3521	500u†		1.6	20m	100m	50m	3.0	4A	940n	500u†		40		20m		BC	A	PD1109
65	OP160W	500u	20m	1.6	20m		40m	2.0	48				40				BC	B	PD364 Ø
66	OP161SL	0.5m	20m	1.6	20m	80m	40m		48		.05m$	20m	8				BC	A	PD257d
67	OP161SLA	0.5m	20m	1.6	20m	80m	40m		48		1.9m$	20m	8				BC	A	PD257d
68	OP161SLB	0.5m	20m	1.6	20m	80m	40m		48		1.4m$	20m	8				BC	A	PD257d
69	OP161SLC	0.5m	20m	1.6	20m	80m	40m		48		.85m$	20m	8				BC	A	PD257d
70	OP161SLD	0.5m	20m	1.6	20m	80m	40m		48		.28m$	20m	8				BC	A	PD257d
71	IRL81A(A)	500u△	20m	1.5 †	20m	200m	100m	5.0	4A%	883n	500u†	20m		44n		2.0u	EJ	♦	PD1399 ☑
72	SEP8505-001	500u$	20m	1.5	20m			3	48	935n			15			600n#	BC	A ♦	PD33b Ø
73	SEP8525-001	500u$	20m	1.5	20m			3	48	935n			15			600n#	BC	A ♦	PD33b Ø
74	K6500	500u	20m	1.6	20m	100m	40m	2.0	58	940n			10			700n#	BC	B	PD33g
75	MI31T	500u	20m	1.6	20m	75m	30m	3.0	58	940n			35		20m	50n	300n	BC	A	PD257
76	MI51T	500u	20m	1.6	20m	75m	50m	3.0	58	940n			50		20m	50n	300n	BC	A	PD258
77	MIC33T	0.5m	20m	1.6	20m		40m	2.0	48	940n							600n#	BC		PT31c
78	OP160	500u	20m	1.6	20m		40m	2.0	48	940n			16		20m	60n	600n#	BC	A	PD33g Ø
79	OSL1048	.50m	20m	1.6	20m	150m	50m	5.0	5A	940n			180			50n	600n#	XX	A	PD59
80	OSL1048S	.50m	20m	1.6	20m	150m	50m	5.0	5A	940n			180			50n	600n#	XX	B	PD58
81	TLN104	0.5m	20m	1.5	30m		40m	5.0	27	940n			40			50n		BC	A	PD331 Ø
82	TLN107	.50m	20m	1.3	10m		50m	5.0	28	940n			30		20m	50n		CB	A	PD494
83	XC944A	500u	20m	1.6	20m	100m	45m	3.0	48	940n			24			50n	300n#	BC	A	PD18C Ø
84	XC945A	500u	20m	1.6	20m	100m	45m	3.0	48	940n			50			50n	300n#	BC	A	PD18c Ø
85	GL410	500u	20m	1.4	20m	100m	65m	6.0	28	950n					5.0m	45n		BC	B	PD281 Ø
86	GL430	0.5m	20m	1.4	20m	75m	50m	6.0	28	950n			13					XX		None ☑
87	K6550	500u	40m	1.6	20m	100m	40m	2.0	58	940n			20				700n#	BC	B	PD574 Ø
88	ME1504	0.5m	50m				75m	3.0	49	880n			20		50m	45n		EC		PD1406 Ø
89	ME1514	0.5m	50m				75m	3.0	49	880n			20		50m	45n		EC		PD1407 Ø
90	CLED400	500u	50m	1.7	20m	60m	50m	3.0	4A%	930n	5.0m	50m	20				600n	BC	1	PT89b
91	TLN101	500u	50m	1.3	50m	150m	100m	5.0	3C	940n					50m	50n		BC	A	PD12j Ø
92	FED086L4DB	500u	100m	2.2	100m		150m	2.0	49	890n			0		100m	40n		CE	Z	PD952
93	LEA500	500u	100m	1.5	50m	150m	50m	5.0	XC§	900n							50n	XX		None
94	SE3450-012	500u$	100m	1.7	100m			3.0	5C	935n			90				600n#	BC	Y ♦	PD172 Ø
95	SE5450-012	500u$	100m	1.7	100m			3.0	5C	935n			20				600n#	BC	Y ♦	PD171c Ø
96	STLD2000-1	500u	100m	2.0	100m		100m	2.0	6A	935n			12				700n#	BC	E	PD96 Ø
97	C30122	500u	100m	1.3 †	100m		10		4C	940n							30n#	BC FO	A ☑	PD106 Ø
98	C86043E	500u♦	200m				100m	2	15	850n				35n			3n#	CE		PD1078
99	S86017E	500u	200m	2.5	200m				49	850n				50n			8n	XX		PD551
100	S86020E	500u	200m	2.5	200m				49	850n				50n			8n	XX		PD552
101	VTE3321	.51m△	20m	1.6	20m	50m	50m	3.0	48	940n	.51m	20m	30	60n			400n	BC	A	PD975
102	SEP8705-001	540u$	20m	1.7	20m		50m	3.0	48	880n			15				600n#	CE	A ♦	PD33b Ø
103	IRL60	550u†	50m	1.5	50m	75m	50m	3.0	5A%	900n			60			40n	1.0n	BC	A ♦	PD36b
104	STLD1600-3	550u	50m	1.5	50m		100m	6.0	6A	930n			24				700n#	BC	A	PD25a Ø
105	VTE7122	.56m△	20m	1.6	20m	50m	40m	3.0	48	940n	.56m	20m	30			60n	400n	BC		PD919
106	TLN108	0.6m	10m	1.4	50m	150m	100m	5.	3C	940n	4m†	10m	16		50m	50n		BC	♦	PD1106 Ø
107	OP297B	600u$	20m	1.7	20m	333m	1.0	5.0	4A	875n								CE	A	PD16ar
108	F5G1	600u△	20m	1.8	20m	100m	50m	6.0	5A	880n	600u	20m	35		20m	50n		BC	A	PD608
109	AL103B	600u	50m	1.6	50m		52m%		48									BC		PD236 Ø
110	LN191	600u†	50m	1.5	50m	200m	100m	2.0	46	1300n			5		50m	120n		EF	Z	TO-46

SYMBOLS AND CODES EXPLAINED IN INTERPRETER

3. INFRARED LED LAMPS (IREDs) - Po ≥0.1 mW (Cont'd)

IN ORDER OF: (1) POWER OUTPUT (2) IF TEST (3) PEAK WAVELENGTH & (4) TYPE NUMBER

LINE No.	4 TYPE NUMBER	1 MIN. POWER OUTPUT Po (W)	2 IF TEST (A)	VF MAX (V)	IF TEST (A)	MAX RATINGS @ 25°C PD (W)	IF (A)	VR (V)	TEMP RNG. CODE - +	3 PEAK WAVE-LENGTH λp (m)	MIN AXIAL INTENSITY Ie W/Sr	IF TEST (A)	BEAM ANGLE θHI (°)	IF TEST (A)	SPECTRAL BAND WIDTH Δλ (m)	RESP. TIME (s)	MAT. & FEATURE MAT	LEAD CODE	DRAWING
1	LN71	600u†	75m	1.2 †	75m	125m	75m	3.0	29	910n			6	75m	40n	40n	BC	B	PD7c Ø
2	AL106V	600u	100m	1.7	100m		120m		68								BC		PD238 Ø
3	TIES06	600u	500m	2.3	500m		500m	2.0	5C	910n			115	500m	25n		BC P-N	A	PD31
4	SE1470-002	650u$	20m	1.8	50m			3.0	5C	880n			24			600n#	CE	B ⊠	PD93a Ø
5	SE1470-002L	650u$	20m	1.8	50m			3.0	5C	880n			24			600n#	CE	B ⊠	PD93 Ø
6	SEP8706-003	650u	20m	1.7	20m	100m	60m	3	48	880n	1.1m	20m	50	20m		600n#	CE	A ♦	PT89 ⊠
7	VTE3122	700u†		1.5	20m	150m	50m	3.0	6C	940n	6.0m†		20	20m			BC	A	PD609
8	VTE3122L	700u†		1.5	20m	150m	50m	3.0	6C	940n	6.0m†		20	20m			BC	A	PD567
9	CQX18(A)	0.7m	20m	1.5	.02	0.1	.06	5.0	28	950n	.15m	.02	150	.05	50n	450n*	BC	A	TO-92
10	STLD1500-3	700u	50m	1.5	50m		100m	6.0	6A	930n			12			700n#	BC	B	PD93 Ø
11	SE1450-003	700u	50m	1.6	50m			3.0	5C	935n			24			700n#	BC	B ⊠	PD93a ⊠
12	SE1450-003L	700u	50m	1.6	50m		50m	3	5C	935n			24	10m	36n	0.6u#	BC	B ⊠	PD93 Ø
13	EL6SKLT	700u†Δ	50m	1.5	50m	100m	100m	5.0	4A	940n			24	50m	50n		BC	B ⊠	PD609 Ø
14	GS3040-3	.70m	50m	1.6	50m		100m	2.0	6C⊠	940n			12			700n#	BC		PT109
15	IRL80(A)	700uΔ	50m	1.7	100m	100m	50m	4.0	4A%	950n	700u	50m	40	50m	40n	2.0u	CEside	B	PD1141 ⊠
16	VTE3123	800u†		1.5	20m	150m	50m	3.0	6C	940n	8.0m†		20	20m			BC	A	PD609
17	VTE3123L	800u†		1.5	20m	150m	50m	3.0	6C	940n	8.0m†		20	20m			BC	A	PD567
18	SEP8506-004	800u$	20m	1.5	20m			3	48	935n			50			600n#	BC	A ♦	PT89 ⊠
19	OP223	0.8m	50m	1.7	50m	125m	50m	2.0	6C	880n			36	50m	50n	475n#	CE		PD570
20	ME7161	800u	50m	1.9	50m	75m	50m	3.0	5A	940n			10		50n	500n	BC		PD86 Ø
21	ME7021(2)	0.8m	100m	1.5	50m	150m	100m	2.0	37	1.34u	3.6m	50m	20	100m	140n	100n	EF		PD1405 Ø
22	ME7521	0.8m	100m	1.5	50m	150m	100m	2.0	37	1.34u	3.6m	50m	20	100m	140n	100n	EF		PD1408 Ø
23	ME7522	0.8m	100m				120m	2.0	37	1.34u			20	50m	130n	100n	EF		PD1408 Ø
24	ME7922	0.8m	100m				120m	2.0	37	1.34u			20	50m	130n	100n	EF		PD1042
25	VTE7123	.84mΔ	20m	1.6	20m	50m	40m	3.0	48	940n	.84m	20m	30		60n	400n	BC		PD919
26	MIC33TSC	.85m$	20m	1.6	20m		40m	2.0	48	940n						600n#	BC		PT31c
27	MFOE3100	850u	50m	2.0	50m	250m	80m	8.0	A %	805n					50n		AD/BC	AQ	PD1290
28	OP297A	900u$	20m	1.7	20m	333m	1.0	5.0	4A	875n							CE	A	PD16ar
29	SIRD8	0.9m	40m	1.5	40m	70m	40m	4.0		940n			50	40	50n		BC	A	PD118a Ø
30	TIES35	900u	50m	2.0	50m		200m	2.0	5A	910n			135	50m	30n		BC P-N	A	PD31 Ø
31	MFOE1200	900u	100m	2.5	100m	250m	150m		6C	815n		100m			50n		CEFO	Z	PD1051
32	ME7022(2)	1.0m	50m	1.5	50m	150m	100m	5.0	5A	900n	8.8m	50m	10	50m	50n	100n	XX	A	PD1405 Ø
33	CQY11B	50m	30m	1.3 †	30m	50m	30m	2.0	C §	880n	64u	20m			40n	30n#	BC	M	TO18 Ø

IRED LAMP, Po ≥ 1 mW

37	CLCLL208			1.7	20m	2.0m		4.0		880n						300n#	EJ		PD1423
38	CLCLL2011			1.5	20m	2.5m		4.0		940n						700n#	BC		PD1424
39	CLED305	750u	50m	1.5	60m		100m	3.0	5A	880n							CE		PD1411
40	MFOE3102	850u	50m	2.0	50m	250m	80m	8.0	A %	805n					50n		AD/BC	AQ	PD1290
41	VTE3124	1.0m†		1.5	20m	150m	50m	3.0	6C	940n	9.0m†		20	20m			BC	A	PD609
42	VTE3124L	1.0m†		1.5	20m	150m	50m	3.0	6C	940n	9.0m†		20	20m			BC	A	PD567
43	VTE3522	1.0m†		1.6	20m	100m	50m	3.0	4A	940n	750u†		40	20m			BC	A	PD1109
44	MII68520(A)	1.0m	20m	1.7	20m			4.0		880n							CE		PD1177
45	MII68521(A)	1.0m	20m	1.7	20m			4.0		880n							CE		PD1178
46	OP260	1.0m†	20m	1.8	20m	100m	50m	2.0	4A	880n	.10m	20m	16	20m	50n	575n#	CE		PD33g
47	OP260SLA	1.0m†	20m	1.8	20m	100m	50m	2.0	4A	880n	4.1m	20m	16	20m	50n	575n#	CE		PD33g
48	OP260SLB	1.0m†	20m	1.8	20m	100m	50m	2.0	4A	880n	2.6m	20m	16	20m	50n	575n#	CE		PD33g
49	OP260SLC	1.0m†	20m	1.8	20m	100m	50m	2.0	4A	880n	.52m	20m	16	20m	50n	575n#	CE		PD33g
50	XC10A	1.0m	20m	1.9	20m	100m	60m	3.0	48	880n			80		80n	1.5u	EC	B	PD338 Ø
51	XC880AE	1.0m	20m	1.7	20m	100m	60m	3.0	48	880n			24		80n	1.5u	EC	A	PD16x Ø
52	CQY58A1	1m	20m	1.5	20m	100m	50m	5.0	A §	930n	2.0m	20m	20	20m	50n	600n#		A	PD120e Ø
53	MII68500(A)	1.0m	20m	1.5	20m			3.0		930n							BC		PD1175
54	MII68502(A)	1.0m	20m	1.5	20m			3.0		930n							BC		PD1176
55	SEP8505-002	1.0m$	20m	1.5	20m			3	48	935n			15			600n#	BC	A ♦	PD33b Ø
56	SEP8525-002	1.0m$	20m	1.5	20m			3	48	935n			15			600n#	BC	A ♦	PD33b Ø
57	VTE3322	1.0mΔ	20m	1.6	20m	50m	50m	3.0	48	940n	1.0m	20m	30		60n	400n	BC	A	PD975
58	XC944B	1.0m	20m	1.6	20m	100m	45m	3.0	48	940n			24		50n	300n#	BC	A	PD18C Ø
59	XC945B	1.0m	20m	1.6	20m	100m	45m	3.0	48	940n			50		50n	300n#	BC	A	PD18c Ø
60	GL520	1.0m	20m	1.4	20m	120m	80m	6.0	28	950n			28				BC		PD280a
61	SE304(2)	1.0m	30m	1.4	30m	100m	50m	5.0	4A%	940n					60n		BC	B	PD262d
62	OP240	1.0m†	40m	1.8	20m	100m	50m	2.0	4A	880n	.14m	20m	40	20m	50n	550n#	CE		PD320
63	OP240SLA	1.0m†	40m	1.8	20m	100m	50m	2.0	4A	880n	1.6m	20m	40	20m	50n	550n#	CE		PD320
64	OP240SLB	1.0m†	40m	1.8	20m	100m	50m	2.0	4A	880n	1.1m	20m	40	20m	50n	550n#	CE		PD320
65	OP240SLC	1.0m†	40m	1.8	20m	100m	50m	2.0	4A	880n	.56m	20m	40	20m	50n	550n#	CE		PD320
66	SIRD7	1.0m	40m	1.6	60m	100m	60m	6.0		940n			45	60	50n		BC	A	PD608 ⊠
67	AL103A	1.0m	50m	1.6	50m		52m%		48								BC		PD236 Ø
68	SPX3033	1.0m	50m	1.5	50m	150m	100m	2.0	6F%				18			1.0u#	XX	A §	PD25 Ø
69	MFOE3200	1.0m	50m	2.2	50m	250m	100m		4A	805n		50m			50n	4.0n#	CEFO	AQ	PD1197
70	ME1303	1.0m	50m	1.6 †	50m		100m	3.0	49	875n	2.0m	20m	40	50m	45n		EC		PD515
71	ME1013	1.0m	50m	1.6 †	50m		75m	3.0	49⊠	880n	15m*			50m	45n		EC		PD513
72	MII62005-1	1.0m	50m	1.7	50m	125m		2.0	6C⊠	880n			18			500u	CE	B	PD25
73	MII62006-1(A)	1.0m	50m	1.7	50m	125m		2.0	6C⊠	880n			20			500u	CE	B	PD1174
74	MII62016-1(A)																		
75	MII62017-1(A)	1.0m	50m	1.7	50m	125m		2.0	6C⊠	880n			18				CE		PD1180
		1.0m	50m	1.7	50m	125m		2.0	6C⊠	880n			18				CE		PD93
76	OP124	1.0m	50m	1.5	50m		100m	2.0	6C	930n	1.0m$	50m	18	50m	50n	700n#	BC	A	PD25f Ø
77	STLD1700-3	1.0m	50m	1.5	50m		100m	6.0	6A	930n			18			700n#	BC	A	PD25b Ø
78	SE1450-004	1.0m	50m	1.6	50m			3.0	5C	935n			24			700n#	BC	B ⊠	PD93a ⊠
79	SE1450-004L	1.0m	50m	1.6	50m		50m	3	5C	935n			24	10m	36n	0.6u#	BC	B ⊠	PD93 Ø
80	GS1140-3	1.0m	50m	1.6	50m		100m	2.0	6C⊠	940n			18			0.7u	BC		PT6h
81	SE302A	1.0m	50m	1.4	50m	75m	50m	3.0	X8§	940n			16	50m	60n	1.0u	BC	A	PD256 Ø
82	SIRD5	1.0m	50m	1.5	50m	100m	100m	6.0	69	940n			20	50	50n		BC	A	PD570
83	SE3352X04	1.0m	100m	2.0	100m		150m	1.0	5C⊠	820n			32		35n	20n*	CE FO	Z	PD22h
84	1A148	1.0m	100m	2.2	100m	.22	100m	1.0	5C	880n					50n	12n	CE		PD1018
85	1A137	1.0m	100m	2.2	100m	.22	100m	1.0	5C	920n					50n	12n	CE		PD1018
86	SE3450-013	1.0m$	100m	1.7	100m			3.0	5C	935n			90			600n#	BC	Y ♦	PD172 Ø
87	SE5450-013	1.0m$	100m	1.7	100m			3.0	5C	935n			20			600n#	BC	Y ♦	PD171c Ø
88	STLD1800-1	1.0m	100m	2.0	100m		100m	2.0	6A	935n			90			700n#	BC	E	PD95 Ø
89	STLD1900-1	1.0m	100m	2.0	100m		100m	2.0	6A	935n			90			700n#	BC	E	PD95 Ø
90	STLD2000-2	1.0m	100m	1.7	100m		100m	6.0	6A	935n			12			700n#	BC	E	PD96 Ø
91	STLD2100-1	1.0m	100m	2.0	100m		100m	2.0	6A	935n			16			700n#	BC	E	PD96 Ø
92	K6251	1.0m	100m	1.7	100m	200m	100m	2.0	58	940n			10			700n#	BC	B	PD7
93	NSC055FA	1.0m	100m	1.7	100m	250m	150m	3.0	6C	940n			10		50n	300n#	BC	B	PD169j Ø
94	NSC55PA	1.0m	100m	1.7	100m	250m	150m	3.0	6C	940n			65		50n	300n#	XX	B	PD7r Ø
95	SE5453-1	1.0m	100m	1.5	100m	1.3	30	2.0	6C	940n			20			1.0u#	BC	E	PD96 Ø
96	VTE1015	1.0m	100m	1.7	100m	200m	100m	3.0	5F	940n			70		60n	400n	BC		PD8s
97	VTE1115	1.0m	100m	1.7	100m	200m	100m	3.0	5F	940n			20		60n	400n	BC		PD7r
98	XC55FLCA	1.0m	100m	1.7	100m	250m	150m	3.0	6C	940n			65		50n	300n#	BC	B ⊠	PD8x Ø
99	XC55PLCA	1.0m	100m	1.7	100m	250m	150m	3.0	6C	940n			20		50n	300n#	BC	B ⊠	PD7z
100	SFH401-II	1.0m	100m	1.7	100m	470m	300m	4.0	6A	950n	10m	100m	30	100m	20n	1.0u	CB	A	PD7e Ø
101	SFH402-II	1.0m	100m	1.2	100m	470m	300m	4.0	6A	950n	2.5m	100m	80	100m	20n	1.0u	CB	A	PD8g Ø
102	SFH402-III	1.0m	100m	1.7	100m	470m%	300m	4.0	6A	950n	4.0m	100m	80	100m	40n	1.0u	CB	A	PD8g Ø
103	SE1470-003	1.1m$	20m	1.8	50m			3.0	5C	880n			24			600n#	CE	B ⊠	PD93a Ø
104	SE1470-003L	1.1m$	20m	1.8	50m			3.0	5C	880n			24			600n#	CE	B ⊠	PD93 Ø
105	VTE7124	1.1mΔ	20m	1.6	20m	50m	40m	3.0	48	940n	1.1m	20m	30		60n	400n	BC		PD919
106	VTE3523	1.2m†		1.6	20m	100m	50m	3.0	4A	940n	1.0m†		40	20m			BC	A	PD1109
107	TLN109	1.3m	10m	1.4	20m	50m	40m	5.	28	930n	1.5 †	10m	60	10m	45n		BC	♦	PD478

SYMBOLS AND CODES EXPLAINED IN INTERPRETER

3. INFRARED LED LAMPS (IREDs) - Po ≥1 mW (Cont'd)

IN ORDER OF: (1) POWER OUTPUT (2) IF TEST (3) PEAK WAVELENGTH & (4) TYPE NUMBER

LINE No.	4 TYPE NUMBER	1 MIN. POWER OUTPUT Po (W)	2 IF TEST (A)	VF MAX (V)	IF TEST (A)	MAX RATINGS @ 25°C PD (W)	IF (A)	VR (V)	TEMP RNG. CODE - +	3 PEAK WAVE-LENGTH λp (m)	MIN AXIAL INTENSITY Ie W/Sr	IF TEST (A)	BEAM ANGLE θHI (°)	IF TEST (A)	SPECTRAL BAND WIDTH Δλ (m)	RESP. TIME (s)	MAT. & FEATURE MAT	LEAD CODE	DRAWING
1	MLED15	1.3m	30m	1.5	30m	50m	30m	6.0	4A§	930n					48n	400n	BC	A	PD1023
2	GS3040-4	1.3m	50m	1.6	50m		100m	2.0	6C⊠	940n			12			700n#	BC		PT109
3	STLD1800-2	1.3m	100m	1.7	100m		100m	6.0	6A	935n			90			700n#	BC	E	PD95 Ø
4	SEP8705-002	1.4m$	20m	1.7	20m		50m	3.0	48	880n			15			600n#	CE	A ♦	PD33b Ø
5	MIC33TSB	1.4m$	20m	1.6	20m		40m	2.0	48	940n						600n#	BC		PT31c
6	GL350	1.4m	40m	1.4	40m	90m	60m	3.0	2A	950n			60	40m	45n		BC	B	PD118b Ø
7	STLD1500-4	1.4m	50m	1.5	50m		100m	6.0	6A	930n			12			700n#	BC	B	PD93 Ø
8	GL513F	1.4m	100m	1.6	100m	250m	150m	6.0	4C	950n			100	100m	45n		BC	B	PD7m Ø
9	VTE3524	1.5m†		1.6	20m	100m	50m	3.0	4A	940n	1.2m†		40	20m			BC	A	PD1109
10	IRL81(A)	1.5m	20m	2.0	20m	200m	100m	5.0	4A%	883n	4.5m	50m	40	50m	80n	600n	CEside	B	PD1141 ⊠
11	VTE7321	1.5m†	20m	1.5	20m	100m	50m	3.0	4A	940n	300u	20m	60			1.0u*	XX	A	PD608c
12	VTE7322	1.5m†	20m	1.5	20m	100m	50m	3.0	4A	940n	300u	20m	60			1.0u*	XX	A	PD608c
13	VTE7324	1.5m†	20m	1.5	20m	100m	50m	3.0	4A	940n	300u	20m	60			1.0u*	XX	A	PD608c
14	XC944C	1.5m	20m	1.6	20m	100m	45m	3.0	48	940n			24		50n	300n#	BC	A	PD18c Ø
15	XC945C	1.5m	20m	1.6	20m	100m	45m	3.0	48	940n			50		50n	300n#	BC	A	PD18c Ø
16	SIRAD2	1.5m	40m	1.9	40m	70m	40m	5.0	28	890n			20	40m	50n		CE	A	PD18f
17	EL7L	1.5m	40m	1.5	40m	70m	40m	4.0		940n			15	40	50n		BC	A	None
18	SIRD9	1.5m	40m	1.5	40m	70m	40m	4.0		940n			15	40	50n		BC	A	PD16t Ø
19	SE2460-4	1.5m	50m	1.5	50m		120m	6.0	6A	930n			18			700n#	BC	A	PD25b Ø
20	STLD1700-4	1.5m	50m	1.5	50m		100m	6.0	6A	930n			18			700n#	BC	A	PD25b Ø
21	EL6SKL	1.5m†Δ	50m	1.5	50m	100m	100m	5.0	4A	940n			36	50m	50n		BC	B ⊠	PD25h Ø
22	GS1140-4	1.5m	50m	1.6	50m		100m	2.0	6C⊠	940n			18			0.7u	BC		PT6h
23	LN162S	1.5m	50m	1.5	50m	75m	50m	3.0	28	950n			8	50m	50n		BC	A	PD118d
24	MFOE1201	1.5m	100m	2.2	100m	250m	150m	4.0	6C	815n					50n		CE	Z	TO-52
25	SE5470-002	1.5m$	100m	1.9	100m			3	5C	880n			20			600n#	CE	Y ♦	PD171c Ø
26	SE3450-014	1.5m$	100m	1.7	100m			3.0	5C	935n			90			600n#	BC	Y ♦	PD172 Ø
27	SE5450-014	1.5m$	100m	1.7	100m			3.0	5C	935n			20			600n#	BC	Y ♦	PD171c Ø
28	1A48B	1.5m†	100m	1.8	100m	180m	100m	7.0	5C§	940n	25m†	100m	4.0		60n	500n	BC	E Ø	TO-18
29	CQX16	1.5m	100m	1.7	100m	1.3	100m	3.0	6F§	940n			80		60n	300n#	BC		PD7q
30	CQX17	1.5m	100m	1.7	100m	1.3	100m	3.0	6F§	940n			80		60n	300n#	BC		PD8m
31	LED56	1.5m	100m	1.7	100m	1.3	100m	3.0	6F§	940n					60n	300n#	BC	E Ø	PD171 Ø
32	LED56F	1.5m	100m	1.7	100m	1.3	100m	3.0	6F§	940n					60n	300n#	BC	E Ø	PD8m
33	SE1470-004	1.6m$	20m	1.8	50m			3.0	5C	880n			24			600n#	CE	B ⊠	PD93a Ø
34	SE1470-004L	1.6m$	20m	1.8	50m			3.0	5C	880n			24			600n#	CE	B ⊠	PD93 Ø
35	VTE3323	1.6mΔ	20m	1.6	20m	50m	50m	3.0	48	940n	1.6m	20m	30		60n	400n	BC	A	PD975
36	MFOE3101	1.6m	50m	2.0	50m	250m	80m	8.0	A %	805n					50n		AD/BC	AQ	PD1290
37	SIRD1	1.6m	50m	1.5	50m	170m	100m	6.0		940n			60	50	50n		BC	A	TO-18 Ø
38	IRL402-1	1.6mΔ	100m	1.7	100m	470m	300m	4.0	5A%	965n	1.6m	100m	40	100m			BC	♦	TO-18 Ø
39	SE2470-001	1.7mΔ	50m	1.8	50m			3	5C	880n			18			600n#	CE	A §	PD25f Ø
40	MLED77	1.7m	100m	2.0	100m	200m	150m	6.0	4A	850n						35n	CE	A	PD1024
41	STLD1800-3	1.7m	100m	1.7	100m		100m	6.0	6A	935n			90			700n#	BC	E	PD95 Ø
42	OP292C	1.8m$	20m	1.7	20m	333m	1.0	5.0	4A	875n							CE	A	PD16ar
43	EL1CL3	1.8m†Δ	40m	1.5	40m	80m	60m	4.0	27	980n			106	40m	50n	800n	BC	A	PT47c Ø
44	MFOE3201	1.8m	50m	2.2	50m	250m	100m		4A	805n		50m			50n	4.0n#	CEFO	AQ	PD1197
45	LN59	1.8m	50m	1.5	50m	75m	50m	3.0	28	940n				20m	50n		BC	A	PD1071
46	SEP8790-301	1.8m$	100m	1.7	20m			3.0	48	880n			20			600n#	CE	♦	PT149 Ø
47	SE5453-2	1.9m	100m	1.5	100m	1.3	30	2.0	6C	940n			20			1.0u#	BC	E	PD96 Ø
48	CQL13C	2.0m♦					250m	30	5A%	880n					10n		XX		PD1025
49	XC10B	2.0m	20m	1.9	20m	100m	60m	3.0	48	880n			80		80n	1.5u	EC	B	PD338 Ø
50	XC880BE	2.0m	20m	1.7	20m	100m	60m	3.0	48	880n			24		80n	1.5u	EC	A	PD16x Ø
51	XC1288B	2.0m	20m	1.9	20m	75m	45m	3.0	48	880n			45		80n	1.5u	EC	A	PD16aj
52	SEP8505-003	2.0m$	20m	1.5	20m			3	48	935n			15			600n#	BC	A ♦	PD33b Ø
53	EL45F	2.0m†Δ	20m	1.6	50m	75m	50m	5.0	28	940n				50m	50n		BC	A	PD1071 Ø
54	MIC33TSA	2.0m$	20m	1.6	20m		40m	2.0	48	940n						600n#	BC		PT31c
55	XC944D	2.0m	20m	1.6	20m	100m	45m	3.0	48	940n			24		50n	300n#	BC	A	PD18c Ø
56	XC945D	2.0m	20m	1.6	20m	100m	45m	3.0	48	940n			50		50n	300n#	BC	A	PD18c Ø
57	L2347-01	2.0m	50m	1.5	50m	120m	70m	3.0	38	880n			10		60n	50n	IR	♦	PD1152
58	OPC116	2.0m	50m	1.5 †	50m			3.0		930n							BC	B §	PD206 *
59	OPC123	2.0m	50m	1.5 †	50m			3.0		930n							BC	B §	PD206 *
60	EL23F	2.0m†Δ	60m	1.6	60m	100m	60m	5.0	2A	940n			64	60m	50n		BC	A	PD Ø
61	TL38-4	2.0m†	100m	1.8	100m	400m	500m	-3		820n						20n	XX	A	TO-5
62	OP296C	2.0m$	100m	2.0	100m	333m	2.0	2.0	4A	875n							CE	A	PD16ar
63	OP298C	2.0m$	100m	2.0	100m	333m	150m	2.0	4A	875n			25				CE	A	PD1237
64	SE5455-001	2.0m	100m	1.7	100m			3.0	5C	935n			20			600n#	BC	B ♦	PD7a Ø
65	STLD1900-2	2.0m	100m	1.7	100m		100m	6.0	6A	935n			90			700n#	BC	E	PD95 Ø
66	STLD2100-2	2.0m	100m	1.7	100m		100m	6.0	6A	935n			16			700n#	BC	E	PD96 Ø
67	GS5040-1	2.0m	100m	1.7	100m		200m	2.0	48⊠	940n			20			0.7u	BC	B	PD1174
68	SG1009	2.0m	100m	1.4 †	100m		100m	2.0	4C⊠	940n			8.0		50n	900n#	BC	A ⊠	PD106 Ø
69	SG1009F	2.0m	100m	1.4 †	100m		100m		4C⊠	940n						900n#	BC	A ⊠	PD106a Ø
70	SG1010	2.0m	100m	1.3 †	100m		100m		4C⊠	940n						900n#	BC	A ⊠	PD106 Ø
71	SG1010F	2.0m	100m	1.3 †	100m		100m		4C⊠	940n						900n#	BC	A ⊠	PD106a Ø
72	VTE3324	2.1mΔ	20m	1.6	20m	50m	50m	3.0	48	940n	2.1m	20m	30		60n	400n	BC	A	PD975
73	L2347-02	2.1m	50m	1.5	50m	120m	70m	3.0	38	880n			50		60n	50n	IR	A	PD8z Ø
74	1A48C	2.1m†	100m	1.8	100m	180m	100m	7.0	5C§	940n	32m†	100m	4.0		60n	500n	BC	E Ø	TO-18
75	STLD2000-3	2.2m	100m	1.7	100m		100m	6.0	6A	935n			12			700n#	BC	E	PD96 Ø
76	SIRD4	2.2m	100m	1.7	100m	200m	100m	6.0		940n			60	50	50n		BC	A	TO-18 Ø
77	MFOE1202	2.4m	100m	2.2	100m	250m	150m	4.0	6C	815n					50n		CE	Z	TO-52
78	SEP8790-302	2.4m$	100m	1.7	20m			3.0	48	880n			20			600n#	CE	♦	PT149 Ø
79	OP292B	2.5m$	20m	1.7	20m	333m	1.0	5.0	4A	875n							CE	A	PD16ar
80	LN68	2.5m	50m	1.5	50m	75m	50m	3.0	28	940n			20	50m	50n		BC	A	PD322b
81	MLED71	2.5m	50m	1.8	50m	150m	50m	6.0	4A§	940n						1.0u	BC	B	PD1024
82	LN54	2.5m	50m	1.5	50m	75m	50m	3.0	28	950n			17	50m	50n		BC Side	B	PD915
83	FED081X	2.5m	100m	2.3	100m		150m	2.0	49	865n▼				100m	60n		CE	Z	PD42p
84	NSC55FB	2.5m	100m	1.7	100m	250m	150m	3.0	6C	940n			10		50n	300n#	BC	B	PD169j Ø
85	NSC55PB	2.5m	100m	1.7	100m	250m	150m	3.0	6C	940n			10		50n	300n#	XX	B	PD7r Ø
86	SE5453-3	2.5m	100m	1.5	100m	1.3	30	2.0	6C	940n			20			1.0u#	BC	E	PD96 Ø
87	SIRD2	2.5m	100m	1.7	100m	200m	100m	6.0		940n			10	50	50n		BC	A	TO-18 Ø
88	XC55FLCB	2.5m	100m	1.7	100m	250m	150m	3.0	6C	940n			65		50n	300n#	BC	B ⊠	PD8x Ø
89	XC55PLCB	2.5m	100m	1.7	100m	250m	150m	3.0	6C	940n			20		50n	300n#	BC	B ⊠	PD7z
90	MFOE1100	2.6m	100m	2.2	100m	250m	150m	8.0	C	815n							AD/BC	Z	PD1287
91	SE5470-003	2.6m$	100m	1.9	100m			3	5C	880n			20			600n#	CE	Y ♦	PD171c ⊠
92	SEP8705-003	2.7m$	20m	1.7	20m		50m	3.0	48	880n			15			600n#	CE	A ♦	PD33b Ø
93	SEP8505-004	2.7m$	20m	1.5	20m			3	48	935n			15			600n#	BC	A ♦	PD33b Ø
94	EL1ML2	2.7m†Δ	50m	1.5	50m	170m	100m	5.0	2A	940n			64	50m	50n	800n	BC	A §	PT138 Ø
95	OP298A	2.8m$	100m	2.0	100m	333m	150m	2.0	4A	875n			25				CE	A	PD1237
96	OP298B	2.8m$	100m	2.0	100m	333m	150m	2.0	4A	875n			25				CE	A	PD1237
97	SFH407-2	3.0m†		1.6	30m		100m	2.0	48%	900n	630u				40n	50n	BC		PD580 Ø
98	VTE1211W	3.0m		1.7	100m	170m	150m	3.0	4A	940n	5.0m†		50	100m			BC	A	PD18e
99	XC10C	3.0m	20m	1.9	20m	100m	60m	3.0	48	880n			80		80n	1.5u	EC	B	PD338 Ø
100	CQY58A2	3m†	20m	1.5	20m	100m	50m	5.0	A §	930n	2.0m	20m	20	20m	50n	600n#		A	PD120e Ø
101	K6552	3.0m	40m	1.6	20m		40m						20			700n#	BC	B	PD574 Ø
102	SIRAD3	3.0m	40m	1.5	40m	70m	40m	4.0	28	890n			60	40m	50n		CE	B	PD118a
103	CEN2020	3.0m†	40m	1.2	40m	70m	40m	4.0	26	940n			50		50n		BC	A	PT47d
104	EL1CL3H	3.0m†Δ	40m	1.5	40m	80m	60m	4.0	27	940n			28	40m	50n		BC	A	PD118g
105	CLED155	3m	50m	1.8	50m	165m	100m	3	5C	880n			20		50n		CE		PD8s
106	CLED155F	3m	50m	1.8	50m	165m	100m	3	5C	880n			20		50n		CE		PD8s
107	CLED405	3m	50m	1.7	40m	100m	60m	3	5A	880n							CE		PT89b
108	OP224	3.0m	50m	1.7	50m	125m	50m	2.0	6C	880n			36	50m	50n	475n#	CE		PD570
109	CQY49C	3m	50m	1.5	50m	150m	100m	5.0	C §	930n	300u	50m	15		50n	600n#	BC	E	TO18 Ø
110	LN155	3.0m	50m	1.6	100m	160m	100m	3.0	28	940n			80	50m	50n		BC	A	PD1068

SYMBOLS AND CODES EXPLAINED IN INTERPRETER

3. INFRARED LED LAMPS (IREDs) - Po ≥1 mW (Cont'd)

IN ORDER OF: (1) POWER OUTPUT (2) IF TEST (3) PEAK WAVELENGTH & (4) TYPE NUMBER

LINE No.	4 TYPE NUMBER	1 MIN. POWER OUTPUT Po (W)	2 IF TEST (A)	VF MAX (V)	IF TEST (A)	MAX RATINGS @ 25°C PD (W)	IF (A)	VR (V)	TEMP RNG. CODE - +	3 PEAK WAVE-LENGTH λp (m)	MIN AXIAL INTENSITY Ie W/Sr	IF TEST (A)	BEAM ANGLE θHI (°)	IF TEST (A)	SPECTRAL BAND WIDTH Δλ (m)	RESP. TIME (s)	MAT. & FEATURE MAT	LEAD CODE	DRAWING
1	ME7121	3.0m†	50m	1.8	50m	150m	100m	3.0	5A	940n	10m†	50m	15	50m	50n	500n	XX	B	PD85 Ø
2	ME7124	3.0m†	50m	1.8	50m	150m	100m	3.0	5A	940n	243m†	50m	4.0	50m	50n	500n	XX	B	PD85c Ø
3	SE301A	3.0m	50m	1.4	50m	150m	100m	5.0	6C%	940n			20	50m	60n	1.0u	BC	B	PD7b
4	SE303A	3.0m	50m	1.4	50m	150m	100m	5.0	X8§	940n			54	50m	60n	1.0u#	BC	A	PD1239c
5	LN57	3.0m	50m	1.5	50m	75m	50m	3.0	28	950n			18	50m	50n		BC	B	PD914
6	LN66L	3.0m	50m	1.6	50m	160m	100m	3.0	28	950n			25	50m	50n		BC	B	PD280f
7	LN66NC	3.0m	50m	1.6	100m	160m	100m	3.0	28	950n			25	50m	50n		BC	B	PD280f
8	CLED1	3.0m	80m	1.8	60m	1.3	1.0	3	5A	930n			35		25n		BC	B	PD7r
9	CLED1F	3.0m	80m	1.8	60m	1.3	1.0	3	5A	930n			17		25n		BC	B	PD7r
10	MFOE200	3.0m†	100m	1.7	100m	400m	200m	3.0	5C§	810n	9.0m	50m	24			250n	FO	A	PD7g
11	OP296B	3.0m$	100m	2.0	100m	333m	2.0	2.0	4A	875n							CE	A	PD16ar
12	LN182	3.0m	100m	20	100m	200m	100m	3.0	28	880n			20	100m	50n		CE	A	PD8
13	OTL302	3.0m	100m	1.8	100m	180m	100m	3.0	6E§	880n			12		80n	1.5u	CE		PT153 Ø
14	OTL302L	3.0m	100m	1.8	100m	180m	100m	3.0	6E§	880n			12		80n	1.5u	CE		PT154 Ø
15	SEP8790-303	3.0m$	100m	1.7	20m			3.0	48	880n			20			600n#	CE	♦	PT149 Ø
16	SFH407II	3.0m	100m	1.2	30m		50m	2.0	48%	900n	.63m	100m			40n	50n	BC		PD580 Ø
17	K6200	3.0m	100m	1.7	100m	200m	100m	2.0	58	940n			25			700n#	BC	B	PD8v
18	K6250	3.0m	100m	1.7	100m	200m	100m	2.0	58	940n			10			700n#	BC	B	PD7
19	OP131(A)	3.0m	100m	1.7	100m	200m	10	2.0	5F	940n			20	100m	60n	600n#	BC	B	PD7s
20	OP131W	3.0m	100m	1.7	100m	200m	10	2.0	5F	940n			64	100m	60n	600n#	BC	B	PD8k Ø
21	VTE1016	3.0m	100m	1.7	100m	200m	100m	3.0	5F	940n			70		60n	400n	BC		PD8s
22	VTE1116	3.0m	100m	1.7	100m	200m	100m	3.0	5F	940n			20		60n	400n	BC		PD7r
23	LN161	3.0m	100m	1.6	100m	160m	100m	3.0	2C	950n			8	100m	50n		BC	A	PD7c
24	XC880CE	3.2m	20m	1.7	20m	100m	60m	3.0	48	880n			24		80n	1.5u	EC	A	PD16x Ø
25	NSC55FC	3.3m	100m	1.7	100m	250m	150m	3.0	6C	940n			10		50n	300n#	XX	B	PD169j Ø
26	NSC55PC	3.3m	100m	1.7	100m	250m	150m	3.0	6C	940n			10		50n	300n#	XX	B	PD7r Ø
27	GL514	3.3m	100m	1.6	100m	250m	150m	6.0	4C	950n			10	100m	45n		BC	B	PD12w Ø
28	E1510	3.5m		2.5	1.0		100m			940n						100n	XX		TO-18
29	E1510F	3.5m		2.5	1.0		100m			940n						100n	XX		PD78
30	CLED155A	3.5m	50m	1.8	50m	165m	100m	3	5C	880n			20		50n		CE		PD8s
31	CLED155FA	3.5m	50m	1.8	50m	165m	100m	3	5C	880n			20		50n		CE		PD8s
32	SIRD6	3.5m	50m	1.5	50m	100m	100m	6.0	69	940n			15	50m	50n		BC	A	PD609 Ø
33	LN55	3.5m†	50m	1.5	50m	75m	50m	3.0	28	950n			55	50m	50n		BC	B	PD212
34	LN58	3.5m	50m	1.5	50m	75m	50m	3.0	28	950n			35	50m	50n		BC	B	PD915
35	LN62S	3.5m†	50m	1.2 †	50m	75m	50m	3.0	28	950n				50m	50n		BC	A	PD118d
36	LN64	3.5m	50m	1.6	100m	160m	100m	3.0	28	950n			45	50m	50n		BC	B	PD1066
37	SE5470-004	3.5m$	100m	1.9	100m			3	5C	880n			20			600n#	CE	Y ♦	PD171c Ø
38	SE5455-002	3.5m	100m	1.7	100m			3.0	5C	935n			20			600n#	BC	B ♦	PD7a Ø
39	STLD2100-3	3.5m	100m	1.7	100m		100m	6.0	6A	935n			16			700n#	BC	E	PD96 Ø
40	GS5040-2	3.5m	100m	1.7	100m		200m	2.0	48Ø	940n			20			0.7u	BC	B	PD1174
41	LED55B	3.5m	100m	1.7	100m	1.3	100m	3.0	6F§	940n					60n	300n#	BC	E Ø	PD171 Ø
42	LED55BF	3.5m	100m	1.7	100m	1.3	100m	3.0	6F§	940n					60n	300n#	BC	E Ø	PD8m
43	LN52	3.5m	100m	1.6	100m	150m	100m	3.0	28	950n			100	100m	50n	1.0u#	BC	B	PD12g Ø
44	SEP8705-004	3.8m$	20m	1.7	20m		50m	3.0	48	880n			15			600n#	CE	A ♦	PD33b Ø
45	SE5453-4	3.8m	100m	1.5	100m	1.3	30	2.0	6C	940n			20			1.0u#	BC	E	PD96 Ø
46	K6502	4.0m	20m	1.6	20m		40m						10			700n#	BC	B	PD33g
47	XC10D	4.0m	20m	1.9	20m	100m	60m	3.0	48	880n			80		80n	1.5u	EC	B	PD338 Ø
48	SLR902A	4.0m†	30m	1.2 †	30m	90m	50m	5.0	2A	945								A	PD1061
49	MII62005-2	4.0m	50m	1.7	50m	125m		2.0	6CØ	880n			18			500u	CE	B	PD25
50	MII62016-2(A)	4.0m	50m	1.7	50m	125m		2.0	6CØ	880n			18				CE		PD1180
51	MII62017-2(A)	4.0m	50m	1.7	50m	125m		2.0	6CØ	880n			18				CE		PD93
52	SLR921A	4.0m†	50m	1.3 †	50m	150m	100m	5.0	28	945								A	PD8aa
53	SLR922A	4.0m†	50m	1.3 †	50m	150m	100m	5.0	28	945								A	PD1152
54	K6202	4.0m	100m	1.7	100m	200m	100m						25			700n#	BC	B	PD8v
55	K6252	4.0m	100m	1.7	100m		100m						10			700n#	BC	B	PD7
56	MFOE1101	4.0m	100m	2.2	100m	250m	150m	8.0	C	815n							AD/BC	Z	PD1287
57	OP296A	4.0m$	100m	2.0	100m	333m	2.0	2.0	4A	875n							CE	A	PD16ar
58	STLD1900-3	4.0m	100m	1.7	100m		100m	6.0	6A	935n			90			700n#	BC	E	PD95 Ø
59	1A104	4.0m	100m	1.8	100m	180m	100m	7.0	48§	940n			20		60n	600n#	BC	E	TO-46
60	EL1K3	4.0m†Δ	100m	1.7	100m	200m	100m	5.0	4A	940n			72	100m	50n	800n	BC	A §	PT137 Ø
61	OP132(A)	4.0m	100m	1.7	100m	200m	10	2.0	5F	940n			20	100m	60n	600n#	BC	B	PD7s
62	OP132W	4.0m	100m	1.7	100m	200m	10	2.0	5F	940n			64	100m	60n	600n#	BC	B	PD8k Ø
63	SG1009A	4.0m	100m	1.4 †	100m		100m	2.0	4CØ	940n			8.0		50n	900n#	BC	A Ø	PD106
64	SG1009AF	4.0m	100m	1.4 †	100m		100m		4CØ	940n						900n#	BC	A Ø	PD106a Ø
65	SG1010A	4.0m	100m	1.3 †	100m		100m		4CØ	940n						900n#	BC	A Ø	PD106 Ø
66	SG1010AF	4.0m	100m	1.3 †	100m		100m		4CØ	940n						900n#	BC	A Ø	PD106a Ø
67	SIRD3	4.0m	100m	1.7	100m	200m	100m	6.0		940n			10	50m	50n		BC	A	TO-18 Ø
68	VTE1017	4.0m	100m	1.7	100m	200m	100m	3.0	5F	940n			70		60n	400n	BC		PD8s
69	VTE1117	4.0m	100m	1.7	100m	200m	100m	3.0	5F	940n			20		60n	400n	BC		PD7r
70	XC55FLCC	4.0m	100m	1.7	100m	250m	150m	3.0	6C	940n			65		50n	300n#	BC	B Ø	PD8x Ø
71	XC55PLCC	4.0m	100m	1.7	100m	250m	150m	3.0	6C	940n			20		50n	300n#	BC	B Ø	PD7z
72	LN151F	4.0m	100m	1.6	100m	160m	100m	3.0	2A	950n			32	100m	50n		BC	B	PD8d
73	LN151L	4.0m	100m	1.6	100m	160m	100m	3.0	2A	950n			8	100m	50n		BC	B	PD7c
74	IRL402-2	4.0mΔ	100m	1.7	100m	470m	300m	4.0	5A%	965n	4.0m	100m	40	100m			BC	♦	TO-18 Ø
75	CLED155B	4.5m	50m	1.8	50m	165m	100m	3	5C	880n			20		50n		CE		PD8s
76	CLED155FB	4.5m	50m	1.8	50m	165m	100m	3	5C	880n			20		50n		CE		PD8s
77	L2347(2)	4.5m	50m	1.5	50m	120m	70m	3.0	38	880n			80		60n	50n	IR	♦	PD299a Ø
78	SFH407-3	4.7m†		1.6	30m		100m	2.0	48%	900n	1.0m				40n	50n	BC		PD580 Ø
79	SFH407III	4.7m	100m	1.2	30m		50m	2.0	48%	900n	1.0m	100m			40n	50n	BC		PD580 Ø
80	SE5455-003	4.8m	100m	1.7	100m			3.0	5C	935n			20			600n#	BC	B ♦	PD7a Ø
81	GS5040-3	4.8m	100m	1.7	100m		200m	2.0	48Ø	940n			20			0.7u	BC	B	PD1174
82	CQX48	5m	50m	1.6	50m	100m	60m	6.0	A §	950n	3m	50m			100n	450n*	BC	♦	PD608b Ø
83	CQY36N	5.0m	50m	1.6	50m	.17	100m	5.0	2A	950n	0.7m	.05	80	.05	50n	450n*	BC	A	PD625
84	CQY37N	5.0m	50m	1.6	50m	.17	100m	5.0	2A	950n	2.2m	.05	25	.05	50n	450n*	BC	A	PD394
85	LD261-4	5.0m†	50m			85m%	50m	5.0	48%	950n	2.0m	50m	60	100m	55n		BC	A	PD146a
86	LN166	5.0m	50m	1.6	100m	160m	100m	3.0	28	950n			20	50m	50n		BC	B	PD280f
87	K6203	5.0m	100m	1.7	100m		100m						25			700n#	BC	B	PD8v
88	K6253	5.0m	100m	1.7	100m		100m						10			700n#	BC	B	PD7
89	MFOE1102	5.0m	100m	2.2	100m	250m	150m	8.0	C	815n							AD/BC	Z	PD1287
90	IRE160	5.0m	100m	2.2 †	100m		150m%	3.0 %	48	820n					40n	14n#	FO	A	PD356
91	LN181	5.0m†	100m	2.1	100m	200m	100m	3.0	28	880n			10	100m	45n		CE	Z	TO-46
92	CEN2040	5.0m†	100m	1.4	100m	100m	100m	5.0	37	940n			25		50n		BC	A	PD1162
93	NSC55FD	5.0m	100m	1.7	100m	250m	150m	3.0	6C	940n			65		50n	300n#	BC	B	PD169j Ø
94	NSC55PD	5.0m	100m	1.7	100m	250m	150m	3.0	6C	940n			15		50n	300n#	BC	B	PD7r Ø
95	OP133(A)	5.0m	100m	1.7	100m	200m	10	2.0	5F	940n			20	100m	60n	600n#	BC	B	PD7s
96	OP133W	5.0m	100m	1.7	100m	200m	10	2.0	5F	940n			64	100m	60n	600n#	BC	B	PD8k Ø
97	VTE1018	5.0m	100m	1.7	100m	200m	100m	3.0	5F	940n			70		60n	400n	BC		PD8s
98	VTE1118	5.0m	100m	1.7	100m	200m	100m	3.0	5F	940n			20		60n	400n	BC		PD7r
99	XC55FLCD	5.0m	100m	1.7	100m	250m	150m	3.0	6C	940n			65		50n	300n#	BC	B Ø	PD8x Ø
100	XC55PLCD	5.0m	100m	1.7	100m	250m	150m	3.0	6C	940n			20		50n	300n#	BC	B Ø	PD7z
101	LN152	5.0m	100m	1.6	100m	160m	100m	3.0	28	950n			90	100m	50n	1.0u	BC	A	PD7x
102	SFH400-II	5.0m	100m	1.7	100m	470m	300m	4.0	6A	950n	20m	100m	12	100m	20n	1.0u	CB	A	PD7e Ø
103	SFH400-III	5.0m	100m	1.7	100m	470m	300m	4.0	6A	950n	32m	100m	12	100m	20n	1.0u	CB	A	PD7e Ø
104	SFH401I	5.0m	100m	1.7	100m	470m	300m	4.0	6A	950n	6.3m	100m	30	100m	20n	1.0u	CB	A	PD7e Ø
105	CLED155C	5.3m	50m	1.8	50m	165m	100m	3	5C	880n			20		50n		CE		PD8s
106	CLED155FC	5.3m	50m	1.8	50m	165m	100m	3	5C	880n			20		50n		CE		PD8s
107	FL1ML3	5.4m†Δ	50m	2.2	20m	120m	100m	5.0	2A	830n			60	50m	50n		CEFO	A Ø	PD12g Ø
108	SE5455-004	5.4m	100m	1.7	100m			3.0	5C	935n			20			600n#	BC	B ♦	PD7a Ø

SYMBOLS AND CODES EXPLAINED IN INTERPRETER

3. INFRARED LED LAMPS (IREDs) - Po ≥1 mW (Cont'd)

IN ORDER OF: (1) POWER OUTPUT (2) IF TEST (3) PEAK WAVELENGTH & (4) TYPE NUMBER

LINE No.	4 TYPE NUMBER	1 MIN. POWER OUTPUT Po (W)	2 IF TEST (A)	VF MAX (V)	IF TEST (A)	MAX RATINGS @ 25°C PD (W)	IF (A)	VR (V)	TEMP RNG. CODE - +	3 PEAK WAVE-LENGTH λp (m)	MIN AXIAL INTENSITY Ie W/Sr	IF TEST (A)	BEAM ANGLE θHI (°)	IF TEST (A)	SPECTRAL BAND WIDTH Δλ (m)	RESP. TIME (s)	MAT. & FEATURE MAT	LEAD CODE	DRAWING
1	CQX14	5.4m	100m	1.7	100m	1.3	100m	3.0	6F§	940n			15		60n	300n#	BC		PD7q
2	CQX15	5.4m	100m	1.7	100m	1.3	100m	3.0	6F§	940n			15		60n	300n#	BC		PD8m
3	GS5040-4	5.4m	100m	1.7	100m			2.0		940n			20			700u	BC	B	PD1174
4	LED55C	5.4m	100m	1.7	100m	1.3	100m	3.0	6F§	940n					60n	300n#	BC	E Ø	PD171 Ø
5	LED55CF	5.4m	100m	1.7	100m	1.3	100m	3.0	6F§	940n					60n	300n#	BC	E Ø	PD8m
6	LN65	5.5m†	100m	1.6	100m	160m	100m	3.0	3A%	950n				100m	50n		BC	B	PD212
7	C86025E	6.0m		1.3			100m		48⊘	940n						500n	BC		PD33I
8	CLED155D	6m	50m	1.8	50m	165m	100m	3	5C	880n			20		50n		CE		PD8s
9	CLED155FD	6m	50m	1.8	50m	165m	100m	3	5C	880n			20		50n		CE		PD8s
10	MII62006-2(A)	6.0m	50m	1.7	50m	125m		2.0	6C⊘	880n			20			500u	CE	B	PD1174
11	SE2470-002	6.0m△	50m	1.8	50m			3	5C	880n			18			600n#	CE	A §	PD25f Ø
12	LN176	6.0m	50m	1.8	100m	180m	100m	3.0	28	900n			25	50m	70n		BC	B	PD280f
13	TLN105	6.0m	50m	1.5	100m	150m	100m	5.0	27	945n			60		50n		BC	A	PD422a Ø
14	AL107A	6.0m	100m	2.0	100m		100m%		48								BC		PD237 Ø
15	CEN2010	6.0m†	100m	1.4	100m	150m	100m	6.0	4A	940n			15		50n		BC	A	PT142
16	EL1KL6	6.0m†△	100m	1.7	100m	200m	100m	5.0	5C	940n			20	100m	50n		BC	A §	PD7y Ø
17	TIL38	6.0m	100m	2.5 †	1.0		150m	5.0	5A	940n	120m	1.0	60	100m	50n	600n	BC	♦	PD16a
18	1N6264	6.0m	100m	1.7	100m	170m	100m	3.0	6F	945n			20		60n		BC	Y Ø	PD171a Ø
19	1N6265	6.0m	100m	1.7	100m	170m	100m	3.0	6F	945n			80		60n		BC	Y Ø	PD171b Ø
20	LN51F	6.0m	100m	1.2 †	100m	150m	100m	3.0	29	950n			32	100m	50n	1.0u	BC	B	PD8d Ø
21	LN51L	6.0m	100m	1.2 †	100m	150m	100m	3.0	29	950n			8.0	100m	50n	1.0u	BC	B	PD7c Ø
22	IRL401-1	6.3m△	100m	1.7	100m	470m	300m	4.0	5A%	965n	6.3m	100m	15	100m			BC	♦	TO-18 Ø
23	LD261-5	6.5m†	50m			85m%	50m	5.0	48%	950n	3.2m	50m	60	100m	55n		BC	A	PD146a
24	E1520	7.0m		2.5	1.0		100m			940n						100n	XX		TO-18
25	E1520F	7.0m		2.5	1.0		100m			940n						100n	XX		PD78
26	SE3470-001	7.0m	100m	1.9	100m			3	5C	880n			90			600n#	CE	Y ♦	PD172 Ø
27	SE5470-001	7.0m	100m	1.9	100m			3	5C	880n			20			600n#	CE	Y ♦	PD171c Ø
28	XC88FLCA	7.0m	100m	1.7	100m	170m	100m	3.0	6C	880n			65		80n	1.5u	EC	B ⊘	PD8x Ø
29	XC88PLCA	7.0m	100m	1.7	100m	170m	100m	3.0	6C	880n			20		80n	1.5u	EC	B ⊘	PD7z Ø
30	SIRAD4	7.0m	100m	1.7	100m	200m	100m	6.0	28	890n			20	100m	50n		CE	A	PD1116
31	LN172	7.0m	100m	1.7	100m	170m	100m	3.0	28	900n			100	100m	70n		BC Side	B	PD1068
32	LN175	7.0m	100m	1.7	100m	170m	100m	3.0	28	900n			120	100m	70n		BC Side	B	PD1068
33	1A83	7.0m	100m	1.8	100m	180m	100m	7.0	48§	940n			20		60n	600n#	BC	B	TO-18
34	SLR931A	7.5m†	50m	1.3 †	50m	150m	100m	5.0	28	945								A	PD1293q
35	SLR932A	7.5m†	50m	1.3 †	50m	150m	100m	5.0	28	945								A	PD1293r
36	CN305	8.0m†	50m	1.8	50m	150m	100m	5.0	38	880n	15m*	50m	18	50m	65n		CE	B	PD18e Ø
37	AN305(2)	8.0m†	50m	1.5	50m	150m	100m	5.0	38	950n	10m*	50m	8	50m	45n		BC	B	PD18e Ø
38	LD261-6	8.0m†	50m			85m	50m	5.0	48%	950n	5.0m	50m	60	100m	55n		BC	A	PD146a
39	CQW89A1	8m†	100m	2.2	100m	300m	130m	5.0	A §	830n	12m†	100m	40	100m	35n		GaAlAs	♦	PD232j Ø
40	CQW89A2	8m†	100m	2.2	100m	300m	130m	5.0	A §	830n	15m†	100m	40	100m	35n		GaAlAs	♦	PD232j Ø
41	CQW89A	8m†	100m	2.2	100m	300m	130m	5.0	A §	830n	9m†	100m	40	100m	35n		GaAs	♦	PD232j Ø
42	FL1K1	8.0m†△	100m	2.2	20m	140m	100m	5.0	2A	830n			100	100m	50n		CEFO	A ⊘	PD8h Ø
43	OP231(A)	8.0m	100m	2.0	100m	100m	50m	2.0	4A	880n			18	100m	50n	450n#	CE		PD7v
44	OP231W	8.0m	100m	2.0	100m	100m	50m	2.0	4A	880n			50	100m	50n	450n#	CE		PD8t
45	SIRD10	8.0m	100m	1.7	100m	100m	100m	5.0		940n			10	40	50n		BC	A	PD18a Ø
46	TSTA7100	8.0m†	100m	1.7	100m	450m	250m	5.0	5A%	950n	10m	100m	10	100m	50n		BC	A	PT142a
47	TSTS7100	8.0m†	100m	1.7	100m	450m	250m	5.0	5A%	950n	10m	100m		100m	50n		BC	A	PT142a
48	TSTS7101	8.0m†	100m	1.7	100m	450m	250m	5.0	5A%	950n	12m	100m		100m	50n		BC	A	PT142a
49	TSTS7102	8.0m†	100m	1.7	100m	450m	250m	5.0	5A%	950n	20m	100m		100m	50n		BC	A	PT142a
50	TSTS7103	8.0m†	100m	1.7	100m	450m	250m	5.0	5A%	950n	32m	100m		100m	50n		BC	A	PT142a
51	TSTS7200	8.0m†	100m	1.7	100m	450m	250m	5.0	5A%	950n	4.0m	100m		100m	50n		BC	A	PT142a
52	TSTS7201	8.0m†	100m	1.7	100m	450m	250m	5.0	5A%	950n	6.3m	100m		100m	50n		BC	A	PT142a
53	TSTS7202	8.0m†	100m	1.7	100m	450m	250m	5.0	5A%	950n	10m	100m		100m	50n		BC	A	PT142a
54	TSTS7203	8.0m†	100m	1.7	100m	450m	250m	5.0	5A%	950n	16m	100m		100m	50n		BC	A	PT142a
55	TSTS7500	8.0m†	100m	1.7	100m	450m	250m	5.0	5A%	950n	1.3m	100m		100m	50n		BC		PD14p
56	TSTS7501	8.0m†	100m	1.7	100m	450m	250m	5.0	5A%	950n	1.6	100m		100m	50n		BC		PD14p
57	TSTS7502	8.0m†	100m	1.7	100m	450m	250m	5.0	5A%	950n	2.5	100m		100m	50n		BC		PD14p
58	TSTS7503	8.0m†	100m	1.7	100m	450m	250m	5.0	5A%	950n	4.0	100m		100m	50n		BC		PD14p
59	CN304	9.0m†	50m	1.8	50m	150m	100m	5.0	38	880n	10m*	50m	35	50m	65n		CE	B	PD18 Ø
60	AN304(2)	9.0m†	50m	1.5	50m	150m	100m	5.0	38	950n	6.0m*	50m	50	50m	45n		BC	B	PD18 Ø
61	F5D2	9.0m	100m	1.7	100m	1.3	100m	3.0	6F§	880n			20	100m	80n	1.5u*	EC	E Ø	PD171a Ø
62	F5E2	9.0m	100m	1.7	100m	1.3	100m	3.0	6F§	880n			80	100m	80n	1.5u*	EC	E Ø	PD8r
63	SE3470-002	9.0m	100m	1.9	100m			3	5C	880n			90			600n#	CE	Y ♦	PD172 Ø
64	XC88FLCB	9.0m	100m	1.7	100m	170m	100m	3.0	6C	880n			65		80n	1.5u	EC	B ⊘	PD8x Ø
65	XC88PLCB	9.0m	100m	1.7	100m	170m	100m	3.0	6C	880n			20		80n	1.5u	EC	B ⊘	PD7z Ø
66	TLN105A	9.5m	50m	1.5	100m	150m	100m	5.	27	940n	7m	50m	56	50m	50n		BC	♦	PD1105 Ø
67	CQY89A	12m†	100m	1.4 †	100m	215m	130m	5.0	A §	930n	9.0m	100m	40	100m	50n		BC	A	PD232j Ø
68	LD242-2	13m†	100m			470m	250m	5.0	48%	950n	4.0m	100m	80	100	55n		BC	A	PD12p Ø
69	SFH409	14m†	100m	1.5	100m	165m	100m	5.0	5A%	950n	15m†	100m	40	100m	55n	1.0u	BC	B	PD18 Ø
70	LD242-3	16m	100m			470m	250m	5.0	48%	950n	6.3m	100m	80	100m	55n		BC	A	PD12p Ø

IRED LAMP, Po ≥ 10 mW

74	E1500	10m		1.3	100m		100m			890n						10n	XX		TO-18
75	E1500F	10m		1.3	100m		100m			890n						10n	XX		PD78
76	CLED5	10m	50m	1.8	60m	50m	100	3.0	5A	930n			12			.7u	BC		None
77	CLED5-2	10m	50m	1.8	60m	50m	100	3.0	5A	930n			12			.7u	BC		None
78	AL107B	10m	100m	2.0	100m		100m%		48								BC		PD237 Ø
79	FED086K1WA	10m	100m	2.3	100m		150m	2.0	49	865n▼			10	100m	45n		CE	Z	PD42p
80	OP291C	10m$	100m	2.0	100m	333m	2.0	2.0	4A	875n							CE	A	PD16ar
81	OP293C	10m$	100m	2.0	100m	333m	150m	2.0	4A	875n			60				CE	A	PD1237
82	F5D3(2)	10m	100m	1.7	100m	1.3	100m	3.0	6F§	880n			20	100m	80n	1.5u	EC	E Ø	PD171a Ø
83	F5E3(2)	10m	100m	1.7	100m	1.3	100m	3.0	6F§	880n			80	100m	80n	1.5u	EC	E Ø	PD8r
84	OP232(A)	10m	100m	2.0	100m	100m	50m	2.0	4A	880n			18	100m	50n	450n#	CE		PD7v
85	OP232W	10m	100m	2.0	100m	100m	50m	2.0	4A	880n			50	100m	50n	450n#	CE		PD8t
86	SE3470-003	10m	100m	1.9	100m			3	5C	880n			90			600n#	CE	Y ♦	PD172 Ø
87	SEP8790-001	10m$	100m	1.7	20m			3.0	48	880n			50			600n#	CE	♦	PT149 Ø
88	SFH480	10m†	100m	1.8	100m	470m	200m	5.0	5A%	880n	25m	100m	12	10m	80n	600n#	CEIR	B ⊘	PD7e Ø
89	SFH481	10m†	100m	1.8	100m	470m	200m	5.0	5A%	880n	10m	100m	30	10m	80n	600n#	CEIR	B ⊘	PD7e Ø
90	SFH482	10m†	100m	1.8	100m	470m	200m	5.0	5A%	880n	3.0m	100m	60	10m	80n	600n#	CEIR	B ⊘	PD8g Ø
91	XC88FLCC	10m	100m	1.7	100m	170m	100m	3.0	6C	880n			65		80n	1.5u	EC	B ⊘	PD8x Ø
92	XC88PLCC	10m	100m	1.7	100m	170m	100m	3.0	6C	880n			20		80n	1.5u	EC	B ⊘	PD7z Ø
93	SIRAD1	10m	100m	2.0	50m	150m	100m	6.0	28	890n			20	100m	50n		CE	B	PD19
94	SIRD500C	10m	100m	1.6	100m		100m	6.0		890n					50n		CE		CH ⊘
95	EL1KL5	10m†△	100m	1.7	100m	200m	100m	5.0	4A	940n			10	100m	50n		BC	A §	PD7g Ø
96	EL6KL5	10m†△	100m	1.7	100m	200m	100m	5.0	4A	940n			10	100m	50n		BC	B §	PD7g Ø
97	TSUS3400	10m†	100m	1.7	100m	170m	100m	5.0	5A%	950n	5.0	100m		100m	50n		BC		PD1190
98	IRL401-2	10m△	100m	1.7	100m	470m	300m	4.0	5A%	965n	10m	100m	15	100m			BC	♦	TO-18 Ø
99	C86014E	10m	150m	2.0 †	100m		100m		35⊘	820n						1.0n#	CE FO	A	PD100a Ø
100	HLP20RGA	10m†	230m	2.6	200m	600m	230m	3.0	24	760n				200m	30n	20n	CE		PD14f
101	HLP20RLA	10m†	230m	2.6	200m	600m	230m	3.0	24	760n				200m	30n	20n	CE		PD7w
102	SIRD11	11m	100m	1.7	100m	100m	100m	5.0		940n			30	40	50n		BC	A	PD18a Ø
103	TSUS5200	11m†	100m	1.7	100m	210m	150m	5.0	5A%	950n	85m	1.5		100m	50n		BC		None
104	TSUS5201	11m†	100m	1.7	100m	210m	150m	5.0	5A%	950n	120m	1.5		100m	50n		BC		PD1205
105	TSUS5400	11m†	100m	1.7	100m	210m	150m	5.0	5A%	950n	60m	1.5		100m	50n		BC		PD1206
106	TSUS5401	11m†	100m	1.7	100m	210m	150m	5.0	5A%	950n	85m	1.5		100m	50n		BC		PD1206
107	F5D1	12m	100m	1.7	100m	1.3	100m	3.0	6F§	880n			20	100m	80n	1.5u*	EC	E Ø	PD171a Ø
108	F5E1	12m	100m	1.7	100m	1.3	100m	3.0	6F§	880n			80	100m	80n	1.5u*	EC	E Ø	PD8r
109	OP233(A)	12m	100m	2.0	100m	100m	50m	2.0	4A	880n			18	100m	50n	450n#	CE		PD7v

SYMBOLS AND CODES EXPLAINED IN INTERPRETER

3. INFRARED LED LAMPS (IREDs) - Po ≥10 mW (Cont'd)

IN ORDER OF: (1) POWER OUTPUT (2) IF TEST (3) PEAK WAVELENGTH & (4) TYPE NUMBER

LINE No.	4 TYPE NUMBER	1 MIN. POWER OUTPUT Po (W)	2 IF TEST (A)	VF MAX (V)	IF TEST (A)	MAX RATINGS @ 25°C PD (W)	IF (A)	VR (V)	TEMP RNG. CODE - +	3 PEAK WAVE-LENGTH λp (m)	MIN AXIAL INTENSITY Ie W/Sr	IF TEST (A)	BEAM ANGLE θHI (°)	IF TEST (A)	SPECTRAL BAND WIDTH Δλ (m)	RESP. TIME (s)	MAT. & FEATURE MAT	LEAD CODE	DRAWING
1	OP233W	12m	100m	2.0	100m	100m	50m	2.0	4A	880n			50	100m	50n	450n#	CE		PD8t
2	OTL310D	12m	100m	1.8	100m	180m	100m	3.0	6C§	880n			20		80n	1.5u#	CE	A	PD1234 Ø
3	SE3470-004	12m	100m	1.9	100m			3	5C	880n			90			600n#	CE	Y ♦	PD172 Ø
4	XC88FLCD	12m	100m	1.7	100m	170m	100m	3.0	6C	880n			65		80n	1.5u	EC	B ⊘	PD8x Ø
5	XC88PLCD	12m	100m	1.7	100m	170m	100m	3.0	6C	880n			20		80n	1.5u	EC	B ⊘	PD7z Ø
6	CQY89A1	12m†	100m	1.4 †	100m	215m	130m	5.0	A §	930n	12m	100m	40	100m	50n		BC	A	PD232j Ø
7	CQY89A2(A)	12m†	100m	1.4 †	100m	215m	130m	5.0	A §	930n	15m	100m	40	100m	50n		BC	A	PD232j Ø
8	LD271	12m†	100m	1.5	100m	210m%	130m	5.0 %	5A%	950n	15m†	100m	50	100m	55n	1.0u#	BC	B	PD28p Ø
9	LD271L	12m†	100m	1.3 †	100m	210m%	130m	5 %	5A%	950n	15m†	100m	50	100m	55n		BC	A	PD280g Ø
10	OP291B	13m$	100m	2.0	100m	333m	2.0	2.0	4A	875n							CE	A	PD16ar
11	OP293B	13m$	100m	2.0	100m	333m	150m	2.0	4A	875n			60				CE	A	PD1237
12	SEP8790-002	13m$	100m	1.7	20m			3.0	48	880n			50			600n#	CE	♦	PT149 Ø
13	LD274	13m†	100m	1.5	100m	165m	100m	5.0	5A%	950n	60m†	100m	20	100m	55n	1.0u	BC	B	PD16ah Ø
14	TSUS5411	13m†	100m	3.5	1.5	210m	150m	5.0	5A%	950n	12m	100m		100m	50n		BC		None
15	IRL400-1	13m△	100m	1.7	100m	470m	300m	4.0	5A%	965n	13m	100m	6	100m			BC	♦	TO-18 Ø
16	TSHA5200	14m†	100m	1.7	100m	210m	100m	5.0	5A%	875n	400m	1.5		100m	80n		CE	A	PD280k
17	TSHA5500	14m†	100m	1.7	100m	210m	100m	5.0	5A%	875n	140m	1.5		100m	80n		CE	A	PD280k
18	TSHA6200	14m†	100m	1.7	100m	210m	100m	5.0	5A%	875n	400m	1.5		100m	80n		CE	A	PD284e
19	TSHA6500	14m†	100m	1.7	100m	210m	100m	5.0	5A%	875n	140m	1.5		100m	80n		CE	A	PD284e
20	ML5101A	15m		2.5				3	44⊘	830n			30				EC		PD926
21	ML5401A	15m		2.5				3	44⊘	830n			30				EC		PD927
22	EL-SKL	15m†△	50m	1.7	50m	100m	100m	5.0	4A	940n			36	50m	50n		BC	A ⊘	PD Ø
23	CQY99	15m†	100m	1.7	100m	210m	150m	5.0	XA§	925n	7.0m	100m	60		40n	1.0u#	BC	B	PD232a Ø
24	EL1KL3	15m†△	100m	1.7	100m	200m	100m	5.0	4A	940n			16	100m	50n	800n	BC	A §	PD Ø
25	EL1L2	15m†△	100m	1.7	100m	100m	100m	5.0	37	940n			60	100m	50n	800n	BC	A	PD Ø
26	EL6KL3	15m†△	100m	1.7	100m	200m	100m	5.0	4A	940n			16	100m	50n		BC	B §	PD7g Ø
27	CQX46	15m	100m	1.7	100m	.17	100m	5.0	2A	950n	5.0m	0.1	50	0.1	50n	450n*	BC	A	PD933
28	TSUS5202	15m†	100m	2.7	1.5	210m	150m	5.0	5A%	950n	170m	1.5		100m	50n		BC		PD1205
29	TSUS5402	15m†	100m	2.7	1.5	210m	150m	5.0	5A%	950n	120m	1.5		100m	50n		BC		PD1206
30	HLP30RGA	15m†	230m	2.6	200m	600m	230m	3.0	24	760n				200m	30n	20n	CE		PD14f
31	HLP30RLA	15m†	230m	2.6	200m	600m	230m	3.0	24	760n				200m	30n	20n	CE		PD7w
32	HLP30RGB	15m†	250m	2.3	200m	600m	250m	3.0	24	800n				200m	30n	20n	CE		PD14f
33	HLP30RLB	15m†	250m	2.3	200m	600m	250m	3.0	24	800n				200m	30n	12n	CE		PD7w
34	HLP30RGC	15m†	250m	2.3	200m	600m	250m	3.0	24	840n				200m	30n	12n	CE		PD14f
35	HLP30RLC	15m†	250m	2.3	200m	600m	250m	3.0	24	840n				200m	30n	12n	CE		PD7w
36	HLP30RGD	15m†	250m	2.3	200m	600m	250m	3.0	24	880n				200m	30n	12n	CE		PD14f
37	HLP30RLD	15m†	250m	2.3	200m	600m	250m	3.0	24	880n				200m	30n	12n	CE		PD7w
38	TIES27	15m	300m	2.2	300m		300m	2.0	07	940n			135	300m	45n		BC P-N	A	PD30 Ø
39	OPC124	15m	1.0	2.5	1.0	200m	1.0	2.0	6F	935n							BC		PD1028 *
40	VTE1012	15m♦	1.0	2.5	1.0	200m	5.0	3.0	5F	940n			70		60n	400n	BC		PD8s
41	VTE1112	15m♦	1.0	2.5	1.0	200m	5.0	3.0	5F	940n			20		60n	400n	BC		PD7r
42	OP291A	16m$	100m	2.0	100m	333m	2.0	2.0	4A	875n							CE	A	PD16ar
43	OP293A	16m$	100m	2.0	100m	333m	150m	2.0	4A	875n			60				CE	A	PD1237
44	SEP8790-003	16m$	100m	1.7	20m			3.0	48	880n			50			600n#	CE	♦	PT149 Ø
45	LD271H	16m†	100m	1.3 †	100m	210m%	130m	5.0 %	5A%	950n	16m†	100m	50	100m	55n		BC	♦	PD28p Ø
46	LD271LH	16m†	100m	1.5 †	100m	210m%	130m	5 %	5A%	950n	16m†	100m	50	100m	55n		BC	A ♦	PD280g Ø
47	TSHA5201	18m†	100m	1.7	100m	210m	100m	5.0	5A%	875n	600m	1.5		100m	80n		CE	A	PD280k
48	TSHA5501	18m†	100m	1.7	100m	210m	100m	5.0	5A%	875n	180m	1.5		100m	80n		CE	A	PD280k
49	TSHA6201	18m†	100m	1.7	100m	210m	100m	5.0	5A%	875n	600m	1.5		100m	80n		CE	A	PD284e
50	TSHA6501	18m†	100m	1.7	100m	210m	100m	5.0	5A%	875n	180m	1.5		100m	80n		CE	A	PD284e
51	CQL14A	20m♦		5.0			250m	30	5A%	820n					10n		XX		PD1025
52	CQL14B	20m♦		5.0			250m	30	5A%	850					10n		XX		PD1025
53	SFH484	20m†	100m	1.8	100m	200m	100m	5.0	5A%	880n	50m	100m	16	10m	80n	600n#	CEIR	B	PD280 Ø
54	SFH485	20m†	100m	1.8	100m	200m	100m	5.0	5A%	880n	16m	100m	40	10m	80n	600n#	CEIR	B	PD280 Ø
55	SFH485P	20m†	100m	1.8	100m	200m	100m	5.0	5A%	880n	3.0m	100m	80	10m	80n	600n#	CEIR	B	PD280 Ø
56	SFH487	20m†	100m	1.8	100m	200m	100m	5.0	5A%	880n	12m	100m	40	10m	80n	600n#	CEIR	B	PD279 Ø
57	SFH487P	20m†	100m	1.8	100m	200m	100m	5.0	5A%	880n	2.0m	100m	130	10m	80n	600n#	CEIR	B	PD279 Ø
58	AL1KL5	20m†△	100m	2.0	100m	100m	200m	5.0	4A	940n			14	100m	50n		CE	A ⊘	PD7g Ø
59	EL1L1	20m†△	100m	1.7	100m	100m	100m	5.0	37	940n			20	100m	50n	800n	BC	A	PD Ø
60	IRL400-2	20m△	100m	1.7	100m	470m	300m	4.0	5A%	965n	20m	100m	6	100m			BC	♦	TO-18 Ø
61	HLP20RA	20m†	230m	2.6	200m	600m	230m	3.0	24	760n				200m	30n	20n	CE		PD971
62	HLP20TA	20m†	230m	2.6	200m	600m	230m	3.0	24	760n				200m	30n	20n	CE		PD970
63	HLP20WRA	20m†	230m	2.6	200m	600m	230m	3.0	24	760n				200m	30n	20n	CE		PD971
64	HLP20WTA	20m†	230m	2.6	200m	600m	230m	3.0	24	760n				200m	30n	20n	CE		PD970
65	HLP40RGA	20m†	230m	2.6	200m	600m	230m	3.0	24	760n				200m	30n	20n	CE		PD14f
66	HLP40RLA	20m†	230m	2.6	200m	600m	230m	3.0	24	760n				200m	30n	20n	CE		PD7w
67	HLP40RGB	20m†	250m	2.3	200m	600m	250m	3.0	24	800n				200m	30n	12n	CE		PD14f
68	HLP40RLB	20m†	250m	2.3	200m	600m	250m	3.0	24	800n				200m	30n	12n	CE		PD7w
69	HLP40RGC	20m†	250m	2.3	200m	600m	250m	3.0	24	840n				200m	30n	12n	CE		PD14f
70	HLP40RLC	20m†	250m	2.3	200m	600m	250m	3.0	24	840n				200m	30n	12n	CE		PD7w
71	HLP40RGD	20m†	250m	2.3	200m	600m	250m	3.0	24	880n				200m	30n	12n	CE		PD14f
72	HLP40RLD	20m†	250m	2.3	200m	600m	250m	3.0	24	880n				200m	30n	12n	CE		PD7w
73	CQX19	20m	250m	1.2	250m	0.3	250m	5.0	28	950n	40m	.25	40	0.1	50n	830n*	BC	B	TO-93
74	TIES13	20m	300m	2.0	300m		300m	2.0	5A	930n			130	300m	45n		BC P-N	A	PD31
75	TSHA5202	22m†	100m	1.7	100m	210m	100m	5.0	5A%	875n	750m	1.5		100m	80n		CE	A	PD280k
76	TSHA5502	22m†	100m	1.7	100m	210m	100m	5.0	5A%	875n	240m	1.5		100m	80n		CE	A	PD280k
77	TSHA6202	22m†	100m	1.7	100m	210m	100m	5.0	5A%	875n	750m	1.5		100m	80n		CE	A	PD284e
78	TSHA6502	22m†	100m	1.7	100m	210m	100m	5.0	5A%	875n	240m	1.5		100m	80n		CE	A	PD284e
79	SEP8703-301	22m$	1.5	1.6	20m			3.0	48	880n			20			600n#	CE	B ♦	PD232a Ø
80	OP295C	24m$	1.5	4.0	1.5	333m	5.0	5.0	4A	875n							CE	A	PD16ar
81	ML6101A	25m♦		2.5				2.0	45⊘	780n			30				EC		PD926
82	ML6411A	25m♦		2.5				2.0	45⊘	780n			30				EC		PD1117
83	ML6701A	25m♦		2.5				2.0	45⊘	780n			30				EC		PD1045
84	TSHA5203	25m†	100m	1.7	100m	210m	100m	5.0	5A%	875n	900m	1.5		100m	80n		CE	A	PD280k
85	TSHA5503	25m†	100m	1.7	100m	210m	100m	5.0	5A%	875n	300m	1.5		100m	80n		CE	A	PD280k
86	TSHA6203	25m†	100m	1.7	100m	210m	100m	5.0	5A%	875n	900m	1.5		100m	80n		CE	A	PD284e
87	TSHA6503	25m†	100m	1.7	100m	210m	100m	5.0	5A%	875n	300m	1.5		100m	80n		CE	A	PD284e
88	CQX47	25m	0.1	6.0	1.5	.28	0.1	10	2A	950n	200m	1.5	55	0.1	50n	450n*	BC	A	PD624
89	HLP50RGB	25m†	250m	2.3	200m	600m	250m	3.0	24	800n				200m	30n	12n	CE		PD14f
90	HLP50RLB	25m†	250m	2.3	200m	600m	250m	3.0	24	800n				200m	30n	12n	CE		PD7w
91	HLP50RGC	25m†	250m	2.3	200m	600m	250m	3.0	24	840n				200m	30n	12n	CE		PD14f
92	HLP50RLC	25m†	250m	2.3	200m	600m	250m	3.0	24	840n				200m	30n	12n	CE		PD7w
93	HLP50RGD	25m†	250m	2.3	200m	600m	250m	3.0	24	880n				200m	30n	12n	CE		PD14f
94	HLP50RLD	25m†	250m	2.3	200m	600m	250m	3.0	24	880n				200m	30n	12n	CE		PD7w
95	LD273	26m†	100m	2.6 †	100m	260m%	100m	10 %	5A%	950n	25m†	100m	50	100m	55n	1.0u#	BC	♦	PD929
96	VTE1013	27m♦	1.0	2.5	1.0	200m	5.0	3.0	5F	940n			70		60n	400n	BC		PD8s
97	VTE1113	27m♦	1.0	2.5	1.0	200m	5.0	3.0	5F	940n			20		60n	400n	BC		PD7r
98	XC88-30	30m△	100m	1.7	100m	170m	100m	3.0	6C	880n			20		80n	1.5u	EC	B ⊘	PD7z Ø
99	XC88LC30	30m△	100m	1.7	100m	170m	100m	3.0	6C	880n			20		80n	1.5u	EC	B ⊘	PD7z Ø
100	AL1KL3	30m†△	100m	2.0	100m	100m	200m	5.0	4A	940n			26	100m	50n		CE	A ⊘	PD7g Ø
101	HLP30RA	30m†	230m	2.6	200m	600m	230m	3.0	24	760n				200m	30n	20n	CE		PD971
102	HLP30TA	30m†	230m	2.6	200m	600m	230m	3.0	24	760n				200m	30n	20n	CE		PD970
103	HLP30WRA	30m†	230m	2.6	200m	600m	230m	3.0	24	760n				200m	30n	20n	CE		PD971
104	HLP30WTA	30m†	230m	2.6	200m	600m	230m	3.0	24	760n				200m	30n	20n	CE		PD970
105	HLP30RB	30m†	250m	2.3	200m	600m	250m	3.0	24	800n				200m	30n	12n	CE		PD971
106	HLP30TB	30m†	250m	2.3	200m	600m	250m	3.0	24	800n				200m	30n	12n	CE		PD970
107	HLP30WRB	30m†	250m	2.3	200m	600m	250m	3.0	24	800n				200m	30n	12n	CE		PD971
108	HLP30WTB	30m†	250m	2.3	200m	600m	250m	3.0	24	800n				200m	30n	12n	CE		PD970
109	HLP60RGB	30m†	250m	2.3	200m	600m	250m	3.0	24	800n				200m	30n	12n	CE		PD14f
110	HLP60RLB	30m†	250m	2.3	200m	600m	250m	3.0	24	800n				200m	30n	12n	CE		PD7w

SYMBOLS AND CODES EXPLAINED IN INTERPRETER

3. INFRARED LED LAMPS (IREDs) - Po ≥10 mW (Cont'd)

IN ORDER OF: (1) POWER OUTPUT (2) IF TEST (3) PEAK WAVELENGTH & (4) TYPE NUMBER

LINE No.	4 TYPE NUMBER	1 MIN. POWER OUTPUT Po (W)	2 IF TEST (A)	VF MAX (V)	IF TEST (A)	MAX RATINGS @ 25°C PD (W)	IF (A)	VR (V)	TEMP RNG. CODE - +	3 PEAK WAVE-LENGTH λp (m)	MIN AXIAL INTENSITY Ie W/Sr	IF TEST (A)	BEAM ANGLE θHI (°)	SPECTRAL BAND IF TEST (A)	WIDTH Δλ (m)	RESP. TIME (s)	MAT. & FEATURE MAT	LEAD CODE	DRAWING
1	HLP30RC	30m†	250m	2.3	200m	600m	250m	3.0	24	840n				200m	30n	12n	CE		PD971
2	HLP30TC	30m†	250m	2.3	200m	600m	250m	3.0	24	840n				200m	30n	12n	CE		PD970
3	HLP30WRC	30m†	250m	2.3	200m	600m	250m	3.0	24	840n				200m	30n	12n	CE		PD971
4	HLP30WTC	30m†	250m	2.3	200m	600m	250m	3.0	24	840n				200m	30n	12n	CE		PD970
5	HLP60RGC	30m†	250m	2.3	200m	600m	250m	3.0	24	840n				200m	30n	12n	CE		PD14f
6	HLP60RLC	30m†	250m	2.3	200m	600m	250m	3.0	24	840n				200m	30n	12n	CE		PD7w
7	HLP30RD	30m†	250m	2.3	200m	600m	250m	3.0	24	880n				200m	30n	12n	CE		PD971
8	HLP30TD	30m†	250m	2.3	200m	600m	250m	3.0	24	880n				200m	30n	12n	CE		PD970
9	HLP30WRD	30m†	250m	2.3	200m	600m	250m	3.0	24	880n				200m	30n	12n	CE		PD971
10	HLP30WTD	30m†	250m	2.3	200m	600m	250m	3.0	24	880n				200m	30n	12n	CE		PD970
11	HLP60RGD	30m	250m	2.3	200m	600m	250m	3.0	24	880n				200m	30n	12n	CE		PD14f
12	HLP60RLD	30m†	250m	2.3	200m	600m	250m	3.0	24	880n				200m	30n	12n	CE		PD7w
13	TIES15	30m	1.0	2.0	1.0		1.0	2.0	5A	930n			130	1.0	45n		BC P-N	A	PD31
14	SEP8703-302	33m$	1.5	1.6	20m			3.0	48	880n			20			600n#	CE	B ♦	PD232a Ø
15	OP295B	36m$	1.5	4.0	1.5	333m	5.0	5.0	4A	875n							CE	A	PD16ar
16	IRL500(A)	40m△	100m				50m	2.0	48%	893n	40m	100m	2.5	100m	35n	90n	BCspot	B	PD1142 Ø
17	HLP40RA	40m†	230m	2.6	200m	600m	230m	3.0	24	760n				200m	30n	20n	CE		PD971
18	HLP40TA	40m†	230m	2.6	200m	600m	230m	3.0	24	760n				200m	30n	20n	CE		PD970
19	HLP40WRA	40m†	230m	2.6	200m	600m	230m	3.0	24	760n				200m	30n	20n	CE		PD971
20	HLP40WTA	40m†	230m	2.6	200m	600m	230m	3.0	24	760n				200m	30n	20n	CE		PD970
21	HLP40RB	40m†	250m	2.3	200m	600m	250m	3.0	24	800n				200m	30n	12n	CE		PD971
22	HLP40TB	40m†	250m	2.3	200m	600m	250m	3.0	24	800n				200m	30n	12n	CE		PD970
23	HLP40WRB	40m†	250m	2.3	200m	600m	250m	3.0	24	800n				200m	30n	12n	CE		PD971
24	HLP40WTB	40m†	250m	2.3	200m	600m	250m	3.0	24	800n				200m	30n	12n	CE		PD970
25	HLP40RC	40m†	250m	2.3	200m	600m	250m	3.0	24	840n				200m	30n	12n	CE		PD971
26	HLP40TC	40m†	250m	2.3	200m	600m	250m	3.0	24	840n				200m	30n	12n	CE		PD970
27	HLP40WRC	40m†	250m	2.3	200m	600m	250m	3.0	24	840n				200m	30n	12n	CE		PD971
28	HLP40WTC	40m†	250m	2.3	200m	600m	250m	3.0	24	840n				200m	30n	12n	CE		PD970
29	HLP40RD	40m†	250m	2.3	200m	600m	250m	3.0	24	880n				200m	30n	12n	CE		PD971
30	HLP40TD	40m†	250m	2.3	200m	600m	250m	3.0	24	880n				200m	30n	12n	CE		PD970
31	HLP40WRD	40m†	250m	2.3	200m	600m	250m	3.0	24	880n				200m	30n	12n	CE		PD971
32	HLP40WTD	40m†	250m	2.3	200m	600m	250m	3.0	24	880n				200m	30n	12n	CE		PD970
33	SEP8703-303	44m$	1.5	1.6	20m			3.0	48	880n			20			600n#	CE	B ♦	PD232a Ø
34	OP295A	48m$	1.5	4.0	1.5	333m	5.0	5.0	4A	875n							CE	A	PD16ar
35	XC88-50	50m△	100m	1.7	100m	170m	100m	3.0	6C	880n			20		80n	1.5u	EC	B ⊠	PD7z Ø
36	XC88LC50	50m△	100m	1.7	100m	170m	100m	3.0	6C	880n			20		80n	1.5u	EC	B ⊠	PD7z Ø
37	HLP50RB	50m†	250m	2.3	200m	600m	250m	3.0	24	800n				200m	30n	12n	CE		PD971
38	HLP50TB	50m†	250m	2.3	200m	600m	250m	3.0	24	800n				200m	30n	12n	CE		PD970
39	HLP50WRB	50m†	250m	2.3	200m	600m	250m	3.0	24	800n				200m	30n	12n	CE		PD971
40	HLP50WTB	50m†	250m	2.3	200m	600m	250m	3.0	24	800n				200m	30n	12n	CE		PD970
41	HLP50RC	50m†	250m	2.3	200m	600m	250m	3.0	24	840n				200m	30n	12n	CE		PD971
42	HLP50TC	50m†	250m	2.3	200m	600m	250m	3.0	24	840n				200m	30n	12n	CE		PD970
43	HLP50WRC	50m†	250m	2.3	200m	600m	250m	3.0	24	840n				200m	30n	12n	CE		PD971
44	HLP50WTC	50m†	250m	2.3	200m	600m	250m	3.0	24	840n				200m	30n	12n	CE		PD970
45	HLP50RD	50m†	250m	2.3	200m	600m	250m	3.0	24	880n				200m	30n	12n	CE		PD971
46	HLP50TD	50m†	250m	2.3	200m	600m	250m	3.0	24	880n				200m	30n	12n	CE		PD970
47	HLP50WRD	50m†	250m	2.3	200m	600m	250m	3.0	24	880n				200m	30n	12n	CE		PD971
48	HLP50WTD	50m†	250m	2.3	200m	600m	250m	3.0	24	880n				200m	30n	12n	CE		PD970
49	ML6702A	55m♦		2.5				2.0	45⊠	780n			25				EC		PD1045
50	SEP8703-304	55m$	1.5	1.6	20m			3.0	48	880n			20			600n#	CE	B ♦	PD232a Ø
51	HLP60RB	60m†	250m	2.3	200m	600m	250m	3.0	24	800n				200m	30n	12n	CE		PD971
52	HLP60TB	60m†	250m	2.3	200m	600m	250m	3.0	24	800n				200m	30n	12n	CE		PD970
53	HLP60WRB	60m†	250m	2.3	200m	600m	250m	3.0	24	800n				200m	30n	12n	CE		PD971
54	HLP60WTB	60m†	250m	2.3	200m	600m	250m	3.0	24	800n				200m	30n	12n	CE		PD970
55	HLP60RC	60m†	250m	2.3	200m	600m	250m	3.0	24	840n				200m	30n	12n	CE		PD971
56	HLP60TC	60m†	250m	2.3	200m	600m	250m	3.0	24	840n				200m	30n	12n	CE		PD970
57	HLP60WRC	60m†	250m	2.3	200m	600m	250m	3.0	24	840n				200m	30n	12n	CE		PD971
58	HLP60WTC	60m†	250m	2.3	200m	600m	250m	3.0	24	840n				200m	30n	12n	CE		PD970
59	HLP60RD	60m†	250m	2.3	200m	600m	250m	3.0	24	880n				200m	30n	12n	CE		PD971
60	HLP60TD	60m†	250m	2.3	200m	600m	250m	3.0	24	880n				200m	30n	12n	CE		PD970
61	HLP60WRD	60m†	250m	2.3	200m	600m	250m	3.0	24	880n				200m	30n	12n	CE		PD971
62	HLP60WTD	60m†	250m	2.3	200m	600m	250m	3.0	24	880n				200m	30n	12n	CE		PD970
63	TIES14	60m	1.0	2.0	1.0		1.0	2.0	5A	930n			130	1.0	45n		BC P-N	A	PD31
64	VTE1211	90m△	1.0	2.5	1.0	200m	150m	5.0	48	940n	15m†	100m	20	100m	60n	400n#	BC	A	PD1021

IRED LAMP, Po ≥ 100 mW

68	C86038E	100m	1.0	5.0	1.0				4F	900n					120n	470n	CE		PD106
69	C86038E/F	100m	1.0	5.0	1.0				4F	900n					120n	470n	CE		PD14h
70	TIES16A	100m	2.0	2.0	2.0		2.0	2.0	5A	930n			150	2.0	45n		BC P-N	A	PD39 Ø
71	SEP8703-001	150m$	1.5	1.6	20m			3.0	48	880n			50			600n#	CE	B ♦	PD232a Ø
72	OP290C	160m$	1.5	4.0	1.5	333m	5.0	5.0	4A	875n							CE	A	PD16ar
73	SEP8703-002	180m$	1.5	1.6	20m			3.0	48	880n			50			600n#	CE	B ♦	PD232a Ø
74	OP290B	200m$	1.5	4.0	1.5	333m	5.0	5.0	4A	875n							CE	A	PD16ar
75	SEP8703-003	210m$	1.5	1.6	20m			3.0	48	880n			50			600n#	CE	B ♦	PD232a Ø
76	OP290A	240m$	1.5	4.0	1.5	333m	5.0	5.0	4A	875n							CE	A	PD16ar
77	SEP8703-004	240m$	1.5	1.6	20m			3.0	48	880n			50			600n#	CE	B ♦	PD232a Ø
78	GL50G	400m	50m	1.4	50m	150m	100m	6.0	3C	940n			20				XX		TO-18
79	EL-SKLT	700m†△	50m	1.5	50m	100m	100m	5.0	4A	940n			24	50m	50n		BC	A ⊠	PT141 Ø
80	C86040EW4	3.0 ♦		8			17	2	57	895n			15		5.0n	1.0n	CE		PD100
81	HFE4000X22	3.0	100m	2.0	100m		150m	5.0	5C⊠	850n						6.0n#	CE FO	Z	PD22h
82	HFE4000X23	3.0	100m	2.0	100m		150m	5.0	5C⊠	850n						6.0n#	CE FO	Z	PD22h
83	OP292A	3.2 $	20m	1.7	20m	333m	1.0	5.0	4A	875n							CE	A	PD16ar
84	TLN110	9.0 †	50m	1.5	100m	150m	100m	5.	27	930n	15m	50m	18	50m	45n		BC	♦	PD422
85	LDT350	100	40	65	40		40			905n			22		10n				PD1107

Character displays in seven different technologies are described beginning on page 175.

SYMBOLS AND CODES EXPLAINED IN INTERPRETER

IN ORDER OF TYPE AND: (1) NO OF ELEMENTS (2) COLOR & (3) TYPE NUMBER

LINE No.	3 TYPE NUMBER	1 NO. OF ELEM	2 COLOR	MAX FWD VOLTAGE VF (V)	IF TEST (A)	PD RATED MAX (W)	IF RATED MAX (A)	TEMP RNG. CODE - +	PEAK WAVE LGTH λp (m)	LUMINOUS INTENSITY (MIN) Iv (cd)	IF TEST (A)	MIN RADIAT PWR Po (W)	BEAM ANGLE θHI (°)	MAT	FEATURES	SCHE-MATIC	DRAWING
IRED ARRAY																	
4	LD262	2	1	1.3 †	50m	85m#	50m	48%	950n				60	BC	Radiant Power 8mw	None	PA27 △
5	LE17-02	2	1	16			40		230u					BC	SS2	None	PD451 Ø
6	LEA502SN	2	1	1.5	50m	150m	50m		900n				190	XX		None	None
7	LD263	3	1	1.3 †	50m	85m#	50m	48%	950n				60	BC	Radiant Power 8mw	None	PA27 △
8	LE25-02	3	1	20			40		230u					BC	SS3	None	PD451 Ø
9	LEA503SN	3	1	1.5	50m	150m	50m		900n				190	XX		None	None
10	LD264	4	1	1.3 †	50m	85m#	50m	48%	950n				60	BC	Radiant Power 8mw	None	PA27 △
11	LEA504SN	4	1	1.5	50m	150m	50m		900n				190	XX		None	None
12	G5R	5	1	8.5	40m	500m	100m		950n		50m		100	BC		None	None
13	LD265	5	1	1.3 †	50m	85m#	50m	48%	950n				60	BC	Radiant Power 8mw	None	PA27 △
14	LEA505S	5	1	1.5	50m	150m	50m		900n				190	XX		None	None
15	LD266	6	1	1.3	50m	85m#	50m	48%	950n				60	BC	Radiant Power 8mw	None	PA27 △
16	LEA506S	6	1	1.5	50m	150m	50m		900n				190	XX		None	None
17	LD267	7	1	1.3	50m	85m#	50m	48%	950n				60	BC	Radiant Power 8mw	None	PA27 △
18	LEA507S	7	1	1.5	50m	150m	50m		900n				190	XX		None	None
19	LD268	8	1	1.3 †	50m	85m#	50m	48%	950n				60	BC	Radiant Power 8mw	None	PA27 △
20	LEA508	8	1	1.5	50m	150m	50m		900n				190	XX		None	None
21	G900	9	1	15	40m	60m	40m		940n		40m		106	BC	for Punch tape	None	PA74 ⊠
22	LD269	9	1	1.3 †	50m	85m#	50m	48%	950n				60	BC	Radiant Power 8mw	None	PA27 △
23	LEA509	9	1	1.5	50m	150m	50m		900n				190	XX		None	None
24	OT3031A	9	1			450m	90m		900n						Light Bar	None	PA34 ⊠
25	LD260	10	1	1.3 †	50m	85m#	50m	48%	950n				60	BC	Radiant Power 5mW	None	PA27 △
26	LEA510	10	1	1.5	50m	150m	50m		900n				190	XX		None	None
27	LEA511	11	1	1.5	50m	150m	50m		900n				190	XX		None	None
28	G1200	12	1	1.7	40m	60m	60m		950n		40m		60	BC		None	None
29	G1200-2	12	1	1.7	50m	100m	100m		940n				106	BC	card punch appl.	None	PA75 ⊠
30	LEA512	12	1	1.5	50m	150m	50m		900n				190	XX		None	None
LIGHT BAR																	
34	TLFR1110	1	2	3.0	20m	100m	30m	5A%	635n	1.0m	10m		100		5.5x7mm Light Bar	None	PD1386
35	MU91-2001	1	2	2.0	20m	60m	30m	38	660n	6.0m†	20m					None	PA152
36	MU92-2001	1	2	2.0	20m	60m	30m	38	660n	6.0m†	20m					None	PA153
37	MU93-2001	1	2	2.0	20m	60m	30m	38	660n	8.0m†	20m					None	PA154
38	MU03-2250	1	2	2.0	20m	60m	30m	48	660n	10m†	20m					None	PA109
39	MU03-2201	1	2	2.0	20m	120m	30m	48	660n	20m†	20m					None	PA109
40	MU91-3001	1	3	2.5	20m	75m	30m	38	605n	6.0m†	20m					None	PA152
41	MU92-3001	1	3	2.5	20m	75m	30m	38	605n	6.0m†	20m					None	PA153
42	MU93-3001	1	3	2.5	20m	75m	30m	38	605n	8.0m†	20m					None	PA154
43	MU03-3201	1	3	2.5	20m	125m	25m	48	605n	10m†	20m					None	PA109
44	TLFY1110	1	4	3.0	20m	100m	30m	5A%	585n	1.0m	10m		100		5.5x7mm Light Bar	None	PD1386
45	MU91-4001	1	4	2.5	20m	75m	30m	38	570n	6.0m†	20m					None	PA152
46	MU92-4001	1	4	2.5	20m	75m	30m	38	570n	6.0m†	20m					None	PA153
47	MU93-4001	1	4	2.5	20m	75m	30m	38	570n	8.0m†	20m					None	PA154
48	MU03-4201	1	4	2.5	20m	150m	30m	48	570n	20m†	20m					None	PA109
49	TLFG1110	1	5	3.0	20m	100m	30m	5A%	565n	1.0m	10m		100		5.5x7mm Light Bar	None	PD1386
50	MU91-5001	1	5	2.5	20m	75m	30m	38	555n	2.4m†	20m					None	PA152
51	MU92-5001	1	5	2.5	20m	75m	30m	38	555n	2.4m†	20m					None	PA153
52	MU93-5001	1	5	2.5	20m	75m	30m	38	555n	3.0m†	20m					None	PA154
53	MU03-5201	1	5	2.5	20m	125m	25m	48	555n	10m†	20m					None	PA109
54	MU03-5202	1	5	2.5	20m	150m	30m	48	560n	16m†	20m					None	PA109
55	DBP002RG	2		2.8	20m	155m	30m			1.5m	20m			XX	Tri-color R/G/Y	ED2-2	PA109
56	BU227R	2	2	5.0 †	10m	150m	30m	36	700n							None	PA150
57	TLFR2100	2	2	2.0	20m	100m#	50m	5A%	660n	400u	10m		100	EA	4x9mm Light Bar	None	PA99
58	LAB500(2)	2	2	1.6 †	10m	110m	20m		655n	1.2m	10m			CA		None	PA127
59	LN0202RP2	2	2	2.2 †	20m	60m	20m		700n	1.5m	10m			BD		None	PA63
60	TLFR2110	2	2	3.0	20m	100m	30m	5A%	635n	1.6m	10m		100		5.5x7mm Light Bar	None	PD1387
61	LAB501	2	2	1.9 †	10m	120m	20m		695n	1.8m	10m			BD		None	PA127
62	DBR001R	2	2	3	20m	120m	20m		635n	2.0m	20m			XX	Flush Mountable	ED2-1	PA114
63	LTL2300HR	2	2	2.8	20m	75m	25m		630n	3.2m	10m			CA	RYG;Rect	None	PA147
64	LTL57173HR	2	2	2.8	20m	75m	25m		635n	3.8m	10m			CA	RYG;Rect	None	PA101
65	HLMP2300	2	2	2.6	20m	135m	90m		635n	4.5m	20m			CA	1 seg x 2 elem	None	PS216
66	DBP002R	2	2	2.4	20m	140m	30m		635n	5.0m	20m			XX	Flush Mountable	ED2-3	PA110
67	MU11-2201	2	2	1.7 †	20m	120m	30m	48	660n	20m†	20m					None	PA165
68	MU03-9201	2	25	2.2 †	20m	62m	25m	48	555n	4.0m†	20m					None	PA109
69	MT222HRG	2	25	2.8	20m	140m	25m		635n	6.0m†	15m			BD	R/G (Ind) Axial	None	PD1356a
70	BU227A	2	3	5.0 †	20m	250m	50m	36	605n							None	PA150
71	TLFO2100	2	3	3.0	20m	100m#	30m	5A%	630n	1.6m	10m		100	EB	4x9mm Light Bar	None	PA99
72	DBR001E	2	3	3.0	20m	120m	20m		635n	2.0m	20m			XX	Flush Mountable	ED2-1	PA114
73	LAB504	2	3	2.0 †	10m	115m	20m		635n	2.5m	10m			CA		None	PA127
74	LN0202YP4	2	3	2.2 †	20m	60m	20m		590n	3m†	10m			CA		None	PA63
75	OLB2300(A)	2	3	2.6	20m	135m#	30m	48%	635n	4.5m	20m			CA	X-Y Stackable	None	PA77 ⊠
76	MU11-3201	2	3	2.2 †	20m	125m	25m	48	605n	10m†	20m					None	PA165
77	BU227Y	2	4	5.0 †	20m	250m	50m	36	570n							None	PA150
78	TLFY2100	2	4	3.0	20m	100m#	30m	5A%	585n	1.0m	10m		100	EB	4x9mm Light Bar	None	PA99
79	TLFY2110	2	4	3.0	20m	100m	30m	5A%	585n	1.6m	10m		100		5.5x7mm Light Bar	None	PD1387
80	DBR001Y	2	4	3.0	20m	120m	20m		585n	2.0m	20m			XX	Flush Mountable	ED2-1	PA114
81	LAB503	2	4	2.0 †	10m	115m	20m		585n	2.5m	10m			CA		None	PA127
82	LTL53173Y	2	4	2.8m	20m				585n	2.5m†	10m					None	PA101
83	LTL2400Y	2	4	2.8	20m	60m	20m		585n	2.8m	10m			CA	RYG;Rect	None	PA147
84	DBP002Y	2	4	2.5	20m	100m	20m		585n	4.0m	20m			XX	Flush Mountable	ED2-3	PA110
85	HLMP2400	2	4	2.6	20m	85m	60m		583n	4.0m	20m				CA1 seg x 2 elem	None	PS216
86	YLB2400(A)	2	4	2.6	20m	85m#	25m	48%	583n	4.0m	20m			CA	X-Y Stackable	None	PA77 ⊠
87	MU11-4201	2	4	2.1 †	20m	150m	30m	48	570n	20m†	20m					None	PA165
88	BU227G	2	5	5.0 †	20m	250m	50m	36	560n							None	PA150
89	TLFG2100	2	5	3.0	20m	100m#	30m	5A%	565n	1.0m	10m		100	BD	4x9mm Light Bar	None	PA99
90	TLFG2110	2	5	3.0	20m	100m	30m	5A%	565n	1.6m	10m		100		5.5x7mm Light Bar	None	PD1387
91	DBR001G	2	5	3.0	20m	150m	25m		565n	2.5m	20m			XX	Flush Mountable	ED2-1	PA114
92	LAB502	2	5	2.0 †	10m	115m	20m		565n	2.5m	10m			CA		None	PA127
93	LTL54173G	2	5	2.8m	20m				565n	2.5m†	10m					None	PA101
94	LTL2500G	2	5	2.8	20m	75m	25m		565n	3.2m	10m			BD	RYG;Rect	None	PA147
95	DBP002G	2	5	2.8	20m	170m	30m		565n	3.5m	20m			XX	Flush Mountable	ED2-3	PA110
96	GLB2500(A)	2	5	2.6	20m	135m#	30m	48%	565n	3.7m	20m			BD	X-Y Stackable	None	PA77 ⊠
97	HLMP2000	2	5	2.6	20m	135m	30m		556n	5m	20m			BD	X-Y Stackable	None	PS216a
98	HLMP2100	2	5	2.6	20m	135m	30m		556n	5m	20m			BD	Lite bar;XY Stkbl	None	PS225b
99	LN0202GP3	2	5	2.2 †	20m	60m	20m		565n	5m†	10m			BD		None	PA63
100	HLMP2500	2	5	2.6		135m			565n	6.0m				XX	.35X.15 inch	None	PS216
101	MU11-5201	2	5	2.2 †	20m	125m	25m	48	555n	10m†	20m					None	PA165
102	HLMP2135	2	5	2.6	20m	135m	30m		556n	11m	20m			BD	Lite bar;XY Stkbl	None	PS225f
103	HLMP2170	2	5	2.6	20m	135m	30m		556n	11m	20m			BD	Lite bar;XY Stkbl	None	PS225d
104	SLF502D	2	8	2.2 †	20m	70m	30m		565n	1.5m†				CA		None	PD1335
105	HLMP6203	3	2	2.0	10m	100m	50m		655n	500u	10m		45	CA	Matched	None	PA42 ⊠
106	TLFR3100	3	2	2.0		100m#	50m		660n	630u			100	EA	4x16mm Light Bar	None	PA98
107	HLMP6653	3	2	3.0	10m	120m	30m		635n	1.0m	10m		80	CA	Matched	None	PA42
108	SLF103B	3	2	2.0 †	10m	140m	30m		700n	4.8m†				BD		None	PD1333
109	SLF106B	3	2	2.0 †	10m	70m	25m		700n	4.8m†				BD		None	PD1336
110	DBP010R	3	2	2.4	20m	210m	30m		635n	7.0m	20m			XX	Flush Mountable	ED3-1	PA111

SYMBOLS AND CODES EXPLAINED IN INTERPRETER

4. LED & IRED ARRAYS - Light Bar (Cont'd)

IN ORDER OF TYPE AND: (1) NO OF ELEMENTS (2) COLOR & (3) TYPE NUMBER

LINE No.	3 TYPE NUMBER	1 NO. OF ELEM	2 COLOR	MAX FWD VOLTAGE VF (V)	IF TEST (A)	PD RATED MAX (W)	IF RATED MAX (A)	TEMP RNG. CODE - +	PEAK WAVE LGTH λp (m)	LUMINOUS INTENSITY (MIN) Iv (cd)	IF TEST (A)	MIN RADIAT PWR Po (W)	BEAM ANGLE θHI (°)	MAT	FEATURES	SCHE-MATIC	DRAWING
1	BR0014	3	2	1.7 †	20m	180m	30m	28	660n	16m†	20m					None	PA160
2	BR0015	3	2	1.7 †	20m	180m	30m	28	660n	16m†	20m					None	PA160
3	MU04-2101	3	2	2.0	20m	180m	30m	48	660n	32m†	20m					None	PA111
4	MU09-9103	3	23	2.2 †	20m	125m	25m	48	605n	8.0m†	20m					None	PA164
5	MU09-9102	3	24	2.1 †	20m	150m	30m	48	570n	12m†	20m					None	PA164
6	SLA5372-01	3	25	2.0 †	15m	120m	25m		565n	1.8m†	15m			BD	Com Ka	None	PA141
7	MU09-9101	3	25	2.2 †	20m	125m	25m	48	555n	6.0m†	20m					None	PA164
8	TLFO3100	3	3	3.0	20m	100m#	30m	5A%	630n	2.5m	10m		100	EB	4x16mm Light Bar	None	PA98
9	AA0014	3	3	2.2 †	20m	190m	25m	28	605n	10m†	20m					None	PA160
10	AA0015	3	3	2.2 †	20m	190m	25m	28	605n	10m†	20m					None	PA160
11	MU04-3101	3	3	2.5	20m	190m	25m	48	605n	16m†	20m					None	PA111
12	HLMP6753	3	4	3.0	10m	120m	20m		583n	1.0m	10m		90	CA	Matched	None	PA42
13	TLFY3100	3	4	3.0	20m	100m#	30m	5A%	585n	1.6m	10m		100	EB	4x16mm Light Bar	None	PA98
14	DBP010Y	3	4	2.5	20m	150m	20m		585n	6.0m	20m			XX	Flush Mountable	ED3-1	PA111
15	PY0014	3	4	2.1 †	20m	225m	30m	28	570n	20m†	20m					None	PA160
16	PY0015	3	4	2.1 †	20m	225m	30m	28	570n	20m†	20m					None	PA160
17	MU04-4101	3	4	2.5	20m	225m	30m	48	570n	32m†	20m					None	PA111
18	HLMP6853	3	5	3.0	10m	120m	30m		565n	1.0m	10m		70	CA	Matched	None	PA42
19	TLFG3100	3	5	3.0	20m	100m#	30m	5A%	565n	1.6m	10m		100	BD	4x16mm Light Bar	None	PA98
20	DBP010G	3	5	2.8	20m	250m	30m		565n	5.0m	20m			XX	Flush Mountable	ED3-1	PA111
21	BG0014	3	5	2.2 †	20m	190m	25m	28	555n	6.0m†	20m					None	PA160
22	BG0015	3	5	2.2 †	20m	190m	25m	28	555n	6.0m†	20m					None	PA160
23	GLB2800	3	5	2.6	20m	135m#	30m	48%	565n	10m†	20m			BD	X-Y Stackable	None	PA144
24	SLF203B	3	5	2.2 †	20m	140m	30m		565n	10.0m†				BD		None	PD1333
25	SLF206B	3	5	2.2 †	20m	70m	25m		565n	10.0m†				BD		None	PD1336
26	MU04-5101	3	5	2.5	20m	190m	25m	48	555n	16m†	20m					None	PA111
27	MU04-5102	3	5	2.5	20m	225m	30m	48	560n	20m†	20m					None	PA111
28	730-6014	4	2	2.2	27m	237m								BD	Adjustable Barriers	None	PY562 ☑
29	730-6016	4	2	5.0	27m	540m								BD	Adjustable Barriers	None	PY563
30	BU198R	4	2	2.5	10m	150m	30m	37	700n							None	PA149
31	BU443R	4	2	4.8	10m	250m	30m	37	700n							None	PA151
32	HLMP6204	4	2	2.0	10m	100m	50m		655n	500u	10m		45	CA	Matched	None	PA42a ☑
33	LTL2600HR	4	2	2.8	20m	75m	25m		630n	3.2m	10m			CA	RYG;Rect	None	PA78
34	LN0401RP2	4	2	2.2 †	20m	60m	20m		700n	4m†	10m			BD		None	PA63a
35	TDAR4100	4	2	3.0	20m	300m	25m	48%	635n	4.0m	10m		100		10x10 mm Bar Display	None	PA96
36	LTL2350HR	4	2	2.8	20m	75m	25m		630n	7.0m	10m			CA	RYG;Rect	None	PA129
37	LTL2655HR	4	2	2.8	20m	75m	25m		630n	7.0m	10m			CA	RYG;Rect	None	PA78
38	HLMP2600	4	2	2.6		135m			635n	8.0m				XX	.35X.35 inch	None	PS225B
39	HLMP2350	4	2	2.6	20m	135m	90m		635n	9.0m	20m			CA	1 seg x 4 elem	None	PS216a
40	DBP220R	4	2	2.4	20m	288m	30m		635n	10.0m	20m			XX	Flush Mountable	ED4-1	PA112
41	MU02-2201	4	2	2.0	20m	240m	30m	48	660n	42m†	20m					None	PA148
42	MU08-2201	4	2	1.7 †	20m	240m	30m	48	660n	42m†	20m					None	PA163
43	HLMP2655	4	2	2.6	20m	135m	90m		635n	9.0	20m			CA	X-Y Stackable	None	PS225A
44	HLMP2950	4	24	2.6	20m	85m	20m		583n	8m	20m			EB	Bicolor Lite Bar	None	PS225a
45	HLMP2980	4	25	2.6	20m	135m	25m		556n	7.5m	20m			EB	/BD Bicolor	None	PS225a
46	HLMP2965	4	25	2.6	20m	135m	25m		565n	7.5	20m			EB	Bicolor	None	PS225a
47	BU198A	4	3	2.5	20m	250m	50m	37	605n							None	PA149
48	OLB2600(A)	4	3	2.6	20m	135m#	30m	48%	635n	4.5m†	20m			CA	X-Y Stackable	None	PA144
49	LN0401YP4	4	3	2.2 †	20m	60m	20m		590n	6m†	10m			CA		None	PA63a
50	MU02-3201	4	3	2.5	20m	250m	25m	48	605n	20m†	20m					None	PA148
51	MU08-3201	4	3	2.2 †	20m	250m	25m	48	605n	20m†	20m					None	PA163
52	OLB2350(A)	4	3	2.6	20m	135m#	30m	48%	635n	20m†	20m			CA	X-Y Stackable	None	PA143 ☑
53	OLB2655(A)	4	3	2.6	20m	135m#	30m	48%	626n	20m†	20m			CA	X-Y Stackable	None	PA78
54	BU198Y	4	4	2.5	20m	250m	50m	37	570n							None	PA149
55	HLMP6754	4	4	3.0	10m	120m	20m		583n	1.0m	10m		90	CA	Matched	None	PA42
56	LTL2700Y	4	4	2.8	20m	60m	20m		585n	2.8m	10m			CA	RYG;Rect	None	PA78
57	DBP220Y	4	4	2.5	20m	200m	20m		585n	3.0m	20m			XX	Flush Mountable	ED4-1	PA112
58	HLMP2700	4	4	2.6	20m	85m	60m		583n	4.0m	20m			CA	2 seg x 2 elem	None	PS225B
59	TDAY4100	4	4	3.0	20m	300m	25m	48%	585n	4.0m	10m		100		10x10 mm Bar Display	None	PA96
60	LTL2450Y	4	4	2.8	20m	60m	20m		585n	6.0m	10m			CA	RYG;Rect	None	PA129
61	YLB2700	4	4	2.6	20m	85m#	25m	48%	583n	6.0m†	20m			CA	X-Y Stackable	None	PA144
62	HLMP2450	4	4	2.6	20m	85m	60m		583n	8.0m	20m			CA	1 seg x 4 elem	None	PS216a
63	HLMP2755	4	4	2.6	20m	85m	60m		583n	8.0m	20m			CA	2 seg x 2 elem	None	PS225A
64	YLB2450(A)	4	4	2.6	20m	85m#	25m	48%	583n	12m†	20m			CA	X-Y Stackable	None	PA143 ☑
65	YLB2755(A)	4	4	2.6	20m	85m#	25m	48%	585n	12m†	20m			CA	X-Y Stackable	None	PA78
66	MU02-4201	4	4	2.5	20m	300m	30m	48	570n	42m†	20m					None	PA148
67	MU08-4201	4	4	2.1 †	20m	300m	30m	48	570n	42m†	20m					None	PA163
68	BU198G	4	5	2.5	20m	250m	50m	37	560n							None	PA149
69	HLMP6854	4	5	3.0	10m	120m	30m		565n	1.0m	10m		70	CA	Matched	None	PA42
70	LTL2800G	4	5	2.8	20m	75m	25m		565n	3.2m	10m			BD	RYG;Rect	None	PA78
71	DBP220G	4	5	2.8	20m	336m	30m		565n	5.0m	20m			XX	Flush Mountable	ED4-1	PA112
72	HLMP2120	4	5	2.6	20m	135m	30m		556n	5m	20m			BD	Lite bar;XY Stkbl	None	PS225e
73	HLMP2800	4	5	2.6		135m			565n	5.0m				XX	.35X.35 inch	None	PS225B
74	TDAG4100	4	5	3.0	20m	300m	25m	48%	565n	6.3m	10m		100		10x10 mm Bar Display	None	PA96
75	LTL2550G	4	5	2.8	20m	75m	25m		565n	7.0m	10m			BD	RYG;Rect	None	PA129
76	LTL2855G	4	5	2.8	20m	75m	25m		565n	7.0m	10m			BD	RYG;Rect	None	PA78
77	HLMP2855	4	5	2.6	20m	135m	90m		565n	7.5m	20m			BD	2 seg x 2 elem	None	PS225A
78	HLMP2050	4	5	2.6	20m	135m	30m		556n	11m	20m			BD	X-Y Stackable	None	PS216b
79	HLMP2155	4	5	2.6	20m	135m	30m		556n	11m	20m			BD	X-Y Stackable	None	PS225a
80	HLMP2550	4	5	2.6		135m			565n	13m				XX	.35X.15 inch	None	PS216a
81	GLB2550(A)	4	5	2.6m	20m	135m#	30m	48%	565n	20m†	20m			BD	X-Y Stackable	None	PA143 ☑
82	GLB2855(A)	4	5	2.6	20m	135m#	30m	48%	565n	20m†	20m			BD	X-Y Stackable	None	PA78
83	MU02-5201	4	5	2.5	20m	250m	25m	48	555n	20m†	20m					None	PA148
84	MU08-5201	4	5	2.2 †	20m	250m	25m	48	555n	20m†	20m					None	PA163
85	HLMP2185	4	5	2.6	20m	135m	30m		556n	22m	20m			BD	X-Y Stackable	None	PS225c
86	MU02-5202	4	5	2.5	20m	300m	30m	48	560n	32m†	20m					None	PA148
87	MU07-2101	5	2	1.7 †	20m	300m	30m	48	660n	40m†	20m					None	PA162
88	MU07-3101	5	3	2.2 †	20m	320m	25m	48	605n	20m†	20m					None	PA162
89	MU07-4101	5	4	2.1 †	20m	375m	30m	48	570n	40m†	20m					None	PA162
90	MU07-5101	5	5	2.2 †	20m	320m	25m	48	555n	20m†	20m					None	PA162
91	DBS040R	6	2	2.5	20m	450m	30m		700n	5.0m	20m			XX	Flush Mountable	ED6-1	PA113
92	LN0603RP2	6	2	2.2 †	20m	60m	20m		700n	5m†	10m			BD		None	PA64
93	MU13-9102	6	24	2.1 †	20m	375m	30m	48	570n	40m†	20m					None	PA166
94	MU13-9101	6	25	2.2 †	20m	310m	25m	48	555n	14m†	20m					None	PA166
95	LN0603RP8	6	3	2.1 †	20m	60m	20m		630n	13m†	10m			CA		None	PA64
96	LN0603YP4	6	3	2.2 †	20m	60m	20m		590n	15m†	10m			CA		None	PA64
97	DBS040G	6	5	2.8	20m	450m	30m		565n	8.0m	20m			XX	Flush Mountable	ED6-1	PA113
98	LN0603GP3	6	5	2.2 †	20m	60m	20m		565n	15m†	10m			BD		None	PA64
99	LTL2620HR	8	2	2.8	20m	75m	25m		630n	3.2m	10m			CA	RYG;Rect	None	PA79
100	TDAR8100	8	2	3.0	20m	600m	25m	48%	635n	4.0m	10m		100		10x20mm Bar Displays	None	PA97
101	HLMP2620	8	2	2.6		135m			635n	8.0m				XX	.35x.35 inch	None	PS225E
102	HLMP2635	8	2	2.6	20m	135m	90m		635n	9.0m	20m			CA	2 seg x 4 elem	None	PS225F
103	LTL2685HR	8	2	2.8	20m	75m	25m		630n	14m	10m			CA	RYG;Rect	None	PA97
104	HLMP2685	8	2	2.6	20m	135m	90m		635n	9.0	20m			CA	X-Y Stackable	None	PS225D
105	HLMP2670	8	2	2.6	20m	135m	90m		635n	18.0	20m			CA	2 seg x 4 elem	None	PS225C
106	MU02-9301	8	25	2.2 †	20m	250m	30m	48	555n	12m†	20m					None	PA161
107	MU08-9301	8	25	2.2 †	20m	250m	25m	48	555n	20m†	20m					None	PA163a
108	YLB2720(A)	8	3	2.6	20m	85m#	25m	48%	583n	6.0m†	20m			CA	X-Y Stackable	None	PA97 ☑
109	GLB2820(A)	8	3	2.6	20m	135m#	30m	48%	565n	10m†	20m			CA	X-Y Stackable	None	PA97 ☑
110	OLB2620(A)	8	3	2.6	20m	135m#	30m	48%	635n	10m†	20m			CA	X-Y Stackable	None	PA97 ☑

SYMBOLS AND CODES EXPLAINED IN INTERPRETER

4. LED & IRED ARRAYS - Light Bar (Cont'd)

IN ORDER OF TYPE AND: (1) NO OF ELEMENTS (2) COLOR & (3) TYPE NUMBER

LINE No.	3 TYPE NUMBER	1 NO. OF ELEM	2 COLOR	MAX FWD VOLTAGE VF (V)	IF TEST (A)	PD RATED MAX (W)	IF RATED MAX (A)	TEMP RNG. CODE - +	PEAK WAVE LGTH λp (m)	LUMINOUS INTENSITY (MIN) Iv (cd)	IF TEST (A)	MIN RADIAT PWR Po (W)	BEAM ANGLE θHI (°)	MAT	FEATURES	SCHE-MATIC	DRAWING
1	OLB2685(A)	8	3	2.6	20m	135m#	30m	48%	635n	40m†	20m			CA	X-Y Stackable	None	PA79 ☑
2	LTL2720Y	8	4	2.8	20m	60m	20m		585n	2.8m	10m			CA	RYG;Rect	None	PA79
3	HLMP2720	8	4	2.6	20m	85m	60m		583n	4.0m	20m			CA	4 seg x 2 elem	None	PS225F
4	TDAY8100	8	4	3.0	20m	600m	25m	48%	585n	4.0m	10m		100		10x20mm Bar Displays	None	PA97
5	HLMP2735	8	4	2.6		92m			583n	12m				XX	.75X.40 inch	None	PS225F
6	HLMP2770	8	4	2.6		92m			583n	12m				XX	.75x.40 inch	None	PS225D
7	LTL2785Y	8	4	2.8	20m	60m	20m		585n	12m	10m			CA	RYG;Rect	None	PA97
8	HLMP2785	8	4	2.6	20m	85m	60m		583n	16m	20m			CA	1 seg x 8 elem	None	PS225C
9	YLB2785(A)	8	4	2.6	20m	135m#	25m	48%	583n	24m†	20m			CA	X-Y Stackable	None	PA79 ☑
10	LTL2820G	8	5	2.8	20m	75m	25m		565n	3.2m	10m			BD	RYG;Rect	None	PA79
11	HLMP2820	8	5	2.6	20m	135m	90m		565n	3.7m	20m			BD	4 seg x 2 elem	None	PS225E
12	TDAG8100	8	5	3.0	20m	600m	25m	48%	565n	6.3m	10m		100		10x20mm Bar Displays	None	PA97
13	HLMP2835	8	5	2.6	20m	135m	90m		565n	7.5m	20m			BD	2 seg x 4 elem	None	PS225F
14	HLMP2870	8	5	2.6	20m	135m	90m		565n	7.5m	20m			BD	2 seg x 4 elem	None	PS225A
15	LN0801WP23	8	5	2.2 †	20m	60m	20m		565n	8m†	10m			BD		None	PA65
16	LTL2885G	8	5	2.8	20m	75m	25m		565n	14m	10m			BD	RYG;Rect	None	PA97
17	HLMP2885	8	5	2.6		135m			565n	20m				XX	.75x.40 inch	None	PS225C
18	GLB2885(A)	8	5	2.6	20m	135m#	30m	48%	565n	40m†	20m			BD	X-Y Stackable	None	PA79 ☑
DISPLAY, LED BAR GRAPH																	
22	LN02202P	2	2	2.1 †	20m	70m	25m		700n	0.5m†	15m			BD		None	PD443 △
23	LDR462	2	2	2.0	20m	85m#	35m	5A%	660n	600u	20m		100	CA	Values are per Diode	None	PD1047 ☑
24	2RAR3005XXX	2	2	2.0	20m	100m#	200m§		655n	3.5m†	20m			XX	Right Angle Bar	None	PA135a
25	2RAR3010XXX	2	2	2.8	20m	105m#	300m§		635n	7.0m†	10m			XX	Right Angle Bar	None	PA135a
26	2RAR3009XXX	2	2	2.8	20m	105m#	300m§		635n	25m†	10m			XX	Right Angle Bar	None	PA135a
27	LN02402P	2	3	2.1 †	20m	90m	30m		590n	1.5m†	20m			CA		None	PD443 △
28	2RAY3013XXX	2	4	2.8	20m	105m#	300m§		585n	7.0m†	10m			XX	Right Angle Bar	None	PA135a
29	2RAY3014XXX	2	4	2.8	20m	105m#	300m§		585n	25m†	10m			XX	Right Angle Bar	None	PA135a
30	LDG472	2	5	2.4 †	20m	85m#	25m	38%	560n	600u	20m		100	BD	Clear Lens	None	PD1047 ☑
31	LN02302P	2	5	2.2 †	20m	90m	25m		565n	1.5m†	20m			BD		None	PD443 △
32	2RAG3011XXX	2	5	2.8	20m	105m#	300m§		565n	7.0m†	10m			XX	Right Angle Bar	None	PA135a
33	2RAG3012XXX	2	5	2.8	20m	105m#	300m§		565n	25m†	10m			XX	Right Angle Bar	None	PA135a
34	LN03202P	3	2	2.1 †	20m	70m	25m		700n	0.5m†	15m			BD		None	PD443 △
35	LDR463	3	2	2.0	20m	85m#	35m	38%	660n	600u	20m		100	CA	Values are per diode	None	PD1047 ☑
36	3RAR3005XXX	3	2	2.0	20m	100m#	200m§		655n	3.5m†	20m			XX	Right Angle Bar	None	PA135a
37	3RAR3010XXX	3	2	2.8	20m	105m#	300m§		635n	7.0m†	10m			XX	Right Angle Bar	None	PA135a
38	3RAR3009XXX	3	2	2.8	20m	105m#	300m§		635n	25m†	10m			XX	Right Angle Bar	None	PA135a
39	LN03402P	3	3	2.1 †	20m	90m	30m		590n	1.5m†	20m			CA		None	PD443 △
40	3RAY3013XXX	3	4	2.8	20m	105m#	300m§		585n	7.0m†	10m			XX	Right Angle Bar	None	PA135a
41	3RAY3014XXX	3	4	2.8	20m	105m#	300m§		585n	25m†	10m			XX	Right Angle Bar	None	PA135a
42	LDG473	3	5	2.4 †	20m	85m#	25m	38%	560n	600u	20m		100	BD	Clear Lens	None	PD1047 ☑
43	LN03302P	3	5	2.2 †	20m	90m	25m		565n	1.5m†	20m			BD		None	PD443 △
44	3RAG3011XXX	3	5	2.8	20m	105m#	300m§		565n	7.0m†	10m			XX	Right Angle Bar	None	PA135a
45	3RAG3012XXX	3	5	2.8	20m	105m#	300m§		565n	25m†	10m			XX	Right Angle Bar	None	PA135a
46	4RAG3011XXX	4		2.8	20m	105m#	300m§		565n	7.0m†	10m			XX	Right Angle Bar	None	PA135a
47	LTL503-14	4	2	2.0	20m	80m	40m		655n	300u	10m		60		Binary Display	None	PA100
48	LAH3800	4	2	1.6 †	10m				655n	500u	20m		80	CA		None	PA116
49	LAH3801	4	2	2.0 †	10m				700n	500u	20m		80	CA		None	PA116
50	LN04202P	4	2	2.1 †	20m	70m	25m		700n	0.5m†	15m			BD		None	PD443 △
51	555-4007	4	2	6.0					650n	600u	20m			XX		None	PS204
52	LDR464	4	2	2.0	20m	85m#	35m	5A%	660n	600u	20m		100	CA	Values are per Diode	None	PD1047 ☑
53	530-0404-004	4	2	2.0	20m	120m	50m		665n	0.8m	20m					None	PA108
54	555-4003	4	2	6.0					650n	1.2m	20m			XX		None	PS204
55	555-4004	4	2						650	2.0m	20m					None	PS204
56	HLMP1301-104	4	2	3.0	10m	135m	30m		635n	2.0m	10m		60	EB	Right Angle Array	None	PD1343
57	550-2404-004	4	2	3.0	10m	105m	35m		635n	3.0m	10m					None	PA108a
58	550-2405-004	4	2	3.0	10m	105m	35m		635n	3.0m	10m					None	PA107a
59	550-2406-004	4	2	3.0	10m	105m	35m		635n	3.0m	10m					None	PS205a
60	555-4001	4	2	2.0	20m				650n	3.0m	20m			XX		None	PS204
61	4RAR3005XXX	4	2	2.0	20m	100m#	200m§		655n	3.5m†	20m			XX	Right Angle Bar	None	PA135a
62	4RAR3010XXX	4	2	2.8	20m	105m#	300m§		635n	7.0m†	10m			XX	Right Angle Bar	None	PA135a
63	550-5104-004	4	2	2.0	20m	100m	50m		660n	20m	20m		70			None	PA108
64	550-5105-004	4	2	2.0	20m	100m	50m		660n	20m	20m		70			None	PA107
65	550-5106-004	4	2	2.0	20m	100m	50m		660n	20m	20m		70			None	PS205
66	4RAR3009XXX	4	2	2.8	20m	105m#	300m§		635n	25m†	10m			XX	Right Angle Bar	None	PA135a
67	550-5504-004	4	2	2.5	20m	100m	50m		660n	80m	20m		30			None	PA108
68	550-5505-004	4	2	2.5	20m	100m	50m		660n	80m	20m		30			None	PA107
69	550-5506-004	4	2	2.5	20m	100m	50m		660n	80m	20m		30			None	PS205
70	LAH3804	4	3	2.0 †	10m				635n	600u	20m		80	CA		None	PA116
71	LN04402P	4	3	2.1 †	20m	90m	30m		590n	1.5m†	20m			CA		None	PD443 △
72	550-5404-004	4	3	2.0	20m	125m	50m		605n	16m	20m		45			None	PA108
73	550-5405-004	4	3	2.0	20m	125m	50m		605n	16m	20m		45			None	PA107
74	550-5406-004	4	3	2.0	20m	125m	50m		605n	16m	20m		45			None	PS205
75	550-5804-004	4	3	2.5	20m	125m	50m		605n	60m	20m		20			None	PA108
76	550-5805-004	4	3	2.5	20m	125m	50m		605n	60m	20m		20			None	PA107
77	550-5806-004	4	3	2.5	20m	125m	50m		605n	60m	20m		20			None	PS205
78	LAH3803	4	4	2.0 †	10m				585n	500u	20m		80	CA		None	PA116
79	555-4403	4	4	5.0	6.7m		6.7m		583n	0.6m						None	PS204
80	LTL553-14	4	4	2.8	20m	60m	20m		585n	1.1m	10m		60		Bin Display	None	PA100
81	550-0304-004	4	4	3.0	20m	120m	50m		570n	1.6m	20m					None	PA108
82	555-4401	4	4	3.0	20m		25m		583n	2.0m	20m					None	PS204
83	HLMP1401-104	4	4	3.0	10m	85m	20m		583n	2.0m	10m		60	EB	Right Angle Array	None	PD1343
84	550-2304-004	4	4	3.0	10m	105m	35m		585n	2.2m	10m					None	PA108a
85	550-2305-004	4	4	3.0	10m	105m	35m		585n	2.2m	10m					None	PA107a
86	550-2306-004	4	4	3.0	10m	105m	35m		585n	2.2m	10m					None	PS205a
87	4RAY3013XXX	4	4	2.8	20m	105m#	300m§		585n	7.0m†	10m			XX	Right Angle Bar	None	PA135a
88	4RAY3014XXX	4	4	2.8	20m	105m#	300m§		585n	25m†	10m			XX	Right Angle Bar	None	PA135a
89	550-5304-004	4	4	2.5	20m	125m	50m		570n	30m	20m		50			None	PA108
90	550-5305-004	4	4	2.5	20m	125m	50m		570n	30m	20m		50			None	PA107
91	550-5306-004	4	4	2.5	20m	125m	50m		570n	30m	20m		50			None	PS205
92	550-5704-004	4	4	2.5	20m	125m	50m		570n	80m	20m		25			None	PA108
93	550-5705-004	4	4	2.5	20m	125m	50m		570n	80m	20m		25			None	PA107
94	550-5706-004	4	4	2.5	20m	125m	50m		570n	80m	20m		25			None	PS205
95	555-4303	4	5	5.0	6.7m		6.7m		565n	0.5m						None	PS204
96	LAH3802	4	5	2.0 †	10m				567n	500u	20m		80	CA		None	PA116
97	LDG474	4	5	2.4 †	20m	85m#	25m	38%	560n	600u	20m		100	BD	Clear Lens	None	PD1047 ☑
98	555-4301	4	5	3.0	20m		25m		565n	1.0m	20m					None	PS204
99	HLMP1503-104	4	5	3.0	10m	135m	30m		565n	1.0m	10m		60	BD	Right Angle Array	None	PD1343
100	LN04302P	4	5	2.2 †	20m	90m	25m		565n	1.5m†	20m			BD		None	PD443 △
101	550-0204-004	4	5	3.0	20m	120m	50m		565n	1.6m	20m					None	PA108
102	550-0206-004	4	5	3.0	20m	120m	50m		565n	1.6m	20m			XX		None	PS205
103	550-0306-004	4	5	3.0	20m	120m	50m		580n	1.6m	20m			XX		None	PS205
104	LTL533-14	4	5	2.8	20m	100m	30m		565n	1.7m	10m		60		Binary Display	None	PA100
105	550-2204-004	4	5	3.0	20m	105m	35m		565n	2.2m	20m					None	PA108a
106	550-2205-004	4	5	3.0	20m	105m	35m		565n	2.2m	20m					None	PA107a
107	550-2206-004	4	5	3.0	20m	105m	35m		565n	2.2m	20m					None	PS205a
108	550-5204-004	4	5	2.5	20m	125m	50m		555n	8.0m	20m		50			None	PA108
109	550-5205-004	4	5	2.5	20m	125m	50m		555n	8.0m	20m		50			None	PA107
110	550-5206-004	4	5	2.5	20m	125m	50m		555n	8.0m	20m		50			None	PS205

SYMBOLS AND CODES EXPLAINED IN INTERPRETER

4. LED & IRED ARRAYS - Bar Graph Display (Cont'd)

IN ORDER OF TYPE AND: (1) NO OF ELEMENTS (2) COLOR & (3) TYPE NUMBER

LINE No.	3 TYPE NUMBER	1 NO. OF ELEM	2 COLOR	MAX FWD VOLTAGE VF (V)	IF TEST (A)	PD RATED MAX (W)	IF RATED MAX (A)	TEMP RNG. CODE - +	PEAK WAVE LGTH λp (m)	LUMINOUS INTENSITY (MIN) Iv (cd)	IF TEST (A)	MIN RADIAT PWR Po (W)	BEAM ANGLE θHI (°)	MAT	FEATURES	SCHE-MATIC	DRAWING
1	4RAG3012XXX	4	5	2.8	20m	105m#	300m§		565n	25m†	10m			XX	Right Angle Bar	None	PA135a
2	550-5604-004	4	5	2.5	20m	125m	50m		555n	50m	20m		25			None	PA108
3	550-5605-004	4	5	2.5	20m	125m	50m		555n	50m	20m		25			None	PA107
4	550-5606-004	4	5	2.5	20m	125m	50m		555n	50m	20m		25			None	PS205
5	550-0406-004	4	5	2.0	20m	120m	50m		665n	800m	20m			XX		None	PS205
6	LTA8051P	5	2	2.8	20m	2.4	30m		697n	120u	10m			BD	Rect	None	PA133
7	D610P	5	2			400m	26m	28%		150u			60		Integrated Driver	None	PY1027
8	GL105R11	5	2	2.5	5.0m	25m	10m		695n	150u	5.0m			EA	Values/Element	None	PA52
9	SLA1101	5	2	1.9 †	5.0m	100m	15m		700n	150u†	5.0m			BD	Com An	None	PA136
10	TLR8051	5	2	2.1		60m	20m		700n	150u				XX		None	None
11	GL105R5	5	2	2.3	5.0m	23m	10m		695n	200u	5.0m			EA	Values/Element	None	PA50
12	SLP169B	5	2	1.9 †	5.0m	70m	25m		700n	200u†	5.0m			BD		None	PD1322
13	TLR208-5	5	2	2.8	20m	56m#	20m	27	700n	300u	15m			BD		ED5-1	PA167a
14	LAH1201	5	2	2.0 †	10m				700n	400u	20m			CA		None	PA117
15	LAH1202	5	2	1.6 †	10m				655n	400u	20m			CA		None	PA117
16	LAH1300	5	2	1.6 †	10m				655n	400u	20m			CA		None	PA118
17	LAH1301	5	2	2.0 †	10m				700n	400u	20m			CA		None	PA118
18	LAH1600	5	2	1.6 †	10m				655n	400u	20m			CA		None	PA120
19	LAH1605	5	2	2.0 †	10m				700n	400u	20m			CA		None	PA120
20	LN05201P	5	2	2.1 †	20m	70m	25m		700n	0.4m†	15m			BD		None	PA58
21	SLP166B	5	2	1.9 †	5.0m	70m	25m		700n	400u†	5.0m			BD		None	PD1320
22	TLR205-5	5	2	2.8	20m	56m#	20m	27	700n	400u	15m			BD		ED5-1	PA167
23	HLMP6205	5	2	2.0	10m	100m	50m		655n	500u	10m		45	CA	Matched	None	PA42b ⊠
24	LN05103P	5	2	2.1 †	20m	70m	25m		700n	0.5m†	15m			BD		None	PA62 △
25	LN05202P	5	2	2.1 †	20m	70m	25m		700n	0.5m†	15m			BD		None	PD443 △
26	LN05203P	5	2	2.1 †	20m	70m	25m		700n	0.5m†	15m			BD		None	PA62
27	MLH5S	5	2	2.0	10m				700n	500u	10m			BD	Twin 5-Element Bars	None	PY979
28	SLP152B	5	2	1.9 †	5.0m	70m	25m		700n	500u†	5.0m			BD		None	PD1319
29	SLP167B	5	2	1.9 †	5.0m	70m	25m		700n	500u†	5.0m			BD		None	PD1321
30	SLP172B	5	2	1.9 †	5.0m	70m	25m		700n	500u†	5.0m			BD		None	PD1323
31	LDR4555	5	2	2.0	20m	85m#	35m	5A%	665n	800u	10m		40	CA	Values are per Diode	None	PA146 ⊠
32	HLMP6655	5	2	3.0	10m	120m	30m		635n	1.0m	10m		80	CA	Matched	None	PA42
33	HLMP6755	5	2	3.0	10m	120m	30m		635n	1.0m	10m		80	CA	Matched	None	PA42
34	5RAR3005XXX	5	2	2.0	20m	100m#	200m§		655n	3.5m†	20m			XX	Right Angle Bar	None	PA135a
35	5RAR3010XXX	5	2	2.8	20m	105m#	300m§		635n	7.0m†	10m			XX	Right Angle Bar	None	PA135a
36	5RAR3009XXX	5	2	2.8	20m	105m#	300m§		635n	25m†	10m			XX	Right Angle Bar	None	PA135a
37	TLM8051	5	25	2.1		60m	20m			150u					Red - Green	None	None
38	SLA5101-02	5	25	2.0 †	15m	200m	20m		565n	200u†	15m			BD	Com An	None	PA136
39	LAH1204	5	3	2.0 †	10m				635n	500u	20m			CA		None	PA117
40	LAH1311	5	3	2.0 †	10m				635n	500u	20m			CA		None	PA118
41	LAH1607	5	3	2.0 †	10m				635n	500u	20m			CA		None	PA120
42	LN05401P	5	3	2.1 †	20m	90m	30m		590m	1.2m†	20m			CA		None	PA58
43	LN05402P	5	3	2.1 †	20m	90m	30m		590n	1.5m†	20m			CA		None	PD443 △
44	GL105H5	5	4	2.5	10m	50m	20m		585n	200u	10m			XX	Bar Graph Display	None	PA50
45	GL105H11	5	4	2.5	10m	50m	20m		585n	200u	10m			XX	Bar Graph Display	None	PA52
46	LAH1203	5	4	2.0 †	10m				585n	400u	20m			CA		None	PA117
47	LAH1303	5	4	2.0 †	10m				585n	400u	20m			CA		None	PA118
48	LAH1606	5	4	2.0 †	10m				585n	400u	20m			CA		None	PA120
49	MLH5Y	5	4	2.0	10m				585n	500u	10m			BD	Twin 5-Element Bars	None	PY979
50	TLY205-5	5	4	2.8	20m	70m#	25m	27	585n	500u	15m			CA		ED5-1	PA167
51	TLY208-5	5	4	2.8	20m	70m#	25m	27	585n	500u	15m			CA		ED5-1	PA167a
52	SLP467B	5	4	2.1 †	20m	70m	25m		585n	0.6m†	20m			CA		None	PD1321
53	SLP452B	5	4	2.1 †	20m	70m	25m		585n	1.5m†	20m			CA		None	PD1319
54	SLP466B	5	4	2.1 †	20m	70m	25m		585n	1.5m†	20m			CA		None	PD1320
55	5RAY3013XXX	5	4	2.8	20m	105m#	300m§		585n	7.0m†	10m			XX	Right Angle Bar	None	PA135a
56	5RAY3014XXX	5	4	2.8	20m	105m#	300m§		585n	25m†	10m			XX	Right Angle Bar	None	PA135a
57	GL105G11	5	5	2.5	10m	38m	15m		555n	80u	10m			XX	Bar Graph Display	None	PA52
58	TLG8101	5	5	2.1		60m	20m		567n	150u				XX		None	None
59	GL105M11	5	5	2.5	10m	38m	15m		565n	200u	10m			XX	Bar Graph Display	None	PA52
60	GL105N11	5	5	2.5	10m	38m	15m		565n	200u	10m			XX	Bar Graph Display	None	PA52
61	SLA2101	5	5	2.0 †	15m	200m	20m		565n	200u†	15m			BD	Com An	None	PA136
62	LAH1200	5	5	2.0 †	10m				567n	400u	20m			CA		None	PA117
63	LAH1302	5	5	2.0 †	10m				567n	400u	20m			CA		None	PA118
64	LAH1601	5	5	2.0 †	10m				567n	400u	20m			CA		None	PA120
65	LTA8051G	5	5	2.8	20m	2.4	30m		565n	450u	10m			BD	Rect	None	PA133
66	LTA8051M	5	5	2.8	20m	2.4	30m		565n	450u	10m			BD	Rect	None	PA133
67	GL105N5	5	5	2.8	20m	85m	30m		565n	500u	20m			XX	Bar Graph Display	None	PA50
68	MLH5G	5	5	2.0	10m				565n	500u	10m			BD	Twin 5-Element Bars	None	PY979
69	TLG208-5	5	5	2.8	20m	70m#	25m	27	565n	500u	15m			BD		ED5-1	PA167a
70	SLP267B	5	5	2.1 †	20m	70m	25m		565n	600u†	20m			BD		None	PD1321
71	SLP252B	5	5	2.1 †	20m	70m	25m		565n	700u†	20m			BD		None	PD1319
72	SLP266B	5	5	2.1 †	20m	70m	25m		565n	700u†	20m			BD		None	PD1320
73	HLMP6855	5	5	3.0	10m	120m	30m		565n	1.0m	10m		70	CA	Matched	None	PA42
74	LN05301P	5	5	2.2 †	20m	90m	30m		565n	1.0m†	20m			BD		None	PA58
75	TLG205-5	5	5	2.8	20m	70m#	25m	27	565n	1.0m	15m			BD		ED5-1	PA167
76	SLP269B	5	5	2.1 †	20m	70m	25m		565n	1.2m†	20m			BD		None	PD1322
77	SLP272B	5	5	2.1 †	20m	70m	25m		565n	1.2m†	20m			BD		None	PD1323
78	LN05302P	5	5	2.2 †	20m	90m	25m		565n	1.5m†	20m			BD		None	PD443 △
79	5RAG3011XXX	5	5	2.8	20m	105m#	300m§		565n	7.0m†	10m			XX	Right Angle Bar	None	PA135a
80	5RAG3012XXX	5	5	2.8	20m	105m#	300m§		565n	25m†	10m			XX	Right Angle Bar	None	PA135a
81	GL106R5	6	2	2.3	5.0m	23m	10m		695n	200u	5.0m			EA		None	PA51
82	HLMP6206	6	2	2.0	10m	100m	50m		655n	.50m	10m		45	CA	Matched	None	PA42
83	LN06202P	6	2	2.1 †	20m	70m	25m		700n	0.5m†	15m			BD		None	PD443 △
84	HLMP6656	6	2	3.0	10m	120m	30m		635n	1.0m	10m		80	CA	Matched	None	PA42
85	6RAR3005XXX	6	2	2.0	20m	100m#	200m§		655n	3.5m†	20m			XX	Right Angle Bar	None	PA135a
86	6RAR3010XXX	6	2	2.8	20m	105m#	300m§		635n	7.0m†	10m			XX	Right Angle Bar	None	PA135a
87	SLF104B	6	2	2.0 †	10m	210m	30m		700n	8.5m†				BD		None	PD1334
88	LTJ811HR	6	2	2.8	20m	75m	25m		635n	11m	10m			CA	RYG;Stkbl	None	PA128
89	6RAR3009XXX	6	2	2.8	20m	105m#	300m§		635n	25m†	10m			XX	Right Angle Bar	None	PA135a
90	LN06402P	6	3	2.1 †	20m	90m	30m		590n	1.5m†	20m			CA		None	PD443 △
91	GL106H5	6	4	2.5	10m	50m	20m		585n	200u	10m			EB		None	PA51
92	HLMP6756	6	4	3.0	10m	120m	20m		583n	1.0m	10m		90	CA	Matched	None	PA42
93	6RAY3013XXX	6	4	2.8	20m	105m#	300m§		585n	7.0m†	10m			XX	Right Angle Bar	None	PA135a
94	LTJ811Y	6	4	2.8	20m	60m	20m		585n	9.0m	10m			CA	RYG;Stkbl	None	PA128
95	6RAY3014XXX	6	4	2.8	20m	105m#	300m§		585n	25m†	10m			XX	Right Angle Bar	None	PA135a
96	GL106M5	6	5	2.8	20m	85m	30m		565n	500u	20m			BD	Values/Element	None	PA51
97	GL106N5	6	5	2.8	20m	85m	30m		565n	500u	20m			BD	Values/Element	None	PA51
98	HLMP6856	6	5	3.0	10m	120m	30m		565n	1.0m	10m		70	CA	Matched	None	PA42
99	LN06302P	6	5	2.2 †	20m	90m	25m		565n	1.5m†	20m			BD		None	PD443 △
100	6RAG3011XXX	6	5	2.8	20m	105m#	300m§		565n	7.0m†	10m			XX	Right Angle Bar	None	PA135a
101	LTJ811G	6	5	2.8	20m	75m	25m		565n	11m	10m			BD	RYG;Stkbl	None	PA128
102	SLF204B	6	5	2.2 †	20m	210m	30m		565n	17.0m†				BD		None	PD1334
103	6RAG3012XXX	6	5	2.8	20m	105m#	300m§		565n	25m†	10m			XX	Right Angle Bar	None	PA135a
104	GL107R12	7	2	2.5	5.0m	25m	10m		695n	150u	5.0m			XX	Bar Graph Display	None	PA53
105	LN07202P	7	2	2.1 †	20m	70m	25m		700n	0.5m†	15m			BD		None	PD443 △
106	LAB2010	7	2	1.6 †	10m	110m	20m		655n	600u	10m			CA		None	PA123
107	LAB2011	7	2	1.9 †	10m	120m	20m		695n	3.4m	10m			BD		None	PA123
108	7RAR3005XXX	7	2	2.0	20m	100m#	200m§		655n	3.5m†	20m			XX	Right Angle Bar	None	PA135a
109	7RAR3010XXX	7	2	2.8	20m	105m#	300m§		635n	7.0m†	10m			XX	Right Angle Bar	None	PA135a
110	7RAR3009XXX	7	2	2.8	20m	105m#	300m§		635n	25m†	10m			XX	Right Angle Bar	None	PA135a

SYMBOLS AND CODES EXPLAINED IN INTERPRETER

4. LED & IRED ARRAYS - Bar Graph Display (Cont'd)

IN ORDER OF TYPE AND: (1) NO OF ELEMENTS (2) COLOR & (3) TYPE NUMBER

LINE No.	3 TYPE NUMBER	1 NO. OF ELEM	2 COLOR	MAX FWD VOLTAGE VF (V)	IF TEST (A)	PD RATED MAX (W)	IF RATED MAX (A)	TEMP RNG. CODE - +	PEAK WAVE LGTH λp (m)	LUMINOUS INTENSITY (MIN) Iv (cd)	IF TEST (A)	MIN RADIAT PWR Po (W)	BEAM ANGLE θHI (°)	MAT	FEATURES	SCHE-MATIC	DRAWING
1	LN07402P	7	3	2.1 †	20m	90m	30m		590n	1.5m†	20m			CA		None	PD443 Δ
2	LAB2014	7	3	2.0 †	10m	115m	20m		635n	3.4m	10m			CA		None	PA123
3	GL107H12	7	4	2.5	10m	50m	20m		585n	200u	10m			EB	Bar graph	None	PA53
4	LAB2013	7	4	2.0 †	10m	115m	20m		585n	2.4m	10m			CA		None	PA123
5	7RAY3013XXX	7	4	2.8	20m	105m#	300m§		585n	7.0m†	10m			XX	Right Angle Bar	None	PA135a
6	7RAY3014XXX	7	4	2.8	20m	105m#	300m§		585n	25m†	10m			XX	Right Angle Bar	None	PA135a
7	GL107G12	7	5	2.5	10m	38m	15m		555n	80u	10m			BD	bar graph	None	PA53
8	GL107S12	7	5	2.5	10m	38m	15m		555n	80u	10m			BD	Bar Graph	None	PA53
9	GL107N12	7	5	2.5	10m	38m	15m		565n	200u	10m			BD	bar graph	None	PA53
10	LN07302P	7	5	2.2 †	20m	90m	25m		565n	1.5m†	20m			BD		None	PD443 Δ
11	LAB2012	7	5	2.0 †	10m	115m	20m		565n	3.1m	10m			CA		None	PA123
12	7RAG3011XXX	7	5	2.8	20m	105m#	300m§		565n	7.0m†	10m			XX	Right Angle Bar	None	PA135a
13	7RAG3012XXX	7	5	2.8	20m	105m#	300m§		565n	25m†	10m			XX	Right Angle Bar	None	PA135a
14	MLI8S	8	2	2.0	10m				700n	350u	10m			BD	Twin 8-Element Bars	None	PY978
15	HLMP6208	8	2	2.0	10m	100m	50m		655n	.50m	10m		45	CA	Matched	None	PA42
16	HLMP6658	8	2	3.0	10m	120m	30m		635n	1.0m	10m		80	CA	Matched	None	PA42
17	8RAR3005XXX	8	2	2.0	20m	100m#	200m§		655n	3.5m†	20m			XX	Right Angle Bar	None	PA135a
18	8RAR3010XXX	8	2	2.8	20m	105m#	300m§		635n	7.0m†	10m			XX	Right Angle Bar	None	PA135a
19	8RAR3009XXX	8	2	2.8	20m	105m#	300m§		635n	25m†	10m			XX	Right Angle Bar	None	PA135a
20	MLI8Y	8	4	2.0	10m				585n	500u	10m			BD	Twin 8-Element Bars	None	PY978
21	HLMP6758	8	4	3.0	10m	120m	20m		583n	1.0m	10m		90	CA	Matched	None	PA42
22	8RAY3013XXX	8	4	2.8	20m	105m#	300m§		585n	7.0m†	10m			XX	Right Angle Bar	None	PA135a
23	8RAY3014XXX	8	4	2.8	20m	105m#	300m§		585n	25m†	10m			XX	Right Angle Bar	None	PA135a
24	MLI8G	8	5	2.0	10m				565n	500n	10m			BD	Bar Graph;2X8	None	PY978
25	HLMP6858	8	5	3.0	10m	120m	30m		565n	1.0m	10m		70	CA	Matched	None	PA42
26	8RAG3011XXX	8	5	2.8	20m	105m#	300m§		565n	7.0m†	10m			XX	Right Angle Bar	None	PA135a
27	8RAG3012XXX	8	5	2.8	20m	105m#	300m§		565n	25m†	10m			XX	Right Angle Bar	None	PA135a
28	LAB4010	9	2	1.6 †	10m	110m	20m		655n	600u	10m			CA		None	PA125
29	LAB4110	9	2	1.6 †	10m	110m	20m		655n	600u	10m			CA		None	PA126
30	LAB4011	9	2	1.9 †	10m	120m	20m		695n	3.4m	10m			BD		None	PA125
31	LAB4111	9	2	1.9 †	10m	120m	20m		695n	3.4m	10m			BD		None	PA126
32	9RAR3005XXX	9	2	2.0	20m	100m#	200m§		655n	3.5m†	20m			XX	Right Angle Bar	None	PA135a
33	9RAR3010XXX	9	2	2.8	20m	105m#	300m§		635n	7.0m†	10m			XX	Right Angle Bar	None	PA135a
34	9RAR3009XXX	9	2	2.8	20m	105m#	300m§		635n	25m†	10m			XX	Right Angle Bar	None	PA135a
35	SLA1131	9	2	1.9 †	5.0m	300m	15m		700n	150 †	5.0m			BD	Com An	None	PA137
36	LAB4014	9	3	2.0 †	10m	115m	20m		635n	3.4m	10m			CA		None	PA125
37	LAB4114	9	3	2.0 †	10m	115m	20m		635n	3.4m	10m			CA		None	PA126
38	LAB4013	9	4	2.0 †	10m	115m	20m		585n	2.4m	10m			CA		None	PA125
39	LAB4113	9	4	2.0 †	10m	115m	20m		585n	2.4m	10m			CA		None	PA126
40	9RAY3013XXX	9	4	2.8	20m	105m#	300m§		585n	7.0m†	10m			XX	Right Angle Bar	None	PA135a
41	9RAY3014XXX	9	4	2.8	20m	105m#	300m§		585n	25m†	10m			XX	Right Angle Bar	None	PA135a
42	LAB4012	9	5	2.0 †	10m	115m	20m		565n	3.1m	10m			CA		None	PA125
43	LAB4112	9	5	2.0 †	10m	115m	20m		565n	3.1m	10m			CA		None	PA126
44	9RAG3011XXX	9	5	2.8	20m	105m#	300m§		565n	7.0m†	10m			XX	Right Angle Bar	None	PA135a
45	9RAG3012XXX	9	5	2.8	20m	105m#	300m§		565n	25m†	10m			XX	Right Angle Bar	None	PA135a
46	SLA2131	9	5	2.0 †	15m	300m	20m		565n	300 †	10m			BD	Com An	None	None
47	TLM8101	10		2.1		60m	20m			150u					Green/Red	None	None
48	TLM8102	10		2.1		60m	20m			150u				XX	Dual ch;grn/red	None	None
49	HDSP4832	10		2.5	10m	125m	30m			600u	10m				Red/Yellow/Green	None	PY1056
50	HDSP4836	10		2.5	10m	125m	30m			600u	10m				Red/Yellow/Green	None	PY1056
51	HDSP4840	10		2.5	20m	125m	30m		583n	600u	10m				EB Bar Graph Array	None	PY1056
52	HDSP4830	10		2.5	20m	125m	30m		635n	900u	10m			EB	Bar Graph Array	None	PY1056
53	HDSP4890	10		2.5	10m	125m	30m		556n	1.6m	10m			BD	Bar Graph Array	None	PY1056
54	LTA8102P	10	2											XX	Twin 10-Element Bars	None	PA104
55	LTA8106P	10	2											XX	Twin 10-Element Bars	None	PA105
56	LTA8108P	10	2											XX	Twin 10-Element Bars	None	PA106
57	LTG8101	10	2						630n	100u				XX		None	PS207
58	NSM3914	10	2						655n	100u	1m				Linear driver	None	PS233
59	NSM3915	10	2						655n	100u	1m			XX	Logarithmic driver	None	PS233
60	NSM3916	10	2						655n	100u	1m			XX	Internal VU Driver	None	PS233
61	NSM39151	10	2						635n	100u	1m				Logarithmic driver	FB103	PS233
62	LTA8101P	10	2	2.8	20m	2.4	30m		697n	120u	10m			BD	Rect	None	PA103
63	LTA8101W	10	2	2.8	20m	2.4	30m		697n	120u	10m			BD	Rect	None	PA103
64	D620P	10	2			800m	53m	28%		150u			60	BD	Includes driver	None	PY1028
65	D630P	10	2			800m	53m	28%		150u			60	BD	Bar Graph,w/logic	None	PY1028
66	TLR8101	10	2	2.1		60m	20m		700n	150u				XX		None	None
67	LTA1000R	10	2	2.0	20m	55m	25m		655n	200u	10m			CA	RYG;Stkbl	None	PA102
68	LTR8101	10	2				20m		700n	250u				XX		None	PS207
69	LTA1000P	10	2	2.8	20m	40m	15m		697n	300u	10m			BD	RYG;Stkbl	None	PA102
70	LAH1500	10	2	1.6 †	10m				655n	400u	20m			CA		None	PA119
71	LAH1509	10	2	2.0 †	10m				700n	400u	20m			CA		None	PA119
72	LAH1700	10	2	1.6 †	10m				655n	400u	20m			CA		None	PA121
73	LAH1701	10	2	2.0 †	10m				700n	400u	20m			CA		None	PA121
74	MLH10S	10	2	2.0	10m				700n	500u	10m					None	PY980
75	RBG1000	10	2	2.0	20m	450m	20m	28%	660n	500u†	20m			XX	End Stackable	None	PS196 ⊠
76	RBG4820	10	2	2.0	20m	125m#	30m	27%	655n	500u	20m			CA	End Stackable	None	PA76 ⊠
77	MV57164	10	2			750m	300m		562n	510u				XX	Stackable	None	None
78	LAB10	10	2	1.6 †	10m	110m	20m		655n	600u	10m			CA		None	PA102
79	LTA1000HR	10	2	2.8	20m	75m	25m		635n	800u	10m			CA	RYG;Stkbl	None	PA102
80	LAB11	10	2	1.9 †	10m	120m	20m		695n	3.4m	10m			BD		None	PA102
81	10RAR3005XXX	10	2	2.0	20m	100m#	200m§		655n	3.5m†	20m			XX	Right Angle Bar	None	PA135a
82	10RAR3010XXX	10	2	2.8	20m	105m#	200m§		635n	7.0m†	10m			XX	Right Angle Bar	None	PA135a
83	10RAR3009XXX	10	2	2.8	20m	105m#	200m§		635n	25m†	10m			XX	Right Angle Bar	None	PA135a
84	NSM39148	10	24						655n	100u	1m				Lin drvr;Grn/Ylw/Rd	FB103	PS233
85	NSM39158	10	24						655n	100u	1m				Log drvr;Grn/Ylw/Rd	FB103	PS233
86	NSM39168	10	24						655n	100u	1m				VU driver Grn/Ylw/Rd	FB103	PS233
87	NSM39146	10	25						655n	100u	1m				Linear driver	FB103	PS233
88	NSM39147	10	25						655n	100u	1m				Linear driver	FB103	PS233
89	NSM39169	10	25						655n	100u	1m				Internal VU driver	FB103	PS233
90	D634P	10	25			800m	48m	28%		150u			60		7 Gr/3 Red LED,Drivr	None	PY1028
91	CMD57164	10	3	2.5		750m	300m		630n	250n				XX	.20X.07 inch bars	None	PS260
92	LAH1512	10	3	2.0 †	10m				635n	500u	20m			CA		None	PA119
93	LAH1712	10	3	2.0 †	10m				635n	500u	20m			CA		None	PA121
94	LTA1000E	10	3	2.8	20m	75m	25m		630n	800u	10m			CA	RYG;Stkbl	None	PA102
95	OBG1000	10	3	2.8	20m	450m	20m	28%	630n	2.5m†	20m			XX	End Stackable	None	PS196 ⊠
96	OBG4830	10	3	2.5	20m	125m#	30m	27%	635n	2.5m	20m			CA	End Stackable	None	PA76 ⊠
97	LAB14	10	3	2.0 †	10m	115m	20m		635n	3.4m	10m			CA		None	PA102
98	CMD53164	10	4	2.5		750m	300m		585n	350n				XX	.20X.07 inch bars	None	PS260
99	NSM39143	10	4						585n	100u	1m				Linear driver	FB103	PS233
100	NSM39153	10	4						585n	100u	1m				Logarithmic driver	FB103	PS233
101	NSM39163	10	4						585n	100u	1m				Internal VU driver	FB103	PS233
102	LAH1511	10	4	2.0 †	10m				585n	400u	20m			CA		None	PA119
103	LAH1711	10	4	2.0 †	10m				585n	400u	20m			CA		None	PA121
104	MLH10Y	10	4	2.0	10m				585n	500u	10m					None	PY980
105	MV54164	10	4	3.0		750m	300m		585n	510u				XX	Stackable	None	PS260
106	LTA1000Y	10	4	2.8	20m	60m	20m		585n	700u	10m			CA	RYG;Stkbl	None	PA102
107	YBG1000	10	4	3.0	20m	450m	20m	28%	585n	2.0m†	20m			XX	End Stackable	None	PS196 ⊠
108	YBG4840	10	4	2.6	20m	125m#	20m	27%	583n	2.0m	20m			CA	End Stackable	None	PA76 ⊠
109	LAB13	10	4	2.0 †	10m	115m	20m		585n	2.4m	10m			CA		None	PA102
110	10RAY3013XXX	10	4	2.8	20m	105m#	200m§		585n	7.0m†	10m			XX	Right Angle Bar	None	PA135a

SYMBOLS AND CODES EXPLAINED IN INTERPRETER

4. LED & IRED ARRAYS - Bar Graph Display (Cont'd)

IN ORDER OF TYPE AND: (1) NO OF ELEMENTS (2) COLOR & (3) TYPE NUMBER

LINE No.	3 TYPE NUMBER	1 NO. OF ELEM	2 COLOR	MAX FWD VOLTAGE VF (V)	IF TEST (A)	PD RATED MAX (W)	IF RATED MAX (A)	TEMP RNG. CODE - +	PEAK WAVE LGTH λp (m)	LUMINOUS INTENSITY (MIN) Iv (cd)	IF TEST (A)	MIN RADIAT PWR Po (W)	BEAM ANGLE θHI (°)	MAT	FEATURES	SCHE-MATIC	DRAWING
1	10RAY3014XXX	10	4	2.8	20m	105m#	200m§		585n	25m†	10m			XX	Right Angle Bar	None	PA135a
2	LTA8102G	10	5											XX	Twin 10-Element Bars	None	PA104
3	LTA8106G	10	5											XX	Twin 10-Element Bars	None	PA105
4	LTA8108G	10	5											XX	Twin 10-Element Bars	None	PA106
5	AND8101R	10	5	2.5	20m				700n	250n				XX		None	PS207
6	AND8101G	10	5	2.5	20m				567n	350n				XX		None	PS207
7	NSM39142	10	5						565n	100u	1m				Linear driver	FB103	PS233
8	NSM39152	10	5						565n	100u	1m				Logarithmic driver	FB103	PS233
9	NSM39162	10	5						565n	100u	1m				Internal VU driver	FB103	PS233
10	TLG8051	10	5	2.1		60m	20m		567n	150u				XX		None	None
11	LAH1510	10	5	2.0 †	10m				567n	400u	20m			CA		None	PA119
12	LAH1710	10	5	2.0 †	10m				567n	400u	20m			CA		None	PA121
13	LTA8101G	10	5	2.8	20m	2.4	30m		565n	450u	10m			BD	Rect	None	PA103
14	LTA8101M	10	5	2.8	20m	2.4	30m		565n	450u	10m			BD	Rect	None	PA103
15	MLH10G	10	5	2.0	10m				565n	500u	10m					None	PY980
16	MV53164	10	5	3.0		750m	200m		660n	510u				XX	Stackable	None	PS260
17	LN10204P	10	5	2.1 †	20m	70m	25m		700n	0.8m†	15m			BD		None	PA59
18	LTA1000G	10	5	2.8	20m	75m	25m		565n	800u	10m			BD	RYG;Stkbl	None	PA102
19	GBG1000	10	5	3.0	20m	450m	20m	28%	565n	2.0m†	20m			XX	End Stackable	None	PS196 ☑
20	GBG4850	10	5	2.5	10m	125m#	30m	27%	566n	2.0m†	20m			BD	End Stackable	None	PA76 ☑
21	LAB12	10	5	2.0 †	10m	115m	20m		565n	3.1m	10m			CA		None	PA102
22	10RAG3011XXX	10	5	2.8	20m	105m#	200m§		565n	7.0m†	10m			XX	Right Angle Bar	None	PA135a
23	10RAG3012XXX	10	5	2.8	20m	105m#	200m§		565n	25m†	10m			XX	Right Angle Bar	None	PA135a
24	CMD54164	10	5	2.5	10m	750m	30m	48	562n	510m	10m			BD		FB139	PS260
25	11RAR3005XXX	11	2	2.0	20m	100m#	200m§		655n	3.5m†	20m			XX	Right Angle Bar	None	PA135a
26	11RAR3010XXX	11	2	2.8	20m	105m#	300m§		635n	7.0m†	10m			XX	Right Angle Bar	None	PA135a
27	11RAR3009XXX	11	2	2.8	20m	105m#	300m§		635n	25m†	10m			XX	Right Angle Bar	None	PA135a
28	11RAY3013XXX	11	4	2.8	20m	105m#	300m§		585n	7.0m†	10m			XX	Right Angle Bar	None	PA135a
29	11RAY3014XXX	11	4	2.8	20m	105m#	300m§		585n	25m†	10m			XX	Right Angle Bar	None	PA135a
30	11RAG3011XXX	11	5	2.8	20m	105m#	300m§		565n	7.0m†	10m			XX	Right Angle Bar	None	PA135a
31	11RAG3012XXX	11	5	2.8	20m	105m#	300m§		565n	25m†	10m			XX	Right Angle Bar	None	PA135a
32	GL112M13	12	2	2.5	5.0m	25m	10m		695n	150u	5.0m			EA	bar graph	None	PA55
33	GL112R9	12	2	2.5	5.0m	25m	10m		695n	150u	50m			EA	bar graph	None	PA54
34	GL112R13	12	2	2.5	5.0m	25m	10m		695n	150u	5.0m			EA	bar graph	None	PA55
35	GL112S13	12	2	2.5	5.0m	25m	10m		695n	150u	5.0m			EA	bar graph	None	PA55
36	MLA12	12	2	1.7		350m	20m		700n	280u				XX		None	PS183
37	LAH1804	12	2	1.6 †	10m				655n	400u	20m			CA		None	PA122
38	LAH1805	12	2	2.0 †	10m				700n	400u	20m			CA		None	PA122
39	LAB3010	12	2	1.6 †	10m	110m	20m		655n	800u	10m			CA		None	PA124
40	LAB3011	12	2	1.9 †	10m	120m	20m		695n	3.4m	10m			BD		None	PA124
41	12RAR3005XXX	12	2	2.0	20m	100m#	200m§		655n	3.5m†	20m			XX	Right Angle Bar	None	PA135a
42	12RAR3010XXX	12	2	2.8	20m	105m#	300m§		635n	7.0m†	10m			XX	Right Angle Bar	None	PA135a
43	12RAR3009XXX	12	2	2.8	20m	105m#	300m§		635n	25m†	10m			XX	Right Angle Bar	None	PA135a
44	LAH1808	12	3	2.0 †	10m				635n	500u	20m			CA		None	PA122
45	LAB3014	12	3	2.0 †	10m	115m	20m		635n	3.5m	10m			CA		None	PA124
46	GL112H9	12	4	2.5	10m	50m	20m		585n	200u	10m				EB bar graph	None	PA54
47	GL112H13	12	4	2.5	10m	50m	20m		585n	200u	10m			BD		None	PA55
48	LAH1807	12	4	2.0 †	10m				585n	400u	20m			CA		None	PA122
49	LAB3013	12	4	2.0 †	10m	115m	20m		585n	2.4m	10m			CA		None	PA124
50	12RAY3013XXX	12	4	2.8	20m	105m#	300m§		585n	7.0m†	10m			XX	Right Angle Bar	None	PA135a
51	12RAY3014XXX	12	4	2.8	20m	105m#	300m§		585n	25m†	10m			XX	Right Angle Bar	None	PA135a
52	GL112G9	12	5	2.5	10m	38m	15m		555n	80u	10m			BD		None	PA54
53	GL112G13	12	5	2.5	10m	38m	15m		555n	80u	10m			BD		None	PA55
54	GL112N9	12	5	2.5	10m	38m	15m		565n	200u	10m			BD		None	PA54
55	GL112N13	12	5	2.5	10m	38m	15m		565n	200u	10m			BD		None	PA55
56	GL112T13	12	5	2.5	10m	38m	15m		565n	200u	10m			BD	Values/Element	None	PA55
57	LAH1806	12	5	2.0 †	10m				567n	400u	20m			CA		None	PA122
58	LAB3012	12	5	2.0 †	10m	115m	20m		565n	3.3m	10m			CA		None	PA124
59	12RAG3011XXX	12	5	2.8	20m	105m#	300m§		565n	7.0m†	10m			XX	Right Angle Bar	None	PA135a
60	12RAG3012XXX	12	5	2.8	20m	105m#	300m§		565n	25m†	10m			XX	Right Angle Bar	None	PA135a
61	13RAR3005XXX	13	2	2.0	20m	100m#	200m§		655n	3.5m†	20m			XX	Right Angle Bar	None	PA135a
62	13RAR3010XXX	13	2	2.8	20m	105m#	300m§		635n	7.0m†	10m			XX	Right Angle Bar	None	PA135a
63	13RAR3009XXX	13	2	2.8	20m	105m#	300m§		635n	25m†	10m			XX	Right Angle Bar	None	PA135a
64	13RAY3013XXX	13	4	2.8	20m	105m#	300m§		585n	7.0m†	10m			XX	Right Angle Bar	None	PA135a
65	13RAY3014XXX	13	4	2.8	20m	105m#	300m§		585n	25m†	10m			XX	Right Angle Bar	None	PA135a
66	13RAG3011XXX	13	5	2.8	20m	105m#	300m§		565n	7.0m†	10m			XX	Right Angle Bar	None	PA135a
67	13RAG3012XXX	13	5	2.8	20m	105m#	300m§		565n	25m†	10m			XX	Right Angle Bar	None	PA135a
68	14RAR3005XXX	14	2	2.0	20m	100m#	200m§		655n	3.5m†	20m			XX	Right Angle Bar	None	PA135a
69	14RAR3010XXX	14	2	2.8	20m	105m#	300m§		635n	7.0m†	10m			XX	Right Angle Bar	None	PA135a
70	14RAR3009XXX	14	2	2.8	20m	105m#	300m§		635n	25m†	10m			XX	Right Angle Bar	None	PA135a
71	14RAY3013XXX	14	4	2.8	20m	105m#	300m§		585n	7.0m†	10m			XX	Right Angle Bar	None	PA135a
72	14RAY3014XXX	14	4	2.8	20m	105m#	300m§		585n	25m†	10m			XX	Right Angle Bar	None	PA135a
73	14RAG3011XXX	14	5	2.8	20m	105m#	300m§		565n	7.0m†	10m			XX	Right Angle Bar	None	PA135a
74	14RAG3012XXX	14	5	2.8	20m	105m#	300m§		565n	25m†	10m			XX	Right Angle Bar	None	PA135a
75	TLM8152	15		2.1		60m	20m			150u				XX	Dual ch;grn/red	None	None
76	15RAR3005XXX	15	2	2.0	20m	100m#	200m§		655n	3.5m†	20m			XX	Right Angle Bar	None	PA135a
77	15RAR3010XXX	15	2	2.8	20m	105m#	300m§		635n	7.0m†	10m			XX	Right Angle Bar	None	PA135a
78	15RAR3009XXX	15	2	2.8	20m	105m#	300m§		635n	25m†	10m			XX	Right Angle Bar	None	PA135a
79	15RAY3013XXX	15	4	2.8	20m	105m#	300m§		585n	7.0m†	10m			XX	Right Angle Bar	None	PA135a
80	15RAY3014XXX	15	4	2.8	20m	105m#	300m§		585n	25m†	10m			XX	Right Angle Bar	None	PA135a
81	15RAG3011XXX	15	5	2.8	20m	105m#	300m§		565n	7.0m†	10m			XX	Right Angle Bar	None	PA135a
82	15RAG3012XXX	15	5	2.8	20m	105m#	300m§		565n	25m†	10m			XX	Right Angle Bar	None	PA135a
83	16RAR3005XXX	16	2	2.0	20m	100m#	200m§		655n	3.5m†	20m			XX	Right Angle Bar	None	PA135a
84	16RAR3010XXX	16	2	2.8	20m	105m#	300m§		635n	7.0m†	10m			XX	Right Angle Bar	None	PA135a
85	16RAR3009XXX	16	2	2.8	20m	105m#	300m§		635n	25m†	10m			XX	Right Angle Bar	None	PA135a
86	16RAY3013XXX	16	4	2.8	20m	105m#	300m§		585n	7.0m†	10m			XX	Right Angle Bar	None	PA135a
87	16RAY3014XXX	16	4	2.8	20m	105m#	300m§		585n	25m†	10m			XX	Right Angle Bar	None	PA135a
88	16RAG3011XXX	16	5	2.8	20m	105m#	300m§		565n	7.0m†	10m			XX	Right Angle Bar	None	PA135a
89	16RAG3012XXX	16	5	2.8	20m	105m#	300m§		565n	25m†	10m			XX	Right Angle Bar	None	PA135a
90	17RAR3005XXX	17	2	2.0	20m	100m#	200m§		655n	3.5m†	20m			XX	Right Angle Bar	None	PA135a
91	17RAR3010XXX	17	2	2.8	20m	105m#	300m§		635n	7.0m†	10m			XX	Right Angle Bar	None	PA135a
92	17RAR3009XXX	17	2	2.8	20m	105m#	300m§		635n	25m†	10m			XX	Right Angle Bar	None	PA135a
93	17RAY3013XXX	17	4	2.8	20m	105m#	300m§		585n	7.0m†	10m			XX	Right Angle Bar	None	PA135a
94	17RAY3014XXX	17	4	2.8	20m	105m#	300m§		585n	25m†	10m			XX	Right Angle Bar	None	PA135a
95	17RAG3011XXX	17	5	2.8	20m	105m#	300m§		565n	7.0m†	10m			XX	Right Angle Bar	None	PA135a
96	17RAG3012XXX	17	5	2.8	20m	105m#	300m§		565n	25m†	10m			XX	Right Angle Bar	None	PA135a
97	18RAR3005XXX	18	2	2.0	20m	100m#	200m§		655n	3.5m†	20m			XX	Right Angle Bar	None	PA135a
98	18RAR3010XXX	18	2	2.8	20m	105m#	300m§		635n	7.0m†	10m			XX	Right Angle Bar	None	PA135a
99	18RAR3009XXX	18	2	2.8	20m	105m#	300m§		635n	25m†	10m			XX	Right Angle Bar	None	PA135a
100	SLA1572	18	2	1.9 †	5.0m	1.0	25m		700n	200 †	5.0m			BD	Com Ka	None	PA139
101	SLA1592	18	2	1.9 †	5.0m	1.0	25m		700n	200 †	5.0m			BD	Com Ka	None	PA138
102	18RAY3013XXX	18	4	2.8	20m	105m#	300m§		585n	7.0m†	10m			XX	Right Angle Bar	None	PA135a
103	18RAY3014XXX	18	4	2.8	20m	105m#	300m§		585n	25m†	10m			XX	Right Angle Bar	None	PA135a
104	18RAG3011XXX	18	5	2.8	20m	105m#	300m§		565n	7.0m†	10m			XX	Right Angle Bar	None	PA135a
105	18RAG3012XXX	18	5	2.8	20m	105m#	300m§		565n	25m†	10m			XX	Right Angle Bar	None	PA135a
106	19RAR3005XXX	19	2	2.0	20m	100m#	200m§		655n	3.5m†	20m			XX	Right Angle Bar	None	PA135a
107	19RAR3010XXX	19	2	2.8	20m	105m#	300m§		635n	7.0m†	10m			XX	Right Angle Bar	None	PA135a
108	19RAR3009XXX	19	2	2.8	20m	105m#	300m§		635n	25m†	10m			XX	Right Angle Bar	None	PA135a
109	19RAG3011XXX	19	5	2.8	20m	105m#	300m§		565n	7.0m†	10m			XX	Right Angle Bar	None	PA135a
110	19RAG3012XXX	19	5	2.8	20m	105m#	300m§		565n	25m†	10m			XX	Right Angle Bar	None	PA135a

SYMBOLS AND CODES EXPLAINED IN INTERPRETER

4. LED & IRED ARRAYS - Bar Graph Display (Cont'd)

IN ORDER OF TYPE AND: (1) NO OF ELEMENTS (2) COLOR & (3) TYPE NUMBER

LINE No.	3 TYPE NUMBER	1 NO. OF ELEM	2 COLOR	MAX FWD VOLTAGE VF (V)	IF TEST (A)	PD RATED MAX (W)	IF RATED MAX (A)	TEMP RNG. CODE - +	PEAK WAVE LGTH λp (m)	LUMINOUS INTENSITY (MIN) Iv (cd)	IF TEST (A)	MIN RADIAT PWR Po (W)	BEAM ANGLE θHI (°)	MAT	FEATURES	SCHE-MATIC	DRAWING
1	DBM20	20		5.0 †	250m									XX	Includes Driver	None	PS299 △
2	TLM8202	20		2.1		60m	20m			150u				XX	Dual ch;gr/yl/red	None	None
3	21RAR3005XXX	21	2	2.0	20m	100m#	200m§		655n	3.5m†	20m			XX	Right Angle Bar	None	PA135a
4	21RAR3010XXX	21	2	2.8	20m	105m#	300m§		635n	7.0m†	10m			XX	Right Angle Bar	None	PA135a
5	21RAR3009XXX	21	2	2.8	20m	105m#	300m§		635n	25m†	10m			XX	Right Angle Bar	None	PA135a
6	21RAY3013XXX	21	4	2.8	20m	105m#	300m§		585n	7.0m†	10m			XX	Right Angle Bar	None	PA135a
7	21RAY3014XXX	21	4	2.8	20m	105m#	300m§		585n	25m†	10m			XX	Right Angle Bar	None	PA135a
8	21RAG3011XXX	21	5	2.8	20m	105m#	300m§		565n	7.0m†	10m			XX	Right Angle Bar	None	PA135a
9	21RAG3012XXX	21	5	2.8	20m	105m#	300m§		565n	25m†	10m			XX	Right Angle Bar	None	PA135a
10	22RAR3005XXX	22	2	2.0	2.0m	100m#	200m§		655n	3.5m†	20m			XX	Right Angle Bar	None	PA135a
11	22RAR3010XXX	22	2	2.8	2.0m	105m#	300m§		635n	7.0m†	10m			XX	Right Angle Bar	None	PA135a
12	22RAR3009XXX	22	2	2.8	20m	105m#	300m§		635n	25m†	10m			XX	Right Angle Bar	None	PA135a
13	22RAY3013XXX	22	4	2.8	2.0m	105m#	300m§		585n	7.0m†	10m			XX	Right Angle Bar	None	PA135a
14	22RAY3014XXX	22	4	2.8	2.0m	105m#	300m§		585n	25m†	10m			XX	Right Angle Bar	None	PA135a
15	22RAG3011XXX	22	5	2.8	20m	105m#	300m§		565n	7.0m†	10m			XX	Right Angle Bar	None	PA135a
16	22RAG3012XXX	22	5	2.8	2.0m	105m#	300m§		565n	25m†	10m			XX	Right Angle Bar	None	PA135a
17	SLA1621	28	2	1.9 †	5.0m	1.5	25m		700n	150 †	5.0m			BD	Com An	None	PA140
18	IBR3(A)	32	2	5.0			150m		660n	100u				XX	Integrated Driver	None	PA84 ⊠
19	IBR3-032	32	2			2.25	150m	27%	660n	100u†				XX	with Driver; Vcc 5V	None	PY1550 ⊠
20	TPAC6050	64	2	2.0	3.0m	800m	5.0m	5C%	665n						64 Dot LED Array	None	PA155
21	TPAC6080	64	2	2.0	3.0m	800m	5.0m	5C%	665n						64 Dot LED Array	None	PA156
22	HDSP8820	101	2	2.1	100m	15m	7.0m		655n	8.0u	100m			XX	Bar Graph	None	PS289
23	RBG8820	101	2	2.1	20m	1.5	200m§	48%	665n	20u	20m			CA	Multiplex Operation	None	PA83 ⊠
24	HDSP8825	101	2	3.1	100m	20m#	5.0m		635n	60u	100m				Bar Graph	None	PS289
25	RBG112(A)	101	2	2.1	20m	1.5	200m§	48%	655n	240u	10m			CA	Bar w/Yellow mkr	None	PA82 ⊠
26	HDSP8835	101	5	3.1	100m	20m#	5.0m		568n	70u	100m				Bar Graph	None	PS289
27	TPAC7050	128	2	2.0	3.0m	1.6	5.0m	5C%	665n						128 Dot LED Array	None	PA157
28	TPAC7080	128	2	2.0	3.0m	1.6	5.0m	5C%	665n						128 Dot LED Array	None	PA158
29	TPMP8160	256	2	2.0	3.0m	15	10m	1A%	660n						256 Dot Print Module	None	PA159

For fiber optic receivers, transmitters, and support modules, turn to page 231.

SYMBOLS AND CODES EXPLAINED IN INTERPRETER

5. LASER DIODES

IN ORDER OF: (1) POWER OUTPUT (2) IF TEST (3) PEAK WAVELENGTH & (4) TYPE NUMBER

LINE No.	4 TYPE NUMBER	1 OUTPUT POWER Po MIN (W)	2 IF TEST (A)	3 PEAK WAVE-LENGTH λP (m)	RESP. TIME TYP (s)	VF MAX (V)	IF TEST	IF RATED MAX (A)	VR RATED MAX (V)	BEAM ANGLE θHI (°)	IF TEST (A)	SPECTRAL BAND-WIDTH Δλ (m)	TEMP RNGE CODE - +	MAT	FEATURES	LEAD CODE	OUTLINE DRAWIMG
LASER DIODE																	
4	ML4101			780n		2.5		10m	3.0	13			45Ø		With monitor diode	Z	PD926
5	ML4401			780n		2.5		10m	3.0	13			45Ø		With monitor diode	Z	PD927
6	C86002E			820n	1.0n	2.0	200m	200m					35Ø	CE	with Fiber Pigtail	♦	PD459
7	ML3001			830n		1.8		10m	3.0	14			45Ø		With monitor diode	Z	PD925
8	ML2205			850n▼		1.8 †			3.0	40			45Ø	EC			PD511
9	ML5308			850n		1.8			3.0	40			45Ø	EC			PD511
10	DE1000(2)	15u	100m	1270n	5.0n	1.4	100m	100m		23		100n		CE			None
11	NDL4103P	30u	100m	850n				150m	2.0			40n	26Ø	EJ	with Fiber Pigtail		PD1016
12	IRE165	200u	100m	840n	15u	1.8 †		150m	2.0	90	100m	50n	48	CE			TO-46
13	LDT363B	400u	70m	825n	800p#	1.8	70m	100m	1.0			1.0n	06	CE			None Ø
14	LDT363C	400u	70m	850n	800p#	1.8	70m	100m	1.0			1.0n	06	CE			None Ø
15	LDT363D	400u	70m	870n	800p#	1.8	70m	100m	1.0			1.0n	06	CE			None Ø
16	HLP5500	400u	70m	1300n					2.0				45				PD974
17	HLP2500	500u♦	25m	830n					2.0				05				PD974
18	LA5273	0.8m	50m	1270n		1.5 †	50m		2.0				25				PD1369
19	LB5272	0.8m	50m	1270n		1.5 †	50m		2.0				26				PD1370
20	LC5272	0.8m	50m	1270n		1.5 †	50m		2.0				26				PD1371
21	FU05LD-N(A)	0.9m		780n	0.5n	1.8	50m	10m	2.0				25	CE			PD1415
22	FU06LD(A)	0.9m		780n	0.5n	1.8	50m	10m	2.0				25	CE			PD1416
23	LC04-10	1.0m		850n		1.8	140m	110m				2.0n		CE		P	PD1008
24	HLP2400	1.0m♦	25m	830n					2.0				05				PD975
25	HLP2600	1.0m♦	25m	830n					2.0				05				PD979
26	FLD133JD	1.0m†	50m	1300n▼	0.5n			100m				2.0n	44	EF	With monitor diode		PD956
27	LCW10FA	1.0m♦	115m	810n	100p#	2.0 †	115m		2.0			2.5n	06	CE	with Fiber Pigtail		PD912
28	LCW10FB	1.0m♦	115m	840n	100p#	2.0 †	115m		2.0			2.5n	06	CE	with Fiber Pigtail		PD912
29	LCW10FC	1.0m♦	115m	860n	100p#	2.0 †	115m		2.0			2.5n	06	CE	with Fiber Pigtail		PD912
30	LCW10FD	1.0m♦	115m	880n	100p#	2.0 †	115m		2.0			2.5n	06	CE	with Fiber Pigtail		PD912
31	FLD133JA	1.0m	120m	1300n▼	0.5n			200m				1.0n	45	EF	With monitor diode		PD956
32	LC51-18	1.0m	130m	1300n	1.0n#	2.0			1.0			1.0n	47Ø	EF	with Fiber Pigtail	♦	PD1207
33	LC51-19	1.0m	130m	1300n	1.0n#	2.0			1.0			1.0n	47Ø	EF	with Fiber Pigtail	♦	PD1208
34	LC53-17	1.0m	130m	1300n	1.0n#	2.0			1.0			1.0n	17Ø	EF		♦	PD1209
35	LCW10F	1.0m♦	150m	850n	100p#	1.8 †	250m	350m		56		2.5n	06	CE		A	PD358
36	C86006E	1.0m♦	300m	820n	1.0n#	2.0 †	300m	400m	2.0	10		4.0n	35Ø	CE	with Fiber Pigtail	♦	PD371
37	C86010E	1.0m♦	300m	820n	1.0n#	2.0	300m	400m					35Ø	CE	with Fiber Pigtail	♦	PD371
38	C86022E	1.0m♦	300m	1.3u	1.0n	2.0	300m	300m	2.0	30		5.0n	35Ø	CJ	with Fiber Pigtail		PD371
39	HLP3500	1.5m♦	50m	830n					2.0				05				PD974
40	HLP5420	1.5m♦	50m	1300n					2.0				05				PD278c
41	HLP5400	1.5m	70m	1300n					2.0				05				PD922
42	HLP5600	1.5m	70m	1300n					2.0				45				PD996
43	HLP5700	1.5m	70m	1300n					2.0				45				PD998
44	NDL4103A	1.5m	100m	850n				150m	2.0			40n	38Ø	EJ		B Ø	PD42r
45	LC50-17	1.5m	140m	1300n	1.0n#	2.0			1.0			3.0n	17Ø	EF		♦	PD1209
46	LC52-18	1.5m	140m	1300n	1.0n#	2.0			1.0			3.0n	47Ø	EF	with Fiber Pigtail	♦	PD1207
47	LC52-19	1.5m	140m	1300n	1.0n#	2.0			1.0			3.0n	47Ø	EF	with Fiber Pigtail	♦	PD1208
48	LC03-10	2.0m		860n		1.8		185m				1.0n		CE		FO	PD1008
49	503CQF(A)	2.0m		1.3u	500p	1.5			5.0			1.0n	06	EF	With monitor diode	♦	PD1170
50	SCW21F	2.0m♦	50m	830n	100p	1.8	50m			23	50m	20u		CE			None
51	SCW20F	2.0m♦	70m	830n	100p	1.8	70m			350	70m	1.0n		CE			None
52	SCW20F-D	2.0m♦	70m	830n	100p	1.8	70m			23	70m	1.0n		CE			None
53	HL7801E	2.0m♦	75m	780n					2.0				05				PD7r
54	HL7801G	2.0m♦	75m	780n					2.0				05				PD8s
55	HLP1500	2.0m♦	95m	830n					2.0				05				PD974
56	LC07-10	2.0m	110m	850n		1.8 †	80m					1.0n				♦	PD1008
57	FLD083JA	2.0m	130m	850n▼	1.0n			200m				1.0n	45	CE	With monitor diode		PD956
58	CQL13	2.0m♦	175m	790n								4n	56$				PD1025
59	C86007E	2.0m	300m	820n	1.0n#	2.0 †	300m	400m	2.0	36		4.0n	35Ø	CE	with Fiber Pigtail	♦	PD372
60	375CQY	3.0m♦		850n	0.5n	2.5 †			30			3.0n	06	CE	with Fiber Pigtail		PD969
61	502CQF(A)	3.0m		1.3u	500p	1.5			5.0			1.0n	06	EF	With monitor diode	♦	PD1292
62	ML4402A	3.0m†	67m	780n		2.5		10m	2.0	33			45Ø	EJ	With monitor diode		PD927
63	ML4412A	3.0m†	67m	780n		2.5		10m	2.0	33			45Ø	EC			PD1117
64	FLD078B1WM	3.0m†	75m	780n				100m	2.0	36		2.0n	46Ø	EJ	With monitor diode		PD1117
65	LC06-03	3.0m	185m	850n		1.8 †	150m					1.0n	27			A	PD447 Ø
66	FLD130WD(A)	3.5m♦	50m	1.3u	500p#			100m		30		2.0n	45Ø	EF			None
67	FLD133WD(A)	3.5m♦	50m	1.3u	500p#			100m		30		2.0n	45Ø	EF			None
68	FLD130D1WH	3.5m	65m	1.3u				100m	2.0	40		4.0n	45Ø	EF			PD1118
69	FLD130D1WK	3.5m	65m	1.3u				100m	2.0	40		4.0n	45Ø	EF	With monitor diode		PD1120
70	FLD130WA	3.5m♦	120m	1300n▼	0.5n			200m		40		1.0n	45	EF		B	PD955
71	FLD131WA	3.5m♦	120m	1300n▼	0.5n			200m		40		1.0n	45	EF		B	PD957
72	FLD133WA	3.5m♦	120m	1300n▼	0.5n			200m		40		1.0n	45	EF	With monitor diode		PD958
73	SCW20	4.0m♦		830n	800p#	2.0 †	85m	200m	1.0			1.0n	06	CE			PD360
74	HLP3400	4.0m	50m	830n					2.0				05				PD975
75	HLP3600	4.0m	50m	830n					2.0				05				PD979
76	ML4102A	4.0m†	67m	780n		2.5		10m	2.0	33			45Ø	EC	With monitor diode		PD926
77	SCW20A	4.0m	70m	810n	100p#	1.8 †	70m		1.0			1.0n	06	CE			PD362
78	SCW20B	4.0m	70m	840n	100p#	1.8 †	70m		1.0			1.0n	06	CE			PD362
79	SCW20C	4.0m	70m	860n	100p#	1.8 †	70m		1.0			1.0n	06	CE			PD362
80	SCW20D	4.0m	70m	880n	100p#	1.8 †	70m		1.0			1.0n	06	CE			PD362
81	HLP1400	4.0m♦	95m	830n					2.0				05				PD975
82	HLP1600	4.0m♦	95m	830n					2.0				05				PD979
83	LCW10A	4.0m♦	115m	810n	100p#	2.0 †	115m		2.0			2.5n	06	CE			PD362
84	LCW10B	4.0m♦	115m	840n	100p#	2.0 †	115m		2.0			2.5n	06	CE			PD362
85	LCW10C	4.0m♦	115m	860n	100p#	2.0 †	115m		2.0			2.5n	06	CE			PD362
86	LCW10D	4.0m♦	115m	880n	100p#	2.0 †	115m		2.0			2.5n	06	CE			PD362
87	TXSK1700	5.0m		790n	3.5n	3.6		180m	2.0	45		10n	06				PD1390
88	TXSK0100	5.0m		810n	3.5n	3.6		180m	2.0	45		10n	06				PD1393
89	TXSK1100	5.0m		810n	3.5n	3.6		180m	2.0	45		10n	06				PD1390
90	TXSK0300	5.0m		830n	3.5n	3.6		180m	2.0	45		10n	06				PD1393
91	TXSK1300	5.0m		830n	3.5n	3.6		180m	2.0	45		10n	06				PD1390
92	516CQF-B(A)	5.0m†		850n		2.5			1.0			3n	06	CE	High speed applic.	♦	None
93	TXSK0500	5.0m		850n	3.5n	3.6		180m	2.0	45		10n	06				PD1393
94	TXSK1500	5.0m		850n	3.5n	3.6		180m	2.0	45		10n	06				PD1390
95	FLD131WD	5.0m†	50m	1300n▼	0.5n			100m				2.0n	45	EF		B	PD957
96	504CQL	5.0m†	65m	780n		2.2		90m	2.0	30		2.0n	16	CE	Double,Visible	♦	PD1295
97	ML7601	5.0m†	65m	1.3u						35			25Ø	EF			PD1046
98	ML7611	5.0m	65m	1.3u		1.6		2.0m	2.0	30			26Ø	EF			PD1404
99	ML7701	5.0m	65m	1.3u		1.6		2.0m	2.0	30			26Ø	EF	With monitor diode		PD1045
100	ML7901	5.0m	65m	1.3u		1.6		2.0m	2.0	30			26Ø	EF			PD1400
101	SCW30	5.0m	70m	830n	100p	1.8	70m			350	70m	1.0n		CE			None
102	C86000E	5.0m	100m	820n	1.0n	2.0 †	100m	200m	2.0	40	100m	2.0n	35Ø	CE		♦	PD100a
103	FLD083WB	5.0m	100m	850n▼	1.0n			150m		40		1.0n	45	CE	With monitor diode		PD958
104	FLD073WB	5.0m†	100m	770m▼	1.0n#			200m		35		1.0n	45	CE	With monitor diode		PD958
105	CQL10A	5.0m†	115m	820n	20n	2.5 †	5m		30	50		4.0n	26	CE			PD945 Ø
106	FLD077B1WM	5.0m†	130m	770n				150m	2.0	35		2.0n	45Ø	EJ	With monitor diode		PD1117
107	FLD085A1WH	5.0m	150m	850n				200m	2.0	50		2.0n	47Ø	EJ			PD1119
108	FLD085A1WJ	5.0m	150m	850n				200m	2.0	50		2.0n	47Ø	EJ			PD1118
109	FLD085B1WK	5.0m	150m	850n				150m	2.0	40		2.0n	45Ø	EJ	With monitor diode		PD1120
110	E2000	5.0m♦	300m	820n	500p	2.0 †						2.5n				A	PD115 Ø

SYMBOLS AND CODES EXPLAINED IN INTERPRETER

5. LASER DIODES - (Cont'd)

IN ORDER OF: (1) POWER OUTPUT (2) IF TEST (3) PEAK WAVELENGTH & (4) TYPE NUMBER

LINE No.	4 TYPE NUMBER	1 OUTPUT POWER Po MIN (W)	2 IF TEST (A)	3 PEAK WAVE-LENGTH λP (m)	RESP. TIME TYP (s)	VF MAX (V)	IF TEST	IF RATED MAX (A)	VR RATED MAX (V)	BEAM ANGLE θHI (°)	IF TEST (A)	SPECTRAL BAND-WIDTH Δλ (m)	TEMP RNGE CODE - +	MAT	FEATURES	LEAD CODE	OUTLINE DRAWIMG
1	ML4405(2)	6.0m♦		750n		3.0			2.0	33			45Ø	EC			PD927
2	ML4014	6.0m♦		780n		2.5			2.0	33			45Ø	EC			PD1402
3	ML4102	6.0m♦		780n	7.0p	2.5			2.0	33			45Ø	EC	With monitor diode		PD926
4	ML4107	6.0m♦		780n		2.5			2.0	30			46Ø	EC			PD926
5	ML4402(3)	6.0m♦		780n	7.0p	2.5			2.0	33			45Ø	EC	With monitor diode		PD927
6	ML4403	6.0m♦		780n		2.5			2.0	33			45Ø	EC			PD927
7	ML4404	6.0m♦		780n		2.5			2.0	33			45Ø	EC			PD927
8	ML4406(2)	6.0m♦		780n		2.5			2.0	38			45Ø	EC			PD927
9	ML4407(2)	6.0m♦		780n		2.5			2.0	33			46Ø	EC			PD927
10	ML4412	6.0m♦		780n	7.0p	2.5			2.0	33			45Ø	EC			PD1117
11	ML4422	6.0m♦		780n	7.0p	2.5			2.0	33			45Ø	EC			PD1401
12	ML4432	6.0m♦		780n	7.0p	2.5			2.0	33			45Ø	EC			PD1117
13	ML4718	6.0m♦		780n		70			2.0	33			45Ø	EC			PD1403
14	ML3101	6.0m♦		815n		2.5		10m	3.0	30			45Ø	EC		Z	PD926
15	ML3401	6.0m♦		815n		2.5		10m	3.0	30			45Ø	EC	With monitor diode		PD927
16	C30130	6.0m♦	400m	820n	1.0n#	2.0	400m	400m	2.0	20	300m	4.0n	35Ø	CE		A	PD100a Ø
17	SCW21	7.0m♦	50m	830n	100p	1.8	50m			350	50m	20u		CE			None
18	C86023E	7.0m	300m	1.3u	1.0n	2.0	300m	300m	2.0	30		5.0n	35Ø	CJ			PD551
19	TXSK1701	10m		790n	3.5n	3.7		180m	2.0	45		8.0n	06				PD1390
20	TXSK0101	10m		810n	3.5n	3.7		180m	2.0	45		8.0n	06				PD1393
21	TXSK1101	10m		810n	3.5n	3.7		180m	2.0	45		8.0n	06				PD1390
22	TXSK2101	10m		810n	3.5n	3.7		180m	2.0	45		8.0n	06		With monitor diode		PD1186
23	TXSK0301	10m		830n	3.5n	3.7		180m	2.0	45		8.0n	06				PD1393
24	TXSK1301	10m		830n	3.5n	3.7		180m	2.0	45		8.0n	06				PD1390
25	TXSK2301	10m		830n	3.5n	3.7		180m	2.0	45		8.0n	06		With monitor diode		PD1186
26	TXSK0501	10m		850n	3.5n	3.7		180m	2.0	45		8.0n	06				PD1393
27	TXSK1501	10m		850n	3.5n	3.7		180m	2.0	45		8.0n	06				PD1390
28	TXSK2501	10m		850n	3.5n	3.7		180m	2.0	45		8.0n	06		With monitor diode		PD1186
29	TXSK3501	10m		862n	3.5n	3.7		180m	2.0	40		8.0n	06				PD1389
30	ML8611	10m♦		1.2u		1.6			2.0	30			26Ø	EF			PD1404
31	ML8701	10m♦		1.2u		1.6			2.0	30			26Ø	EF			PD1045
32	ML9611	10m♦		1.55u		1.7			2.0	40			25Ø	EF			PD1404
33	ML9701	10m♦		1.55u		1.7			2.0	40			25Ø	EF			PD1045
34	CQL10	10m	125m	780n	1.0u#							4.0n	36Ø	CE			None
35	LCW10	10m♦	150m	850n	100p#	1.8 †	250m	350m		56		2.5n	06	CE		T	PD115 Ø
36	E2004	10m♦	300m	845n	500p	1.8 †						2.5n				A	PD115 Ø
37	ML2701	15m♦		850n	4.0p	2.5			3.0	35			46Ø	EC	With monitor diode		PD1045
38	ML2901	15m♦		850n	4.0p	2.5			3.0	35			46Ø	EC			PD1400
39	ML5101	15m	90m	830n	1.0n	2.5	90m	3		13	65m	0.2n			With monitor diode		PD926
40	ML5401	15m	90m	830n	1.0n	2.5	90m	3		13	65m	0.2n			With monitor diode		PD927
41	CQL10B	15m†	165m	820n	20n	3.0			30			5.0n	06	CE			PD945
42	TXSK1703	20m		790n	3.5n	3.8		220m	2.0	45		6.0n	06				PD1390
43	TXSK0103	20m		810n	3.5n	3.8		220m	2.0	45		6.0n	06				PD1393
44	TXSK1103	20m		810n	3.5n	3.8		220m	2.0	45		6.0n	06				PD1390
45	TXSK2103	20m		810n	3.5n	3.8		220m	2.0	45		6.0n	06		With monitor diode		PD1186
46	C86030E	20m♦		820n		3.0	100m	250m	2			.02n	33	CE			PD1037
47	TXSK0303	20m		830n	3.5n	3.8		220m	2.0	45		6.0n	06				PD1393
48	TXSK1303	20m		830n	3.5n	3.8		220m	2.0	45		6.0n	06				PD1390
49	TXSK2303	20m		830n	3.5n	3.8		220m	2.0	45		6.0n	06		With monitor diode		PD1186
50	TXSK0503	20m		850n	3.5n	3.8		220m	2.0	45		6.0n	06				PD1393
51	TXSK1503	20m		850n	3.5n	3.8		220m	2.0	45		6.0n	06				PD1390
52	TXSK2503	20m		850n	3.5n	3.8		220m	2.0	45		6.0n	06		With monitor diode		PD1186
53	TXSK3503	20m		862n	3.5n	3.8		220m	2.0	40		6.0n	06				PD1389
54	LB1-15(A)	50m		850n		3.5 †		1.3				4.5n	25		with Fiber Pigtail		PD1010
55	ML7611A	50m♦		1.31u		2.2			2.0	30			24Ø	EF			PD1404
56	ML7701A	50m♦		1.31u		2.2			2.0	30			24Ø	EF			PD1045
57	ML7901A	50m♦		1.31u		2.2			2.0	30			24Ø	EF			PD1400
58	LB1	100m	1.3	850n	1.0n#	3.5 †	1.3	2	5.0	50	1.3	4.5n	27	CE		B §	None
59	LB1-02	100m	1.3	850n	1n#	3.5 †	1.3	2	1.0	50		4.5n	06	CE			PD451
60	QP123	500m♦	6.0	1.2u	1.0n#	5.0 †	6.0	10				5.0n		CK			None
61	MH60	1.0 ♦	6.0	895n	1.0n	6.0	6.0	6.0		260		4.0n		CE			None
62	LA60(2)	1.0 ♦	8.0	850n	1.0n#	1.4	50m	8.0				3.5n	K7	CE		B	PD114a
63	LD61	1.0 ♦	10	904n	500n#	1.2 †	50m	10	3.0			3.5n	K7	BC			PD114a Ø
64	SG2001(2)	1.0 ♦	10	904n	1.0n#	4.5	10	10	2.0	9.0	10	3.5n	57Ø	BC		A §	PD100 Ø
65	SG2001A	1.0 ♦	10	904n	1.0n#	4.5	10	10					57Ø	BC		A §	PD100c Ø
66	LA12	1.0 ♦	60	905n	10n#	16 †	60	65	1.0	18	60	4.5n	46	BC		A §	None
67	LH65-30	2.0 ♦		904n	20n#	45				40		3.5n	55	BC	Internal driver	♦	PD1288
68	LD60	2.0 ♦	10	904n	500p#	1.2 †	50m	10	3.0			3.5n	K7	BC			PD114a Ø
69	SG2002(2)	2.0 ♦	10	904n	1.0n#	4.5	10	10	2.0	9.0	10	3.5n	57Ø	BC		A §	PD100 Ø
70	SG2002A	2.0 ♦	10	904n	1.0n#	4.5	10	10					57Ø	BC		A §	PD100c Ø
71	C86039EW1	3.0 ♦		810n	1.0n	8.0		8	2	15		5.0n	57	CE			PD100
72	C86039EW2	3.0 ♦		810n	1.0n	8.0		8	2	15		5.0n	57	CE			PD100
73	C86040EW1	3.0 ♦		810n	1.0n	8.0		17	2	15		5.0n	57	CE			PD100
74	C86040EW2	3.0 ♦		830n	1.0n	8.0		17	2	15		5.0n	57	CE			PD100
75	C86039EW3	3.0 ♦		850n	1.0n	8.0		8	2	15		5.0n	57	CE			PD100
76	C86040EW3	3.0 ♦		850n	1.0n	8.0		17	2	15		5.0n	57	CE			PD100
77	C86039EW4	3.0 ♦		895n	1.0n	8.0		8	2	15		5.0n	57	CE			PD100
78	LA3-02	3.0 ♦		905n		11 †		20				4.5n	46Ø				PD451
79	LA3	3 ♦	20	905n	1.0n#	11 †	20	22	1.0	18	20	4.5n	46	BC		A §	None
80	SG2003(2)	3.0 ♦	25	904n	1.0n#	6.5	25	25	2.0	9.0	25	3.5n	57Ø	BC		A §	PD100 Ø
81	SG2003A	3.0 ♦	25	904n	1.0n#	6.5	25	25					57Ø	BC		A §	PD100c Ø
82	MH63	3.5	20	895n	1.0n	6.5	20	20		260		4.0n		CE			None
83	LA63	4.0 ♦	20	850n	1.0n#	1.4	50m	20				3.5n	K7	CE		B	PD114a Ø
84	MH65	4.0	30	895n	1.0n	8.0	30	30		260		4.0n		CE			None
85	LA5-02	5.0		905n		11 †		25				4.5n	46Ø				PD451
86	LD160	5.0 ♦	15	904n	500p#	2.4 †	50m	15				3.5n	K7	BC		B	PD114 Ø
87	LD62	5.0 ♦	20	904n	500p#	1.2 †	50m	20	3.0			3.5n	K7	BC			PD114a Ø
88	SG2005(2)	5.0 ♦	20	904n	1.0n#	6.0	20	20	2.0	9.0	20	3.5n	57Ø	BC		A §	PD100 Ø
89	SG2005A	5.0 ♦	20	904n	1.0n#	6.0	20	20					57Ø	BC		A §	PD100c Ø
90	LA5	5 ♦	20	905n	1.0n#	11 †	20	22	1.0	18	20	4.5n	46	BC		A §	None
91	LD63	5.0 ♦	25	904n	500p#	1.2 †	50m	25	3.0			3.5n	K7	BC			PD114a Ø
92	SG2004(2)	5.0 ♦	25	904n	1.0n#	6.5	25	25	2.0	9.0	25	3.5n	57Ø	BC		A §	PD100 Ø
93	SG2004A	5.0 ♦	25	904n	1.0n#	6.5	25	25					57Ø	BC		A §	PD100c Ø
94	LA6-14(A)	6.0 ♦		905n		12 †		40				4.5n	46Ø	BC		FO	PD1007
95	LA65	6.0 ♦	30	850n	1.0n#	1.4	50m	30				3.5n	K7	CE		B	PD114a Ø
96	E2500	6.0 ♦	40	850n	500p	8.0	40					3.5n					PD114a
97	LA7-01	7.0 ♦		905n		12 †		40				4.5n	46Ø				PD114b
98	SG2006	7.0 ♦	40	904n	1.0n#	8.0	40	40	2.0	9.0	40	3.5n	57Ø	BC		A §	PD100 Ø
99	SG2006A	7.0 ♦	40	904n	1.0n#	8.0	40	40					57Ø	BC		A §	PD100c Ø
100	LA7	7 ♦	40	905n	1.0n#	12 †	40	45	1.0	18	40	4.5n	46	BC		A §	PD100c Ø
101	LA8-02	8.0 ♦		905n		12 †		40				4.5n	46Ø				PD451
102	LD66	8.0 ♦	40	904n	500p#	1.2 †	50m	40	3.0			3.5n	K7	BC			PD114a Ø
103	LA8	8 ♦	40	905n	1.0n#	12 †	40	45	1.0	18	40	4.5n	46	BC		A §	None
104	LH65-20	10 ♦		904n	20n#	90				40		3.5n	55	BC	Internal driver	♦	PD1288
105	LH65-40	10 ♦		904n	20n#	40				40		3.5n	55	BC	Internal driver	♦	PD1288
106	LH65-50	10 ♦		904n	20n#	35				40		3.5n	55	BC	Internal driver	♦	PD1288
107	LA10-02	10 ♦		905n		12 †		40				4.5n	46Ø				PD451
108	E2502	10 ♦	40	904n	500p	6.7	40					3.5n					PD114a
109	LD65	10 ♦	40	904n	500p#	1.2 †	50m	40	3.0			3.5n	K7	BC			PD114a Ø
110	SG2007	10 ♦	40	904n	1.0n#	8.0	40	40	2.0	9.0	40	3.5n	57Ø	BC		A §	PD100 Ø

SYMBOLS AND CODES EXPLAINED IN INTERPRETER

5. LASER DIODES - (Cont'd)

IN ORDER OF: (1) POWER OUTPUT (2) IF TEST (3) PEAK WAVELENGTH & (4) TYPE NUMBER

LINE No.	4 TYPE NUMBER	1 OUTPUT POWER Po MIN (W)	2 IF TEST (A)	3 PEAK WAVE-LENGTH λP (m)	RESP. TIME TYP (s)	VF MAX (V)	IF TEST	IF RATED MAX (A)	VR RATED MAX (V)	BEAM ANGLE θHI (°)	IF TEST (A)	SPECTRAL BAND-WIDTH Δλ (m)	TEMP RNGE CODE - +	MAT	FEATURES	LEAD CODE	OUTLINE DRAWIMG
1	SG2007A	10 ♦	40	904n	1.0n#	8.0	40	40					57Ø	BC		A §	PD100c Ø
2	LA10	10 ♦	40	905n	1.0n#	12 †	40	45	1.0	18	40	4.5n	46	BC		A §	None
3	LA162	12 ♦	20	850n	1.0n#	4.2	50m	20				3.5n	K7	CE		B	PD114 Ø
4	LA68	12 ♦	60	850n	1.0n#	1.4	50m	60				3.5n	K7	CE		B	PD114a Ø
5	MH67(2)	12 ♦	60	895n	1.0n	15	60	60		260		4.0n		CE			None
6	LA12-02	12 ♦	60	905n		16 †	60	60				4.5n	46Ø				PD451
7	SG2009	12 ♦	75	904n	1.0n#	10	75	75	2.0	9.0	75	3.5n	57Ø	BC		A §	PD100 Ø
8	SG2009A	12 ♦	75	904n	1.0n#	10	75	75					57Ø	BC		A §	PD100c Ø
9	LD162(1)	15 ♦	25	904n	500p#	3.6 †	50m	25				3.5n	K7	BC		B	PD114 Ø
10	SG2010	15 ♦	75	904n	1.0n#	10	75	75	2.0	9.0	75	3.5n	57Ø	BC		A §	PD100 Ø
11	SG2010A	15 ♦	75	904n	1.0n#	10	75	75					57Ø	BC		A §	PD100c Ø
12	LH67-30	16 ♦		904n	20n#	65				40		3.5n	55	BC	Internal driver	♦	PD1288
13	LH67-40	16 ♦		904n	20n#	60				40		3.5n	55	BC	Internal driver	♦	PD1288
14	LH67-50	16 ♦		904n	20n#	50				40		3.5n	55	BC	Internal driver	♦	PD1288
15	LD67	16 ♦	60	904n	500p#	1.2 †	50m	60	3.0			3.5n	K7	BC			PD114a Ø
16	LD68	16 ♦	75	904n	500n#	1.2 †	50m	75	3.0			3.5n	K7	BC			PD114a Ø
17	LE17	17 ♦		905n	1.0n#	16	40	45	2.0	18			46Ø	BC			None
18	LA163	20 ♦	30	850n	1.0n#	4.2	50m	30				3.5n	K7	CE		B	PD114 Ø
19	LDF163	20 ♦	40	904n	1.0n	15	40	40		33		3.5n		CE			None
20	SG2012(2)	20 ♦	100	904n	1.0n#	12	100	100	2.0	9.0	100	3.5n	57Ø	BC		A §	PD100a Ø
21	SG2012A	20 ♦	100	904n	1.0n#	12	100	100					57Ø	BC		A §	PD100d Ø
22	LE25	25 ♦		905n	1.0n#	20	40	45	3.0	18			46	BC			PD451
23	MH163	25	30	900n	1.0n#	17 †	30	30	3.0	24	30	4.5n	K7				None
24	LD163	25 ♦	40	904n	500p#	3.6 †	50m	40				3.5n	K7	BC		B	PD114 Ø
25	SG3001	25 ♦	40	904n		16 †	40	40		20		3.5n	K6Ø	BC		A §	PD100a Ø
26	LD164	30 ♦	75	904n	500p#	2.4 †	50m	75				3.5n	K7	BC		B	PD114 Ø
27	LD210	50 ♦	25	904n	500p#	12 †	50m	25				3.5n	K7	BC		A	PD115 Ø
28	MH166	50 ♦	40	900n	1.0n#	25 †	40	40	3.0	24	40	4.5n	K7				None
29	LD166	50 ♦	60	904n	500p#	4.8 †	50m	60				3.5n	K7	BC		B	PD114 Ø
30	LDF167	60 ♦		904n	1.0n#	27 †	75	75		18		3.5n	K6				None
31	MH214	60 ♦	30	895n	1.0n	75	30	30		260		4.5n		CE			None
32	LD214	60 ♦	40	904n	500p#	14 †	50m	40				3.5n	K7	BC		A	PD115 Ø
33	LD214S	60 ♦	40	904n	500p#	14 †	50m	40				3.5n	K7	BC		A	PD115 Ø
34	LA167	60 ♦	60	850n	1.0n#	7.0	50m	60				3.5n	K7	CE		B	PD114 Ø
35	LF75	70 ♦		905n	1.0n#	80	40	45	10	27			06	BC			PD451
36	MH167	70 ♦	50	900n	1.0n#	32 †	50	50	4.0	24	50	4.5n	K7				None
37	E2525	75 ♦		905n	500p	27	75										None
38	LD211	75 ♦	25	904n	500p#	18 †	50m	25				3.5n	K7	BC		A	PD115 Ø
39	LA215	75 ♦	40	850n	500n#	16 †	50m	40				3.5n	K7	CE		A	PD115 Ø
40	LD167	75 ♦	75	904n	500n#	6.0 †	50m	75				3.5n	K7	BC		B	PD114 Ø
41	LF100	90 ♦		905n	1.0n#	80	40	45	10	27			06	BC			PD452
42	LD215	100 ♦	40	904n	500p#	14 †	50m	40				3.5n	K7	BC		A	PD115 Ø
43	LD215S	100 ♦	40	904n	500p#	14 †	50m	40				3.5n	K7	BC		A	PD115 Ø
44	LD168	100 ♦	100	904n	500n#	7.2 †	50m	100				3.5n	K7	BC		B	PD114 Ø
45	LD212	150 ♦	25	904n	500p#	36 †	50m	25				3.5n	K7	BC		A	PD115 Ø
46	LA220	150 ♦	40	850n	500n#	31 †	50m	40				3.5n	K7	CE		A	PD115 Ø
47	LD224-8S	150 ♦	40	904n	500p#	9.6 †	50m	40				3.5n	K7	BC		A	PD115 Ø
48	LD220	200 ♦	40	904n	500p#	29 †	50m	40				3.5n	K7	BC		A	PD115 Ø
49	LA430	225 ♦	40	850n	500p#	50 †	50m	40				3.5n	K7	CE		A	PD115 Ø
50	LA235	275 ♦	40	850n	500p#	60 †	50m	40				3.5n	K7	CE		A	PD115 Ø
51	LD213	300 ♦	25	904n	500p#	72 †	50m	25				3.5n	K7	BC		A	PD115 Ø
52	LD330	300 ♦	40	904n	500p#	44 †	50m	40				3.5n	K7	BC		A	PD115 Ø
53	LD430	300 ♦	40	904n	500p#	48 †	50m	40				3.5n	K7	BC		A	PD115 Ø
54	LD235	350 ♦	40	904n	500p#	58 †	50m	40				3.5n	K7	BC		A	PD115 Ø
55	LD360	600 ♦	40	904n	500p#	40	50m	40				3.5n	K7	BC		A	PD115 Ø
56	LA410	800 ♦	40	850n	500p#	31	50m	40				3.5n	K7	CE		A	PD115 Ø
57	LD410	1.0k♦	40	904n	500p#	28	50m	40				3.5n	K7	BC		A	PD115 Ø

For fiber optic receivers, transmitters, and support modules, turn to page 231.

SYMBOLS AND CODES EXPLAINED IN INTERPRETER

10. PHOTODIODES - Avalanche

IN ORDER OF: (1)TYPE (2) RESPONSIVITY (3) MAX DARK CURRENT & (4) TYPE NUMBER

LINE No.	4 TYPE NUMBER	1 TYPE	3 MAX DARK CURR @ 25°C ID (A)	VR TEST (V)	MAX RATINGS @ 25°C PD (W)	VR (V)	IF (A)	TEMP RNG. CODE - +	2 MINIMUM RESPONSIVITY Re (A/W)	SOUR-CE	λ (m)	VR (V)	ACTIVE AREA Sq In	RESP. TIME (s)	CAPAC C (F)	SPECTRAL RANGE LOW λL (m)	HIGH λH (m)	NOISE EQ.PWR Pn Watt/Hz1/2	MTL	LEAD CODE	DRAWING
PHOTODIODE, AVALANCHE																					
4	AD1000(2)	1	1.0n	50		150	10m	48Ø											XX		None
5	FPD08R32WS	1	3.0n	162			100m	48								830n	830n		AD	B	PD960
6	BPW28(A)	1	5.0n		100m	200		6C					47u		1.2p	450n	950n		AD	B	PD14b
7	FPD140M3	1	5.0u	36			100m	47							8.0p	1.3u	1.3u		AB	B	PD960
8	TD24	1	100n						60u		830n		0.5 *	1.0n#				3.0f	XX		TO-18
9	TD25	1	100n						65u		830n		0.2 *	0.5n#				3.0f	XX		TO-5
10	BPW79	1	10n	10	100m	230		6C§	250m†		950n	20	1.1u		2.5p	500n	900n		BC	B	PD14q
11	PD1002(1)	1	1.0n	50		200	10m	4AØ	0.4		800n	50	30m*		1.5p			10f	AD		PD517
12	PD1005	1	1.0n	50		200	10m	48Ø	0.4		800n	50	200m*		5.0p			10f	AD		PD517
13	PD1302	1	1.0n	50		200	10m	4AØ	0.4		800n	50	30m*		1.5p			10f	AD		PD520
14	PD1305	1	1.0n	50		200	10m	48Ø	0.4		800n	50	200m*		5.0p			10f	AD		PD520
15	C30956E	1	200n		100m	425	5m	47	36		900n			2n#	10p	400n	1.1u	1.1p	AD		TO-8
16	C30872	1	300n	335	100m	425	5.0m	47	37 †		900n	335	11m	2.0n#	10p	400n	1.1u	30f	AD	K §	PD108 Ø
17	C30916E	1	200n	350		390 †	5.0m	47	43		900n	350	1.8 *	4.0n	5.0p	400n	1.1u	1.0p*	AD	Z	PD42j
18	C30905E	1	400n	350	100m	390 †	5.0m	47	43		900n		1.8m§	3.0n#	3.5p	400n	1.1u	1.0p*	AD	X	PD286 Ø
19	NDL1102	1	1.0n	139	100m	140	100m	6F%	50 #		630n			1.0n	2.5p	500n	1.0u		AD	B	TO-18
20	C30908E	1	30n	215	100m	225 †	5.0m	47	55		900n		77u§	500p#	1.6p	400n	1.0u	230f*	AD	X	PD286 Ø
21	C30955E	1	200n		100m	425	5m	47	55		900n			2n#	3p	400n	1.1u	1.0p	AD		TO-5
22	C30921E▼	1	100u		100m	225 †	5.0m	47	55		900n		76u	500p#	1.6p	400n	1.1u	230f*	AD	♦	PD458
23	NDL1202	1	1.0n	248	100m	250	100m	6F%	60 #		850n		200u*	1.0n	2.5p	400n	1.0u		AD	B	TO-18
24	368BPY	1	5.0n	.80	100m	200	10m	2C	60 †		800n	140	350u*	.44n	1.3p			7.6f	AD		PD470
25	C30902E	1	30n	180	100m	250	5.0m	47	65 †		900n	180	310u	500p#	1.6p	400n	1.0u	3.0f	AD	A	PD288 Ø
26	C30904E	1	200n	350	100m	375 †	5.0m	47	65		900n		310u§	2.0n#	2.0p	400n	1.1u	1.0p*	AD	X	PD286 Ø
27	C30954E	1	100m		100m	425	5m	47	65		900n			2n#	2p	400n	1.1u	1.0p	AD		TO-5
28	C30817	1	50n†	300	100m	20		47	75 †		900n	300	800u	2.0n#	2.0p	400n	1.1u	15f	AD	C Ø	PD109 Ø
29	C30895	1	100n†	350	100m	425	5.0m	47	75 †		900n	350	774m	2.0n#	2.0p	700n	1.1u	15f	XX	A Ø	PD42j Ø
30	C30950G	1				250		47	41kØ		900			2n#		400n	1.0u	310f	AD		PD1034
31	C30950GL▼	1				250		47	41kØ		900		.60 §	2n#		400n	1.0u	310f	AD		PD1035
32	C30950F	1				250		47	.14MØ		900n			4n#		400n	1.0u	94f	AD		PD1034
33	C30950FL▼	1				250		47	.14MØ		900		.60 §	4n#		400n	1.0u	94f	AD		PD1035
34	C30950E	1				425		47	.49MØ		900n			7n#		400n	1.0u	27f	AD		PD1034
35	C30950EL▼	1				425		47	.49MØ		900		.60 §	7n#		400n	1.0u	27p	AD		PD1035
PHOTODETECTOR, DEWAR-TYPE																					
39	GEAU1-40742HS	2	1.5G*					KX♦					1.2m	2.0n§		1.0u	10u		BJ		PD152 Ø
40	GEAU1-44782HS	2	1.5G*					KX♦					1.2m	2.0n§		1.0u	10u		BJ		PD153 Ø
41	GEAU2-40742HS	2	1.5G*					KX♦					4.8m	2.0n§		1.0u	10u		BJ		PD152 Ø
42	GEAU2-44782HS	2	1.5G*					KX♦					4.8m	2.0n§		1.0u	10u		BJ		PD153 Ø
43	GEAU-.5-40742HS	2	1.5G*					KX♦					304u	2.0n§		1.0u	10u		BJ		PD152 Ø
44	GEAU-.5-44782HS	2	1.5G*					KX♦					304u	2.0n§		1.0u	10u		BJ		PD153 Ø
45	SIAS1-9145-1	2	9.0G*					TX♦					1.2m			1.0u	23u		BQ		PD154 Ø
46	SIAS2-9145-1	2	9.0G*					TX♦					4.8m			1.0u	23u		BQ		PD154 Ø
47	SIAS-.5-9145-1	2	9.0G*					TX♦					304u			1.0u	23u		BQ		PD154 Ø
48	503(2)	2	10G*		Ø			KX					1.2m	250n	12n	6.5u	13u		CH		PD313
49	5800(3)	2	18G*		Δ			X2						50u§		1.0u	5.5u		BS		PD185 Ø
50	5840	2	18G*		Δ			X2						80u		1.0u	5.5u		BS		PD186 Ø
51	502(2)	2	20G*		Ø			KX					1.2m	500n	12n	6.0u	11u		CH		PD313
52	5802	2	20G*		$			x2						50u§		1.0u	5.5u		BS		PD185 Ø
53	5804	2	20G*		Ø			x2						50u§		1.0u	5.5u		BS		PD185 Ø
54	5805(2)	2	20G*		Ø			X2						50u§		1.0u	5.5u		BS		PD152 Ø
55	5842	2	20G*		$			x2						50u§		1.0u	5.5u		BS		PD186 Ø
56	5844	2	20G*		Ø			x2						50u§		1.0u	5.5u		BS		PD186 Ø
57	5845	2	20G*		Ø			X2						50u§		1.0u	5.5u		BS		PD153 Ø
58	501(1)	2	30G*		Ø			KX					1.2m	500n	12n	5.0u	10u		CH		PD313
59	PBSATO-.5-10A	2	80G*					X2♦		K	2.4u		304u	500u§		1.0u	3.5u		BH		PD147 Ø
60	PBSLTO2-40A	2	100G*					KX♦					4.8m	3.0m§		1.0u	4.5u		BH		PD147 Ø
61	PBSLTO2-40AS	2	100G*					KX♦					4.8m	3.0m§		1.0u	4.5u		BH		PD147a Ø
62	PBSLTO2-60A	2	100G*					KX♦					4.8m	3.0m§		1.0u	4.5u		BH		PD148 Ø
63	PBSLTO2-60AS	2	100G*					KX♦					4.8m	3.0m§		1.0u	4.5u		BH		PD148a Ø
64	PBSLTO-.5-40A	2	100G*					KX♦					304u	3.0m§		1.0u	4.5u		BH		PD147 Ø
65	PBSLTO-.5-40AS	2	100G*					KX♦					304u	3.0m§		1.0u	4.5u		BH		PD147a Ø
66	PBSLTO-.5-40742	2	100G*					KX♦					304u	3.0m§		1.0u	4.5u		BH		PD152 Ø
67	PBSLTO-.5-44782	2	100G*					KX♦					304u	3.0m§		1.0u	4.5u		BH		PD153 Ø
68	PBSLTO-.5-520A	2	100G*					KX♦					304u	3.0m§		1.0u	4.5u		BH		PD151 Ø
69	PBSLTO-.5-520AS	2	100G*					KX♦					304u	3.0m§		1.0u	4.5u		BH		PD151a Ø
70	PBSLTO-.5-60A	2	100G*					KX♦					304u	3.0m§		1.0u	4.5u		BH		PD148 Ø
71	PBSLTO-.5-60AS	2	100G*					KX♦					304u	3.0m§		1.0u	4.5u		BH		PD148a Ø
72	2800(2)	2	150G*		Δ			X2					1.5m	3.0m§		1.0u	4.5u		BH		PD185 Ø
73	2840	2	150G*		Δ			X2					1.5m	5.0u§		1.0u	4.5u		BH		PD186 Ø
74	2802(3)	2	300G*		$			x2						3.0m§		1.0u	4.5u		BH		PD185 Ø
75	2804(2)	2	300G*		Ø			x2						3.0m§		1.0u	4.5u		BH		PD185 Ø
76	2805(2)	2	300G*		Ø			X2					3.0m§			1.0u	4.5u		BH		PD152 Ø
77	2842	2	300G*		$			x2						3.0m§		1.0u	4.5u		BH		PD186 Ø
78	2844	2	300G*		Ø			x2						3.0m§		1.0u	4.5u		BH		PD186 Ø
79	2845	2	300G*		Ø			X2					3.0m§			1.0u	4.5u		BH		PD153 Ø
80	PBSITO2-40A	2	400G*					8X♦					4.8m	5.0m§		1.0u	4.0u		BH		PD147 Ø
81	PBSITO2-40AS	2	400G*					8X♦					4.8m	5.0m§		1.0u	4.0u		BH		PD147a Ø
82	PBSITO2-60A	2	400G*					8X♦					4.8m	5.0m§		1.0u	4.0u		BH		PD148 Ø
83	PBSITO2-60AS	2	400G*					8X♦					4.8m	5.0m§		1.0u	4.0u		BH		PD148a Ø
84	PBSITO-.5-40A	2	400G*					8X♦					304u§	5.0m§		1.0u	4.0u		BH		PD147 Ø
85	PBSITO-.5-40AS	2	400G*					8X♦					304u§	5.0m§		1.0u	4.0u		BH		PD147a Ø
86	PBSITO-.5-40742	2	400G*					8X♦					304u§	5.0m§		1.0u	4.0u		BH		PD152 Ø
87	PBSITO-.5-44782	2	400G*					8X♦					304u§	5.0m§		1.0u	4.0u		BH		PD153 Ø
88	PBSITO-.5-520A	2	400G*					8X♦					304u§	5.0m§		1.0u	4.0u		BH		PD151 Ø

SYMBOLS AND CODES EXPLAINED IN INTERPRETER

10. PHOTODIODES - Dewar-Type Detector (Cont'd)

IN ORDER OF: (1)TYPE (2) RESPONSIVITY
(3) MAX DARK CURRENT & (4) TYPE NUMBER

LINE No.	4 TYPE NUMBER	1 TYPE	3 MAX DARK CURR @ 25°C ID (A)	VR TEST (V)	MAX RATINGS @ 25°C PD (W)	VR (V)	IF (A)	TEMP RNG. CODE - +	2 MINIMUM RESPONSIVITY Re (A/W)	SOUR-CE	λ (m)	VR (V)	ACTIVE AREA Sq In	RESP. TIME (s)	CAPAC C (F)	SPECTRAL RANGE LOW λL (m)	HIGH λH (m)	NOISE EQ.PWR Pn Watt/Hz1/2	MTL	LEAD CODE	DRAWING
1	PBSITO-.5-520AS	2	400G*					8X♦					304u§	5.0m§		1.0u	4.0u		BH		PD151a Ø
2	PBSITO-.5-60A	2	400G*					8X♦					304u§	5.0m§		1.0u	4.0u		BH		PD148 Ø
3	PBSITO-.5-60AS	2	400G*					8X♦					304u§	5.0m§		1.0u	4.0u		BH		PD148a Ø
4	PBSEATO10-10A	2	1.0G*					X2♦	400u		3.8u		155m	3.0u§		1.0u	4.5u		BS		PD471 ⊠
5	PBSEATO4-10A	2	1.0G*					X2♦	1.0m		3.8u		25m	3.0u§		1.0u	4.5u		BS		PD471 ⊠
6	PBSEITO10-40742	2	15G*		#			8X♦	1.0m		4.8u		155m	40u§		1.0u	6.0u		BS		PD152 Ø
7	PBSEITO10-44782	2	15G*		#			8X♦	1.0m		4.8u		155m	40u§		1.0u	6.0u		BS		PD153 Ø
8	PBSEITO10-520A	2	15G*					8X♦	1.0m		4.8u		155m	40u§		1.0u	6.0u		BS		PD151 Ø
9	PBSEITO10-520AS	2	15G*					8X♦	1.0m		4.8u		155m	40u§		1.0u	6.0u		BS		PD151a Ø
10	PBSEATO2-10A	2	1.0G*					X2♦	2.0m	K	3.8u		6.2m	3.0u§		1.0u	4.5u		BS		PD471 ⊠
11	PBSEITO4-40742	2	15G*		#			8X♦	2.5m		4.8u		25m	40u§		1.0u	6.0u		BS		PD152 Ø
12	PBSEITO4-44782	2	15G*		#			8X♦	2.5m		4.8u		25m	40u§		1.0u	6.0u		BS		PD153 Ø
13	PBSEITO4-520A	2	15G*					8X♦	2.5m		4.8u		25m	40u§		1.0u	6.0u		BS		PD151 Ø
14	PBSEITO4-520AS	2	15G*					8X♦	2.5m		4.8u		25m	40u§		1.0u	6.0u		BS		PD151a Ø
15	PBSELTO10-40742	2			#			KX♦	4.0m		5.0u		155m	50u§		1.0u	7.0u		BS		PD152 Ø
16	PBSELTO10-44782	2			#			KX♦	4.0m		5.0u		155m	50u§		1.0u	7.0u		BS		PD153 Ø
17	PBSELTO10-520A	2						KX♦	4.0m		5.0u		155m	50u§		1.0u	7.0u		BS		PD151 Ø
18	PBSELTO10-520AS	2						KX♦	4.0m		5.0u		155m	50u§		1.0u	7.0u		BS		PD151a Ø
19	PBSEATO1-10A	2	1.0G*					X2♦	4.0m	K	3.8u		1.6m	3.0u§		1.0u	4.5u		BS		PD471 ⊠
20	GEAU2-520A	2	1.5G*					KX♦	5.0m		5.0u		4.9m	100n§		1.0u	10u		BJ		PD151 Ø
21	GEAU2-520AS	2	1.5G*					KX♦	5.0m		5.0u		4.9m	100n§		1.0u	10u		BJ		PD151a Ø
22	GEAU2-40742	2	1.5G*		#			KX♦	5.0m		5.0u		4.9m	100n§		1.0u	10u		BJ		PD152 Ø
23	GEAU2-44782	2	1.5G*		#			KX♦	5.0m		5.0u		4.9m	100n§		1.0u	10u		BJ		PD153 Ø
24	PBSEITO2-40742	2	15G*		#			8X♦	5.0m		4.8u		6.2m	40u§		1.0u	6.0u		BS		PD152 Ø
25	PBSEITO2-44782	2	15G*		#			8X♦	5.0m		4.8u		6.2m	40u§		1.0u	6.0u		BS		PD153 Ø
26	PBSEITO2-520A	2	15G*					8X♦	5.0m		4.8u		6.2m	40u§		1.0u	7.0u		BS		PD151 Ø
27	PBSEITO2-520AS	2	15G*					8X♦	5.0m		4.8u		6.2m	40u§		1.0u	6.0u		BS		PD151a Ø
28	PBSELTO4-40742	2			#			KX♦	10m		5.0u		25m	50u§		1.0u	7.0u		BS		PD152 Ø
29	PBSELTO4-44782	2			#			KX♦	10m		5.0u		25m	50u§		1.0u	7.0u		BS		PD153 Ø
30	PBSELTO4-520AS	2						KX♦	10m		5.0u		25m	50u§		1.0u	7.0u		BS		PD151a Ø
31	GEAU1-520A	2	1.5G*					KX♦	10m		5.0u		1.2m	100n§		1.0u	10u		BJ		PD151 Ø
32	GEAU1-520AS	2	1.5G*					KX♦	10m		5.0u		1.2m	100n§		1.0u	10u		BJ		PD151a Ø
33	GEAU1-40742	2	1.5G*		#			KX♦	10m		5.0u		1.2m	100n§		1.0u	10u		BJ		PD152 Ø
34	GEAU1-44782	2	1.5G*		#			KX♦	10m		5.0u		1.2m	100n§		1.0u	10u		BJ		PD153 Ø
35	PBSEITO1-40742	2	15G*		#			8X♦	10m		4.8u		1.6m	40u§		1.0u	6.0u		BS		PD152 Ø
36	PBSEITO1-44782	2	15G*		#			8X♦	10m		4.8u		1.6m	40u§		1.0u	6.0u		BS		PD153 Ø
37	PBSEITO1-520A	2	15G*					8X♦	10m		4.8u		1.6m	40u§		1.0u	6.0u		BS		PD151 Ø
38	PBSEITO1-520AS	2	15G*					8X♦	10m		4.8u		1.6m	40u§		1.0u	6.0u		BS		PD151a Ø
39	PBSELTO4-520A	2	15G*					KX♦	10m		5.0u		25m	50u§		1.0u	7.0u		BS		PD151 Ø
40	PBSLTO10-520A	2	150G*					KX♦	10m		2.8u		155m	5m§		1.0u	4.5u		BH		PD151 Ø
41	PBSLTO10-520AS	2	150G*					KX♦	10m		2.8u		155m	5m§		1.0u	4.5u		BH		PD151a Ø
42	PBSLTO10-40742	2	150G*		#			KX♦	10m		2.8u		155m	5m§		1.0u	4.5u		BH		PD152 Ø
43	PBSLTO10-44782	2	150G*		#			KX♦	10m		2.8u		155m	5m§		1.0u	4.5u		BH		PD153 Ø
44	GEHG2-9145-2HS	2	10G*		§			UX♦	15m		10u		4.9m	1.0n§	800p	2.0u	14u		BK		PD154b Ø
45	GEAU-.5-520A	2	1.5G*					KX♦	20m		5.0u		304u	100n§		1.0u	10u		BJ		PD151 Ø
46	GEAU-.5-520AS	2	1.5G*					KX♦	20m		5.0u		304u	100n§		1.0u	10u		BJ		PD151a Ø
47	GEAU-.5-40742	2	1.5G*		#			KX♦	20m		5.0u		304u	100n§		1.0u	10u		BJ		PD152 Ø
48	GEAU-.5-44782	2	1.5G*		#			KX♦	20m		5.0u		304u	100n§		1.0u	10u		BJ		PD153 Ø
49	PBSELTO2-40742	2	15G*		#			KX♦	20m		5.0u		6.2m	50u§		1.0u	7.0u		BS		PD152 Ø
50	PBSELTO2-44782	2	15G*		#			KX♦	20m		5.0u		6.2m	50u§		1.0u	7.0u		BS		PD153 Ø
51	PBSELTO2-520A	2	15G*					KX♦	20m		5.0u		6.2m	50u§		1.0u	7.0u		BS		PD151 Ø
52	PBSELTO2-520AS	2	15G*					KX♦	20m		5.0u		6.2m	50u§		1.0u	7.0u		BS		PD151a Ø
53	PBSLTO4-520A	2	150G*					KX♦	25m		2.8u		25m	5.0m§		1.0u	4.5u		BH		PD151 Ø
54	PBSLTO4-520AS	2	150G*					KX♦	25m		2.8u		25m	5.0m§		1.0u	4.5u		BH		PD151a Ø
55	PBSLTO4-40742	2	150G*		#			KX♦	25m		2.8u		25m	5.0m§		1.0u	4.5u		BH		PD152 Ø
56	PBSLTO4-44782	2	150G*		#			KX♦	25m		2.8u		25m	5.0m§		1.0u	4.5u		BH		PD153 Ø
57	GEHG1-9145-2HS	2	10G*		§			UX♦	30m		10u		1.2m	1.0n§	800p	2.0u	14u		BK		PD154b Ø
58	GEZN3-9145-1	2	10G*		⊠			UX♦	33m		37u		11m	100n§		2.0u	40u		BP		PD154 Ø
59	PBSELTO1-40742	2	15G*		#			KX♦	40m		5.0u		1.6m	50u§		1.0u	7.0u		BS		PD152 Ø
60	PBSELTO1-44782	2	15G*		#			KX♦	40m		5.0u		1.6m	50u§		1.0u	7.0u		BS		PD153 Ø
61	PBSELTO1-520A	2	15G*					KX♦	40m		5.0u		1.6m	50u§		1.0u	7.0u		BS		PD151 Ø
62	PBSELTO1-520AS	2	15G*					KX♦	40m		5.0u		1.6m	50u§		1.0u	7.0u		BS		PD151a Ø

SYMBOLS AND CODES
EXPLAINED IN INTERPRETER

10. PHOTODIODES - Dewar-Type Detector (Cont'd)

IN ORDER OF: (1)TYPE (2) RESPONSIVITY
(3) MAX DARK CURRENT & (4) TYPE NUMBER

LINE No.	4 TYPE NUMBER	1 TYPE	3 MAX DARK CURR @ 25°C ID (A)	VR TEST (V)	MAX RATINGS @ 25°C PD (W)	VR (V)	IF (A)	TEMP RNG. CODE - +	2 MINIMUM RESPONSIVITY Re (A/W)	SOUR-CE	λ (m)	VR (V)	ACTIVE AREA Sq In	RESP. TIME (s)	CAPAC C (F)	SPECTRAL RANGE LOW λL (m)	HIGH λH (m)	NOISE EQ.PWR Pn Watt/Hz1/2	MTL	LEAD CODE	DRAWING
1	GEZN2-9145-1	2	10G*		⊠			UX♦	50m		37u		4.9m	100n§		2.0u	40u		BP		PD154 Ø
2	GECU2-9145-2HS	2	13G*		§			UX♦	50m		21u		4.9m	1.0n§	800p	2.0u	30u		BM		PD154b Ø
3	PBSATO10-10A	2	80G*					X2♦	50m		2.4u		155m	500u§		1.0u	3.5u		BH		PD471 ⊠
4	PBSLTO2-520A	2	150G*					KX♦	50m		2.8u		6.2m	5.0m§		1.0u	4.5u		BH		PD151 Ø
5	PBSLTO2-520AS	2	150G*					KX♦	50m		2.8u		6.2m	5.0m§		1.0u	4.5u		BH		PD151a Ø
6	PBSLTO2-40742	2	150G*		#			KX♦	50m		2.8u		6.2m	5.0m§		1.0u	4.5u		BH		PD152 Ø
7	PBSLTO2-44782	2	150G*		#			KX♦	50m		2.8u		6.2m	5.0m§		1.0u	4.5u		BH		PD153 Ø
8	GEHG-.5-9145-2HS	2	10G*		§			UX♦	60m		10u		304u	1.0n§	800p	2.0u	14u		BK		PD154b Ø
9	GEZN1-9145-1	2	10G*		⊠			UX♦	100m		37u		1.2m	100n§		2.0u	40u		BP		PD154 Ø
10	GECU1-9145-2HS	2	13G*		§			UX♦	100m		21u		1.2m	1.0n§	800p	2.0u	30u		BM		PD154b Ø
11	PBSLTO1-520A	2	150G*					KX♦	100m		2.8u		1.6m	5.0m§		1.0u	4.5u		BH		PD151 Ø
12	PBSLTO1-520AS	2	150G*					KX♦	100m		2.8u		1.6m	5.0m§		1.0u	4.5u		BH		PD151a Ø
13	PBSLTO1-40742	2	150G*		#			KX♦	100m		2.8u		1.6m	5.0m§		1.0u	4.5u		BH		PD152 Ø
14	PBSLTO1-44782	2	150G*		#			KX♦	100m		2.8u		1.6m	5.0m§		1.0u	4.5u		BH		PD153 Ø
15	PBSITO10-520A	2	400G*					8X♦	100m		2.8u		155m	5.0m§		1.0u	4.0u		BH		PD151 Ø
16	PBSITO10-520AS	2	400G*					8X♦	100m		2.8u		155m	5.0m§		1.0u	4.0u		BH		PD151a Ø
17	PBSITO10-40742	2	400G*		#			8X♦	100m		2.8u		155m	5.0m§		1.0u	4.0u		BH		PD152 Ø
18	PBSITO10-44782	2	400G*		#			8X♦	100m		2.8u		155m	5.0m§		1.0u	4.0u		BH		PD153 Ø
19	PBSATO4-10A	2	80G*					X2♦	125m		2.4u		25m	500u§		1.0u	3.5u		BH		PD471 ⊠
20	GEZN-.5-9145-1	2	10G*		⊠			UX♦	200m		37u		304u	100n§		2.0u	40u		BP		PD154 Ø
21	GECU-.5-9145-2HS	2	13G*		§			UX♦	200m		21u		304u	800p§		2.0u	30u		BM		PD154b Ø
22	GECD2-9145-1	2	20G*		⊠			UX♦	250m		19u		4.9m	100n§		2.0u	23u		BN		PD154 Ø
23	GECD2-9145-2HS	2	20G*		§			UX♦	250m		19u		4.9m	100n§		2.0u	23u		BN		PD154b Ø
24	PBSATO2-10A	2	80G*					X2♦	250m	K	2.4u		6.2m	500u§		1.0u	3.5u		BH		PD471 ⊠
25	PBSITO4-520A	2	400G*					8X♦	250m		2.8u		25m	5.0m§		1.0u	4.0u		BH		PD151 Ø
26	PBSITO4-520AS	2	400G*					8X♦	250m		2.8u		25m	5.0m§		1.0u	4.0u		BH		PD151a Ø
27	PBSITO4-40742	2	400G*		#			8X♦	250m		2.8u		25m	5.0m§		1.0u	4.0u		BH		PD152 Ø
28	PBSITO4-44782	2	400G*		#			8X♦	250m		2.8u		25m	5.0m§		1.0u	4.0u		BH		PD153 Ø
29	GECU2-9145-1	2	15G*		⊠			UX♦	300m		21u		4.9m	100n§		2.0u	30u		BM		PD154 Ø
30	LIODS-HF	2	1.5u	10	.25 Ø			5C	.40		900n	10	1.3k*	7.5n#	400p	300n	1.1u	.30p	AD		None
31	GEAU1-40A	2	3.0G*					KX♦	400m				1.5m	100n§		1.0u	10u		BJ		PD147 Ø
32	GEAU1-60A	2	3.0G*					KX♦	400m				1.5m	100n§		1.0u	10u		BJ		PD148 Ø
33	GEAU2-40A	2	3.0G*					KX♦	400m				3.0m	100n§		1.0u	10u		BJ		PD147 Ø
34	GEAU2-60A	2	3.0G*					KX♦	400m				3.0m	100n§		1.0u	10u		BJ		PD148 Ø
35	GEAU-.5-40A	2	3.0G*					KX♦	400m				774u	100n§		1.0u	10u		BJ		PD147 Ø
36	GEAU-.5-60A	2	3.0G*					KX♦	400m				774u	100n§		1.0u	10u		BJ		PD148 Ø
37	GECD1-9145-1	2	20G*		⊠			UX♦	500m		19u		1.2m	100n§		2.0u	23u		BN		PD154 Ø
38	GECD1-9145-2HS	2	20G*		§			UX♦	500m		19u		1.2m	100n§		2.0u	23u		BN		PD154b Ø
39	PBSATO1-10A	2	80G*					X2♦	500m	K	2.4u		1.6m	500u§		1.0u	3.5u		BH		PD471 ⊠
40	PBSITO2-520A	2	400G*					8X♦	500m		2.8u		6.2m	5.0m§		1.0u	4.0u		BH		PD151 Ø
41	PBSITO2-520AS	2	400G*					8X♦	500m		2.8u		6.2m	5.0m§		1.0u	4.0u		BH		PD151a Ø
42	PBSITO2-40742	2	400G*					8X♦	500m		2.8u		6.2m	5.0m§		1.0u	4.0u		BH		PD152 Ø
43	PBSITO2-44782	2	400G*					8X♦	500m		2.8u		6.2m	5.0m§		1.0u	4.0u		BH		PD153 Ø
44	FIL20C▼	2	150n	10	50 Ø			5C	.60 †		930n	10	20 *	350 #	60	300n	1.1u	.15p	AD		PD503
45	FIL100C	2	200n	10	5.0 Ø			5C	.60 †		930n	10	100 *	50n#	300p	300n	1.1u	.20p	AD		PD504
46	GECU1-9145-1	2	15G*		⊠			UX♦	600m		21u		1.2m	100n§		2.0u	30u		BM		PD154 Ø
47	INSB2-520A	2	50G*					KX♦	750m		5.0u		4.9m	200n§		2.0u	5.5u		BG		PD151 Ø
48	INSB2-520AS	2	50G*					KX♦	750m		5.0u		4.9m	200n§		2.0u	5.5u		BG		PD151a Ø
49	INSB2-40742	2	50G*					KX♦	750m		5.0u		4.9m	200n§		2.0u	5.5u		BG		PD152 Ø
50	INSB2-44782	2	80G*					KX♦	750m		5.0u		4.9m	200n§		2.0u	5.5u		BG		PD153 Ø
51	GEHG2-9145-1	2	10G*		⊠			UX♦	1.0		10u		4.9m	100n§		2.0u	14u		BK		PD154 Ø
52	GECD-.5-9145-1	2	20G*		⊠			UX♦	1.0		19u		304u	100n§		2.0u	23u		BN		PD154 Ø
53	GECD-.5-9145-2HS	2	20G*		§			UX♦	1.0		19u		304u	100n§		2.0u	23u		BN		PD154b Ø
54	PBSITO1-520A	2	400G*					8X♦	1.0		2.8u		1.6m	5.0m§		1.0u	4.0u		BH		PD151 Ø
55	PBSITO1-520AS	2	400G*					8X♦	1.0		2.8u		1.6m	5.0m§		1.0u	4.0u		BH		PD151a Ø
56	PBSITO1-40742	2	400G*		#			8X♦	1.0		2.8u		1.6m	5.0m§		1.0u	4.0u		BH		PD152 Ø
57	PBSITO1-44782	2	400G*		#			8X♦	1.0		2.8u		1.6m	5.0m§		1.0u	4.0u		BH		PD153 Ø
58	GECU-.5-9145-1	2	15G*		⊠			UX♦	1.2		21u		304u	100n§		2.0u	30u		BM		PD154 Ø
59	HGCDTE2-520AS(1)	2						KX♦	1.5		15u		6.2m	800n§					CG		PD151a Ø
60	HGCDTE2-40742(4)	2			#			KX♦	1.5		15u		6.2m	800n§					CG		PD152 Ø
61	HGCDTE2-44782(2)	2			#			KX♦	1.5		15u		6.2m	800n§					CG		PD153 Ø
62	HGCDTE1-520A(2)	2	5G*					KX♦	1.5		15u		6.2m	800n§					CG		PD151 Ø
63	HGCDTE1-520A(4)	2	10G*					KX♦	1.5		12u		6.2m	2.0u§					CG		PD151 Ø
64	HGCDTE2-520AS(4)	2	10G*					KX♦	1.5		12u		6.2m	2.0u§					CG		PD151a Ø
65	HGCDTE2-40742(3)	2	10G*		#			KX♦	1.5		12u		6.2m	2.0u§					CG		PD152 Ø
66	HGCDTE2-44782(3)	2	10G*		#			KX♦	1.5		12u		6.2m	2.0u§					CG		PD153 Ø
67	HGCDTE2-520AS(3)	2	30G*					8X♦	1.5		4.6u		6.2m	10u§					CG		PD151a Ø
68	HGCDTE2-40742(1)	2	30G*		#			8X♦	1.5		4.6u		6.2m	10u§					CG		PD152 Ø
69	HGCDTE2-44782(1)	2	30G*		#			8X♦	1.5		4.6u		6.2m	10u§					CG		PD153 Ø
70	INSB1-520AS	2	50G*					KX♦	1.5		5.0u		1.2m	200n§		2.0u	5.5u		BG		PD151a Ø

SYMBOLS AND CODES
EXPLAINED IN INTERPRETER

10. PHOTODIODES - Dewar-Type Detector (Cont'd)

IN ORDER OF: (1)TYPE (2) RESPONSIVITY
(3) MAX DARK CURRENT & (4) TYPE NUMBER

LINE No.	4 TYPE NUMBER	1 TYPE	3 MAX DARK CURR @ 25°C ID (A)	MAX RATINGS @ 25°C VR TEST (V)	PD (W)	VR (V)	IF (A)	TEMP RNG. CODE - +	2 MINIMUM RESPONSIVITY Re (A/W)	SOUR -CE	λ (m)	VR (V)	ACTIVE AREA Sq In	RESP. TIME (s)	CAPAC C (F)	SPECTRAL RANGE LOW λL (m)	HIGH λH (m)	NOISE EQ.PWR Pn Watt/ Hz1/2	MTL	LEAD CODE	DRAWING
1	INSB1-40742	2	50G*					KX♦	1.5		5.0u		1.2m	200n§		2.0u	5.5u		BG		PD152 Ø
2	INSB1-44782	2	50G*					KX♦	1.5		5.0u		1.2m	200n§		2.0u	5.5u		BG		PD153 Ø
3	INSB1-520A	2	80G*					KX♦	1.5		5.0u		1.2m	200n§		2.0u	5.5u		BG		PD151 Ø
4	INSB1-40A	2	50G*					KX♦	1.6 †		5.5u		1.2m	1.0u§		2.0u	5.5u		BG		PD147 Ø
5	INSB1-40AS	2	50G*					KX♦	1.6 †		5.5u		1.2m	1.0u§		2.0u	5.5u		BG		PD147a Ø
6	INSB1-60A	2	50G*					KX♦	1.6 †		5.5u		1.2m	1.0u§		2.0u	5.5u		BG		PD148 Ø
7	INSB1-60AS	2	50G*					KX♦	1.6 †		5.5u		1.2m	1.0u§		2.0u	5.5u		BG		PD148a Ø
8	INSB2-40A	2	50G*					KX♦	1.6 †		5.5u		4.8m	1.0u§		2.0u	5.5u		BG		PD147 Ø
9	INSB2-40AS	2	50G*					KX♦	1.6 †		5.5u		4.8m	1.0u§		2.0u	5.5u		BG		PD147a Ø
10	INSB2-60A	2	50G*					KX♦	1.6 †		5.5u		4.8m	1.0u§		2.0u	5.5u		BG		PD148 Ø
11	INSB2-60AS	2	50G*					KX♦	1.6 †		5.5u		4.8m	1.0u§		2.0u	5.5u		BG		PD148a Ø
12	GEHG1-9145-1	2	10G*		Ø			UX♦	2.0		10u		1.2m	100n§		2.0u	14u		BK		PD154 Ø
13	6802	2	55G*		$			x2	2.4 †				1.5m	200n§		1.0u	5.5u		BG		PD185 Ø
14	HGCDTE2-520AS(2)	2	10G*					KX♦	2.5		10u		4.9m	100n§					CG		PD151a Ø
15	HGCDTE2-40742(2)	2	10G*		#			KX♦	2.5		10u		4.9m	100n§					CG		PD152 Ø
16	HGCDTE2-44782(4)	2	10G*		#			KX♦	2.5		10u		4.9m	100n§					CG		PD153 Ø
17	HGCDTE1-520AS(3)	2	5G*					KX♦	3.0		15u		1.6m	800n§					CG		PD151a Ø
18	HGCDTE1-40742(4)	2	5G*		#			KX♦	3.0		15u		1.6m	800n§					CG		PD152 Ø
19	HGCDTE1-44782(3)	2	5G*		#			KX♦	3.0		15u		1.6m	800n§					CG		PD153 Ø
20	HGCDTE1-520AS(2)	2	10G*					KX♦	3.0		12u		1.6m	2.0u§					CG		PD151a Ø
21	HGCDTE1-40742(2)	2	10G*		#			KX♦	3.0		12u		1.6m	2.0u§					CG		PD152 Ø
22	HGCDTE1-44782(2)	2	10G*		#			KX♦	3.0		12u		1.6m	2.0u§					CG		PD153 Ø
23	HGCDTE1-40A	2	20G*					KX	3.0 †		13		1.5m	800n§		11u	13u		CG		PD147 Ø
24	HGCDTE1-40AS	2	20G*					KX	3.0 †		13		1.5m	800n§		11u	13u		CG		PD147a Ø
25	HGCDTE1-60A	2	20G*					KX	3.0 †		13		1.5m	800n§		11u	13u		CG		PD148 Ø
26	HGCDTE1-60AS	2	20G*					KX	3.0 †		13		1.5m	800n§		11u	13u		CG		PD148a Ø
27	HGCDTE-.5-40A	2	20G*					KX	3.0 †		13		774u	800n§		11u	13u		CG		PD147 Ø
28	HGCDTE-.5-40AS	2	20G*					KX	3.0 †		13		774u	800n§		11u	13u		CG		PD147a Ø
29	HGCDTE-.5-60A	2	20G*					KX	3.0 †		13		774u	800n§		11u	13u		CG		PD148 Ø
30	HGCDTE-.5-60AS	2	20G*					KX	3.0 †		13		774u	800n§		11u	13u		CG		PD148a Ø
31	HGCDTE1-520A(1)	2	30G*					8X♦	3.0		4.6u		1.6m	10u§					CG		PD151 Ø
32	HGCDTE1-520AS(4)	2	30G*					8X♦	3.0		4.6u		1.6m	10u§					CG		PD151a Ø
33	HGCDTE1-40742(3)	2	30G*		#			8X♦	3.0		4.6u		1.6m	10u§					CG		PD152 Ø
34	HGCDTE1-44782(5)	2	30G*		#			8X♦	3.0		4.6u		1.6m	10u§					CG		PD153 Ø
35	INSB-.5-520A	2	80G*					KX♦	3.0		5.0u		304u	200n§		2.0u	5.5u		BG		PD151 Ø
36	INSB-.5-520AS	2	80G*					KX♦	3.0		5.0u		304u	200n§		2.0u	5.5u		BG		PD151a Ø
37	INSB-.5-40742	2	80G*		#			KX♦	3.0		5.0u		304u	200n§		2.0u	5.5u		BG		PD152 Ø
38	INSB-.5-44782	2	80G*		#			KX♦	3.0		5.0u		304u	200n§		2.0u	5.5u		BG		PD153 Ø
39	GEHG-.5-9145-1	2	10G*		Ø			UX♦	4.0		10u		304u	100n§		2.0u	14u		BK		PD154 Ø
40	HGCDTE1-520A(3)	2	10G*					KX♦	5.0		10u		1.2m	100n§					CG		PD151 Ø
41	HGCDTE1-40742(5)	2	10G*		#			KX♦	5.0		10u		1.2m	100n§					CG		PD152 Ø
42	HGCDTE1-44782(4)	2	10G*		#			KX♦	5.0		10u		1.2m	100n§					CG		PD153 Ø
43	HGCDTE-.5-40742(2)	2	5G*		#			KX♦	6.0		15u		388u	800n§					CG		PD152 Ø
44	HGCDTE-.5-44782(3)	2	5G*		#			KX♦	6.0		15u		388u	800n§					CG		PD153 Ø
45	HGCDTE-.5-520A(4)	2	5G*					KX♦	6.0		15u		388u	800n§					CG		PD151 Ø
46	HGCDTE-.5-520AS(4)	2	5G*					KX♦	6.0		15u		388u	800n§					CG		PD151a Ø
47	HGCDTE-.5-40742(5)	2	10G*		#			KX♦	6.0		12u		388u	2.0u§					CG		PD152 Ø
48	HGCDTE-.5-44782(2)	2	10G*		#			KX♦	6.0		12u		388u	2.0u§					CG		PD153 Ø
49	HGCDTE-.5-520A(3)	2	10G*					KX♦	6.0		12u		388u	2.0u§					CG		PD151 Ø
50	HGCDTE-.5-520AS(2)	2	10G*					KX♦	6.0		12u		388u	2.0u§					CG		PD151a Ø
51	HGCDTE-.5-40742(3)	2	30G*		#			8X♦	6.0		4.6u		388u	10u§					CG		PD152 Ø
52	HGCDTE-.5-44782(5)	2	30G*		#			8X♦	6.0		4.6u		388u	10u§					CG		PD153 Ø
53	HGCDTE-.5-520A(2)	2	30G*					8X♦	6.0		4.6u		388u	10u§					CG		PD151 Ø
54	HGCDTE-.5-520AS(5)	2	30G*					8X♦	6.0		4.6u		388u	10u§					CG		PD151a Ø
55	HGCDTE-.5-40742(4)	2	10G*		#			KX♦	10		10u		304u	100n§					CG		PD152 Ø
56	HGCDTE-.5-44782(4)	2	10G*		#			KX♦	10		10u		304u	100n§					CG		PD153 Ø
57	HGCDTE-.5-520A(1)	2	10G*					KX♦	10		10u		304u	100n§					CG		PD151 Ø
58	HGCDTE-.5-520AS(3)	2	10G*					KX♦	10		10u		304u	100n§					CG		PD151a Ø
59	PBSEITO1-40A	2	30G*					8X♦	3.0kØ				1.2m	50u§		1.0u	6.0u		BS		PD147 Ø
60	PBSEITO1-40AS	2	30G*					8X♦	3.0kØ				1.2m	50u§		1.0u	6.0u		BS		PD147a Ø
61	PBSEITO1-60A	2	30G*					8X♦	3.0kØ				1.2m	50u§		1.0u	6.0u		BS		PD148 Ø
62	PBSEITO1-60AS	2	30G*					8X♦	3.0kØ				1.2m	50u§		1.0u	6.0u		BS		PD148a Ø
63	PBSEITO2-40A	2	30G*					8X♦	3.0kØ				4.8m	50u§		1.0u	6.0u		BS		PD147 Ø
64	PBSEITO2-40AS	2	30G*					8X♦	3.0kØ				4.8m	50u§		1.0u	6.0u		BS		PD147a Ø
65	PBSEITO2-60A	2	30G*					8X♦	3.0kØ				4.8m	50u§		1.0u	6.0u		BS		PD148 Ø
66	PBSEITO2-60AS	2	30G*					8X♦	3.0kØ				4.8m	50u§		1.0u	6.0u		BS		PD148a Ø

SYMBOLS AND CODES
EXPLAINED IN INTERPRETER

10. PHOTODIODES - Dewar-Type Detector (Cont'd)

IN ORDER OF: (1)TYPE (2) RESPONSIVITY (3) MAX DARK CURRENT & (4) TYPE NUMBER

LINE No.	TYPE NUMBER	1 TYPE	3 MAX DARK CURR @ 25°C ID (A)	VR TEST (V)	MAX RATINGS @ 25°C PD (W)	VR (V)	IF (A)	TEMP RNG. CODE - +	2 MINIMUM RESPONSIVITY Re (A/W)	SOUR-CE	λ (m)	VR (V)	ACTIVE AREA Sq In	RESP. TIME (s)	CAPAC C (F)	SPECTRAL RANGE LOW λL (m)	HIGH λH (m)	NOISE EQ.PWR Pn Watt/Hz1/2	MTL	LEAD CODE	DRAWING
1	PBSEITO-.5-40A	2	30G*					8X♦	3.0kØ				304u	50u§		1.0u	6.0u		BS		PD147 Ø
2	PBSEITO-.5-40AS	2	30G*					8X♦	3.0kØ				304u	50u§		1.0u	6.0u		BS		PD147a Ø
3	PBSEITO-.5-520A	2	30G*					8X♦	3.0kØ				304u	50u§		1.0u	6.0u		BS		PD151 Ø
4	PBSEITO-.5-520AS	2	30G*					8X♦	3.0kØ				304u	50u§		1.0u	6.0u		BS		PD151a Ø
5	PBSEITO-.5-60A	2	30G*					8X♦	3.0kØ				304u	50u§		1.0u	6.0u		BS		PD148 Ø
6	PBSEITO-.5-60AS	2	30G*					8X♦	3.0kØ				304u	50u§		1.0u	6.0u		BS		PD148a Ø
7	PBSLTO1-40A	2	100G*					KX♦	300kØ				1.2m	3.0m§		1.0u	4.5u		BH		PD147 Ø
8	PBSLTO1-40AS	2	100G*					KX♦	300kØ				1.2m	3.0m§		1.0u	4.5u		BH		PD147a Ø
9	PBSLTO1-60A	2	100G*					KX♦	300kØ				1.2m	3.0m§		1.0u	4.5u		BH		PD148 Ø
10	PBSLTO1-60AS	2	100G*					KX♦	300kØ				1.2m	3.0m§		1.0u	4.5u		BH		PD148a Ø
11	PBSITO1-40A	2	400G*					8X♦	5.0MØ				1.2m	5.0m§		1.0u	4.0u		BH		PD147 Ø
12	PBSITO1-40AS	2	400G*					8X♦	5.0MØ				1.2m	5.0m§		1.0u	4.0u		BH		PD147a Ø
13	PBSITO1-60A	2	400G*					8X♦	5.0MØ				1.2m	5.0m§		1.0u	4.0u		BH		PD148 Ø
14	PBSITO1-60AS	2	400G*					8X♦	5.0MØ				1.2m	5.0m§		1.0u	4.0u		BH		PD148a Ø

PHOTODIODE, LASER DETECTOR

18	FLD130D1SJ	3				2.0	100m	45						.50n#		1.2n	1.3n		XX		PD1043
19	450-1	3						48	500n				1.0 *	2.0n#	30p				ED		TO-5
20	450-2	3						08	0.5u										XX		TO-5
21	450-3	3						08	0.5u										XX		TO-5
22	450-4	3						48	500n				1.0 *	2.0n#	150p				ED		None
23	450-5	3						48	500n				1.0 *	2.0n#	300p				ED		None
24	350-1	3						48	1.5u				1.0 *	10n#	250p				XX		TO-5
25	350-2	3						08	1.5u										XX		TO-5
26	350-3	3						08	1.5u										XX		TO-5
27	350-4	3						48	1.5u				1.0 *	10n#	1.3n				XX		None
28	350-5	3						48	1.5u				1.0 *	10n#	1.5n				XX		None
29	NSL5760	3	5u	0.1			525m	36	.22	A	900n		.16		4.5n	850n	1.1u		AD		None Ø
30	PN4-27LD	3							350m†	C	900n		44 *			420n	1.1u		AD		CH *
31	PN4-46LD	3							350m†	C	900n		31 *			420n	1.1u		AD		CH *
32	PN4-125LD	3							350m†	C	900n		133 *			420n	1.1u		AD		CH *
33	PN4-150LD	3							350m†	C	900n		1.9 *			420n	1.1u		AD		CH *
34	PN4-254LD	3							350m†	C	900n		17 *			420n	1.1u		AD		CH *
35	YAG100	3	75n	180		250			650m		900n		8.0m	10n	5.0p	350n	1.1u		AD	D	PD22
36	YAG444	3	600n	180		250			650m		900n		.15	10n	50p	350n	1.1u		AD	D	PD23
37	YAG444-4	3	600n	180		250			650m		900n		.15	10n	50p	350n	1.1u		AD	D	PD23b

PHOTODIODE, PIN

41	MFOD71		10n	20	100m	100		48	.15	A		5.0	1.0 *	5.0n	3.0p	600n	1.0u		AD	B	PT129
42	BPW50	AD	30n	10	150m	32		A §			930m	5	5m*	50n	17p	930n$			AD	A ♦	PD535 ☑
43	LPS06B50	4	0.3n†	15	100m			38					.65 *		3.0p#				XX		PD520
44	LPS06B55	4	0.3n†	15	100m			38					.65 *		3.0p#				XX		PD520
45	LPT06B50	4	0.3n†	15	100m			38					.65 *		3p#				XX		PD1122
46	LPT06B55	4	0.3n	15	100m			38					.65 *		3p#				XX		PD1122
47	BPF24(A)▼	4	0.8n	15	100m	50		5C♦	§		850n	15		1.0n#	2.5p	750n$	750n		AD	Z ♦	TO-46 Ø
48	MI11H	4	1.0n	10	25m	30		28						50n		400n	1.2u		AD		PD8b
49	MI11HL	4	1.0n	10	25m	30		28						50n		400n	1.2u		AD		PD12m
50	FID08T42WS	4	3.0n	20		50	100m	48							2.0p	830n	830n		AD	B	PD960
51	S181P	4	5.0n	20	180m	50		2A					.64 *	7.0n#	6.0p	550n	1.0u		AD	B	PD998
52	S191P	4	5.0n	20	180m	50		2A					.64 *	7.0n#	6.0p	550n	1.0u		AD	B	PD14c
53	BPW43	4	10n	10	150m	32		2A%					.25 *	4.0n#	2.5p	500n	1.0u		AD	B	PD232h
54	PD43PI	4	10n	10				28					.53 *	0.1u					XX		None ☑
55	PN300	4	10n	10	100m	50		3A%						1.0n	7.0p				AD	A	PD445
56	PN300F	4	10n	10	100m	50		3A%						1.0n	7.0p				AD	A	PD8d Ø
57	SFH250(A)	4	10n	20	100m	30		5A%						10n#	11p	400n	1.1u	290f	AD	A ♦	PD1412 Ø
58	BPW41(A)	4	30n	10	150m	32		38%					7.5 *	50n	25p	730n	1.0u	10f	AD		PD526
59	BPW41N	4	30n	10	150m	32		38%					7.5 *	50n	25p	820n	1.0u	10f	AD		PD526
60	BPW46	4	30n	10	150m	32		38%					7.5 *	50n	25p#	500n	1.0u	10f	AD	B	PD535
61	BPW82	4	30n	10	150m	32		38%					7.5 *	50n	40p	750n	1.0u	10f	BC		PD1187
62	BPW83	4	30n	10	150m	32		38%					7.5 *	50n	40p	750n	1.0u		BC		PD1002a
63	BPW84	4	30n	10	150m	32		38%					7.5 *	50n	40p	750n	1.0u		BC		PD1188
64	LTR516AB	4	30n	10	150m	30		5A						50n#	25p			4.4	AD	B	PD1283
65	LTR526AB	4	30n	10	150m	30		5A						50n#	25p			4.4	AD	B	PD1283
66	LTR536AB	4	30n	10	150m	30		5A						50n#	25p			4.4	AD	A	PD1367
67	OP913	4	30n	10		33				E				50n#					NAD	A §	PD7t Ø
68	OP913W	4	30n	10		33				E				50n#					NAD	A §	PD14d
69	PD41PI	4	30n	10	100m			28					5.7 *	100n#	65p	700n	1.1u		AD		PD281
70	PD46PI	4	30n	10	100m			48					5.7 *	100n#	55p	700n	1.1u		AD		PD487
71	S153P	4	30n	10	300m	50		2A					7.5 *	50n	75p	550n	1.0u	10f	AD	A	PD14
72	S186P	4	30n	10	150m	32		38%					7.5 *	50n	25p	730n	1.0u	10f	AD		PD1002
73	CEN1210	4	50n	10	150m	30		2A				10	1.4m		140p	450n	1.0u		AD	A	PT142
74	CEN1211	4	50n	10	100m	30		28				10	1.4m		140p	450n	1.0u		AD	A	PT143
75	CEN1220	4	50n	10		30						10	1.4m		140p	450n	1.0u		AD	A	PT47d
76	MI33H	4	50n	10	200m	32		28						300n		400n	1.2u		AD		PD14
77	MI33HL	4	50n	10	200m	32		28						300n		400n	1.2u		AD		PD1095
78	PN303	4	50n	10	100m	30		29						50n	70p				AD	A	PD14 Ø
79	PN307	4	50n	10	10m	30		28								800n$			AD	B	PD914
80	HPI1K1	4	100n	1.0		40		3A			920n		1.4 *		5.0p	450n	1.0u		AD	A §	PD169n
81	FID13R13WX	4	15u	10		50	500m	4A							10p	1.3u	1.3u		AB	E	PD959
82	PN311H	4	1.0n	1.0	30m	30		28	7.0n$	A	900n	10		3.0u*	10p	940n$			AD	♦	PD1074
83	BPX90K	4	200n	10	100m	32		48%	8.0n§	C		5.0	5.0 *	1.3u	430p	800n	1.1u		AD	A	PD144g ☑
84	PN312D	4	20n	10	30m	30		28	9.0n†$	A	900n	10		10n*	5.0p	940n$			AD	♦	PD1074
85	BPX66	4	0.3n†	10	250m	50		5C§	11n§	C		5.0	970m*	30n#	11p	350n	1.1u	33f	AD	A ♦	PD8g Ø
86	VTP100	4	30n	10		30		4A	40n$	A	940n	10		100n#	35p				XX		PD1022
87	VTP100A	4	30n	10		30		4A	40n$	A	940n	10		100n#	35p				XX		PD1022a
88	PD50PI	4	100n	30	50m	100		3A	40n§	B		5.0	1.4m	80n	15p	400n	1.1u		AD	A	PD7n Ø
89	PD80PI	4	10n	10	200m	50		3A	180n§	B		5.0	6.8m	200n	40p	400n	1.1u		AD	A	PD7p Ø
90	MFOD3100▼	4	1.0n	5.0	50m	50		4A	.20u		815	5.0		2.0n	5.0p			50f		AS	PD1197 Ø
91	MFOD1100	4	1.0n	5.0	50m	50		6C	300n		815	5.0	12m§	1.0n	2.5p	620n	920n			Z	TO-52
92	TPS708	4	10n	10	100	50		4C	2.0u	E	850n			2n	50	850n$			AD	♦	PD1106
93	PIN10AP	4	1.0u	10					2.0u§				155m	30n#	350p				Si		PD166c Ø
94	PIN10RP	4	1.0u	10					2.0u§				155m	30n#	350p	580n	720n		Si		PD166c Ø
95	PH309	4	30n	10	150m	20		38§	50u†§		940n	5	5.3 *	30n#	11p	880n	1.0u		XX	A	PD1245
96	PN316C	4	1n	10	30m	30		28	0.1m†$	A	900n	10		3n*	2p	900n$			AD	♦	PD1076
97	MRD510	4	2.0n	20	100m	100		6M§	400u†$	E		20		1.0n	4.0p	800n			AD	A	PD8 Ø
98	C30952F	4						47	0.8mØ		830n			4n		400n	1.0p	15p	AD		PD1034
99	C30952FL	4						47	0.8mØ		830n			4n		400n	1.0p	15p	AD		PD1035
100	PN330CL	4	10n	10	100m	50		28	1.3m†$	A	850n	10		20n*	5p	850n$			AD	A	PD7x
101	MRD500	4	2.0n	20	100m	100		6M§	1.8m†$	E		20		1.0n	4.0p	800n			AD	A §	PD7 Ø
102	C30952G	4						47	2.5mØ		830n			2n		400n	1.0p	50p	AD		PD1034
103	C30952E	4						47	3.0mØ		830n			7n		400n	1.0p	3.9p	AD		PD1034
104	C30952EL	4						47	3.0mØ		830n			7n		400n	1.0p	3.9p	AD		PD1035

SYMBOLS AND CODES EXPLAINED IN INTERPRETER

10. PHOTODIODES - PIN (Cont'd)

IN ORDER OF: (1)TYPE (2) RESPONSIVITY
(3) MAX DARK CURRENT & (4) TYPE NUMBER

LINE No.	4 TYPE NUMBER	1 TYPE	3 MAX DARK CURR @ 25°C ID (A)	VR TEST (V)	MAX RATINGS @ 25°C PD (W)	VR (V)	IF (A)	TEMP RNG. CODE - +	2 MINIMUM RESPONSIVITY Re (A/W)	SOUR-CE	λ (m)	VR (V)	ACTIVE AREA Sq In	RESP. TIME (s)	CAPAC C (F)	SPECTRAL RANGE LOW λL (m)	HIGH λH (m)	NOISE EQ.PWR Pn Watt/Hz1/2	MTL	LEAD CODE	DRAWING
1	C30986EQC01	4						47	3.0m∅		1.3u			1.5n		900n	1.7p		CJ		PD1036a
2	C30986E	4						47	4.0m∅		1.3u			1.5n		900n	1.7p		CJ		PD1036
3	PN322D	4	10n	10	30m	30		28	4.0m†$	A	900n	10		10n*	3p	920n$			AD	♦	PD1074
4	PN302E	4	10n	10	30m	30		3A	5.0m†$	A	800n	10	1.8 *	10n*	3.0p	900n$			AD	♦	PD1289
5	TPS703	4	30n	10	100m	20		38	5.0m	D			12m	100n#	15p	700n	1.2u		AD	A	PD495
6	PN312E	4	10n	10	30m	30		28	7.0m†$	A	900n	10		10n*	3.0p	900n$			AD	♦	PD1074
7	PN311	4	0.3n	10	30m	30		28	10m†$	A	900n	10		1.0u*	10p	940n$			AD	♦	PD1074
8	PN312C	4	20n	10	30m	30		28	10m†$	A	900n	10		10n*	15p	900n$			AD	♦	PD1074
9	PN302H	4	30n	10	50m	30		3A	15m†$	A	900n	10	5.2 *	10n*	8.0p	900n$			AD	♦	PD1289a
10	PN321C	4	2.0n	1.0	30m	30		28	20m†$	A	900n	10	3.0 *	5.0u#	12p	940n$			AD	♦	PD1074
11	C30952GL	4						47	25m∅		830n			2n		400n	1.0p	50p	AD		PD1035
12	PN313	4	10n	10	100m	30		28	25m†$	A	900n	10		50n*	70p	900n$			AD	B	PD1075
13	PN324E	4	50n	10	50m	30		3A	35m†$	A	900n	10		30n*	20p	900n$			AD	♦	PD1077
14	PN313B	4	50n	10	100m	30		38	40m	A	900n	10	7.6 *	500n#	70p	960n$			AD	♦	PD1075
15	PN323B	4	50n	10	100m	30		38	40m†$	A	900n	10		5.0u#	70p	960n$			AD	A	PD1291
16	TIL100(A)	4	50n	10	150m	30 †		2A	40m$		940n	10	8.8 *	100n#	50p	915n	975n		AD	A	PD418 ∅
17	PN323	4	50n	10	100m	30		38	45m†$	A	900n	10		5.0u#	70p	900n$			AD	A	PD1291
18	PIN10DF	4	1.0u	10					100m				155m	30n#	350p	450n	950n		Si		PD166d ∅
19	UDT-UV005	4							.15		254		.5 *		300p			80f	XX		TO-5
20	UDT-UV20	4							.15		254		2 *		1.0n			100f	XX		TO-8
21	UDT-UV35	4							.15		254		3.5 *		1.6n			150f	XX		TO-8
22	UDT-UV35P	4							.15		254		3.5 *		1.6n			150f	XX		TO-8
23	UDT-UV50	4							.15		254		3.5 *		2.5n			180f	XX		PD300
24	UDT-UV50L	4							.15		254		5 *		2.5n			180f	XX		PD264
25	UDT-UV100	4							.15		254		10		4.5n			250f	XX		PD300
26	UDT-UV100L	4							.15		254		10 *		4.5n			250f	XX		PD264
27	SD3322-002▼	4	1.5n	30		30		5C∅	150m		820n			3.0n#	2.0p	570n	960n		AD	Z	PD22h
28	SD3322-102▼	4	1.5n	30		30		5C∅	150m		820n			3.0n#	2.0p	570n	960n		AD	Z	PD22h
29	PIN5DP-SB	4							.16		410		.5 *		450p			70f	AD		TO-5
30	PIN10DP-SB	4							.16		410		.04		8.8n			45f	AD		PD300
31	PIN10DPISB	4							.16		410		.04		8.8n			45f	AD		PD297
32	UDT220SB	4							.16		410		.08		17n			2.5p	AD		PD462
33	OSD60-3T	4	360n	60				57	.18		450n		60 *	10n#	275p			620f	CB		TO-8
34	S213P	4	5.0n	50	210m	110		5A%	200m†		950n	5.0		400n#	1.8p	570n	940	58f	BC	A	PD14q
35	S219P	4	10n	50	150m	110		5A%	200m		950n	5.0		300n#	1.8p	570	940	1.3p	BC	B	PD998
36	S2227	4	1.0n	5.0				28	250m		830n		125 *	1.0n	1.5p	400n	1.0u		AD	X	PD42ab ∅
37	PIN6LC	4	1.0u	10		50			250m		850n		17m	8.0n#	20p			60p#	AD		PD167 ∅
38	PIN10	4	1.0u	10		100			250m		850n		193m	10n#	400p			1.0p#	AD		PD166a ∅
39	PIN8LC	4	1.5u	10		50			250m		850n		155m	10n#	100p			1.0p#	AD		PD166a ∅
40	PIN25	4	10u	10		100			250m		850n		950m	50n#	900p			5.0p#	AD		PD166b ∅
41	PIN-L4	4	10u	10		50			250m		850n		403m		900p			10p#	AD		PD168 ∅
42	PIN-L9	4	20u	10		50			250m		850n		775m		1.9n			50p#	AD		PD168a ∅
43	C30971EL	4	100u		100m	200	5.0m	47	.25		900n		0.2 *	.50n#	1.6p	400n	1.0u	.60p*	XX	A	TO-18
44	PIN3DP	4				5.0		5C	300m		850n		1.0u		300p	300n	1.1u	200f	AD	A	PD8h ∅
45	PIN5DP	4				5.0		5C	300m		850n		7.9m	1.0u	500p	300n	1.1u	500f	AD	A	PD8j ∅
46	PIN6DP	4				5.0		5C	300m		850n		31m	1.0u	1.8n	300n	1.1u	800f	AD	A	PD165 ∅
47	PIN10DP	4				5.0		07	300m		850n		155m	1.0u	2.4n	300n	1.1u	1.0p	AD	A	PD166 ∅
48	PIN125DPL	4				5.0		57	300m		850n		2.4m	1.0u#	30p	300n	1.0u	100f	AD		PD461
49	HFD3002-002▼	4	2.0n	5.0	200m	250 †		6F%	300m†	A	850n		30m§	30n#	1.4p	650n	950n		AD	Z ♦	PD95 ∅
50	HFD3002-102▼	4	2.0n	5.0	200m	250 †		6F%	300m†	A	850n		30m§	30n#	1.4p	650n	950n		AD	Z ♦	PD95 ∅
51	PIN3D	4	50n	10		50		5C	300m		850n	10	4.9m	15n	10p	300n	1.1u	200f	AD	A	PD8h ∅
52	PIN5D	4	250n	10		50		5C	300m		850n	10	7.9m	15n	15p	300n	1.1u	500f	AD	A	PD8j ∅
53	PIN6D	4	400n	10		50		5C	300m		850n	10	31m	15n	60p	300n	1.1u	800f	AD	A	PD165 ∅
54	PIN220DP	4	1.0u			50		57	300m		850n		310m	500u	2.0n			140f	AD		PD462
55	PIN10D	4	1.5u	10		50		07	300m		850n	10	155m	25n	350p	300n	1.1u	1.0p	AD	A	PD166 ∅
56	BPW87	4	5.0n	50	210m	60		5A%	350m†		950n	5.0		600u#	1.8p	560n	960n	36f	BC	A	PD14q
57	BPW89	4	5.0n	50	210m	60		5A%	350m†		950n	5.0		600p#	1.8p	560n	960n	36f	BC	A	PD14q
58	SFH202A(A)	4	5.0n	20		50		48%	350m$		950n	20	1.0 *	3.0n#	13p	400n	1.1u	330p	AD	A	TO-18 ∅
59	5082-4220	4	5.0n	25	100m	50		5C	370m		770n		0.2 *	300n				93f	AD	A	PD8a
60	OP905F	4	30n	10	150m	33		48	370m†	E	850n	38	7.5 *	200n	150p	700n	1.2u	50f	AD		PD278b
61	SD4498▼	4	5.0n	5.0		50		4C	.38		820n			30n#	5.5p	760n	1.0u		AD	A	PD1287
62	SD4478▼	4	20n	100		50		4C	.38		820n			5.0n#	4.0p	520n	1.0u		AD	A	PD1287
63	BPW44	4			300m	50		5C%	400m		830n	10		200p	2.5p	830n$		100f	AD	V	TO-46
64	BPW45	4			300m	50		5C%	400m		830n	10		1.0n	20p	830n$		71f	AD	V	TO-46
65	S2216-01	4	150p	5.0				28	400m		830n		250m*	1.0n	2.5p	350n	1.1u		AD	X	PD42ab ∅
66	S2216-02	4	500p	5.0				28	400m		830n		125 *	1.0n	1.5p	350n	1.1u		AD	X	PD42ab ∅
67	PD2101	4	4.0n	10		30	10m	4A∅	0.4		850n	5.0	.27 *	2.0n#	5.0p	800n	900n		AD		PD1409
68	SD3498▼	4	5.0n	5.0		50		5C	.40		820n			30n#	4.9p	760n	1.0u		AD	Z	PD95
69	HPI1K3	4	100n	5.0		40		2A	400m†	C	920n		1.4 *		5.0p	450n	1.0u		AD	A §	PD169n
70	HPI2C	4	1.0u	5.0		20		27	400m†	C	920n		1.4 *		5.0p	450n	1.0u		AD	A	PD1138
71	HPI2CRII	4	1.0u	10		20		27	400m†	C	940n		2.6 *		10p	700n	1.0u		AD	A	PD1138
72	C30971E	4	100u		100m	200	5.0m	47	.40		900n		0.2 *	.50n#	1.6p	400n	1.0u	.60p*	XX	A	TO-18
73	E5100	4	100p†			25			420m				.20 *	5.0n				6.0f	AD		TO-18 ∅
74	PIN020A	4	150p	5.0		25			420m		800n		310u	5.0n	5.0p			6.0f#	AD	S	PD78 ∅
75	PIN040A	4	400p	5.0		25			420m		800n		1.2m	5.0n	20p			100p#	AD	S	PD78 ∅
76	PIN020B	4	800p	5.0		25			420m		800n		310u	5.0n	5.0p			200p#	AD	S	PD78 ∅
77	E5102	4	1.0n†			25			420m				.20 *	5.0n				200p	AD		TO-18 ∅
78	PIN040B	4	4.0n	5.0		25			420m		800n		1.2m	5.0n	20p			900p#	AD	S	PD78 ∅
79	E5103	4	10n†			50			420m				.30 *	15n				20p	AD		TO-18 ∅
80	5082-4204	4	600p	10	100m	50		5C	430m		770n		0.2 *	300n				32f	AD	S	PD78
81	5082-4203	4	2.0n	25	100m	50		5C	430m		770n		0.2 *	300n				59f	AD	S	PD78
82	5082-4207	4	2.5n	10	100m	50		5C	430m		770n		0.8 *	300n				66f	AD	S	PD78
83	PIN2P-I	4	10n	10		25	10u	2 ♦	.45		850n					350n			XX	X	PD42w
84	SD3478▼	4	20n	100	200m	125		5C	.45		820n			5.0n#	4.4p	730n	980n		AD	Z	PD95
85	010PIN-TO5	4	150n	100		200			450m		905n	100	15m	4.0n#	13p	400n	1.1u	490f	AD	A	PD302 ∅
86	050PIN-RM	4	1.0u	100		200			450m		905n	100	77m	80n#	31p	400n	1.1u	1.3p	AD	A	PD301a
87	100PIN-BNC	4	1.5u	100		200			450m		905n	100	155m	11n#	63p	400n	1.1u	1.5p	AD	A	PD300 ∅
88	100PIN-PP	4	1.5u	100		200			450m		905n	100	155m	11n#	63p	400n	1.1u	1.5p	AD	A	PD303 ∅
89	100PIN-RM	4	1.5u	100		200			450m		905n	100	155m	11n#	63p	400n	1.1u	1.5p	AD	A	PD301 ∅
90	200PIN-BNC	4	2.5u	100		200			450m		905n	100	310m	18n	120p	400n	1.1u	2.0p	AD	A	PD300a ∅
91	200PIN-PP	4	2.5u	100		200			450m		905n	100	310m	18n	120p	400n	1.1u	2.0	AD	A	PD303 ∅
92	200PIN-RM	4	2.5u	100		200			450m		905n	100	310m	18n	120p	400n	1.1u	2.0p	AD	A	PD301a ∅
93	400PIN-RM	4	5.0u	100		200			450m		905n		620m	35n#	250p	400n	1.1u	2.8p	AD	A	PD301b ∅
94	600PIN-RM	4	10u	100		200			450m		905n	100	930m	48n#	350p	400n	1.1u	4.0p	AD	A	PD301c ∅
95	800PIN-RM	4	12u	100		200			450m		905n	100	1.2	60n#	450p	400n	1.1u	4.4p	AD	A	PD301d ∅
96	F0-04E	4		10		100		38	0.5		900n		.81	4.0n	4p			100f	AD	X	PD613 ∅
97	F0-30E	4		10		50		38	0.5		900n		3.2	30n	10p			200f	AD	X	PD613 ∅
98	VTP4050S	4				140			0.5	A	940n	5.0	12m		120p	400n	1.1u		AD		TO-5
99	VTP8350S	4				140			0.5	A	940n	5.0	12m		120p	400n	1.1u		AD		TO-5
100	S2010(2)	4	200p	5.0				28	500m		830n		125 *	1.0n	1.0p	320n	1.1u	20p	AD	X	PD42ab ∅
101	CD11H	4	1.0n	10	25m	30		28	500m	C	950n	30	1.5m	50n	4.0p	400n	1.1u		AD	A	PD1157
102	F0-02-200	4	1.0n	10		100		38	0.5		900n		.20	2.0n	4p			50f	AD	Z	PD612 ∅
103	F0-02-400	4	1.0n	10		100		38	0.5		900n		.20	2.0n	4p			500f	AD	Z	PD612 ∅
104	F0-02E	4	1.0n	10		100		38	0.5		900n		.20	2.0n	2p			50f	AD	X	PD613 ∅
105	L4501	4	1.0n	6.0		6.0	10m	X8	500m		850n	6.0	4.7u	6.0p§	.80p	500n	1.0u	100f#	AD		PD271 ∅
106	L4502(2)	4	1.0n	6.0		6.0	10m	X8	500m		850n	6.0	16u	10p§	2.5p	500n	1.0u	100f#	AD		PD271 ∅
107	VTP1013	4	1.5n	15		140		6C	0.5	A	940n	15	2.6m	50n	6.0p	650n	1.1u		AD		TO-18
108	VTP1113	4	1.5n	15		140		6C	0.5	A	940n	15	2.6m	50n	6.0p	650n	1.1u		AD		TO-18
109	VTP9413	4	1.5n	15		140	100u	57	0.5	A	940n	15	2.6m	50n	5.0p	650n	1.1u		AD		PD265c
110	VTP8552	4	2.0n	10		33		48	0.5	A	940n	5.0	12m	50n	25p	650n	1.1u		AD		PD278c

SYMBOLS AND CODES
EXPLAINED IN INTERPRETER

10. PHOTODIODES - PIN (Cont'd)

IN ORDER OF: (1)TYPE (2) RESPONSIVITY
(3) MAX DARK CURRENT & (4) TYPE NUMBER

LINE No.	4 TYPE NUMBER	1 TYPE	3 MAX DARK CURR @ 25°C ID (A)	VR TEST (V)	MAX RATINGS @ 25°C PD (W)	VR (V)	IF (A)	TEMP RNG. CODE - +	2 MINIMUM RESPONSIVITY Re (A/W)	SOUR-CE	λ (m)	VR (V)	ACTIVE AREA Sq In	RESP. TIME (s)	CAPAC C (F)	SPECTRAL RANGE LOW λL (m)	HIGH λH (m)	NOISE EQ.PWR Pn Watt/ Hz1/2	M T L	LEAD CODE	DRAWING
1	VTP8652	4	2.0n	10		33		48	0.5	A	940n	5.0	12m	50n	25p	750n	1.1u		AD		PD278c
2	SGD040A	4	3.0n	100	200m	600 †		6F	500m	E	900n		1.2u	3.0n	2.0p	350n	1.1u		AD	D	PD22b Ø
3	SGD040B	4	3.0n	100	100m	600 †		6F	500m	E	900n		1.2u	3.0n	2.0p	350n	1.1u		AD	D	PD22c Ø
4	SGD040L	4	3.0n	100	200m	600 †		6F	500m	E	900n		1.2u	3.0n	2.0p	350n	1.1u		AD	D	PD22b Ø
5	VTP1250S	4	3.0n	10		150		57	0.5	A	940n	5.0	12m	50n	25p	750n	1.1u		AD	A	PD979
6	VTP8441	4	3n	50		140			0.5	A	940n	5.0	8.0m		15p	400n	1.1u		AD		TO-5
7	VTP5051	4	4.0n	15		140		6C	0.5	A	940n	15	12m	50n	24p	650n	1.1u		AD		TO-5
8	BPW24	4	5.0n	20	180m	50		2A	500m	C	900n	20	991u	3.0n	6.0p				AD	§	PD7 Ø
9	CD2014C	4	5.0n†	10		10		26	500m	C	950n	10	4.0m	300n	50p	400n	1.1u		AD	A	PD1161
10	VTP1012	4	7.0n	15		140		6C	0.5	A	940n	15	2.6m	50n	6.0p	650n	1.1u		AD		TO-18
11	VTP1112	4	7.0n	15		140		6C	0.5	A	940n	15	2.6m	50n	6.0p	650n	1.1u		AD		TO-18
12	VTP6061	4	7.0n	15		140		6C	0.5	A	940n	5.0	32m	100n	60p	650n	1.1u		AD		TO-8
13	VTP9412	4	7.0n	15		140	100u	57	0.5	A	940n	15	2.6m	50n	5.0p	650n	1.1u		AD		PD265c
14	C30957E	4	10n	10		100		48	0.5		900n			10n*	3.0p	400n	1.1p		AD		TO-18
15	PIN2D-I	4	10n	10		25	10u	2 ♦	.5		900n					350n			XX	X	PD42w
16	PN334	4	10n	10	100m	30		28	500m†	A	660n	10			7.0p	850n$			AD	A	PD1291
17	S1723-05	4	10n	30	100m	50	2.0m	26	500m		900n		100 *	15n	100p	190n	1.1u	20p	AD	♦	PD1156a☑
18	SGD100A	4	10n	100	200m	600 †		6F	500m	E	900n		7.9m	4.0n	4.0p	350n	1.1u		AD	D	PD22d Ø
19	VTP8440	4	15n	50		140			0.5	A	940n	5.0	8.0m		15p	400n	1.1u		AD		TO-5
20	VTP5050	4	18n	15		140		6C	0.5	A	940n	15	12m	50n	24p	650n	1.1u		AD		TO-5
21	VTP8351	4	18n	50		140			0.5	A	940n	5.0			24p	750n	1.1u		AD		TO-5
22	CD33H	4	30n	10	200m	32		28	500m	C	950n	30	14m	300n	60p	400n	1.1u		AD	A	PD1159
23	DT25	4	30n	90		450			500m		900u		7.9m	5.0n#	7.0p				AD	D	PD22 Ø
24	S1722-02	4	30n	100	50m	200	2.0m	26	500m		950n		13 *	1.0n	10p	190n	1.1u	10p	AD	B	PD108d Ø
25	VTP1150	4	30n	10		140			0.5	A	940n	5.0	12m		30p	400n	1.1u		AD		TO-5
26	VTP1250	4	30n	10		140			0.5	A	940n	5.0	12m		30p	750n	1.1u		AD		TO-5
27	VTP4050	4	30n	10		140			0.5	A	940n	5.0	12m		30p	400n	1.1u		AD		TO-5
28	VTP5041IR	4	30n	10		140			0.5	A	940n	5.0	8.0m		30p	750n	1.1u		AD		TO-5
29	VTP8350	4	30n	10		140			0.5	A	940n	5.0	12m		30p	750n	1.1u		AD		TO-5
30	VTP8551	4	30n	10		33		48	0.5	A	940n	5.0	12m	50n	25p	650n	1.1u		AD		PD278c
31	VTP8651	4	30n	10		33		48	0.5	A	940n	5.0	12m	50n	25p	750n	1.1u		AD		PD278c
32	VTP6060	4	35n	15		140		6C	0.5	A	940n	5.0	32m	100n	60p	650n	1.1u		AD		TO-8
33	CD33HF	4	50n	10	200m	32		28	500m	C	950n	30	14m	300n	60p	750n	1.1u		AD	A	PD1159
34	NSL530	4	50n	45	100m	100	10m	6C	500m	A	900n	45	.80 *	5.0n	2.5p	400n	1.1u	800f	AD	A	PD405 Ø
35	S1723-02	4	100n	30	100m	50	2.0m	26	500m		900n		100 *	15n	100p	190n	1.1u	20p	AD	♦	PD1156a☑
36	SGD200	4	100n			200		6C	.50		950n		20 *	8n#	14p	350n	1.1f	40n	AD	D	PD22e
37	010UV-PV-TO5	4	200n	10		100			500m		850n		15m			200n	1.1u	15p	XX	A Ø	PD22f Ø
38	DT110	4	400n	90		450			500m		900u		154m	10n#	100p				AD	D	PD21 Ø
39	050PIN-TO8	4	1.0u	100		200			500m		900n		77m	7.0n#	37p	350n	1.1u	25p	XX	F	PD21b Ø
40	100UV-PV-RM	4	2.0u	10		100			500m		850n		155m			200n	1.1u	40p	XX	B	PD177 Ø
41	NSL580	4	15u	45	200m	100	10m	6C	.50	A	900n	45	78m	8.0n	6.0p	400n	1.1u	150p	AD		PD405 Ø
42	SGD444	4	20m	100	2.0	600 †		6F	500m	E	900n		154m	10n	80p	350n	1.1u		AD	D	PD23 Ø
43	SGD444-2	4	20m	100	2.0	600 †		6F	500m	E	900n		154m	10n	80p	350n	1.1u		AD	D	PD23a Ø
44	SGD444-4	4	20m	100	2.0	600 †		6F	500m	E	900n		154m	10n	80p	350n	1.1u		AD	D	PD23b Ø
45	VTP1150S	4	3.0	10		150		57	0.5	A	940n	5.0	12m	50n	25p	750n	1.1u		AD	A	PD979
46	FID13R13ST	4	25u	10		15	200m	4A	.52		1.3u				30p				XX		PD1041
47	PN332F	4	1.0n	10	100m	30		2A	540m†	A	660n	10		1.0n#	2.0p	800n$			AD	A Ø	TO-46
48	PN330F	4	10n	10	100m	30		28	540m†	A	660n	10		2.0n#	7.0p	850n$			AD	A Ø	TO-46
49	PN335(2)	4	10n	10	100m	50		28	540m†	A	660n	10		2.0n#	5.0p	850n$			AD	A	PD1068
50	FIL3V▾	4				5.0 †		5C	.55 †		870n		3.2 *	45n#	290p	300n	1.1u	10f	AD		PD503
51	FIL5V▾	4				5.0 †		5C	.55 †		870n		5.0 *	90n#	450p	300n	1.1u	16f	AD		PD503
52	FIL20V	4			5.0 †			5C	.55 †		870n		20 *	.30u#	1.8n	300n	1.1u	33f	AD		PD503
53	FIL100V	4			5.0 †			5C	.55 †		870n		100 *	1.5u#	9.0n	300n	1.1u	59f	AD		PD504
54	AS7002	4	1.0n	-45		100	10m	68	550m$		900n	45	.03 *	500p#	1.0p	400n	1.1u	100f	AD	A	PD106a
55	CD11HL	4	1.0n	10	25m	30		28	550m	C	950n	30	1.5m	50n	4.0p	400n	1.1u		AD	A	PD1158
56	AS7005	4	2.5n	-45		100	10m	68	550m$		900n	45	0.2 *	2.0n#	1.5p	400n	1.1u	100f	AD	A	PD106a
57	BPW86	4	5.0n	50	210m	60		5A%	550m†		950n	5.0		2.5n#	1.2p	600n	1.0u	30f	BC	A	PD14q
58	BPW88	4	5.0n	50	210m	60		5A%	550m†		950n	5.0		2.5n#	1.2p	600n	1.0u	30f	BC	A	PD14q
59	BPX65	4	5.0n	20	230m	50		5C§	550m	C	850n	20	970m*	30u#	11p	350n	1.1u	33f	AD	A ♦	PD8g Ø
60	SFH202	4	5.0n	20	250m	50		48%	550m	C	850n	20	1.0 *	1.0n#	13p	400n	1.1u	330p	AD	A	PD455 Ø
61	AS7010	4	10n	-45		100	10m	68	550m$		900n	45	0.8 *	2.5n#	2.0p	400n	1.1u	100f	AD	A	PD106a
62	S1723-03	4	10n	30	100m	50	2.0m	26	550m		900n		100 *	15n	70p	400n	1.1u	20p	AD	♦	PD1156 ☑
63	S1723-04	4	10n	30	100m	50	2.0m	26	550m		900n		100 *	15n	70p	320n	1.1u	20p	AD	♦	PD1156 ☑
64	S1790-01	4	10n	30	100m	50	2.0m	26	550m		900n		100 *	15n	70p	320n	1.1u	20p	AD	♦	PD1156b☑
65	TEMD2100	4	10n	20	70m	60		5A%	550m†		950n	5.0	.64 *	2.5n#	1.2p	600n	1.0u		AD	B	PD1384
66	AS7025	4	25n	-45		100	10m	68	550m$		900n	45	5.0 *	5.0n#	5.0p	400n	1.1u	140f	AD	U	PD109
67	PINLSC5D	4	30n	10		200 †		5C	550m		920n		17m	600n#	110p	350n	1.1u	110f	XX		PD294 ☑
68	S1722	4	30n	100	50m	200	2.0m	26	550m		950n		13 *	1.0n	12p	400n	1.1u	10p	AD	B	PD108d Ø
69	S1722-01	4	30n	100	50m	200	2.0m	26	550m		950n		13 *	1.0n	12p	320n	1.1u	10p	AD	B	PD108d Ø
70	AS7050	4	50n	-45		100	10m	68	550m$		900n	45	20 *	7.0n#	12p	400n	1.1u	200f	AD		TO-8
71	CD33HL	4	50n	10	200m	32		28	550m	C	950n	30	14m	300n	60p	400n	1.1u		AD	A	PD1160
72	CD33HLF	4	50n	10	200m	32		28	550m	C	950n	30	14m	300n	60p	750n	1.1u		AD	A	PD1160
73	S1863	4	50n	100	50m	200	2.0m	26	550m		950n		24m	2.0n	17p	400n	1.1u	10p	AD	Y	PD108 Ø
74	AS7075	4	70n	-45		100	10m	68	550m$		900n	45	44 *	10n#	35p	400n	1.1u	220f	AD		TO-8
75	PINSC4D	4	100n	5.0		150 †		07	550m		850n		10m	400n#	9.0p	350n	1.1u	10p	XX		PD296 Ø
76	S1723(1)	4	100n	30	100m	50	2.0m	26	550m		900n		100 *	15n	70p	400n	1.1u	20p	AD	♦	PD1156 ☑
77	S1723-01	4	100n	30	100m	50	2.0m	26	550m		900n		100 *	15n	70p	320n	1.1u	20p	AD	♦	PD1156 ☑
78	S1790	4	100n	30	100m	50	2.0m	26	550m		900n		100 *	15n	70p	320n	1.1u	20p	AD	♦	PD1156b☑
79	AS7100	4	225n	-45		100	10m	68	550m$		900n	45	78 *	12n#	75p	400n	1.1u	400f	AD		PD105
80	PINLSC30D	4	1.0u	5.0		5.0		5C	550m		920n		188m	200n#	9.3n	350n	1.1u	110f	XX		PD295 ☑
81	PINSC10D	4	1.5u	5.0		150 †		07	550m		850n		160m	4.0u#	600p	350n	1.1u	10p	XX		PD297 Ø
82	BPW34B	4	2.0n	10	150m	32	100m	48%	570m	A	950n	5.0	7.3 *	400n#	72p	800n	1.1u	44f	AD	♦	PD278
83	BPW34F	4	2.0n	10	150m	32	100m	48%	570m	A	950n	5.0	7.3 *	400n#	72p	800n	1.1u	44f	AD	♦	PD278
84	SFH205	4	30n	10	150m	20		48%	570m	C	950n	5.0	7.3 *	350n#	72p	800n	1.1u	370p	AD	B	PD457 Ø
85	SFH205Q2	4	30n	10	150m	20		48%	570m	A	950n	5.0	7.3 *	350n#	72p	800n	1.1u		AD	V	TO-92
86	HFD3022▾	4	2.0n	5.0		250 †		4A%	580m†	A	850n		35m§	30n#	2.1p	750n	950n		AD	A ♦	PD1413 Ø
87	OP915F	4	30n	10	150m	33		48	580m†	E	950n	38	7.5 *	50n	30p	700n	1.2u	70f	AD		PD278b
88	BPW34	4	2.0n	10	150m	32	100m	48%	600m	C	850n	10	7.3 *	350n#	72p	400n	1.1u	41f	AD	A	PD144d ☑
89	AP4010	4	10n	180		225	10m	58	600m$		900n	180	0.8 *	1.0n#	1.0p	400n	1.1u	100f	AD	A	PD14h
90	FIL3C▾	4	20n	10		50		5C	.60 †		930n	10	3.2 *	6.0n#	10p	300n	1.1u	.10p	AD		PD503
91	AP4025	4	25n	180		225	10m	58	600m$		900n	180	5.0 *	6.0n#	3.0p	400n	1.1u	100f	AD	U	PD109
92	C30812	4	30n†	200	100m	225	10m	48	600m		900n	200	7.7m	10n#	3.0p	400n	1.1u	150f	AD	G ☑	PD109 Ø
93	PH302	4	30n	10	150m	32		48%	600m		940n	5.0	9 *	50n	14p	750n	1.0u	42f	XX	A	PD1031
94	PH302B	4	30n	10	150m	32		X8§	0.6		940n		9 *	50n#	14p	880n	1.0u		XX	A	PD1031
95	PH305	4	30n	10	150m	20		X8§	0.6		940n		5.3 *	50n#	11p	750n	1.0u		XX	A	PD1031
96	C30807	4	50n	45	10m	100	10m	48	600m		900n	45	1.2m	3.0n#	2.5p	400n	1.1u	100f	AD	B §	PD8d Ø
97	C30831	4	50n	45	1.0m	100		48	600m		900n	45	300u	3.0n#	2.0p	400n	1.1u	100f	AD	B §	PD8d Ø
98	E5106	4	100n			45			600m					10u					XX		None
99	FIL5C▾	4	100n	10		50		5C	.60 †		930n	10	5.0 *	10n#	16p	300n	1.1u	12p	AD		PD503
100	AP4075	4	125n	180		225	10m	58	600m$		900n	180	44 *	10n#	18p	400n	1.1u	100f	AD	A	TO-8
101	C30808	4	150n	45	100m	100	10m	48	600m		900n	45	7.7m	5.0n#	6.0p	400n	1.1u	150f	AD	E ☑	PD109 Ø
102	C30900E	4	150n	90		200	10m	48	600m†		900n	90	7.7m	6.0n#	5.0p	400n	1.1u	500f	AD	G ☑	PD109 Ø
103	C30822	4	250n	45	100m	100		48	600m		900n	45	31m	7.0n#	17p	400n	1.1u	200f	AD	K §	PD108 Ø
104	AP4100	4	300n	180		225	10m	58	600m$		900n	180	100 *	16n#	35p	400n	1.1u	400f	AD		PD303
105	C30809	4	350n	45	100m	100	10m	48	600m		900n	45	77m	10n#	35p	400n	1.1u	200f	AD	K §	PD108 Ø
106	C30810	4	1.5u	45	1.0m	100	10m	48	600m		900n	45	155m	12n#	70p	400n	1.1u	450f	AD		PD105 Ø
107	L4503	4	7.0T*	50		50	25m	X8	600m		900n	50	5.4m	500p§	5.5p	400n	1.1u		AD		PD272 Ø
108	L4504	4	7.0T*	90		90	25m	X8	600m		900n	90	5.4m	250p§	4.0p	400n	1.1u		AD		PD272 Ø
109	L4506	4	7.0T*	90		90	25m	X8	600m		900n	90	5.4m	250p§	10p	400n	1.1u		AD		PD273 Ø
110	L4509	4	7.0T*	25		25	25m	X8	600m		850n	25	5.4m	130p§	15p	500n	1.1u		AD		PD273 Ø

SYMBOLS AND CODES
EXPLAINED IN INTERPRETER

10. PHOTODIODES - PIN (Cont'd)

IN ORDER OF: (1)TYPE (2) RESPONSIVITY
(3) MAX DARK CURRENT & (4) TYPE NUMBER

LINE No.	4 TYPE NUMBER	1 TYPE	3 MAX DARK CURR @ 25°C ID (A)	VR TEST (V)	MAX RATINGS @ 25°C PD (W)	VR (V)	IF (A)	TEMP RNG. CODE - +	2 MINIMUM RESPONSIVITY Re (A/W)	SOUR-CE	λ (m)	VR (V)	ACTIVE AREA Sq In	RESP. TIME (s)	CAPAC C (F)	SPECTRAL RANGE LOW λL (m)	HIGH λH (m)	NOISE EQ.PWR Pn Watt/Hz1/2	M T L	LEAD CODE	DRAWING
1	SFH217(A)	4	10n	20	100m	30		48%	620m	C	850n	5.0	1.0 *	2.0n#	11p	400n	1.1u	290p	AD		PD Ø
2	SFH217F(A)	4	10n	20	100m	30		48%	620m	C	850n	5.0	1.0 *	2.0n#	11p	800n	1.1u	290p	AD		PD Ø
3	ASEC50	4	350m	30		50			.63		930m	30	50 *	14n	90p	350	1.1m	50p	AD	♦	PD199b
4	YAG444-2	4	60u	180		250			650m		900n		154m	8.0n	35p	350n	1.1u		AD	D	PD23a Ø
5	BP104	4	2.0n	10	150m	20		48%	710m		950n	5.0	7.8m	125n	48p	800n	1.1u	42f	AD	♦	PD278 ☑
6	5082-4205	4	150p	10	50m	50		5C	740m		770n		0.3 *	300n				16f	AD	J	PD5d
7	E5104	4	25n			50			800m					7.0u					XX		None
8	PN316N	4	10n	10	30m	30		28	1.2 †$	A	800n	10	0.8 *	20n#	5.0p	900n$			AD	♦	PD1076
9	E5108	4	100n			45			1.2					10u					XX		None
10	MRD721	4	10n	20	100m	200 †		4A§	5.0 $	E	800n	20		1.0n	3.0p	800n	800n		AD	B	PD1024
11	NDL2102	4	1.0n	10	100m	100	100m	6F	60 #		850n	10		1.0n#	1.5p	600n	1.1u		AD	Z	TO-18
12	NDL2104	4	1.0n	10	100m	100	100m	6F	60 #		850n	10		4.0n#	2.8p	600n	1.1u		AD	Z	TO-18
13	NDL2208	4	1.0n	10	100m	50	100m	6F	70 #		850n	10		10n#	1.5p	600n	1.1u		AD	Z	TO-18

PYROELECTRIC DETECTOR

17	P1-11H	5			500m			58	130n		632n		1.5m		3.0p	1.0n	1.0m		ED	♦	PD344a Ø
18	P1-12H	5			1.0			58	130n		632n		6.2m		12p	1.0n	1.0m		ED	♦	PD344a Ø
19	P1-13H	5			1.0			58	130n		632n		14m		27p	1.0n	1.0m		ED	♦	PD344a Ø
20	P1-15	5			50m			58	130n		632n		39m		75p	1.0n	1.0m		ED	♦	PD344 Ø
21	P1-15H	5			1.0			58	130n		632n		39m		75p	1.0n	1.0m		ED	♦	PD344a Ø
22	P1-12	5			50m			58	250n		632n		6.2m		24p	1.0n	1.0m		ED	♦	PD344 Ø
23	P1-13	5			50m			58	250n		632n		14m		54p	1.0n	1.0m		ED	♦	PD344 Ø
24	P1-11	5			50m			58	500n		632n		1.5m		15p	1.0n	1.0m		ED	♦	PD344 Ø
25	RPY109(A)	5						47	45 ☑			10	4.0 *			1.0u	15u	6.0n	XX	KK♦	PD1091 Ø
26	RPY102	5						47	50 ☑		10u	10	4.0 *			6.5u	14u	5.0n	XX	KK♦	PD1091 Ø
27	P2105(A)	5						27	60 ☑			10	4.0 *			1.0u	25u	1.4n	XX	KK♦	PD1091 Ø
28	BPF11	5	5.0n†	800m	100m	245	10m	09%	60 †		800n				1.3p						PD1079
29	RPY103	5						25	95 ☑		10u	10	2.0 *			6.5u	14u	15u	XX	KK♦	PD1091 Ø
30	RPY107	5						47	130 ☑			10	2.0 *			1.0u	15u	3.0n#	XX	KK♦	PD1091 Ø
31	RPY97	5						47	150 ☑		10u	3.0	2.0 *			6.5u	14u	2.5n	XX	KK	PD42ac Ø
32	RPY100	5						47	150 ☑		10u	3.0	2.0 *			6.5u	14u	2.5n	XX	KK	PD1091 Ø
33	RPY89	5				30		2A	250 †☑		6.0u	9.0	6.2m			1.0u	15u	2.5n	XX	KK	PD42n
34	RPY95	5						25	250 ☑		10u	10	2.0 *			6.5u	14u	2.1n	XX	KK	PD42aa
35	RPY88	5				30		2A	320 †☑		10u	9.0	6.2m			6.5u	14u	2.0n	XX	KK	PD42n
36	RPY94	5						25	425 ☑		10u	10	2.0 *			6.5u	14u	1.5n	XX	GBØ	PD42aa
37	RPY87	5				30		2A	500 †☑		6.0u	9.0	3.1m			1.0u	15u	1.7n	XX	KK	PD42n
38	L400-9	5	1.0G*					17	600 ☑				24m		30p				ED	♦	PD1148 Ø
39	L400-10	5	1.0G*					17	600 ☑				19m		30p				ED	♦	PD1148 Ø
40	L400-11	5	1.0G*					17	600 ☑				38m		30p				ED	♦	PD1148 Ø
41	L400-12	5	1.0G*					17	600 ☑				30m		30p				ED	♦	PD1148 Ø
42	L400-13	5	1.0G*					17	600 ☑				6.1m		30p				ED	♦	PD1148 Ø
43	L400-14	5	1.0G*					17	600 ☑				24m		30p				ED	♦	PD1148 Ø
44	L400-15	5	1.0G*					17	600 ☑				154m		30p				ED	♦	PD1148 Ø
45	L400-16	5	1.0G*					17	600 ☑						30p				ED	♦	PD1148 Ø
46	L400-17	5	1.0G*					17	600 ☑						30p				ED	♦	PD1148 Ø
47	L400-18	5	1.0G*					17	600 ☑						30p				ED	♦	PD1148 Ø
48	L400-5	5	1.5G*					17	600 ☑				6.1m		30p				ED	♦	PD1148 Ø
49	L400-6	5	1.5G*					17	600 ☑				4.8m		30p				ED	♦	PD1148 Ø
50	L400-7	5	1.5G*					17	600 ☑				14m		30p				ED	♦	PD1148 Ø
51	L400-8	5	1.5G*					17	600 ☑				11m		30p				ED	♦	PD1148 Ø
52	L400-1	5	2.0G*					17	600 ☑				387u		30p				ED	♦	PD1148 Ø
53	L400-2	5	2.0G*					17	600 ☑				304u		30p				ED	♦	PD1148 Ø
54	L400-3	5	2.0G*					17	600 ☑				1.5m		30p				ED	♦	PD1148 Ø
55	L400-4	5	2.0G*					17	600 ☑				1.2m		30p				ED	♦	PD1148 Ø
56	RPY86	5				30		2A	640 †☑		10u	9.0	3.1m			6.5u	14u	1.3n	XX	KK	PD42n
57	P2105(1A)	5						27	900 ☑	L			6.2m			1.0u	25u	1.4n	XX		PD1173
58	T300-9	5	2.0G*					14	2.4k☑				24m		25p	2.0u	20u		XX	♦	PD1148 Ø
59	T300-10	5	2.0G*					14	2.4k☑				19m		25p	2.0u	20u		XX	♦	PD1148 Ø
60	T300-11	5	2.0G*					14	2.4k☑				38m		25p	2.0u	20u		XX	♦	PD1148 Ø
61	T300-12	5	2.0G*					14	2.4k☑				30m		25p	2.0u	20u		XX	♦	PD1148 Ø
62	T300-13	5	2.0G*					14	2.4k☑				6.1m		25p	2.0u	20u		XX	♦	PD1148 Ø
63	T300-14	5	2.0G*					14	2.4k☑				24m		25p	2.0u	20u		XX	♦	PD1148 Ø
64	T300-5	5	3.0G*					14	2.4k☑				6.1m		25p	2.0u	20u		XX	♦	PD1148 Ø
65	T300-6	5	3.0G*					14	2.4k☑				4.8m		25p	2.0u	20u		XX	♦	PD1148 Ø
66	T300-7	5	3.0G*					14	2.4k☑				14m		25p	2.0u	20u		XX	♦	PD1148 Ø
67	T300-8	5	3.0G*					14	2.4k☑				11m		25p	2.0u	20u		XX	♦	PD1148 Ø
68	T300-1	5	4.0G*					14	2.4k☑				387u		25p	2.0u	20u		XX	♦	PD1148 Ø
69	T300-2	5	4.0G*					14	2.4k☑				304u		25p	2.0u	20u		XX	♦	PD1148 Ø
70	T300-3	5	4.0G*					14	2.4k☑				1.5m		25p	2.0u	20u		XX	♦	PD1148 Ø
71	T300-4	5	4.0G*					14	2.4k☑				1.2m		25p	2.0u	20u		XX	♦	PD1148 Ø
72	P1601(A)	5						25	5.0k☑				4.0 *			1.0u	15u	500p	AB	GBØ	TO-5
73	P1603(A)	5						25	5.0k☑				4.0 *			1.0u	70u	500p	XX	GBØ	TO-5
74	P1604(A)	5						25	5.0k☑				4.0 *			1.0u	9.0u	500p	XX	GBØ	TO-5

PHOTODIODE, GENERAL-PURPOSE

78	BPX61	4	30n	10	325m	32	100m	4C♦	70n§	C		10	6.7m*	25n#	40p	400n	1.1u		AD	A ♦	PD14a Ø
79	BPW80	6			250m			A §			900n		0.7 *	0.5u		900n			XX	♦	PD42S Ø
80	BPW81	6			250m			A §			900n		0.7 *	0.5u		900n			XX	♦	PD42S Ø
81	SP1	6									900n		3.2 *			420n	1.1u		AD		CH *
82	SP2	6									900n		2.8 *			420n	1.1u		AD		CH *
83	SP3	6									900n		7.2 *			420n	1.1u		AD		CH *
84	SP4	6									900n		16 *			420n	1.1u		AD		CH *
85	SP5(2)	6									900n		20 *			420n	1.1u		AD		CH *
86	SP10(2)	6									900n		92 *			420n	1.1u		AD		CH *
87	SP15(2)	6									900n		4.5 *			420n	1.1u		AD		CH *
88	SP17	6									900n		5.4 *			420n	1.1u		AD		CH *
89	SP19	6									900n		3.5 *			420n	1.1u		AD		CH *
90	SP26	6									900n		11 *			420n	1.1u		AD		CH *
91	SP27	6									900n		10 *			420n	1.1u		AD		CH *
92	SP29	6									900n		7.4 *			420n	1.1u		AD		CH *
93	SP30(2)	6									900n		23 *			420n	1.1u		AD		CH *
94	SP45	6									900n		16 *			420n	1.1u		AD		CH *
95	SP55	6									900n		20 *			420n	1.1u		AD		CH *
96	SP60	6									900n		61 *			420n	1.1u		AD		CH *
97	SP113	6									900n		197 *			420n	1.1u		AD		CH *
98	SP254	6									900n		5.9 *			420n	1.1u		AD		CH *
99	SP257F	6						27		C	900n					450n	1.0u		AD	A	PD262o
100	SP550	6									900n		15 *			420n	1.1u		AD		CH *
101	SP651	6									900n		50 *			420n	1.1u		AD		CH *
102	SP652	6									900n		103 *			420n	1.1u		AD		CH *
103	SP-SKL	6						2A		C	880n					500n	1.0u		AD	B	PD25h
104	SP-SKLT	6						2A		C	880n					500n	1.0u		AD	A	PD609
105	GPD1511	6	2.0p	2.0		10		16						250u		400n	720n		AD		PD265f
106	GPD1511C325	6	2.0p	2.0				16						250u		400n	720n		AD		PD1097
107	GPD1812	6	5.0p	2.0				16						250u		400n	720n		AD		PD265f
108	BS100C	6	10p	1.0		10		26							500p	500n	600n		AD	A	PD265d
109	BS500B	6	10p	1.0				26					5.3 *			350n	700n		AD		PD468
110	BS100D	6	100p	1.0		10		16							500p	880n$			AD	A	PD265e

SYMBOLS AND CODES
EXPLAINED IN INTERPRETER

10. PHOTODIODES - General-Purpose (Cont'd)

IN ORDER OF: (1)TYPE (2) RESPONSIVITY (3) MAX DARK CURRENT & (4) TYPE NUMBER

LINE No.	4 TYPE NUMBER	1 TYPE	3 MAX DARK CURR @ 25°C ID (A)	VR TEST (V)	MAX RATINGS @ 25°C PD (W)	VR (V)	IF (A)	TEMP RNG. CODE - +	2 MINIMUM RESPONSIVITY Re (A/W)	SOUR-CE	λ (m)	VR (V)	ACTIVE AREA Sq In	RESP. TIME (s)	CAPAC C (F)	SPECTRAL RANGE LOW λL (m)	HIGH λH (m)	NOISE EQ.PWR Pn Watt/Hz1/2	MTL	LEAD CODE	DRAWING
1	BS500A	6	2.0n	2.0				16					5.3 *			350n	1.1u		AD		PD256
2	FPD08R32WX	6	3.0n	900m		180	100m	4A							2.0p				XX		PD959
3	11PS18M	6	10n	10		150							1.0 *	35n#	20p			800p	XX		PD169k
4	CLCD637	6	10n	100m									494m*	5.0u#	35p#				XX		PD1418
5	CLCD765	6	10n	100m									145m*	4.0u#	7.0p#				XX		PD1417
6	MP22C	6	15n	1.0	50u	30		07						2.0u		400n	1.2u		AD		PD1093
7	STD2050-1	6	20n	20		75		6C						5.0u#					AD	M	PD96 Ø
8	STD2050-2	6	20n	20		30		6C						50u#		370n	1.2u		AD	M	PD96 Ø
9	STDD210	6	20n	20		40		6C						50u#		370n	1.2u		AD		PD209
10	22PS18M	6	25n	10		100							2.6 *	35n#	40p			10p	XX		PD169k
11	CLCD621	6	25n	100m									16m	10u#	200p#				XX		PD1420
12	CLCD641	6	25n	100m									27m	15u#	280p#				XX		PD1421
13	CLCD798	6	25n	100m									7.4m	8.0u#	85p				XX		PD1419
14	MP44H	6	30n	1.0	200u	30		07						5.0u		400n	1.2u		AD		PD1094
15	OP903	6	30n	10		33				E				600n#					NAD	A §	PD7t Ø
16	33PS05M	6	50n	10		75							5.6 *	40n#	80p			20p	XX		PD169m
17	CLD41	6	50n	100m				F §					1.7 *		40p	860n$			AD		PV142
18	CLD42	6	50n	100m				F §					1.7 *		40p	860n$			AD		PV142d
19	MI33HF	6	50n	10	200m	32		27						300n		800n	1.2u		AD		PD14
20	MI33HLF	6	50n	10	200m	32		27						300n	25p	780n	1.2u		AD		PD1095
21	MI33R	6	50n	10	150m	35		27						300n	25p	780n	1.2u		AD		PD1096
22	MI33RF	6	50n	10	150m	35		27						300n	25p	650n	1.2u		AD		PD1096
23	MP55	6	50n	1.0	300u	30		07						8.0u		400n	1.2u		AD		PD1092
24	CLD31	6	100n	100m				F §					17 *		400p	860n$			AD		PV141
25	CLD56	6	100n	100m				F §					17 *		350p	860n$			AD		PV136
26	CLD71	6	100n	100m				F §					10 *	12u#	200p	860n$			AD		PV174
27	CLD72	6	100n	100m				F §					1.7 *	5.0u#	50p	860n$			AD		PV174
28	68PD08M	6	126n	1.0		5.0							50 *	700n#	3.9n			80p	AD		PD165e
29	44PS05M	6	200n	10		50							18 *	60n#	250p			50p	XX		PD169m
30	68PS08M	6	500n	1.0		25							50 *	80n#	800p			70p	XX		PD165e
31	110PS9M	6	1.0u	1.0		10							86 *	100n#	1.5n			90p	XX		PD165f
32	BPX98	6	1.0u	1.0		1.0	10m	6C%							800p	800n$			AD	A	PD312a
33	FPD13R12JT	6	1.0u	900m		40	100m								3.0p				XX		PD1044
34	HP2ML	6	1.0u	5.0				28		C	900n					450n	1.0u		AD	A	PD12g
35	FPD13R12SR	6	2.0u	900m		40	100m	47							3.0p				XX		PD1042
36	MM53	6	5.0u†	1.0	0.2			27						10u					AD		PD1098
37	MM53C	6	5.0u†	1.0	0.2			27						10u					AD		PD1099
38	MM2010	6	70u†	1.0	2.0			27						100u					AD		PD1098a
39	PN308	6	10n	10	100m	50		2C	5.0n$	A	900n	10		3.0u*	14p	900n$			AD	B	PD915
40	SP7L	6	50n†	10		50		28	5n†§	C	830n		490m*	10n	40p	450n	1.0u		AD	A	None
41	BPX63	6	39T*	1.0	200m	7.0	100m	48%	8.0n§	C		5.0	970m*	1.3u#	100p	350n	1.1u	2.5f	AD	A ♦	PD12p Ø
42	SP12FS	6	1.0	10			13	28	13n†§	C			1.5 *		830p	450n	1.0u		AD	A	None
43	SFH200	6	40p	1.0	100m	1.0	20u	58%	14n§	C		5.0	2.0m*	1.5u#	180p	400n	1.0u		AD	A	PD278a ☑
44	SP1ML	6	100n	5.0		50		29	15n†§	C	830n		1.4 *	10n	50p	450n	1.0u		AD	A §	PD12g Ø
45	SP1CL3	6	50	10			10	29	15n†§	C			1.4 *		40p	450n	1.0u		AD	A	None
46	BPX90	6	200n	10	100m	32		48%	25n§	C		5.0	5.0 *	1.3u	430p	400	1.1u		AD	A	PD144g ☑
47	SP2ML	6	1.0u†	10		30		28	25n†§	C	830n		4.8 *	200n	230p	450n	1.0u		AD	A §	PD12g Ø
48	SP1KL	6	100n	5.0		100		2C	35n†§	C	830n		1.4 *	10n	50p	450n	1.0u		AD	A §	PD7f Ø
49	BS112	6	100n	1.0		5.0		16	55n§	B			19m	20u		350n	1.1u		AD	A	PD266 Ø
50	BPX61P	6	1n	10	325m	70	100m	4C♦	70n§	C		10	6.7 *	15n#	40p	400n	1.1u		AD	A ♦	PD14a Ø
51	SP3ML	6	1.0u†	10		30		28	75n†§	C	830n		10 *	800p	600p	450n	1.0u		AD	A §	PD12g Ø
52	SP45ML	6	10u	5.0		20		29	170n†§	C	830n		20 *	2.0u	1.0n	450n	1.0u		AD	A §	PD12g Ø
53	BS142	6	100n	1.0		5.0		16	180n§	B			64m	27u		350n	1.1u		AD	A	PD266a Ø
54	SP8ML	6	5.0u†	10		20		2A	330n†§	C	830n		54 *	10u	3.9n	450n	1.0u		AD	A §	None
55	BS530UV	6	50n	1.0		5.0		16	350n§	B			125m	30u		200n	1.1u		AD	A	PD264 Ø
56	SP8K	6	5.0u†	10		20		2A	350n†§	C	830n		54 *	10u	3.9n	450n	1.0u		AD	A §	None
57	SD2420-002	6	5.0n	20	125m	50		5C	550n†	A	850n	5.0		50n#		590n	1.0u		AD	B ♦	PD25a Ø
58	OPC60Y	6	100u	2.0	50m	100	1.0	6F	10u	E	830n	5.0				400n	1.2u		AD		PD1028 *
59	OPC903	6	25n	10	150m	33	10m	6F	40u	E	830n	5.0			150p	400n	1.2u		AD		PD1030 *
60	OPC913	6	25n	10	150m	33	10m	6F	40u	E	830n	5.0			30p	400n	1.2u		AD		PD1030 *
61	L4412	6	.50u	15		20	25m	X8	75u†	H		10	5m	75n#		420n	1.1u		AD		PD275 Ø
62	STD1840-1	6	20n	20		30		6C	120u$	E				50u#		370n	1.2u		AD	M	PD95 Ø
63	STD1840-2	6	5.0n	20		50		6C	140u$	E				50u#		370n	1.2u		AD	M	PD95 Ø
64	STD1710-1	6	20n	20		30		6C	200u$	E				50u#		370n	1.2u		AD	B	PD25a Ø
65	STD1710-2	6	5.0n	20		50		6C	350u$	E				50u#		370n	1.2u		AD	B	PD25a Ø
66	OP900	6	10n	10	50m	100		6C	400u$	E		50		600n#		400n	1.1u		AD	A	PD25f Ø
67	STD1540-1	6	20n	20		30		6C	600u$	E				50u#		370n	1.2u		AD	B	PD93 Ø
68	SD1420-002L	6	5.0n	20	60m	50		5C	1.0m$	E		20		50n#		640n	1.0u		AD	A ♦	PD93 Ø
69	STD1540-2	6	5.0n	20		50		6C	1.0m$	E				50u#		370n	1.2u		AD	B	PD93 Ø
70	STD2040-2	6	5.0n	20		50		6C	2.0m$	E				50u#		370n	1.2u		AD	M	PD96 Ø
71	STD1850-2	6	20n	20		75		6C	2.0m$	E				5.0u#					AD	M	PD95 Ø
72	STD1860-2	6	20n	20		30		6C	2.0m$	E				50u#		370n	1.2u		AD	M	PD95 Ø
73	STD2040-1	6	20n	20		30		6C	2.0m$	E				50u#		370n	1.2u		AD	M	PD96 Ø
74	OP903W	6	30n	10		33			7.0m$	E			83m§	200n#	270p				NAD	A §	PD14d
75	8245	6							70m		200n		15m	18u#		200n	1.1u	120f	XX		None
76	VTB5050UV	6	3.5n	2.0		5.0		6C	100m		222n		23m	10u	3.0n	200n	1.1u		AD	A	PD14e
77	VTB6060UV	6	5.0n	2.0		5.0		6C	100m		222n		60m	10u	8.0n	200n	1.1u		AD	A	PD165d
78	VTB9416B	6	2.0p	2.0		10			125m	B	400n		2.0m		600p	300n	800n		AD		None
79	VTB9415B	6	4.0p	2.0		10			125m	B	400n		2.0m		600p	300n	800n		AD		None
80	VTB9414B	6	10p	2.0		10			125m	B	400n		2.0m		600p	300n	800n		AD		None
81	VTB1013	6	20p	2.0		10		2A	125m†	C	400n		2.0m		420p	300n	1.1u		AD		PD8k Ø
82	VTB1013B	6	20p	2.0		10		2A	125m†	C	400n		2.0m		420p	300n	800n		AD		PD8k Ø
83	VTB1113	6	20p	2.0		10		2A	125m†	C	400n		2.0m		420p	300n	1.1u		AD		PD7h Ø
84	VTB1113B	6	20p	2.0		10		2A	125m†	C	400n		2.0m		420p	300n	800n		AD		PD7h Ø
85	VTB9413	6	20p	2.0		10		2A	125m†	C	400n		2.0m		420p	300n	1.1u		AD		PD265c
86	VTB9413B	6	20p	2.0		10		2A	125m†	C	400n		2.0m		420p	300n	800n		AD		PD265c
87	VTB5041	6	50p	2.0		10		2A	125m†	C	400n		8.0m		1.6n	300n	1.1u		AD		PD8j Ø
88	VTB5041B	6	50p	2.0		10		2A	125m†	C	400n		8.0m		1.6n	300n	800n		AD		PD8j Ø
89	VTB5051	6	250p	2.0		10			125m†	C	400n		23m		4.6n	300n	1.1u		AD		PD8j Ø
90	VTB5051B	6	250p	2.0		10			125m†	C	400n		23m		4.6n	300n	800n		AD		PD8j Ø
91	VTB1012	6	500p	2.0		10		2A	125m†	C	400n		2.0m		420p	300n	1.1u		AD		PD8k Ø
92	VTB1012B	6	500p	2.0		10		2A	125m†	C	400n		2.0m		420p	300n	800n		AD		PD8k Ø
93	VTB1112	6	500p	2.0		10		2A	125m†	C	400n		2.0m		420p	300n	1.1u		AD		PD7h Ø
94	VTB1112B	6	500p	2.0		10		2A	125m†	C	400n		2.0m		420p	300n	800n		AD		PD7h Ø
95	VTB9412	6	500p	2.0		10		2A	125m†	C	400n		2.0m		420p	300n	1.1u		AD		PD265c
96	VTB9412B	6	500p	2.0		10		2A	125m†	C	400n		2.0m		420p	300n	800n		AD		PD265c
97	VTB5040	6	2.0n	2.0		10		2A	125m†	C	400n		8.0m		1.6n	300n	1.1u		AD		PD8j Ø
98	VTB5040B	6	2.0n	2.0		10		2A	125m†	C	400n		8.0m		1.6n	300n	800n		AD		PD8j Ø
99	VTB6061	6	2.0n	2.0		10			125m	C	400n		64m		13n	300n	1.1u		AD		PD165d Ø
100	VTB6061B	6	2.0n	2.0		10			125m	C	400n		64m		13n	300n	800n		AD		PD165d Ø
101	VTB5050	6	3.5n	2.0		10			125m†	C	400n		23m		4.6n	300n	1.1u		AD		PD8j Ø
102	VTB5050B	6	3.5n	2.0		10			125m†	C	400n		23m		4.6n	300n	800n		AD		PD8j Ø
103	VTB6060	6	5.0n	2.0		10			125m	C	400n		64m		13n	300n	1.1u		AD		PD165d Ø
104	VTB6060B	6	5.0n	2.0		10			125m	C	400n		64m		13n	300n	800n		AD		PD165d Ø
105	DF275	6							180m		633n		21 *		630p	250	300	10	AD	V	TO-5
106	DF350	6							180m		633n		21 *		630p	300	400	10	AD	V	TO-5
107	DF750	6							180m		633n		21 *		630p	400	1.1k	10	AD	V	TO-5
108	SD444-33-22-253																				
		6	100n	1.0				2 ♦	.20 †		555n		10 *	200n	1.6n				XX		PV169a

SYMBOLS AND CODES EXPLAINED IN INTERPRETER

IN ORDER OF: (1)TYPE (2) RESPONSIVITY
(3) MAX DARK CURRENT & (4) TYPE NUMBER

LINE No.	4 TYPE NUMBER	1 TYPE	3 MAX DARK CURR @ 25°C ID (A)	VR TEST (V)	MAX RATINGS @ 25°C PD (W)	VR (V)	IF (A)	TEMP RNG. CODE - +	2 MINIMUM RESPONSIVITY Re (A/W)	SOUR-CE	λ (m)	VR (V)	ACTIVE AREA Sq In	RESP. TIME (s)	CAPAC C (F)	SPECTRAL RANGE LOW λL (m)	HIGH λH (m)	NOISE EQ.PWR Pn Watt/Hz1/2	MT	LEAD CODE	DRAWING
1	SD44432-12-253																				
		6	100n	1.0					.21		555n		.03	1.0u	10n				XX	Z	PV169a
2	SD44432-22-173																				
		6	100n	1.0					.21		555n		.03	200n	1.6n				XX		PV170a
3	BPW21	6	2.0n	5.0	250m	10		48%	220m	C	550n	5.0	2.7 *	1.5u#	580p	350n	775n		AD	A	PD8y Ø
4	PD7002	6	300n	15			2.0m	37Ø	0.3		1.3u	15	70m*		10p	1.0u	1.6u		CJ		PD517
5	C30979E	6	80n			60			.37		1.3u	5.0	.8m*	1.0n#	1.0p	900n	1.6u	.30p*	CJ	A	TO-18
6	OSD1-2	6	5.0n†	30		60	10m	27	380m†		630n		1.0 *	10n#		630n	900n	70f	AD		PD14h
7	OSD5-2	6	30n†	30		60	10m	27	380m†		630n		5.0 *	10n#		630n	900n	170f	AD		PD109e Ø
8	OSD50-2	6	350n†	30		60			380m†		630n		50 *	10n#		630n	900n	570f	AD	♦	PD199b Ø
9	OSD100-2	6	800n†	30		60	10m	27	380m†		630n		100 *	10n#		630n	900n	870f	AD	♦	PD201b Ø
10	PN1	6	2.0n	10			100m	5C	400m				.85 *	3.0n#	7.0p	633n	900n	50f	AD	A §	TO-18
11	PN3	6	5.0n	10			100m	5C	400m				3.3 *	4.0n#	20p	633n	900n	70f	AD	A §	TO-18
12	PN5	6	10n	10			100m	5C	400m				5.1 *	5.0n#	30p	633n	900n	100f	AD	A §	TO-5
13	PN20	6	25n	10			100m	5C	400m				18 *	7.0n#	120p	633n	900n	200f	AD	A §	TO-8
14	PN100B	6	100n	10			100m	5C	400m				100 *	30n#	600p	633n	900n	300f	AD	B §	PA56
15	PN100P	6	100n	10			100m	5C	400m				100 *	30n#	600p	633n	900n	300f	AD	M Ø	PA57
16	PS100-10(1)	6	1.0u	10		100			450m		905n		46m	2.0u#	20p	400n	1.1u	1.8p	AD		PD307 Ø
17	PS100-30	6	3.0u	10		100			450m		905n		186m	14u#	60p	400n	1.1u	2.3p	AD		PD308 Ø
18	PS100-50	6	5.0u	10		100			450m		905n		310m	20u#	50p	400n	1.1u	2.9p	AD		PD308a Ø
19	BPW33	6	20p	1.0	150m	7.0	100m	48%	470m	C	800n	1.0	11m	1.5u	630p	450n	1.1u	5.3f	AD	A	PD144d Ø
20	BPW32	6	37p	10	100m	7.0	100m	58%	470m	C	800n	1.0	1.5m	1.3u#	100p	350n	1.1u	2.1f	AD	A	PD144e Ø
21	BPX91B	6	300n	10	150m	10		48%	470m	C	850n	10	7.3 *	1.6u	580p	320n	1.1u		AD	♦	PD144d Ø
22	8045	6							500m		900n		15m	18u#				17f	XX		None
23	BPX94	6	200p	1.0	300m	18		F §	500m	G	800m	0	2.3m		200p	780n$			AD	A Ø	TO-18
24	VTP5041	6	3.0n	50		200			500m		925n		8.0m		15p	300n	1.1u		AD		TO-5
25	NSL811	6	5.0n	5.0		40		6C	500m		900n		4.8 *		50p	400n	1.1u		AD	F	TO-18
26	NSL812	6	5.0n	5.0		40		6C	500m		900n		4.8 *		50p	400n	1.1u		AD	F	TO-18
27	NSL813	6	5.0n	5.0		40		6C	500m		900n		4.8 *		50p	400n	1.1u		AD	F	TO-18
28	NSL814	6	5.0n	5.0		40		6C	500m		900n		4.8 *		50p	400n	1.1u		AD	F	TO-52
29	NSL815	6	5.0n	5.0		40		6C	500m		900n		4.8 *		50p	400n	1.1u		AD	F	TO-52
30	22PB18M	6	10n	10		25			500m	F	885n		2.6 *	45n#	260p	300n	1.2u	80f	AD		PD169k
31	NSL883	6	10n	5.0		20		6C	500m		900n		16 *		180p	400n	1.1u		AD	F	TO-5
32	11PH18M▼	6	12n	10		150			500m	F	925n		1.0 *	50n#	20p	400n	1.2u	80f	AD		PD169k
33	11PD18M	6	15n	10		100			500m	F	925n		1.0 *	50n#	120p	400n	1.2u	50f	AD		PD169k
34	33PB05M	6	15n	1.0		15			500m	F	885n		5.6 *	75n#	550p	300n	1.2u	100f	AD		PD169m
35	VTP5040	6	15n	50		200			500m		925n		8.0m		15p	300n	1.1u		AD		TO-5
36	003PV-TO18	6	20n	10		100			500m	C	900n		4.6m	9.0n#	10p	350n	1.1u	400f	AD	A Ø	PV142e
37	NSL893	6	20n	5.0		10		6C	500m		900n		34 *		380p	400n	1.1u		AD	F	TO-8
38	22BH18M	6	35n	10		100			500m	F	885n		2.6 *	60n#	40p	300n	1.2u	100f	AD		PD169k
39	22PH18M▼	6	35n	10		100			500m	F	925n		2.6 *	60n#	40p	400n	1.2u	100f	AD		PD169k
40	22PD18M	6	40n	10		50			500m	F	925n		2.6 *	60n#	260p	400n	1.2u	80f	AD		PD169k
41	33BH05M	6	50n	1.0		50			500m	F	885n		5.6 *	70n#	80p	300n	1.2u	200f	AD		PD169m
42	33PH05M▼	6	50n	1.0		50			500m	F	925n		5.6 *	70n#	80p	400n	1.2u	200f	AD		PD169m
43	BPX93	6	50n	10	75m	32		58%	500m	C	850n	10	1.5m	800n	120p	400n	1.1u		AD		PD144e Ø
44	33PD05M	6	55n	1.0		20			500m	F	925n		5.6 *	85n#	550p	400n	1.2u	100f	AD		PD169m
45	010PV-TO5	6	70n	10		100			500m	C	900n		15m	12n#	37p	350n	1.1u	700f	AD	A	PD302 Ø
46	44PB05M	6	80n	1.0		10			500m	F	885n		18 *	250n#	1.9n	300n	1.2u	300f	AD		PD169m
47	BPX92	6	100n	10	50m	32		48%	500m	C	850n	10	1.0 *	1.2n#	90p	400n	1.1u		AD	♦	PD144f Ø
48	44BH05M	6	200n	1.0		20			500m	F	885n		18 *	85n#	250p	300n	1.2u	500f	AD		PD169m
49	44PH05M▼	6	200n	1.0		20			500m	F	925n		18 *	85n#	250p	400n	1.2u	500f	AD		PD169m
50	68PB08M	6	200n	1.0		5.0			500m	F	885n		50 *	700n#	5.2n	300n	1.2u	600f	AD		PD165e
51	44PD05M	6	300n	1.0		10			500m	F	925n		18 *	250n#	1.9n	400n	1.2u	300f	AD		PD169m
52	BPX60	6	300n	10	325m	32	100m	4C§	500m	C	850n	10	7.3 *	3.0u#	580p	400n	1.1u		AD	A ♦	PD14a Ø
53	110PBM	6	360n	1.0		5.0			500m	F	885n		86 *	1.5u#	9.5n	300n	1.2u	800f	AD		PD165f
54	050PV-RM	6	370n	10		100			500m	C	900n		77m	30n#	185p	350n	1.1u	1.7p	AD	A	PD301a Ø
55	68PH08M▼	6	650n	1.0		10			500m	F	925n		50 *	150n#	800p	400n	1.2u	700f	AD		PD165e
56	100PV-BNC	6	750n	10		100			500m	C	900n		155m	50n#	375p	350n	1.1u	2.5p	AD	A	PD300 Ø
57	100PV-PP	6	750n	10		100			500m	C	900n		155m	50n	375p	350n	1.1u	2.5p	AD	A	PD303 Ø
58	100PV-RM	6	750n	10		100			500m	C	900n		155m	50n	375p	350n	1.1u	2.5p	AD	A	PD301 Ø
59	30X5PV-CM	6	1.1u	10		100			500m	C	900n		232m	70n#	550p	350n	1.1u	3.0p	AD	A	PD298
60	110PH9M▼	6	1.2u	10		5.0			500m	F	925n		86 *	250n#	1.5	400n	1.2u	900f	AD		PD165f
61	200PV-BNC	6	1.4u	10		100			500m	C	900n		310m	90n#	720p	350n	1.1u	3.3p	AD	A	PD300a Ø
62	200PV-PP	6	1.4u	10		100			500m	C	900n		310m	90n#	720p	350n	1.1u	3.3p	AD	A	PD303 Ø
63	200PV-RM	6	1.4u	10		100			500m	C	900n		310m	90n#	720p	350n	1.1u	3.3p	AD	A	PD301a Ø
64	110PD9M	6	1.5u	1.0		5.0			500m	F	925n		86 *	1.5u#	9.5n	400n	1.2u	800f	AD		PD165f
65	30X10PV-CM	6	2.2u	10		100			500m	C	900n		465m	135n#	1.1n	350n	1.1u	4.2p	AD		PD298a
66	400PV-RM	6	3.0u	10		100			500m	C	900n		620m	180n#	1.5n	350n	1.1u	4.9p	AD	A	PD301b Ø
67	45X11PV-CM	6	3.6u	10		100			500m	C	900n		784m	215n#	1.8n	350n	1.1u	5.8p	AD		PD298b
68	600PV-RM	6	4.2u	10		100			500m	C	900n		930m	250n#	2.1n	350n	1.1u	6.0p	AD	A	PD301c Ø
69	E7468	6	5.0u	10		15		58	500m				.25 *	1.0n	5.0p	400n	20u	5.0p	GE		None Ø
70	800PV-RM	6	5.4u	10		100			500m	C	900n		1.2	325n#	2.7n	350n	1.1u	6.5p	AD	A	PD301d Ø
71	OSD1-0	6	5.0n†	30		30	10m	27	520m†		900n		1.0 *	15n#	5.0p	430n	900n	70f	AD		PD14h
72	OSD5-0	6	30n†	30		30	10m	27	520m†		900n		5.0 *	15n#	10p	430n	900n	170f	AD		PD109e Ø
73	OSD50-0	6	350n†	30		30			520m†		900n		50 *	15n#	80p	430n	900n	570f	AD	♦	PD199b Ø
74	OSD100-0	6	800n†	30		30			520m†		900n		100 *	15n#	150p	430n	900n	870f	AD	♦	PD201b Ø
75	SD1420-002	6	5.0n	20	60m	50		5C	550m†	A	850n	5.0		50n#		590n	1.0u		AD	A Ø	PD93a Ø
76	K7150	6	10n	20	200m	30	100m	58	.55 †	E				50n#		400n	1.1u		AD	AB	PT6 Ø
77	K7100	6	20n	20	200m	30	100m	58	.55 †	E				50n#		400n	1.1u		AD	AB	PD567 Ø
78	SD3421-002	6	20n	20	150m	75		5C	550m†	A	850n	5.0		5.0n#		590n	1.0u		AD	AD♦	PD95 Ø
79	SD5421-002	6	20n	20	150m	75		5C	550m†	A	850n	5.0		5.0n#		590n	1.0u		AD	AD♦	PD96 Ø
80	K7200	6	30n	20	200m	30	100m	58	.55 †	E				50n#		400n	1.1u		AD	AB	PT2ac
81	K7250	6	30n	20	200m	30	100m	58	.55 †	E				50n#		400n	1.1u		AD	AB	PD27 Ø
82	E7462	6	6.0u	6.0		10		58	550m				1.0 *	30n	65p	400n	20u	5.0p	GE		TO-18
83	E7464	6	50u	5.0		10		58	550m				3.0 *	150n	400p	400n	20u	7.0p	GE		TO-5
84	E7466	6	300u	2.0		10		58	550m				10m	3.0u	3.6f	400n	20u	5.0p	GE		None Ø
85	C30849	6							600m		900n		300u	1.0u	10p	400n	1.1u	35f	AD	B §	PD8d Ø
86	C30850	6							600m		900n		1.2m	1.0u	20p	400n	1.1u	50f	AD	B §	PD8d Ø
87	C30851	6							600m		900n		7.7m	1.0u#	80p	400n	1.1u	80f	AD	F Ø	PD109 Ø
88	C30852	6							600m		900n		31m	1.0u#	250p	400n	1.1u	130f	AD	K §	PD108 Ø
89	C30853	6							600m		900n		77m	1.0u#	500p	400n	1.1u	170f	AD	K §	PD108 Ø
90	C30854	6							600m		900n		155m	1.0u#	1.0n	400n	1.1u	250f	AD		PD105 Ø
91	PD7005	6	1.0n	10			2.0m	37Ø	0.6		1.3u	15	5.0m*		1.0p	1.0u	1.6u		CJ		PD517
92	PD7935	6	1.0n	10			2.0m	37Ø	0.6		1.3u	15	5.0m*		1.0p	1.0u	1.6u		CJ		PD1042
93	PD7006	6	3.0n	10			2.0m	37Ø	0.6		1.3u	15	70m*		10p	1.0u	1.6u		CJ		PD517
94	PD7936	6	3.0n	10			2.0m	37Ø	0.6		1.3u	15	70m*		10p	1.0u	1.6u		CJ		PD1042
95	PD7003	6	100n	15			2.0m	37Ø	0.6		1.3u	15	8.0m*		3.0p	1.0u	1.6u		CJ		PD517
96	C30980EL	6	250n			60	500m	47	.60		1.3u			1.0n	8p	900n	1.7p		BC		TO-18
97	PD7004	6	300n	15			2.0m	37Ø	0.6		1.3u	15	70m*		10p	1.0u	1.6u		CJ		PD517
98	CG4100	6	500n	10	50m	25	5.0m	17	0.6		1.3u	10	70u§	1.0n	1.4p	1.0u	1.6u		AB		None
99	CG4000	6	1.2u	10	50m	25	5.0m	17	0.6		1.3u	10	100u§	1.0n	3.0p	1.0u	1.6u		AB		None
100	CG4200	6	2.5u	10	50m	25	5.0m	17	0.6		1.3u	10	200u§	1.5n	9.0p	1.0u	1.6u		AB		None
101	FND100	6	100n	90		125		57	620m		900n		7.9m	1.0n#	8.5p	300n	1.1u	290f	AD	A	PD22d Ø
102	C30948E	6	200n			370	500m	47	.62		900n		.5	1.0n	6p	400	1.1p		AD		TO-18
103	MD33(1)	6	120n	120					660m		905n		201m	5.0n#	6.0p	360n	1.2u	20p	XX		PD161d
104	TD31	6	120n	120					.66		905n		31m		3p	360n	1.2u		XX		PD161d
105	E7460	6	6.0p†			25			700m		1.2u		.80 *	150n		400n	2.0u	7.0p*	AB		TO-5
106	C30980E	6	250n			60	500m	47	.73		1.3u		.2	1.0n	8p	900n	1.7p		BC		TO-18
107	11PD18P	6	15n	10		100			1.0	F	925n		1.0 *	50n#	120p	400n	1.2u	50f	AD		PD411 Ø
108	22BH18P	6	35n	10		100			1.0	F	925n		2.6 *	60n#	40p	300n	1.2u	100f	AD		PD411 Ø

SYMBOLS AND CODES
EXPLAINED IN INTERPRETER

10. PHOTODIODES - General-Purpose (Cont'd)

IN ORDER OF: (1)TYPE (2) RESPONSIVITY
(3) MAX DARK CURRENT & (4) TYPE NUMBER

LINE No.	4 TYPE NUMBER	1 TYPE	3 MAX DARK CURR @ 25°C ID (A)	VR TEST (V)	MAX RATINGS @ 25°C PD (W)	VR (V)	IF (A)	TEMP RNG. CODE - +	2 MINIMUM RESPONSIVITY Re (A/W)	SOUR-CE	λ (m)	VR (V)	ACTIVE AREA Sq In	RESP. TIME (s)	CAPAC C (F)	SPECTRAL RANGE LOW λL (m)	HIGH λH (m)	NOISE EQ.PWR Pn Watt/Hz1/2	MTL	LEAD CODE	DRAWING
1	22PD18P	6	40n	10		50			1.0	F	925n		2.6 *	60n#	260p	400n	1.2u	80f	AD		PD411 Ø
2	33BH05P	6	50n	1.0		50			1.0	F	925n		5.6 *	70n#	80p	300n	1.2u	200f	AD		PD411a
3	33PD05P	6	55n	1.0		20			1.0	F	925n		5.6 *	85n#	550p	400n	1.2u	100f	AD		PD411a Ø
4	44BH05P	6	200n	1.0		20			1.0	F	925n		18 *	85n#	250p	300n	1.2u	500f	AD		PD411a Ø
5	44PH05P▼	6	200n	1.0		20			1.0	F	925n		18 *	85n#	250p	400n	1.2u	5.0p	AD		PD411a Ø
6	44PD05P	6	300n	1.0		10			1.0	F	925n		18 *	250n#	1.9p	400n	1.2u	300f	AD		PD411a Ø
7	OSD300-1	6	3.0u†	30		10			35 #		430n		300 *	20n#		250n	430n	1.7p	AD	♦	PD202a Ø
8	OSD5-0R2	6	30n†	30		30			50 #		630n		7.7m	15n#	5.0p	430n	900n	170f	AD	C ☑	PD109d Ø
9	OSD1-0-2	6	5.0n†	30		30	10m	27	55 #		630n		1.0 *	15n#	5.0p	430n	900n	70f	AD		PD386 Ø
10	OSD1-0R	6	5.0n†	30		30	10m	27	55 #		630n		1.0 *	15n#	5.0p	430n	900n	70f	AD		PD386 Ø
11	OSD1-0R2	6	5.0n†	30		30	10m	27	55 #		630n		1.0 *	15n#	5.0p	430n	900n	70f	AD		PD386 Ø
12	OSD5-0-2	6	30n†	30		30	10m	27	55 #		630n		5.0 *	15n#	10p	430n	900n	170f	AD		PD109e Ø
13	OSD5-0R	6	30n†	30		30	10m	27	55 #		630n		5.0 *	15n#	10p	430n	900n	170f	AD		PD109e Ø
14	OSD50-0-2	6	350n†	30		30	10m	27	55 #		630n		50 *	15n#	80p	430n	900n	570f	AD		PD199c Ø
15	OSD50-0R	6	350n†	30		30	10m	27	55 #		630n		50 *	15n#	80p	430n	900n	570f	AD		PD199c Ø
16	OSD50-0R2	6	350n†	30		30	10m	27	55 #		630n		50 *	15n#	80p	430n	900n	570f	AD		PD199c Ø
17	OSD200-0	6	1.8u†	30		30			55 #		630n		200 *	15n#	250p	430n	900n	1.3p	AD	♦	PD202a Ø
18	OSD300-0	6	3.0u†	30		30			55 #		630n		300 *	15n#	400p	430n	900n	1.7p	AD	♦	PD202a Ø
19	OSD200E	6	1.8u†	30	60m	30		07	60 #		900n		310m	15n#	250p	350n	1.1u	1.3p	AD		PD202a Ø
20	OSD300E	6	3.0u†	30	60m	30		07	60 #		900n		465m	15n#	400p	350n	1.1u	1.7p	AD		PD202a Ø
21	OSD1-2-2	6	5.0n†	30		60	10m	27	65 #		630n		1.0 *	10n#		630n	900n	70f	AD		PD386 Ø
22	OSD1-2R	6	5.0n†	30		60	10m	27	65 #		630n		1.0 *	10n#		630n	900n	70f	AD		PD386 Ø
23	OSD1-2R2	6	5.0n†	30		60	10m	27	65 #		630n		1.0 *	10n#		630n	900n	70f	AD		PD386 Ø
24	OSD5-2-2	6	30n†	30		60	10m	27	65 #		630n		5.0 *	10n#		630n	900n	170f	AD		PD109e Ø
25	OSD5-2R	6	30n†	30		60	10m	27	65 #		630n		5.0 *	10n#		630n	900n	170f	AD		PD109e Ø
26	OSD5-2R2	6	30n†	30		60	10m	27	65 #		630n		5.0 *	10n#		630n	900n	170f	AD		PD109e Ø
27	OSD50-2-2	6	350n†	30		60	10m	27	65 #		630n		50 *	10n#		630n	900n	570f	AD		PD199c Ø
28	OSD50-2R	6	350n†	30		60	10m	27	65 #		630n		50 *	10n#		630n	900n	570f	AD		PD199c Ø
29	OSD50-2R2	6	350n†	30		60	10m	27	65 #		630n		50 *	10n#		630n	900n	570f	AD		PD199c Ø
30	OSD200-2	6	1.8u†	30		60			65 #		630n		200 *	10n#		630n	900n	1.3p	AD	♦	PD202a Ø
31	OSD15-3T	6	100n	30		60	10m	27	75 #	B	900n	60	24m	10n		400n	1.1u		AD	A	None

PHOTODIODE, BLUE-OPTIMIZED

35	MBC2014CF	7	10p	1.0		10		26							500p	400n	900n		AD		PD265f
36	MBC8026CF	7	10p	1.0		10		26							1.4u	400n	900n		AD		PD265h
37	VTB1013BI	7	20p	2.0						C			1.6 *		310p	200n	1.1u		AD		TO-18 Ø
38	VTB1012BI	7	500p	2.0						C			1.6 *		310p	200n	1.1u		AD		TO-18 Ø
39	CP22C	7	4.0n	1.0	50m	30		27					6.2m			400n	1.1u		AD	B	PD1165
40	CP44H	7	20n	1.0	200m	30		27					25m			400n	1.1u		AD	A	PD1159a
41	CP55	7	20n	1.0	300m	30		27					39m			400n	1.1u		AD	A	PD1163
42	CP1010B	7	50n	1.0	200m	30		27					155m			400n	1.1u		AD	B	PD1164
43	BP2BC	7	1.0n	1.0		10		26	110p†§	C			2.6 *		450p	450n	600n		AD	A	PD265f
44	BP5BC	7	1.0n	1.0		10		26	280p†§	C			6.9 *		650p	450n	600n		AD	A	PD265g
45	SFH100	7	10n	7.0	100m	7.0		48%	150n§	C		5.0	24 *	8.0u#	1.0u	300n	1.1u		AD	♦	PD1410 ☑
46	110PB9M	7	686n	10		5.0			310n				86 *	1.5u#	6.7n			1.0p	AD		PD165f
47	VTB1013I	7	20p	2.0					1.5m	C	365n		1.6 *		310p	200n	1.1u		AD		TO-18 Ø
48	VTB1012I	7	500p	2.0					1.5m	C	365n		1.6 *		310p	200n	1.1u		AD		TO-18 Ø
49	VTB5041J	7	100p	2.0					5.0m	C	365n		5.1 *		1.0n	200n	1.1u		AD		TO-5 Ø
50	VTB5040J	7	2.0u	2.0					5.0m	C	365n		5.1 *		1.0n	200n	1.1u		AD		TO-5 Ø
51	VTB5051J	7	250n	2.0					12m	C	365n		14 *		3.0n	200n	1.1u		AD		TO-5 Ø
52	VTB5051UVJ	7	250n	2.0					12m	C	365n		14 *		3.0n	200n	1.1u		AD		TO-5 Ø
53	VTB5050J	7	3.5u	2.0					12m	C	365n		14 *		3.0n	200n	1.1u		AD		TO-5 Ø
54	VTB5050UVJ	7	3.5u	2.0					12m	C	365n		14 *		3.0n	200n	1.1u		AD		TO-5 Ø
55	VTB6061J	7	2.0u	2.0					37m	C	365n		37 *		8.0n	200n	1.1u		AD		TO-8 Ø
56	VTB6060J	7	5.0u	2.0					37m	C	365n		37 *		8.0n	200n	1.1u		AD		TO-8 Ø
57	VTB6060UVJ	7	5.0u	2.0					37m	C	365n		37 *		8.0n	200n	1.1u		AD		TO-8 Ø
58	VTB6061UVJ	7	5.0u	2.0					37m	C	365n		37 *		8.0n	200n	1.1u		AD		TO-8 Ø
59	VTB8341	7	100p	2.0		10		2A	125m	C	400n		8.0m		1.0n	300n	1.1u		AD		PV174d
60	VTB8340	7	2.0u	2.0		10		2A	125m	C	400n		8.0m		1.0n	300n	1.1u		AD		PV174d
61	OSD15-5T	7	160p†	0		12		57	150m		450n		15 *	1.0u	280p			47f	AD		TO-5
62	OSD7.5-5T	7	200p†	0		12	10m	27	150m	B	450n	0	12m	1.0u	200p	350n	1.0u		AD	A	TO-5
63	OSD3-5T	7	400p	0		10	10m	27	150m	B	450n	0	4.7m	1.0u	100p	350n	1.0u		AD	A	TO-18
64	OSD60-5T	7	1.0n†	0		12		57	150m		450m		60 *	1.0u	1.2n			400f	AD		TO-8
65	OSD100-5T	7	2.0n†	0		10		57	150m		450n		100 *	1.0u	2.5n			350f	XX		None
66	OSD1-5	7	5.0n	10		10	10m	27	150m†		400n		1.0 *	1.0u	40p	450n	850n	60f	AD		PD14h
67	OSD5-5	7	30n†	10		10	10m	27	150m†		400n		5.0 *	1.0u	150p	450n	850n	70f	AD		PD14j
68	OSD200-5T	7	50n	0		10	10m	27	150m	B	450n	0	315m	1.0u	4.5n	350n	1.1u	1.0p	AD	A	None
69	OSD300-5T	7	100n	0		10	10m	27	150m	B	450n	0	472m	1.0u	6.5n	350n	1.1u	2.0p	AD	A	None
70	OSD50-5	7	350n†	10		10	10m	27	150m†		400n		50 *	1.0u	1.5n	450n	850n	200f	AD		PD199b Ø
71	OSD100-5	7	800n	10		10	10m	27	150m†		400n		100 *	1.0u	2.5n	450n	850n	200f	AD		PD201b Ø
72	VTB9414	7	10p			40 †		57	.20 †	C	365n		1.6 *		.31n	320n	1.1k		XX		PD265c
73	VTB4051	7	250p			40 †		57	.20 †	C	365n		14 *			320n	1.1k		XX		PV174c
74	VTB4050	7	3.5k			40 †		57	.20 †	C	365n		14 *			320n	1.1k		XX		PV174c
75	VTB8444B	7	5p	2.0		40			.28	C	750n		8.0m*		1.0n	330n	720n		XX		PD265
76	VTB8443B	7	10p	2.0		40			.28	C	750n		8.0m*		1.0n	330n	720n		XX		PD265
77	VTB8442B	7	30p	2.0		40			.28	C	750n		8.0m*		1.0n	330n	720n		XX		PD265
78	VTB8441B	7	100p	2.0		40			.28	C	750n		8.0m*		1.0n	330n	720n		XX		PD265
79	VTB8440B	7	2.0u	2.0		40			.28	C	750n		8.0m*		1.0n	330n	720n		XX		PD265
80	VTB1113BI	7	20p	2.0					300m	C	365n		1.6 *			200n	1.1u		AD		TO-18 Ø
81	VTB1113I	7	20p	2.0					300m	C	365n		1.6 *		310p	200n	1.1u		AD		TO-18 Ø
82	VTB1112BI	7	500p	2.0					300m	C	365n		1.6 *			200n	1.1u		AD		TO-18 Ø
83	VTB1112I	7	500p	2.0					300m	C	365n		1.6 *		310p	200n	1.1u		AD		TO-18 Ø
84	SD056-12-12-011																				
		7	.30n†	5.0			.10m	2 ♦	.45 †				1.3 *	25n	150p				XX		PD42t
85	VTB8444	7	5p	2.0		40			0.5	C	365n		8.0m*		1.0n	320n	1.1u		XX		PD265
86	VTB8443	7	10p	2.0		40			0.5	C	365n		8.0m*		1.0n	320n	1.1u		XX		PD265
87	VTB8442	7	30p	2.0		40			0.5	C	365n		8.0m*		1.0n	320n	1.1u		XX		PD265
88	VTB8441	7	100p	2.0		40			0.5	C	365n		8.0m*		1.0n	320n	1.1u		XX		PD265
89	SD041-12-12-011																				
		7	.13n†	5.0			.08m	2 ♦	.50 †				.85 *	18n	85p			7.3f#	XX		PD42t
90	SD076-12-12-011																				
		7	.45n†	5.0			.27m	2 ♦	.50 †				2.9 *	46n	290p				XX		PD42t
91	SD100-12-12-021																				
		7	.75n†	5.0			.42m	2 ♦	.50 †				5.1 *	75n	510p				XX		PD42u
92	SD172-12-12-021																				
		7	2.0n†	5.0			.94m	2 ♦	.50 †				15 *	207n	1.5n				XX		PD42u
93	SD200-12-12-041																				
		7	3.0n†	5.0			1.1m	2 ♦	.50 †				20 *	280n	2.0n				XX		PD1063
94	SD290-12-12-041																				
		7	3.0n†	1.0			1.5m	2 ♦	.50 †				42 *	475n	4.2n				XX		PD1063a
95	SCA8041C	7	10n	25		200			0.5		900n		0.8 *		5.0p				AD	Y §	TO-18
96	SCA8102C	7	50n	25		100			0.5		900n		6.2 *		10p				AD	AQ§	TO-5
97	SCA8101C	7	100n	25		100			0.5		900n		5.1 *		15p				AD	Y	TO-5
98	VTB8440	7	2.0u	2.0		40			0.5	C	365n		8.0m*		1.0n	320n	1.1u		XX		PD265
99	SD1100-12-22-181(A)		(A)																		
		7	6.0u	10			4.0n	2 ♦	.55 †				613 *		9.0n					B	PD300b

PHOTODIODE, EYE-RESPONSE-OPTIMIZED

Continued on Next Page

SYMBOLS AND CODES EXPLAINED IN INTERPRETER

10. PHOTODIODES - Eye-Response-Optimized

IN ORDER OF: (1)TYPE (2) RESPONSIVITY (3) MAX DARK CURRENT & (4) TYPE NUMBER

LINE No.	4 TYPE NUMBER	1 TYPE	3 MAX DARK CURR @ 25°C ID (A)	VR TEST (V)	MAX RATINGS @ 25°C PD (W)	VR (V)	IF (A)	TEMP RNG. CODE - +	2 MINIMUM RESPONSIVITY Re (A/W)	SOUR-CE	λ (m)	VR (V)	ACTIVE AREA Sq In	RESP. TIME (s)	CAPAC C (F)	SPECTRAL RANGE LOW λL (m)	HIGH λH (m)	NOISE EQ.PWR Pn Watt/Hz1/2	M T L	LEAD CODE	DRAWING
1	CBC2014CF	8	1.0p†	1.0		10		26					2.8 *		250p	400n	700n		AD		PD1154
2	CP1511	8	2.0p	1.0		10		26					1.6 *	250u#		400n	700n		CA	A	PD1166
3	CP1511B	8	2.0p	1.0		10		26					2.6m	250u		400n	700n		CA	B	PD1168
4	CP1511C	8	2.0p	1.0		10		26					2.6m	250u		400n	700n		CA	B	PD1167
5	CBC3026CF	8	3.0p†	1.0		10		26					7.8 *		800p	400n	700n		AD		PD1155
6	CP1812	8	5.0n	1.0		10		26					2.1 *	250u#		400n	700n		CA	A	PD1166
7	PH201A	8	3.0p	2.0		5.0	1.0m	36	100p§					150u#		360n	660n		CA	♦	PD265b Ø
8	OSD15E	8				10		27	4.5n§	C	550n	0	24m	1.0u	600p	400n	700n		AD	A	None
9	OSD60E	8				10		27	18n§	C	550n	0	94m	1.0u		400n	700n		AD	A	None
10	OSD3E	8				10		27	1.0m§	C	550n	0	4.7m	1.0u	150p	400n	700n		AD	A	None
11	NSL810BG	8	500n	1.0		10		6C	170m		500n		5.5 *		125p	400n	700n		AD	E	TO-18
12	NSL710BG	8	1.0u	1.0	100m	5.0	10m	6C	170m	E			55m	1.0u	1.0u	450n	650n		AD		PD405 Ø
13	NSL880BG	8	2.5u	1.0		10		6C	170m		500n		15 *		375p	400n	700n		AD	E	TO-5
14	NSL780BG	8	5.0u	1.0	200m	5.0	10m	6C	170m	E			150m	3.0u	3.0u	450n	650n		AD		PD405 Ø
15	OSD5E	8	30n†	30	60m	10	10m	07	180m		550n	30	5.0 *	1.0u	200p	460n	660n	13u§	AD		PD14j
16	NSL811BG	8	5.0n	1.0		40		6C	200m		500n		4.8 *		100p	400n	700n		AD	F	TO-18
17	NSL883BG	8	10n	1.0		20		6C	200m		500n		16 *		400p	400n	700n		AD	F	TO-5
18	SD44431-12-253																				
		8	100n	1.0					.20		555n		.03	1.0u	10n				XX	Z	PV169a
19	SD44431-22-173																				
		8	100n	1.0					.20		555n		.03	200n	1.6n				XX		PV170a
20	44PBF7C	8	80n	1.0		10			250m	E	580n		18 *	250n#	1.9n	440n	680n	300f	AD		PD413 Ø
21	68PBF9C	8	200n	1.0		5.0			250m	E	580n		50 *	700n#	5.2n	440n	680n	600f	AD		PD413a Ø
22	110PBF9	8	360n	1.0		5.0			250m	E	580n		86 *	1.5u#	9.5n	440n	680n	800f	AD		PD413a Ø
23	OSD1E	8	5.0n†	30	60m	10	10m	07	1.5 §		550n	30	1.0 *	1.0u	50p	350n	1.2u	40u§	AD		PD14h
24	OSD100E	8	800n†	30	60m	30		07	60 #		900n		155m	15n#	150p	350n	1.1u	870f	AD		PD201a Ø

PHOTODIODE, INFRARED-OPTIMIZED

LINE No.	TYPE NUMBER	TYPE	MAX DARK CURR ID (A)	VR TEST (V)	PD (W)	VR (V)	IF (A)	TEMP RNG. CODE	Re (A/W)	SOUR-CE	λ (m)	VR (V)	ACTIVE AREA Sq In	RESP. TIME (s)	CAPAC C (F)	LOW λL (m)	HIGH λH (m)	NOISE EQ.PWR Pn	M T L	LEAD CODE	DRAWING
28	A500(3)	9						K2			0.6m		0.2			1.0u	5.5u		XX		PD538
29	A600(3)	9						K2			10u		0.2			1.0u	5.5u		XX		PD538
30	L700	9						0K					5.6m						XX		PD412
31	HP3F	9	10n	10				37		C	900n					450n	1.0u		AD	A	PD1135
32	BPW41D	9	30n	10	150m	32		38		C	950n	5.0	2.8 *	50n#	40p	730n	1.0u	10f	BC	B	PD946
33	4080(2)	9	1.0G*					X2					6.2m	5.0u§		1.0u	5.0u		Se		PD355 ☑
34	SIGA1-9145-1	9	9.0G*					SX♦					1.2m			1.0u	17u		BR	.	PD154 Ø
35	SIGA2-9145-1	9	9.0G*					SX♦					4.8m			1.0u	17u		BR		PD154 Ø
36	SIGA-.5-9145-1																				
		9	9.0G*					SX♦					304u			1.0u	17u		BR		PD154 Ø
37	1101(1)	9	30G*					X2					96u	40u§		1.0u	3.0u		BH		PD182 ☑
38	1102(1)	9	30G*					X2					387u	40u§		1.0u	3.0u		BH		PD182 ☑
39	1103(1)	9	30G*					X2					1.5m	40u§		1.0u	3.0u		BH		PD182 ☑
40	1104(1)	9	30G*					X2					3.4m	40u§		1.0u	3.0u		BH		PD182 ☑
41	1105(1)	9	30G*					X2					6.2m	40u§		1.0u	3.0u		BH		PD182 ☑
42	1106	9	30G*					X2					13m	40u§		1.0u	3.0u		BH		PD182 ☑
43	1107	9	30G*					X2					24m	40u§		1.0u	3.0u		BH		PD182 ☑
44	1108	9	30G*					X2					38m	40u§		1.0u	3.0u		BH		PD182 ☑
45	1109	9	30G*					X2					55m	40u§		1.0u	3.0u		BH		PD182 ☑
46	1110(2)	9	30G*					X2					99m	40u§		1.0u	3.0u		BH		PD182 ☑
47	1111(2)	9	30G*					X2					155m	40u§		1.0u	3.0u		BH		PD182 ☑
48	1112	9	30G*					X2					387u	40u§		1.0u	3.0u		BH		PD182 ☑
49	1113(2)	9	30G*					X2					3.1m	40u§		1.0u	3.0u		BH		PD182 ☑
50	1114	9	30G*					X2					4.6m	40u§		1.0u	3.0u		BH		PD182 ☑
51	1115(2)	9	30G*					X2					6.2m	40u§		1.0u	3.0u		BH		PD182 ☑
52	1121(2)	9	30G*					X2					968u	40u§		1.0u	3.0u		BH		PD182 ☑
53	2101(2)	9	30G*					X2					96u	40u§		1.0u	3.0u		BH		PD169e Ø
54	2102(2)	9	30G*					X2					387u	40u§		1.0u	3.0u		BH		PD169e Ø
55	2103(3)	9	30G*					X2					1.5m	40u§		1.0u	3.0u		BH		PD169e Ø
56	2104(2)	9	30G*					X2					3.4m	40u§		1.0u	3.0u		BH		PD169d Ø
57	2105(3)	9	30G*					X2					6.2m	40u§		1.0u	3.0u		BH		PD169d Ø
58	2106	9	30G*					X2					13m	40u§		1.0u	3.0u		BH		PD169d Ø
59	2107	9	30G*					X2					24m	40u§		1.0u	3.0u		BH		PD165a Ø
60	2108(3)	9	30G*					X2					38m	40u§		1.0u	3.0u		BH		PD165a Ø
61	2109	9	30G*					X2					55m	40u§		1.0u	3.0u		BH		PD165a Ø
62	2112(1)	9	30G*					X2					387u	40u§		1.0u	3.0u		BH		PD165a Ø
63	2113(1)	9	30G*					X2					3.1m	40u§		1.0u	3.0u		BH		PD165a Ø
64	2114	9	30G*					X2					4.6m	40u§		1.0u	3.0u		BH		PD165a Ø
65	2115(2)	9	30G*					X2					6.2m	40u§		1.0u	3.0u		BH		PD165a Ø
66	2121(1)	9	30G*					X2					96m	40u§		1.0u	3.0u		BH		PD165a Ø
67	1201(2)	9	45G*					X2					96u	120u§		1.0u	3.0u		BH		PD182 ☑
68	1202(1)	9	45G*					X2					387u	120u§		1.0u	3.0u		BH		PD182 ☑
69	1203(1)	9	45G*					X2					1.5u	120u§		1.0u	3.0u		BH		PD182 ☑
70	1204(2)	9	45G*					X2					3.4u	120u§		1.0u	3.0u		BH		PD182 ☑
71	1205(2)	9	45G*					X2					6.2m	120u§		1.0u	3.0u		BH		PD182 ☑
72	1206	9	45G*					X2					13m	120u§		1.0u	3.0u		BH		PD182 ☑
73	1207	9	45G*					X2					24m	120u§		1.0u	3.0u		BH		PD182 ☑
74	1208	9	45G*					X2					38m	120u§		1.0u	3.0u		BH		PD182 ☑
75	1209(2)	9	45G*					X2					55m	120u§		1.0u	3.0u		BH		PD182 ☑
76	1210	9	45G*					X2					99m	120u§		1.0u	3.0u		BH		PD182 ☑
77	1211	9	45G*					X2					155m	120u§		1.0u	3.0u		BH		PD182 ☑
78	1212	9	45G*					X2					387u	120u§		1.0u	3.0u		BH		PD182 ☑
79	1213(2)	9	45G*					X2					3.1m	120u§		1.0u	3.0u		BH		PD182 ☑
80	1214	9	45G*					X2					4.6m	120u§		1.0u	3.0u		BH		PD182 ☑
81	1215(2)	9	45G*					X2					6.2m	120u§		1.0u	3.0u		BH		PD182 ☑
82	1221	9	45G*					X2					968m	120u§		1.0u	3.0u		BH		PD182 ☑
83	2201(3)	9	45G*					X2					96u	120u§		1.0u	3.0u		BH		PD169e Ø
84	2202(2)	9	45G*					X2					387u	120u§		1.0u	3.0u		BH		PD169e Ø
85	2203(2)	9	45G*					X2					1.5m	120u§		1.0u	3.0u		BH		PD169e Ø
86	2204(1)	9	45G*					X2					3.4m	120u§		1.0u	3.0u		BH		PD169d Ø
87	2205	9	45G*					X2					6.2m	120u§		1.0u	3.0u		BH		PD169d Ø
88	2206(1)	9	45G*					X2					13m	120u§		1.0u	3.0u		BH		PD169d Ø
89	2207	9	45G*					X2					24m	120u§		1.0u	3.0u		BH		PD165a Ø
90	2208(1)	9	45G*					X2					38m	120u§		1.0u	3.0u		BH		PD165a Ø
91	2209(1)	9	45G*					X2					55m	120u§		1.0u	3.0u		BH		PD165a Ø
92	2212	9	45G*					X2					387u	120u§		1.0u	3.0u		BH		PD165a Ø
93	2213(1)	9	45G*					X2					3.1m	120u§		1.0u	3.0u		BH		PD165a Ø
94	2214	9	45G*					X2					4.6m	120u§		1.0u	3.0u		BH		PD165a Ø
95	2215(1)	9	45G*					X2					6.2m	120u§		1.0u	3.0u		BH		PD165a Ø
96	2221(1)	9	45G*					X2					96m	120u§		1.0u	3.0u		BH		PD165a Ø
97	A100U	9	70G*					K2					2.8m			1.0u	3.5u		BF		PD316 Ø
98	1301(2)	9	80G*					X2					96u	200u§		1.0u	3.0u		BH		PD182 ☑
99	1302(2)	9	80G*					X2					387u	200u§		1.0u	3.0u		BH		PD182 ☑
100	1303(1)	9	80G*					X2					1.5m	200u§		1.0u	3.0u		BH		PD182 ☑
101	1304(1)	9	80G*					X2					3.4m	200u§		1.0u	3.0u		BH		PD182 ☑
102	1305(1)	9	80G*					X2					6.2m	200u§		1.0u	3.0u		BH		PD182 ☑
103	1306	9	80G*					X2					13m	200u§		1.0u	3.0u		BH		PD182 ☑
104	1307	9	80G*					X2					24m	200u§		1.0u	3.0u		BH		PD182 ☑
105	1308	9	80G*					X2					38m	200u§		1.0u	3.0u		BH		PD182 ☑
106	1309	9	80G*					X2					55m	200u§		1.0u	3.0u		BH		PD182 ☑
107	1310(3)	9	80G*					X2					99m	200u§		1.0u	3.0u		BH		PD182 ☑

SYMBOLS AND CODES EXPLAINED IN INTERPRETER

10. PHOTODIODES - Infrared-Optimized (Cont'd)

IN ORDER OF: (1)TYPE (2) RESPONSIVITY
(3) MAX DARK CURRENT & (4) TYPE NUMBER

LINE No.	4 TYPE NUMBER	1 TYPE	3 MAX DARK CURR @ 25°C ID (A)	VR TEST (V)	MAX RATINGS @ 25°C PD (W)	VR (V)	IF (A)	TEMP RNG. CODE - +	2 MINIMUM RESPONSIVITY Re (A/W)	SOUR -CE	λ (m)	VR (V)	ACTIVE AREA Sq In	RESP. TIME (s)	CAPAC C (F)	SPECTRAL RANGE LOW λL (m)	HIGH λH (m)	NOISE EQ.PWR Pn Watt/ Hz1/2	MT L	LEAD CODE	DRAWING
1	1311(2)	9	80G*					X2					155m	200u§		1.0u	3.0u		BH		PD182 ☑
2	1312(2)	9	80G*					X2					387u	200u§		1.0u	3.0u		BH		PD182 ☑
3	1313(2)	9	80G*					X2					3.1m	200u§		1.0u	3.0u		BH		PD182 ☑
4	1314	9	80G*					X2					4.6m	200u§		1.0u	3.0u		BH		PD182 ☑
5	1315(2)	9	80G*					X2					6.2m	200u§		1.0u	3.0u		BH		PD182 ☑
6	1321(2)	9	80G*					X2					968u	200u§		1.0u	3.0u		BH		PD182 ☑
7	2301(2)	9	80G*					X2					96u	200u§		1.0u	3.0u		BH		PD169e Ø
8	2302(2)	9	80G*					X2					387u	200u§		1.0u	3.0u		BH		PD169e Ø
9	2303(2)	9	80G*					X2					1.5m	200u§		1.0u	3.0u		BH		PD169e Ø
10	2304(2)	9	80G*					X2					3.4m	200u§		1.0u	3.0u		BH		PD169d Ø
11	2305	9	80G*					X2					6.2m	200u§		1.0u	3.0u		BH		PD169d Ø
12	2306	9	80G*					X2					13m	200u§		1.0u	3.0u		BH		PD169d Ø
13	2307(2)	9	80G*					X2					24m	200u§		1.0u	3.0u		BH		PD165a Ø
14	2308	9	80G*					X2					38m	200u§		1.0u	3.0u		BH		PD165a Ø
15	2309	9	80G*					X2					55m	200u§		1.0u	3.0u		BH		PD165a Ø
16	2312	9	80G*					X2					387u	200u§		1.0u	3.0u		BH		PD165a Ø
17	2313	9	80G*					X2					3.1m	200u§		1.0u	3.0u		BH		PD165a Ø
18	2314	9	80G*					X2					4.6m	200u§		1.0u	3.0u		BH		PD165a Ø
19	2315	9	80G*					X2					6.2m	200u§		1.0u	3.0u		BH		PD165a Ø
20	2321	9	80G*					X2					96m	200u§		1.0u	3.0u		BH		PD169d Ø
21	SA-FP10.10PBS1A	9	80G*										400m	400u§		1.0u	3.4u		BH		PD342
22	SA-FP10.10PBS2	9	80G*										400m	400u§		1.0u	3.4u		BH		PD342
23	1416	9	100G*					X2					3.4u	500u§		1.0u	3.0u		BH		PD182 ☑
24	1417	9	100G*					X2					24m	500u§		1.0u	3.0u		BH		PD182 ☑
25	1517	9	100G*					X2					24m	500u§		1.0u	3.0u		BH		PD182 ☑
26	1518(2)	9	100G*					X2					387u	500u§		1.0u	3.0u		BH		PD182 ☑
27	2416	9	100G*					X2					3.4m	1.0m§		1.0u	3.0u		BH		PD165a Ø
28	2417	9	100G*					X2					24m	1.0m§		1.0u	3.0u		BH		PD165a Ø
29	2517	9	100G*					X2					24m	1.0m§		1.0u	3.0u		BH		PD165a Ø
30	2518	9	100G*					X2					387u	1.0m§		1.0u	3.0u		BH		PD165a Ø
31	HP5FRIII	9	30n	10	150m	35		36	50n†§	C	940n		9.0 *			880n	1.0u		AD	A	PD1137a
32	HP3FRII	9	10n	10				37	60n†§	C	940n		9.0 *			700n	1.0u		AD	A	PD1135
33	HP5FRII	9	30n	10	150m	35		37	60n†§	C	940n		9.0 *			700n	1.0u		AD	A	PD1137
34	HP3MLRII	9	10u	5.0			60	28	60n†§	C			10 *		175p	450n	1.0u		AD	A §	TO-5 Ø
35	HP3K	9	100n	10		50		2A	65n†§	C	830n		10 *	150n	175p	450n	1.0u		AD	A §	PD8h Ø
36	HP3KRII	9	100n	10				2A	65n†§	C	940n		10 *			700n	1.0u		AD	A §	PD1136
37	HP3ML	9	1.0u	5.0		50		28	75n†§	C	830n		10 *	150n	175p	450n	1.0u		AD	A §	PD12g Ø
38	SFH206	9	30n	10	150m	20		48%	16u$		950n	5.0	7.3 *	350n#	72p	800n	1.1u	370p	AD	B	PD457
39	SFH206K	9	30n	10	150m	20		48%	50u$		950n	5.0	7.3 *	350n#	72p	400n	1.1u	420p	AD	B	PD457
40	RPY76A	9	100M*		20m			25	2.0m		2.0u		1.5m	250u		1.5u	3.0u	10p	BH	☑	PD42c Ø
41	2-312	9	6.0G*						350m		5.0u	0	6.3m			1.0u	5.5u		BG		PD315 Ø
42	LIODS-LF	9			5.0 †			5C	.38 †		850n		1.3k*	2.5u#	13n	300n	1.1u	75f	AD		None
43	MFOD100▼	9	2.0n	20	100m	200 †		5H§	400m		900n		19m§	1.0n	4.0p	520n	950n		XX	A	PD7g Ø
44	OSD1-3HSA	9	5.0n†	80		80			400m†		900n		1.5m	1.0n#	3.0p	900n	1.0u	70f	AD	V Ø	PD27b Ø
45	1A130	9	5.0	45	130m	50		49§	.40 †		940n			5.0n#	5.0p	600n	.1u		XX	B	PD547 Ø
46	MC32(2)	9	40n	100					450m		905n		6.9m	5.0n#	6.0p	890n	1.1u	200f	XX	A	PD161d
47	8016	9				10			470m		900n		1.5m		30p	350n	1.1u	110p	AD		PD169a Ø
48	8016L	9				10			470m		900n		1.5m		30p	350n	1.1u	11f	AD	A §	PD169f Ø
49	8035	9				10			470m		900n		7.9m		150p	350n	1.1u	170p	AD		PD169f Ø
50	8058	9				10			470m		900n		46m		800p	350n	1.1u	220p	AD		PD165c Ø
51	8110(2)	9				10			470m		900n		154m		2.6n	350n	1.1u	500p	AD		PD165b Ø
52	8235	9				10			470m		900u		7.9m		150p	200n	1.1u	12p	AD		PD169f Ø
53	8258	9				10			470m		900u		46m		800p	200n	1.1u	15p	AD		PD162c Ø
54	SD076-11-11-011	9	.45n†	5.0			.30m	2 ♦	.50 †				2.9 *	16n	290p				XX		PD42t
55	SD100-11-11-021	9	.75n†	5.0			.50m	2 ♦	.50 †				5.1 *	23n	510p				XX		PD42u
56	SD172-11-11-021	9	2.0n†	5.0			1.5m	2 ♦	.50 †				15 *	56n	1.5n				XX		PD42u
57	SD200-11-11-041	9	3.0n†	5.0			2.0m	2 ♦	.50 †				20 *	73n	2.0n				XX		PD1063
58	AX65R2F	9	5.0n	20		30		57	500m	B	850n	20	1.0 *	4.0n#	3.5p	400n	1.0u	36f	AD	Z	TO-18
59	SD290-11-11-041	9	7.0n†	5.0			4.2m	2 ♦	.50 †				42 *	147n	4.2n				XX		PD1063a
60	SD444-11-11-171	9	15n†	5.0			10m	2 ♦	.50 †				100 *	336n	10n				XX		PV170
61	VTS1188L	9	50n	100m					0.5	C	925n		11 *		180p	400n	1.1u		AD		PD979 Ø
62	VTS4085S	9	50n	100m					0.5	C	925n		21 *		350p	400n	1.1u		AD		PD1108 Ø
63	VTS1188	9	250n	100m					0.5	C	925n		11 *		180p	400n	1.1u		AD		PD979 Ø
64	VTS4085H	9	250n	100m					0.5	C	925n		21 *		350p	400n	1.1u		AD		PD1108 Ø
65	L4520	9	10u	6.0		6.0	10m	X8	500m		1.5u	6.0	47u	100p§	5.0p	1.0u	1.8u	100f#	AB		PD271a Ø
66	OSD1-4	9	5.0n†	30		180	10m	27	550m†		1.0m		1.0 *	20n#		900n	1.0u	70f	AD		PD14h
67	OSD5-4	9	30n†	30		180	10m	27	550m†		1.0m		5.0 *	20n#	10p	900n	1.1u	170f	AD		PD109e Ø
68	OSD50-4	9	350n†	30		180			550m†		1.0m		50 *	20n#	26p	900n	1.0u	570f	AD	♦	PD199b Ø
69	OSD100-4	9	800n†	30		180	10m	27	550m†		1.0m		100 *	20n#	50p	900n	1.0u	870f	AD	♦	PD201b Ø
70	SD1100-11-21-181(A)	9	6.0u	10			4.0n	2 ♦	.55 †				613 *		9.0n					B	PD300b
71	FIL-C4D	9	50n†	10		25		28	.57 †		930n		6.4 *	70n#	27p	350n	1.8u	18p	AD		PD503
72	FIL-C10D	9	150n†	10		25		28	.57 †		930n		103 *	100n	260p	350n	1.8u	22p	AD		PD504
73	FIL-S4D	9	3.0 †	10		50		28	.57 †		930n		6.4 *	12n	8p	350n	1.8u	500p	AD		PD503
74	FIL-S2D	9	5.0 †	10		50		28	.57 †		930n		6.4 *	15n	11p	350n	1.8u	650p	AD		PD503
75	FIL-S9D	9	10 †	10		50		28	.57 †		930n		60 *	30n	62p	350n	1.8u	950p	AD		PD504
76	OSD1-3	9	5.0n†	30		100	10m	27	620m†		900n		1.0 *	10n#		630n	900n	70f	AD		PD14h
77	OSD5-3	9	30n†	30		100	10m	27	620m†		900n		5.0 *	10n#	10p	630n	900n	170f	AD		PD109e Ø
78	OSD50-3	9	350n†	30		100			620m†		900n		50 *	10n#		630n	900n	570f	AD	♦	PD199b Ø
79	OSD100-3	9	800n†	30		100	10m	27	620m†		900n		100 *	10n#		630n	900n	870f	AD	♦	PD201b Ø
80	L4521	9	10u	10		20	10m	X8	1.0 †		1.5u	10	1.2m	300p§	40p	1.0u	1.8u		AB		PD274 Ø
81	INAS1-40742	9	400G*					KX♦	1.0 †		3.0u		1.2m	1.0u§		1.0u	3.0u		BF		PD152 Ø
82	INAS1-44782	9	400G*					KX♦	1.0 †		3.0u		1.2m	1.0u§		1.0u	3.0u		BF		PD153 Ø
83	ISC302A	9	33G*					KX♦	2.0 †		5.0u		1.9m	1.0u§		1.1u	5.5u	1.3p#	BG		PD276 Ø
84	ISC363	9	33G*					KX♦	2.0 †		5.0u		6.1m	1.0u§		1.1u	5.5u	2.0p#	BG		PD163 Ø
85	ISC302B	9	49G*					KX♦	2.0 †		5.0u		1.9m	1.0u§		1.1u	5.5u	1.3p#	BG		PD276 Ø
86	ISC363A	9	49G*					KX♦	2.0 †		5.0u		6.1m	1.0u§		1.1u	5.5u	2.0p#	BG		PD163 Ø
87	ISC302C	9	66G*					KX♦	2.0 †		5.0u		1.9m	1.0u§		1.1u	5.5u	1.3p#	BG		PD276 Ø
88	ISC363B	9	66G*					KX♦	2.0 †		5.0u		6.1m	1.0u§		1.1u	5.5u	2.0p#	BG		PD163 Ø
89	ISC302D	9	82G*					KX♦	2.0 †		5.0u		1.9m	1.0u§		1.1u	5.5u	1.3p#	BG		PD276 Ø
90	ISC363C	9	82G*					KX♦	2.0 †		5.0u		6.1m	1.0u§		1.1u	5.5u	2.0p#	BG		PD163 Ø
91	ISC386	9	82G*					KX♦	2.0 †		5.0u		.44m	1.0u§		1.1u	5.5u	0.5p#	BG		PD277 Ø
92	ISC302E	9	99G*					KX♦	2.0 †		5.0u		1.9m	1.0u§		1.1u	5.5u	1.3p#	BG		PD276 Ø
93	ISC363D	9	99G*					KX♦	2.0 †		5.0u		6.1m	1.0u§		1.1u	5.5u	2.0p#	BG		PD163 Ø
94	ISC386A	9	99G*					KX♦	2.0 †		5.0u		.44m	1.0u§		1.1u	5.5u	0.5p#	BG		PD277 Ø
95	ISC302F	9	111G					KX♦	2.0 †		5.0u		1.9m	1.0u§		1.1u	5.5u	1.3p#	BG		PD276 Ø
96	ISC363E	9	111G*					KX♦	2.0 †		5.0u		6.1m	1.0u§		1.1u	5.5u	2.0p#	BG		PD163 Ø
97	OTC3MI52	9	1.0G*					26	3.0 ☑		5.7u		6.2m	20n§		5.7u	6.0u		BG		PD162 Ø
98	OTC3MI52T	9	1.0G*					26	3.0 ☑		5.7u		6.2m	20n§		5.7u	6.0u		BG		PD162a Ø
99	OTC3MI52TC	9	1.0G*					26	3.0 ☑		5.7u		6.2m	20n§		5.7u	6.0u		BG		PD162b Ø
100	OSD1-4HSA1-2	9	10n†	100		100	10m	27	15 #		1.0u		1.0 *	10n#		900n	1.0u	70f	AD		PD386 Ø
101	OSD1-4HSA1R	9	10n†	100		100	10m	27	15 #		1.0u		1.0 *	10n#		900n	1.0u	70f	AD		PD386 Ø

SYMBOLS AND CODES
EXPLAINED IN INTERPRETER

10. PHOTODIODES - Infrared-Optimized (Cont'd)

IN ORDER OF: (1)TYPE (2) RESPONSIVITY
(3) MAX DARK CURRENT & (4) TYPE NUMBER

LINE No.	4 TYPE NUMBER	1 TYPE	3 MAX DARK CURR @ 25°C ID (A)	VR TEST (V)	MAX RATINGS @ 25°C PD (W)	VR (V)	IF (A)	TEMP RNG. CODE - +	2 MINIMUM RESPONSIVITY Re (A/W)	SOUR-CE	λ (m)	VR (V)	ACTIVE AREA Sq In	RESP. TIME (s)	CAPAC C (F)	SPECTRAL RANGE LOW λL (m)	HIGH λH (m)	NOISE EQ.PWR Pn Watt/Hz1/2	MTL	LEAD CODE	DRAWING
1	OSD1-4HSA1R2	9	10n†	100		100	10m	27	15 #		1.0u		1.0 *	10n#		900n	1.0u	70f	AD		PD386 Ø
2	OSD1-4HSA1	9	50n†	100		100			30 #		1.0u		1.5m	10n#	3.0p	900n	1.0u	70f	AD	V Ø	PD27b Ø
3	OSD60-4T	9				180	10m	27	45 #	B	1.1n	180	94m	2.0n		400n	1.1u		AD	A	None
4	OSD1-4HSA2-2	9	10n†	180		180	10m	27	45 #		1.0u		1.0 *	15n#		900n	1.0u	70f	AD		PD386 Ø
5	OSD1-4HSA2R	9	10n†	180		180	10m	27	45 #		1.0u		1.0 *	15n#		900n	1.0u	70f	AD		PD386 Ø
6	OSD1-4HSA2R2	9	10n†	180		180	10m	27	45 #		1.0u		1.0 *	15n#		900n	1.0u	70f	AD		PD386 Ø
7	OSD1-4HSA2	9	50n†	180		180			45 #		1.0u		1.5m	15n#	2.5p	900n	1.0u	70f	AD	V Ø	PD27b Ø
8	OSD1-4-2	9	5.0n†	30		180	10m	27	60 #		900n		1.0 *	20n#		900n	1.0u	70f	AD		PD386 Ø
9	OSD1-4R	9	5.0n†	30		180	10m	27	60 #		900n		1.0 *	20n#		900n	1.0u	70f	AD		PD386 Ø
10	OSD1-4R2	9	5.0n†	30		180	10m	27	60 #		900n		1.0 *	20n#		900n	1.0u	70f	AD		PD386 Ø
11	OSD5-4-2	9	30n†	30		180	10m	27	60 #		900n		5.0 *	20n#		900n	1.0u	170f	AD		PD109e Ø
12	OSD5-4R	9	30n†	30		180	10m	27	60 #		900n		5.0 *	20n#		900n	1.0u	170f	AD		PD109e Ø
13	OSD5-4R2	9	30n†	30		180	10m	27	60 #		900n		5.0 *	20n#		900n	1.0u	170f	AD		PD109e Ø
14	OSD50-4-2	9	350n†	30		180	10m	27	60 #		900n		50 *	20n#		900n	1.0u	570f	AD		PD199c Ø
15	OSD50-4R	9	350n†	30		180	10m	27	60 #		900n		50 *	20n#		900n	1.0u	570f	AD		PD199c Ø
16	OSD50-4R2	9	350n†	30		180	10m	27	60 #		900n		50 *	20n#		900n	1.0u	570f	AD		PD199c Ø
17	OSD200-4	9	1.8u†	30		180			60 #		900n		200 *	20n#	83p	900n	1.0u	1.3p	AD	♦	PD202a Ø
18	OSD300-4	9	3.0u†	30		180			60 #		900n		300 *	20n#	133p	900n	1.0u	1.7p	AD	♦	PD202a Ø
19	OSD1-3HSA-R	9	5.0n†	80		80	10m	27	65 #		900n		1.0 *	1.0n#		630n	900n	70f	AD		PD386 Ø
20	OSD1-3HSA-R2	9	5.0n†	80		80	10m	27	65 #		900n		1.0 *	1.0n#		630n	900n	70f	AD		PD386 Ø
21	OSD1-3HSA2	9	5.0n†	80		80	10m	27	65 #		900n		1.0 *	1.0n#		630n	900n	70f	AD		PD386 Ø
22	OSD300-2	9	3.0u†	30		60			65 #		630n		300 *	10n#		630n	900n	1.7p	AD	♦	PD202a Ø
23	P2101(1A)	9							75 ⊠		10u	10	4.0 *			8.0u	14u	3.2n		GBØ	PD1091
24	OSD1-3-2	9	5.0n†	30		100	10m	27	75 #		900n		1.0 *	10n#		630n	900n	70f	AD		PD386 Ø
25	OSD1-3R	9	5.0n†	30		100	10m	27	75 #		900n		1.0 *	10n#		630n	900n	70f	AD		PD386 Ø
26	OSD1-3R2	9	5.0n†	30		100	10m	27	75 #		900n		1.0 *	10n#		630n	900n	70f	AD		PD386 Ø
27	OSD5-3-2	9	30n†	30		100	10m	27	75 #		900n		5.0 *	10n#		630n	900n	170f	AD		PD109e Ø
28	OSD5-3R	9	30n†	30		100	10m	27	75 #		900n		5.0 *	10n#		630n	900n	170f	AD		PD109e Ø
29	OSD5-3R2	9	30n†	30		100	10m	27	75 #		900n		5.0 *	10n#		630n	900n	170f	AD		PD109e Ø
30	OSD50-3-2	9	350n†	30		100	10m	27	75 #		900n		50 *	10n#		630n	900n	570f	AD		PD199c Ø
31	OSD50-3R	9	350n†	30		100	10m	27	75 #		900n		50 *	10n#		630n	900n	570f	AD		PD199c Ø
32	OSD50-3R2	9	350n†	30		100	10m	27	75 #		900n		50 *	10n#		630n	900n	570f	AD		PD199c Ø
33	OSD200-3	9	1.8u†	30		100			75 #		900n		200 *	10n#		630n	900n	1.3p	AD	♦	PD202a Ø
34	OSD300-3	9	3.0u†	30		100			75 #		900n		300 *	10n#		630n	900n	1.7p	AD	♦	PD202a Ø
35	RPY96	9						26	130							6.5u	14u	9.0n	XX	KK	PD42aa
36	P2122(A)	9							150 ⊠		10u	10	2.0 *			8.0u	14u	2.5n		GBØ	PD1091
37	802CPY	9	120M*						1.0k⊠							2.0u	25u	1.5n#	XX		PD132 Ø
38	4007	9	1.0G*					26	1.0k⊠				24m	1.0u§		1.0u	4.5u		BS		PD187 Ø
39	OE10-04	9	2.5G*						1.0k⊠		3.8u		24m	1.5u§		1.0u	5.0u		BS		PD160k ⊠
40	4006	9	1.0G*					26	1.3k⊠				13m	1.0u§		1.0u	4.5u		BS		PD187 Ø
41	5065	9	1.0G*					26	1.3k⊠				13m	1.0u§		1.0u	4.5u		BS		PD169d Ø
42	OE10-03	9	2.5G*			250		26	1.3k⊠		3.8u		13m	1.5u§		1.0u	5.0u		BS		PD160j ⊠
43	OE15-53	9	2.5G*			250		26	1.3k⊠		3.7u		13m	1.0u		3.7u	4.0u		BS		PD161a Ø
44	OTC11-84	9	75G*		2.0 †			26	1.5k⊠		4.5u		24m	10u§		1.0u	5.0u		BS	♦	PD214 Ø
45	OTC11-84T	9	75G*		2.0 †			26	1.5k⊠		4.5u		24m	10u§		1.0u	5.0u		BS	♦	PD214 Ø
46	OTC11-84TC	9	75G*		2.0 †			26	1.5k⊠		4.5u		24m	10u§		1.0u	5.0u		BS	♦	PD214 Ø
47	4005(1)	9	1.0G*					26	2.0k⊠				6.2m	1.0u§		1.0u	4.5u		BS		PD187 Ø
48	5055	9	1.0G*					26	2.0k⊠				6.2m	1.0u§		1.0u	4.5u		BS		PD169d Ø
49	OE10-02	9	2.5G*			200		26	2.0k⊠		3.8u		6.2m	1.5u§		1.0u	5.0u		BS		PD160h ⊠
50	OE15-52	9	2.5G*			200		26	2.0k⊠		3.7u		6.2m	1.0u		3.7u	4.0u		BS		PD161a Ø
51	5665	9	7.5G*		2.0	1.0	2.0	X6	2.0k⊠				13m	10u§		1.0u	5.0u		BS		PD162d Ø
52	5667	9	7.5G*		2.0	1.0	2.0	X6	2.0k⊠				13m	10u§		1.0u	5.0u		BS		PD184b Ø
53	OTC11-53	9	7.5G*					26	2.0k⊠		4.1u		13m	10u		4.1u	4.5u		BS		PD162 Ø
54	OTC11-53T	9	7.5G*					26	2.0k⊠		4.1u		13m	10u		4.1u	4.5u		BS		PD162b Ø
55	OTC11-53TC	9	7.5G*					26	2.0k⊠		4.1u		13m	10u		4.1u	4.5u		BS		PD162b Ø
56	62SV	9	60G*		20m				2.0k⊠				55m	175u		300n	3.5u		BH		PD123 Ø
57	OTC11-83	9	75G*		2.0 †			26	2.0k⊠		4.5u		13m	10u§		1.0u	5.0u		BS	♦	PD214 Ø
58	OTC11-83T	9	75G*		2.0 †			26	2.0k⊠		4.5u		13m	10u§		1.0u	5.0u		BS	♦	PD214 Ø
59	OTC11-83TC	9	75G*		2.0 †			26	2.0k⊠		4.5u		13m	10u§		1.0u	5.0u		BS	♦	PD214 Ø
60	OTC12-84	9	13G*		2.0 †			26	2.3k⊠		4.6u		24m	12u§		1.0u	5.0u		BS	♦	PD214 Ø
61	OTC12-84T	9	13G*		2.0 †			26	2.3k⊠		4.6u		24m	12u§		1.0u	5.0u		BS	♦	PD214 Ø
62	OTC12-84TC	9	13G*		2.0 †			26	2.3k⊠		4.6u		24m	12u§		1.0u	5.0u		BS	♦	PD214 Ø
63	OTC12S85T	9	15G*		4.0			26	2.4k⊠		4.6u		38m	15u§		1.0u	5.0u		BS	♦	PD214 Ø
64	OTC12S85TC	9	15G*		4.0			26	2.4k⊠		4.6u		38m	15u§		1.0u	5.0u		BS	♦	PD214 Ø
65	5655	9	7.5G*		2.0	1.0	2.0	X6	3.0k⊠				6.2m	10u§		1.0u	5.0u		BS		PD162d Ø
66	5657(2)	9	7.5G*		2.0	1.0	2.0	X6	3.0k⊠				6.2m	10u§		1.0u	5.0u		BS		PD184b Ø
67	OTC11-52	9	7.5G*					26	3.0k⊠		4.1u		6.2m	10u		4.1u	4.5u		BS		PD162 Ø
68	OTC11-52T	9	7.5G*					26	3.0k⊠		4.1u		6.2m	10u		4.1u	4.5u		BS		PD162a Ø
69	OTC11-52TC	9	7.5G*					26	3.0k⊠		4.1u		6.2m	10u		4.1u	4.5u		BS		PD162b Ø
70	OTC12-53	9	13G*			250		26	3.0k⊠		4.2u		13m	25u§		4.2u	4.6u		BS		PD162b Ø
71	OTC12-53T	9	13G*			250		26	3.0k⊠		4.2u		13m	25u§		4.2u	4.6u		BS		PD162c Ø
72	OTC12-53TC	9	13G*			250		26	3.0k⊠		4.2u		13m	25u§		4.2u	4.6u		BS		PD162c Ø
73	OTC12-83	9	15G*		3.0			26	3.0k⊠		4.6u		13m§	12u§		1.0u	5.0u		BS	♦	PD214 Ø
74	OTC12-83T	9	15G*		3.0			26	3.0k⊠		4.6u		13m§	12u§		1.0u	5.0u		BS	♦	PD214 Ø
75	OTC12-83TC	9	15G*		3.0			26	3.0k⊠		4.6u		13m§	12u§		1.0u	5.0u		BS	♦	PD214 Ø
76	OTC12S84T	9	15G*		4.0			26	3.0k⊠		4.6u		24m	15u§		1.0u	5.0u		BS	♦	PD214 Ø
77	OTC12S84TC	9	15G*		4.0			26	3.0k⊠		4.6u		24m	15u§		1.0u	5.0u		BS	♦	PD214 Ø
78	OTC11-82	9	75G*		2.0 †			26	3.0k⊠		4.5u		6.2m	10u§		1.0u	5.0u		BS	♦	PD214 Ø
79	OTC11-82T	9	75G*		2.0 †			26	3.0k⊠		4.5u		6.2m	10u§		1.0u	5.0u		BS	♦	PD214 Ø
80	OTC11-82TC	9	75G*		2.0 †			26	3.0k⊠		4.5u		6.2m	10u§		1.0u	5.0u		BS	♦	PD214 Ø
81	5765	9	130G*		2.0	1.1	2.0	26	3.0k⊠				13m	25u§		1.0u	5.0u		BS		PD162e Ø
82	5767	9	130G*		2.0	1.1	2.0	26	3.0k⊠				13m	25u§		1.0u	5.0u		BS		PD184a Ø
83	RPY31	9	40G*					55%	3.8k†⊠		5.3u		24m	5.0u§		1.0u	5.6u	10p	BH		PD122a Ø
84	RPY35	9	40G*					55%	3.8k†⊠		5.3u		55m	5.0u§		1.0u	5.6u	10p	BH		PD130 Ø
85	1620(2)	9				7.5			4.0k⊠	J			34m	500u		1.0u	3.0u		BH		PD183 Ø
86	1620BB	9				7.5			4.0k⊠	J			34m	500u		1.0u	3.0u		BH		PD183a Ø
87	1620M	9				7.5			4.0k⊠	J			34m	500u		1.0u	3.0u		BH		PD183b Ø
88	1620MF	9				7.5			4.0k⊠	J			34m	500u		1.0u	3.0u		BH		PD183c Ø
89	4003	9	1.0G*					26	4.0k⊠				1.5m	1.0u§		1.0u	4.5u		BS		PD187 Ø
90	5035	9	1.0G*					26	4.0k⊠				1.5m	1.0u§		1.0u	4.5u		BS		PD169d Ø
91	OE10-01	9	2.5G*			125		26	4.0k⊠		3.8u		1.5m	1.5u§		1.0u	5.0u		BS		PD160g ⊠
92	OE15-51	9	2.5G*			125		26	4.0k⊠		3.7u		1.5m	1.0u		3.7u	4.0u		BS		PD161a Ø
93	OE15-181	9	2.5G*			125		26	4.0k⊠		3.7u		1.5m	1.0u		3.7u	4.0u		BS		PD161 Ø
94	OTC12S83T	9	15G*		4.0			26	4.0k⊠		4.6u		13m	15u§		1.0u	5.0u		BS	♦	PD214 Ø
95	OTC12S83TC	9	15G*		4.0			26	4.0k⊠		4.6u		13m	15u§		1.0u	5.0u		BS	♦	PD214 Ø
96	OTC12-52	9	13G*			200		26	4.5k⊠		4.2u		6.2m	25u§		4.2u	4.6u		BS		PD162b Ø
97	OTC12-52T	9	13G*			200		26	4.5k⊠		4.2u		6.2m	25u§		4.2u	4.6u		BS		PD162c Ø
98	OTC12-52TC	9	13G*			200		26	4.5k⊠		4.2u		6.2m	25u§		4.2u	4.6u		BS		PD162c Ø
99	OTC12-82	9	15G*		3.0			26	4.5k⊠		4.6u		6.2m	12u§		1.0u	5.0u		BS	♦	PD214 Ø
100	OTC12-82T	9	15G*		3.0			26	4.5k⊠		4.6u		6.2m	12u§		1.0u	5.0u		BS	♦	PD214 Ø
101	OTC12-82TC	9	15G*		3.0			26	4.5k⊠		4.6u		6.2m	12u§		1.0u	5.0u		BS	♦	PD214 Ø
102	5755	9	130G*		2.0	1.1	2.0	26	4.5k⊠				6.2m	25u§		1.0u	5.0u		BS		PD162e Ø
103	5757	9	130G*		2.0	1.1	2.0	26	4.5k⊠				6.2m	25u§		1.0u	5.0u		BS		PD184a Ø
104	5635	9	7.5G*		2.0	1.0	2.0	X6	6.0k⊠				1.5m	10u§		1.0u	5.0u		BS		PD162d Ø
105	5637	9	7.5G*		2.0	1.0	2.0	X6	6.0k⊠				1.5m	10u§		1.0u	5.0u		BS		PD184b Ø
106	OTC11-51	9	7.5G*					26	6.0k⊠		4.1u		1.5m	10u		4.1u	4.5u		BS		PD162 Ø
107	OTC11-51T	9	7.5G*					26	6.0k⊠		4.1u		1.5m	10u		4.1u	4.5u		BS		PD162a Ø
108	OTC11-51TC	9	7.5G*					26	6.0k⊠		4.1u		1.5m	10u		4.1u	4.5u		BS		PD162a Ø
109	OTC11-81	9	75G*		2.0 †			26	6.0k⊠		4.5u		1.5m	10u§		1.0u	5.0u		BS	♦	PD214 Ø
110	OTC11-81T	9	75G*		2.0 †			26	6.0k⊠		4.5u		1.5m	10u§		1.0u	5.0u		BS	♦	PD214 Ø

SYMBOLS AND CODES
EXPLAINED IN INTERPRETER

10. PHOTODIODES - Infrared-Optimized (Cont'd)

IN ORDER OF: (1)TYPE (2) RESPONSIVITY (3) MAX DARK CURRENT & (4) TYPE NUMBER

LINE No.	4 TYPE NUMBER	1 TYPE	3 MAX DARK CURR @ 25°C ID (A)	VR TEST (V)	MAX RATINGS @ 25°C PD (W)	VR (V)	IF (A)	TEMP RNG. CODE - +	2 MINIMUM RESPONSIVITY Re (A/W)	SOUR -CE	λ (m)	VR (V)	ACTIVE AREA Sq In	RESP. TIME (s)	CAPAC C (F)	SPECTRAL RANGE LOW λL (m)	HIGH λH (m)	NOISE EQ.PWR Pn Watt/ Hz1/2	MTL	LEAD CODE	DRAWING
1	OTC11-81TC	9	75G*		2.0 †			26	6.0kØ		4.5u		1.5m	10u§		1.0u	5.0u		BS	♦	PD214 Ø
2	OTC12S82T	9	15G*		4.0			26	6.5kØ		4.6u		6.2m	15u§		1.0u	5.0u		BS	♦	PD214 Ø
3	OTC12S82TC	9	15G*		4.0			26	6.5kØ		4.6u		6.2m	15u§		1.0u	5.0u		BS	♦	PD214 Ø
4	OE4M	9	30G*					05	7.0kØ				7.5u	250n		10u	11u		CG		PD159 Ø
5	OTC12-51	9	13G*			125		26	9.0kØ		4.2u		1.5m	25u§		4.2u	4.6u		BS		PD162b Ø
6	OTC12-51T	9	13G*			125		26	9.0kØ		4.2u		1.5m	25u§		4.2u	4.6u		BS		PD162c Ø
7	OTC12-51TC	9	13G*			125		26	9.0kØ		4.2u		1.5m	25u§		4.2u	4.6u		BS		PD162c Ø
8	OTC12-81	9	15G*		3.0			26	9.0kØ		4.6u		1.5m	12u§		1.0u	5.0u		BS	♦	PD214 Ø
9	OTC12-81T	9	15G*		3.0			26	9.0kØ		4.6u		1.5m	12u§		1.0u	5.0u		BS	♦	PD214 Ø
10	OTC12-81TC	9	15G*		3.0			26	9.0kØ		4.6u		1.5m	12u§		1.0u	5.0u		BS	♦	PD214 Ø
11	59-5737	9	50G*		2.0	1.1	2.0	X6	9.0kØ				1.5m	25u§		1.0u	5.5u		BS		PD184a Ø
12	5735	9	130G*		2.0	1.1	2.0	26	9.0kØ				1.5m	25u§		1.0u	5.0u		BS		PD162e Ø
13	5737	9	130G*		2.0	1.1	2.0	26	9.0kØ				1.5m	25u§		1.0u	5.0u		BS		PD184a Ø
14	OTC12S81T	9	15G*		4.0			26	12kØ		4.6u		1.5m			1.0u	5.0u		BS		PD214 Ø
15	OTC12S81TC	9	15G*		4.0			26	12kØ		4.6u		1.5m			1.0u	5.0u		BS		PD214 Ø
16	ORP13	9	55G*					57	35kØ		5.3u		4.6m	5.0u		1.5u	5.6u	3.2p	BG		PD122 Ø
17	RPY51	9	90G*					55%	45kØ		5.3u		387u	2.5u§		1.5u	5.6u	2.5p	BH		PD130 Ø
18	KO25-53	9	90G*			250		26	60kØ		2.0u		13m	350u§		2.0u	2.2u		BH		PD161a Ø
19	OE20-03	9	100G*			250		26	60kØ		2.2u		13m	350u§		2.2u	2.4u		BH		PD160b Ø
20	OE25-53	9	100G*			250		26	60kØ		2.2u		13m	350u		2.2u	2.4u		BH		PD161a Ø
21	61SV	9	40G*					56	80kØ		2.2u		55m	100u		3.0u	5.0u	15p	BH		PD123 Ø
22	2665	9	100G*		2.0	1.0	2.0	26	80k				13m	500u§		1.0u	3.2u		BH		PD162f Ø
23	2667	9	100G*		2.0	1.0	2.0	26	80k				13m	500u§		1.0u	3.2u		BH		PD184b Ø
24	KO25-52	9	90G*			200		26	100kØ		2.0u		6.2m	350u§		2.0u	2.2u		BH		PD161a Ø
25	OE20-02	9	100G*			200		26	100kØ		2.2u		6.2m	350u§		2.2u	2.4u		BH		PD160a Ø
26	OE25-52	9	100G*			200		26	100kØ		2.2u		6.2m	350u		2.2u	2.4u		BH		PD161a Ø
27	OTC21-84	9	150G*		2.0 †			26	100kØ		2.5u		24m	1.0m§		1.0u	3.5u		BH	♦	PD214 Ø
28	OTC21-84T	9	150G*		2.0 †			26	100kØ		2.5u		24m	1.0m§		1.0u	3.5u		BH	♦	PD214 Ø
29	OTC21-84TC	9	150G*		2.0 †			26	100kØ		2.5u		24m	1.0m§		1.0u	3.5u		BH	♦	PD214 Ø
30	2765	9	150G*		2.2	1.1	2.0	36	120k				13m	700u§		1.0u	3.4u		BH		PD162f Ø
31	2767	9	150G*		2.2	1.1	2.0	36	120k				13m	700u§		1.0u	3.4u		BH		PD184b Ø
32	OTC21-53	9	150G*			250		26	150kØ		2.3u		13m	1.0m		2.3u	2.5u		BH		PD162 Ø
33	OTC21-53T	9	150G*			250		26	150kØ		2.3u		13m	1.0m		2.3u	2.5u		BH		PD162a Ø
34	OTC21-53TC	9	150G*			250		26	150kØ		2.3u		13m	1.0m		2.3u	2.5u		BH		PD162a Ø
35	OTC21-83	9	150G*		2.0 †			26	150kØ		2.5u		13m	1.0m§		1.0u	3.5u		BH	♦	PD214 Ø
36	OTC21-83T	9	150G*		2.0 †			26	150kØ		2.5u		13m	1.0m§		1.0u	3.5u		BH	♦	PD214 Ø
37	OTC21-83TC	9	150G*		2.0 †			26	150kØ		2.5u		13m	1.0m§		1.0u	3.5u		BH	♦	PD214 Ø
38	OTC22-84	9	250G*		2.0 †			26	150kØ		2.6u		24m	1.0m§		1.0u	3.5u		BH	♦	PD214 Ø
39	OTC22-84T	9	250G*		2.0 †			26	150kØ		2.6u		24m	1.0m§		1.0u	3.5u		BH	♦	PD214 Ø
40	OTC22-84TC	9	250G*		2.0 †			26	150kØ		2.6u		24m	1.0m§		1.0u	3.5u		BH	♦	PD214 Ø
41	OTC22S85T	9	300G*		4.0			X6	150kØ		2.7u		38m			1.0u	3.5u		BH		PD214 Ø
42	OTC22S85TC	9	300G*		4.0			X6	150kØ		2.7u		38m			1.0u	3.5u		BH		PD214 Ø
43	OTC22S84T	9	300G*		4.0			X6	190kØ		2.7u		24m			1.0u	3.5u		BH		PD214 Ø
44	OTC22S84TC	9	300G*		4.0			X6	190kØ		2.7u		24m			1.0u	3.5u		BH		PD214 Ø
45	825CPY	9	600M*			9.0		14$	200kØ				4.6m			2.0u	25u	30n#	XX		PD134 Ø
46	KO25-51	9	90G*			125		26	200kØ		2.0u		1.5m	350u§		2.0u	2.2u		BH		PD161a Ø
47	KO25-181	9	90G*			125		26	200kØ		2.0u		1.5m	350u§		2.0u	2.2u		BH		PD161 Ø
48	2655	9	100G*		2.0	1.0	2.0	26	200kØ				6.2m	500u§		1.0u	3.2u		BH		PD162d Ø
49	2657	9	100G*		2.0	1.0	2.0	26	200kØ				6.2m	500u§		1.0u	3.2u		BH		PD184 Ø
50	OE20-01	9	100G*			125		26	200kØ		2.2u		1.5m	350u§		2.2u	2.4u		BH		PD160 Ø
51	OE25-51	9	100G*			125		26	200kØ		2.2u		1.5m	350u		2.2u	2.4u		BH		PD161a Ø
52	OE25-181	9	100G*			125		26	200kØ		2.2u		1.5m	350u		2.2u	2.4u		BH		PD161 Ø
53	OTC21-52	9	150G*			200		26	200kØ		2.3u		6.2m	1.0m		2.3u	2.5u		BH		PD162 Ø
54	OTC21-52T	9	150G*			200		26	200kØ		2.3u		6.2m	1.0m		2.3u	2.5u		BH		PD162a Ø
55	OTC21-52TC	9	150G*			200		26	200kØ		2.3u		6.2m	1.0m		2.3u	2.5u		BH		PD162a Ø
56	OTC21-82	9	150G*		2.0 †			26	200kØ		2.5u		6.2m	1.0m§		1.0u	3.5u		BH	♦	PD214 Ø
57	OTC21-82T	9	150G*		2.0 †			26	200kØ		2.5u		6.2m	1.0m§		1.0u	3.5u		BH	♦	PD214 Ø
58	OTC21-82TC	9	150G*		2.0 †			26	200kØ		2.5u		6.2m	1.0m§		1.0u	3.5u		BH	♦	PD214 Ø
59	OTC22-53	9	250G*			250		26	200kØ		2.4u		13m	1.0m		2.4u	2.6u		BH		PD162b Ø
60	OTC22-53T	9	250G*			250		26	200kØ		2.4u		13m	1.0m		2.4u	2.6u		BH		PD162c Ø
61	OTC22-53TC	9	250G*			250		26	200kØ		2.4u		13m	1.0m		2.4u	2.6u		BH		PD162c Ø
62	OTC22-83	9	300G*		3.0			26	200kØ		2.6u		13m	1.0m§		1.0u	2.5u		BH	♦	PD214 Ø
63	OTC22-83T	9	300G*		3.0			26	200kØ		2.6u		13m	1.0m§		1.0u	3.5u		BH	♦	PD214 Ø
64	OTC22-83TC	9	300G*		3.0			26	200kØ		2.6u		13m	1.0m§		2.5u	3.5u		BH	♦	PD214 Ø
65	OTC22S83T	9	300G*		4.0			X6	250kØ		2.7u		13m			1.0u	3.5u		BH		PD214 Ø
66	OTC22S83TC	9	300G*		4.0			X6	250kØ		2.7u		13m			1.0u	3.5u		BH		PD214 Ø
67	1319(2)	9				22			300kØ	J			376u	200u		1.0u	3.0u		BH		PD183 Ø
68	1319BB	9				22			300kØ	J			376u	200u		1.0u	3.0u		BH		PD183a Ø
69	1319M	9				22			300kØ	J			376u	200u		1.0u	3.0u		BH		PD183b Ø
70	1319MF	9				22			300kØ	J			376u	200u		1.0u	3.0u		BH		PD183c Ø
71	2755	9	150G*		2.2	1.1	2.0	26	300kØ				6.2m	700u§		1.0u	3.4u		BH		PD162d Ø
72	2757	9	150G*		2.2	1.1	2.0	26	300kØ				6.2m	700u§		1.0u	3.4u		BH		PD184 Ø
73	OTC22-52	9	250G*			200		26	300kØ		2.4u		6.2m	1.0m		2.4u	2.6u		BH		PD162b Ø
74	OTC22-52T	9	250G*			200		26	300kØ		2.4u		6.2m	1.0m		2.4u	2.6u		BH		PD162c Ø
75	OTC22-52TC	9	250G*			200		26	300kØ		2.4u		6.2m	1.0m		2.4u	2.6u		BH		PD162c Ø
76	OTC22-82	9	300G*		3.0			26	300kØ		2.6u		6.2m	1.0m§		1.0u	3.5u		BH	♦	PD214 Ø
77	OTC22-82T	9	300G*		3.0			26	300kØ		2.6u		6.2m	1.0m§		1.0u	3.5u		BH	♦	PD214 Ø
78	OTC22-82TC	9	300G*		3.0			26	300kØ		2.6u		6.2m	1.0m§		1.0u	3.5u		BH	♦	PD214 Ø
79	OTC22S82T	9	300G*		4.0			X6	370kØ		2.7u		6.2m			1.0u	3.5u		BH		PD214 Ø
80	OTC22S82TC	9	300G*		4.0			X6	370kØ		2.7u		6.2m			1.0u	3.5u		BH		PD214 Ø
81	2635	9	100G*		2.0	1.0	2.0	26	400kØ				1.5m	500u§		1.0u	3.2u		BH		PD162d Ø
82	2637	9	100G*		2.0	1.0	2.0	26	400kØ				1.5m	500u§		1.0u	3.2u		BH		PD184 Ø
83	OTC21-51	9	150G*			125		26	400kØ		2.3u		1.3m	1.0m		2.3u	2.5u		BH		PD162 Ø
84	OTC21-51T	9	150G*			125		26	400kØ		2.3u		1.3m	1.0m		2.3u	2.5u		BH		PD162a Ø
85	OTC21-51TC	9	150G*			125		26	400kØ		2.3u		1.3m	1.0m		2.3u	2.5u		BH		PD162a Ø
86	OTC21-81	9	150G*		2.0 †			26	400kØ		2.5u		1.5m	1.0m§		1.0u	3.5u		BH	♦	PD214 Ø
87	OTC21-81T	9	150G*		2.0 †			26	400kØ		2.5u		1.5m	1.0m§		1.0u	3.5u		BH	♦	PD214 Ø
88	OTC21-81TC	9	150G*		2.0 †			26	400kØ		2.5u		1.5m	1.0m§		1.0u	3.5u		BH	♦	PD214 Ø
89	2735	9	150G*		2.2	1.1	2.0	26	600kØ				1.5m	700u§		1.0u	3.4u		BH		PD162d Ø
90	2737	9	150G*		2.2	1.1	2.0	26	600kØ				1.5m	700u§		1.0u	3.4u		BH		PD184 Ø
91	OTC22-51	9	250G*			125		26	600kØ		2.4u		1.3m	1.0m		2.4u	2.6u		BH		PD162b Ø
92	OTC22-51T	9	250G*			125		26	600kØ		2.4u		1.3m	1.0m		2.4u	2.6u		BH		PD162c Ø
93	OTC22-51TC	9	250G*			125		26	600kØ		2.4u		1.3m	1.0m		2.4u	2.6u		BH		PD162c Ø
94	OTC22-81	9	300G*		3.0			26	600kØ		2.6u		1.5m	1.0m§		1.0u	3.5u		BH	♦	PD214 Ø
95	OTC22-81T	9	300G*		3.0			26	600kØ		2.6u		1.5m	1.0m§		1.0u	3.5u		BH	♦	PD214 Ø
96	OTC22-81TC	9	300G*		3.0			26	600kØ		2.6u		1.5m	1.0m§		1.0u	3.5u		BH	♦	PD214 Ø
97	OTC22S81T	9	300G*		4.0			X6	750kØ		2.7u		1.5m			1.0u	3.5u		BH		PD214 Ø
98	OTC22S81TC	9	300G*		4.0			X6	750kØ		2.7u		1.5m			1.0u	3.5u		BH		PD214 Ø
99	KP20-01	9	30G*					26	1.0M†Ø		2.1u			200u§		2.1u	2.3u		BH		PD160 Ø
100	KP20-02	9	30G*					26	1.0M†Ø		2.1u			200u§		2.1u	2.3u		BH		PD160a Ø
101	KP20-03	9	30G*					26	1.0M†Ø		2.1u			200u§		2.1u	2.3u		BH		PD160b Ø
102	KQ20-01	9	75G*					26	1.0M†Ø		2.0u			300u§		2.0u	2.2u		BH		PD160d Ø
103	KQ20-02	9	75G*					26	1.0M†Ø		2.0u			300u§		2.0u	2.2u		BH		PD160e Ø
104	KQ20-03	9	75G*					26	1.0M†Ø		2.0u			300u§		2.0u	2.2u		BH		PD160f Ø
105	KO20-01	9	90G*					26	1.0M†Ø		2.0u		1.5m	350u§		2.0u	2.2u		BH		PD160 Ø
106	KO20-02	9	90G*					26	1.0M†Ø		2.0u		6.2m	350u§		2.0u	2.2u		BH		PD160a Ø
107	KO20-03	9	90G*					26	1.0M†Ø		2.0u		13m	350u§		2.0u	2.2u		BH		PD160b Ø

PHOTODIODE, ULTRAVIOLET-OPTIMIZED

Continued on Next Page

SYMBOLS AND CODES EXPLAINED IN INTERPRETER

10. PHOTODIODES - Ultraviolet-Optimized

IN ORDER OF: (1)TYPE (2) RESPONSIVITY
(3) MAX DARK CURRENT & (4) TYPE NUMBER

LINE No.	4 TYPE NUMBER	1 TYPE	3 MAX DARK CURR @ 25°C ID (A)	VR TEST (V)	MAX RATINGS @ 25°C PD (W)	VR (V)	IF (A)	TEMP RNG. CODE - +	2 MINIMUM RESPONSIVITY Re (A/W)	SOUR -CE	λ (m)	VR (V)	ACTIVE AREA Sq In	RESP. TIME (s)	CAPAC C (F)	SPECTRAL RANGE LOW λL (m)	HIGH λH (m)	NOISE EQ.PWR Pn Watt/ Hz1/2	MTL	LEAD CODE	DRAWING
1	UV040BQ	10							80m		200n		.81 *		25p	185	1.1u	10f	AD	A	TO-5
2	UV100BQ	10							80m		200n		5.1 *		150p	185	1.1u	25f	AD	A	TO-5
3	UV140BQ2	10							80m		200n		3.2 *		100p	185n	1.1u	25f	AD		TO-5
4	UV140BQ4	10							80m		200n		1.6 *		50p	185n	1.1u	25f	AD		TO-5
5	UV215BQ	10							80m		200n		23 *		700p	185	1.1u	30f	AD	A	TO-8
6	UV250BQ	10							80m		200n		21 *		630p	185	1.1u	28f	AD	A	TO-5
7	UV360BQ	10							80m		254n		36 *		1.1n	185n	1.1u	43f	AD		TO-8
8	UV444BQ	10							80m		200n		100 *		2.8n	185	1.1u	62f	AD	A	PD169c Ø
9	OSD1-1	10	5.0n†	30		10	10m	27	80m†		250n		1.0 *	20n#		250n	430n	70f	AD		PD14h
10	OSD5-1	10	30n†	30		10	10m	27	80m†		250n		5.0 *	20n#		250n	430n	170f	AD		PD109e Ø
11	OSD50-1	10	350n†	30		10			80m†		250n		50 *	20n#		250n	430n	570f	AD	♦	PD199b Ø
12	OSD100-1	10	800n	10		10	10m	27	80m†		250n	10	100 *	20n	150p	200n	1.0u		AD	A	None
13	VTB5051UV	10	250p			40 †		57	.10 †	C	220n		14 *			200n	1.1k		XX		TO-5
14	VTB6061UV	10	2.0k			40 †		57	.10 †	C	220n		37 *			200n	1.1k		XX		TO-8
15	UV040BG	10							140m		254n		.81 *		25p	250n	1.1u	10f	AD		TO-5
16	UV100BG	10							140m		254n		5.1 *		150p	250n	1.1u	25f	AD		TO-5
17	UV215BG	10							140m		254n		23 *		700p	250n	1.1u	30f	AD		TO-8
18	UV250BG	10							140m		254n		21 *		630p	250n	1.1u	28f	AD		TO-5
19	UV360BG	10							140m		254n		36 *		1.1n	250n	1.1u	43f	AD		TO-8
20	SD100-13-13-022	10	.75n†	5.0			.42m	2 ♦	.50 †				5.1 *	75n	510p				XX		PD42u
21	SD172-13-13-022	10	2.0n†	5.0			.94m	2 ♦	.50 †				15 *	207n	1.5n				XX		PD42u
22	SD200-13-13-042	10	3.0n†	5.0			1.1m	2 ♦	.50 †				20 *	280n	2.0n				XX		PD1063
23	SD290-13-13-042	10	3.0n†	1.0			1.5m	2 ♦	.50 †				42 *	475n	4.2n				XX		PD1063a
24	OSD60-1	10				10	10m	27	15 #	B	250n	10	94m	2.0n		200n	1.1u		AD	A	None
25	OSD15-1	10	60n	10		10	10m	27	15 #	B	250n	10	24m	20n		200n	1.0u		AD	A	None
26	OSD1-1-2	10	5.0n†	30		10	10m	27	35 #		430n		1.0 *	20n#		250n	430n	70f	AD		PD386 Ø
27	OSD1-1R	10	5.0n†	30		10	10m	27	35 #		430n		1.0 *	20n#		250n	430n	70f	AD		PD386 Ø
28	OSD1-1R2	10	5.0n†	30		10	10m	27	35 #		430n		1.0 *	20n#		250n	430n	70f	AD		PD386 Ø
29	OSD5-1-2	10	30n†	30		10	10m	27	35 #		430n		5.0 *	20n#		250n	430n	170f	AD		PD109e Ø
30	OSD5-1R	10	30n†	30		10	10m	27	35 #		430n		5.0 *	20n#		250n	430n	170f	AD		PD109e Ø
31	OSD5-1R2	10	30n†	30		10	10m	27	35 #		430n		5.0 *	20n#		250n	430n	170f	AD		PD109e Ø
32	OSD50-1-2	10	350n†	30		10	10m	27	35 #		430n		50 *	20n#		250n	430n	570f	AD		PD199c Ø
33	OSD50-1R	10	350n†	30		10	10m	27	35 #		430n		50 *	20n#		250n	430n	570f	AD		PD199c Ø
34	OSD50-1R2	10	350n†	30		10	10m	27	35 #		430n		50 *	20n#		250n	430n	570f	AD		PD199c Ø
35	OSD200-1	10	1.8u†	30		10			35 #		430n		200 *	20n#		250n	430n	1.3p	AD	♦	PD202a Ø

Need applications help?
Try D.A.T.A.'s
APPLICATION NOTES
REFERENCE.

SYMBOLS AND CODES
EXPLAINED IN INTERPRETER

11. PHOTOTRANSISTORS - N-Channel PhotoJFET

IN ORDER OF: (1) TYPE (2) LIGHT CURRENT (3) Ee TEST & (4) TYPE NUMBER

LINE No.	TYPE NUMBER	MAX. RATINGS @25°C PD (W)	VCEO (V)	IC (A)	TEMP RNG. CODE - +	MAX. DARK CURR. ID (A)	VCE (V)	MIN. LIGHT CURR. IL (A)	--TEST CONDITIONS- Ee (W/cm2)	SRC	λ (m)	VCE (V)	RESP. TIME (s)	PEAK WAVE-LNTH. λp (m)	MAX SATURATION VOTLAGE VCE (SAT) (V)	IC TEST (A)	Ee TEST W/cm2	MAT	TYPE CODE	LEAD CODE	DRAWING
PHOTOJFET, N-CHANNEL																					
4	P102	300m	30		6MØ								1.5u*					AD	JFET	GH	TO-18
5	FF102♦	400m	15		6M§	5.0m	10	15u†	1.0 *	F		10	30n#					AD	JFET	GJ	PT9c Ø
6	FF108♦	400m	15		6M§	5.0m	10	15u†	1.0 *	F		10	30n#					AD	JFET	GJ	PT46b Ø
7	FF409♦	300m	30		6M§	5.0m	15	144u†	1.0 *	F		15	25n		100m	1.3m		AD	JFET	GG	PT2r Ø
8	FF411♦	300m	30		6M§	5.0m	15	144u†	1.0 *	F		15	25n		100m	1.3m		AD	JFET	GG	PT18h Ø
9	FF412♦	300m	30		6M§	5.0m	15	144u†	1.0 *	F		15	25n#		100m	1.0m		AD	JFET	GG	PT2r Ø
10	FF413♦	300m	30		6M§	5.0m	15	144u†	1.0 *	F		15	25n#		100m	1.0m		AD	JFET	GG	PT18h Ø
11	FF600♦	300m	15		6M§	8.0m	10	800u†	1.0 *	F		10	30n					AD	JFET	GJ	PT9c Ø
12	FF617♦	300m	15		6M§	8.0m	10	800u†	1.0 *	F		10	30n					AD	JFET	GJ	PT46b Ø
13	FF626♦	400m	15		6M§	8.0m	10	800u†	1.0 *	F		10	30n#					AD	JFET	GJ	PT9c Ø
14	FF627♦	400m	15		6M§	8.0m	10	800u†	1.0 *	F		10	30n#					AD	JFET	GJ	PT46b Ø
PHOTOTRANSISTOR, NPN																					
18	P30011				05									910n					NPN		PS384
19	P30013				05									910n					NPN		PS384
20	SPX1878-4	210m		30m	6A	1.0u	10						10u						NPN		None
21	P32011		20		05									910n					NPN		PS388
22	P32013		20		05									910n					NPN		PS388
23	P56001		20		05									910n					NPN		PS376
24	P56101		20		05									910n					NPN		PS376
25	P56201		20		05									910n					NPN		PS376
26	PN150	100m	20	20m	27	10n†	10						3.0u#	800n	200m†	1.0m	1.0 $	AD	NPN	AC	PT72 Ø
27	PT351	50m	20	0.8	2A									800n	5.0 †		10m		NPN		None Ø
28	BPX95C	100m	30	25m	A §	100n	20							800n	400m	2.0m	1.0m	AD	NPN		PD56c
29	GFOD1A2	150m	30	100m	58	100n	10						8.0u					AD	NPN	AB	PT115
30	LTR206	100m	30		5A	100n	10						5.0u		400m	500u	20m	AD	NPN	♦	PD1213b
31	LTR206C	100m	30		5A	100n	10						5.0u		400m	500u	20m	AD	NPN	♦	PD1213b
32	LTR209	100m	30		5A	100n	10						5.0u		400m	500u	20m	AD	NPN	♦	PD1210g
33	LTR301	100m	30		5A	100n	10						5.0u		400m	500u	20m	AD	NPN	♦	PD1282a
34	LTR4208	100m	30		5A	100n	10						5.0u		400m	500u	20m	AD	NPN	♦	PD1211a
35	MFOD72	150m	30	10m	48	100n	10				820n	5.0	60u	820n	400m	1.0m		AD	NPN	B	PT129
36	P31011		30		05									910n					NPN		PS387
37	P31013		30		05									910n					NPN		PS387
38	P34021		30		05									910n					NPN		PS387a
39	P34023		30		05									910n					NPN		PS387a
40	PN101	150m	30	50m	3C	5.0n†	10						3.0u#	800n	200m†	1.0m	500m$	AD	NPN	AA	PT14a
41	PN102	150m	30	50m	3C	5.0n†	10						3.0u#	800n	200m†	1.0m	500m$	AD	NPN	AD	PT2g Ø
42	PT430(1)	75m	35	1.5	28									800n	5.0 †		1.0m		NPN		None ☑
43	PT430F	75m	35	.25	28									860n	5.0 †		1.0m		NPN		None ☑
44	PT431	75m	35	2.0	28									800n	2.0 †		0.1m		NPN		None ☑
45	PT431F	75m	35	1.3	28									860n	2.0 †		0.1m		NPN		None ☑
46	S2041	75m	35	600u	2A	50n	10						2.0u#	640n					NPN		PT2ad
47	S2042	75m	35	14m	2A	50n	10						2.0u#	640n					NPN		PT14b
48	S2043	50m	35	1.0m	2A	50n	10						2.0u#	760n					NPN		PD118d
49	TEYT5500	100m	70	100m	5A%	200n	20	400n	1.0m		650n	5.0	3.0u	830n	300m	100u	1.0m	AD	NPN		PD1385
50	PN103	150m	40	50m	28	2.0n†	10	800n	100 $	C		10	1.5u	800n	200m†	1.0	1.0 $	AD	NPN	AB	None
51	2SC2072-1	150m	25	100m	28§	1.5n	10	2.0u	50 $			10						AD	NPN	♦	PT93
52	2SC2072-2	150m	25	100m	28§	1.5n	10	3.0u	50 $			10						AD	NPN	♦	PT93
53	MEL31	300m	30	50m	58§	50n	5.0	10u	2.0m			5.0	4.0u#	800n	350m	500u	2.0m	AD	NPN		PT56b Ø
54	ZMP31	100m	35	25m	48	25n	10	13u		C		10	2u	800n					NPN	AA	None Ø
55	ZMP51	200m	35	25m	48	25n	10	13u		C		10	2u	800n					NPN	AA	None Ø
56	PH104	100m	30	40m	XA§	100n	10	20u	100 $	C		2.0		780n	300m	500u	1.0k$		NPN	AB	PT151
57	MEL32	300m	40	50m	58§	50n	5.0	30u	2.0m			5.0	4.0u#	800n	350m	500u	2.0m	AD	NPN		PT56b Ø
58	VTM7121	50m			8 ♦	100m	10	.05m				5.0	3.0u		0.4	.05m		AD	NPN		PT113
59	108-3	125m	30	25m		.10u	15	50u				15 *	5.0u#					AD	NPN		PS244g
60	PH102	100m	30	40m	38%	200n	10	50u	100 $	C		2.0	5.0u		300m	500u	1.0k$		NPN	AA	PT60a Ø
61	BP103-II	300m	50	100m	48%	100n	30	63u	0.5m	A	950n	5.0 *	5u#	850n	160m	2.5m	5.0m	AD	NPN	AD	PT34b Ø
62	VTT1020	250m	50	50m	6M	500p†	20	75u	5.0m			5.0	1.0u#	775n	150m†	1.0m	20m		NPN	AD	PT18
63	VTT9320	100m	50	25m	5A	1.0n†	20	75u	5.0m	C		5.0	1.0u#	775n	150m†	1.0m	20m		NPN	AA	PT13 Ø
64	MII68000(A)		40			50n	10	80u	1.0m	E		5.0 *	3.0u#	825n				AD	NPN		PT144
65	MRD701	150m	30		4A§	100n	10	100u	500u			5.0	10u		400m			Si	NPN	AB	PD1024
66	SFH317F(A)	200m	35	50m	5A%	2.0n	10	100u	500u	A	950n	5.0	15u#	900n	130m†	30u	500u	AD	NPN		PT1 Ø
67	LPT80(A)	100m	50	50m	4A			100u	500u	C		5.0	20u#	870n				AD	NPN	AA	PD1141 ☑
68	SDP8407	100m	30		4C	100n	10	100u	1.0m		935n	5.0			400m	10u	1.0m	AD	NPN	AK	PT152
69	MII68003(A)		40			50n	10	100u	1.0m	E		5.0 *	4.0u#	825n				AD	NPN		PT147
70	MRD3050	400m	30		6M§	100n	20	100u	5.0m	E		20 *	2.0u#	800n				AD	NPN	ADØ	PT2 Ø
71	CLCT367		35			25n	10	100u	5.0m	C		5.0	1.5u#		500m	1.0m			NPN	♦	PT156 ☑
72	SDP8407-001				48	100n	10	100u	1.0	A	935n	5.0	14u#		400m†	10u	1.0m	AD	NPN	AA♦	PT152 ☑
73	PH106	100m	30	40m	XA§	100n	10	100u	100 $	C		2.0	5u*	780n	.3	.5m	1k$		NPN	AA	PT89c
74	STSKL	75m	40	20m	3C	100n	10	100u	1.0k$	C	500n	5.0	3.2u#	880n	0.4	200u	4.0k$	AD	NPN	ABØ	PD25h
75	MII68001(A)		30			100n	10	120u	1.0m	E		5.0 *	5.0u#	825n				AD	NPN		PT145
76	SDP8406-001	100m	30		48	100u	15	150u	1.0m	A	935n	5.0	8.0u#	880n	400m†	400u	1.0m	AD	NPN	AA♦	PT89 ☑
77	SDP8426-001	100m	30		48	100u	30	150u	1.0m	A	935n	5.0	8.0u#	880n	400m	400u	1.0m	AD	NPN	AA♦	PT89 ☑
78	BPW39A	150m	32	100m	28%	100n	20	150u	1.0m		950n	5.0	1.6u#	780n	3.0	0.1m	5.0m		NPN	AA	PT124
79	VTT1021	250m	50	50m	6M	500p†	20	150u	5.0m			5.0	2.0u#	775n	150m†	1.0m	20m		NPN	AD	PT18
80	VTT9321	100m	50	25m	5A	1.0n†	20	150u	5.0m	C		5.0	2.0u#	775n	150m†	1.0m	20m		NPN	AA	PT13 Ø
81	SDP8405-011	60m	30		48	100u	15	160u	250u	A	935n	5.0	8.0u#	880n	300m†	400u	20m	AD	NPN	AA♦	PT31c Ø
82	SDP8405-012	60m	30		48	100u	15	160u	250u	A	935n	5.0	9.0u#	880n	300m†	400u	20m	AD	NPN	AA♦	PT31c Ø
83	SDP8405-12	60m	30		4C	100u	15	.16m	.25m	A	935n	5.0	9.0u#	880n	300m	400u		AD	NPN	AA	PT31c
84	OP509SLD	80m	30		48	100n	10	.17m	1.0m	E		5.0			0.4	250u	5.0m	Si	NPN	AB	PD611
85	PN121S	50m	20	10m	28	1.0n†	10	180u†	1.0k$			10	1.0u#	800n				AD	NPN	AB	PT47a Ø
86	CLR2049	250m	40			100n	10	200u	200u	C		5.0							NPN		None
87	LPT80A(A)	100m	30	50m	4A%			200u†	500u	B	950n	5.0		870n	150m†	250u	500u	AD	NPN	AA	PD1399 ☑
88	MAL100	360m	30	50m	5F%	100n	5.0	200u	2.0m	C		5.0	5.0u*	800n				AD	NPN	AD	PT34e
89	MEL100	360m	30	50m	5F%	100n	5.0	200u	2.0m	C		5.0	5.0u*	800n				AD	NPN	AH	PT56b
90	FPT100(1)	200m	30	25m	58§	100n	5.0	200u	5.0m	C		5.0	2.8u#	800n	300m	500u	20m	AD	NPN	AD	PT21a
91	FPT110	200m	30	25m	58§	100n	5.0	200u	5.0m	C		5.0	2.8u#	800n	330m	500u	20m	AD	NPN	AD	PT36 Ø
92	MFPT100	200m	30	25m	58§	100n	5.0	200u	5.0m			5.0	2.8u#		300m	500u	20m	AD	NPN	AH	PT56b
93	MRD3051	400m	30		6M§	100n	20	200u	5.0m	E		20 *	2.0u#	800n				AD	NPN	ADØ	PT2 Ø
94	STPT100	200m	30	25m	58	100n	5.0	200u	5.0m	C		5.0	2.8u#	800n	300m	500u	20m	AD	NPN	AD	PT21c
95	STPT110	200m	30	25m	58	100n	5.0	200u	5.0m	C		5.0	2.8u#	800n	330m	500u	20m	AD	NPN	AD	PT36 Ø
96	CLCT511		35			40n	10	200u	5.0m	C		5.0	3.0u#		500m	1.0m			NPN	♦	PT157 ☑
97	STPT225P	50m	40	10m	4A	100n	20	200u	5.0m	E		20 *	5.0u#	800n	400m	300u	20m		NPN	AA	PT50 ☑
98	LPT100	200m	50 △	100m	5A%	100n	5.0	200u	5.0m	C		5.0	2.8u#	800n	400m	500u	20m	AD	NPN	AD	PT21a Ø
99	LPT110	200m	50 △	100m	5A%	100n	5.0	200u	5.0m	C		5.0	2.8u#	800n	400m	500u	20m	AD	NPN	AD	PT36 Ø
100	VTT1012	250m	50	200m	6M	500p†	20	200u	5.0m			5.0	3.0u#	775n	100m†	1.0m	20m		NPN	AD	PT18
101	PN205	100	20	30m	28	500n	10	200u	2.0 $	C	800n	10	100u*	800n	1.5	1.0m	100 $		NPN	AB	PD212 ☑
102	VTT9310	100m	50	50m	5A	3.0n†	20	200u	5.0	C		5.0	3.0u#	775n	100m†	1.0m	20m		NPN	AA	PT13 Ø
103	PN158	100m	20	20m	28	1.0u	10	200u†	500 $	C		10	4.0u#	800n	0.5	1.0m	1.0k$	AD	NPN	AB	PD915
104	BPW13A	375m	32	50m	5H%	100n	20	200u	1.0k$	C	735n	32	1.6u#	780n	300m	100u	1.0k$	AD	NPN	ADØ	PT18 Ø
105	BPX29	300m	50	200m	C §	100n	24	.2m	1.0k$	G		6.0	5.0u#	800n				AD	NPN	AD	PT18m Ø
106	108-4	125m	30	25m		.10u	15	250u				15 *	5.0u#					AD	NPN		PS244g
107	VTT7221	50m	30	25m	48	100n	10	.25m	5.0m	C		5.0	1.0u	850n	.25	1.0m	20m	AD	NPN		PD919
108	VTT1120	250m	50	200m	6M	500p†	20	250u	5.0	C		5.0	1.0u#	775n	150m†	1.0m	20m		NPN	AD	PT2v
109	PH108(2)	100m	30	40m	XA§	100n	10	.3m			940n	5	40u#		.3	.5m			NPN	AA	PD1240
110	OP509SLC	80m	30		48	100n	10	.30m	1.0m	E		5.0			0.4	250u	5.0m	Si	NPN	AB	PD611

SYMBOLS AND CODES EXPLAINED IN INTERPRETER

11. PHOTOTRANSISTORS - NPN (Cont'd)

IN ORDER OF: (1) TYPE (2) LIGHT CURRENT (3) Ee TEST & (4) TYPE NUMBER

LINE No.	4 TYPE NUMBER	MAX. RATINGS @25°C PD (W)	3 VCEO (V)	IC (A)	TEMP RNG. CODE - +	MAX. DARK CURR. ID @25°C (A)	VCE (V)	2 MIN. LIGHT CURR. IL (A)	--TEST CONDITIONS- 3 Ee (W/cm2)	S R C	λ (m)	VCE (V)	RESP. TIME (s)	PEAK WAVE-LNTH. λp (m)	MAX SATURATION VOTLAGE VCE (SAT) (V)	IC TEST (A)	Ee TEST W/cm2	MAT	1 TYPE CODE	LEAD CODE	DRAWING
1	TEMT2100	70m	70	50m	2A%	200n	20	300u	1.0m	A	950n	5.0		830n	300m	100u	1.0m	AD	NPN	AB	PD1384
2	OP800W	250m	30	50m	6C	100n	10	300u	5.0m	E		5.0	5.0u#	850n	400m	400u	20m	AD	NPN	ADØ	PT18j Ø
3	OP841W	250m	30	50m	6C	100n	10	0.3m	5.0m	E			2.0u#		0.4	0.4m	5.0m		NPN		PT2g Ø
4	XC800W	250m	30		6C	100n	10	300u	5.0m	E		5.0			400m	400u	5.0m	AD	NPN	AD	PT18n Ø
5	VTT9322	100m	40	25m	5A	1.0n†	20	300u	5.0m	C		5.0	2.0u#	775n	150m†	1.0m	20m		NPN	AA	PT13 Ø
6	STPT1820-1		10		6C	1.0u	10	300u	20m	E		5.0			300m	200u		AD	NPN	AD	PT2ac
7	VTT1022	250m	40	200m	6M	500p†	20	300u	5.0	C		5.0	2.0u#	775n	150m†	1.0m	20m		NPN	AD	PT18
8	PN101F	150m	30	50m	28	5.0n†	10	300u†	100 $	C		10	3.0u	800n	200m†	100u	500m$	AD	NPN	AB	PD8d
9	PN102F	150m	30	50m	28	300n	10	300u†	100 $			10	3.0u#	800n	200m†	100u	500 $	AD	NPN	AD	PT18n
10	PN106	100	30	20m	4C	100n	10	300u	100 $	C	800n	10	5.0u*	800n	400m	1.0m	1.0k$		NPN	AD	PT2ab
11	BPW13B	375m	32	50m	5H%	100n	20	300u	1.0k$	C	735n	32	1.6u#	780n	300m	100u	1.0k$	AD	NPN	ADØ	PT18 Ø
12	SDP8405-013	60m	30		48	100u	15	320u	250u	A	935n	5.0	10u#	880n	300m†	400u	20m	AD	NPN	AA♦	PT31c Ø
13	STPT240P	50m	30	20m	4A	100n	5.0	350u	5.0m	E		5.0	15u#	800n	400m	500u	20m		NPN	AA	PT50 ☑
14	SDP8403-301				48	100n	15	400u	250u		880n	5.0	8.0u#		300m†	400u	2.0m	AD	NPN	AA♦	PD232a Ø
15	STPT120	200m	15	25m	58	100n	5.0	400u	1.0m	C		5.0	18u#	800n	550m	1.0m	20m	AD	NPN	AD	PT21d
16	STPT130	200m	15	25m	58	100n	5.0	400u	1.0m	C		5.0	20u#	800n	550m	1.0m	20m	AD	NPN	AD	PT36b Ø
17	FPT120	200m	20	25m	58§	100n	5.0	400u	1.0m	C		5.0	18u#	850n	550m	1.0m	20m	AD	NPN	AD	PT21b
18	MII68002(A)		30			100n	10	400u	1.0m	E		5.0 *	10u#	825n				AD	NPN		PT146
19	BPW39B	150m	32	100m	28%	100n	20	400u	1.0m		950n	5.0	1.6u#	780n	300m	100u	1.0k$	AD	NPN	A	PT124
20	BPW76A	250m	70	50m	5C%	100n	20	400u	1.0m		950n	5.0	3.5u#	800n	300m	100u	1.0m	AD	NPN	AD	PT18 Ø
21	CLCT320		35			40n	10	400u	5.0m	C		5.0	6.0u#		500m	1.0m			NPN	♦	PT158 ☑
22	VTT1011	250m	40	200m	6M	500p†	20	400u	5.0m			5.0	5.0u#	775n	100m†	1.0m	20m		NPN	AD	PT18
23	TIL64	50m	50		48	25n	30	400u	20m	E		5.0	8.0u#	820n	150m†	400u	20m	AD	NPN	AA	PT30 Ø
24	VTT9311	100m	40	50m	5A	3.0n†	20	400u	5.0	C		5.0	5.0u#	775n	100m†	1.0m	20m		NPN	AA	PT13 Ø
25	PN107F	150m	20	30m	28	50n†	10	400u†	100 $	C		10	5.0u#	900n	300m†	1.0m	1.0 $	AD	NPN	AB	PD8d
26	PN123S	50m	20	10m	28	1.0n†	10	400u†	1.0k$			10	3.5u#	800n				AD	NPN	AB	PT47a Ø
27	FPT330	200m	20	25m	58§	100n	5.0	450u	1.0m	C		5.0	18u#	850n	550m	1.0m	20m	AD	NPN	AD	PT36a Ø
28	VTM7122	50m			8 ♦	100m	10	0.5m				5.0	3.0u		0.4	.25m		AD	NPN		PT113
29	VTM7125	50m			8 ♦	100n	10	0.5m				5.0	50u		1.0	0.2m		AD	NPN		PT113
30	PH105	150m	30	50m	A §	200n	10	500u				10			300m	500u			NPN		PD280d
31	SPT7	150m	30		39	1.0	5.0	0.5m			500n	5.0		830n				AD	NPN	A	PD608 ☑
32	SPT5	75m	40		27	1.0	3.0	0.5m			500n	3.0		800n				AD	NPN	A	PD118a Ø
33	SPT8	100m	50		4C	1.0	5.0	0.5m			500n	5.0		830n				AD	NPN	A	PD570
34	STPT1830-1		10		6C	100n†	5.0	500u	1.0m	E		5.0	40u#		150m	400u		AD	NPN	AD	PT2ac
35	OP560	50m	30			100n	10	500u	1.0m			2.0			1.1	400u	1.0m	AD	NPN	AA	PT89
36	BPW42	100m	32	50m	2A%	200n	20	500u	1.0m	A	950n	5.0		830n	300m	100u	1.0m	AD	NPN	AB	PD393
37	BPX71	100m	50	20m	6C%	25n	30	500u	4.7m	C		5.0	3.0u#	800n	150m†	400u	20m	AD	NPN	♦	PT6c Ø
38	BPX72	180m	50	25m	C §	100n	20	500u	4.7m	C		5.0	6.0u#	800n				AD	NPN	AD♦	PT34a Ø
39	MRD3054	400m	30		6M§	100n	20	500u	5.0m	E		20 *	2.0u#	800n				AD	NPN	ADØ	PT2 Ø
40	OP800	250m	30	50m	6C	100n	10	500u	5.0m			5.0	8.0u#	850n	400m	400u	5.0m	AD	NPN	ADØ	PT2g Ø
41	OP801	250m	30	50m	6C	100n	10	500u	5.0m			5.0	5.0u#	850n	400m	400u	5.0m	AD	NPN	ADØ	PT2g Ø
42	OP801W	250m	30	50m	6C	100n	10	500u	5.0m	E		5.0	8.0u#	850n	400m	400u	5.0m	AD	NPN	ADØ	PT18j Ø
43	OP841	250m	30	50m	6C	100n	10	0.5m	5.0m	E			2.0u#		0.4	0.4m	5.0m		NPN		PT2g Ø
44	SD3443-001	150m	30		5C	100n	10	500u	5.0m	E		5.0	6.0u#	880n	200m	400u	10m	AD	NPN	AH♦	PT39 Ø
45	VTT7222	50m	30	25m	48	100n	10	.50m	5.0m	C		5.0	2.0u	850n	.25	1.0m	20m	AD	NPN		PD919
46	XC801W	250m	30		6C	100n	10	500u	5.0m	E		5.0			400m	400u	5.0m	AD	NPN	AD	PT18n Ø
47	CLCT511A		35			40n	10	500u	5.0m	C		5.0	5.0u#		500m	1.0m			NPN	♦	PT157 ☑
48	CLT4140	75m	40	200m	F §	50n	10	500u	5m	C		5.0	3u#	840n	.3	.25m	20m		NPN	AC	PT89b
49	CLT5160	50m	40	200m	6F§	25n	10	500u	5.0m	C		5.0	1.5u		300m	400u	20m	AD	NPN	AB	PT11 Ø
50	FPT510	600m	45	50m	5F	100n	5.0	500u	5.0m	C		5.0	3.0u#	900n	330m	500u	2.0m	AD	NPN	AD	PT14c Ø
51	VTT3121	50m	50	25m	6M	500p†	20	500u	5.0m	C		5.0	1.0u*	775n	150m†	1.0m	20m		NPN	AB	PT11 Ø
52	VTT3121E	50m	50	25m	C ♦	10n	20	0.5m	5.0m	C		5.0	1.5u		250m	1.0m		AD	NPN	AB	PT109
53	VTT9011	200m	50			10n	5.0	500u	5.0m			5.0	2.0u	850n	150m†	1.0m	5.0m	AD	NPN	AD	PT36 Ø
54	GS2020-4	50m	50		6C☑	25n	30	500u	9.0m	E		5.0	2.5u	825n	300m	400u	9.0m	AD	NPN		PT23
55	TPS603	75m	20	20m	27	100n	10	500u	10m			3.0	2.0u#		500m	500	10m	AD	NPN	AB	PT47 Ø
56	FS511	100m	30	30m	38	0.2u	10	0.5m	10m	C	800n	5.0	5.0u#	800n	0.1 †	0.5m	10m	AD	NPN		PD1113 Ø
57	L14C2	600m	30	50m	6M§	100n	20	500u	10m	E		5.0	5.0u		400m	10m		AD	NPN	AD	PT18d Ø
58	STPT1530-1		10		6C	1.0u	10	500u	20m	E		5.0	3.0u#		300m	400u		AD	NPN	AJ	PT71
59	OP640		25			100n	10	500u	20m			5.0	3.0u#	850n	400m	400u	20m	AD	NPN	AB	PT6b Ø
60	OP641	50m	25		6C	100n	10	500u	20m	E		5.0	5.0u#	850n	400m	400u	20m	AD	NPN	AB	PT6b Ø
61	K5500	50m	30	100u	68	100n	15	500u	20m	E	400n	5.0	3.0u#	900m	300m	400u	5.0m	AD	NPN	AA	None
62	OP500W	50m	30		48	100n	15	500u	20m	E		5.0						AD	NPN	AA	PT84 Ø
63	OP508F	50m	30		48	100n	10	500u	20m			5.0						AD	NPN	AA	PT97 ☑
64	SD2440-001	125m	30		5C	100n	10	500u	20m	E		5.0	4.0u#	880n	300m†	400u	20m	AD	NPN	AB♦	PT6b Ø
65	STPT260	600m	30		5F	25n	30	500u	20m	E		5.0	1.5u#	850n	300m		20m		NPN	AD	PT18b Ø
66	1N5722	50m	50		6C☑	25n	30	500u	20m	E		5.0	1.5u#	900n	150m†	400u	20m	AD	NPN	AA	PT6f
67	GS1020-1	50m	50	0.4m	6C	25n	30	0.5m	20m	E	825n	5.0	2.0u	825n	0.3	0.4m	20m	AD	NPN	A	PT6g
68	MRD601	50m	50		6A§	25n	30	500u	20m	E	900n		1.5u#		130m†	500u	20m	AD	NPN	A	PT6 Ø
69	MRD611	50m	50		6C	25n	30	.5m	20m	E	900n	5.0	1.5u#		.13 †	.5m	20m	AD	NPN	A	PT6f
70	OP600	50m	50		6C	25n	10	500u	20m	E		5.0	3.0u#	850n	400m	400u	20m	AD	NPN	AB	PT6b Ø
71	OP601	50m	50		6C	25n	10	500u	20m	E		5.0	5.0u#	850n	400m	400u	20m	AD	NPN	AB	PT6b Ø
72	STPT60		50		6C	25n	30	500u	20m	E		5.0	1.5u#		300m†	400u	20m	AD	NPN	AB	PT6g
73	STPT61		50		6C	25n	30	500u	20m	E		5.0	1.5u#		150m†	400u	20m	AD	NPN	AB	PT6g
74	TIL601	50m	50		6C	25n	30	500u	20m	E		5.0	8.0u#	900n	150m†	400u	20m	AD	NPN	AB	PT6b Ø
75	PN108F	150m	20	30m	28	2.0u	10	500u†	100 $			10	5.0u#	900n	300m†	1.0m	1.0k$	AD	NPN	AD	PT18n
76	VTT7111	50m	30		48	100n	10	0.5m	100 *	C		5.0	4.0u*		0.4	1.0m			NPN	AB	PT113
77	VTT7121	50m	30		48	100n	10	0.5m	100 *	C		5.0	2.5u*		0.4	1.0m			NPN	AB	PT113
78	CEN811	100m	40	30m	29	200n	10	500u	200 $	C	800n	10	5.0u*	800n	400m	2.0m	2.0k$		NPN	AB	PT143
79	ST1KA	150m	40	50m	3C	200n	10	500u	200 $	C		10	3.2u#	880n	400m	5.0m	2.0k$	AD	NPN	AB§	PT135 Ø
80	ST1KB	150m	40	50m	3C	200n	10	500u	200 $	C		10	8.0u#	880n	400m	5.0m	2.0k$	AD	NPN	ADØ	PT136 Ø
81	ST1MLA	100m	40	30m	29	200n	10	500u	200 $	C		10	8.0u#	880n	400m	2.0m	2.0k$	AD	NPN	AB§	PT138 Ø
82	ST1MLARII	100m	40	30m	29	200n	10	500u	200 $	C		10	8.0u#	940n	400m	2.0m	2.0k$	AD	NPN	AB§	PT138 Ø
83	ST1MLB	100m	40	30m	29	200n	10	500u	200 $	C		10	8.0u#	880n	400m	2.0m	2.0k$	AD	NPN	AD§	PT139 Ø
84	ST1MLBRII	100m	40	30m	29	200n	10	500u	200 $	C		10	8.0u#	940n	400m	2.0m	2.0k$	AD	NPN	ADØ	PT139 Ø
85	PN112	50m	26	10m	28	0.5u	10	0.5m	500 $	C		10	4.0u#	800n	0.5	1.0m	1.0k$	AD	NPN	♦	PT130
86	CEN820	75m	20	20m		100n	10	500u	1.0k$		800n	10	4.0u*	800n	400m	200u	2.0k$		NPN	AB	PT47d
87	ST1CL3H	75m	20	20m	29	200n	10	500u	1.0k$	C	500n	3.0	2.5u#	880n	0.4	200u	2.0k$	AD	NPN	AB	None
88	ST1CL5	75m	30	20m	27	200n	10	500u	1.0k$	C		5.0	3.2u#	880n	400m	5.0m	2.0k$	AD	NPN	AD	PT134 Ø
89	ST23F	100m	30	20m	2A	100n	10	500u	1.0k$	C	500n	5.0	3.2u#	880n	0.4	200u	2.0k$	AD	NPN	AB	None
90	BPW13C	375m	32	50m	5H%	100n	20	500u	1.0k$	C	735n	32	1.6u#	780n	300m	1.0m	1.0k$	AD	NPN	ADØ	PT18 Ø
91	SFH317(A)	200m	35	50m	5A%	2.0n	10	500u	1.0k$			5.0	15u#	850n	140m†	2.0m	1.0k$	AD	NPN		PT1 Ø
92	BPW76B	250m	70	50m	5C%	100n	20	600u	1.0m		950n	5.0	3.5u#	800n	300m	100u	1.0m	AD	NPN	AD	PT18 Ø
93	FPT110A	200m	30	25m	58§	100n	5.0	600u	5.0m	C		5.0	2.8u#	800n	330m	500u	20m	AD	NPN	AD	PT36 Ø
94	STPT110A	200m	30	25m	58	100n	5.0	600u	5.0m	C		5.0	2.8u#	800n	330m	500u	20m	AD	NPN	AD	PT36 Ø
95	VTT9323	100m	30	25m	5A	2.0n†	20	600u	5.0m	C		5.0	3.0u#	775n	150m†	1.0m	20m		NPN	AA	PT13 Ø
96	CLT2010	250m	50	200m	6F§	25n	10	600u	5.0m	C		5.0	3.0u		300m	10m	0	AD	NPN	ADØ	PT18 Ø
97	LPT110A	200m	50 Δ	100m	5A%	100n	5.0	600u	5.0m	C		5.0	2.8u#	800n	400m	500u	20m	AD	NPN	AD	PT36 Ø
98	STPT1820-2		50		6C	25n	30	600u	20m	E		5.0	4.0u#		300m	400u		AD	NPN	AD	PT2ac
99	VTT1023	250m	30	200m	6M	500p†	20	600u	5.0	C		5.0	3.0u#	775n	150m†	1.0m	20m		NPN	AD	PT18
100	BPX38-II	330m	50	50m	5H§	200n	25	630u	1.0k*	C		5.0	9.0u#	870n	175m	2.0m	5.0m	AD	NPN	AD	PT18f Ø
101	SDP8405-014	60m	30		48	100u	15	640u	250u	A	935n	5.0	11u#	880n	300m†	400u	20m	AD	NPN	AA♦	PT31c Ø
102	VTT1121	250m	50	200m	6M	500p†	20	650u	5.0	C		5.0	2.0u#	775n	150m†	1.0m	20m		NPN	AD	PT2v
103	SDP8403-302				48	100n	15	670u	250u		880n	5.0	10u#		300m†	400u	2.0m	AD	NPN	AA♦	PD232a Ø
104	SPT9	100m	50		4C	1.0	5.0	0.7m			500n	5.0		830n				AD	NPN	A	PD609 Ø
105	STPT1520-1		10		6C	1.0u	10	700u	5.0m	E		5.0			300m	400u		AD	NPN	AB	PT109
106	SD1440-001	75m	30		5C	100n	10	700u	5.0m	E		5.0	4.0u#	880n	300m†	400u	5.0m	AD	NPN	AB☑	PT11 Ø
107	SD1440-001L	75m	30		5C	100n	10	700u	5m	E		5	4.0u#	880n	300m†	400u	5.0m	AD	NPN	AB☑	PD93 Ø
108	GS3020-1	50m	50	0.4m	6C	25n	30	0.7m	5.0m	E	825n	5.0	2.0u	825n	0.3	0.4m	5.0m	AD	NPN		PT109
109	SFH500	100m	15	20m	5A%	50n	10	700u†	1.0k*			5.0	250p#	825n	800m†	500u	0.0	AD	NPN	AC	TO-18 Ø
110	STSKLT	75m	40	20m	3C	100n	10	700u	1.0k$	C	500n	5.0	3.2u#	880n	0.4	200u	4.0k$	AD	NPN	AB☑	PD609

SYMBOLS AND CODES EXPLAINED IN INTERPRETER

11. PHOTOTRANSISTORS - NPN (Cont'd)

IN ORDER OF: (1) TYPE (2) LIGHT CURRENT (3) Ee TEST & (4) TYPE NUMBER

LINE No.	4 TYPE NUMBER	MAX. RATINGS @25°C PD (W)	3 VCEO (V)	IC (A)	TEMP RNG. CODE - +	MAX. DARK CURR. ID @25°C (A)	VCE (V)	2 MIN. LIGHT CURR. IL (A)	--TEST CONDITIONS- 3 Ee (W/cm2)	S R C	λ (m)	VCE (V)	RESP. TIME (s)	PEAK WAVE-LNTH. λp (m)	MAX SATURATION VOTLAGE VCE (SAT) (V)	IC TEST (A)	Ee TEST W/cm2	MAT	1 TYPE CODE	LEAD CODE	DRAWING
1	PT100(2)	50m	45		3C	100n	30	750u	20m	E			10u#	800n				AD	NPN	AA	PT51 Ø
2	SFH303F	200m	50	50m	5A%	50n	10	800u	500u		950n	5.0	15u#	900n	130m†	250u	500u	AD	NPN		PT1 Ø
3	BPW85	100m	70	50m	2A%	200n	20	800u	1.0m		950n	5.0		830n	300m	100u	1.0m	AD	NPN	AB	PD393
4	OP502	80m	20		48	100n	10	0.8m	5.0m	E		5.0	3.0u#		0.4 †	0.5m	5.0m	AD	NPN	AC	None
5	OPC60X		30	100u		100n	10	800u	5.0m	E		5.0							NPN	ADØ	PT63 *
6	STPT110B	200m	30	25m	58	100n	5.0	800u	5.0m	C		5.0	2.8u#	800n	330m	500u	20m	AD	NPN	AD	PT36 Ø
7	CLT4150	75m	40	200m	F §	50n	10	800u	5m	C		5.0	3u#	840n	.3	.25m	20m		NPN	AC	PT89b
8	LPT110B	200m	50 Δ	100m	5A%	100n	5.0	800u	5.0m	C		5.0	2.8u#	800n	400m	500u	20m	AD	NPN	AD	PT36 Ø
9	OPC600L		45	100u		100n	10	800u	20m	E		5.0		850n					NPN	ADØ	PT66 *
10	LS600	50m	50		6C	25n	30	800u	20m	E		5.0	1.5u#	900n	150m	400u	20m	AD	NPN	AB	PT6b Ø
11	PN168	100m	30	20m	28	5.0u	10	800u	500 $	C		10	4.0u#	800n	0.5	1.0m	1.0k$	AD	NPN	AB	PD322b
12	BPX72D	180m	50	25m	C §	100n	20	850u	4.7m	C		5.0	6.0u#	800n				AD	NPN	AD♦	PT34a Ø
13	STPT130A	200m	15	25m	58	100n	5.0	900u	1.0m	C		5.0	20u#	800n	550m	1.0m	20m	AD	NPN	AD	PT36b Ø
14	VTM3321	50m			8 ♦	100m	10	1.0m				5.0	3.0u		0.4	0.2m		AD	NPN		PD975
15	VTM3323	50m			8 ♦	100m	10	1.0m				5.0	50u		1.0	0.2m		AD	NPN		PD975
16	VTM7123	50m			8 ♦	100n	10	1.0m				5.0	4.0u		0.4	.25m		AD	NPN		PT113
17	MFPT100A	200m	30	25m	58§	100n	5.0	1.0m		C			2.8u#		300m	500u	20m	AD	NPN	AH	PT56b
18	SPA1F	50m	40		28	1.0	10	1.0m			500n	10		830n				AD	NPN	A	None
19	SPT6	75m	40		16	1.0	5.0	1.0m			500n	5.0		800n				AD	NPN	A	PD18a Ø
20	SPT10	50	40		28	1.0	10	1.0m			500n	10		830n				AD	NPN	A	PD608 ☑
21	STPT300	250m	50		6M	25n	20	1.0m	200u			20 *	1.0u	800n				AD	NPN	ADØ	PT2m Ø
22	BPW78	150m	5	100m	A §	100n	20	1.0m	1.0m	A	950n	5	3.4u	780n	0.3	0.1m	1m		NPN	♦	PT127 ☑
23	STPT1830-2		10		6C	100n†	5.0	1.0m	1.0m	E		5.0	60u#		150m	400u		AD	NPN	AD	PT2ac
24	FPT800	100m	30	30m	5A	100n	5.0	1.0m	1.0m	A	900n	5.0	2.8u#	850n	0.4	500u	1.0m	AD	NPN	AA	PD608a
25	BPW40(A)	100m	32	100m	2A%	200n	20	1.0m	1.0m	A	950n	5.0	1.6u#	780n	300m	1.0m	1.0m	AD	NPN	AA	PD232h
26	VTT1131	250m	40	200m	6C	100n	10	1.0m	1.0m	C		5.0	5.0u	850n	0.4	1.0m	20m	AD	NPN		TO-18
27	SDP8490-001				48	100n	15	1.0m	1.5m		880n	5.0	8.0u#		300m†	400u	1.5m	AD	NPN	♦	PT149 Ø
28	107-1	100m	25	15m	07	200n	5.0	1.0m	2.0m	E		5.0 *	15u#		500m	1.0m	10m		NPN	AM	PT69 ☑
29	OP502A	80m	20		48	100n	10	1.0m	5.0m	E		5.0	3.0u#		0.4 †	0.5m	5.0m	AD	NPN	AC	None
30	STPT260P	50m	20	30m	4A	1.0u	5.0	1.0m	5.0m	E		5.0	50u#	800n	300m	400u	20m	AD	NPN	AA	PT50 ☑
31	FPT100A	200m	30	25m	58§	100n	5.0	1.0m	5.0m	C		5.0	2.8u#	800n	300m	500u	20m	AD	NPN	AD	PT21a
32	GS4021-1	250m	30	50m	6C	100n	10	1.0m	5.0m	E	825n	5.0	3.0u	825n	0.2	0.4m	5.0m	AD	NPN	AD	PD1174
33	K5200	250m	30	100u	68	100n	10	1.0m	5.0m	E	400n	5.0	4.0u#	900n	300m	400u	5.0m	AD	NPN	AD	PT2ac
34	L14Q1	150m	30		5A§	100n	25	1.0m	5.0m	E		5.0	8.0u#	850n	0.4	0.5m	2.0m	AD	NPN	AB	PT110
35	OP593C	250m	30	50m	4A	100n	10	1.0m	5.0m	E	920n	5.0		850n	400m	400u	5.0m	AD	NPN	AB	PT149
36	OP842W	250m	30	50m	6C	100n	10	1.0m	5.0m	E			2.0u#		0.4	0.4m	5.0m		NPN		PT2g Ø
37	SD3443-002	150m	30		5C	100n	10	1.0m	5.0m	E		5.0	6.0u#	880n	200m†	400u	10m	AD	NPN	AH♦	PT39 Ø
38	SD5443-001	150m	30		5C	100n	10	1.0m	5.0m	E		5.0	4.0u#	880n	200m†	400u	10m	AD	NPN	AH♦	PT38 Ø
39	SDP8405-001	60m	30		48	100u	15	1.0m	5.0m	E		5.0	8.0u#	880n	300m†	400u	20m	AD	NPN	AA♦	PT31c Ø
40	SDP8425-001	60m	30		48	100u	15	1.0m	5.0m	A	935n	5.0	8.0u#	880n	300m†	400u	10m	AD	NPN	AA♦	PT31c Ø
41	STPT100A	200m	30	25m	58	100n	5.0	1.0m	5.0m	C		5.0	2.8u#	800n	300m	500u	20m	AD	NPN	AD	PT21c
42	VTT1010	250m	30	200m	6M	500p†	20	1.0m	5.0m			5.0	5.0u#	775n	100m†	1.0m	20m		NPN	AD	PT18
43	VTT7223	50m	30	25m	48	100n	10	1.0m	5.0m	C		5.0	2.0u	850n	.25	1.0m	20m	AD	NPN		PD919
44	CLCT320A		35			40n	10	1.0m	5.0m	C		5.0	8.0u#		500m	1.0m			NPN	♦	PT158 ☑
45	OT400-1		35		6C	40n	10	1.0m	5.0m	E		5.0	3.0u		500m	1.0m		AD	NPN		PT153
46	OT400-1L		35		6C	40n	10	1.0m	5.0m	E		5.0	3.0u		500m	1.0m		AD	NPN		PT154
47	MRD150	50m	40		4A§	100n	20	1.0m	5.0m	E	900n		2.5u#	800u				AD	NPN	ABØ	PT4 Ø
48	VTT1031	250m	40	200m	6C	100n	10	1.0m	5.0m	C		5.0	5.0u	850n	0.4	1.0m	20m	AD	NPN		TO-18
49	LPT100A	200m	50 Δ	100m	5A%	100n	5.0	1.0m	5.0m	C		5.0	2.8u#	800n	400m	500u	20m	AD	NPN	AD	PT21a Ø
50	MRD310	250m	50		6M§	25n	20	1.0m	5.0m	E			2.5u#					AD	NPN	ADØ	PT2a Ø
51	VTT1110	250m	50	200m	6M	500p†	20	1.0m	5.0m			5.0	3.0u#	775n	100m†	1.0m	20m		NPN	AD	PT2v
52	VTT3321	50m	50	25m	48	100n	20	1.0m	5.0m	C		5.0	15u	850n	.25	1.0m	20m	AD	NPN	A	PD975
53	GS2020-11	50m	25		6CØ	100n	30	1.0m	9.0m	E		5.0	2.5u	825n	300m	400u	9.0m	AD	NPN		PT23
54	GS2020-1	50m	50	0.4m	6CØ	100n	30	1.0m	9.0m	E	825n	5.0	2.5u	825n	0.3	0.4m	9.0m	AD	NPN		PT23
55	GS2020-2	50m	50	0.4m	6CØ	25n	30	1.0m	9.0m	E	825n	5.0	2.5u	825n	0.3	0.4m	9.0m	AD	NPN		PT23
56	GS2020-3	50m	50		6CØ	25n	30	1.0m	9.0m	E		5.0	2.5u	825n	300m	400u	9.0m	AD	NPN		PT23
57	GS2020-12	50m	50		6CØ	25n	30	1.0m	9.0m	E		5.0	2.5u	825n	300m	400u	9.0m	AD	NPN		PT23
58	PT350	50m	20		2A	100n	20	1.0m	10m	B		5.0	10u#	800n				AD	NPN	AB	PT47b Ø
59	L14C1	600m	45	50m	6M§	100n	20	1.0m	10m	E		5.0	5.0u		400m	10m		AD	NPN	AD	PT18d Ø
60	STPT1630-1		10		6C	1.0u	10	1.0m	20m	E		5.0			300m	400u		AD	NPN	AB	PT6e
61	K5550	250m	30	100u	68	100n	10	1.0m	20m	E	400n	5.0	3.0u#	900m	300m	400u	5.0m	AD	NPN	AB	PT110 Ø
62	MPC33TS	50m	30	100u	48	100n	15	1.0m	20m	E		5.0	5.0m#		0.4	0.5m	20m	Si	NPN		PT31c
63	MPC33TSA	50m	30	100u	48	100n	15	1.0m	20m	E		5.0	5.0m#		0.4	0.5m	20m	Si	NPN		PT31c
64	OP500	50m	30		47	100n	15	1.0m	20m	E		5.0	2.0u#	850n	500m	250u	20m	AD	NPN	AA	PT31 Ø
65	OP550	50m	30		48	100n	10	1.0m	20m	E		5.0			400m	250u	20m	AD	NPN	AA	PT89a
66	K5151	250m	50	100u	68	25n	30	1.0m	20m	E	400n	5.0	4.0u#	900n	300m	400u	20m	AD	NPN	AK	PT6 Ø
67	VTT9312	100m	30	50m	5A	3.0n†	20	1.0m	5.0	C		5.0	5.0u#	775n	100m†	1.0m	20m		NPN	AA	PT13 Ø
68	STPT40		30		6C	25n	30	1.0m	9.0	E		5.0	2.5u#		300m	400u		AD	NPN		PT23
69	VTT7122	50m	30		48	100n	10	1.0m	100 *	C		5.0	2.5u*		0.4	1.0m			NPN	AB	PT113
70	PN154	100m	20	20m	28	1.0u	10	1.0m	500 $	C		10	4.0u#	800n	0.5	1.0m	1.0k$	AD	NPN	AB	PD915
71	PN126S	50m	20	20m	28	1.0n†	10	1.0m	1.0k$	C		10	2.5u	800n				AD	NPN	AB	PT47 Ø
72	ST7L	75m	20	20m	28	100n	10	1.0m	1.0k$	C	500n	3.0	2.5u#	880n	0.4	200u	2.0k$	AD	NPN	AB	None
73	BPX81-II	100m	32	50m	48%	200n	25	1.0m	1.0k*	C		5.0	5.5u#	850n	200m	250u	5.0m	AD	NPN	AA	PT54 ☑
74	SFH305-2	75m	32	50m	48%	20n	35	1.0m	1.0k$			5.0	5.5u#	850n	150m	300u	1.0k$	AD	NPN		PT111 ☑
75	BPX38-III	330m	50	50m	5H§	500n	25	1.0m	1.0k*	C		5.0	12u#	870n	160m	2.0m	5.0m	AD	NPN	AD	PT18f Ø
76	SDP8403-303				48	100n	15	1.1m	250u		880n	5.0	14u#		300m†	400u	2.0m	AD	NPN	AA♦	PD232a Ø
77	SDP8405-015	60m	30		48	100u	15	1.2m	250u	A	935n	5.0	12u#	880n	300m†	400u	20m	AD	NPN	AA♦	PT31c Ø
78	STPT130B	200m	15	25m	58	100n	5.0	1.2m	1.0m	C		5.0	20u#	800n	550m	1.0m	20m	AD	NPN	AD	PT36b Ø
79	CLT2020	250m	30	200m	6F§	25n	10	1.2m	5.0m	C		5.0	3.0u		300m	10m	0	AD	NPN	ADØ	PT18 Ø
80	VTT3122	50m	40	25m	6M	500p†	20	1.2m	5.0m	C		5.0	2.0u*	775n	150m†	1.0m	20m		NPN	AB	PT11 Ø
81	VTT3122E	50m	40	25m	C ♦	10n	20	1.2m	5.0m	C		5.0	2.5u		250m	1.0m		AD	NPN	AB	PT109
82	STPT1820-3		50		6C	25n	30	1.2m	20m	E		5.0	8.0u#		300m	400u		AD	NPN	AD	PT2ac
83	VTT1122	250m	40	200m	6M	500p†	20	1.2m	5.0	C		5.0	2.0u#	775n	150m†	1.0m	20m		NPN	AD	PT2v
84	MFPT100B	200m	30	25m	58§	100n	5.0	1.3m					2.8u#		300m	500u	20m	AD	NPN	AH	PT56b
85	FPT100B	200m	30	25m	58§	100n	5.0	1.3m	5.0m	C		5.0	2.8u#	800n	300m	500u	20m	AD	NPN	AD	PT21a
86	STPT100B	200m	30	25m	58	100n	5.0	1.3m	5.0m	C		5.0	2.8u#	800n	300m	500u	20m	AD	NPN	AD	PT21c
87	LPT100B	200m	50 Δ	100m	5A%	100n	5.0	1.3m	5.0m	C		5.0	2.8u#	800n	400m	500u	20m	AD	NPN	AD	PT21a Ø
88	BPX72E	180m	50	25m	C §	100n	20	1.4m	4.7m	C		5.0	6.0u#	800n				AD	NPN	AD♦	PT34a Ø
89	CLT5170	50m	40	200m	6F§	25n	10	1.4m	5.0m	C		5.0	1.5u		300m	400u	20m	AD	NPN	AB	PT11 Ø
90	FPT120A	200m	15	25m	58§	100n	5.0	1.5m	1.0m	C		5.0	18u#	850n	550m	1.0m	20m	AD	NPN	AD	PT21a
91	STPT120A	200m	15	25m	58	100n	5.0	1.5m	1.0m	C		5.0	18u#	800n	550m	1.0m	20m	AD	NPN	AD	PT21d
92	BPW22A1	100m	50	25m	5A%	100n	30	1.5m	1.0m		800n	5.0	3.0u	800n	.40	1.0m	1.0m	AD	NPN	♦	PT105 Ø
93	MRD3055	400m	30		6M§	100n	20	1.5m	5.0m	E		20 *	2.0u#	800n				AD	NPN	ADØ	PT2 Ø
94	OP843W	250m	30	50m	6C	100n	10	1.5m	5.0m	E			2.0u#		0.4	0.4m	5.0m		NPN		PT2g Ø
95	SD1440-002	75m	30		5C	100n	10	1.5m	5.0m	E		5.0	4.0u#	880n	300m†	400u	5.0m	AD	NPN	ABØ	PT11 Ø
96	SD1440-002L	75m	30		5C	100n	10	1.5m	5m	E		5	4.0u#	880n	300m†	400u	5.0m	AD	NPN	ABØ	PD93 Ø
97	VTT7224	50m	30	25m	48	100n	10	1.5m	5.0m	C		5.0	3.0u	850n	.25	1.0m	20m	AD	NPN		PD919
98	GS3020-2	50m	50	0.4m	6C	25n	30	1.5m	5.0m	E	825n	5.0	3.0u	825n	0.3	0.4m	5.0m	AD	NPN		PT109
99	K5100	250m	50	100u	68	25n	30	1.5m	5.0m	E	400n	5.0	4.0u#	900n	300m	400u	5.0m	AD	NPN	AK	PT109 Ø
100	STPT1520-2		50		6C	25n	30	1.5m	5.0m	E		5.0	4.0u#		300m	400u		AD	NPN	AB	PT109
101	ST1KL3A	150m	40	50m	3C	200n	10	1.5m	200 $	C		10	3.2u#	880n	400m	5.0m	2.0k$	AD	NPN	AB§	PT14e Ø
102	ST1KL3B	150m	40	50m	3C	200n	10	1.5m	200 $	C		10	3.2u#	880n	400m	5.0m	2.0k$	AD	NPN	ADØ	PT137 Ø
103	ST1KLA	150m	40	50m	3C	200n	10	1.5m	200 $	C		10	8.0u#	880n	400m	5.0m	2.0k$	AD	NPN	AB§	PT14e Ø
104	ST1KLB	150m	40	50m	3C	200n	10	1.5m	200 $	C		10	8.0u#	880n	400m	5.0m	2.0k$	AD	NPN	ADØ	PT137 Ø
105	BPX38I	330m	50	50m	5H§	200n	25	1.6m	20m	C		5.0	5.0u	870n	175m	2.0m	5.0m	AD	NPN	AD	PT18f Ø
106	BPX81-III	100m	32	50m	48%	200n	25	1.6m	1.0k*	C		5.0	6.0u	850n	150m†	480u	1.0k$	AD	NPN	AA	PT54 ☑
107	SFH305-3	75m	32	50m	48%	20n	35	1.6m	1.0k$	C		5.0	6.0u#	850n	150m	480u	1.0k$	AD	NPN		PT111 ☑
108	BPX38-IV	330m	50	50m	5H§	500n	25	1.6m	1.0k*	C		5.0	15u#	870n	140m	2.0m	5.0m	AD	NPN	AD	PT18f Ø
109	SDP8406-002	100m	30		48	100u	15	1.8m	1.0m	A	935n	5.0	8.0u#	880n	400m	400u	1.0m	AD	NPN	AA♦	PD89 ☑
110	SDP8426-002	100m	30		48	100u	30	1.8m	1.0m	A	935n	5.0	8.0u#	880n	400m†	400u	1.0m	AD	NPN	AA♦	PT89 ☑

SYMBOLS AND CODES EXPLAINED IN INTERPRETER

11. PHOTOTRANSISTORS - NPN (Cont'd)

IN ORDER OF: (1) TYPE (2) LIGHT CURRENT (3) Ee TEST & (4) TYPE NUMBER

LINE No.	[4] TYPE NUMBER	MAX. RATINGS @25°C PD (W)	[3] VCEO (V)	IC (A)	TEMP RNG. CODE - +	MAX. DARK CURR. ID @25°C (A)	VCE (V)	[2] MIN. LIGHT CURR. IL (A)	--TEST CONDITIONS- [3] Ee (W/cm2)	SRC	λ (m)	VCE (V)	RESP. TIME (s)	PEAK WAVE-LNTH. λp (m)	MAX SATURATION VOTLAGE VCE (SAT) (V)	IC TEST (A)	Ee TEST W/cm2	MAT	[1] TYPE CODE	LEAD CODE	DRAWING
1	BP103-III	300m	50	100m	48%	100n	30	1.8m	20m	C		5.0	7u#	850n	150m	2.5m	5.0m	AD	NPN	AD	PT34b Ø
2	VTM7124	50m			8 ♦	100m	10	2.0m				5.0	7.0u		0.6	1.8m		AD	NPN		PT113
3	SPT1	100m	40		29	1.0	10	2.0m			500n	10		830n				AD	NPN	A	TO-18 Ø
4	SPT2	100m	40		29	1.0	10	2.0m			500n	10		830n				AD	NPN	A	TO-18 Ø
5	SPT11	100m	40		29	1.0	10	2.0m			700n	10		900n				AD	NPN	A	TO-18 Ø
6	SPT12	100m	40		29	1.0	10	2.0m			750n	10		900n				AD	NPN	A	TO-18 Ø
7	SPT13	100m	40		29	1.0	10	2.0m			700n	10		900n				AD	NPN	A	TO-18 Ø
8	SPT14	100m	40		29	1.0	10	2.0m			750n	10		900n				AD	NPN	A	TO-18 Ø
9	SFH309F	165m	35	75m	5A%	60n	25	2.0m†	500u	C	950n	5.0	10u#	900n	130m†	250u	500u	AD	NPN	♦	PT121 Ø
10	STPT1830-3		10		6C	100n†	5.0	2.0m	1.0m	E		5.0	80u#		150m	400u		AD	NPN	AD	PT2ac
11	STPT2030-1		10		6C	100n†	5.0	2.0m	1.0m	E		5.0	40u#		150m	400u		AD	NPN	AD	PT38 Ø
12	FPT120B	200m	15	25m	58§	100n	5.0	2.0m	1.0m	C		5.0	18u#	850n	550m	1.0m	20m	AD	NPN	AD	PT21a
13	STPT120B	200m	15	25m	58	100n	5.0	2.0m	1.0m	C		5.0	18u#	800n	550m	1.0m	20m	AD	NPN	AD	PT21d
14	SDP8490-002				48	100n	15	2.0m	1.5m		880n	5.0	10u#		300m†	400u	1.5m	AD	NPN	♦	PT149 Ø
15	MRD3056	400m	30		6M§	100n	20	2.0m	5.0m	E		20 *	2.0u#	800n				AD	NPN	ADØ	PT2 Ø
16	OP593B	250m	30	50m	4A	100n	10	2.0m	5.0m	E	920n	5.0		850n	400m	400u	5.0m	AD	NPN	AB	PT149
17	OP802	250m	30	50m	6C	100n	10	2.0m	5.0m			5.0	5.0u#	850n	400m	400u	5.0m	AD	NPN	ADØ	PT2g Ø
18	OP842	250m	30	50m	6C	100n	10	2m	5.0m	E			2.0u#		0.4	0.4m	5.0m		NPN		PT2g Ø
19	OP844W	250m	30	50m	6C	100n	10	2.0m	5.0m	E			2.0u#		0.4	0.4m	5.0m		NPN		PT2g Ø
20	SD3443-003		30		5C	100n	10	2.0m	5.0m	E		5.0	8.0u#	850n	200m†	400u	10m	AD	NPN	AH♦	PT39 Ø
21	CLT4200	75m	40	200m		50u	10	2.0m	5.0m	C		5.0	3.0u	8.8k	300m	250u	20m	AD	NPN	AB	PH362
22	VTT1111	250m	40	200m	6M	500p†	20	2.0m	5.0m			5.0	5.0u#	775n	100m†	1.0m	20m		NPN	AD	PT2v
23	VTT3322	50m	50	25m	48	100n	20	2.0m	5.0m	C		5.0	2.0u	850n	.25	1.0m	20m	AD	NPN	A	PD975
24	VTT9012	200m	50			10n	5.0	2.0m	5.0m			5.0	4.0u	850n	150m†	1.0m	5.0m	AD	NPN	AD	PT36 Ø
25	VTT9111	200m	50			10n	5.0	2.0m	5.0m			5.0	2.0u	850n	150m†	1.0m	5.0m	AD	NPN	AD	PT21a
26	GS2020-5	50m	50		6C⊠	25n	30	2.0m	9.0m	E		5.0	2.5u	825n	300m	400u	9.0m	AD	NPN		PT23
27	OP642	50m	25		6C	100n	10	2.0m	20m	E		5.0	5.0u#	850n	400m	400u	20m	AD	NPN	AB	PT6b Ø
28	SD2440-002	125m	30		5C	100n	10	2.0m	20m	E		5.0	4.0u#	880n	300m†	400u	20m	AD	NPN	AB♦	PT6b Ø
29	1N5723	50m	50		6C⊠	25n	30	2.0m	20m	E		5.0	1.5u#	900n	150m	400u	20m	AD	NPN	AA	PT6f
30	GS1020-2	50m	50	0.4m	6C	25n	30	2.0m	20m	E	825n	5.0	3.0u	825n	0.3	0.4m	20m	AD	NPN	A	PT6g
31	MRD602	50m	50		6A§	25n	30	2.0m	20m	E	900n		1.5u#		130m†	500u	20m	AD	NPN	A	PT6 Ø
32	MRD612	50m	50		6C	25n	30	2.0m	20m	E	900n	5.0	1.5u#		.13 †	.5m	20m	AD	NPN	A	PT6f
33	OP602	50m	50		6C	25n	10	2.0m	20m	E		5.0	5.0u#	850n	400m	400u	20m	AD	NPN	AB	PT6b Ø
34	STPT62		50		6C	25n	30	2.0m	20m	E		5.0	1.5u#		150m†	400u	20m	AD	NPN	AB	PT6g
35	STPT1530-2		50		6C	100n	30	2.0m	20m	E		5.0	12u#		300m	400u		AD	NPN	AJ	PT71
36	TIL602	50m	50		6C	25n	30	2.0m	20m	E		5.0	8.0u#	900n	150m†	400u	20m	AD	NPN	AB	PT6b Ø
37	VTT7112	50m	30		48	100n	10	2.0m	100 *	C		5.0	4.0u*		0.4	1.0m			NPN	AB	PT113
38	VTT7123	50m	30		48	100n	10	2.0m	100 *	C		5.0	2.5u*		0.4	1.8m			NPN	AB	PT113
39	CEN810	150m	40	50m	3C	200n	10	2.0m	200 $	C	800n	10	5.0u*	800n	400m	5.0m	2.0k$		NPN	AB	PT142
40	PN109CL	100m	20	20m	28	2.0u	10	2.0m	500 $	C		10	5.0u#	900n	0.6	1.0m	1.0k$	AD	NPN	AB	PT14c
41	PN110	100m	20	20m	28	50n†	10	2.0m†	500 $			10	3.0u	800n	250m†	1.0m	1.0k$	AD	NPN	AD	PT21a
42	BPW14A	375m	32	50m	5H%	100n	20	2.0m	1.0k$	C	735n	32	1.6u#	780n	300m	100u	1.0k$	AD	NPN	ADØ	PT2b Ø
43	VTT7225	50m	30	25m	48	100n	10	2.3m	5.0m	C		5.0	4.0u	850n	.25	1.0m	20m	AD	NPN		PD919
44	STPT1820-4		50		6C	25n	30	2.4m	20m	E		5.0	16u#		300m	400u		AD	NPN	AD	PT2ac
45	BPX72F	180m	50	25m	C %	100	20	2.4m	4.7	C		5.0	6u#	800n				AD	NPN	AD♦	PT34a Ø
46	SDP8490-301				48	100n	15	2.5m	1.5m		880n	5.0	16u#		300m†	400u	1.5m	AD	NPN	♦	PT149 Ø
47	OP502B	80m	20		48	100n	10	2.5m	5.0m	E		5.0	3.0u#		0.4 †	0.5m	5.0m	AD	NPN	AC	None
48	VTT1013	250m	20	200m	6M	2.0n†	20	2.5m	5.0m			5.0	10u#	775n	100m†	1.0m	20m		NPN	AD	PT18
49	OP802W	250m	30	50m	6C	100n	10	2.5m	5.0m	E		5.0	10u#	850n	400m	400u	5.0m	AD	NPN	ADØ	PT18j Ø
50	OP845W	250m	30	50m	6C	100n	10	2.5m	5.0m	E			2.0u#		0.4	0.4m	5.0m		NPN		PT2g Ø
51	XC802W	250m	30		6C	100n	10	2.5m	5.0m	E		5.0			400m	400u	5.0m	AD	NPN	AD	PT18n Ø
52	CLT4160(1)	75m	40	200m	F §	50n	10	2.5m	5m	C		5.0	3u#	840n	.3	.25m	20m		NPN	AC	PT89b
53	PS401	100m	30	30m		0.2u	10	2.5m†	10m	C	800n	5.0	5.0u#	800n				AD	NPN		PD420 Ø
54	PT510(1)	75m	35		2C	10u	30	2.5m	10m	E		5.0	3.0u*	800n	200m†	1.0m	10m	AD	NPN	AD	PT2t Ø
55	PT501(1)	75m	45		2C	10u	30	2.5m	10m	E			3.0u*	800n	200m†	1.0m	10m	AD	NPN	AB	PT14b Ø
56	VTT9313	100m	20	50m	5A	5.0n†	20	2.5m	5.0	C		5.0	10u#	775n	100m†	1.0m	20m		NPN	AA	PT13 Ø
57	BPX81-IV	100m	32	50m	48%	200n	25	2.5m†	1.0k*	C		5.0	8.0u#	850n	150m†	1.2u	1.0k$	AD	NPN	AA	PT54 ⊠
58	BP103B2	200m	35	50m	5A%			2.5m†	1.0k*	C		5.0 *	7.5u#	850n	130m†	750n	1.0k$	AD	NPN	AA♦	PD232j Ø
59	BPX43-2	300m	50	50m	5C%	5.0m	5.0	2.5m	1.0k*	C		5.0 *	9.0u	870n	190m†	750n	1.0k$	AD	NPN	AD♦	TO-18 Ø
60	BP103-IV	300m	50	100m	5C§	100n	30	2.8m	20m	C		5.0	10u#	850n	150m	2.5m	5.0m	AD	NPN	AD	PT34b Ø
61	VTM3322	50m			8 ♦	100m	10	3.0m				5.0	4.0u		0.6	1.8m		AD	NPN		PD975
62	BPX95C1	100m	30	25m	XA§	100n	20	3.0m	1.0m		930n	5.0	3.0u	800n	0.4	2.0m	1.0m	AD	NPN	AA	PT83
63	PT550F	150m	35	100m	2C	1.0u	10	3.0m	1.0m	B		5.0	350u#	800n				AD	NPN	AD	PT2t Ø
64	MFOD200▼	250m	40	250m	5H§	25n	20	3.0m	1.0m		900n	20 *		810n				AD	NPN	AD	PT2 Ø
65	SDP8490-003				48	100n	15	3.0m	1.5m		880n	5.0	14u#		300m†	400u	1.5m	AD	NPN	♦	PT149 Ø
66	CLT2030	250m	30	200m	6F§	25n	10	3.0m	5.0m	C		5.0	3.0u		300m	10m	0	AD	NPN	ADØ	PT18 Ø
67	L14N1	600m	30	50m	5F	100n	10	3.0m	5.0m	E	880n	5.0	10u	880n	400m	800u	10m		NPN	AD	TO-18
68	OP593A	250m	30	50m	4A	100n	10	3.0m	5.0m	E	920n	5.0		850n	400m	400u	5.0m	AD	NPN	AB	PT149
69	SD1440-003	75m	30		5C	100n	10	3.0m	5.0m	E		5.0	8.0u#	880n	300m†	400u	5.0m	AD	NPN	AB⊠	PT11 Ø
70	SD1440-003L	75m	30		5C	100n	10	3.0m	5m	E		5	8.0u#	880n	300m†	400u	5.0m	AD	NPN	AB⊠	PD93 Ø
71	CLT2064	250m	50			50n	10	3.0m	5.0m	C		5.0							NPN		None
72	GS3020-3	50m	50	0.4m	6C	25n	30	3.0m	5.0m	E	825n	5.0	5.0u	825n	0.3	0.4m	5.0m	AD	NPN		PT109
73	STPT1520-3		50		6C	25n	30	3.0m	5.0m	E		5.0	8.0u#		300m	400u		AD	NPN	AB	PT109
74	SPS103	50m	20	0.1u	2A			3.0m†	10m			5.0		800n					NPN	AB	PD1061
75	PS201	150m	30	50m		200n	10	3.0m†	10m	C	800n	5.0	5.0u#	800n				AD	NPN		TO-18 Ø
76	BPW37	600m	45	50m	XF§	100n	10	3.0m	10m	E		5.0	8.0u#		400m	10m		AD	NPN	AD	PT2z
77	L14G2	600m	45	50m	6F§	100n	10	3.0m	10m	E		5.0	5.0u		400m	10m		AD	NPN	AD	PT2g Ø
78	OP702		25			100n	10	3.0m	20m	E		5.0	4.0u#	850n	400m	400u	20m	AD	NPN	AA	PT27 Ø
79	VTT1123	250m	30	200m	6M	500p†	20	3.0m	5.0	C		5.0	3.0u#	775n	150m†	1.0m	20m		NPN	AD	PT2v
80	VTT7124	50m	30		48	100n	10	3.0m	100 *	C		5.0	2.5u*		0.4	1.8m			NPN	AB	PT113
81	PN120S	50m	30		28	5.0n†	10	3.0m†	500 $			10	3.0u	800n					NPN	AB	PT47 Ø
82	BPW14B	375m	32	50m	5H%	100n	20	3.0m	1.0k$	C	735n	32	1.6u#	780n	300m	1.0m	1.0k$	AD	NPN	ADØ	PT2b Ø
83	BPY62-3	300m	32	100m	5C§	100n	25	3.2m	1.0k*	C		5.0 *	7.0u#	850n	300m	1.0m	5.0m	AD	NPN	AD♦	PT2p Ø
84	SDP8406-003	100m	30		48	100u	15	3.4m	1.0m	A	935n	5.0	8.0u#	880n	400m	400u	1.0m	AD	NPN	AA♦	PT89 ⊠
85	PN109L	150m	26	30m	28	2.0u	10	3.5m	100 $	C		10	5.0u#	900n	0.6	1.0m	500 $	AD	NPN		PT18n
86	VTT7113	50m	30		48	100n	10	3.5m	100 *	C		5.0	4.0u*		0.4	1.8m			NPN	AB	PT113
87	CLT2140	250m	40	200m	6F§	25n	10	3.6m	5.0m	C		5.0	3.0u		300m	10m	0	AD	NPN	ADØ	PT2 Ø
88	STPT310	250m	50		6M	25n	20	4.0m	800u			20 *	1.0u	800n				AD	NPN	ADØ	PT2m Ø
89	STPT2030-2		10		6C	100n†	5.0	4.0m	1.0m	E		5.0	60u#		150m	400u		AD	NPN	AD	PT38 Ø
90	VTT1132	250m	40	200m	6C	100n	10	4.0m	1.0m	C		5.0	10u	850n	0.4	1.0m	20m	AD	NPN		TO-18
91	GS4021-2	250m	30	50m	6C	100n	10	4.0m	5.0m	E	825n	5.0	4.0u	825n	0.2	0.4m	5.0m	AD	NPN	AD	PD1174
92	K5250	250m	30	100u	68	100n	10	4.0m	5.0m	E	400n	5.0	3.0u#	900m	300m	400u	5.0m	AD	NPN	AD	PT2g Ø
93	OP803	250m	30	50m	6C	100n	10	4.0m	5.0m			5.0	8.0u#	850n	400m	400u	5.0m	AD	NPN	ADØ	PT2g Ø
94	SD5443-002	150m	30		5C	100n	10	4.0m	5.0m	E		5.0	4.0u#	880n	200m†	400u	10m	AD	NPN	AH♦	PT38 Ø
95	VTT1112	250m	30	200m	6M	500p†	20	4.0m	5.0m			5.0	5.0u#	775n	100m†	1.0m	20m		NPN	AD	PT2v
96	VTT3123	50m	30	25m	6M	500p†	20	4.0m	5.0m	C		5.0	3.0u*	775n	150m†	1.0m	20m		NPN	AB	PT11 Ø
97	VTT3123E	50m	30	25m	C ♦	100n	10	4.0m	5.0m	C		5.0	4.0u		250m	1.0m		AD	NPN	AB	PT109
98	VTT3323	50m	30	25m	48	100n	20	4.0m	5.0m	C		5.0	3.0u	850n	.25	1.0m	20m	AD	NPN	A	PD975
99	VTT1032	250m	40	200m	6C	100n	10	4.0m	5.0m	C		5.0	10u	850n	0.4	1.0m	20m	AD	NPN		TO-18
100	MRD300	250m	50		6M§	25n	20	4.0m	5.0m	E			2.5u#					AD	NPN	ADØ	PT2a Ø
101	PS503	100m	30	20m		0.2u	10	4.0m†	10m	C	800n	5.0	5.0u#	800n				AD	NPN		PD1291 Ø
102	OP643	50m	25		6C	100n	10	4.0m	20m	E		5.0	8.0u#	850n	400m	400u	20m	AD	NPN	AB	PT6b Ø
103	SD2440-003	125m	30		5C	100n	10	4.0m	20m	E		5.0	8.0u#	880n	300m†	400u		AD	NPN	AB♦	PT6b Ø
104	1N5724	50m	50		6C⊠	25n	30	4.0m	20m	E		5.0	1.5u#	900n	150m	400u	20m	AD	NPN	AA	PT6f
105	BPX71-203	100m	50	20m	6F§	25n	30	4.0m	20m	C		5.0	3.0u#	800n	400m	400u	20m	AD	NPN	AB	PT6c Ø
106	GS1020-3	50m	50	0.4m	6C	25n	30	4.0m	20m	E	825n	5.0	5.0u	825n	0.3	0.4m	20m	AD	NPN	A	PT6g
107	K5150	250m	50	100u	68	25n	30	4.0m	20m	E	400n	5.0	4.0u#	900n	300m	400u	20m	AD	NPN	AK	PT6 Ø
108	MRD603	50m	50		6A§	25n	30	4.0m	20m	E	900n		1.5u#		130m†	500u	20m	AD	NPN	A	PT6 Ø
109	MRD613	50m	50		6C	25n	30	4.0m	20m	E	900n	5.0	1.5u#		.13 †	.5m	20m	AD	NPN	A	PT6f
110	OP603	50m	50		6C	25n	10	4.0m	20m	E		5.0	8.0u#	850n	400m	400u	20m	AD	NPN	AB	PT6b Ø

SYMBOLS AND CODES EXPLAINED IN INTERPRETER

11. PHOTOTRANSISTORS - NPN (Cont'd)

IN ORDER OF: (1) TYPE (2) LIGHT CURRENT (3) Ee TEST & (4) TYPE NUMBER

LINE No.	TYPE NUMBER	MAX. RATINGS @25°C PD (W)	VCEO (V)	IC (A)	TEMP RNG. CODE - +	MAX. DARK CURR. ID (A)	VCE (V)	MIN. LIGHT CURR. IL (A)	-TEST CONDITIONS- Ee (W/cm2)	SRC	λ (m)	VCE (V)	RESP. TIME (s)	PEAK WAVE-LNTH. λp (m)	MAX SATURATION VOTLAGE VCE (SAT) (V)	IC TEST (A)	Ee TEST W/cm2	MAT	TYPE CODE	LEAD CODE	DRAWING
1	SPX3034	50m	50		6F%	250n	30	4.0m	20m			5.0	10u#		300m	400u	20m	XX	NPN	AA§	PD25a Ø
2	STPT63		50		6C	25n	30	4.0m	20m	E		5.0	1.5u#		150m†	400u	20m	AD	NPN	AB	PT6g
3	STPT1530-3		50		6C	100n	30	4.0m	20m	E		5.0	20u#		300m	400u		AD	NPN	AJ	PT71
4	STPT1630-2		50		6C	100n	30	4.0m	20m	E		5.0	4.0u#		300m	400u		AD	NPN	AB	PT6e
5	TIL603	50m	50		6C	25n	30	4.0m	20m	E		5.0	8.0u#	900n	150m†	400u	20m	AD	NPN	AB	PT6b Ø
6	BP103B3	200m	35	50m	5A%			4.0m†	1.0k*	C		5.0 *	10u#	850n	140m†	1.2u	1.0k$	AD	NPN	AA♦	PD232j Ø
7	BPX25	300m	50	200m	C §	100n	24	4m	1.0k$	G		6.0	3.0u#	800n				AD	NPN	AD	PT2aa Ø
8	BPX43-III	300m	50	50m	5C%	8.0m	5.0	4.0m	1.0k*	C		5.0	12u#	870n	230m†	1.2u	1.0k$	AD	NPN	AD♦	TO-18 Ø
9	SFH303	200m	50	50m	5A%	50n	10	4.0m	1.0k*			5.0	15u#	850n	140m	2.0m	1.0k$	AD	NPN		PT1 Ø
10	BPW96A	100m	70	100m	2A%	200n	20	4.5m	1.0m		950n	5.0	4.0u#	830n	300m	1.0m	1.0m	AD	NPN	AD	PT83 Ø
11	VTT7125	50m	30		48	100n	10	4.5m	100 *	C			2.5u*			1.8m			NPN	AB	PT113
12	PS302	100m	30	30m		0.2u	10	5.0m†	1.0m	C	800n	5.0	5.0u#	800n				AD	NPN		PD28b Ø
13	PT410(1)	100m	35		28	1.0u	10	5.0m	1.0m	E		5.0	60u	800n				AD	NPN	AB	PT82 Ø
14	BPW22A2	100m	50	25m	5A%	100n	30	5m	1.0m		800n	5.0	3.0u	800n	.40	1.0m	1.0m	AD	NPN	♦	PT105 Ø
15	SDP8490-302				48	100n	15	5.0m	1.5m		880n	5.0	16u#		300m†	400u	1.5m	AD	NPN	♦	PT149 Ø
16	OP598B	250m	30	50m	4A	100n	10	5.0m	5.0m	E	920n	5.0		850n	400m	400u	5.0m	AD	NPN	AB	PT149a
17	OP843	250m	30	50m	6C	100n	10	5m	5.0m	E			2.0u#		0.4	0.4m	5.0m		NPN		PT2g Ø
18	TIL81HR2	250m	30	50m	6C	100n	10	5.0m	5.0m	E		5.0	8.0u#	900n	200m†	2.0m	20m	AD	NPN	ADØ	PT2g Ø
19	VTT9013	200m	30			100n	5.0	5.0m	5.0m			5.0	10u	850n	150m†	1.0m	5.0m	AD	NPN	AD	PT36 Ø
20	GS2020-6	50m	50		6CØ	25n	30	5.0m	9.0m	E		5.0	2.5u	825n	300m	400u	9.0m	AD	NPN		PT23
21	GS4123-1	250m	30	50m	6C	50n	5.0	5.0m	20m	E	825n	5.0	8.0u	825n	0.2	0.4m	20m	AD	NPN	AD	TO-18
22	K5554		30			100n	10	5.0m	20m	E		5.0	3.0u#		400m	400u	20m	AD	NPN	AB	PD574
23	VTT7114	50m	30		48	100n	10	5.0m	100 *	C		5.0	4.0u*		0.4	1.8m			NPN	AB	PT113
24	BPW14C	375m	32	50m	5H%	100n	20	5.0m	1.0k$	C	735n	32	1.6u#	780n	300m	1.0m	1.0k$	AD	NPN	ADØ	PT2b Ø
25	BPY62-4	300m	32	50m	5F%	100n	25	5.0m	1.0k$	C		5.0	9.0u#	850n	140m†	1.5m	1.0k$	AD	NPN	AC♦	PT2p Ø
26	SFH309	165m	35	75m	5A%	60n	25	5.0m†	1.0k$			5.0	10u#	880n	200m	2.0m	0 $	AD	NPN	♦	PT121 Ø
27	2B50B(2)	250m	30	100m	5C	100n	5.0	6.0m	100u		940n	5.0	11u#	850n	300m	1.0m	1.0m	AD	NPN	AJ	TO-18
28	PS101	150m	30	50m		200n	10	6.0m†	1.0m	C	800n	5.0	5.0u#	800n				AD	NPN		PT14b Ø
29	L14N2	600m	30	50m	5F	100n	10	6.0m	5.0m	E	880n	5.0	14u	880n	400m	1.6m	10m		NPN	AD	TO-18
30	SD1440-004	75m	30		5C	100n	10	6.0m	5.0m	E		5.0	16u#	880n	300m†	400u	5.0m	AD	NPN	ABØ	PT11 Ø
31	SD1440-004L	75m	30		5C	100n	10	6.0m	5m	E		5	16u#	880n	300m†	400u		AD	NPN	ABØ	PD93 Ø
32	VTT3324	50m	30	25m	48	100n	20	6.0m	5.0m	C		5.0	4.0u	850n	.25	1.0m	20m	AD	NPN	A	PD975
33	OT400-6		35		6C	40n	10	6.0m	5.0m	E		5.0	5.0u		500m	1.0m		AD	NPN		PT153
34	OT400-6L		35		6C	40n	10	6.0m	5.0m	E		5.0	5.0u		500m	1.0m		AD	NPN		PT154
35	GS3020-4	50m	50	0.4m	6C	25n	30	6.0m	5.0m	E	825n	5.0	7.0u	825n	0.3	0.4m	5.0	AD	NPN		PT109
36	STPT1520-4		50		6C	25n	30	6.0m	5.0m	E		5.0	16u#		300m	400u		AD	NPN	AB	PT109
37	VTT9112	200m	50			10n	5.0	6.0m	5.0m			5.0	4.0u	850n	150m†	1.0m	5.0m	AD	NPN	AD	PT21a
38	MT1	200m	30	40m	5C	20n	5.0	6.0m	10m	E	900n	5.0	2.0u#	850n	500m	2.0m	10m	AD	NPN	AD	PT18a Ø
39	BPW36	600m	45	50m	XF§	100n	10	6.0m	10m	E		5.0	8.0u#		400m	10m		AD	NPN	AD	PT2z
40	L14G1	600m	45	50m	6F§	100n	10	6.0m	10m	E		5.0	5.0u		400m	10m		AD	NPN	AD	PT2g Ø
41	PN108CL	100m	20	20m	28	200n	10	6.0m†	500 $			10	5.0u#	900n	300m†	1.0m	1.0k$	AD	NPN	A	PT14c
42	BP103B4	200m	35	50m	5A%			6.3m†	1.0k*	C		5.0 *	10u#	850n	150m†	1.9u	1.0k$	AD	NPN	AA♦	PD232j Ø
43	BPX43-IV	300m	50	100m	5C%	13m	5.0	6.3m†	1.0k*	C		5.0	15u#	870n	280m†	1.9u	1.0k$	AD	NPN	AD♦	TO-18 Ø
44	SDP8406-004	100m	30		48	100u	15	6.4m	1.0m	A	935n	5.0	8.0u#	880n	400m	400u	1.0m	AD	NPN	AA♦	PT89 Ø
45	K5256		30			100n	10	7.0m	5.0m	E		5.0	3.0u#		300m	400u	5.0m	AD	NPN	AD	PT2g Ø
46	OP804	250m	30	50m	6C	100n	10	7.0m	5.0m			5.0	10u#	850n	400m	400u	5.0m	AD	NPN	ADØ	PT2g Ø
47	OP844	250m	30	50m	6C	100n	10	7m	5.0m	E			2.0u#		0.4	0.4m	5.0m		NPN		PT2g Ø
48	SDP8405-002	60m	30		48	100u	15	7.0m	5.0m	E		5.0	10u#	880n	300m†	400u	20m	AD	NPN	AA♦	PT31c Ø
49	SDP8425-002	60m	30		48	100u	15	7.0m	5.0m	A	935n	5.0	10u#	880n	300m†	400u	10m	AD	NPN	AA♦	PT31c Ø
50	CLT2065	250m	40			50n	10	7.0m	5.0m	C		5.0							NPN		None
51	CLT2164	250m	50		F §	50n	10	7.0m	5.0m			5.0	3.0u#		350m	10m	0	AD			PT155
52	OP644	50m	25		6C	100n	10	7.0m	20m	E		5.0	10u#	850n	400m	400u	20m	AD	NPN	AB	PT6b Ø
53	SD2440-004	125m	30		5C	100n	10	7.0m	20m	E		5.0	14u#	880n	300m†	400u		AD	NPN	AB♦	PT6b Ø
54	1N5725	50m	50		6CØ	25n	30	7.0m	20m	E		5.0	1.5u#	900n	150m	400u	20m	AD	NPN	AA	PT6f
55	BPX71-204	100m	50	20m	6C%	25n	30	7.0m	20m	C		5.0	3.0u#	800n	150m†	400u	20m	AD	NPN	♦	PT6c Ø
56	GS1020-4	50m	50	0.4m	6C	25n	30	7.0m	20m	E	825n	5.0	7.0u	825n	0.3	0.4m	20m	AD	NPN	A	PT6g
57	MRD604	50m	50		6A§	25n	30	7.0m	20m	E	900n		1.5u#		130m†	500u	20m	AD	NPN	A	PT6 Ø
58	MRD614	50m	50		6C	25n	30	7.0m	20m	E	900n	5.0	1.5u#		.13 †	.5m	20m	AD	NPN	A	PT6f
59	OP604	50m	50		6C	25n	10	7.0m	20m	E		5.0	10u#	850n	400m	400u	20m	AD	NPN	AB	PT6b Ø
60	STPT64		50		6C	25n	30	7.0m	20m	E		5.0	1.5u#		150m†	400u	20m	AD	NPN	AB	PT6g
61	TIL604	50m	50		6C	25n	30	7.0m	20m	E		5.0	8.0u#	900n	150m†	400u	20m	AD	NPN	AB	PT6b Ø
62	TIL604HR2	50m	50		6C	25n	30	7.0m	20m	E		5.0	8.0u#	900n	150m†	400u	20m	AD	NPN	AB	PT6b Ø
63	CLT2150	250m	40	200m	6F§	25n	10	7.2m	5.0m	C		5.0	3.0u		300m	10m	0	AD	NPN	ADØ	PT2 Ø
64	BPW77B	250m	70	50m	5C%	100n	20	7.5m	1.0m		950n	5.0	3.5u#	800n	300m	1.0m	1.0m	AD	NPN	AD	PT46 Ø
65	BPW96B	100m	70	100m	2A%	200n	20	7.5m	1.0m		950n	5.0	4.0u#	830n	300m	1.0m	1.0m	AD	NPN	AD	PT83 Ø
66	SDP8490-303				48	100n	15	7.5m	1.5m		880n	5.0	16u#		300m†	400u	1.5m	AD	NPN	♦	PT149 Ø
67	OP598A	250m	30	50m	4A	100n	10	7.5m	5.0m	E	920n	5.0		850n	400m	400u	5.0m	AD	NPN	AB	PT149a
68	MT8020	200m	30	40m	5A	50n	10	7.5m†	10m	A	900n	30	2.5u#	800n	400m	1.6m	10m	AD	NPN	AB	PD89 Ø
69	SPT3	100m	40		3C	1.0	10	8.0m			500n	10		830n				AD	NPN	A	TO-18 Ø
70	SPT4	100m	40		3C	1.0	10	8.0m			500n	10		830n				AD	NPN	A	TO-18 Ø
71	STPT2030-3		10		6C	100n†	5.0	8.0m	1.0m	E		5.0	80u#		150m	400u		AD	NPN	AD	PT38 Ø
72	L14P1	600m	30	50m	5F§	6.0n†	10	8.0m	1m			5	10u#	880n	.4	.8m	2m		NPN	AD	PT2z
73	VTT1133	250m	40	200m	6C	100n	10	8.0m	1.0m	C		5.0	15u	850n	0.4	1.0m	20m	AD	NPN		TO-18
74	VTT1113	250m	20	200m	6M	2.0n†	20	8.0m	5.0m			5.0	10u#	775n	100m†	1.0m	20m		NPN	AD	PT2v
75	GS4021-3	250m	30	50m	6C	100n	10	8.0m	5.0m	E	825n	5.0	5.0u	825n	0.2	0.4m	5.0m	AD	NPN	AD	PD1174
76	SD5443-003	150m	30		5C	100n	10	8.0m	5.0m	E		5.0	6.0u#	880n	200m†	400u	10m	AD	NPN	AH♦	PT38 Ø
77	VTT1033	250m	40	200m	6C	100n	10	8.0m	5.0m	C		5.0	15u	850n	0.4	1.0m	20m	AD	NPN		TO-18
78	GS2020-7	50m	50		6CØ	25n	30	8.0m	9.0m	E		5.0	2.5u	825n	300m	400u	9.0m	AD	NPN		PT23
79	STPT1630-3		50		6C	100n	30	8.0m	20m	E		5.0	8.0u#		300m	400u		AD	NPN	AB	PT6e
80	VTT3325	50m	30	25m	48	100n	20	9.0m	5.0m	C		5.0	5.0u	850n	.25	1.0m	20m	AD	NPN	A	PD975
81	BPX95C2	100m	30	25m	XA§	100n	20	10m	1.0m		930n	5.0	3.0u	800n	0.4	2.0m	1.0m	AD	NPN	AA	PT83
82	BPW77A	250m	70	50m	5C%	100n	20	10m	1.0m	C	950n	5.0	3.5u#	800n	300m	1.0m	1.0m	AD	NPN	ADØ	PT46 Ø
83	GS2020-8	50m	50		6CØ	25n	30	10m	9.0m	E		5.0	2.5u	825n	300m	400u	9.0m	AD	NPN		PT23
84	PS504	100m	30	20m		0.2u	10	10m†	10m	C	800n	5.0	5.0u#	800n				AD	NPN		PD1382 Ø
85	TPS601	150m	30	50m	3C	500n	30	10m	10m			3.0	2.0u#		500m	5.0m	10m	AD	NPN	AA	PD7c Ø
86	TPS604	150m	30	50m	3C	500n	30	10m	10m			3.0	2.0u#	800n	500m	50m	10m	AD	NPN	AD	PT34d Ø
87	K5504		30			100n	15	10m	20m	E		5.0	3.0u#		300m	400u	20m	AD	NPN	AA	PD33g
88	OP500SLD	50m	30		48	100n	15	10m	20m	E		5.0	3.0u#	850n	500m	250u	20m	AD	NPN	AA	PT31 Ø
89	OP501SLD	80m	30		48	100n	10	10m	20m	E		5.0			0.4	500u	20m	Si	NPN	AB	PD257d
90	OP550SLD	50m	30		48	100n	10	10m	20m	E		5.0			400m	250u	20m	AD	NPN	AA	PT69a
91	XC500D	80m	30		48	100n	10	10m	20m	E		5.0			400m	500u	20m	AD	NPN	A	PD16aj
92	L14P2	600m	30	50m	5F§	10n†	10	11m	1m			5	14u#	880n	.4	1.6m	2m		NPN	AD	PT2z
93	BP103B-II	210m	35	100m	58%	100n	30	11m	20m	C		5.0	10u#	850n				AD	NPN	AA	PD232f
94	2B50C	250m	30	100m	5C	100n	5.0	12m	100u		940n	5.0	13u#	850n	300m	1.0m	1.0m	AD	NPN	AJ	TO-18
95	CLT2160	250m	30	200m	6F§	25n	10	12m	5.0m	C		5.0	3.0u		300m	10m	0	AD	NPN	ADØ	PT2 Ø
96	SDP8405-003	60m	30		4C	100u	15	12m	5.0m	E		5.0	12u#	880n	300m†	400u	20m	AD	NPN	AA♦	PT31c Ø
97	VTT9113	200m	30			100n	5.0	12m	5.0m			5.0	10u	850n	150m†	1.0m	5.0m	AD	NPN	AD	PT21a
98	MT2	200m	30	40m	5C	20n	5.0	12m	10m	E	900n	5.0	2.0u#	850n	500m	2.0m	10m	AD	NPN	AD	PT2f Ø
99	L14G3	600m	45	50m	6F§	100n	10	12m	10m	E		5.0	5.0u		400m	10m		AD	NPN	AD	PT2g Ø
100	STPT1630-4		50		6C	100n	30	12m	20m	E		5.0	12u#		300m	400u		AD	NPN	AB	PT6e
101	RTC879	100m	7.0	25m	5A%			14m	20m	C		5.0	6u#	800n	0.4	2.0m	20m	AD	NPN	B	None
102	BPX43-II	330m	50	100m	5H§	200n	25	14m	20m	C		5.0	6.0u	870n	175m	2.0m	5.0m	AD	NPN	AD	PT2p Ø
103	BPW71	100m	30	150m	C §	100n	10	15m	1.0m	C		5.0	300u#	800n	1.1	5m		AD	NPN		None
104	BPW96C	100m	70	100m	2A%	200n	20	15m	1.0m		950n	5.0	4.0u#	830n	300m	1.0m	1.0m	AD	NPN	AD	PT83 Ø
105	VTT1114	250m	20	200m	6C	100n	10	15m	5.0m	C		5.0	8.0u	850n	0.4	1.0m	20m	AD	NPN		TO-18
106	GS4021-4	250m	30	50m	6C	100n	10	15m	5.0m	E	825n	5.0	7.0u	825n	0.2	0.4m	5.0m	AD	NPN	AD	PD1174
107	K5258		30			100n	10	15m	5.0m	E		5.0	3.0u#		300m	400u	5.0m	AD	NPN	AD	PT2g Ø
108	OP805	250m	30	50m	6C	100n	10	15m	5.0m			5.0	10u#	850n	400m	400u	5.0m	AD	NPN	ADØ	PT2g Ø
109	OP845	250m	30	50m	6C	100n	10	15m	5.0m	E			2.0u#		0.4	0.4m	5.0m		NPN		PT2g Ø
110	CLT2165	250m	40		F §	50n	10	15m	5.0m			5.0	3.0u#		350m	10m	0	AD			PT155

SYMBOLS AND CODES EXPLAINED IN INTERPRETER

11. PHOTOTRANSISTORS - NPN (Cont'd)

IN ORDER OF: (1) TYPE (2) LIGHT CURRENT
(3) Ee TEST & (4) TYPE NUMBER

LINE No.	4 TYPE NUMBER	MAX. RATINGS @25°C PD (W)	3 VCEO (V)	IC (A)	TEMP RNG. CODE - +	MAX. DARK CURR. ID @25°C (A)	VCE (V)	2 MIN. LIGHT CURR. IL (A)	--TEST CONDITIONS- 3 Ee (W/cm2)	SRC	λ (m)	VCE (V)	RESP. TIME (s)	PEAK WAVE-LNTH. λp (m)	MAX SATURATION VOTLAGE VCE (SAT) (V)	IC TEST (A)	Ee TEST W/cm2	MAT	1 TYPE CODE	LEAD CODE	DRAWING
1	GS2020-9	50m	50		6CØ	25n	30	15m	9.0m	E		5.0	2.5u	825n	300m	400u	9.0m	AD	NPN		PT23
2	PS502	60m	30	20m		0.2u	10	15m†	10m	C	800n	5.0	5.0u#	800n				AD	NPN		PD1110 Ø
3	K5552		30			100n	10	15m	20m	E		5.0	3.0u#		400m	400u	20m	AD	NPN	AB	PD574
4	PN107(1)	150	20	30m	4C	2.0u	10	15m	100 $	C	900n	10	6.0u*	900n	600m	1.0m	500 $		NPN	AB	PT14a Ø
5	PN108(1)	150	20	30m	4C	2.0u	10	15m	100 $	C	900n	10	6.0u*	900n	600m	1.0m	500 $		NPN	AD	PT2ab
6	SD5443-004	150m	30		5C	100n	10	16m	5.0m	E		5.0	8.0u#	880n	200m†	400u	10m	AD	NPN	AH♦	PT38 Ø
7	OP500SLC	50m	30		48	100n	15	17m	20m	E		5.0	4.0u#	850n	500m	250u	20m	AD	NPN	AA	PT31 Ø
8	OP501SLC	80m	30		48	100n	10	17m	20m	E		5.0			0.4	500u	20m	Si	NPN	AB	PD257d
9	OP550SLC	50m	30		48	100n	10	17m	20m	E		5.0			400m	250u	20m	AD	NPN	AA	PT89a
10	XC500C	80m	30		48	100n	10	17m	20m	E		5.0			400m	500u	20m	AD	NPN	A	PD16aj
11	BP103B-III	210m	35	100m	58%	100n	30	18m	20m	C		5.0	10u#	850n				AD	NPN	AA	PD232f
12	PT550(2)	150m	35	100m	2C	100n	10	20m†	100u	B			350u#	800n				AD	NPN	AD	PT2u Ø
13	LPT500(A)	100m	30	100m	58%	2.0n†	5.0	20m†	500u	C		5.0	2.8u#	880n	260m†	2.0m	5.0m	AD	NPN	AA	PD1142 Ø
14	GS4123-2	250m	30	50m	6C	50n	5.0	20m	20m	E	825n	5.0	10u	825n	0.2	0.4m	20m	AD	NPN	AD	TO-18
15	OP598C	250m	30	50m	4A	100n	10	25m	5.0m	E	920n	5.0		850n	400m	400u	5.0m	AD	NPN	AB	PT149a
16	K5502		30			100n	15	25m	20m	E		5.0	3.0u#		300m	400u	20m	AD	NPN	AA	PD33g
17	OP500SLB	50m	30		48	100n	15	25m	20m	E		5.0	4.0u#	850n	500m	250u	20m	AD	NPN	AA	PT31 Ø
18	OP501SLB	80m	30		48	100n	10	25m	20m	E		5.0			0.4	500u	20m	Si	NPN	AB	PD257d
19	OP550SLB	50m	30		48	100n	10	25m	20m	E		5.0			400m	250u	20m	AD	NPN	AA	PT89a
20	XC500B	80m	30		48	100n	10	25m	20m	E		5.0			400m	500u	20m	AD	NPN	A	PD16aj
21	STPT260Q		50		4A	25n	10	27m	5.0m	E		5.0	18u#		300m	400u	20m	AD	NPN	AD	PT18b Ø
22	BP103B-IV	210m	35	100m	58%	100n	30	28m	20m	C		5.0	10u#	850n				AD	NPN	AA	PD232f
23	GS4123-3	250m	30	50m	6C	50n	5.0	30m	20m	E	825n	5.0	15u	825n	0.2	0.4m	20m	AD	NPN	AD	TO-18
24	OP500SLA	50m	30		48	100n	15	40m	20m	E		5.0	5.0u#	850n	500m	250u	20m	AD	NPN	AA	PT31 Ø
25	OP501SLA	80m	30		48	100n	10	40m	20m	E		5.0			0.4	500u	20m	Si	NPN	AB	PD257d
26	OP550SLA	50m	30		48	100n	10	40m	20m	E		5.0			400m	250u	20m	AD	NPN	AA	PT89a
27	XC500A	80m	30		48	100n	10	40m	20m	E		5.0			400m	500u	20m	AD	NPN	A	PD16aj
28	GS4123-4	250m	30	50m	6C	50n	5.0	50m	20m	E	825n	5.0	20u	825n	0.2	0.4m	20m	AD	NPN	AD	TO-18
29	MFOD2202▼	150m	40		6C	25n	20	250m					2.5u#	800n				AD	NPN		TO-206AØ
30	PN109F	150m	26	30m	28	2.0u	10	0.3	100 $	C		10	8.0u#	900n	0.6	1.0m	1.0k$	AD	NPN	AD	PT79
31	TPS606	50m	20	20m		100n	10	500m	10m	E		3.0	200u	725n	400m	200u	10m	AD	NPN	AK	PD331 Ø
32	PN127	50m	20	20m	28	100n	10	0.8	1.0k$	C		10	2.5u	800n				AD	NPN	AB	PD914
33	CLT2130	250m	50	200m	6F§	25n	10	1.8	5.0m	C		5.0	3.0u		350m	10m	0	AD	NPN	ADØ	PT2 Ø
34	PN115	100m	20	10m	28	20m†	10	2.0	1.0k$	C		10	5.0u	900n	.60	1.0m	1.0k$	AD	NPN	AC	PD211
35	PN147	50m	20	20m	28	0.5u	10	3.0	2.0 $	C		10	3.0u	800n				AD	NPN	AB	PD914
36	PN111W	100m	20	10m	28	50n†	10	6.0 †	500 $			10	5.0u#	900n	300m†		1.0k$	AD	NPN	AH	PT56
37	BPY62-2	300m	32	50m	5F%	100n	25	9.0	20m	C		5.0	5.0u#	850n	300m	1.0m	5.0m	AD	NPN	AD♦	PT2p Ø
38	PT501A	75m	45	10m	2C	1.0u		10 †	10m										NPN		TO-18

For your high-reliability semiconductor needs, try D.A.T.A.'s quarterly MILITARY ELECTRONIC DEVICES GUIDE.

SYMBOLS AND CODES EXPLAINED IN INTERPRETER

IN ORDER OF: (1) TYPE (2) LIGHT CURRENT (3) Ee TEST & (4) TYPE NUMBER

LINE No.	4 TYPE NUMBER	MAX. RATINGS @25°C PD (W)	VCEO (V)	IC (A)	TEMP RNG. CODE - +	MAX. DARK CURR.@25°C ID (A)	VCE (V)	2 MIN. LIGHT CURR. IL (A)	-TEST CONDITIONS-- 3 Ee (W/cm2)	SRC	λ (m)	VCE (V)	RESP. TIME (s)	PEAK WAVE-LNTH. λp (m)	MINIMUM DC CURRENT GAIN hFE	VCE (V)	IC (A)	MAT	1 TYPE CODE	LEAD CODE	DRAWING
PHOTODARLINGTON, NPN																					
4	GS3030-1																	AD	NPN		PT109
5	GS3030-2																	AD	NPN		PT109
6	GS3030-3																	AD	NPN		PT109
7	CLI840	250m	30	100n	5F	100n	10						150n					AD	NPN		PS132d
8	CLI850	250m	30	100n	5F	100n	10						150n					AD	NPN		PS132d
9	CLI860	250m	30	100n	5F	100n	10						150n					AD	NPN		PS132d
10	CLI870	250m	30	100n	5F	100n	10						150n					AD	NPN		PS132d
11	GFOD1B1▼	150m	30	100m	58	100n	10						45n					AD	NPN	AB	PT115
12	GFOD1B2▼	150m	30	100m	58	100n	10						45n					AD	NPN	AB	PT115
13	MFOD73	150m	60	10m	48	100n	10				100n		125u	820n				AD	NPN	AB	PT129
14	MFOD300▼	250m	40	250m	5H§	250m	10		56m$				40u#	810n				AD	NPN	AD	PT2 Ø
15	SD1410-001L	75m	15		5C	250n	10	600n	200u	E		5.0	15u#	880n				AD	NPN	DBØ	PD93 Ø
16	PT1CL3	100m	20	20m	27	1.0u†	10	5.0u	200 $	C		5.0		800n				AD	NPN	AB	PT47c Ø
17	PT7L	100m	20	20m	26	1.0u†	10	5.0u	200 $	C		5.0		800n				AD	NPN	AB	None
18	PT1MLA	100m	25	20m	29	1.0u†	10	5.0u	200 $	C		5.0		800n				AD	NPN	AB§	PT138 Ø
19	PT1MLB	100m	25	20m	29	1.0u†	10	5.0u	200 $	C		5.0		800n				AD	NPN	ADØ	PT139 Ø
20	PT1KLB	150m	30	20m	2C	1.0u†	10	5.0u	200 $	C		5.0		800n				AD	NPN	ADØ	PT137 Ø
21	PT23F	150m	30	20m	2A	1.0u†	10	5.0u	200 $	C		5.0		800n				AD	NPN	AB	None
22	PT-SKLT	100m	30	20m	3C	1.0u†	10	5.0u	200 $	C		5.0		800n				AD	NPN	ABØ	PT141 Ø
23	CLR4180	75m	40	200m	F §	200n	10	0.1m	.1	C		5.0	100u#	780n	1	.25	20m	AD	NPN	AC	PT89b
24	PN268	100m	20	30m	28	500n	10	100u	2.0 $	C		10	150u#	800n				AD	NPN	AB	PD322b
25	PN202S	100m	20	30m	28	500n	10	200u		C		10	150u	800n				AD	NPN	AB	PT47 Ø
26	VTA1021	250m	50	50m	6M	3.0n†	20	250u	200u			5.0	100u#	775n				AD	NPN	DG	PT18
27	VTA9321	100m	50	50m	5A	30n†	20	250u	200u	C		5.0	100u#	775n				AD	NPN	DA	PT13 Ø
28	VTA7121	50m	30	25m	48	100n	10	0.4m	.25m	C		5.0	30u	850n				AD	NPN		PD919
29	K9000	50m	15	100u	68	100u	10	500u	500u	E	400n	5.0	20u#	900n				AD	NPN	AA	PT31b
30	OP530	50m	15	47		100n	10	500u	500u	E		5.0	20u#	850n				AD	NPN	AB	PT31 Ø
31	LPD80A(A)	100m	30		4A%	100n	10	500u	500u	B	950n	5.0						AD	NPN	AA	PD1399 Ø
32	LPD80(A)	100m	30		4A			500u	1.0m			2.0	5.0u#	810n				AD	NPN	AA	PD1141 Ø
33	2N5777	200m	25	250m	6A§	100n	12	500u	2.0m	E		5.0	250u#	850n	1.0k	5.0	2.0m	AD	NPN	AC	PT1 Ø
34	MEL11	200m	30	150m	5A%	100n	5.0	500u	2.0m	E		5.0	100u#	900n	10k			AD	NPN	AD	PT21 Ø
35	PN207	100m	20	30m	28	0.1u	10	0.5m	2.0 $	C		10	200u	800n				AD	NPN	AB	PD914
36	STPD1510-1		10		67	1.0u	10	600u	200u	E		5.0	15u#	820n				AD	NPN	AB	PT109
37	SD1410-001	75m	15		5C	250n	10	600u	200u	E		5.0	15u#	880n				AD	NPN	DBØ	PD93a Ø
38	CLR2050	250m	40	200m	6F§	100n	10	600u	200u	C		5.0	100u#					AD	NPN	ADØ	PT18 Ø
39	STPD1810-1		10		67	1.0u	10	600u	2.0m	E		5.0	15u#	820n				AD	NPN	AD	PT2ac
40	SD3410-001	150m	15		5C	250n	10	600u	2.0m	E		5.0	15u#	880n				AD	NPN	ES♦	PT39a Ø
41	CLR4185	75m	40	200m	F §	200n	10	600u	.1	C		5.0	100u#	780n	1	.25	20m	AD	NPN	AC	PT89b
42	VTA1022	250m	40	50m	6M	3.0n†	20	750u	200u			5.0	100u#	775n				AD	NPN	DG	PT18
43	VTA9322	100m	40	50m	5A	30n†	20	750u	200u	C		5.0	100u#	775n				AD	NPN	DA	PT13 Ø
44	VTA7122	50m	30	25m	48	100n	10	0.8m	.25m	C		5.0	60u	850n				AD	NPN		PD919
45	OP300	50m	15		67	1.0u	10	800u	1.0m	E		5.0	40u#	850n				AD	NPN	AB	PT6b Ø
46	OP301		15	100u		250n	10	800u	1.0m			5.0	40u#					AD	NPN	AB	PT6b Ø
47	OPC300		30	100u		250n	10	800u	1.0m	E		5.0		850n				AD	NPN	EQ	PT125 *
48	ZM100(2)	300m	35	250m	4F	1.0u	10	800u	2.0 *	C		10	400u#	850n				AD	NPN	AD	PT9a Ø
49	FD511	100m	20	30m	38	1.0u	10	1.0m	0.1m	C	800n	5.0	400u#	800n				AD	NPN		PD1113 Ø
50	PN208	100m	20	30m	28	0.5u	10	1.0m	0.1m§			10	100u#	800n				AD	NPN	AB	PD915
51	L14F2	600m	25	200m	6F§	100n	12	1.0m	200u	E		5.0	300u#	850n				AD	NPN	AD	PT2g Ø
52	VTA1121	250m	40	50m	6M	3.0n†	20	1.0m	200u			5.0	100u#	775n				AD	NPN	DG	PT2v
53	VTA3121	50m	40	25m	6M	3.0n†	10	1.0m	200u	C		5.0	100u#	775n				AD	NPN	DB	PT11 Ø
54	VTA1011	250m	50	200m	6M	3.0n†	20	1.0m	200u			5.0	300u#	775n				AD	NPN	DG	PT18
55	VTA9311	100m	50	50m	5A	30n†	20	1.0m	200u	C		5.0	300u#	775n				AD	NPN	DA	PT13 Ø
56	VTA3121E	50m		25m	48	100n	10	1.0m	.25m	C		5.0	50m	850n				AD	NPN	A	PD975
57	VTA3321	50m	30	25m	48	100n	10	1.0m	.25m	C		5.0	50u	850n				AD	NPN	A	PD975
58	STPD1610-1		10		67	1.0u	10	1.0m	1.0m	E		5.0	15u#	820n				AD	NPN	AB	PT6d Ø
59	GS1030-1	50m	15	1.0m	67	250n	10	1.0m	1.0m	E	825n	5.0	15u	825n				AD	NPN	A	PT6g
60	MII68004(A)		15			250n	10	1.0m	1.0m	E		5.0	20u	825n				AD	NPN		PT148
61	OP538F	50m	15		48	225n	5.0	1.0m	1.0m			5.0						AD	NPN	AA	PT97 Ø
62	SD2410-001	125m	15		5C	250n	10	1.0m	1.0m	E		5.0	15u#	850n				AD	NPN	DB♦	PT6e Ø
63	SDP8106-001	100m	15		48	250n	10	1.0m	1.0m	A	935n	5.0	75u#					AD	NPN	AB♦	PT89 Ø
64	MEL12	200m	40	150m	5A%	100n	5.0	1.0m	2.0m	E		5.0	100u#	900n	10k			AD	NPN	AD	PT21 Ø
65	K9010	250m	30	100u	68	100u	10	1.0m	20m	E	400n	5.0	20u#	900n				AD	NPN	AB	PT110
66	CLR2060	250m	40	200m	6F§	100n	10	1.4m	200u	C		5.0	100u#					AD	NPN	ADØ	PT18 Ø
67	VTA7123	50m	30	25m	48	100n	10	1.6m	.25m	C		5.0	150u	850n				AD	NPN		PD919
68	OP302		15	100u		250n	10	1.8m	1.0m			5.0	40u#					AD	NPN	AB	PT6b Ø
69	PH103	100m	30	50m	XA§	400n	10	2.0m		C		2.0		860n				AD	NPN	AB	PT151
70	STPD2010-1		10		67	1.0u	10	2.0m	200u	E		5.0	15u#	820n				AD	NPN	AD	PT38 Ø
71	SD1410-002	75m	15		5C	250n	10	2.0m	200u	E		5.0	25u#	880n				AD	NPN	DBØ	PD93a Ø
72	SD1410-002L	75m	15		5C	250n	10	2.0m	200u	E		5.0	25u#	880n				AD	NPN	DBØ	PD93 Ø
73	SD5410-001	150m	15		5C	250n	10	2.0m	200u	E		5.0	15u#	880n				AD	NPN	ES♦	PT38a Ø
74	STPD1510-2		15		67	250n	10	2.0m	200u	E		5.0	25u#	820n				AD	NPN	AB	PT109
75	VTA1023	250m	30	50m	6M	10n†	20	2.0m	200u			5.0	100u#	775n				AD	NPN	DG	PT18
76	VTA9323	100m	30	50m	5A	30n†	20	2.0m	200u	C		5.0	100u#	775n				AD	NPN	DA	PT13 Ø
77	CLR2170	250m	40	200m	6F§	100n	10	2.0m	200u	C		5.0	100u#	850n				AD	NPN	ADØ	PT18 Ø
78	CLR5101	50m	40	200m	6F§	100n	10	2.0m	200u	C		5.0	150u#					AD	NPN		PT11 Ø
79	CLR5101-2	50m	40	200m	6F§	100n	10	2.0m	200u	C		5.0	150u#					AD	NPN		PT109
80	K9001	50m	15	100u	68	100u	10	2.0m	500u	E	400n	5.0	20u#	900n				AD	NPN	AA	PT31b
81	SD3410-002	150m	15		5C	250n	10	2.0m	2.0m	E		5.0	25u#	880n				AD	NPN	ES♦	PT39a Ø
82	STPD1810-2		15		67	250n	10	2.0m	2.0m	E		5.0	25u#	820n				AD	NPN	AD	PT2ac
83	107-2	100m	20	30m	07	10u	5.0	2.0m	2.0m	E		5.0	100u#					AD	NPN	ES	PT69 Ø
84	BPW38	600m	25	200m	XF§	100n	12	3.0m	200u	E		5.0	300u#	850n				AD	NPN	DG	PT2z
85	L14F1	600m	25	200m	6F§	100n	12	3.0m	200u	E		5.0	300u#	850n				AD	NPN	AD	PT2g Ø
86	VTA1122	250m	30	50m	6M	3.0n†	20	3.0m	200u	C		5.0	100u#	775n				AD	NPN	DG	PT2v
87	VTA1012	250m	40	200m	6M	3.0n†	20	3.0m	200u			5.0	300u#	775n				AD	NPN	DG	PT18
88	VTA9312	100m	40	50m	5A	30n†	20	3.0m	200u	C		5.0	300u#	775n				AD	NPN	DA	PT13 Ø
89	VTA3122E	50m		25m	48	100n	10	3.0m	.25m	C		5.0	100u	850n				AD	NPN	A	PD975
90	VTA3322	50m	30	25m	48	100n	10	3.0m	.25m	C		5.0	100u	850n				AD	NPN	A	PD975
91	GS1030-2	50m	15	1.0m	67	250n	10	3.0m	1.0m	E	825n	5.0	20u	825n				AD	NPN	A	PT6g
92	SD2410-002	125m	15		5C	250n	10	3.0m	1.0m	E		5.0	25u#	850n				AD	NPN	DB♦	PT6e Ø
93	STPD1610-2		15		67	250n	10	3.0m	1.0m	E		5.0	25u#	820n				AD	NPN	AB	PT6d Ø
94	MRD370	250m	40		6M§	100n	10	3.0m	2.0m	E		5.0	15u#					AD	NPN	DG	PT2a Ø
95	BPX99	330m	32	500m	5C	200n	20	3.0m	100 $	C	750n		80u#	800n				AD	NPN	ADØ	PT2 Ø
96	PT410F		35	50m	28	1.0u	10	3.3m	1.0m	C		5.0	60u	850n				AD	NPN		PT100
97	OP303		15	100u		1.0u	10	3.6m	1.0m			5.0	40u#					AD	NPN	AB	PT6b Ø
98	PH101	100m	20	50m	X8§	500n	15	4m	§	C		2.0		850n				AD	NPN	AA	PT60a Ø
99	PD502(1)	60m	20	20m		1.0u	10	4.0m†	10u	C	800n	5.0	150u#	800n				AD	NPN		PD1110 Ø
100	PD401(1)	100m	20	30m		1.0u	10	4.0m†	0.1m	C	800n	5.0	150u#	800n				AD	NPN		PD420 Ø
101	PD503(1)	100m	20	30m		1.0u	10	4.0m†	100u	C	800n	5.0	150u#	800n				AD	NPN		PD1291 Ø
102	SD1410-003	75m	15		5C	250n	10	4.0m	200u	E		5.0	75u#	880n				AD	NPN	DBØ	PD93a Ø
103	SD1410-003L	75m	15		5C	250n	10	4.0m	200u	E		5.0	75u#	880n				AD	NPN	DBØ	PD93 Ø
104	SD5410-002	150m	15		5C	250n	10	4.0m	200u	E		5.0	25u#	880n				AD	NPN	ES♦	PT38a Ø
105	STPD1510-3		15		67	250n	10	4.0m	200u	E		5.0	75u#	820n				AD	NPN	AB	PT109
106	STPD2010-2		15		67	250n	10	4.0m	200u	E		5.0	25u#	820n				AD	NPN	AD	PT38 Ø
107	VTA3122	50m	30	25m	6M	3.0n†	10	4.0m	200u	C		5.0	100u#	775n				AD	NPN	DB	PT11 Ø
108	CLR2180	250m	40	200m	6F§	100n	10	4.0m	200u	C		5.0	100u#	850n				AD	NPN	ADØ	PT18 Ø
109	VTA1111	250m	40	200m	6M	3.0n†	20	4.0m	200u			5.0	300u#	775n				AD	NPN	DG	PT2v
110	K9002	50m	15	100u	68	100u	10	4.0m	500u	E	400n	5.0	20u#	900n				AD	NPN	AA	PT31b

SYMBOLS AND CODES EXPLAINED IN INTERPRETER

12. PHOTODARLINGTON - NPN (Cont'd)

IN ORDER OF: (1) TYPE (2) LIGHT CURRENT
(3) Ee TEST & (4) TYPE NUMBER

LINE No.	4 TYPE NUMBER	MAX. RATINGS @25°C PD (W)	VCEO (V)	IC (A)	TEMP RNG. CODE - +	MAX. DARK CURR.@25°C ID (A)	VCE (V)	2 MIN. LIGHT CURR. IL (A)	-TEST CONDITIONS-- 3 Ee (W/cm2)	SRC	λ (m)	VCE (V)	RESP. TIME (s)	PEAK WAVE-LNTH. λp (m)	MINIMUM DC CURRENT GAIN hFE	VCE (V)	IC (A)	MAT	1 TYPE CODE	LEAD CODE	DRAWING
1	OP830W	250m	15			1.0u	10	4.0m	500u	E		5.0	40u#	850n				AD	NPN	ADØ	PT18j Ø
2	SD3410-003	150m	15		5C	250n	10	4.0m	2.0m	E		5.0	75u#	880n				AD	NPN	ES♦	PT39a Ø
3	STPD1810-3		15		67	250n	10	4.0m	2.0m	E		5.0	75u#	820n				AD	NPN	AD	PT2ac
4	MRD711	150m	60		4A§	100n	10	5m	500u		940n	5	125 #					AD	NPN	AB	PD1024
5	TPS605	50m	25	20m	27	500n	10	5.0m	1.0m	E		3.0	200u#	725n				AD	NPN	AK	PD331 Ø
6	L14R1	150m	30		5A§	100n	25	5.0m	1.0m	E		5.0	45u#	875n				AD	NPN	AB	PT110
7	PD201(1)	150m	20	50m		1.0u	10	6.0m†	0.1m	C	800n	5.0	150u#	800n				AD	NPN		TO-18 Ø
8	GS1030-3	50m	15	1.0m	67	250n	10	6.0m	1.0m	E	825n	5.0	25u	825n				AD	NPN	A	PT6g
9	SD2410-003	125m	15		5C	250n	10	6.0m	1.0m	E		5.0	75u#	850n				AD	NPN	DB♦	PT6e Ø
10	STPD1610-3		15		67	250n	10	6.0m	1.0m	E		5.0	75u#	820n				AD	NPN	AB	PT6d Ø
11	OP304		15	100u		1.0u	10	7.0m	1.0m			5.0	40u#					AD	NPN	AB	PT6b Ø
12	SD1410-004	75m	15		5C	250n	10	8.0m	200u	E		5.0	125u#	880n				AD	NPN	DB⊠	PD93a Ø
13	SD1410-004L	75m	15		5C	250n	10	8.0m	200u	E		5.0	125u#	880n				AD	NPN	DB⊠	PD93 Ø
14	SD5410-003	150m	15		5C	250n	10	8.0m	200u	E		5.0	75u#	880n				AD	NPN	ES♦	PT38a Ø
15	STPD1510-4		15		67	250n	10	8.0m	200u	E		5.0	125u#	820n				AD	NPN	AB	PT109
16	STPD2010-3		15		67	250n	10	8.0m	200u	E		5.0	75u#	820n				AD	NPN	AD	PT38 Ø
17	VTA1013	250m	30	200m	6M	10n†	20	8.0m	200u			5.0	300u#	775n				AD	NPN	DG	PT18
18	VTA9313	100m	30	50m	5A	30n†	20	8.0m	200u	C		5.0	300u#	775n				AD	NPN	DA	PT13 Ø
19	SD3410-004	150m	15		5C	250n	10	8.0m	2.0m	E		5.0	125u#	880n				AD	NPN	ES♦	PT39a Ø
20	STPD1810-4		15		67	250n	10	8.0m	2.0m	E		5.0	125u#	820n				AD	NPN	AD	PT2ac
21	PH107		30	50m	4A%	400n	10	10m		C		2						AD	NPN	AB	PT89c
22	PS4502	100m	30	40m	28	400n	10	10m										BC	NPN	AT	PH349
23	FPT850	100m	30	30m	5A	100n	5.0	10m	0.5m	A	900n	1.5	100u#	850n				AD	NPN	AA	PD608a
24	TPS607	75m	30	50m	28	250n	16	10m	1.0m	D		3.0	200u	700n		1.2	2.0m	AD	NPN	AB	PT101
25	107-3	100m	25	100m	07	10u	5.0	10m	2.0m	E		5.0	20u#					AD	NPN	ER	PT69 ⊠
26	CLCR784		35			100n	10	10m	5.0m	C		5.0	150u#		10k†	10			NPN	♦	PT159 ⊠
27	K9011	250m	30	100u	68	100u	10	10m	20m	E	400n	5.0	20u#	900n				AD	NPN	AB	PT110
28	MRD360	250m	40		6M§	100n	10	12m	2.0m	E		5.0	40u#					AD	NPN	DG	PT2a Ø
29	OP305		15	100u		1.0u	10	14m	1.0m			5.0	40u#					AD	NPN	AB	PT6b Ø
30	PD101(2)	150m	20	50m		1.0u	10	15m†	10u	C	800n	5.0	150 #	800n				AD	NPN		PT14b Ø
31	VTA1112	250m	30	200m	6M	3.0n†	20	15m	200u			5.0	300u#	775n				AD	NPN	DG	PT2v
32	K9020	250m	15	100u	68	1.0p	10	15m	500u	E	400n	5.0	20u#	900n				AD	NPN	AD	PT2g Ø
33	OP830	250m	15			1.0u	10	15m	500u	E		5.0	40u#	850n				AD	NPN	ADØ	PT2g Ø
34	K9021	250m	15	100u	68	1.0p	10	20m	500u	E	400n	5.0	20u#	900n				AD	NPN	AD	PT2g Ø
35	K9022	250m	15	100u	68	1.0p	10	30m	500u	E	400n	5.0	20u#	900n				AD	NPN	AD	PT2g Ø
36	K9012	250m	30	100u	68	100u	10	30m	20m	E	400n	5.0	20u#	900n				AD	NPN	AB	PT110
37	MFOD2302	150m	40		6C			250m					40u#	100u				AD	NPN	AD	PD105la
38	SPDT1	300m	25		29	1.0	5.0	5.0			500n	5.0		830n				AD	NPN		TO-18 Ø
39	SPDT2	100m	25		29	1.0	5.0	5.0			500n	5.0		830n				AD	NPN		PD608 ⊠
40	SPDT3	150m	25		29	1.0	10	5.0			500n	5.0		830n				AD	NPN		PD18a Ø
41	SPDT4	150m	30		29	1.0	25	5.0			500n	5.0		830n				AD	NPN		PD608 ⊠
42	PD302(1)	100m	20	30m		1.0u	10	12 †	10u	C	800n	5.0	150u#	800n				AD	NPN		PD28b Ø
43	PD504	100m	20	30m		1.0u	10	15 †	100u	C	800n	5.0	150u#	800n				AD	NPN		PD1382 Ø

Our 1987 TRANSISTOR REPLACEMENT & ALTERNATE SOURCE GUIDE cross-references devices from over 230 vendors.

SYMBOLS AND CODES EXPLAINED IN INTERPRETER

13. PHOTOTHYRISTORS - Light Activated SCR (LASCR)

IN ORDER OF: (1) TYPE (2) IT(RMS) MAX (3) TEMP (4) VDRM MAX & (5) TYPE No.

LINE No.	TYPE NUMBER	MAXIMUM RATINGS @ 25°C IT(RMS) (A)	@ T (°C)	VDRM Δ-VRRM (V)	ITSM (A)	TEMP RNG. CODE - +	MIN. IRRADIANCE TO TRIGGER EE W/cm2	S R C	λ TEST (m)	VAK TEST (V)	MAX IDRM Δ-IRRM @VDRM @MAX T (A)	MAX. TURN OFF TIME TQ (s)	IT TEST (A)	MAX. IGT @ 25°C (A)	MAX. VGT @ 25°C (V)	MAX. IH @ 25°C (A)	TYPE CODE	LEAD CODE	DRAWING
LIGHT ACTIVATED SCR (LASCR)																			
4	BPX66P(1)	150m$		70		6F§	1.5m		800n	70		450u			500m	10u	LASCR	KH	PT46 Ø
5	S12MD1	0.2	25	400		3A					1.0u						LASCR		None *
6	S12MD3	0.2	25	400		3A					1.0u						LASCR		None *
7	S22MD1	0.2	25	600		3A					1.0u						LASCR		None *
8	S22MD3	0.2	25	600		3A					1.0u						LASCR		None *
PHOTO TRIAC DRIVER																			
12	MRD730(A)			400	1.2	4A	15m	E		50	100n			100m		100u	PHTDVR		PT133
13	MRD3010	100m		250	1.2	47	1.0m†	E		3.0	100n					100u†	PHTDVR	♦	TO-18
14	MRD3011	100m		250	1.2	47	.50m†	E		3.0	100n					100u†	PHTDVR	♦	TO-18
15	MRD740(A)	125m	25	200		4A	5.0m	E		50	150u						PHTDVR	KF	PT133

NEW . . . from D.A.T.A. Three all-new volumes bring you connectors and capacitors from around the world.

SYMBOLS AND CODES EXPLAINED IN INTERPRETER

IN ORDER OF: (1) CKT. FUNCTION CODE (2)O/P VOLT-Vo (3)O/P IMPED-Zo & (4)TYPE No.

LINE No.	4 TYPE NUMBER	1 CIRCUIT FUNCTION CODE	OUTPUT 2 VOLT Vo @25°C (V)	OUTPUT 3 IMPED. @ 25°C Zo (Ω)	OUTPUT IMPED. @ 25°C f (Hz)	TEMP RNG. CODE - +	RATED SUP. VOLT ΔVs Pk-Pk (V)	RATED SUP. CURR. ΔIs Pk-Pk (A)	DESCRIPTION	SCHE-MATIC	DRAWING
PHOTOCIRCUIT, CAMERA CONTROLLER											
4	ULN3330D	30	15			47	5	8m	Contain Photodiode Low Level Amp Level Det VR	BE75	PH305
5	ULN3330T	30	15			47	5	8m	Contain Photodiode Low Level Amp Level Det VR	BE75	PH306
PHOTOCIRCUIT, OP-AMP-OUTPUT											
9	539-01-1	31				07	30	3.0m	Optical Det;Diode Re 30mV/uW;Diode Area 0.8mm sq	BE2	PH12c
10	539-01-5	31				07	30	3.0m	Optical Det;Diode Re 30mV/uW;Diode Area 5.0mm sq	BE2	PH12d
11	539-003-1	31				07	30	3.0m	Optical Det;Diode Re 30mV/uW;Diode Area 0.8mm sq	BE2	PH12c
12	539-003-5	31				07	30	3.0m	Optical Det;Diode Re 30mV/uW;Diode Area 5.0mm sq	BE2	PH12d
13	539-005-1	31				07	30	3.0m	Optical Det;Diode Re 30mV/uW;Diode Area 0.8mm sq	BE2	PH12c
14	539-005-5	31				07	30	3.0m	Optical Det;Diode Re 30mV/uW;Diode Area 5.0mm sq	BE2	PH12d
15	MDA7705	31					30		Responsivity 12mV/uW at 905nm;BW11MHz;tr30ns	BE37	PH118a Ø
16	MDA7705SMA	31					45		905nm pk typ;FO;Re12kV/W;BW 11MHz;NEP 2.0pW/Hz 1/2	BE37	PH118c
17	MDA7708	31					30		Responsivity 4.0mV/uW at 905nm;BW40MHz;tr9ns	BE37	PH118a Ø
18	MDA7708SMA	31					45		905nm pk typ;FO;Re4.0kV/W;BW 40MHz;NEP 3.0pW/Hz 1/2	BE37	PH118c
19	OT150D	31				07	15	10m	High Level Threshold .019 mw/cmcm max;tr,tf 500ns	BE83	PH341 Ø
20	OT151D	31				07	15	10m	High-Level Threshold .019 mw/cmcm Max;tr,tf 500ns	BE82	PH339 Ø
21	OT160D	31				07	15	10m	High-Level Threshold .019 mw/cmcm max;tr,tf 500ns	BE83	PH341 Ø
22	OT161D	31				07	15	10m	High-Level Threshold .019 mw/cmcm max;tr,tf 500ns	BE82	PH339 Ø
23	SD100-41-11-231	31				07	36		Red/IR W/Preamp Act. Dia .100 GBW 26Mhz.	None	PH123
24	SD100-42-12-231	31				07	36		Blue/Vis. W/Preamp Act. Dia .100 GBW 26Mhz.	None	PH123
25	SD100-43-13-231	31				07	36		U.V. Detector/Preamp .100Act.Dia 26Mhz BW	None	PH123
26	SD444-41-11-261	31				2 ♦	36		Red/IR W/Preamp .444 Act Dia.	None	PH123b
27	SD444-42-12-261	31				2 ♦	36		Blue/Vis. W/Preamp .444 Act Dia.	None	PH123b
28	SD444-43-13-261	31				07	36		U.V. Detector/Preamp .444Act.Dia 26Mhz BW	None	PH123b
29	SD444-44-12-263	31				2 ♦	30		Photometric W/Hybrid Amp Ultra Low NEP and Drift	None	PH123b
30	SD444-44-22-263	31				2 ♦	30		Photometric W/Hybrid Amp. Wide BW	None	PH123b
31	SD444-45-12-263	31				2 ♦	30		Red Photopic W/Hybrid Amp Ultra Low NEP and Drift	None	PH123b
32	SD444-45-22-263	31				2 ♦	30		Red Photopic W/Hybrid Amp. Wide BW	None	PH123b
33	SD444-46-12-263	31				2 ♦	30		Radiometric W/Hybrid Amp Ultra Low NEP and Drift	None	PH123b
34	SD444-46-22-263	31				2 ♦	30		Radiometric W/Hybrid Amp. Wide BW	None	PH123b
35	SD10041-21-231	31				07	36		Detector/Preamp Hook-up;Gain-Bandwidth 20MHz	None	PH123
36	SD10041-22-231	31				07	36		Detector/Preamp Hook-up;Gain-Bandwidth 20MHz	None	PH123
37	SD44441-21-261	31				07	36		Detector/Preamp Hook-up;Gain-Bandwidth 20MHz	None	PH123b
38	UDT020D	31				07	18	5m	Detector/Amplifier	BE77	PH315
39	UDT020UV	31				07	18	5m	Detector/Amplifier	BE77	PH315
40	UDT055UV	31				07	18	5m	Detector/Amplifier	BE16a	PH316
41	UDT451	31				07	18	2.5m	Detector/Amplifier;Bandwidth-3dB 70KHz	BE71	None
42	UDT452	31				07	18	2.5m	Detector/Amplifier; Bandwidth-3dB 70KHz	None	PH269
43	UDT455	31				07	30		Responsivity(850n) .35 A/W;350nm-1100nm	BE64	PH123a
44	UDT455HS	31				07	18		Detector Amplifier;Active Area 5.1mm2	BE16a	PH269
45	UDT455UV	31				07	18	4m	Detector Amplifier;Active Area 5.1mm2	BE16a	PH269
46	UDT555D	31					18	4m	Detector Amplifier;Active Area 1cm2	BE16a	PH269
47	UDT555UV	31				07	18	5m	Detector/Amplifier	BE16a	PH269
48	OSI5E	31		5.0		07	40	1.3m	Responsivity 20mV/lux Typ,BW 3.0kHz min	None	PH17j Ø
49	HFD1060	31		10		07	24	14m	Re 10kV/W(850nM);fop 1.2GHz	BE98	PH322
50	HFD1100	31		10		07	24	14m	Re 10kV/W(633nM);fop 1.2GHz	BE98	PH322
51	DDK528P	31		20	40M		12	5.0m	Photo Det;Responsivity 75mV/uW;Rise Time 15ns	BE22	PH76 ⊠
52	830(1)	31		25		15	15	4.0m	Single IR-Eye Passive Sensing Module	BE94	PH344
53	831	31		25		15	15	4.0m	Dual IR-Eye Passive Sensing Module	BE94	PH344
54	MDA431SMA	31		50	0	27	15	8.0m	905nm pk typ;FO;Re52kV/W;BW 1.0MHz NEP3.0pW/Hz 1/2	BE37a	PH118b
55	MDA435SMA	31		50	0	27	15	8.0m	905nm pk typ;FO;Re10.5kV/W;BW 5.0MHz;NEP5.0pW/Hz1/2	BE37a	PH118b
56	MDA438SMA	31		50	0	27	15	8.0m	905nm pk typ;FO;Re3.5kV/W;BW 15MHz;NEP 7.0pW/Hz 1/2	BE37a	PH118b
57	R7500	31		50			40	15m	Receiver;Responsivity 10mV/uW at 905nm;tr60ns	BE39	None
58	R7550	31		50			45	15m	Receiver;Responsivity 160mV/uW at 905nm;tr60ns	BE38	None
59	R7800	31		50			40	15m	Receiver;Responsivity 3.0mV/uW at 905nm;tr20ns	BE39	None
60	404(3)♦	31		75		5C	30	7.0m	200nm-20um;Respons 11kV/W;Pin 500mW	BE42	TO-99
61	404CM♦	31		75		5C	30	7.0m	200nm-20um;Respons 100kV/W;Diam 2.0mm	BE43	TO-99
62	406(2)	31		75		5C	15	100m	2.0um-15um;Response 425V/W;Diam 2.0mm	BE59	TO-5
63	408(2)	31		75		5C	15	2.0m	2.0um-15um;Response 60kV/W;Diam 2.0mm	BE60	TO-5
64	HAD1100A	31		80		07	30	10m	WL400-1100nM;Ibias 200pA;GBP 20MHz	BE96	PH322
65	P1-31	31		100		07	30	4.0m	Overall Response 50V/Wmin at 632nm;Area 0.8mm sq	BE47	PH123
66	P1-32	31		100		07	30	4.0m	Overall Response 25V/Wmin at 632nm;Area 3.1mm sq	BE47	PH123
67	P1-33	31		100		07	30	4.0m	Overall Response 25V/Wmin at 632nm;Area 7.1mm sq	BE47	PH123
68	P1-35	31		100		07	30	4.0m	Overall Response 13V/Wmin at 632nm;Area 2.0mm sq	BE47	PH123
69	P1-41	31		100		07	30	6.0m	FET;BW3.0MHz;Re 10kv/W at 632nm;Act Dia 1mm	BE47	PH123
70	P1-42	31		100		07	30	6.0m	FET;BW3.0MHz;Re 5kv/W at 632nm;Act Dia 2mm	BE47	PH123
71	P1-43	31		100		07	30	6.0m	FET;BW3.0MHz;Re 5kv/W at 632nm;Act Dia 3mm	BE47	PH123
72	P1-45	31		100		07	30	6.0m	FET;BW3.0MHz;Re 2.5kv/W at 632nm;Act Dia 5mm	BE47	PH123
73	UDT450	31		100		2A	30	3.0m	Responsivity (850n) .55 max A/W	BE16	PH70 Ø
74	UDT500D	31		100		78	30	3.0m	Responsivity(850n) .30 max A/W;BW 1MHz	BE16	PH71 Ø
75	HUV1100BQ	31		250		07	36	50m	WL185-1150n(900nM peak) f 5MHz	BE96	PH322
76	TCN1000-3	31		250		07	18	800u	Ultra low Noise Photodiode w/Amp 0-140hz	BE79	PH321
77	TCN1000-12	31		250		07	18	800u	Ultra low Noise Photodiode w/Amp 0-18hz	BE79	PH321
78	TCN1000-93	31		250		07	18	800u	Ultra low Noise Photodiode w/Amp 0-600hz	BE79	PH321
79	HAV4000A	31		500		07	30	2.2m	WL350-1150nm;NEP(900,20,1)93fW/Hz 1/2;PV444	BE18	PH72 ⊠
80	HUV2000B	31		500		07	36	2.2m	WL185-1150n(900nM peak) f 100kHy	None	None
81	HUV4000B	31		500		07	36	2.2m	WL185-1150n(900nM peak) f 100kHy	BE97	PH323
82	MDA431	31		500	0	27	15	8.0m	Responsivity 52mV/uW at 905nm;BW1.0MHz;Range 75dB	BE37a	PH118 Ø
83	MDA435	31		500	0	27	15	8.0m	Responsivity 10.5mV/uW at 905nm;BW5.0MHz;Range 75dB	BE37a	PH118 Ø
84	MDA438	31		500	0	27	15	8.0m	Responsivity 3.5mV/uW at 905nm;BW15MHz;Range 75dB	BE37a	PH118 Ø
85	R7880	31		500	0		45	15m	Receiver;Responsivity 40mV/uW at 905nm;tr18ns	BE38	None
86	R7900	31		500	0		40	15m	Receiver;Responsivity 2.0mV/uW at 905nm;tr6.0ns	BE39	None
87	407(2)	31		20k		15	15	40u	Thermally Compensated PEIR Detector	BE89	TO-5
88	414(1)	31		20k		04	15	40u	Dual PEIR Detector w/Source Follower	BE90	TO-5
89	419	31		20k		15	15	80u	Dual PEIR Detector w/Source Follower	BE91	TO-5
90	421(2)	31		20k		15	15	200u	Parallel Dual PEIR Detector w/Internal Amplifier	BE92	TO-5
91	429(1)	31		20k		15	15	40u	2 Channel PEIR Detector w/Source Followers	BE93	TO-5
92	519(2)	31		20k		15	15	80u	Dual PEIR Detector w/Source Follower	BE91	TO-5
93	5210	31		20k		15	15	200u	Parallel Dual PEIR Detector w/Internal Amplifier	BE92	TO-5
94	40623(1)	31		20k		4A	15	40u	IR PEDetector w/Source Follower	BE88	TO-5
95	404VM♦	31		30k		5C	15	200u	200nm-20um;Respons 500V/W;Diam 2.0mm	BE44	TO-99
96	420(3)	31		5.0T		5C			Pyroelectric Laser Detector for UV/VIS/IR	BE87	TO-5
97	DDV325	31	1.5m	50	10M		16	12m	360-1150nm;Re 160mV/uW min;NEP(905nm)5.0pW/Hz 1/2	BE22	PH76 ⊠
98	SD9007(A)	31	20m				18		Detector w/PreAmp;BW10kHz;2MHz avail;940nm	None	TO-5

SYMBOLS AND CODES EXPLAINED IN INTERPRETER

IN ORDER OF: (1) CKT. FUNCTION CODE (2)O/P VOLT-Vo (3)O/P IMPED-Zo & (4)TYPE No.

LINE No.	4 TYPE NUMBER	1 CIRCUIT FUNCTION CODE	OUTPUT 2 VOLT Vo @25°C (V)	3 IMPED. @ 25°C Zo (Ω)	f (Hz)	TEMP RNG. CODE	RATED SUP. VOLT ΔVs Pk-Pk (V)	CURR. ΔIs Pk-Pk (A)	DESCRIPTION	SCHE-MATIC	DRAWING
1	R1001	31	2.0				14	35m	Dig Rcvr;Resp(905nm):72mV/uW;Rate 1.0Mb/s max	BE28	PH110 Ø
2	R1001SMA	31	2.0				14	35m	FO Dig Rcvr;Resp(905nm):72mV/uW;Rate 1.0Mb/s max	BE28	PH110a Ø
3	R1101	31	2.0				14	35m	Dig Rcvr;Resp(905nm):36mV/uW;Rate 2.0Mb/s max	BE28	PH110 Ø
4	R1101SMA	31	2.0				14	35m	FO Dig Rcvr;Resp(905nm):36mV/uW;Rate 2.0Mb/s max	BE28	PH110a Ø
5	R1201	31	2.0				14	35m	Dig Rcvr;Resp(905nm):18mV/uW;Rate 4.0Mb/s max	BE28	PH110 Ø
6	R1201SMA	31	2.0				14	35m	FO Dig Rcvr;Resp(905nm):18mV/uW;Rate 4.0Mb/s max	BE28	PH110a Ø
7	C30919E	31	2.0	50		47	12	10m	400nm-1100nm;40MHz BW Rec;Avalanche Detector	BE62	PH47a
8	C30815	31	3.0	50		47	24		400nm-1.1nm;P.N Photodefector,Hybrid Preamp	BE7	PH48a Ø
9	C30816	31	3.0	50		47	24		400nm-1.1nm;P.N Photodefector,Hybrid Preamp	BE7	PH48a Ø
10	OSI1JHSA	31	4.0	20		07	12	24m	UV Region,BW5.0MHz min,tr50ns max	BE40	PH12b
11	OSI1KHSA	31	4.0	20		07	6.0	24m	Visible Region;Responsivity 5.0mV/uW/Sq cm,tr50ns	BE40	PH12b
12	OSI1LHSA	31	4.0	20		07	16	24m	IR Region,BW5.0MHz min,tr50ns max	BE40	PH12b
13	509-01	31	10	100m	100	07	20	4.0m	.35-1.12m;A,Resp 40kV/W.	BE1	PH12c
14	509-1	31	10	100m	100	07	20	800u	.35-1.12m;A,Resp 400kV/W.	BE1	PH12c
15	509-10	31	10	100m	100	07	20	800u	.35-1.12m;A,Resp 4.0mV/W.	BE1	PH12c
16	509-50	31	10	100m	100	07	20	800u	.35-1.12m;A,Resp 20mV/W.	BE1	PH12c
17	OSI5J	31	12	75	5.0k	07	30	1.3m	Hyb Recvr;Max Resp UV;tr30us;Re 30mV/uW at 253nm	None	PH17f Ø
18	OSI5K	31	12	75	5.0k	07	30	1.3m	Hyb Recvr;Max Resp Vis;tr30us;Re 60mV/uW at 425nm	None	PH17f Ø
19	OSI5L	31	12	75	5.0k	07	30	1.3m	Hyb Recvr;Max Resp IR;tr30us;Re 150mV/uW at 1.0um	None	PH17f Ø
20	529-01-1	31	20				30	2.0m	Optical Det;Diode Re 600mA/W;Diode Area 0.8mm sq	BE2	PH12c
21	529-01-5	31	20				30	2.0m	Optical Det;Diode Re 600mA/W;Diode Area 5.0mm sq	BE2	PH12d
22	529-2-1	31	20				30	2.0m	Optical Det;Diode Re 600mA/W;Diode Area 0.8mm sq	BE2	PH12c
23	529-2-5	31	20				30	2.0m	Optical Det;Diode Re 600mA/W;Diode Area 5.0mm sq	BE2	PH12d
PHOTOCIRCUIT, OPTICAL-RECEIVER-OUTPUT											
27	P1667(A)	32				25	9.0		Deuterated LATGS Pyroelectric IR Detector	BE59	TO-5
28	RPY98B(A)	32				25	9.0		Deuterated-LATGS Pyroelectric IR Detector	BE95	TO-5
29	RPY98C(A)	32				25	9.0		Deuterated-LATGS Pyroelectric IR Detector	BE95	TO-5
30	RPY98D(A)	32				25	9.0		Deuterated-LATGS Pyroelectric IR Detector	BE95	TO-5
31	RPY98E(A)	32				25	9.0		Deuterated-LATGS Pyroelectric IR Detector	BE95	TO-5
32	RPY98F(A)	32				25	9.0		Deuterated-LATGS Pyroelectric IR Detector	BE95	TO-5
33	RPY98S(A)	32				25	9.0		Deuterated-LATGS Pyroelectric IR Detector	BE95	TO-5
34	RPY101	32				47	10		Single Element Pyroelectric IR Detector	BE95	PD1091
35	SD113-24-21-021	32				2 ♦	50		Bi Cell Position Sensor Single Axis 40 Mhz Max.	None	PH311
36	SD118-23-21-021	32				2 ♦	50		Quadrant Detector Dual Axis 40 Mhz Max.	None	PH312
37	SD200-21-21-391	32				2 ♦	50		Lateral Position Sensor -.25 to .25cm. Range	None	PH310
38	SD380-23-21XXX	32				2 ♦	50		Quadrant Detector Dual Axis 25 Mhz Max.	None	PH13d
39	SD386-22-21-251	32				2 ♦	50		Lateral Position Sensor -.49 to .49cm. Range 2 Axis	None	PH13d
40	SD1166-21-11-391	32				2 ♦	50		Lateral Position Sensor -1.48 to 1.48cm Range	None	PH309
41	400(2)	32		5.0T		5C	20		Single Element;UV/Vis/IR;PE Detector	BE87	TO-5
42	P1645(A)	32	6.0	4.0k	10	24	9.0	10m	LATGS Pyroelectric IR Detector	None ♦	PH348
43	P1646(A)	32	6.0	4.0k	10	24	9.0	10m	LATGS Pyroelectric IR Detector	None ♦	PH348
44	RPY98A(A)	32	6.0	4.0k	10	25	9.0		Deuterated-LATGS Pyroelectric IR Detector	BE95	TO-5
PHOTOCIRCUIT, SCHMITT-TRIGGER-OUTPUT											
48	107-4	33				07	5.0		VCEO 5.0V;IL 50mA at VCC 5V,H2mW/cm2	BE29	PH92 ⊠
49	CLL4040	33				47	11	10m	Si Dig Outp Detector, Pd 300mW, Io 50mA, V OL .4V	None	PH362 ⊠
50	CLL4041	33				47	11	10m	Si Dig Outp Detector, Pd 300mW, Io 50mA, V OL .4V	None	PH362 ⊠
51	CLL4042	33				47	11	10m	Si Dig Outp Detector, Pd 300mW, Io 50mA, V OL .4V	None	PH362 ⊠
52	SD5600-00X	33	200m			5C	20	12m	Operating Point 2.5mw/sq cm max;Hys 30 percent max	BE69	PH164 Ø
53	SD5610-00X	33	200m			5c	20	12m	Operating Point 2.5mw/sq cm max;Hys 30% max	BE85	PH164 Ø
54	SD5620-001	33	200m			5C	20	12m	Operating Point 250uw/sq cm max;Hys 30 percent max	BE69	PH164 Ø
55	SD5620-002	33	200m			5C	20	12m	Operating Point 130uw/sq cm max;Hys 30 percent max	BE69	PH164 Ø
56	SD5630-001	33	200m			5c	20	12m	Operating Point 250uw/sq cm max;Hys 30% max	BE85	PH164 Ø
57	SD5630-002	33	200m			5c	20	12m	Operating Point 130uw/sq cm max;Hys 30% max	BE85	PH164 Ø
58	SDP8601	33	200m			4A	20	18m	Op Pt .5mw/cm2 at 935n;Hys 10%	BE69	PH165
59	SDP8602	33	200m			4A	20	18m	Op Pt .5mw/cm2 at 935n;Hys 10%	BE69	PH165
60	SDP8610	33	200m			4A	20	18m	Op Pt .5mw/cm2 at 935n;Hys 10%	BE85	PH165
61	SDP8611	33	200m			4A	20	18m	Op Pt .5mw/cm2 at 935n;Hys 10%	BE85	PH165
62	SDP8612	33	200m			4A	20	18m	Op Pt .5mw/cm2 at 935n;Hys 10%	BE85	PH165
63	PIC0101	33	400m			28	16	50m	Pc 150mW;900nm peak;TTL/CMOS compat;Voh3.5V	BE80	PD Ø
64	SD3324-002	33	400m			6F%	5.0	12m	3 uW Input Sensitivity at 820nm;tr is 150ns;FO	BE69	PD1287 Ø
65	SD3324-102	33	400m			6F%	5.0	12m	3uW Input Sensitivity at 820nm;Hermatically Tested	BE69	PD1287 Ø
66	SD4324	33	400m			4A%	5.0	12m	3 uW input sensitivity at 820nm;tr is 150ns;FO	BE69	PD1287 Ø
67	SDP8004-301	33	400m			48	5.0	15m	Plastic;Hysteresis Ratio 3 max;Buffer,TP O/P	BE102	PH164 ⊠
68	SDP8014-301	33	400m			48	5.0	15m	Plastic;Hysteresis Ratio 3 max;Inverter,TP O/P	BE103	PH364 ⊠
69	SDP8304-301	33	400m			48	16	15m	Plastic;Hysteresis Ratio 3 max;Buffer,OC O/P	BE80	PH164 ⊠
70	SDP8314-301	33	400m			48	16	15m	Plastic;Hysteresis Ratio 3 max;Inverter, O/P	BE104	PH364 ⊠
71	SDP8604-301	33	400m			48	16	15m	Plastic;Hysteresis Ratio 3 max;Buffer,10k Pull-up	BE85	PH364 ⊠
72	SDP8614-301	33	400m			48	16	15m	Plastic;Hysteresis Ratio 3 max;Inverter,10k Pull-up	BE105	PH364 ⊠
73	MFOD75	33	400m	270		58	5.0	1.3m	Digital Output Detector (FLCS) For Short Distances	CE35	PT129
74	MFOD3510	33	400m	270		5A	5.0	1.3m	Digital Output Detector (MOD System)	CE35	PD1290
75	VTIC1010	33	500m			28	15	3.2m	Light Activated Switch;Amp;Reg;Buffer	BE74	PH162
76	VTIC1010IR	33	500m			28	15	3.2m	Light Activated Switch;Amp;Reg;Buffer	BE74	PH162
77	VTIC1110	33	500m			28	15	3.2m	Light Activated Switch;Amp;Reg;Buffer	BE74	PH322
78	VTIC1110IR	33	500m			28	15	3.2m	Light Activated Switch;Amp;Reg;Buffer	BE74	PH322
79	VTIC7110	33	0.5			28	5.0	3.2m	Light Activated Switch	BE74	PH292
80	VTIC7210	33	0.5			28	5.0	3.2m	Light Activated Switch	BE74	PH292
81	OT106A	33	4.0			07	5.0	6.0m	Si PV Detector w/Hybrid AMP/Digitizer	BE15	PH67 Ø
82	OT906	33	4.0			07	5.0	6.0m	9 Elem;Si PV Detector w/Hybrid AMP/Digitizer	BE15	PH68 ⊠
83	MRD750(A)	33	16			5A	16	50m	Digital outp;Pd 150mW;ton 5uS max;Vol 0.4V	None	PT133 ⊠
PHOTOCIRCUIT, TRANSISTOR-STAGE-OUTPUT											
87	5050-1001	34				27	12	300m	Gen Pur Liquid Lev Sensor,Off when wet	BE99	PH355
88	5050-1002	34				27	12	300m	Gen Pur Liquid Lev Sensor,Off when wet,5 sec delay	BE99	PH355
89	5050-1003	34				27	12	300m	Gen Pur Liquid Lev Sensor,On when wet	BE99	PH355
90	5050-1004	34				27	12	300m	Gen Pur Liquid Lev Sensor,On when wet,5 sec delay	BE99	PH355
91	5050-1005	34				27	24	300m	Gen Pur Liquid Lev Sensor, Off when wet	BE99	PH355
92	5050-1006	34				27	24	300m	Gen Pur Liquid Lev Sensor, Off when wet,5 sec delay	BE99	PH355
93	5050-1007	34				27	24	300m	Gen Pur Liquid Lev Sensor, On when wet	BE99	PH355
94	5050-1008	34				27	24	300m	Gen Pur Liquid Lev Sensor, On when wet,5 sec delay	BE99	PH355
95	5050-1011	34				27	12	300m	Gen Pur Liquid Lev Sensor,Off when wet	BE99	PH356
96	5050-1012	34				27	12	300m	Gen Pur Liquid Lev Sensor,Off when wet,5 sec delay	BE99	PH356
97	5050-1013	34				27	12	300m	Gen Pur Liquid Lev Sensor,On when wet	BE99	PH356
98	5050-1014	34				27	12	300m	Gen Pur Liquid Lev Sensor,On when wet,5 sec delay	BE99	PH356
99	5050-1015	34				27	24	300m	Gen Pur Liquid Lev Sensor, Off when wet	BE99	PH356
100	5050-1016	34				27	24	300m	Gen Pur Liquid Lev Sensor, Off when wet,5 sec delay	BE99	PH356
101	5050-1017	34				27	24	300m	Gen Pur Liquid Lev Sensor, On when wet	BE99	PH356
102	5050-1018	34				27	24	300m	Gen Pur Liquid Lev Sensor, On when wet,5 sec delay	BE99	PH356
103	5050-1021	34				27	12	300m	Gen Pur Liquid Lev Sensor,Off when wet	BE99	PH357
104	5050-1022	34				27	12	300m	Gen Pur Liquid Lev Sensor,Off when wet,5 sec delay	BE99	PH357
105	5050-1023	34				27	12	300m	Gen Pur Liquid Lev Sensor,On when wet	BE99	PH357

SYMBOLS AND CODES EXPLAINED IN INTERPRETER

IN ORDER OF: (1) CKT. FUNCTION CODE (2)O/P VOLT-Vo (3)O/P IMPED-Zo & (4)TYPE No.

LINE No.	4 TYPE NUMBER	1 CIRCUIT FUNCTION CODE	OUTPUT 2 VOLT Vo @25°C (V)	3 IMPED. Zo @ 25°C (Ω)	f (Hz)	TEMP RNG. CODE - +	RATED SUP. VOLT ΔVs Pk-Pk (V)	CURR. Δls Pk-Pk (A)	DESCRIPTION	SCHE-MATIC	DRAWING
1	5050-1024	34				27	12	300m	Gen Pur Liquid Lev Sensor,On when wet,5 sec delay	BE99	PH357
2	5050-1025	34				27	24	300m	Gen Pur Liquid Lev Sensor, Off when wet	BE99	PH357
3	5050-1026	34				27	24	300m	Gen Pur Liquid Lev Sensor, Off when wet,5 sec delay	BE99	PH357
4	5050-1027	34				27	24	300m	Gen Pur Liquid Lev Sensor, On when wet	BE99	PH357
5	5050-1028	34				27	24	300m	Gen Pur Liquid Lev Sensor, On when wet,5 sec delay	BE99	PH357
6	5050-1031	34				27	12	300m	Gen Pur Liquid Lev Sensor,Off when wet	BE99	PH358
7	5050-1032	34				27	12	300m	Gen Pur Liquid Lev Sensor,Off when wet,5 sec delay	BE99	PH358
8	5050-1033	34				27	12	300m	Gen Pur Liquid Lev Sensor,On when wet	BE99	PH358
9	5050-1034	34				27	12	300m	Gen Pur Liquid Lev Sensor,On when wet,5 sec delay	BE99	PH358
10	5050-1035	34				27	24	300m	Gen Pur Liquid Lev Sensor, Off when wet	BE99	PH358
11	5050-1036	34				27	24	300m	Gen Pur Liquid Lev Sensor, Off when wet,5 sec delay	BE99	PH358
12	5050-1037	34				27	24	300m	Gen Pur Liquid Lev Sensor, On when wet	BE99	PH358
13	5050-1038	34				27	24	300m	Gen Pur Liquid Lev Sensor, On when wet,5 sec delay	BE99	PH358
14	5050-1041	34				27	16	300m	General Purpose Liquid Level Sensor, Off When Wet	BE99	PH359
15	5050-1042	34				27	12	300m	Gen Pur Liquid Lev Sensor,Off when wet,5 sec delay	BE99	PH359
16	5050-1043	34				27	12	300m	Gen Pur Liquid Lev Sensor,On when wet	BE99	PH359
17	5050-1044	34				27	12	300m	Gen Pur Liquid Lev Sensor,On when wet,5 sec delay	BE99	PH359
18	5050-1045	34				27	24	300m	Gen Pur Liquid Lev Sensor, Off when wet	BE99	PH359
19	5050-1046	34				27	24	300m	Gen Pur Liquid Lev Sensor, Off when wet,5 sec delay	BE99	PH359
20	5050-1047	34				27	24	300m	Gen Pur Liquid Lev Sensor, On when wet	BE99	PH359
21	5050-1048	34				27	24	300m	Gen Pur Liquid Lev Sensor, On when wet,5 sec delay	BE99	PH359
22	5050-1051	34				27	12	300m	Gen Pur Liquid Lev Sensor,Off when wet	BE99	PH360
23	5050-1052	34				27	12	300m	Gen Pur Liquid Lev Sensor,Off when wet,5 sec delay	BE99	PH360
24	5050-1053	34				27	12	300m	Gen Pur Liquid Lev Sensor,On when wet	BE99	PH360
25	5050-1054	34				27	12	300m	Gen Pur Liquid Lev Sensor,On when wet,5 sec delay	BE99	PH360
26	5050-1055	34				27	24	300m	Gen Pur Liquid Lev Sensor, Off when wet	BE99	PH360
27	5050-1056	34				27	24	300m	Gen Pur Liquid Lev Sensor, Off when wet,5 sec delay	BE99	PH360
28	5050-1057	34				27	24	300m	Gen Pur Liquid Lev Sensor, On when wet	BE99	PH360
29	5050-1058	34				27	24	300m	Gen Pur Liquid Lev Sensor, On when wet,5 sec delay	BE99	PH360
30	5050-1061	34				27	12	300m	Gen Pur Liquid Lev Sensor,Off when wet	BE99	PH361a
31	5050-1062	34				27	12	300m	Gen Pur Liquid Lev Sensor,Off when wet,5 sec delay	BE99	PH361a
32	5050-1063	34				27	12	300m	Gen Pur Liquid Lev Sensor,On when wet	BE99	PH361a
33	5050-1064	34				27	12	300m	Gen Pur Liquid Lev Sensor,On when wet,5 sec delay	BE99	PH361a
34	5050-1065	34				27	24	300m	Gen Pur Liquid Lev Sensor, Off when wet	BE99	PH361a
35	5050-1066	34				27	24	300m	Gen Pur Liquid Lev Sensor, Off when wet,5 sec delay	BE99	PH361a
36	5050-1067	34				27	24	300m	Gen Pur Liquid Lev Sensor, On when wet	BE99	PH361a
37	5050-1068	34				27	24	300m	Gen Pur Liquid Lev Sensor, On when wet,5 sec delay	BE99	PH361a
38	5050-1071	34				27	12	300m	Gen Pur Liquid Lev Sensor,Off when wet	BE99	PH361b
39	5050-1072	34				27	12	300m	Gen Pur Liquid Lev Sensor,Off when wet,5 sec delay	BE99	PH361b
40	5050-1073	34				27	12	300m	Gen Pur Liquid Lev Sensor,On when wet	BE99	PH361b
41	5050-1074	34				27	12	300m	Gen Pur Liquid Lev Sensor,On when wet,5 sec delay	BE99	PH361b
42	5050-1075	34				27	24	300m	Gen Pur Liquid Lev Sensor, Off when wet	BE99	PH361b
43	5050-1076	34				27	24	300m	Gen Pur Liquid Lev Sensor, Off when wet,5 sec delay	BE99	PH361b
44	5050-1077	34				27	24	300m	Gen Pur Liquid Lev Sensor, On when wet	BE99	PH361b
45	5050-1078	34				27	24	300m	Gen Pur Liquid Lev Sensor, On when wet,5 sec delay	BE99	PH361b
46	5050-1081	34				27	12	300m	Gen Pur Liquid Lev Sensor,Off when wet	BE99	PH361c
47	5050-1082	34				27	12	300m	Gen Pur Liquid Lev Sensor,Off when wet,5 sec delay	BE99	PH361c
48	5050-1083	34				27	12	300m	Gen Pur Liquid Lev Sensor,On when wet	BE99	PH361c
49	5050-1084	34				27	12	300m	Gen Pur Liquid Lev Sensor,On when wet,5 sec delay	BE99	PH361c
50	5050-1085	34				27	24	300m	Gen Pur Liquid Lev Sensor, Off when wet	BE99	PH361c
51	5050-1086	34				27	24	300m	Gen Pur Liquid Lev Sensor, Off when wet,5 sec delay	BE99	PH361c
52	5050-1087	34				27	24	300m	Gen Pur Liquid Lev Sensor, On when wet	BE99	PH361c
53	5050-1088	34				27	24	300m	Gen Pur Liquid Lev Sensor, On when wet,5 sec delay	BE99	PH361c
54	5050-1091	34				27	12	300m	Gen Pur Liquid Lev Sensor,Off when wet	BE99	PH361d
55	5050-1092	34				27	12	300m	Gen Pur Liquid Lev Sensor,Off when wet,5 sec delay	BE99	PH361d
56	5050-1093	34				27	12	300m	Gen Pur Liquid Lev Sensor,On when wet	BE99	PH361d
57	5050-1094	34				27	12	300m	Gen Pur Liquid Lev Sensor,On when wet,5 sec delay	BE99	PH361d
58	5050-1095	34				27	24	300m	Gen Pur Liquid Lev Sensor, Off when wet	BE99	PH361d
59	5050-1096	34				27	24	300m	Gen Pur Liquid Lev Sensor, Off when wet,5 sec delay	BE99	PH361d
60	5050-1097	34				27	24	300m	Gen Pur Liquid Lev Sensor, On when wet	BE99	PH361d
61	5050-1098	34				27	24	300m	Gen Pur Liquid Lev Sensor, On when wet,5 sec delay	BE99	PH361d
62	5050-2001	34				4A	12	150m	Gen Pur Liquid Lev Sensor,Off when wet	BE99	PH355
63	5050-2002	34				4A	12	150m	Gen Pur Liquid Lev Sensor,Off when wet,5 sec delay	BE99	PH355
64	5050-2003	34				4A	12	150m	Gen Pur Liquid Lev Sensor,On when wet	BE99	PH355
65	5050-2004	34				4A	12	150m	Gen Pur Liquid Lev Sensor,On when wet,5 sec delay	BE99	PH355
66	5050-2005	34				4A	6.0	150m	Gen Pur Liquid Lev Sensor,Off when wet	BE99	PH355
67	5050-2006	34				4A	6.0	150m	Gen Pur Liquid Lev Sensor,Off when wet,5 sec delay	BE99	PH355
68	5050-2007	34				4A	6.0	150m	Gen Pur Liquid Lev Sensor,On when wet	BE99	PH355
69	5050-2008	34				4A	6.0	150m	Gen Pur Liquid Lev Sensor,On when wet,5 sec delay	BE99	PH355
70	5050-2011	34				4A	12	150m	Gen Pur Liquid Lev Sensor,Off when wet	BE99	PH356
71	5050-2012	34				4A	12	150m	Gen Pur Liquid Lev Sensor,Off when wet,5 sec delay	BE99	PH356
72	5050-2013	34				4A	12	150m	Gen Pur Liquid Lev Sensor,On when wet	BE99	PH356
73	5050-2014	34				4A	12	150m	Gen Pur Liquid Lev Sensor,On when wet,5 sec delay	BE99	PH356
74	5050-2015	34				4A	6.0	150m	Gen Pur Liquid Lev Sensor,Off when wet	BE99	PH356
75	5050-2016	34				4A	6.0	150m	Gen Pur Liquid Lev Sensor,Off when wet,5 sec delay	BE99	PH356
76	5050-2017	34				4A	6.0	150m	Gen Pur Liquid Lev Sensor,On when wet	BE99	PH356
77	5050-2018	34				4A	6.0	150m	Gen Pur Liquid Lev Sensor,On when wet,5 sec delay	BE99	PH356
78	5050-2021	34				4A	12	150m	Gen Pur Liquid Lev Sensor,Off when wet	BE99	PH357
79	5050-2022	34				4A	12	150m	Gen Pur Liquid Lev Sensor,Off when wet,5 sec delay	BE99	PH357
80	5050-2023	34				4A	12	150m	Gen Pur Liquid Lev Sensor,On when wet	BE99	PH357
81	5050-2024	34				4A	12	150m	Gen Pur Liquid Lev Sensor,On when wet,5 sec delay	BE99	PH357
82	5050-2025	34				4A	6.0	150m	Gen Pur Liquid Lev Sensor,Off when wet	BE99	PH357
83	5050-2026	34				4A	6.0	150m	Gen Pur Liquid Lev Sensor,Off when wet,5 sec delay	BE99	PH357
84	5050-2027	34				4A	6.0	150m	Gen Pur Liquid Lev Sensor,On when wet	BE99	PH357
85	5050-2028	34				4A	6.0	150m	Gen Pur Liquid Lev Sensor,On when wet,5 sec delay	BE99	PH357
86	5050-2031	34				4A	12	150m	Gen Pur Liquid Lev Sensor,Off when wet	BE99	PH358
87	5050-2032	34				4A	12	150m	Gen Pur Liquid Lev Sensor,Off when wet,5 sec delay	BE99	PH358
88	5050-2033	34				4A	12	150m	Gen Pur Liquid Lev Sensor,On when wet	BE99	PH358
89	5050-2034	34				4A	12	150m	Gen Pur Liquid Lev Sensor,On when wet,5 sec delay	BE99	PH358
90	5050-2035	34				4A	6.0	150m	Gen Pur Liquid Lev Sensor,Off when wet	BE99	PH358
91	5050-2036	34				4A	6.0	150m	Gen Pur Liquid Lev Sensor,Off when wet,5 sec delay	BE99	PH358
92	5050-2037	34				4A	6.0	150m	Gen Pur Liquid Lev Sensor,On when wet	BE99	PH358
93	5050-2038	34				4A	6.0	150m	Gen Pur Liquid Lev Sensor,On when wet,5 sec delay	BE99	PH358
94	5050-2041	34				4A	12	150m	Gen Pur Liquid Lev Sensor,Off when wet	BE99	PH359
95	5050-2042	34				4A	12	150m	Gen Pur Liquid Lev Sensor,Off when wet,5 sec delay	BE99	PH359
96	5050-2043	34				4A	12	150m	Gen Pur Liquid Lev Sensor,On when wet	BE99	PH359
97	5050-2044	34				4A	12	150m	Gen Pur Liquid Lev Sensor,On when wet,5 sec delay	BE99	PH359
98	5050-2045	34				4A	6.0	150m	Gen Pur Liquid Lev Sensor,Off when wet	BE99	PH359
99	5050-2046	34				4A	6.0	150m	Gen Pur Liquid Lev Sensor,Off when wet,5 sec delay	BE99	PH359
100	5050-2047	34				4A	6.0	150m	Gen Pur Liquid Lev Sensor,On when wet	BE99	PH359
101	5050-2048	34				4A	6.0	150m	Gen Pur Liquid Lev Sensor,On when wet,5 sec delay	BE99	PH359
102	5050-2051	34				4A	12	150m	Gen Pur Liquid Lev Sensor,Off when wet	BE99	PH360
103	5050-2052	34				4A	12	150m	Gen Pur Liquid Lev Sensor,Off when wet,5 sec delay	BE99	PH360
104	5050-2053	34				4A	12	150m	Gen Pur Liquid Lev Sensor,On when wet	BE99	PH360
105	5050-2054	34				4A	12	150m	Gen Pur Liquid Lev Sensor,On when wet,5 sec delay	BE99	PH360
106	5050-2055	34				4A	6.0	150m	Gen Pur Liquid Lev Sensor,Off when wet	BE99	PH360
107	5050-2056	34				4A	6.0	150m	Gen Pur Liquid Lev Sensor,Off when wet,5 sec delay	BE99	PH360
108	5050-2057	34				4A	6.0	150m	Gen Pur Liquid Lev Sensor,On when wet	BE99	PH360
109	5050-2058	34				4A	6.0	150m	Gen Pur Liquid Lev Sensor,On when wet,5 sec delay	BE99	PH360
110	CA3062	34				5C	7.5	5.5m	Photo Detector and Power Amp;Pk WL 725nm;tr 125us	BE25	PH83 Ø

SYMBOLS AND CODES EXPLAINED IN INTERPRETER

IN ORDER OF: (1) CKT. FUNCTION CODE (2)O/P VOLT-Vo (3)O/P IMPED-Zo & (4)TYPE No.

LINE No.	4 TYPE NUMBER	1 CIRCUIT FUNCTION CODE	OUTPUT 2 VOLT Vo @25°C (V)	3 IMPED. @ 25°C Zo (Ω)	f (Hz)	TEMP RNG. CODE - +	RATED SUP. VOLT ΔVs Pk-Pk (V)	CURR. ΔIs Pk-Pk (A)	DESCRIPTION	SCHE-MATIC	DRAWING
1	P1-51	34		5.0k		07	15		FET;BW 10MHz;Re 100v/W at 632nm;Act Dia 1mm	BE48	PH123
2	P1-52	34		5.0k		07	15		FET;BW 10MHz;Re 50v/W at 632nm;Act Dia 2mm	BE48	PH123
3	P1-53	34		5.0k		07	15		FET;BW 10MHz;Re 50v/W at 632nm;Act Dia 3mm	BE48	PH123
4	P1-55	34		5.0k		07	15		FET;BW 10MHz;Re 25v/W at 632nm;Act Dia 5mm	BE48	PH123
5	P1-61	34		5.0k		07	15		FET;BW 70MHz;Re 100v/W at 632nm;Act Dia 1mm	BE48	PH123
6	P1-62	34		5.0k		07	15		FET;BW 70MHz;Re 50v/W at 632nm;Act Dia 2mm	BE48	PH123
7	P1-63	34		5.0k		07	15		FET;BW 70MHz;Re 50v/W at 632nm;Act Dia 3mm	BE48	PH123
8	P1-65	34		5.0k		07	15		FET;BW 70MHz;Re 25v/W at 632nm;Act Dia 5mm	BE48	PH123
9	P1-71	34		5.0k		07	15		FET;BW 100kHz;Re 900v/W at 632nm;Act Dia 1mm	BE48	PH123
10	P1-72	34		5.0k		07	15		FET;BW 100kHz;Re 200v/W at 632nm;Act Dia 2mm	BE48	PH123
11	P1-73	34		5.0k		07	15		FET;BW 100kHz;Re 90v/W at 632nm;Act Dia 3mm	BE48	PH123
12	P1-75	34		5.0k		07	15		FET;BW 100kHz;Re 25v/W at 632nm;Act Dia 5mm	BE48	PH123
13	5050-3003	34	0.2			27	15		CMOS Liquid Lev Sensor,VOL 0.2V,VOH 14.0V	BE101	PH355
14	5050-3004	34	0.2			27	15		CMOS Liq Lev Sensor,VOL 0.2V,VOH 14.0V,5 sec delay	BE101	PH355
15	5050-3013	34	0.2			27	15		CMOS Liquid Lev Sensor,VOL 0.2V,VOH 14.0V	BE101	PH356
16	5050-3014	34	0.2			27	15		CMOS Liq Lev Sensor,VOL 0.2V,VOH 14.0V,5 sec delay	BE101	PH356
17	5050-3023	34	0.2			27	15		CMOS Liquid Lev Sensor,VOL 0.2V,VOH 14.0V	BE101	PH357
18	5050-3024	34	0.2			27	15		CMOS Liq Lev Sensor,VOL 0.2V,VOH 14.0V,5 sec delay	BE101	PH357
19	5050-3033	34	0.2			27	15		CMOS Liquid Lev Sensor,VOL 0.2V,VOH 14.0V	BE101	PH358
20	5050-3034	34	0.2			27	15		CMOS Liq Lev Sensor,VOL 0.2V,VOH 14.0V,5 sec delay	BE101	PH358
21	5050-3043	34	0.2			27	15		CMOS Liquid Lev Sensor,VOL 0.2V,VOH 14.0V	BE101	PH359
22	5050-3044	34	0.2			27	15		CMOS Liq Lev Sensor,VOL 0.2V,VOH 14.0V,5 sec delay	BE101	PH359
23	5050-3053	34	0.2			27	15		CMOS Liquid Lev Sensor,VOL 0.2V,VOH 14.0V	BE101	PH360
24	5050-3054	34	0.2			27	15		CMOS Liq Lev Sensor,VOL 0.2V,VOH 14.0V,5 sec delay	BE101	PH360
25	5050-3063	34	0.2			27	15		CMOS Liquid Lev Sensor,VOL 0.2V,VOH 14.0V	BE101	PH361a
26	5050-3064	34	0.2			27	15		CMOS Liq Lev Sensor,VOL 0.2V,VOH 14.0V,5 sec delay	BE101	PH361a
27	5050-3073	34	0.2			27	15		CMOS Liquid Lev Sensor,VOL 0.2V,VOH 14.0V	BE101	PH361b
28	5050-3074	34	0.2			27	15		CMOS Liq Lev Sensor,VOL 0.2V,VOH 14.0V,5 sec delay	BE101	PH361b
29	5050-3083	34	0.2			27	15		CMOS Liquid Lev Sensor,VOL 0.2V,VOH 14.0V	BE101	PH361c
30	5050-3084	34	0.2			27	15		CMOS Liq Lev Sensor,VOL 0.2V,VOH 14.0V,5 sec delay	BE101	PH361c
31	5050-3093	34	0.2			27	15		CMOS Liquid Lev Sensor,VOL 0.2V,VOH 14.0V	BE101	PH361d
32	5050-3094	34	0.2			27	15		CMOS Liq Lev Sensor,VOL 0.2V,VOH 14.0V,5 sec delay	BE101	PH361d
33	5050-3001	34	0.8			27	5.0		TTL Liquid Lev Sensor,VOL 0.8V,VOH 2.4V	BE100	PH355
34	5050-3002	34	0.8			27	5.0		TTL Liquid Lev Sensor,VOL 0.8V,VOH 2.4V,5 sec delay	BE100	PH355
35	5050-3011	34	0.8			27	5.0		TTL Liq Lev Sensor,VOL 0.8V,VOH 2.4V	BE100	PH356
36	5050-3012	34	0.8			27	5.0		TTL Liq Lev Sensor,VOL 0.8V,VOH 2.4V,5 sec delay	BE100	PH356
37	5050-3021	34	0.8			27	5.0		TTL Liq Lev Sensor,VOL 0.8V,VOH 2.4V	BE100	PH357
38	5050-3022	34	0.8			27	5.0		TTL Liq Lev Sensor,VOL 0.8V,VOH 2.4V,5 sec delay	BE100	PH357
39	5050-3031	34	0.8			27	5.0		TTL Liq Lev Sensor,VOL 0.8V,VOH 2.4V	BE100	PH358
40	5050-3032	34	0.8			27	5.0		TTL Liq Lev Sensor,VOL 0.8V,VOH 2.4V,5 sec delay	BE100	PH358
41	5050-3041	34	0.8			27	5.0		TTL Liq Lev Sensor,VOL 0.8V,VOH 2.4V	BE100	PH359
42	5050-3042	34	0.8			27	5.0		TTL Liq Lev Sensor,VOL 0.8V,VOH 2.4V,5 sec delay	BE100	PH359
43	5050-3051	34	0.8			27	5.0		TTL Liq Lev Sensor,VOL 0.8V,VOH 2.4V	BE100	PH360
44	5050-3052	34	0.8			27	5.0		TTL Liq Lev Sensor,VOL 0.8V,VOH 2.4V,5 sec delay	BE100	PH360
45	5050-3061	34	0.8			27	5.0		TTL Liq Lev Sensor,VOL 0.8V,VOH 2.4V	BE100	PH361a
46	5050-3062	34	0.8			27	5.0		TTL Liq Lev Sensor,VOL 0.8V,VOH 2.4V,5 sec delay	BE100	PH361a
47	5050-3071	34	0.8			27	5.0		TTL Liq Lev Sensor,VOL 0.8V,VOH 2.4V	BE100	PH361b
48	5050-3072	34	0.8			27	5.0		TTL Liq Lev Sensor,VOL 0.8V,VOH 2.4V,5 sec delay	BE100	PH361b
49	5050-3081	34	0.8			27	5.0		TTL Liq Lev Sensor,VOL 0.8V,VOH 2.4V	BE100	PH361c
50	5050-3082	34	0.8			27	5.0		TTL Liq Lev Sensor,VOL 0.8V,VOH 2.4V,5 sec delay	BE100	PH361c
51	5050-3091	34	0.8			27	5.0		TTL Liq Lev Sensor,VOL 0.8V,VOH 2.4V	BE100	PH361d
52	5050-3092	34	0.8			27	5.0		TTL Liq Lev Sensor,VOL 0.8V,VOH 2.4V,5 sec delay	BE100	PH361d
53	C30924E	34	2.0	1.0k		58	15	1.0m	PHOTOFET;5.0mm sq;Re 10MV/W at 900nm;tr 35us	BE63	PD109
54	C30925E	34	2.0	1.0k		58	15	1.0m	PHOTOFET;1.0mm sq;RE 10MV/W at 900nm;tr 7.0us	BE63	PD109
55	H11F3	34	15	470	0	5A	60	200m	Bilateral Analog FET;Isol 700Vrms;Pd 450mW	BE58	PH16z
56	H11F1	34	30	200	0	5A	60	200m	Bilateral Analog FET;Isol 1060Vrms;Pd 450mW	BE58	PH16z
57	H11F2	34	30	330	0	5A	60	200m	Bilateral Analog FET;Isol 1060Vrms;Pd 450mW	BE58	PH16z

The APPLICATION NOTES REFERENCE from D.A.T.A. includes more than 270 optoelectronic applications.

SYMBOLS AND CODES EXPLAINED IN INTERPRETER

IN ORDER OF: (1) SENSING ELEMENT (2) No OF ELEMENTS (3) LIGHT CURRENT & (4) TYPE NUMBER

PHOTODIODE ARRAY

LINE No.	4 TYPE NUMBER	1 TYPE CODE	2 NO. OF ELE-MENTS	PD RATED MAX (W)	TEMP RNG. CODE - +	MAX. VOLT #-VR Δ-VCEO (V)	MAX. DARK CURRENT ID (A)	#-VR Δ-VCE (V)	3 MINIMU M LIGHT CURRENT IL #-RESP (A)	Ee (W/ cm2)	S R C	#-VR Δ-VCE (V)	CENTER SPACING (in)	RESP. TIME (s)	MATCH FACT -OR- MIN/ MAX	MATERIAL & FEATURES MAT	FEATURES	SCHE-MATIC	DRAWING
4	RA100X100A(A)	DI							13u%		E		60 Δ				;10k Ele §	BF27	PA80
5	LD2-0	DI	2			30	5.0n†	30 #					1.0m	15n			AD	None	PA35 Ø
6	LD2-1	DI	2				5.0n†	30 #					1.9m				XX	None	PA35 Ø
7	LD2-2	DI	2				5.0n†	30 #					1.9m				XX	None	PA35 Ø
8	LD2-3	DI	2				5.0n†	30 #					1.9m				XX	None	PA35 Ø
9	LD2-4	DI	2				5.0n†	30 #					1.9m				XX	None	PA35 Ø
10	CD5116H20	DI	2		28	30	10n	15	12u†	5.0m	C	1.0	20m	100n			AD.02mmSeparation	None	None
11	CD33H2D	DI	2	100m	28	30	10n	1.0	55u	5.0m	C	1.0	124m	200n			AD	None	PA93
12	LD2-5T	DI	2		57		50p	5.0	110m#					40n			XX	AD	TO-5
13	25PDU5M	DI	2				100n	10	450m#								XX	None	PD412 Ø
14	S994-22	DI	2		16	5.0	25p	10m#	500m#		A		0.059	200n			AD950nm peak	None ♦	PA86 Ø
15	SD9740(A)	DI	2			15	10n	15	0.5 #				737m	10n			AD Dual Cell	None	TO-18 Ø
16	SD11580P(A)	DI	2			15	10n	15	0.5 #				0.150				AD Dual Cell	None	TO-5 Ø
17	BPX48	DI	2	50m	4J%	330m	200n	10 #	550m#				90 Δ	500n			Differential	M ♦	PD145 ☑
18	LD3-5A	DI	3				20n						60m	550n			AD Blue Enhanced	None	None
19	CD33H4D	DI	4	50n	28	30	10n	1.0						100n			AD	None	PA95
20	CD1515H4D	DI	4		28	10	5.0n	1.0						100n			AD	None	PA94
21	CLCD621-4	DI	4				25n	100m					140m	10u			Isc 50uA	None	PA175
22	CLCD637-4	DI	4				10n	100m					60m	5.0u			Isc 8.0uA	None	PA175
23	CLCD765-4	DI	4				10n	100m					25m	4.0u			Isc 1.0uA	None	PA175
24	LD4-5A	DI	4				20n						39m	550n			AD Blue Enhanced	None	None
25	PN304K	DI	4	50m	3A	30	30n	10 #						20n			AD Quadrant	BF36	PA132
26	PN314K	DI	4	30m	28	30												None	None
27	SFH204	DI	4	40m	48%	450m	2.0n	10 #	80p♦		C	5.0	0.2	3.0u			4 Quadrant	None ♦	PS286 ☑
28	NSL701-4A	DI	4		6F	5.0	10u	1.5	300u	25m			100m	8.0u			AD	None	PA44 Δ
29	S994-13	DI	4		28	10	25p	10m#	300m#		A		0.059	300n			AD850nm peak	None ♦	PA87 Ø
30	HPI0814	DI	4		2A		500n	5.0 #	400m		C						AD480-1k nm	BF24	PA67
31	HPI1460	DI	4		28		1.0u	5.0 #	400m		C						AD480-1k nm	BF26	PA69
32	45PQU5M	DI	4				50n	10	450m#								XX	None	PD412a Ø
33	S1557	DI	4		28	10	1.0n	10 #	500m#		A		0.019	1.0n			AD850nm peak	None ♦	PA88 Ø
34	S1557-01	DI	4		16	10	1.0n	10 #	500m#		A		0.019	1.0n			AD850nm peak	None ♦	PA89 ☑
35	S1671	DI	4		16	10	25p	10m#	500m#		A		0.068	300n			AD850nm peak	None ♦	PA90 Ø
36	S1651	DI	4		28	10	1.0n	10 #	550m#		A		0.011	1.0n			AD850nm peak	None ♦	PA88a Ø
37	S1651-01	DI	4		16	10	1.0n	10 #	550m#		A		0.011	1.0n			AD850nm peak	None ♦	PA89 ☑
38	LD5-5A	DI	5				20n						33m	550n			AD Blue Enhanced	None	None
39	NSL701-5A	DI	5		6F	5.0	10u	1.5	300u	25m				8.0u			AD	None	PA44a Δ
40	NSL701-6A	DI	6		6F	5.0	10u	1.5	300u	25m				8.0u			AD	None	PA44b Δ
41	HPI1215	DI	6		2A		500n	5.0 #	400m		C						AD480-1k nm	BF25	PA68
42	NSL701-7A	DI	7		6F	5.0	10u	1.5	300u	25m				8.0u			AD	None	PA44c Δ
43	NSL701-8A	DI	8		6F	5.0	10u	1.5	300u	25m				8.0u			AD	None	PA44d Δ
44	HPI0750	DI	8		27		500n	5.0 #	400m		C						AD480-1k nm	BF23	PA66
45	NSL701-9	DI	9	500m		5.0	1.0u	1.0	300u	25m	E		100m	1.0u			AD	None	None
46	LD12-5A	DI	12				20n	0					22m	550n			AD Blue Enhanced	None	None
47	LD16-5A	DI	16				20n						39m	550n			AD Blue Enhanced	None	None
48	OPA16	DI	16		28	7.0											line sensor	FB141	PS306
49	PD0391	DI	18		37		100n	1.0 #					.10				Blk Bakelite	BF5	PA41
50	LD20-0	DI	20			30	20n†	30 #					1.0m	15n			AD	None	PA36 ☑
51	LD20-1	DI	20				20n†	30 #					1.9m				XX	None	PA36 Ø
52	LD20-2	DI	20				20n†	30 #					1.9m				XX	None	PA36 Ø
53	LD20-3	DI	20				20n†	30 #					1.9m				XX	None	PA36 Ø
54	LD20-4	DI	20				20n†	30 #					1.9m				XX	None	PA36 Ø
55	LD20-5	DI	20				20n						37m	550n			AD Blue Enhanced	None	None
56	MD25-0	DI	25		27		70n†	30					3.9m	15n			AD 5x5 Matrix	None	PA37
57	MD25-1	DI	25		27		70n†	30 #					3.9m				5x5 Matrix	None	PA37 ☑
58	MD25-2	DI	25		27		70n†	30 #					3.9m				5x5 Matrix	None	PA37 ☑
59	MD25-3	DI	25		27		70n†	30 #					3.9m				5x5 Matrix	None	PA37 ☑
60	MD25-4	DI	25		27		70n†	30 #					3.9m				5x5 Matrix	None	PA37 ☑
61	MD25-5	DI	25		4A		70n	10					122m	550n			AD2 Dimensional	None	None
62	S994-17	DI	32		16	5.0	5.0p	10m#	300m#		A		0.025	1.0u			AD430-1060nm	None ♦	PA91 ☑
63	S994-18	DI	32		16	5.0	5.0p	10m#	300m#		A		0.025	1.0u			AD300-1060nm	None ♦	PA91 ☑
64	S994-19	DI	32		16	5.0	5.0p	10m#	300m#		A		0.025	1.0u			AD200-1060nm	None ♦	PA91 ☑
65	S1592	DI	35		16	5.0	10p	10m#	300m		A		0.037	1.0u			AD850nm peak	None ♦	PA92 ☑
66	S1592-01	DI	35		16	5.0	10p	10m#	300m		A		0.037	1.0u			AD850nm peak	None ♦	PA92 ☑
67	S1865	DI	35		16	5.0	10p	10m#	300m		A		0.037	3.0u			AD800nm peak	None ♦	PA92 ☑
68	S1865-01	DI	35		16	5.0	10p	10m#	300m		A		0.037	3.0u			AD800nm peak	None ♦	PA92 ☑
69	S1866	DI	35		16	5.0	100p	10m#	500m		A		0.037	200n			AD900nm peak	None ♦	PA92 ☑
70	S1866-01	DI	35		16	5.0	100p	10m#	500m		A		0.037	200n			AD900nm peak	None ♦	PA92 ☑
71	LD50-5	DI	50				20n						24m	550n			AD Blue Enhanced	None	None
72	OPA64T	DI	64		28	-25											line sensor	FB142	PS307
73	RL64A	DI	64	125m	5C%	12											XX	FB168	PS3851
74	RO64	DI	64	2.5m	5C%	12											circular sensor	FB11	PS19a ☑
75	RL64EL	DI	64	2.0m	5C%	5.0			5.0 ♦				500u		10*		;Aper Wd 2.5mil §	BF8	PA48
76	MD100-0	DI	100		27		20n†	30					3.9m	15n			AD 10x10 Matrix	None	PA38 ☑
77	MD100-1	DI	100		27		20n†	30 #					3.9m				10x10 Matrix	None	PA38 ☑
78	MD100-2	DI	100		27		20n†	30 #					3.9m				10x10 Matrix	None	PA38 ☑
79	MD100-3	DI	100		27		20n†	30 #					3.9m				10x10 Matrix	None	PA38 ☑
80	MD100-4	DI	100		27		20n†	30 #					3.9m				10x10 Matrix	None	PA38
81	MD100-5	DI	100		4A		20n	10					59m	550n			AD2 Dimensional	None	None
82	OPA128	DI	128		28	-20											line sensor	FB143	PS308
83	OPA128T	DI	128		28	-25											line sensor	FB144	PS309
84	RL128G	DI	128	45m	5C%	5.0							984u				XX	BF17	PA47p
85	RL128S	DI	128	1.0m	78	5.0	5.0p†		280u%				984u		5.0*		AD Quartz §	None	PA47
86	RL128SF	DI	128	1.0m	78	5.0	5.0p†		280u%				984u		5.0*		AD Fiber Optic §	None	PA47
87	RL128SFX	DI	128	1.0m	78	5.0	5.0p†		280u%				25 Δ				;Sat Chg 14 pc §	BF12	PA47j
88	RL128L(1)	DI	128	4.0m	5C%	5.0			4.0 ♦				250u		10*		;Aper Wd 2.5mil §	BF8	PA48
89	RL128EC17	DI	128	1.5m	5C%	5.0			12 ♦				200u		10*		;Aper Wd 17mil §	BF10	PS120b
90	RL128EC	DI	128	1.5m	5C%	5.0			12 ♦				200u		10*		;Aper Wd 1.0mil §	BF10	PS120b
91	MD144-5	DI	144		4A		20n						59m	550n			AD2 Dimensional	None	None
92	OPA256	DI	256		28	-25											line sensor	FB144	PS309
93	RL256C	DI	256	3m	5C%	5.0					E		39u				XX	BF15	PA47n
94	RL256G(2)	DI	256	45m	5C%	5.0							984u				XX	BF17	PA47u
95	RL256EC	DI	256	1.5m	5C%	5.0			1.1 ♦				200u		10*		;Aper Wd 1.0mil §	BF10	PA47f
96	RL256EC17	DI	256	1.5m	5C%	5.0			12 ♦				200u		10*		;Aper Wd 17mil §	BF10	PA47f
97	RL384EC	DI	384	1.5m	5C%	5.0					E		2 Δ				XX	BF14	PA47g
98	CCPD128X4(A)	DI	512	60m	25	5.0	20m†										XX	BF21	None
99	MN512K	DI	512	5.0m	26									200n			XX	None	PS133 ☑
100	OPA512T	DI	512		28	-25											line sensor	FB145	PS310
101	RL512B24	DI	512	4m	5C%	-20							1 Δ				XX	BF16	PA47f
102	RL512B	DI	512	4m	5C%	-20							1 Δ				XX	BF16	PA47f
103	RL512C	DI	512	3m	5C%	5.0					E		39u				XX	BF16	PA47f
104	RL512G	DI	512	45m	5C%	5.0							984u				XX	BF18	PA47r
105	RL512S	DI	512	1.0m	78	5.0	5.0p†		280u%				984u		5.0*		;Aper Wd 2.5 mil§	BF12	PA47j
106	RL512SF	DI	512	1.0m	78	5.0	5.0p†		280u%				984u		5.0*		;Aper Wd 2.5 mil§	BF12	PA47j
107	RL512SFX	DI	512	1.0m	78	5.0	5.0p†		280u%				25 Δ				;Sat Chg 14 pc §	BF12	PA47j
108	RL512EC	DI	512	1.5m	5C%	5.0			1.1 ♦				200u		10*		;Aper Wd 1.0mil §	BF10	PA47
109	RL512EC17	DI	512	1.5m	5C%	5.0			19 ♦				200u		10*		;Aper Wd 17mil §	BF10	PA47
110	RA14X41	DI	574			17							410u		.40*		Prelim Data	None	None

SYMBOLS AND CODES EXPLAINED IN INTERPRETER

15. PHOTODECTOR LINEAR ARRAYS - Photodiode Array (Cont'd)

IN ORDER OF: (1) SENSING ELEMENT (2) No OF ELEMENTS (3) LIGHT CURRENT & (4) TYPE NUMBER

LINE No.	4 TYPE NUMBER	1 TYPE CODE	2 NO. OF ELE-MENTS	PD RATED MAX (W)	TEMP RNG. CODE - +	MAX. VOLT #-VR Δ-VCEO (V)	MAX. DARK CURRENT ID (A)	#-VR Δ-VCE (V)	3 MINIMU M LIGHT CURRENT IL #-RESP (A)	Ee (W/cm2)	S R C	#-VR Δ-VCE (V)	CENTER SPACING (in)	RESP. TIME (s)	MATCH FACT -OR- MIN/MAX	MATERIAL & FEATURES MAT	SCHE-MATIC	DRAWING
1	RO720A	DI	720		58											circular sensor	FB40	None
2	MN864A	DI	864	20m	26									2.0u		XX	None	PS133 *
3	OPA864	DI	864		28	-25										line sensor	FB147	PS311
4	RA16X62(A)	DI	992		07								100 Δ			;16x62 §	BF28	PA81
5	CCPD128X8(A)	DI	1024	60m	25	5.0	20m†									XX	BF22	None
6	OPA1024	DI	1024		28	-25										line sensor	FB147	PS311
7	RL1024G	DI	1024	45m	5C%	5.0							984u			XX	BF19	PA47s
8	RL1024S	DI	1024	1.0m	78	5.0	5.0p†		280u%				984u		5.0*	;Aper Wd 2.5 mil§	BF12	PA47k
9	RL1024SF	DI	1024	1.0m	78	5.0	5.0p†		280u%				984u		5.0*	;Aper Wd 2.5 mil§	BF12	PA47k
10	RL1024SFX	DI	1024	1.0m	78	5.0	5.0p†		280u%				25 Δ			;Sat Chg 14 pc §	BF12	PA47j
11	RL1024C	DI	1024	3.0m	5C%	5.0			.70 ♦				100u		10*	Aper Wd 1.0mil	BF10a	PA47b
12	RL1024H	DI	1024		5C%	5.0			.90 ♦				591u			Aper Wd 16um §	BF29	PA47m
13	RL1024H/20	DI	1024		5C%	5.0			.90 ♦				11.8m			;Aper Wd 16um §	None	PA47e
14	RL1024C17	DI	1024	1.5m	5C%	5.0			12 ♦				200u		10*	Aper Wd 17mil	BF10a	PA47b
15	OPA1728	DI	1728		28	-25										line sensor	FB147	PS312
16	RL1728H	DI	1728	4.0m	5C%	5.0			.90 ♦				590u			Aper Wd 16um §	BF30	PA47c
17	RL2048H	DI	2048		5C%	5.0			.90 ♦				590u			;Aper Wd 16um §	BF30	PA47d
18	RL2048H/20	DI	2048		5C%	5.0			.90 ♦				11.8m			;Aper Wd 16um §	None	PA47d
PHOTOTRANSISTOR ARRAY																		
22	CLCT726	TR	2				40n	5.0	200n	5.0m		5.0	16m	3.0u		BVceo 35V	None	PA173
23	CLCT809	TR	2				40n	5.0	200n	5.0m		5.0	30m	3.0u		BVceo 35V	None	PA171
24	CLCT810	TR	2				40n	5.0	250n	5.0m		5.0	24m	3.0u		BVceo 35V	None	PA172
25	CLCT726A	TR	2				40n	5.0	500n	5.0m		5.0	16m	3.0u		BVceo 35V	None	PA173
26	CLCT809A	TR	2				40n	5.0	500n	5.0m		5.0	30m	3.0u		BVceo 35V	None	PA171
27	CLCT810A	TR	2				40n	5.0	600n	5.0m		5.0	24m	3.0u		BVceo 35V	None	PA172
28	LA702SN	TR	2	100m	07§	25	20n†	10 Δ	20u†	2.0m	E	10 Δ	.100	3.0u	.333	AD;Paper Tape Rdr	BF3	PA18 Δ
29	BPX82	TR	2	100m#	48%	32	200n	25 Δ	2.5m	20m	C	5.0 Δ	100m	8.0u	.50	Silicon NPN	None ♦	PA26 Δ
30	CTR5120A	TR	2				200n	10	300m	1.0m		5.0	36m	15u		BVceo 25V	ED7	PA168
31	BPX83	TR	3	100m#	48%	32	200n	25 Δ	2.5m	20m	C	5.0 Δ	100m	8.0u	.50	Silicon NPN	None ♦	PA26 Δ
32	CLCT511A4	TR	4				40n	5.0	500n	5.0m		5.0	25m	3.0u		BVceo 35V	None	PA174
33	BPX84	TR	4	100m#	48%	32	200n	25 Δ	2.5m	20m	C	5.0 Δ	100m	8.0u	.50	Silicon NPN	None ♦	PA26 Δ
34	CTR5130A	TR	4				100n	10	150m	1.0m		5.0		3.0u		BVceo 40V	ED7	PA168
35	BPX85	TR	5	100m#	48%	32	200n	25 Δ	2.5m	20m	C	5.0 Δ	100m	8.0u	.50	Silicon NPN	None ♦	PA26 Δ
36	BPX86	TR	6	100m#	48%	32	200n	25 Δ	2.5m	20m	C	5.0 Δ	100m	8.0u	.50	Silicon NPN	None ♦	PA26 Δ
37	CTR5140A	TR	6				100n	10	150m	1.0m		5.0		3.0u		BVceo 40V	ED9	PA170
38	BPX87	TR	7	100m#	49§	32	200n	25 Δ	2.5m	20m	C	5.0 Δ	100m	8.0u	.50	Silicon NPN	None ♦	PA26 Δ
39	BPX88	TR	8	100m#	48%	32	200n	25 Δ	2.5m	20m	C	5.0 Δ	100m	8.0u	.50	Silicon NPN	None ♦	PA26 Δ
40	PN9-254A	TR	9		28						C		100m	900n		AD for punch crd	None ♦	PA70 ⊠
41	PN9-254RC	TR	9		28						C		100m	900n		AD for punch crd	None ♦	PA71 ⊠
42	STA71	TR	9	200m#	48	30	100n	5.0 Δ					100m	3.0u	.850	AD	None	PA12 Δ
43	STA72	TR	9	200m#	48	30	100n	5.0 Δ					100m	3.0u	.850	AD	None	PA18g Δ
44	LA709	TR	9	100m	07§	25	20n†	10 Δ	20u†	2.0m	E	10 Δ	.100	3.0u	.333	AD;Paper Tape Rdr	BF3	PA18g Δ
45	SA609	TR	9	1.19m	47§	25	100n	5.0 Δ	80u	2.0m	E	5.0 Δ	.100	40u	.650	AD Tape Reader	None	PA12 ⊠
46	SA609A	TR	9	1.19m	47§	25	100n	5.0 Δ	80u	2.0m	E	5.0 Δ	.100	40u	.850	AD Tape Reader	None	PA12 ⊠
47	LA609	TR	9	100m	07§	30	200n	10 Δ	750u	10m	E	10 Δ	.100	3.0u	.500	AD;Paper Tape Rdr	BF3	PA18g Δ
48	LA209	TR	9	100m	07§	30	200n	5.0 Δ	800u	2.0m	E	5.0 Δ	.100	20u	.500	AD;Paper Tape Rdr	BF3	PA18g Δ
49	LA809	TR	9	100m	07§	25	20n†	10 Δ	2.0m†	2.0m	E	10 Δ	.100	150u	.500	AD;Paper Tape Rdr	BF3	PA18g Δ
50	BPX89A	TR	9	100m#	48%	32	200n	25 Δ	2.5m	20m	C	5.0 Δ	100m	8.0u	.50	Silicon NPN	None ♦	PA26 Δ
51	BPX80	TR	10	100m#	48%	32	200n	25 Δ	2.5m	20m	C	5.0 Δ	100m	8.0u	.50	Silicon NPN	None ♦	PA26 Δ
52	PN12-635	TR	12		28						C		250m	1.7u		AD for punch crd	None ♦	PA72 ⊠
53	STA73	TR	12	200m#	48	30	100n	5.0 Δ					250m	3.0u	.850	AD	None	PA13 Δ

Use this book with D.A.T.A.'s OPTOELECTRONIC DISCONTINUED DEVICES for fast, easy device substitution.

SYMBOLS AND CODES EXPLAINED IN INTERPRETER

16. LIGHT DEPENDENT RESISTORS (LDRs)

IN ORDER OF: (1) TYPE (2) No. ELEMENTS (3) Ron (4) Ev TEST (5) V MAX & (6) TYPE No

LINE No.	6 TYPE NUMBER	PD RATED MAX (W)	PEAK WAVE-LENGTH λp (m)	5 VOLT MAX (V)	TEMP RNG. CODE - +	3 LIGHT RESISTANCE TEST CONDITIONS Ron (Ω)	Ev 4 (fc)	Ev (lx)	SRC	2 No. ELE-MNTS	DARK RESISTANCE Roff (Ω)	SECs. AFTER (s)	Ev TEST (fc)	Ev TEST (lx)	SRC	1 MAT	FEATURES	LEAD CODE	DRAWING
LIGHT DEPENDENT RESISTOR																			
4	RPY76B	20m	2.2u		25					1						BH			TO-5
5	SD04111-11-011			50						1	300M	3.7n				XX		Z	TO-46
6	SD04112-12-011			50						1	300M	4.5n				XX		Z	TO-46
7	SD07611-11-011			50						1	130M	3.8n				XX		Z	TO-46
8	SD07612-12-011			50						1	130M	6.3n				XX		Z	TO-46
9	P819		2.7u	90	56%					1	500k					BH			PC73
10	P1026		2.5u	90	56%					1	1.5M					BH			TO-66
11	P1908		2.2u	90	56%					1	1.5M					BH			TO-8
12	P1908-01		2.4u	90	56%					1	10M					BH			TO-8
13	P903		3.8u	100	56%					1	1.0M					BS			TO-66
14	P2038		3.8u	100	56%					1	1.0M					BS			TO-8
15	P2038-01		3.8u	100	56%					1	5.0M					BS			TO-8
16	P2051		3.8u	100	56%					1	1.0M					BS			PC73
17	VT420HR	400m	515n	1.0k	57				C	1					C	XX			PC64
18	VT420LR	400m	515n	1.0k	57				C	1					C	XX			PC64
19	VT421HR	400m	515n	1.5k	57				C	1					C	XX			PC64
20	VT421LR	400m	515n	1.5k	57				C	1					C	XX			PC64
21	VT422HR	400m	515n	1.7k	57				C	1					C	XX			PC64
22	VT422LR	400m	515n	1.7k	57				C	1					C	XX			PC64
23	VT423HR	400m	515n	2.0k	57				C	1					C	XX			PC64
24	VT423LR	400m	515n	2.0k	57				C	1					C	XX			PC64
25	CK1271	500m	710n	200	57	75	100		E	1	10M				E	BB			PC1b Ø
26	NSL4840	200m	560n	120	67	120	100		C	1	250k	15	50		C	BA	Hermetic		PC42
27	NSL4842	200m	560n	120	67	120	100	10	C	1	100k	15	50	500	C	BA	Plastic		PC58 Ø
28	NSL3840	200m	720n	80	66	140	100		C	1	100M	15	50		C	BB	Hermetic		PC42
29	NSL3842	200m	720n	80	66	140	100	10	C	1	10M	15	50	500	C	BB	Plastic		PC58 Ø
30	NSL4470	1.0	530n	1.0k	67	140	100		C	1	500k	15	50		C	BA	Hermetic		PC15b
31	NSL293(1)	500m	650n	70	67	150	.01		E	1	10M	15	50			CF			PC39
32	NSL3830	200m	720n	80	66	180	100		C	1	100M	15	50		C	BB	Hermetic		PC42
33	NSL3832	200m	720n	80	66	180	100	10	C	1	10M	15	50	500	C	BB	Plastic		PC58 Ø
34	NSL4460	1.0	530n	1.0k	67	200	100		C	1	5.0M	15	50		C	BA	Hermetic		PC15b
35	NSL3820	200m	720n	80	66	220	100		C	1	100M	15	50		C	BB	Hermetic		PC42
36	NSL3822	200m	720n	80	66	220	100	10	C	1	10M	15	50	500	C	BB	Plastic		PC58 Ø
37	NSL4830	200m	560n	120	67	230	100		C	1	1.8M	15	50		C	BA	Hermetic		PC42
38	NSL4832	200m	560n	120	67	230	100	10	C	1	500k	15	50	500	C	BA	Plastic		PC58 Ø
39	CK1251	125m	715n	150	36	250	2.0		C	1	10M	5.0	2.0		C	BB			PC11 Ø
40	CL5M4L	500m	690n	170 Δ	57	250	2.0		C	1	67k	5.0	2.0		C	BB			PC11 Ø
41	VT54L	500m	550n	200	16	250	2.0		C	1	100k	5.0	2.0		C	BB			PC1a Ø
42	ORP12	200m		110	16	300		1.0k	G	1	10M					BA			None
43	LDR03			150		300		1.0k		1	10M					XX			None
44	LDR05			150		300		1.0k		1	10M					XX			None
45	LDR07			150		300		1.0k		1	10M					XX			None
46	CK1202	100m	715n	100		300	2.0		C	1	100M	5.0	2.0		C	BB			PC45 Ø
47	NSL3810	200m	720n	80	66	390	100		C	1	100M	15	50		C	BB	Hermetic		PC42
48	NSL3812	200m	720n	80	66	390	100	10	C	1	10M	15	50	500	C	BB	Plastic		PC58 Ø
49	NSL4820	200m	560n	120	67	400	100		C	1	15M	15	50		C	BA	Hermetic		PC42
50	NSL4822	200m	560n	120	67	400	100	10	C	1	1.5M	15	50	500	C	BA	Plastic		PC58 Ø
51	VT74L	250m	550n	100	16	450	2.0		C	1	500k	5.0	2.0		C	BB			PC3b Ø
52	CL5P4L	250m	690n	170 Δ	27	450	2.0		C	1	120k	5.0	2.0		C	BB			PC55b
53	CK1203	100m	715n	150		500	2.0		C	1	100M	5.0	2.0		C	BB			PC45 Ø
54	VT541	500m	550n	200	16	500	2.0		C	1	500k	5.0	2.0		C	BB			PC1a Ø
55	NSL4450	1.0	530n	1.0k	67	550	100		C	1	15M	15	50		C	BA	Hermetic		PC15b
56	RPY58A	100m	675n	50	47	600		50	G	1	200k	20				BA			PC21 Ø
57	CK1201	75m	715n	75		600	2.0		C	1	10M	5.0	2.0		C	BB			PC45 Ø
58	VT34L	125m	675n	200	16	600	2.0		C	1	100k	5.0	2.0			BB			PC2 Ø
59	RPY58B			50		700		50		1	0.2M					XX			None
60	VT51L	500m	735n	200	16	700	2.0		C	1	100k	5.0	2.0		C	BB			PC1a Ø
61	NSL294(1)	500m	650n	70	67	750	1.0		E	1	10M	15	50			CF			PC39
62	NSL394(1)	500m	710n	70	66	.75k	1.0		E	1	10M	15	50			BB			PC39
63	NSL2940	500m	650n	70	67	750	1.0		C	1	100k	15	50		C	DA	Hermetic		PC39
64	NSL2941	200m	650n	70	67	750	1.0	10	C	1	50k	15	50	500	C	DA	Plastic		PC40
65	NSL2942	200m	650n	70	67	750	1.0	10	C	1	50k	15	50	500	C	DA	Plastic		PC39
66	NSL2943	200m	650n	70	67	750	1.0		C	1	50k	15	50		C	DA	Plastic		PC60b
67	NSL494(1)	500m	550n	80	67	.75k	1.0		E	1	50k	15	50			BA			PC39
68	NSL3940	500m	720n	80	66	750	1.0		C	1	10M	15	50		C	BB	Hermetic		PC39
69	NSL3941	200m	720n	80	66	750	1.0	10	C	1	2.0M	15	50	500	C	BB	Plastic		PC39c Ø
70	NSL3942	200m	720n	80	66	750	1.0	10	C	1	2.0M	15	50	500	C	BB	Plastic		PC40 Ø
71	NSL3943	200m	720n	80	66	750	1.0		C	1	2.0M	15	50		C	BB	Plastic		PC60b
72	NSL4940	500m	560n	80	67	750	1.0		C	1	50k	15	50		C	BA	Hermetic		PC39
73	NSL4941	200m	560n	80	67	750	1.0	10	C	1	40k	15	50	500	C	BA	Plastic		None
74	NSL4942	200m	560n	80	67	750	1.0	10	C	1	40k	15	50	500	C	BA	Plastic		PC40 Ø
75	NSL4943	200m	560n	80	67	750	1.0		C	1	40k	15	50		C	BA	Plastic		PC60b
76	CK1204	125m	715n	200		750	2.0		C	1	100M	5.0	2.0		C	BB			PC45 Ø
77	CK1241	75m	715n	75		800	2.0		C	1	10M	5.0	2.0		C	BB			PC46 Ø
78	VT741	250m	675n	100	16	900	2.0		C	1	500k	5.0	2.0		C	BB			PC3b Ø
79	VT841L	175m	675n	100	16	900	2.0		C	1	500k	5.0	2.0		C	BB			PC3a Ø
80	VT471	600m	615n	150		900	2.0		B	1	300k	5.0				BS			None
81	CK1224	75m	655n	75		1.0k	2.0		C	1	10M	5.0	2.0		C	CF			PC45 Ø
82	CK1216	100m	715n	100	46	1.0k	2.0		C	1	10M	5.0	2.0		C	BB			PC52a Ø
83	VT401	600m	665n	100		1.0k	2.0		B	1	250k	5.0				BA			None
84	CK1205	125m	655n	150		1.0k	2.0		C	1	100M	5.0	2.0		C	CF			PC45 Ø
85	CL7P4L	125m	690n	170 Δ	27	1.0k	2.0		C	1	268k	5.0	2.0		C	BB			PC55c
86	VT541H	500m	550n	200	16	1.0k	2.0		C	1	1.0M	5.0	2.0		C	BB			PC1a Ø
87	NSL4810	200m	560n	120	66	1.0k	100		C	1	65M	15	50		C	BA	Hermetic		PC42
88	NSL4812	200m	560n	120	67	1.0k	100	10	C	1	5.0M	15	50	500	C	BA	Plastic		PC58 Ø
89	CK1242	100m	715n	100		1.2k	2.0		C	1	10M	5.0	2.0		C	BB			PC46 Ø
90	CL3P7L	125m	615n	100	27	1.2k	2.0		C	1	80k	5.0	2.0		C	BA			PC55 Ø
91	VT341	125m	675n	200	16	1.2k	2.0		C	1	500k	5.0	2.0			BB			PC2 Ø
92	EM1502	100m	695n	200	57	1.2k	100		E	1	30M					BB			PC46 Ø
93	EM1508	100m	695n	200	57	1.2k	100		E	1	30M					BB			PC46a Ø
94	VT741E	250m	675n	100	16	1.3k	2.0		C	1	500k	5.0	2.0		C	BB			PC5 Ø
95	VT50L	500m	565n	200	16	1.3k	2.0		C	1	100k	5.0	2.0		C	BA			PC1a Ø
96	VT511L	500m	735n	200	16	1.4k	2.0		C	1	200k	5.0	2.0		C	BB			PC1a Ø
97	CK1212	75m	610n	75	47	1.5k	2.0		C	1	500k	10	2.0		C	CF			PC52 Ø
98	CK1217	100m	655n	100	47	1.5k	2.0		C	1	10M	10	2.0		C	CF			PC52a Ø
99	CK1245	100m	655n	100		1.5k	2.0		C	1	1.0M	5.0	2.0		C	CF			PC46 Ø
100	CL5M5L	500m	550n	170 Δ	57	1.5k	2.0		C	1	100k	5.0	2.0		C	BA			PC11 Ø
101	CL5P5L	250m	550n	170 Δ	27	1.5k	2.0		C	1	75k	5.0	2.0		C	BA			PC55b
102	CL604L	75m	690n	170 Δ	57	1.5k	2.0		C	1	400k	5.0	2.0		C	BB			PC8 Ø
103	CL5M4	500m	690n	250 Δ	57	1.5k	2.0		C	1	400k	5.0	2.0		C	BB			PC11 Ø
104	VT542L	500m	550n	300	16	1.5k	2.0		C	1	1.0M	5.0	2.0		C	BB			PC1a Ø
105	VT70L	250m	565n	200	16	1.6k	2.0		C	1	1.0M	5.0	2.0		C	BA			PC3b Ø
106	NSL393(1)	500m	710n	70	66	1.7k	1.0		E	1	10M	15	50			BB			PC39

SYMBOLS AND CODES EXPLAINED IN INTERPRETER

16. LIGHT DEPENDENT RESISTORS (LDRs) - (Cont'd)

IN ORDER OF: (1) TYPE (2) No. ELEMENTS (3) Ron (4) Ev TEST (5) V MAX & (6) TYPE No

LINE No.	6 TYPE NUMBER	PD RATED MAX (W)	PEAK WAVE-LENGTH λp (m)	5 VOLT MAX (V)	TEMP RNG. CODE - +	3 LIGHT RESISTANCE TEST CONDITIONS Ron (Ω)	Ev 4 (fc)	Ev (lx)	SRC	2 No. ELE-MNTS	DARK RESISTANCE Roff (Ω)	SECs. AFTER (s)	Ev TEST (fc)	Ev TEST (lx)	SRC	MAT	FEATURES	LEAD CODE	DRAWING
1	NSL2930	500m	650n	70	67	1.7k	1.0		C	1	500k	15	50		C	DA	Hermetic		PC39
2	NSL2931	200m	650n	70	67	1.7k	1.0		C	1	200k	15	50		C	DA	Plastic		PC60
3	NSL2932	200m	650n	70	67	1.7k	1.0		C	1	200k	15	50		C	DA	Plastic		PC40
4	NSL2933	200m	650n	70	67	1.7k	1.0		C	1	200k	15	50		C	DA	Plastic		PC60b
5	NSL493(1)	500m	550n	80	67	1.7k	1.0		E	1	400k	15	50			BA			PC39
6	NSL3930	500m	720n	80	66	1.7k	1.0		C	1	10M	15	50		C	BB	Hermetic		PC39
7	NSL3931	200m	720n	80	66	1.7k	1.0	10	C	1	2.0M	15	50	500	C	BB	Plastic		PC39c Ø
8	NSL3932	200m	720n	80	66	1.7k	1.0	10	C	1	2.0M	15	50	500	C	BB	Plastic		PC40 Ø
9	NSL3933	200m	720n	80	66	1.7k	1.0		C	1	2.0M	15	50		C	BB	Plastic		PC60b
10	NSL4930	500m	560n	80	67	1.7k	1.0		C	1	400k	15	50		C	BA	Hermetic		PC39
11	NSL4931	200m	560n	80	67	1.7k	1.0	10	C	1	200k	15	50	500	C	BA	Plastic		None
12	NSL4932	200m	560n	80	67	1.7k	1.0	10	C	1	200k	15	50	500	C	BA	Plastic		PC40 Ø
13	NSL4933	200m	560n	80	67	1.7k	1.0		C	1	200k	15	50		C	BA	Plastic		PC60b
14	VT30L	125m	565n	200	16	1.8k	2.0			1	100k	5.0	2.0		C	BA			PC2 Ø
15	VT82L	175m	515n	100	16	1.9k	2.0		C	1	100k	5.0	2.0		C	BA			PC3a Ø
16	VT32L	125m	515n	200	16	1.9k	2.0		C	1	100k	5.0	2.0		C	BA			PC2 Ø
17	VTL7A1	400m		10	27	2.0k			L	1	15M	5.0				XX			PC63
18	MKY5H26	40m	560n	100	37	2.0kØ		10	C	1	100k	10		100	C	BA			PC81b
19	MKB1-7H26P	40m	700n	150	26	2.0kØ		10	C	1	1.5M	10				BB			PC14 Ø
20	MKY7H26	50m	560n	150	37	2.0kØ		10	C	1	100k	10		100	C	BA			PC81a
21	NSL2129/3	200m	270n	80	67	2.0k	1.0		B	1	200k	15	50			BA			PC60
22	MKY1-5H26	50m	550n	100		2.0kØ	1.0		C	1	200k	10	40			BA			PC14 Ø
23	MKB1-7H28P	60m	690n	150		2.0kØ	1.0		C	1	1.5M	10	40			BB			PC14 Ø
24	MKY1-7H26	80m	550n	150		2.0kØ	1.0	10	C	1	100k	10	40			BA			PC14 Ø
25	MPY12C28	200m	520n	200		2.0kØ	1.0		C	1	1.0M	10	40			BA			PC14 Ø
26	MPY12H28	300m	520n	200		2.0kØ	1.0		C	1	1.0M	10	40			BA			PC14 Ø
27	CL9P4L	50m	690n	100	27	2.0k	2.0		C	1	520k	5.0	2.0		C	BB			PC55a Ø
28	CL904L	50m	690n	100 Δ	57	2.0k	2.0		C	1	520k	5.0	2.0		C	BB			PC10 Ø
29	VT241	50m	675n	100	16	2.0k	2.0			1	500k	5.0	2.0		C	BB			PC1 Ø
30	VT941	80m	675n	100	16	2.0k	2.0		C	1	500k	5.0	2.0		C	BB			PC3 Ø
31	VT771	250m	615n	150	16	2.0k	2.0		C	1	2.0M	5.0	2.0		C	BA			PC3b Ø
32	VT542	500m	550n	300	16	2.0k	2.0		C	1	1.0M	5.0	2.0		C	BB			PC1a Ø
33	CK1250	100m	715n	100	46	2.0k	3.0		C	1	10M	5.0			C	BB			TO-5
34	VT311L	125m	735n	200	16	2.1k	2.0		C	1	500k	5.0	2.0		C	BB			PC2 Ø
35	P552	100m	660n	100	36	2.2k		10		1	10M	10		10	C	BB			PC65a
36	NSL3870	200m	720n	320	66	2.2k	100		C	1	1.0G	15	50		C	BB	Hermetic		PC42
37	NSL3872	200m	720n	320	66	2.2k	100	10	C	1	100M	15	50	500	C	BB	Plastic		PC58 Ø
38	VT211	50m	735n	100	16	2.3k	2.0		C	1	500k	5.0	2.0		C	BB			PC1 Ø
39	VT511	500m	735n	200	16	2.3k	2.0		C	1	500k	5.0	2.0		C	BB			PC1a Ø
40	VT341H	125m	675n	300	16	2.4k	2.0		C	1	1.0M	5.0	2.0			BB			PC2 Ø
41	EM1507	100m	514n	200	59	2.5k	100		E	1	1.0M					BA			PC46 Ø
42	NSL4440	1.0	530n	1.0k	67	2.5k	100		C	1	50M	15	50		C	BA	Hermetic		PC15b
43	NSL4442	500m	530n	1.0k	67	2.5k	100	10	C	1	10M	15	50	500	C	BA	Plastic		PC40b
44	VT501	500m	565n	200	16	2.6k	2.0		C	1	200k	5.0	2.0		C	BA			PC1a Ø
45	VT521	500m	515n	200	16	2.6k	2.0		C	1	100k	5.0	2.0		C	BA			PC1a Ø
46	VT721	250m	515n	300	16	2.6k	2.0		C	1	1.0M	5.0	2.0		C	BA			PC3b Ø
47	VT371		725n	100		2.7k	2.0		C	1	2.0M	5.0				DA			None
48	CL5P4	250m	690n	250 Δ	27	2.7k	2.0		C	1	720k	5.0	2.0		C	BB			PC55b
49	MKY5C38E	30m	560n	150	37	3.0kØ		10	C	1	300k	10		100	C	BA			PC75
50	MKY7C38E	50m	560n	150	37	3.0kØ		10	C	1	300M	10		100	C	BA			PC75a
51	MKY54C348	30m	560n	150	37	3.0kØ		10	C	1	500k	10		100	C	BA			PC76a
52	MKY76C348	50m	560n	150	37	3.0kØ		10	C	1	500k	10		100	C	BA			PC76
53	CK1208	75m	615n	75	36	3.0k	2.0		C	1	1.0M	5.0	2.0		C	CF			PC45 Ø
54	CK1266	75m	615n	75		3.0k	2.0		C	1	1.0M	5.0	2.0		C	CF			PC46 Ø
55	CK1265	100m	655n	100		3.0k	2.0		C	1	10M	5.0	2.0		C	CF			PC46 Ø
56	VT871	175m	615n	100	16	3.0k	2.0		C	1	10M	5.0	2.0		C	BA			PC3a Ø
57	CK1255	150m	610n	200	37	3.0k	2.0		C	1	1.0M	5.0	2.0		C	CF			PC11 Ø
58	VT301	125m	565n	200	16	3.0k	2.0		C	1	200k	5.0	2.0		C	BA			PC2 Ø
59	VT701	250m	565n	200	16	3.0k	2.0		C	1	5.0M	5.0	2.0		C	BA			PC3b Ø
60	VT801	175m	565n	200	16	3.0k	2.0		C	1	250k	5.0	2.0		C	BA			PC3a Ø
61	CK1293	1.0	610n	450	47	3.0k	2.0		C	1	100M	10	2.0		C	CF			PC15a Ø
62	NSL3860	200m	720n	320	66	3.0k	100		C	1	1.0G	15	50		C	BB	Hermetic		PC42
63	NSL3862	200m	720n	320	66	3.0k	100	10	C	1	100M	15	50	500	C	BB	Plastic		PC58 Ø
64	VT701E	250m	565n	100	16	3.3k	2.0		C	1	300k	5.0	2.0		C	BA			PC5 Ø
65	CL7P5L	125m	550n	170 Δ	27	3.3k	2.0		C	1	165k	5.0	2.0		C	BA			PC55c
66	NSL384	200m	700n	80	66	3.5k	1.0	10	E	1	100M	15	50	500		BB			PC42 Ø
67	NSL484	200m	550n	120	67	3.5k	1.0	10	E	1	250k	15	50	500		BA			PC42 Ø
68	CK1243	100m	715n	100		3.5k	2.0		C	1	10M	5.0	2.0		C	BB			PC46 Ø
69	VT211H	50m	735n	100	16	3.5k	2.0		C	1	1.0M	5.0	2.0		C	BB			PC1 Ø
70	CK1218	100m	610n	150	47	3.5k	2.0		C	1	1.0M	10	2.0		C	CF			PC52a Ø
71	CL603AL	75m	735n	170 Δ	57	3.5k	2.0		C	1	23M	5.0	2.0		C	BB			PC8 Ø
72	CL607L	75m	615n	170 Δ	57	3.5k	2.0		C	1	700k	5.0	2.0		C	BA			PC8 Ø
73	P534	100m	560n	200	36	3.7k		10		1	50k	10		10	C	BB			PC65a
74	NSL4870	200m	560n	320	67	3.8k	100		C	1	20M	15	50		C	BA	Hermetic		PC42
75	NSL4872	200m	560n	320	67	3.8k	100	10	C	1	2.0M	15	50	500	C	BA	Plastic		PC58 Ø
76	VT321	125m	515n	200	16	3.9k	2.0		C	1	200k	5.0	2.0		C	BA			PC2 Ø
77	NSL3850	200m	720n	320	66	3.9k	100		C	1	1.0G	15	50		C	BB	Hermetic		PC42
78	NSL3852	200m	720n	320	66	3.9k	100	10	C	1	100M	15	50	500	C	BB	Plastic		PC58 Ø
79	NSL392(1)	500m	710n	70	66	4.0k	1.0		E	1	10M	15	50			BB			PC39
80	NSL492(1)	500m	550n	80	67	4.0k	1.0		E	1	3.2M	15	50			BA			PC39
81	NSL3920	500m	720n	80	66	4.0k	1.0		C	1	10M	15	50		C	BB	Hermetic		PC39
82	NSL3921	200m	720n	80	66	4.0k	1.0	10	C	1	2.0M	15	50	500	C	BB	Plastic		PC39c Ø
83	NSL3922	200m	720n	80	66	4.0k	1.0	10	C	1	2.0M	15	50	500	C	BB	Plastic		PC40 Ø
84	NSL3923	200m	720n	80	66	4.0k	1.0		C	1	2.0M	15	50		C	BB	Plastic		PC60b
85	NSL4920	500m	560n	80	67	4.0k	1.0		C	1	2.0M	15	50		C	BB	Hermetic		PC39
86	NSL4921	200m	560n	80	67	4.0k	1.0	10	C	1	1.0M	15	50	500	C	BA	Plastic		None
87	NSL4922	200m	560n	80	67	4.0k	1.0	10	C	1	1.0M	15	50	500	C	BA	Plastic		PC40 Ø
88	NSL4923	200m	560n	80	67	4.0k	1.0		C	1	1.0M	15	50		C	BB	Plastic		PC60b
89	NORP13	250m	550n	320	67	4.0k	1.0	10	E	1	500k	15	50	500	E	BA			PC60a
90	VT271	50m	615n	50	16	4.0k	2.0			1	2.5M	5.0	2.0		C	BA			PC1 Ø
91	VT811	175m	735n	70		4.0k	2.0		C	1	10M	5.0	2.0		C	BB			PC3a Ø
92	CK1249	100m	615n	100	36	4.0k	2.0		C	1	1.0M	5.0	2.0		C	CF			PC46 Ø
93	VT241H	50m	675n	100	16	4.0k	2.0			1	1.0M	5.0	2.0		C	BB			PC1 Ø
94	CK1232	200m	610n	175	47	4.0k	2.0		C	1	1.0M	10	2.0		C	CF			PC52b Ø
95	CK1256	250m	610n	250	37	4.0k	2.0		C	1	10M	5.0	2.0		C	CF			PC11 Ø
96	VT501H	500m	565n	300	16	4.0k	2.0		C	1	500k	5.0	2.0		C	BA			PC1a Ø
97	VT311	125m	735n	200	16	4.2k	2.0		C	1	1.0M	5.0	2.0		C	BB			PC2 Ø
98	VT201	50m	565n	100	16	4.3k	2.0		C	1	500k	5.0	2.0		C	BA			PC1 Ø
99	CL9P7HLL	50m	620n	70	27	4.5k	2.0		C	1	3.0M	5.0	2.0		C	BA			PC55a Ø
100	VT511H	500m	735n	300	16	4.6k	2.0		C	1	1.0M	5.0	2.0		C	BB			PC1a Ø
101	NSL4860	200m	560n	320	67	4.6k	100		C	1	130M	15	50		C	BA	Hermetic		PC42
102	NSL4862	200m	560n	320	67	4.6k	100	10	C	1	15M	15	50	500	C	BA	Plastic		PC58 Ø
103	VT342L	125m	675n	300	16	4.8k	2.0		C	1	1.0M	5.0	2.0			BB			PC2 Ø
104	VT721H	250m	515n	300	16	4.8k	2.0		C	1	2.0M	5.0	2.0		C	BA			PC3b Ø
105	MKY4H37	30m	560n	150	37	5.0kØ		10	C	1	500k	10		100	C	BA			PC81
106	MKY5H38	40m	560n	150	37	5.0kØ		10	C	1	500k	10		100	C	BA			PC81b
107	MKY7H38	50m	560n	150	37	5.0kØ		10	C	1	500k	10		100	C	BA			PC81a
108	MKB4H38	50m	700n	150		5.0kØ	1.0		C	1	50M	10	40			BB			PC14 Ø
109	MKB5H38	75m	700n	150		5.0kØ	1.0		C	1	100M	10	40			BB			PC14 Ø
110	MKB7H38	150m	700n	150		5.0kØ	1.0		C	1	100M	10	40			BA			PC14 Ø

SYMBOLS AND CODES EXPLAINED IN INTERPRETER

16. LIGHT DEPENDENT RESISTORS (LDRs) - (Cont'd)

IN ORDER OF: (1) TYPE (2) No. ELEMENTS (3) Ron (4) Ev TEST (5) V MAX & (6) TYPE No

LINE No.	6 TYPE NUMBER	PD RATED MAX (W)	PEAK WAVE-LENGTH λp (m)	5 VOLT MAX (V)	TEMP RNG. CODE - +	3 LIGHT RESISTANCE TEST CONDITIONS Ron (Ω)	Ev 4 (fc)	Ev (lx)	SRC	2 No. ELE-MNTS	DARK RESISTANCE Roff (Ω)	SECs. AFTER (s)	Ev TEST (fc)	Ev TEST (lx)	SRC	MAT	FEATURES	LEAD CODE	DRAWING
1	MKY1-4H37	50m	550n	150		5.0kØ	1.0		C	1	500k	10	40			BA			PC14 Ø
2	MKY1-5H37	50m	550n	150		5.0kØ	1.0		C	1	400k	10	40			BA			PC14 Ø
3	MKY1-5H38	50m	550n	150		5.0kØ	1.0		C	1	500k	10	40			BA			PC14 Ø
4	MKY1-7H37	80m	550n	150		5.0kØ	1.0	10	C	1	400k	10	40			BA			PC14 Ø
5	MKY1-7H38	80m	550n	150		5.0kØ	1.0	10	C	1	500k	10	40			BA			PC14 Ø
6	MKY1-7H39	80m	550n	150		5.0kØ	1.0	10	C	1	1.0M	10	40			BA			PC14 Ø
7	MPB2-7C39	150m	590n	150		5.0kØ	1.0		C	1	3.0M	10	40			BB			PC14 Ø
8	MPB2-7H39	200m	590n	150		5.0kØ	1.0	10	C	1	3.0M	10	40			BB			PC14 Ø
9	MPY12C39	300m	520n	200		5.0kØ	1.0		C	1	2.0M	10	40			BA			PC14 Ø
10	MPY12H39	500m	520n	200		5.0kØ	1.0		C	1	2.0M	10	40			BA			PC14 Ø
11	MPY25C38	750m	520n	500		5.0kØ	1.0		C	1	5.0M	10	40			BA			PC14 Ø
12	MPY25R38	750m	520n	500		5.0kØ	1.0		C	1	5.0M	10	40			BA			PC14 Ø
13	MPY25H38	1.0	520n	800		5.0kØ	1.0		C	1	5.0M	10	40			BA			PC14 Ø
14	CK1219	100m	550n	100	47	5.0k	2.0		C	1	1.0M	10	2.0		C	CF			PC52a Ø
15	VT521H	500m	515n	300	16	5.0k	2.0		C	1	500k	5.0	2.0		C	BA			PC1a Ø
16	CK1292	1.0	550n	450	47	5.0k	2.0		C	1	10M	10	2.0		C	CF			PC15a Ø
17	NSL364	100m	700n	70	66	5.2k	1.0	10	E	1	100M	15	50	500		BB			PC39b Ø
18	NSL464	100m	550n	80	67	5.2k	1.0	10	E	1	700k	15	50	500		BA			PC39b Ø
19	NSL447(1)	1.0	550n	1.0k	67	5.5k	1.0		E	1	1.0M	15	50			BA			PC15b
20	VT721HE	250m	515n	300	16	5.5k	2.0		C	1	2.0M	5.0	2.0		C	BA			PC5 Ø
21	NSL444(1)	1.0	550n	1.0k	67	5.5k	35		E	1	10M	15	50			BA			PC15b
22	RPY71	50m		50	47	6.0k		10	G	1	600k	20		10	G	BA			PC21a ⊠
23	VT272	50m	615n	50	16	6.0k	2.0			1	5.0M	5.0	2.0		C	BA			PC1 Ø
24	CK1209	75m	550n	75	37	6.0k	2.0		C	1	1.0M	5.0	2.0		C	CF			PC45 Ø
25	CK1211	75m	655n	75	47	6.0k	2.0		C	1	1.0M	10	2.0		C	CF			PC52 Ø
26	CK1261	75m	515n	75		6.0k	2.0		C	1	500k	5.0	2.0		C	BA			PC46 Ø
27	CL903L	50m	735n	100 Δ	57	6.0k	2.0		C	1	40M	5.0	2.0		C	BB			PC10 Ø
28	CL907L	50m	615n	100 Δ	57	6.0k	2.0		C	1	1.2M	5.0	2.0		C	BA			PC10 Ø
29	VT212L	50m	735n	100	16	6.0k	2.0		C	1	5.0M	5.0	2.0		C	BB			PC1 Ø
30	VT912L	80m	735n	100	16	6.0k	2.0		C	1	5.0M	5.0	2.0		C	BB			PC3 Ø
31	VT301H	125m	565n	200	16	6.0k	2.0		C	1	1.0M	5.0	2.0		C	BA			PC2 Ø
32	CL5P5M	250m	550n	250	27	6.0k	2.0		C	1	400k	5.0	2.0		C	BA			PC55b
33	VT431	600m	550n	350		6.0k	2.0		B	1	1.0M	5.0				BA			None
34	CK1287	600m	655n	300	47	6.5k	2.0		C	1	100M	10	2.0		C	CF			PC53 Ø
35	CK1290	1.0	510n	450	47	6.5k	2.0		C	1	10M	10	2.0		C	BA			PC15a Ø
36	VT221	50m	735n	100	16	6.8k	2.0		C	1	750k	5.0	2.0		C	BA			PC1 Ø
37	CK1214	75m	510n	75	47	7.0k	2.0		C	1	500k	10	2.0		C	CF			PC52 Ø
38	CK1221	75m	515n	75		7.0k	2.0		C	1	500k	5.0	2.0		C	BA			PC45 Ø
39	CK1220	125m	510n	100	47	7.0k	2.0		C	1	1.0M	10	2.0		C	BA			PC52a Ø
40	CK1244	100m	715n	100		7.0k	2.0		C	1	100M	5.0	2.0		C	BB			PC46 Ø
41	CK1248	125m	615n	100	36	7.0k	2.0		C	1	10M	5.0	2.0		C	CF			PC46 Ø
42	VT342	125m	675n	300	16	7.0k	2.0		C	1	5.0M	5.0	2.0			BB			PC2 Ø
43	CL5M3	500m	735n	250 Δ	57	7.2k	2.0		C	1	48M	5.0	2.0		C	BB			PC11 Ø
44	CL5M7	500m	615n	250 Δ	57	7.2k	2.0		C	1	1.4M	5.0	2.0		C	BA			PC11 Ø
45	P722-7R	150m	560n	200	36	7.5k		10		1	500k	10		10	C	BB			PC55e
46	MKY1-5C38E	45m	550n	150		7.5k	1.0		C	1	300k	10	40			BA			PC14 Ø
47	MKY1-7C38E	70m	550n	150		7.5k	1.0		C	1	300k	10	40			BA			PC14 Ø
48	NSL297(1)	500m	650n	250	67	7.5k	1.0		E	1	100M	15	50			CF			PC60
49	NSL397(1)	500m	710n	250	66	7.5k	1.0		E	1	20M	15	50			BB			PC39
50	NSL2970	500m	650n	250	67	7.5k	1.0		C	1	5.0M	15	50		C	DA	Hermetic		PC39
51	NSL2971	200m	650n	250	67	7.5k	1.0	10	C	1	1.0M	15	50	500	C	DA	Plastic		PC60
52	NSL2972	200m	650n	250	67	7.5k	1.0	10	C	1	1.0M	15	50	500	C	DA	Plastic		PC40
53	NSL2973	200m	650n	250	67	7.5k	1.0		C	1	1.0M	15	50		C	DA	Plastic		PC60b
54	NSL497(1)	500m	550n	320	67	7.5k	1.0		E	1	540k	15	50			BA			PC39
55	NSL3970	500m	720n	320	66	7.5k	1.0		C	1	20M	15	50		C	BB	Hermetic		PC39
56	NSL3971	200m	720n	320	66	7.5k	1.0	10	C	1	5.0M	15	50	500	C	BB	Plastic		PC39c Ø
57	NSL3972	200m	720n	320	66	7.5k	1.0	10	C	1	5.0M	15	50	500	C	BB	Plastic		PC40 Ø
58	NSL3973	200m	720n	320	66	7.5k	1.0		C	1	5.0M	15	50		C	BB	Plastic		PC60b
59	NSL4970	500m	560n	320	67	7.5k	1.0		C	1	500k	15	50		C	BA	Hermetic		PC39
60	NSL4971	200m	560n	320	67	7.5k	1.0	10	C	1	200k	15	50	500	C	BA	Plastic		None
61	NSL4972	200m	560n	320	67	7.5k	1.0	10	C	1	200k	15	50	500	C	BA	Plastic		PC40 Ø
62	NSL4973	200m	560n	320	67	7.5k	1.0		C	1	200k	15	50		C	BA	Plastic		PC60b
63	CL605L	75m	550n	170 Δ	57	7.5k	2.0		C	1	500k	5.0	2.0		C	BA			PC8 Ø
64	CK1233	200m	550n	175	47	7.5k	2.0		C	1	1.0M	10	2.0		C	CF			PC52b Ø
65	CL604M	75m	690n	250 Δ	57	7.5k	2.0		C	1	2.0M	5.0	2.0		C	BB			PC8 Ø
66	VT212	50m	735n	100	16	7.8k	2.0		C	1	5.0M	5.0	2.0		C	BB			PC1 Ø
67	VT321H	125m	515n	200	16	7.8k	2.0		C	1	1.0M	5.0	2.0		C	BA			PC2 Ø
68	NSL383	200m	700n	80	66	8.0k	1.0	10	E	1	100M	15	50	500		BB			PC42 Ø
69	NSL483	200m	550n	120	67	8.0k	1.0	10	E	1	1.8M	15	50	500		BA			PC42 Ø
70	VT202	50m	565n	100	16	8.0k	2.0		C	1	750k	5.0	2.0		C	BA			PC1 Ø
71	VT242L	50m	675n	100	16	8.0k	2.0			1	1.0M	5.0	2.0		C	BB			PC1 Ø
72	VT811H	175m	735n	100		8.0k	2.0		C	1	10M	5.0	2.0		C	BB			PC3a Ø
73	VT902	80m	565n	100	16	8.0k	2.0		C	1	750k	5.0	2.0		C	BA			PC3 Ø
74	CK1253	150m	655n	200	37	8.0k	2.0		C	1	10M	5.0	2.0		C	CF			PC11 Ø
75	VT502L	500m	565n	300	16	8.0k	2.0		C	1	1.0M	5.0	2.0		C	BA			PC1a Ø
76	NSL4850	200m	560n	320	67	8.0k	100		C	1	200M	15	50		C	BA	Hermetic		PC42
77	NSL4852	200m	560n	320	67	8.0k	100	10	C	1	20M	15	50	500	C	BA	Plastic		PC58 Ø
78	P1096-06	100m	550n	100	36	8.4k		10		1	500k	10		10	C	BB			PC55f
79	VT312L	125m	735n	300	16	8.4k	2.0		C	1	5.0M	5.0	2.0		C	BB			PC2 Ø
80	VT773	250m	615m	300	16	8.4k	2.0		C	1	10M	5.0	2.0		C	BA			PC3b Ø
81	P559	50m	540n	200	36	8.5k		10		1	100k	10		10	C	BB			PC65
82	CK1210	75m	715n	75	46	8.5k	2.0		C	1	10M	5.0	2.0		C	BB			PC52 Ø
83	NORP12	250m	550n	320	67	9.0k	1.0	10	E	1	1.0M	15	50	500	E	BA			PC60a
84	CK1213	75m	550n	75	47	9.0k	2.0		C	1	500k	10	2.0		C	CF			PC52 Ø
85	CL5M2L	500m	515n	170 Δ	57	9.0k	2.0		C	1	600k	5.0	2.0		C	BA			PC11 Ø
86	VT702L	250m	565n	200	07	9.0k	2.0		C	1	5.0M	5.0	2.0		C	BA	CERAMIC		PC3b
87	CL5M5	500m	550n	250 Δ	57	9.0k	2.0		C	1	600k	5.0	2.0		C	BA			PC11 Ø
88	CL5P5	250m	550n	250 Δ	27	9.0k	2.0		C	1	450k	5.0	2.0		C	BA			PC55b
89	CL5P9M	250m	550n	250	27	9.0k	2.0		C	1	6.0M	5.0	2.0		C	BA			PC55b
90	CK1288	600m	555n	300	47	9.0k	2.0		C	1	100M	10	2.0		C	CF			PC53 Ø
91	VT402	600m	665n	300		9.0k	2.0		B	1	1.0M	5.0				BA			None
92	VT522L	500m	515n	300	16	9.0k	2.0		C	1	1.0M	5.0	2.0		C	BA			PC1a Ø
93	VT512L	500m	735n	300	16	9.2k	2.0		C	1	20M	5.0	2.0		C	BB			PC1a Ø
94	MKY5C46	30m	560n	100	37	10kØ		10	C	1	200k	10		100	C	BA			PC75
95	MKY54C46	30m	560n	100	37	10kØ		10	C	1	200k	10		100	C	BA			PC76a
96	MPB2-43C49	30m	600n	100	37	10kØ		10	C	1	500k	10		100	C	BA			PC74
97	MKB2-12H49	200m	610n	150	26	10kØ		10	C	1	10M	10				BB			PC14 Ø
98	MKY4H48	30m	560n	150	37	10kØ		10	C	1	10M	10		100	C	BA			PC81
99	MKY5H49	40m	560n	150	37	10kØ		10	C	1	1.0M	10		100	C	BA			PC81b
100	MKY7H49	50m	560n	150	37	10kØ		10	C	1	1.0M	10		100	C	BA			PC81a
101	MPB2-76C49	80m	600n	200	37	10kØ		10	C	1	5.0M	10		100	C	BA			PC76
102	MPY20C48	500m	560n	1.0k	37	10kØ		10	C	1	1.0M	10		100	C	BA			PC80
103	MKY1-4H48	50m	550n	150		10kØ	1.0		C	1	1.0M	10	40			BA			PC14 Ø
104	MKY1-5H48	50m	550n	150		10kØ	1.0		C	1	1.0M	10	40			BA			PC14 Ø
105	MKY1-5H49	50m	550n	150		10kØ	1.0		C	1	1.0M	10	40			BA			PC14 Ø
106	MKY1-7H48	80m	550n	150		10kØ	1.0	10	C	1	2.0M	10	40			BA			PC14 Ø
107	MKY1-7H49	80m	550n	150		10kØ	1.0	10	C	1	2.0M	10	40			BA			PC14 Ø
108	MPB2-7C49	150m	590n	150		10kØ	1.0		C	1	5.0M	10	40			BB			PC14 Ø
109	MPB2-7H49	200m	590n	150		10kØ	1.0	10	C	1	5.0M	10	40			BB			PC14 Ø
110	MPB2-12H49	300m	590n	150		10kØ	1.0		C	1	10M	10	40			BB			PC14 Ø

SYMBOLS AND CODES EXPLAINED IN INTERPRETER

16. LIGHT DEPENDENT RESISTORS (LDRs) - (Cont'd)

IN ORDER OF: (1) TYPE (2) No. ELEMENTS (3) Ron (4) Ev TEST (5) V MAX & (6) TYPE No

LINE No.	6 TYPE NUMBER	PD RATED MAX (W)	PEAK WAVE-LENGTH λp (m)	5 VOLT MAX (V)	TEMP RNG. CODE - +	3 LIGHT RESISTANCE TEST CONDITIONS Ron (Ω)	Ev 4 (fc)	Ev (lx)	SRC	2 No. ELE-MNTS	DARK RESISTANCE Roff (Ω)	SECs. AFTER (s)	Ev TEST (fc)	Ev TEST (lx)	SRC	MAT	FEATURES	LEAD CODE	DRAWING
1	MPB2-4H48	60m	590n	200		10kØ	1.0		C	1	5.0M	10	40			BB			PC14 Ø
2	MPB2-5H49	120m	590n	200		10kØ	1.0		C	1	5.0M	10	40			BB			PC14 Ø
3	MPY12C49	300m	520n	300		10kØ	1.0		C	1	5.0M	10	40			BA			PC14 Ø
4	MPY12H46	500m	520n	300		10kØ	1.0		C	1	600k	10	40			BA			PC14 Ø
5	MPY12H49	500m	520n	300		10kØ	1.0		C	1	5.0M	10	40			BA			PC14 Ø
6	MPY25C49	750m	520n	500		10kØ	1.0		C	1	5.0M	10	40			BA			PC14 Ø
7	MPY25R49	750m	520n	500		10kØ	1.0		C	1	5.0M	10	40			BA			PC14 Ø
8	MPY25H49	1.0	520n	800		10kØ	1.0		C	1	5.0M	10	40			BA			PC14 Ø
9	CK1264	100m	515n	100		10k	2.0		C	1	10M	5.0	2.0		C	BA			PC46 Ø
10	CL9P5L	50m	550n	100	27	10k	2.0		C	1	670k	5.0	2.0		C	BA			PC55a Ø
11	CL905L	50m	550n	100 Δ	57	10k	2.0		C	1	670k	5.0	2.0		C	BA			PC10 Ø
12	VT222	50m	515n	100	16	10k	2.0		C	1	1.0M	5.0	2.0		C	BA			PC1 Ø
13	CK1225	125m	615n	125		10k	2.0		C	1	10M	5.0	2.0		C	CF			PC45 Ø
14	CL7P7HL	125m	620n	170	27	10k	2.0		C	1	6.7M	5.0	2.0		C	BA			PC55c
15	CK1231	200m	655n	175	47	10k	2.0		C	1	10M	10	2.0		C	CF			PC52b Ø
16	CK1246	150m	715n	200		10k	2.0		C	1	100M	5.0	2.0		C	BB			PC46 Ø
17	CK1257	150m	515n	200	37	10k	2.0		C	1	1.0M	5.0	2.0		C	BA			PC11 Ø
18	VT702LE	250m	565n	200	07	10k	2.0		C	1	1.0M	5.0	2.0		C	BA	EPOXY		PC5
19	CK1254	250m	655n	300	37	10k	2.0		C	1	10M	5.0	2.0		C	CF			PC11 Ø
20	VT302L	125m	565n	300	16	10k	2.0		C	1	1.0M	5.0	2.0		C	BA			PC2 Ø
21	VT732	250m	550n	300	16	10k	2.0		C	1	10M	5.0	2.0		C	BA			PC3b Ø
22	VT432	600m	550n	350		10k	2.0		B	1	1.0M	5.0				BA			None
23	NSL446(1)	1.0	550n	1.0k	67	11k	1.0		E	1	5.0M	15	50			BA			PC15b
24	CL905HLL	50m	550n	60		11k	2.0		C	1						BA			PC13 Ø
25	VT23L	50m	550n	100	16	11k	2.0		C	1	1.0M	5.0	2.0		C	BA			PC1 Ø
26	VT93L	80m	550n	100	16	11k	2.0		C	1	1.0M	5.0	2.0		C	BA			PC3 Ø
27	CL5M9M	500m	550n	170 Δ	57	11k	2.0		C	1	3.7M	5.0	2.0		C	BA			PC11 Ø
28	VT732E	250m	550n	300	16	11k	2.0		C	1	10M	5.0	2.0		C	BA			PC5 Ø
29	NSL363	100m	700n	70	66	12k	1.0	10	E	1	100M	15	50	500		BB			PC39b Ø
30	NSL463	100m	550n	80	67	12k	1.0	10	E	1	2.5M	15	50	500		BA			PC39b Ø
31	CK1222	75m	515n	75		12k	2.0		C	1	10M	5.0	2.0		C	BA			PC45 Ø
32	CK1262	75m	515n	75		12k	2.0		C	1	1.0M	5.0	2.0		C	BA			PC46 Ø
33	CK1230	200m	715n	175	46	12k	2.0		C	1	10M	5.0	2.0		C	BB			PC52b Ø
34	CK1258	200m	515n	200	37	12k	2.0		C	1	100M	5.0	2.0		C	BA			PC11 Ø
35	VT533L	500m	550n	200	16	12k	2.0		C	1	5.0M	5.0	2.0		C	BA			PC1a Ø
36	CK1252	250m	715n	300	36	12k	2.0		C	1	100M	5.0	2.0		C	BB			PC11 Ø
37	CK1286	600m	715n	300	47	12k	2.0		C	1	100M	10	2.0		C	BB			PC53 Ø
38	CK1289	600m	515n	300	47	12k	2.0		C	1	100M	10	2.0		C	CF			PC53 Ø
39	CK1291	1.0	510n	450	47	12k	2.0		C	1	10M	10	2.0		C	BA			PC15a Ø
40	P201E	100m	560n	200	36	13k		10		1	10M	10		10	C	BB			PC65a
41	P380	50m	620n	200	36	13k		10		1	20M	10		10	C	BB			PC65a
42	P380-7R	50m	620n	200	36	13k		10		1	20M	10		10	C	BB			PC55e
43	NSL314	50m	700n	70	66	14k	1.0	10	E	1	100M	15	50	500		BB			PC39a Ø
44	NSL3142	50m	700n	70		14k	1.0	10		1	10M	15	50	500		BB			PC41 Ø
45	NSL414	50m	550n	80	67	14k	1.0	10	E	1	200k	15	50	500		BA			PC39a Ø
46	NSL4142	50m	550n	80		14k	1.0	10		1	100k	15	50	500		BA			PC41 Ø
47	CK1234	200m	510n	200	47	14k	2.0		C	1	1.0M	10	2.0		C	BA			PC52b Ø
48	VT333L	125m	550n	200	16	14k	2.0		C	1	5.0M	5.0	2.0			BA			PC2 Ø
49	VT343L	125m	675n	300	16	14k	2.0		C	1	10M	5.0	2.0			BB			PC2 Ø
50	P722-5R	70m	560n	100	36	15k		10		1	500k	10		10	C	BB			PC55d
51	MPY12C49E	300m	520n	200		15k	1.0		C	1	2.0M	10	40			BA			PC14 Ø
52	CL9P9LL	50m	550n	70	27	15k	2.0		C	1	10M	5.0	2.0		C	BA			PC55a Ø
53	CK1226	100m	550n	100		15k	2.0		C	1	1.0M	5.0	2.0		C	CF			PC45 Ø
54	CL904N	50m	690n	100 Δ	57	15k	2.0		C	1	4.0M	5.0	2.0		C	BB			PC10 Ø
55	VT202H	50m	565n	100	16	15k	2.0		C	1	1.0M	5.0	2.0		C	BA			PC1 Ø
56	VT242	50m	675n	100	16	15k	2.0			1	10M	5.0	2.0		C	BB			PC1 Ø
57	VT912	80m	735n	100	16	15k	2.0		C	1	20M	5.0	2.0		C	BB			PC3 Ø
58	CK1267	125m	615n	200	36	15k	2.0		C	1	10M	5.0	2.0		C	CF			PC46 Ø
59	VT322L	125m	515n	300	16	15k	2.0		C	1	5.0M	5.0	2.0		C	BA			PC2 Ø
60	P577-04	300m	570n	300	36	16k		10		1	3.0M	10		10	C	BB			PC70
61	VT213L	50m	735n	100	16	16k	2.0		C	1	10M	5.0	2.0		C	BB			PC1 Ø
62	VT302	125m	565n	300	16	16k	2.0		C	1	5.0M	5.0	2.0		C	BA			PC2 Ø
63	VT502	500m	565n	300	16	16k	2.0		C	1	50M	5.0	2.0		C	BA			PC1a Ø
64	NSL396(1)	500m	710n	250	66	17k	1.0		E	1	20M	15	50			BB			PC39
65	NSL496(1)	500m	550n	320	67	17k	1.0		E	1	4.0M	15	50			BA			PC39
66	NSL3960	500m	720n	320	66	17k	1.0		C	1	20M	15	50		C	BB	Hermetic		PC39
67	NSL3961	200m	720n	320	66	17k	1.0	10	C	1	5.0M	15	50	500	C	BB	Plastic		PC39c Ø
68	NSL3962	200m	720n	320	66	17k	1.0	10	C	1	5.0M	15	50	500	C	BB	Plastic		PC40 Ø
69	NSL3963	200m	720n	320	66	17k	1.0		C	1	5.0M	15	50		C	BB	Plastic		PC60b
70	NSL4960	500m	560n	320	67	17k	1.0		C	1	4.0M	15	50		C	BA	Hermetic		PC39
71	NSL4961	200m	560n	320	67	17k	1.0	10	C	1	1.0M	15	50	500	C	BA	Plastic		None
72	NSL4962	200m	560n	320	67	17k	1.0	10	C	1	1.0M	15	50	500	C	BA	Plastic		PC40 Ø
73	NSL4963	200m	560n	320	67	17k	1.0		C	1	1.0M	15	50		C	BA	Plastic		PC60b
74	CL704/2	125m		300		17k	2.0			1	6.8M	5.0	2.0			BB			None
75	VT702E	250m	565n	300	16	17k	2.0		C	1	1.0M	5.0	2.0		C	BA			PC5 Ø
76	NSL382	200m	700n	80	66	18k	1.0	10	E	1	100M	15	50	500		BB			PC42 Ø
77	NSL482	200m	550n	120	67	18k	1.0	10	E	1	15M	15	50	500		BA			PC42 Ø
78	VT373		725n	150		18k	2.0		C	1	20M	5.0				DA			None
79	VT522	500m	515n	300	16	18k	2.0		C	1	5.0M	5.0	2.0		C	BA			PC1a Ø
80	VT433	600m	550n	350		18k	2.0		B	1	10M	5.0				BA			None
81	MPY76C59	100m	560n	200	37	20kØ		10	C	1	20M	10		100	C	BA			PC76
82	MPY76C569	100m	560n	200	37	20kØ		10	C	1	20M	10		100	C	BA			PC76
83	MPY20C59	500m	560n	1.0k	37	20kØ		10	C	1	2.0M	10		100	C	BA			PC80
84	MPY7C59	150m	520n	150		20kØ	1.0		C	1	20M	10	40			BA			PC14 Ø
85	MPY7H59	200m	520n	150		20kØ	1.0		C	1	20M	10	40			BB			PC14 Ø
86	MPB2-4H59	60m	590n	200		20kØ	1.0		C	1	10M	10	40			BB			PC14 Ø
87	MPB2-5H59	120m	590n	200		20kØ	1.0		C	1	10M	10	40			BB			PC14 Ø
88	MPY12H59	500m	520n	300		20kØ	1.0		C	1	10M	10	40			BA			PC14 Ø
89	NORP11	250m	550n	320	67	20k	1.0	10	E	1	2.5M	15	50	500	E	BA			PC60a
90	MPY25R59	750m	520n	500		20kØ	1.0		C	1	10M	10	40			BA			PC14 Ø
91	CK1223	75m	515n	100		20k	2.0		C	1	10M	5.0	2.0		C	BA			PC45 Ø
92	CK1263	100m	515n	100		20k	2.0		C	1	1.0M	5.0	2.0		C	BA			PC46 Ø
93	VT222H	50m	515n	100	16	20k	2.0		C	1	1.0M	5.0	2.0		C	BA			PC1 Ø
94	CK1206	150m	715n	200		20k	2.0		C	1	100M	5.0	2.0		C	BB			PC45 Ø
95	VT231	50m	550n	100	16	22k	2.0		C	1	1.0M	5.0	2.0		C	BA			PC1 Ø
96	VT931	80m	550n	100	16	22k	2.0		C	1	1.0M	5.0	2.0		C	BA			PC3 Ø
97	VT203	50m	565n	300	16	22k	2.0		C	1	5.0M	5.0	2.0		C	BA			PC1 Ø
98	VT213	50m	735n	300	16	22k	2.0		C	1	50M	5.0	2.0		C	BB			PC1 Ø
99	VT312	125m	735n	300	16	22k	2.0		C	1	50M	5.0	2.0		C	BB			PC2 Ø
100	P930	50m	560n	150	37	23k		10		1	500k	10		10	C	BB			PC65
101	P930-05	50m	560n	150	37	23k		10		1	500k	10		10	C	BB			PC68a
102	P930-06	50m	560n	150	37	23k		10		1	500k	10		10	C	BB			PC68a
103	P467	100m	520n	100	36	24k		10		1	5.0k	10		10	C	BB			PC65a
104	CL9P7HL	50m	620n	100	27	24k	2.0		C	1	16M	5.0	2.0		C	BA			PC55a Ø
105	CL907HL	50m	620n	100 Δ	57	24k	2.0		C	1	16M	5.0	2.0		C	BA			PC10 Ø
106	VT712E	250m	735n	300	16	24k	2.0		C	1	20M	5.0	2.0		C	BB			PC5 Ø
107	P1023	70m	560n	100	36	25k		10		1	400k	10		10	C	BB			PC68b
108	VT533	500m	550n	200	16	25k	2.0		C	1	10M	5.0	2.0		C	BA			PC1a Ø
109	NSL445(1)	1.0	550n	1.0k	67	26k	1.0		E	1	15M	15	50			BA			PC15b
110	NSL362	100m	700n	70	66	28k	1.0	10	E	1	200M	15	50	500		BB			PC39b Ø

SYMBOLS AND CODES EXPLAINED IN INTERPRETER

16. LIGHT DEPENDENT RESISTORS (LDRs) - (Cont'd)

IN ORDER OF: (1) TYPE (2) No. ELEMENTS (3) Ron (4) Ev TEST (5) V MAX & (6) TYPE No

LINE No.	6 TYPE NUMBER	PD RATED MAX (W)	PEAK WAVE-LENGTH λp (m)	5 VOLT MAX (V)	TEMP RNG. CODE - +	3 LIGHT RESISTANCE TEST CONDITIONS Ron (Ω)	Ev 4 (fc)	Ev (lx)	SRC	2 No. ELE-MNTS	DARK RESISTANCE Roff (Ω)	SECs. AFTER (s)	Ev TEST (fc)	Ev TEST (lx)	SRC	MAT	FEATURES	LEAD CODE	DRAWING
1	NSL462	100m	550n	80	67	28k	1.0	10	E	1	20M	15	50	500		BA			PC39b Ø
2	CL7P5HL	125m	550n	170 Δ	27	28k	2.0		C	1	14M	5.0	2.0		C	BA			PC55c
3	CL7P9L	125m	550n	170	27	28k	2.0		C	1	18M	5.0	2.0		C	BA			PC55c
4	VT333	125m	550n	200	16	28k	2.0		C	1	10M	5.0	2.0			BA			PC2 Ø
5	VT343	125m	675n	300	16	28k	2.0		C	1	10M	5.0	2.0			BB			PC2 Ø
6	P1082-06	50m	540n	100	36	30k		10		1	500k	10		10	C	BB			PC55d
7	ORP69	100m		350	47	30k		50	G	1	100M	20			G	BA			PC17a Ø
8	NSL313	50m	700n	70	66	30k	1.0	10	E	1	100M	15	50	500		BB			PC39a Ø
9	NSL3132	50m	700n	70		30k	1.0	10		1	10M	15	50	500		BB			PC41 Ø
10	NSL413	50m	550n	80	67	30k	1.0	10	E	1	2.0M	15	50	500		BA			PC39a Ø
11	NSL4132	50m	550n	80		30k	1.0	10		1	200k	15	50	500		BA			PC41 Ø
12	NSL2129/6	200m	270n	320	67	30k	1.0		B	1	1.0M	15	50			BA			PC60
13	CK1247	150m	715n	200		30k	2.0		C	1	100M	5.0	2.0		C	BB			PC46 Ø
14	CL904	50m	690n	250 Δ	57	30k	2.0		C	1	8.0M	5.0	2.0		C	BB			PC10 Ø
15	CL604	75m	690n	300 Δ	57	30k	2.0		C	1	8.0M	5.0	2.0		C	BB			PC8 Ø
16	VT242H	50m	675n	300	16	30k	2.0			1	10M	5.0	2.0		C	BB			PC1 Ø
17	VT312H	125m	735n	300	16	30k	2.0		C	1	50M	5.0	2.0		C	BB			PC2 Ø
18	CL7P7HM	125m	620n	400	27	30k	2.0		C	1	20M	5.0	2.0		C	BA			PC55c
19	VT322	125m	515n	300	16	31k	2.0		C	1	10M	5.0	2.0		C	BA			PC2 Ø
20	VT913H	80m	735n	100	16	32k	2.0		C	1	50M	5.0	2.0		C	BB			PC3 Ø
21	VT213H	50m	735n	300	16	32k	2.0		C	1	50M	5.0	2.0		C	BB			PC1 Ø
22	VT303L	125m	565n	300	16	32k	2.0		C	1	10M	5.0	2.0		C	BA			PC2 Ø
23	VT503L	500m	565n	300	16	32k	2.0		C	1	10M	5.0	2.0		C	BA			PC1a Ø
24	VT434	600m	550n	350		32k	2.0		B	1	10M	5.0				BA			None
25	VT833	175m	550n	300	16	33k	2.0		C	1	15M	5.0	2.0		C	BA			PC3a Ø
26	P380-5R	30m	620n	100	36	36k		10		1	20M	10		10	C	BB			PC55d
27	P1095-06	50m	540n	100	36	36k		10		1	1.0M	10		10	C	BB			PC55d
28	P722-10R	300m	560n	300	36	36k		10		1	500k	10		10	C	BB			PC55f
29	VT523L	500m	515n	300	16	36k	2.0		C	1	10M	5.0	2.0		C	BA			PC1a Ø
30	NSL395(1)	500m	710n	250	66	40k	1.0		E	1	20M	15	50			BB			PC39
31	NSL495(1)	500m	550n	320	67	40k	1.0		E	1	32M	15	50			BA			PC39
32	NSL3950	500m	720n	320	66	40k	1.0		C	1	20M	15	50		C	BB	Hermetic		PC39
33	NSL3951	200m	720n	320	66	40k	1.0	10	C	1	5.0M	15	50	500	C	BB	Plastic		PC39c Ø
34	NSL3952	200m	720n	320	66	40k	1.0	10	C	1	5.0M	15	50	500	C	BB	Plastic		PC40 Ø
35	NSL3953	200m	720n	320	66	40k	1.0		C	1	5.0M	15	50		C	BB	Plastic		PC60b
36	NSL4950	500m	560n	320	67	40k	1.0		C	1	30M	15	50		C	BA	Hermetic		PC39
37	NSL4951	200m	560n	320	67	40k	1.0	10	C	1	4.0M	15	50	500	C	BA	Plastic		None
38	NSL4952	200m	560n	320	67	40k	1.0	10	C	1	4.0M	15	50	500	C	BA	Plastic		PC40 Ø
39	NSL4953	200m	560n	320	67	40k	1.0		C	1	4.0M	15	50		C	BA	Plastic		PC60b
40	VT223	50m	515n	300	16	40k	2.0		C	1	5.0M	5.0	2.0		C	BA			PC1 Ø
41	NSL381	200m	700n	80	66	43k	1.0	10	E	1	100M	15	50	500		BB			PC42 Ø
42	NSL481	200m	550n	120	67	43k	1.0	10	E	1	65M	15	50	500		BA			PC42 Ø
43	VT901	80m	565n	100	16	43k	2.0		C	1	500k	5.0	2.0		C	BA			PC3 Ø
44	VT203H	50m	565n	300	16	44k	2.0		C	1	5.0M	5.0	2.0		C	BA			PC1 Ø
45	VT903H	80m	565n	300	16	44k	2.0		C	1	5.0M	5.0	2.0		C	BA			PC3 Ø
46	P401	30m	570n	100	35	45k		10		1	10M	10		10	C	BB			PC69
47	ORP62	100m		350	47	45k		50	G	1	150M	20			G	BA			PC17 Ø
48	ORP68	100m		350	47	46k		50	G	1	150M	20			G	BA			PC17a Ø
49	MPY54C69	60m	560n	200	37	50kØ		10	C	1	20M	10		100	C	BA			PC76a
50	MPY54C679	60m	560n	200	37	50kØ		10	C	1	20M	10		100	C	BA			PC76a
51	NSL318	50m	700n	120	66	50k	1.0	10	E	1	500M	15	50	500		BB			PC39a Ø
52	NSL3182	50m	700n	120		50k	1.0	10		1	50M	15	50	500		BB			PC41 Ø
53	MPY7C59E	150m	520n	150		50k	1.0		C	1	5.0M	10	40			BA			PC14 Ø
54	MPY7C69	150m	520n	150		50kØ	1.0		C	1	30M	10	40			BA			PC14 Ø
55	MPY7H69	200m	520n	150		50kØ	1.0		C	1	30M	10	40			BA			PC14 Ø
56	NSL418	50m	550n	160	67	50k	1.0	10	E	1	5.0M	15	50	500		BA			PC39a Ø
57	NSL4182	50m	550n	160		50k	1.0	10		1	1.0M	15	50	500		BA			PC41 Ø
58	MPY4H69	60m	520n	200		50kØ	1.0		C	1	10M	10	40			BA			PC14 Ø
59	MPY5C69	100m	520n	200		50kØ	1.0		C	1	30M	10	40			BA			PC14 Ø
60	MPY5H69	120m	520n	200		50kØ	1.0		C	1	30M	10	40			BA			PC14 Ø
61	MKB5H69	75m	700n	300		50kØ	1.0		C	1	400M	10	40			BB			PC14 Ø
62	MKB7H69	150m	700n	300		50kØ	1.0		C	1	400M	10	40			BA			PC14 Ø
63	CL7P4	125m	690n	300 Δ	27	54k	2.0		C	1	14M	5.0	2.0		C	BB			PC55c
64	ORP66	70m		350	47	55k		50	G	1	200M	20			G	BA			PC17 Ø
65	CL5M2	500m	515n	250 Δ	57	55k	2.0		C	1	3.6M	5.0	2.0		C	BA			PC11 Ø
66	P201D	100m	520n	200	36	60k		10		1	10M	10		10	C	BB			PC65a
67	ORP60	70m		350	47	60k		50	G	1	200M	20			G	BA			PC17 Ø
68	ORP61	70m		350	47	60k		50	G	1	200M	20			G	BA			PC17 Ø
69	VT313L	125m	735n	300	16	60k	2.0		C	1	100M	5.0	2.0		C	BB			PC2 Ø
70	VT435	600m	550n	350		60k	2.0		B	1	10M	5.0				BA			None
71	VT914L	80m	735n	100	16	64k	2.0		C	1	100M	5.0	2.0		C	BB			PC3 Ø
72	VT214L	50m	735n	300	16	64k	2.0		C	1	100M	5.0	2.0		C	BB			PC1 Ø
73	NSL361	100m	700n	70	66	65k	1.0	10	E	1	200M	15	50	500		BB			PC39b Ø
74	NSL461	100m	550n	80	67	65k	1.0	10	E	1	80M	15	50	500		BA			PC39b Ø
75	NSL487	200m	550n	250	67	65k	1.0	10	E	1	20M	15	50	500		BA			PC42 Ø
76	VT223H	50m	515n	300	16	65k	2.0		C	1	5.0M	5.0	2.0		C	BA			PC1 Ø
77	NSL387	200m	700n	250	66	66k	1.0	10	E	1	1.0G	15	50	500		BB			PC42 Ø
78	CL903N	50m	735n	100 Δ	57	66k	2.0		C	1	440M	5.0	2.0		C	BB			PC10 Ø
79	CL907N	50m	615n	100 Δ	57	66k	2.0		C	1	13M	5.0	2.0		C	BA			PC10 Ø
80	VT503	500m	565n	300	16	66k	2.0		C	1	50M	5.0	2.0		C	BA			PC1a Ø
81	VT703	250m	565n	300	07	66k	2.0		C	1	20M	5.0	2.0		C	BA	CERAMIC		PC3b
82	P201D7R	100m	520n	200	36	67k		10		1	20M	10		10	C	BB			PC55e
83	CL902L	50m	515n	100 Δ	57	67k	2.0		C	1	4.5M	5.0	2.0		C	BA			PC10 Ø
84	CL903A	50m	735n	250 Δ	57	67k	2.0		C	1	450M	5.0	2.0		C	BB			PC10 Ø
85	VT303	125m	565n	300	16	70k	2.0		C	1	10M	5.0	2.0		C	BA			PC2 Ø
86	NSL312	50m	700n	70	66	75k	1.0	10	E	1	100M	15	50	500		BB			PC39a Ø
87	NSL3122	50m	700n	70		75k	1.0	10		1	10M	15	50	500		BB			PC41 Ø
88	NSL412	50m	550n	80	67	75k	1.0	10	E	1	10M	15	50	500		BA			PC39a Ø
89	NSL4122	50m	550n	80		75k	1.0	10		1	1.0M	15	50	500		BA			PC41 Ø
90	CL603A	75m	735n	300 Δ	57	75k	2.0		C	1	500M	5.0	2.0		C	BB			PC8 Ø
91	CK1268	125m	515n	200	37	80k	2.0		C	1	10M	10	2.0		C	BA			PC46 Ø
92	VT224L	50m	515n	300	16	80k	2.0		C	1	10M	5.0	2.0		C	BA			PC1 Ø
93	CL905N	50m	550n	100 Δ	57	83k	2.0		C	1	5.5M	5.0	2.0		C	BA			PC10 Ø
94	VT204L	50m	565n	300	16	88k	2.0		C	1	10M	5.0	2.0		C	BA			PC1 Ø
95	VT904L	80m	565n	300	16	88k	2.0		C	1	10M	5.0	2.0		C	BA			PC3 Ø
96	P1201(2)	70m	540n	100	36	90k		10		1	5.0M	10		10	C	BB			PC55d
97	P1201-01	70m	540n	100	36	90k		10		1	5.0M	10		10	C	BB			PC55d
98	MPY43C79	30m	560n	100	37	100kØ		10	C	1	20M	10		100	C	BA			PC74
99	P320	50m	520n	200	35	100k		10		1	20M	10		10	C	BB			PC65
100	MPY7C79	150m	520n	150		100kØ	1.0		C	1	50M	10	40			BA			PC14 Ø
101	MPY7H79	200m	520n	150		100kØ	1.0		C	1	50M	10	40			BA			PC14 Ø
102	MPY4H79	60m	520n	200		100kØ	1.0		C	1	20M	10	40			BA			PC14 Ø
103	MPY5C79	100m	520n	200		100kØ	1.0		C	1	50M	10	40			BA			PC14 Ø
104	MPY5H79	120m	520n	200		100kØ	1.0		C	1	50M	10	40			BA			PC14 Ø
105	NSL367	100m	700n	250	66	100k	1.0	10	E	1	1.0G	15	50	500		BB			PC39b Ø
106	NSL467	100m	550n	250	67	100k	1.0	10	E	1	4.0k	15	50	500		BA			PC39b Ø
107	VT471L		725n	50		100k	2.0		C	1	.10M	5.0				DA			None
108	VT571L		725n	50		100k	2.0		C	1	.10M	5.0				DA			None
109	CL9P5HL	50m	550n	100	27	100k	2.0		C	1	67M	5.0	2.0		C	BA			PC55a Ø
110	CL9P9L	50m	550n	100	27	100k	2.0		C	1	67M	5.0	2.0		C	BA			PC55a Ø

SYMBOLS AND CODES EXPLAINED IN INTERPRETER

16. LIGHT DEPENDENT RESISTORS (LDRs) - (Cont'd)

IN ORDER OF: (1) TYPE (2) No. ELEMENTS (3) Ron (4) Ev TEST (5) V MAX & (6) TYPE No

LINE No.	6 TYPE NUMBER	PD RATED MAX (W)	PEAK WAVE-LENGTH λp (m)	5 VOLT MAX (V)	TEMP RNG. CODE - +	3 LIGHT RESISTANCE TEST CONDITIONS Ron (Ω)	Ev 4 (fc)	Ev (lx)	SRC	2 No. ELE-MNTS	DARK RESISTANCE Roff (Ω)	SECs. AFTER (s)	Ev TEST (fc)	Ev TEST (lx)	SRC	MAT	FEATURES	LEAD CODE	DRAWING
1	CL905HL	50m	550n	100 Δ	57	100k	2.0		C	1	67M	5.0	2.0		C	BA			PC10 Ø
2	CL909L	50m	550n	100 Δ	57	100k	2.0		C	1	67M	5.0	2.0		C	BA			PC10 Ø
3	VT232	50m	550n	100	16	100k	2.0		C	1	50M	5.0	2.0		C	BA			PC1 Ø
4	VT932	80m	550n	100	16	100k	2.0		C	1	50M	5.0	2.0		C	BA			PC3 Ø
5	CK1207	150m	715n	200		100k	2.0		C	1	1.0G	5.0	2.0		C	BB			PC45 Ø
6	CK1227	150m	615n	200	36	100k	2.0		C	1	50M	5.0	2.0		C	CF			PC45 Ø
7	NSL317	50m	700n	250	66	110k	1.0	10	E	1	1.0G	15	50	500		BB			PC39a Ø
8	NSL3172	50m	700n	250		110k	1.0	10		1	100M	15	50	500		BB			PC41 Ø
9	NSL417	50m	550n	320	67	110k	1.0	10	E	1	50M	15	50	500		BA			PC39a Ø
10	NSL4172	50m	550n	320		110k	1.0	10		1	5.0M	15	50	500		BA			PC41 Ø
11	VT204	50m	565n	300	16	110k	2.0		C	1	20M	5.0	2.0		C	BA			PC1 Ø
12	VT904	80m	565n	300	16	110k	2.0		C	1	20M	5.0	2.0		C	BA			PC3 Ø
13	VT436	600m	550n	350		110k	2.0		B	1	10M	5.0				BA			None
14	P587	50m	560n	200	36	130k		10		1	5.0M	10		10	C	BB			PC67
15	CK1228	150m	515n	200	37	130k	2.0		C	1	50M	10	2.0		C	BA			PC45 Ø
16	CL903	50m	735n	250 Δ	57	133k	2.0		C	1	880M	5.0	2.0		C	BB			PC10 Ø
17	CL907	50m	615n	250 Δ	57	133k	2.0		C	1	27M	5.0	2.0		C	BA			PC10 Ø
18	CL603	75m	735n	300 Δ	57	133k	2.0		C	1	880M	5.0	2.0		C	BB			PC8 Ø
19	CL607	75m	615n	300 Δ	57	133k	2.0		C	1	27M	5.0	2.0		C	BA			PC8 Ø
20	VT704	250m	565n	300	07	136k	2.0		C	1	50M	5.0	2.0		C	BA	CERAMIC		PC3b
21	P201D5R	50m	520n	100	36	140k		10		1	20M	10		10	C	BB			PC55d
22	VT914	80m	735n	250	16	140k	2.0		C	1	200M	5.0	2.0		C	BB			PC3 Ø
23	VT214	50m	735n	300	16	140k	2.0		C	1	200M	5.0	2.0		C	BB			PC1 Ø
24	VT314	125m	735n	300	16	140k	2.0		C	1	200M	5.0	2.0		C	BB			PC2 Ø
25	VT804	175m	565n	300	16	140k	2.0		C	1	50M	5.0	2.0		C	BA			PC3a Ø
26	NSL4472	500m	530n	1.0k	67	140k	100	10	C	1	200k	15	50	500	C	BA	Plastic		PC40b
27	VT304	125m	565n	300	16	144k	2.0		C	1	50M	5.0	2.0		C	BA			PC2 Ø
28	P1195	100m	550n	200	37	150k		10		1	20M	10		10	C	BB			PC55e
29	VT233L	50m	550n	100	16	150k	2.0		C	1	50M	5.0	2.0		C	BA			PC1 Ø
30	NSL386	200m	700n	250	66	155k	1.0	10	E	1	1.0G	15	50	500		BB			PC42 Ø
31	NSL486	200m	550n	250	67	155k	1.0	10	E	1	130M	15	50	500		BA			PC42 Ø
32	CL9P5	50m	550n	250	27	166k	2.0		C	1	11M	5.0	2.0		C	BA			PC55a Ø
33	CL905	50m	550n	250 Δ	57	166k	2.0		C	1	11M	5.0	2.0		C	BA			PC10 Ø
34	CL7P5	125m	550m	300 Δ	27	166k	2.0		C	1	8.3M	5.0	2.0		C	BA			PC55c
35	CL605	75m	550n	300 Δ	57	166k	2.0		C	1	11M	5.0	2.0		C	BA			PC8 Ø
36	MPY5C89	100m	520n	200		200kØ	1.0		C	1	60M	10	40			BA			PC14 Ø
37	MPY5H89	120m	520n	200		200kØ	1.0		C	1	60M	10	40			BA			PC14 Ø
38	NSL4462	500m	530n	1.0k	67	200k	100	10	C	1	500k	15	50	500	C	BA	Plastic		PC40b
39	NSL366	100m	700n	250	66	230k	1.0	10	E	1	1.0G	15	50	500		BB			PC39b Ø
40	NSL466	100m	550n	250	67	230k	1.0	10	E	1	20k	15	50	500		BA			PC39b Ø
41	NSL316	50m	700n	250	66	260k	1.0	10	E	1	1.0G	15	50	500		BB			PC39a Ø
42	NSL3162	50m	700n	250		260k	1.0	10		1	100M	15	50	500		BB			PC41 Ø
43	NSL416	50m	550n	320	67	260k	1.0	10	E	1	100M	15	50	500		BA			PC39a Ø
44	NSL4162	50m	550n	320		260k	1.0	10		1	10M	15	50	500		BA			PC41 Ø
45	CL907HN	50m	620n	100 Δ	57	300k	2.0		C	1	200M	5.0	2.0		C	BA			PC10 Ø
46	VT571		725n	150		300k	2.0		C	1	.30M	5.0				DA			None
47	NSL385	200m	700n	250	66	330k	1.0	10	E	1	1.0G	15	50	500		BB			PC42 Ø
48	NSL485	200m	550n	250	67	330k	1.0	10	E	1	200M	15	50	500		BA			PC42 Ø
49	VT835	175m	550n	300	16	330k	2.0		C	1	100M	5.0	2.0		C	BA			PC3a Ø
50	VT233	50m	550n	100	16	350k	2.0		C	1	100M	5.0	2.0		C	BA			PC1 Ø
51	VT771L		725n	50		500k	2.0		C	1	.50M	5.0				DA			None
52	VT224	50m	515n	300	16	500k	2.0		C	1	50M	5.0	2.0		C	BA			PC1 Ø
53	P586	50m	520n	300	36	520k		10		1	10M	10		10	C	BB			PC67
54	NSL315	50m	700n	250	66	550k	1.0	10	E	1	1.0G	15	50	500		BB			PC39a Ø
55	NSL365	100m	700n	250	66	550k	1.0	10	E	1	1.0G	15	50	500		BB			PC39b Ø
56	NSL465	100m	550n	250	67	550k	1.0	10	E	1	160k	15	50	500		BA			PC39b Ø
57	NSL3152	50m	700n	250		550k	1.0	10		1	500M	15	50	500		BB			PC41 Ø
58	NSL415	50m	550n	320	67	550k	1.0	10	E	1	100M	15	50	500		BA			PC39a Ø
59	NSL4152	50m	550n	320		550k	1.0	10		1	10M	15	50	500		BA			PC41 Ø
60	NSL4452	500m	530n	1.0k	67	550k	100	10	C	1	1.5M	15	50	500	C	BA	Plastic		PC40b
61	CL905HN	50m	550n	100 Δ	57	700k	2.0		C	1	467M	5.0	2.0		C	BA			PC10 Ø
62	VT234	50m	550n	100	16	700k	2.0			1	200M	5.0	2.0		C	BA			PC1 Ø
63	CK1260	125m	735n	200	46	700k	3.0		C	1	100M	1.0			C	BB			TO-5
64	VT971L		725n	50		1.0M	2.0		C	1	1.0M	5.0				DA			None
65	CL902	50m	515n	250 Δ	57	1.0M	2.0		C	1	66M	5.0	2.0		C	BA			PC10 Ø
66	CL602	75m	515n	300 Δ	57	1.0M	2.0		C	1	66M	5.0	2.0		C	BA			PC8 Ø
67	VT205	50m	565n	300	16	1.0M	2.0		C	1	200M	5.0	2.0		C	BA			PC1 Ø
68	VT225	50m	515n	300	16	1.0M	2.0		C	1	200M	5.0	2.0		C	BA			PC1 Ø
69	VT305	125m	565n	300	16	1.0M	2.0		C	1	200M	5.0	2.0		C	BA			PC2 Ø
70	VT325	125m	515n	300	16	1.0M	2.0		C	1	200M	5.0	2.0			BA			PC2 Ø
71	VT235	50m	550n	300	16	1.4M	2.0			1	200M	5.0	2.0		C	BA			PC1 Ø
72	VT971		725n	100		2.5M	2.0		C	1	2.5M	5.0				DA			None
73	VT372		725n	200		10M	2.0		C	1	10M	5.0				DA			None
74	VT771H		725n	200		10M	2.0		C	1	10M	5.0				DA			None
75	VT274		725n	100		20M	2.0		C	1	20M	5.0				DA			None
76	VT373H		725n	250		50M	2.0		C	1	50M	5.0				DA			None
77	CL704L	125m	690n	100 Δ	57	600	2.0		C	2	160k	5.0	2.0		C	BB			PC9 Ø
78	CK1279	250m	515n	125	36	1.2k	100		E	2	1.0M	5.0	100				Dual		PC47a Ø
79	CL704L2	125m	690n	100 Δ	57	1.5k	2.0		C	2	400k	5.0	2.0		C	BB	Dual		PC9 Ø
80	CK1273	250m	715n	125	36	1.5k	2.0		E	2	10M	5.0	2.0			XX	Dual		PC47 Ø
81	CK1280	150m	715n	125	06	1.5k	2.0		E	2	10M	5.0	2.0				Dual		PC48a Ø
82	CK1276	250m	715n	125	37	1.8k	2.0		E	2	10M	5.0	2.0				Dual		PC47 Ø
83	MKB7H28P	40m	680n	150	37	2.0kØ		10	C	2	1.5M	10		100	C	BA	Dual		PC82
84	VT841/2	175m	675n	75	16	2.4k	2.0		C	2	550k	5.0	2.0		C	BB	Dual		PC4 Ø
85	VT811/2	175m	735n	100	16	2.4k	2.0		C	2	1.0M	5.0	2.0		C	BB	Dual		PC4 Ø
86	CL703L	125m	735n	100 Δ	57	2.7k	2.0		C	2	18M	5.0	2.0		C	BB			PC9 Ø
87	CL707L	125m	615n	100 Δ	57	2.7k	2.0		C	2	540k	5.0	2.0		C	BA			PC9 Ø
88	VT341/2	125m	675n	200	16	3.0k	2.0		C	2	100k	5.0	2.0		C	BB	Tol. 33.5%		None
89	CL705L	125m	550n	100 Δ	57	3.3k	2.0		C	2	220k	5.0	2.0		C	BA			PC9 Ø
90	CK1281	150m	655n	125	06	4.5k	2.0		E	2	10M	5.0	2.0				Dual		PC48a Ø
91	MPY12C38P	50m	560n	150	37	5.0kØ		10	C	2	500M	10		100	C	BA	Dual		PC79
92	MPY12C38	125m	560n	200	37	5.0kØ		10	C	2	2.0M	10		100	C	BA			PC79
93	VT312/2	125m	735n	200	16	5.0k	2.0		C	2	1.0M	5.0	2.0		C	BB	Tol. 33.5%		None
94	CK1275	250m	515n	125		6.0k	2.0		C	2	1.0M	5.0	2.0		C		Dual		PC47 Ø
95	CL703L2	125m	735n	100 Δ	57	6.5k	2.0		C	2	43M	5.0	2.0		C	BB	Dual		PC9 Ø
96	CK1274	250m	655n	125	36	6.5k	2.0		E	2	10M	5.0	2.0			XX	Dual		PC47 Ø
97	CL705L2	125m	550n	100 Δ	57	7.5k	2.0		C	2	500k	5.0	2.0		C	BA	Dual		PC9 Ø
98	CK1277	250m	655n	125	36	7.5k	2.0		E	2	10M	5.0	2.0				Dual		PC47a Ø
99	VT301/2	125m	565n	200	16	7.5k	2.0		C	2	1.0M	5.0	2.0		C	BA	Tol. 33.5%		None
100	VT871/2	175m	615n	100	16	8.8k	2.0		C	2	1.0M	5.0	2.0		C	BA	Dual		PC4 Ø
101	CK1282	150m	615n	125	07	9.0k	2.0		E	2	1.0M	5.0	2.0				Dual		PC48a Ø
102	MPB2-12C49	150m	600n	200	37	10kØ		10	C	2	5.0M	10		100	C	BA			PC79
103	CL707HL	125m	620n	100 Δ	57	10k	2.0		C	2	67M	5.0	2.0		C	BA			PC9 Ø
104	CK1278	250m	515n	125	36	12k	2.0		E	2	1.0M	5.0	2.0				Dual		PC47a Ø
105	CK1283	150m	515n	125	07	15k	2.0		E	2	1.0M	5.0	2.0				Dual		PC48a Ø
106	VT302/2	125m	565n	200	16	16k	2.0		C	2	5.0M	5.0	2.0		C	BA	Tol. 33.5%		None
107	MPB2-76C59F	40m	600n	150	37	20kØ		10	C	2	3.0M	10		100	C	BA	Dual		PC78
108	MPB2-76C59P	40m	600n	150	37	20kØ		10	C	2	5.0M	10		100	C	BA			PC77
109	CL702L	125m	515n	100 Δ	57	20k	2.0		C	2	1.3M	5.0	2.0		C	BA			PC9 Ø
110	CL7P5H-ID	125m	550n	100	27	24k	2.0		C	2	14M	5.0	2.0		C	BA	Dual		PC4a

SYMBOLS AND CODES EXPLAINED IN INTERPRETER

16. LIGHT DEPENDENT RESISTORS (LDRs) - (Cont'd)

IN ORDER OF: (1) TYPE (2) No. ELEMENTS (3) Ron (4) Ev TEST (5) V MAX & (6) TYPE No

LINE No.	6 TYPE NUMBER	PD RATED MAX (W)	PEAK WAVE-LENGTH λp (m)	5 VOLT MAX (V)	TEMP RNG. CODE - +	3 LIGHT RESISTANCE TEST CONDITIONS Ron (Ω)	Ev 4 (fc)	Ev (lx)	SRC	2 No. ELE-MNTS	DARK RESISTANCE Roff (Ω)	SECs. AFTER (s)	Ev TEST (fc)	Ev TEST (lx)	SRC	MAT	FEATURES	LEAD CODE	DRAWING
1	CK1284	150m	715n	125	06	25k	2.0		E	2	100M	5.0	2.0				Dual		PC48a Ø
2	CL705HL	125m	550n	100 Δ	57	28k	2.0		C	2	18M	5.0	2.0		C	BA			PC9 Ø
3	CL709L	125m	550n	100 Δ	57	28k	2.0		C	2	18M	5.0	2.0		C	BA			PC9 Ø
4	CL703M	125m	735n	250 Δ	57	30k	2.0		C	2	200M	5.0	2.0		C	BB			PC9 Ø
5	CL704	125m	690n	300 Δ	57	30k	2.0		C	2	8.0M	5.0	2.0		C	BB			PC9 Ø
6	P1109	30m	620n	100	36	45k		10		2	10M	10		10	C	BB			PC66
7	CL702L2	125m	515n	100 Δ	57	46k	2.0		C	2	3.0M	5.0	2.0		C	BA	Dual		PC9 Ø
8	MKB76C60P	20m	680n	150	37	50kØ		10	C	2	40M	10		100	C	BA			PC77
9	MPY76C69F	40m	560n	150	37	50kØ		10	C	2	5.0M	10		100	C	BA	Dual		PC78
10	CL703/2	125m	735n	300 Δ	57	50k	2.0		C	2	330M	5.0	2.0		C	BB	;Dual		PC9 Ø
11	VT833/2	175m	550n	200	16	52k	2.0		C	2	10M	5.0	2.0		C	BA	Dual		PC4 Ø
12	VT333/2	125m	550n	200	16	60k	2.0		C	2	25M	5.0	2.0		C	BA	Tol. 33.5%		None
13	CL705HL2	125m	550n	100 Δ	57	67k	2.0		C	2	45M	5.0	2.0		C	BA	Dual		PC9 Ø
14	CL703A	125m	735n	300 Δ	57	67k	2.0		C	2	440M	5.0	2.0		C	BB			PC9 Ø
15	MPY7H79P	60m	560n	150	37	100kØ		10	C	2	10M	10		100	C	BA	Dual		PC82
16	CL707HM	125m	620n	250 Δ	57	100k	2.0		C	2	67M	5.0	2.0		C	BA			PC9 Ø
17	CK1285	200m	715n	150	06	120k	2.0		E	2	100M	5.0	100				Dual		PC48 Ø
18	CL703	125m	735n	300 Δ	57	133k	2.0		C	2	880M	5.0	2.0		C	BB			PC9 Ø
19	CL707	125m	615n	300 Δ	57	133k	2.0		C	2	27M	5.0	2.0		C	BA			PC9 Ø
20	CL705	125m	550n	300 Δ	57	166k	2.0		C	2	11M	5.0	2.0		C	BA			PC9 Ø
21	CL705/2	125m	550n	300 Δ	57	166k	2.0		C	2	11M	5.0	2.0		C	BA	Dual		PC9 Ø
22	CL707H	125m	620n	300 Δ	57	600k	2.0		C	2	335M	5.0	2.0		C	BA			PC9 Ø
23	CL702	125m	515n	300 Δ	57	1.0M	2.0		C	2	66M	5.0	2.0		C	BA			PC9 Ø
24	P883	50m	520n	150	35	750k		10		9	20M	10		10	C	BB			PC71
25	P884	50m	520n	150	35	750k		10		18	20M	10		10	C	BB			PC72
PHOTOBRIDGE																			
29	MB1101		600n	25	26					1							Photo-bridge		PS13 ⊠
30	MB1151		700n	25	25					1							Photo-bridge		PS13 ⊠
PHOTOPOT																			
34	MPC1054	30m	700n	15	26%			100		1							Photo-Pot		PS96 Ø
35	MPC1052		700n	15	26%	2.0k				1							Photo-Pot		PS5b ⊠
36	MPC1053		700n	15	26%	2.0k				1							Photo-Pot		PS5a ⊠
37	MPC1001		600n	25	26	2.0k				1							Photo-Pot		PS5 ⊠
38	MPC1051		700n	25	25	2.0k				1							Photo-Pot		PS5 ⊠

If this is June 1988 or later, it is time to order your next issue of OPTOELECTRONICS.

SYMBOLS AND CODES EXPLAINED IN INTERPRETER

17. PHOTOVOLTAIC CELLS - Infrared Detector

IN ORDER OF: (1) TYPE (2) Voc MIN (3) Isc MAX & (4) TYPE NUMBER

LINE No.	4 TYPE NUMBER	ACTIVE SURFACE	1 TYPE CODE	3 MIN. OUTPUT CURRENT Isc (A)	2 MIN. OUTPUT VOLTAGE Voc (V)	MIN. OUTPUT PWR. Po (W)	TEST CONDITIONS Ev FT.C (fc)	Ev LUX (lx)	Ee (W/cm2)	SOURC	PEAK WAVE LENGTH λp (m)	MAX. REV. VOLT VR (V)	TEMP RNG. CODE - +	POLARITY	MATERIAL & FEATURES MAT	LEAD CODE	DRAWING
INFRARED DETECTOR																	
4	PV1(2)	.85sqmm	ID								633n	5.0	5C		AD Photodet	A §	TO-18
5	PV3	3.3sqmm	ID								633n	5.0	5C		AD Photodet	A §	TO-18
6	PV5	5.1sqmm	ID								633n	5.0			AD Photodet	A §	TO-5
7	PV20	18sqmm	ID								633n	5.0			AD Photodet	A §	TO-8
8	PV100B	100sqmm	ID								633n	5.0			AD Photodet	B §	PA56
9	PV100P	100sqmm	ID								633n	5.0			AD Photodet	M Ø	PA57
10	RPY93	2.0 x .75mm	ID									9.0 ☑	45		XX	KK	PD42aa
11	B1818-01	1x1mm	ID	1.2							1.55u	10	36		AB	B	TO-5
12	B1818	1x1mm	ID	1.6							1.55u	10	36		AB	B	TO-5
13	B2034	1x1mm	ID	1.6							1.55u	10	36		AB		TO-8
14	B1720-01	1x1mm	ID	6.0							1.55u	10	36		AB	B	TO-18
15	B1918-01	3 dia	ID	10							1.55u	10	36		AB	B	TO-5
16	B1918	3x3mm	ID	12							1.55u	10	36		AB	B	TO-5
17	B1919-01	5 dia	ID	28							1.55u	5.0	36		AB	A	TO-8
18	B1919	5x5mm	ID	34							1.55u	5.0	36		AB	A	TO-8
19	MS15(2)	12.7sqmm	ID		28m					E	900n		6F		AD	A	PV43 ☑
20	NSL8932	24 sq mm	ID	100u	300m		50				940n		26		AD	A	PV147 Ø
21	BPX40	3.2m in s q	ID	14u†	330m			1.0k	7.7m	G	800n	18	6C§		AD	A	PV37b △
22	BPX41	9.7m in s q	ID	40u	330m			1.0k	7.7m	G	800n	18	6C§		AD	A	PV37c △
23	BPX42	39.2m in sq	ID	110u	330m			1.0k	7.7m	G	800n	12	6C§		AD	A	PV63 △
24	RPY90A	2.0X.50mm	ID		2.0							10 ☑	24		XX		PV164
25	RPY90B	2.0X.50mm	ID		2.0							10 ☑	24		XX		None
26	RPY90C	2.0X0.5mm	ID		2.0							10 ☑	24		XX		PV164
27	RPY90D	2.0X0.5mm	ID		2.0							10 ☑	24		XX		PV164
28	RPY90E	2.0X.50mm	ID		2.0							10 ☑	24		XX		PV164
29	RPY91A	2.75X1.25mm	ID		4.0							10 ☑	24		XX		PV164
30	RPY91B	2.75X1.25mm	ID		4.0							10 ☑	24		XX		None
31	RPY91C	2.75X1.25mm	ID		4.0							10 ☑	24		XX		PV164
32	RPY91D	2.75X1.25mm	ID		4.0							10 ☑	24		XX		PV164
33	RPY91E	2.75x1.25mm	ID		4.0							10 ☑	24		XX		PV164
34	SD07612-22-011	.105x.043	ID	.27m	5.0										XX	Z	TO-46
35	SD07611-21-011	.105x.043	ID	.30m	5.0										XX	Z	TO-46
36	SD20011-12-041	.200(DIA)	ID	2.0m	5.0										XX	Z	TO-8
LIGHT DETECTOR, GENERAL-PURPOSE																	
40	S243P	.78 sq mm	LD										27		Is 8-14mA		PV204 Ø
41	S1446	4.1mm	LD								950n	5.0	16	P	AD		PV108d
42	SCA8041V	0.81 sq mm	LD								632n	100			AD	Y §	TO-18
43	SCA8101V	5.1 sq mm	LD								632n	50			AD	Y	TO-5
44	SCA8102V	3.23 sq mm	LD								632n	50			AD	AQ§	TO-5
45	UV005V	5 Sq.mm.	LD								625n	5			XX		None †
46	UV50V	50 sq.mm.	LD								625n	5			XX		None †
47	UV100V	100 sq.mm.	LD								625n	5			XX		None †
48	A8	50 sq. mm	LD	3.0u				150		C	570n		16		AC		PV178
49	A2	.045 sq in	LD	12u†			100				600n		28		AC		PV5 Ø
50	A3(1)	.060 sq in	LD	20u†			100				600n		28		AC		PV5a Ø
51	B26X13.5	351 sq. mm	LD	30u				150		C	570n		16		AC		PV179
52	A30(2)	706 sq. mm	LD	50u				150		C	570n		16		AC		PV178a
53	E38X18	684 sq. mm	LD	55u				150		C	570n		16		AC		PV180
54	B37X29	1073 sq. mm	LD	70u				150		C	570n		16		AC		PV180a
55	A45(2)	1589 sq. mm	LD	90u				150		C	570n		16		AC		PV178b
56	B4(1)	.390 sq in	LD	120u†			100				600n		28		AC		PV1k ☑
57	A5	.780 sq in	LD	250u†			100				600n		28		AC		PV5b Ø
58	B5(1)	.780 sq in	LD	250u†			100				600n		28		AC		PV1m ☑
59	B10(2)	1.26 sq in	LD	380u†			100				600n		28		AC		PV1n ☑
60	B17	2.60 sq in	LD	710u†			100				600n		28		AC		PV1p ☑
61	B20	3.30 sq in	LD	900u†			100				600n		28		AC		PV1q ☑
62	A15	2.58 sq in	LD	770 †			100				600n		28		AC		PV5d Ø
63	SBC255	.019 sq in	LD	4.4u	180m		10			C	560n		28		AD	B	PV76 ☑
64	VB100-8	.031 sq in	LD	7u	180m		10		1.0m		400n		5A		AD	G	TO-8
65	SBC102	.078 sq in	LD	15u	180m		10			C	560n		28		AD	A	PV13c
66	ST410-1	.015 sq in	LD	15u	180m				5.0m	C	850n		5A		AD		None
67	ST410-3	.015 sq in	LD	15u	180m				5.0m	c	850n		5A		AD		PV1aa ☑
68	ST555-1	.095 cm sq	LD	15u†	180m		10			C	555n		5A		AD TO5 Pkg		None
69	VB100-2	.016 sq in	LD	15u	180m		10		1.0m		400n		5A		AD		PV4v ☑
70	VB100-5	.016 sq in	LD	15u	180m		10		1.0m		400n		5A		AD	G	TO-5
71	ST410-2	.030 sq in	LD	30u	180m				5.0m	C	850n		5A		AD		PV1ab ☑
72	ST555-3	.100 cm sq	LD	30u†	180m		10			C	555n		5A		AD.09x.2Pkg		None
73	VB100-1	.031 sq in	LD	30u	180m		10		1.0m		400n		5A		AD		PV4u ☑
74	VB100-18	.008 sq in	LD	35u	180m		10		1.0m		400n		5A		AD	G	TO-18
75	ST555-2	.200 cm sq	LD	60u†	180m		10			C	555n		5A		AD .2x.2Pkg		None
76	SBC541	.310 sq in	LD	70u	180m		10			C	560n		16		AD	B	PV75 ☑
77	SBC111	.486 sq in	LD	110u	180m		10			C	560n		16		AD	A	PV13a Ø
78	ST410-4	.139 sq in	LD	120u	180m				5.0m	C	850n		5A		AD		PV1bb ☑
79	VB100-3	.140 sq in	LD	120u	180m		10		1.0m		400n		5A		AD		PV4w ☑
80	ST410-5	.279 sq in	LD	240u	180m				5.0m	C	850n		5A		AD		PV1ba ☑
81	VB100-4	.280 sq in	LD	240u	180m		10		1.0m		400n		5A		AD		PV4x ☑
82	ST555-4	.900 cm sq	LD	250u†	180m		10			C	555n		5A		AD.39x.39Pg		None
83	ST555-5	1.80 cm sq	LD	500u†	180m		10			C	555n		5A		AD.39x.785		None
84	SS400-6	.130x.050 in	LD	200u	200m		1.2k			F			6H		AD	A	PV55 Ø
85	SS400-7	.130x.050 in	LD	200u	200m		1.2k			F	800n		6H		AD	A	PV55 Ø
86	DP2	.088 sq in	LD	24 †	220m†		100				600n		28		AC		PV8 ☑
87	SS400-3	.130x.050 in	LD	20u	250m		1.2k			F			6H		AD	A	PV55 Ø
88	SS400-4	.130x.050 in	LD	20u	250m		1.2k			F			6H		AD	A	PV55 Ø
89	SS400-5	.130x.050 in	LD	250u	250m		1.2k			F			6H		AD	A	PV55 Ø
90	110PBHL	.86 Sq cm	LD	1.4m	250m				10m	F	935n	5.0			AD BLUE		PV148d ☑
91	BPY11P5	4.5mmX2.0m	LD	56u	260m						850n	1.0	5A		Si PVC	A ♦	PV94f
92	BPY11P4	4.5mmx2.0m	LD	63u	260m†						850n	1.0	5A		Si PVC	A ♦	PV94f
93	DP3	.210 sq in	LD	66 †	260m†		100				600n		28		AC		PV7 ☑
94	NSL820	.0072 sq in	LD	130u	275m		500		25m	E	850n	10	6C	N	AD		PV110 Ø
95	NSL810	.005 sq in	LD	150u	275m		500		25m	E	850n	10	6C	N	AD		PT2g Ø
96	NSL881	.014 sq in	LD	300u	275m		500		25m	E	850n	10	6C	N	AD		PV110 Ø
97	NSL801	.0147 sq in	LD	325u	275m		500		25m	E	950n	10	6C	N	AD		PV105 ☑
98	NSL882	.023 sq in	LD	440u	275m		500		25m	E	850n	10	6C	N	AD		PV111 Ø
99	NSL802	.028 sq in	LD	650u	275m		500		25m	E	950n	10	6C	N	AD		PV106 ☑
100	NSL891	.029 sq in	LD	650u	275m		500		25m	E	850n	10	6C	N	AD		PV111a Ø
101	NSL892	.054 sq in	LD	1.2m	275m		500		25m	E	850n	10	6C	N	AD		PV111b Ø
102	NSL808	.062 sq in	LD	1.4m	275m		500		25m	E	950n	10	6C	N	AD		PV105b ☑
103	NSL803	.068 sq in	LD	1.5m	275m		500		25m	E	950n	10	6C	N	AD		PV106a ☑
104	NSL851	.068 sq in	LD	1.5m	275m		500		25m	E	850n	10	6C	N	AD		PV109 Ø
105	NSL806	.138 sq in	LD	3.0m	275m		500		25m	E	950n	10	6C	N	AD		PV107 ☑
106	NSL807	.161 sq in	LD	3.5m	275m		500		25m	E	950n	10	6C	N	AD		PV105a ☑
107	NSL805	.246 sq in	LD	4.7m	275m		500		25m	E	950n	10	6C	N	AD		PV108 ☑
108	BPW21M	.0116 Sq In	LD	5.0u	280m					C	565n	10	6A	P	AD	A §	PC14
109	CSC12(1)	.137 sq in	LD*	25u	280m				200u	F	900n				XX		PV90 Ø
110	BPY64P	6.0mmx6.0m	LD	180u	280m						850n	1.0	5A	P	250nA/lx	A ♦	PV94d ☑

SYMBOLS AND CODES EXPLAINED IN INTERPRETER

17. PHOTOVOLTAIC CELLS - Light Detector, General-Purpose (Cont'd)

IN ORDER OF: (1) TYPE (2) Voc MIN (3) Isc MAX & (4) TYPE NUMBER

LINE No.	4 TYPE NUMBER	ACTIVE SURFACE	1 TYPE CODE	3 MIN. OUTPUT CURRENT Isc (A)	2 MIN. OUTPUT VOLTAGE Voc (V)	MIN. OUTPUT PWR. Po (W)	TEST CONDITIONS Ev FT.C (fc)	Ev LUX (lx)	Ee (W/cm2)	SOURCE	PEAK WAVE LENGTH λp (m)	MAX. REV. VOLT VR (V)	TEMP RNG. CODE - +	POLARITY	MATERIAL & FEATURES MAT	LEAD CODE	DRAWING
1	VTS2077	.013 sq in	LD	5.0u	300m†		10			C	900n		5C	P	AD BES		PV1r ☑
2	VTS3077	.013 sq in	LD	5.0u	300m†		10			C	900n		A	P	AD BES		PV1z ☑
3	VTS2076	.016 sq in	LD	6.0u	300m†		10			C	900n		5C	P	AD BES		PV1s ☑
4	VTS3076	.016 sq in	LD	6.0u	300m†		10			C	900n		A	P	AD BES		PV1aa ☑
5	VTS5076	.016 sq in	LD	6.0u	300m†		10			C	750n			P	AD BES		PV27 Ø
6	VTS5078	.028 sq in	LD	11u	300m†		10			C	750n			P	AD BES		PV27 Ø
7	VTS2075	.032 sq in	LD	13u	300m†		10			C	900n		5C	P	AD BES		PV1t ☑
8	VTS3075	.032 sq in	LD	13u	300m†		10			C	900n		A	P	AD BES		PV1ab ☑
9	VTS4075	.032 sq in	LD	13u	300m†		10			C	750n			P	AD BES		PV174a
10	VTS2074	.065 sq in	LD	26u	300m†		10			C	900n		5C	P	AD BES		PV1u ☑
11	VTS3074	.065 sq in	LD	26u	300m†		10			C	900n		A	P	AD BES		PV1ac ☑
12	VTS6079	.080 sq in	LD	32u	300m†		10			C	750n			P	AD BES		PV28 Ø
13	VTS2073	.130 sq in	LD	52u	300m†		10			C	900n		5C	P	AD BES		PV1v ☑
14	VTS3073	.130 sq in	LD	52u	300m†		10			C	900n		A	P	AD BES		PV1ad ☑
15	VTS2072	.140 sq in	LD	55u	300m†		10			C	900n		5C	P	AD BES		PV1w ☑
16	VTS3072	.140 sq in	LD	55u	300m†		10			C	900n		A	P	AD BES		PV1ae ☑
17	TP60	1.5sq cm	LD	70u	300m		9.2	100	600u	C	850n	1.0	27	P	AD	A	PV99 Ø
18	TP61	1.5sq cm	LD	70u	300m		9.2	100	600u	C	850n	1.0	5A	P	AD	A	PV98 Ø
19	VTS2071	.290 sq in	LD	115u	300m†		10			C	900n		5C	P	AD BES		PV1x ☑
20	VTS3071	.290 sq in	LD	115u	300m†		10			C	900n		A	P	AD BES		PV1af ☑
21	VTS7070A	.366 sq in	LD	145u	300m†		10			C	750n			P	AD BES		PV13
22	VTS2070	.610 sq in	LD	240u	300m†		10			C	900n		5C	P	AD BES		PV1y ☑
23	VTS3070	.610 sq in	LD	240u	300m†		10			C	900n		A	P	AD BES		PV1ag ☑
24	SS400-1	.130x.050 in	LD	300u	300m		1.2k			F			6H		AD	A	PV55 Ø
25	SS400-2	.130x.050 in	LD	300u	300m		1.2k			F			6H		AD	A	PV55 Ø
26	A5M	1.10 in Dia	LD	220 †	300m†		100				600n		28		AC		PV3a Ø
27	B10M	1.60x.700 in	LD	320 †	300m†		100				600n		28		AC		PV2a ☑
28	A10M(2)	1.70 in Dia	LD	550 †	300m†		100				600n		28		AC		PV3b Ø
29	BPX79	4.5x4.5mm	LD	100u†	310m†						800n	1.0	5A	P	Silicon PVC	A ♦	PV95 ☑
30	A15M	1.90 in Dia	LD	700 †	310m†		100				600n		28		AC		PV6 Ø
31	MS601	1.07 sq in	LD	1.0u†	320m†			100	100u	C	560n	7			AD	A	PC14n
32	VTS5086	.016 sq in	LD	65u†	325m†		100			C	900n		5A	P	AD		PC2
33	VTS5088	.028 sq in	LD	120u†	325m†		100			C	900n		5A	P	AD		PC2
34	VTS4085	.032 sq in	LD	140u†	325m†		100			C	900n		5A	P	AD		PC3b
35	VTS6089	.080 sq in	LD	280u†	325m†		100			C	900n		5A	P	AD		PC1a
36	VTS7080A	.370 sq in	LD	1.5m†	325m†		100			C	900n		5A	P	AD		PV13
37	MS600	1.07 sq in.	LD	1.0u†	330m†			100	100u	H	620n				AD	A	PC14m
38	BPW20	.0116 Sq In	LD	20u	330m					C	700n	10	2A	P	AD	A §	PC14
39	SPD541	.310 sq in	LD	1.17u†	350m		100			C	850n		16	P	AD	B	PV75 ☑
40	SPD111	.486 sq in	LD	1.96u†	350m		100			C	850n		16	P	AD	A	PV13a Ø
41	SPD110	.486 sq in	LD	2.04u†	350m		100			C	850n		28	P	AD	B	PV71 Ø
42	NSL781	.014 sq in	LD	28u	350m		500		25m	E	850n	5.0	6C	N	AD		PV110 Ø
43	SPD331	.014sq in	LD	48u	350m			1.0k		B	825n		17		XX		PV124 ☑
44	VTS2087	.013 sq in	LD	55u†	350m†		100			C	900n		5C	P	AD		PV1r ☑
45	VTS3087	.013 sq in	LD	55u†	350m†		100			C	900n		5C	P	AD		PV1z ☑
46	VTS2086	.016 sq in	LD	65u†	350m†		100			C	900n		5C	P	AD		PV1s ☑
47	VTS3086	.016 sq in	LD	65u†	350m†		100			C	900n		5C	P	AD		PV1aa ☑
48	SPD550	.016 sq in	LD	68u†	350m		100			C	850n		28	P	AD	B	PV76 ☑
49	SPD500	.021 sq in	LD	88u†	350m		100			C	850n		28	P	AD	B	PV73d
50	NSL720	.0072 sq in	LD	125u	350m		500		25m	E	850n	5.0	6C	N	AD		PV110 Ø
51	58P	.012 Sq in	LD	130u	350m				10m	F	935n	20			AD		PV148
52	58PB	.012 Sq in	LD	130u	350m				10m	F	935n	20			AD BLUE		PV148 ☑
53	58PBH	.077 sq cm	LD	130u	350m				10m	F	935n	20			AD PLANAR		PV148 ☑
54	58PBHL	.077 Sq cm	LD	130u	350m				10m	F	935n	20			AD BLUE		PV148 ☑
55	58PBL	.012 Sq in	LD	130u	350m				10m	F	935n	20			AD BLUE		PV148 ☑
56	58PL	.012 Sq in	LD	130u	350m				10m	F	935n	20			AD		PV148 ☑
57	SPD511T	.031 sq in	LD	132u†	350m		100			C	850n		16	P	AD	B	PV74 Ø
58	VTS2085	.032 sq in	LD	140u†	350m†		100			C	900n		5C	P	AD		PV1t ☑
59	VTS3085	.032 sq in	LD	140u†	350m†		100			C	900n		5C	P	AD		PV1ab ☑
60	SPD570	.062 sq in	LD	260u†	350m		100			C	850n		28	P	AD	B	PV73c ☑
61	VTS2084	.065 sq in	LD	270u†	350m†		100			C	900n		5C	P	AD		PV1u ☑
62	VTS3084	.065 sq in	LD	270u†	350m†		100			C	900n		5C	P	AD		PV1ac ☑
63	SPD102	.078 sq in	LD	280u†	350m		100			C	850n		28	P	AD	A	PV13c
64	NSL701	.014 sq in	LD	300u	350m		500		25m	E	950n	5.0	6C	N	AD		PV105 ☑
65	NSL701-1	.005 sq in	LD	300u†	350m		500		25m	E	850n	5.0		N	AD	♦	PV105 ☑
66	55P	.028 Sq in	LD	310u	350m				10m	F	935n	12			AD		PV148a
67	55PBH	.18 sq cm	LD	310u	350m				10m	F	935n	12			AD PLANAR		PV148a ☑
68	55PBHL	.18 Sq cm	LD	310u	350m				10m	F	935n	12			AD BLUE		PV148a ☑
69	55PBL	.028 Sq in	LD	310u	350m				10m	F	935n	12			AD BLUE		PV148a ☑
70	55PL	.020 Sq in	LD	310u	350m				10m	F	935n	12			AD		PV148a ☑
71	SS500	.215 in	LD	400u	350m		1.0k			F	800n		6H		AD NorP		PV62 Ø
72	NSL782	.023 sq in	LD	420u	350m		500		25m	E	850n	5.0	6C	N	AD		PV111 Ø
73	VTS2083	.130 sq in	LD	550u†	350m†		100			C	900n		5C	P	AD		PV1v ☑
74	VTS3083	.130 sq in	LD	550u†	350m†		100			C	900n		5C	P	AD		PV1ad ☑
75	NSL702	.028 sq in	LD	600u	350m		500		25m	E	950n	5.0	6C	N	AD		PV106 ☑
76	NSL791	.029 sq in	LD	600u	350m		500		25m	E	850n	5.0	6C	N	AD		PV111a Ø
77	VTS2082	.140 sq in	LD	600u†	350m†		100			C	900n		5C	P	AD		PV1w ☑
78	VTS3082	.140 sq in	LD	600u†	350m†		100			C	900n		5C	P	AD		PV1ae ☑
79	51P	.059 Sq in	LD	650u	350m				10m	F	935n	8.0			AD		PV148b
80	51PB	.059 Sq in	LD	650u	350m				10m	F	935n	8.0			AD BLUE		PV148b ☑
81	51PBH	.38 sq cm	LD	650u	350m				10m	F	935n	8.0			AD PLANAR		PV148b ☑
82	51PBHL	.38 Sq cm	LD	650u	350m				10m	F	935n	8.0			AD BLUE		PV148b ☑
83	51PBL	.059 Sq in	LD	650u	350m				10m	F	935n	8.0			AD BLUE		PV148b ☑
84	51PL	.059 Sq in	LD	650u	350m				10m	F	935n	8.0			AD		PV148b ☑
85	SPD530	.155 sq in	LD	650u†	350m		100			C	850n		28	P	AD	B	PV73a ☑
86	NSL792	.054 sq in	LD	1.1m	350m		500		25m	E	850n	5.0	6C	N	AD		PV111b Ø
87	52P	.119 Sq in	LD	1.2m	350m				10m	F	935n	5.0			AD		PV148c
88	52PB	.119 Sq in	LD	1.2m	350m				10m	F	935n	5.0			AD BLUE		PV148c ☑
89	52PBH	.77 sq cm	LD	1.2m	350m				10m	F	935n	5.0			AD PLANAR		PV148c ☑
90	52PBHL	.77 Sq cm	LD	1.2m	350m				10m	F	935n	5.0			AD BLUE		PV148c ☑
91	52PBL	.119 Sq in	LD	1.2m	350m				10m	F	935n	5.0			AD BLUE		PV148c ☑
92	52PL	.119 Sq in	LD	1.2m	350m				10m	F	935n	5.0			AD		PV148c ☑
93	VTS2081	.290 sq in	LD	1.2m†	350m†		100			C	900n		5C	P	AD		PV1x ☑
94	VTS3081	.290 sq in	LD	1.2m†	350m†		100			C	900n		5C	P	AD		PV1af ☑
95	NSL708	.062 sq in	LD	1.3m	350m		500		25m	E	950n	5.0	6C	N	AD		PV105b ☑
96	110P	.133 Sq in	LD	1.4m	350m				10m	F	935n	5.0			AD		PV148d
97	110PB	.133 Sq in	LD	1.4m	350m				10m	F	935n	5.0			AD BLUE		PV148d ☑
98	110PBH	.86 sq cm	LD	1.4m	350m				10m	F	935n	5.0			AD PLANAR		PV148d ☑
99	110PBL	.133 Sq in	LD	1.4m	350m				10m	F	935n	5.0			AD BLUE		PV148d ☑
100	110PL	.133 Sq in	LD	1.4m	350m				10m	F	935n	5.0			AD		PV148d ☑
101	NSL703	.068 sq in	LD	1.4m	350m		500		25m	E	950n	5.0	6C	N	AD		PV106a ☑
102	NSL751	.068 sq in	LD	1.4m	350m		500		25m	E	850n	5.0	6C	N	AD		PV109 Ø
103	VTS2080	.610 sq in	LD	2.5m†	350m†		100			C	900n		5C	P	AD		PV1y ☑
104	VTS3080	.610 sq in	LD	2.5m†	350m†		100			C	900n		5C	P	AD		PV1ag ☑
105	NSL706	.138 sq in	LD	2.9m	350m		500		25m	E	950n	5.0	6C	N	AD		PV107 ☑
106	NSL707	.161 sq in	LD	3.3m	350m		500		25m	E	950n	5.0	6C	N	AD		PV105a ☑
107	NSL705	.246 sq in	LD	4.5m	350m		500		25m	E	950n	5.0	6C	N	AD		PV108 ☑
108	NSL710	.005 sq in	LD	125u	400m		500		25m	E	850n	5.0	6C	N	AD		PT2ae
109	BPY63P	9.8mmx9.8m	LD	650u†	430m†						850n	1.0	5A%		650nA/lx	B ♦	PV138 ☑
110	TP60P	1.3sq cm	LD	380m†	450m†			1.0k		C	850n	1.0	48	P	1uA/lx typ	A	PV99 Ø

SYMBOLS AND CODES EXPLAINED IN INTERPRETER

17. PHOTOVOLTAIC CELLS - Light Detector, General-Purpose (Cont'd)

IN ORDER OF: (1) TYPE (2) Voc MIN (3) Isc MAX & (4) TYPE NUMBER

LINE No.	4 TYPE NUMBER	ACTIVE SURFACE	1 TYPE CODE	3 MIN. OUTPUT CURRENT Isc (A)	2 MIN. OUTPUT VOLTAGE Voc (V)	MIN. OUTPUT PWR. Po (W)	TEST CONDITIONS Ev FT.C (fc)	Ev LUX (lx)	Ee (W/cm2)	SOURC	PEAK WAVE LENGTH λp (m)	MAX. REV. VOLT VR (V)	TEMP RNG. CODE - +	POLARITY	MATERIAL & FEATURES MAT	LEAD CODE	DRAWING
1	TP61P	1.3sq cm	LD	380m†	450m†			1.0k		C	850n	1.0	5A	P	1uA/lx typ	A	PV99 Ø
2	GBTO18	0.018 sq.cm.	LD	0.06m	470m						555n				AD		None
3	GB02505EPL	0.1 Sq.Cm.	LD	0.27m	470m						555n				AD		None
4	GBTO5	0.1 sq.cm.	LD	0.27m	470m						555n				AD		None
5	GB0505EPL	0.2 Sq.Cm.	LD	0.55m	470m						555n				AD		None
6	GBTO8	0.5 sq.cm.	LD	1.38m	470m						555n				AD		None
7	GB1010EPL	0.9 sq.cm.	LD	2.5m	470m						555n				AD		None
8	GB1020EPL	1.8 sq.cm.	LD	5.0m	470m						555n				AD		None
9	R10EB	1.310 in dia	LD		500m†		10k				575n	6.0	57		AC		PV16 Ø
10	R10MB	1.310 in dia	LD		500m†		10k				575n	6.0	57		AC		PV15 Ø
11	R75EB	1.500 in dia	LD		500m†		10k				575n	6.0	57		AC		PV16a Ø
12	R100GB	1.750 in dia	LD		500m†		10k				575n	6.0	57		AC	B	PV19 Ø
13	R100KB	1.750 in dia	LD		500m†		10k				575n	6.0	57		AC	B	PV18 Ø
14	R100MB	1.750 in dia	LD		500m†		10k				575n	6.0	57		AC		PV15a
15	RX80EB	.810 in dia	LD		500m†		10k				575n	6.0	57		AC		PV13
16	RX80HB	.810 in dia	LD		500m†		10k				575n	6.0	57		AC		PV13
17	RX80TB	.810 in dia	LD		500m†		10k				575n	6.0	57		AC	B	PV14 ⊠
18	S14LB	2.200 sq in	LD		500m†		10k			C	575n	6.0	57		AC		PV11m ⊠
19	S17LB	.140 sq in	LD		500m†		10k			C	575n	6.0	57		AC		PV11n ⊠
20	S50LB	.720 sq in	LD		500m†		10k			C	575n	6.0	57		AC		PV11p ⊠
21	S55LB	2.280 sq in	LD		500m†		10k			C	575n	6.0	57		AC		PV11q ⊠
22	S56LB	1.770 sq in	LD		500m†		10k			C	575n	6.0	57		AC		PV11r ⊠
23	S100EB	1.50x.700 in	LD		500m†		10k				575n	6.0	57		AC	A	PV12 ⊠
24	S100LB	1.050 sq in	LD		500m†		10k			C	575n	6.0	57		AC		PV11s ⊠
25	S150LB	.950 sq in	LD		500m†		10k			C	575n	6.0	57		AC		PV11t ⊠
26	VR10EB	1.310 in dia	LD		500m†		10k				560n§	6.0	57		AC		PV16 Ø
27	VR10MB	1.310 in dia	LD		500m†		10k				560n§	6.0	57		AC		PV15 Ø
28	VR75EB	1.500 in dia	LD		500m†		10k				560n§	6.0	57		AC		PV16a Ø
29	VR100GB	1.750 in dia	LD		500m†		10k				560n§	6.0	57		AC	B	PV19 Ø
30	VR100KB	1.750 in dia	LD		500m†		10k				560n§	6.0	57		AC	B	PV18 Ø
31	VR100MB	1.750 in dia	LD		500m†		10k				560n§	6.0	57		AC		PV15a
32	VRX80EB	.810 in dia	LD		500m†		10k				560n§	6.0	57		AC		PV13
33	VRX80HB	.810 in dia	LD		500m†		10k				560n§	6.0	57		AC		PV1e ⊠
34	VRX80TB	.810 in dia	LD		500m†		10k				560n§	6.0	57		AC	B	PV14 ⊠
35	VS14LB	2.200 sq in	LD		500m†		10k			C	560n§	6.0	57		AC		PV11m ⊠
36	VS17LB	.140 sq in	LD		500m†		10k			C	560n§	6.0	57		AC		PV11n ⊠
37	VS50LB	.720 sq in	LD		500m†		10k			C	560n§	6.0	57		AC		PV11p ⊠
38	VS55LB	2.280 sq in	LD		500m†		10k			C	560n§	6.0	57		AC		PV11q ⊠
39	VS56LB	1.770 sq in	LD		500m†		10k			C	560n§	6.0	57		AC		PV11r ⊠
40	VS100EB	1.50x.700 in	LD		500m†		10k				560n§	6.0	57		AC	A	PV12 ⊠
41	VS100LB	1.050 sq in	LD		500m†		10k			C	560n§	6.0	57		AC		PV11s ⊠
42	VS150LB	.950 sq in	LD		500m†		10k			C	560n§	6.0	57		AC		PV11t ⊠
43	RX5LB	.035 sq in	LD	14u	500m†		100			C	575n	6.0	57		AC		PV20 Ø
44	VRX5LB	.035 sq in	LD	14u	500m†		100			C	560n§	6.0	57		AC		PV20 Ø
45	RX10LB	.050 sq in	LD	20u	500m†		100			C	575n	6.0	57		AC		PV20a Ø
46	VRX10LB	.050 sq in	LD	20u	500m†		100			C	560n§	6.0	57		AC		PV20a Ø
47	SX10LB	.070 sq in	LD	28u	500m†		100			C	575n	6.0	57		AC		PV11 ⊠
48	VSX10LB	.070 sq in	LD	28u	500m†		100			C	560n§	6.0	57		AC		PV11 ⊠
49	RX15LB	.110 sq in	LD	44u	500m†		100			C	575n	6.0	57		AC		PV20b Ø
50	VRX15LB	.110 sq in	LD	44u	500m†		100			C	560n§	6.0	57		AC		PV20b Ø
51	S1LB	.230 sq in	LD	88u	500m†		100			C	575n	6.0	57		AC		PV11a ⊠
52	VS1LB	.230 sq in	LD	88u	500m†		100			C	560n§	6.0	57		AC		PV11a ⊠
53	S2LB	.360 sq in	LD	120u	500m†		100			C	575n	6.0	57		AC		PV11b ⊠
54	VS2LB	.360 sq in	LD	120u	500m†		100			C	560n§	6.0	57		AC		PV11b ⊠
55	S5LB	.350 sq in	LD	130u	500m†		100			C	575n	6.0	57		AC		PV11e ⊠
56	VS5LB	.350 sq in	LD	130u	500m†		100			C	560n§	6.0	57		AC		PV11e ⊠
57	RX80LB	.520 sq in	LD	170u	500m†		100			C	575n	6.0	57		AC		PV20c Ø
58	VRX80LB	.520 sq in	LD	170u	500m†		100			C	560n§	6.0	57		AC		PV20c Ø
59	S3LB	.530 sq in	LD	180u	500m†		100			C	575n	6.0	57		AC		PV11c ⊠
60	VS3LB	.530 sq in	LD	180u	500m†		100			C	560n§	6.0	57		AC		PV11c ⊠
61	S7LB	.640 sq in	LD	205u	500m†		100			C	575n	6.0	57		AC		PV11f ⊠
62	VS7LB	.640 sq in	LD	205u	500m†		100			C	560n§	6.0	57		AC		PV11f ⊠
63	S4LB	.660 sq in	LD	220u	500m†		100			C	575n	6.0	57		AC		PV11d ⊠
64	S8LB	.670 sq in	LD	220u	500m†		100			C	575n	6.0	57		AC		PV11g ⊠
65	VS4LB	.660 sq in	LD	220u	500m†		100			C	560n§	6.0	57		AC		PV11d ⊠
66	VS8LB	.670 sq in	LD	220u	500m†		100			C	560n§	6.0	57		AC		PV11g ⊠
67	S10LB	.700 sq in	LD	225u	500m†		100			C	575n	6.0	57		AC		PV11h ⊠
68	VS10LB	.700 sq in	LD	225u	500m†		100			C	560n§	6.0	57		AC		PV11h ⊠
69	R1LB	.610 sq in	LD	230u	500m†		100			C	575n	6.0	57		AC		PV20d Ø
70	VR1LB	.610 sq in	LD	230u	500m†		100			C	560n§	6.0	57		AC		PV20d Ø
71	S11LB	.740 sq in	LD	235u	500m†		100			C	575n	6.0	57		AC		PV11j ⊠
72	VS11LB	.740 sq in	LD	235u	500m†		100			C	560n§	6.0	57		AC		PV11j ⊠
73	R5LB	1.100 sq in	LD	390u	500m†		100			C	575n	6.0	57		AC		PV20e Ø
74	VR5LB	1.100 sq in	LD	390u	500m†		100			C	560n§	6.0	57		AC		PV20e Ø
75	R10LB	1.350 sq in	LD	430u	500m†		100			C	575n	6.0	57		AC		PV20f Ø
76	VR10LB	1.350 sq in	LD	430u	500m†		100			C	560n§	6.0	57		AC		PV20f Ø
77	R75LB	1.750 sq in	LD	500u	500m†		100			C	575n	6.0	57		AC		PV20g Ø
78	S13LB	1.820 sq in	LD	500u	500m†		100			C	575n	6.0	57		AC		PV11k ⊠
79	VR75LB	1.750 sq in	LD	500u	500m†		100			C	560n§	6.0	57		AC		PV20g Ø
80	VS13LB	1.820 sq in	LD	500u	500m†		100			C	560n§	6.0	57		AC		PV11k ⊠
81	R100LB	2.40 sq in	LD	850u	500m†		100			C	575n	6.0	57		AC		PV20h Ø
82	VR100LB	2.400 sq in	LD	850u	500m†		100			C	560n§	6.0	57		AC		PV20h Ø
83	MS10A	.196x.181 in	LD	2.2m†	500m†		3.0k			C	850n		5C		AD		None
84	MS3A	.064x.403 in	LD	2.6m†	500m†		3.0k			C	850n		5C		AD	A	PV37 ⊠
85	MS3B	.064x.403 in	LD	2.6m†	500m†		3.0k			C	850n		5C		AD	A	PV37 ⊠
86	MS4A	.207x.242 in	LD	5.0m†	500m†		3.0k			C	850n		5C	N	AD	A	PV38 ⊠
87	MS4B(2)	.207x.242 in	LD	5.0m†	500m†		3.0k			C	850n		5C	N	AD	A	PV38 ⊠
88	MS5A	.207x.492 in	LD	10m†	500m†		3.0k			C	850n		5C	N	AD	A	PV38a ⊠
89	MS5B	.207x.492 in	LD	10m†	500m†		3.0k			C	850n		5C	N	AD	A	PV38a ⊠
90	MS6A	.75x.205 in	LD	15m†	500m†		3.0k			C	850n		5C		AD	B	PV33a ⊠
91	MS6B	.75x.205 in	LD	15m†	500m†		3.0k			C	850n		5C		AD	B	PV33a ⊠
92	MS7A	1x.205 in	LD	20m†	500m†		3.0k			C	850n		5C		AD	B	PV33b ⊠
93	MS7B	1x.205 in	LD	20m†	500m†		3.0k			C	850n		5C		AD	B	PV33b ⊠
94	MS2A	.75x.455 in	LD	27m†	500m†		3.0k			C	850n		5C		AD	B	PV35 ⊠
95	MS2AE	.75x.455 in	LD	31m†	500m†		3.0k			C	850n		58		AD		PV36 ⊠
96	FRTO18	0.018 sq.cm.	LD	0.25m	550m						900n				AD		None
97	VBTO18	0.018 sq.cm.	LD	0.47m	550m						900n				AD		None
98	FR02505EPL	0.1 sq.cm.	LD	1.28m	550m						900n				AD		None
99	FRTO5	0.1 sq.cm.	LD	1.28m	550m						900n				AD		None
100	VB02505EPL	0.1 sq.cm.	LD	2.3m	550m						900n				AD		None
101	VBTO5	0.1 sq.cm.	LD	2.3m	550m						900n				AD		None
102	FR0505EPL	0.2 sq.cm.	LD	2.55m	550m						900n				AD		None
103	VB0505EPL	0.2 sq.cm.	LD	4.7m	550m						900n				AD		None
104	FRTO8	0.5 sq.cm.	LD	6.38m	550m						900n				AD		None
105	FR1010EPL	0.9 sq.cm.	LD	11.5m	550m						900n				AD		None
106	VBTO8	0.5 sq.cm.	LD	11.6m	550m						900n				AD		None
107	VB1010EPL	0.9 sq.cm.	LD	21.0m	550m						900n				AD		None
108	FR1020EPL	1.8 sq. cm.	LD	23.0m	550m						900n				AD		None
109	MS2B(2)	.75x.455 in	LD	31m†	550m†		3.0k			C	850n		5C		AD	B	PV35 ⊠
110	MS2BE	.75x.455 in	LD	34m†	550m†		3.0k			C	850n		58		AD		PV36 ⊠

17. PHOTOVOLTAIC CELLS – Light Detector, General-Purpose (Cont'd)

IN ORDER OF: (1) TYPE (2) Voc MIN (3) Isc MAX & (4) TYPE NUMBER

LINE No.	4 TYPE NUMBER	ACTIVE SURFACE	1 TYPE CODE	3 MIN. OUTPUT CURRENT Isc (A)	2 MIN. OUTPUT VOLTAGE Voc (V)	MIN. OUTPUT PWR. Po (W)	TEST CONDITIONS Ev FT.C (fc)	Ev LUX (lx)	Ee (W/cm2)	SOURC	PEAK WAVE LENGTH λp (m)	MAX. REV. VOLT VR (V)	TEMP RNG. CODE - +	POLARITY	MATERIAL & FEATURES MAT	LEAD CODE	DRAWING
1	VB1020EPL	1.8 sq.cm.	LD	42.0m	550m						900n				AD		None
2	S0505A6	.200x.200 in	LD	25m†	560m†				100m		800n		28	N	AD;Eff 6%		PV4 ☑
3	S0505A6PL	.200x.200 in	LD	25m†	560m†				100m		800n		28	N	AD;Eff 6%		PV4j ☑
4	S0505A7	.200x.200 in	LD	25m†	560m†				100m		800n		28	N	AD;Eff 7%		PV4 ☑
5	S0505A7PL	.200x.200 in	LD	25m†	560m†				100m		800n		28	N	AD;Eff 7%		PV4j ☑
6	S0505A8	.200x.200 in	LD	25m†	560m†				100m		800n		28	N	AD;Eff 8%		PV4 ☑
7	S0505A8PL	.200x.200 in	LD	25m†	560m†				100m		800n		28	N	AD;Eff 8%		PV4j ☑
8	S0505A9	.200x.200 in	LD	25m†	560m†				100m		800n		28	N	AD;Eff 9%		PV4 ☑
9	S0505A9PL	.200x.200 in	LD	25m†	560m†				100m		800n		28	N	AD;Eff 9%		PV4j ☑
10	S0505A10	.200x.200 in	LD	25m†	560m†				100m		800n		28	N	AD;Eff 10%		PV4 ☑
11	S0505A10PL	.200x.200 in	LD	25m†	560m†				100m		800n		28	N	AD;Eff 10%		PV4j ☑
12	S0505A11	.200x.200 in	LD	25m†	560m†				100m		800n		28	N	AD;Eff 11%		PV4 ☑
13	S0505A11PL	.200x.200 in	LD	25m†	560m†				100m		800n		28	N	AD;Eff 11%		PV4j ☑
14	S0505A12	.200x.200 in	LD	25m†	560m†				100m		800n		28	N	AD;Eff 12%		PV4 ☑
15	S0505A12PL	.200x.200 in	LD	25m†	560m†				100m		800n		28	N	AD;Eff 12%		PV4j ☑
16	S0505E6	.200x.200 in	LD	25m†	560m†				100m		800n		28	P	AD;Eff 6%		PV4 ☑
17	S0505E6PL	.200x.200 in	LD	25m†	560m†				100m		800n		28	P	AD;Eff 6%		PV4j ☑
18	S0505E7	.200x.200 in	LD	25m†	560m†				100m		800n		28	P	AD;Eff 7%		PV4 ☑
19	S0505E7PL	.200x.200 in	LD	25m†	560m†				100m		800n		28	P	AD;Eff 7%		PV4j ☑
20	S0505E8	.200x.200 in	LD	25m†	560m†				100m		800n		28	P	AD;Eff 8%		PV4 ☑
21	S0505E8PL	.200x.200 in	LD	25m†	560m†				100m		800n		28	P	AD;Eff 8%		PV4j ☑
22	S0505E9	.200x.200 in	LD	25m†	560m†				100m		800n		28	P	AD;Eff 9%		PV4 ☑
23	S0505E9PL	.200x.200 in	LD	25m†	560m†				100m		800n		28	P	AD;Eff 9%		PV4j ☑
24	S0505E10	.200x.200 in	LD	25m†	560m†				100m		800n		28	P	AD;Eff 10%		PV4 ☑
25	S0505E10PL	.200x.200 in	LD	25m†	560m†				100m		800n		28	P	AD;Eff 10%		PV4j ☑
26	S0505E11	.200x.200 in	LD	25m†	560m†				100m		800n		28	P	AD;Eff 11%		PV4 ☑
27	S0505E11PL	.200x.200 in	LD	25m†	560m†				100m		800n		28	P	AD;Eff 11%		PV4j ☑
28	S0505E12	.200x.200 in	LD	25m†	560m†				100m		800n		28	P	AD;Eff 12%		PV4 ☑
29	S0505E12PL	.200x.200 in	LD	25m†	560m†				100m		800n		28	P	AD;Eff 12%		PV4j ☑
30	S0510A6	.200x.400 in	LD	25m†	560m†				100m		800n		28	N	AD;Eff 6%		PV4a ☑
31	S0510A6PL	.200x.400 in	LD	25m†	560m†				100m		800n		28	N	AD;Eff 6%		PV4k ☑
32	S0510A7	.200x.400 in	LD	25m†	560m†				100m		800n		28	N	AD;Eff 7%		PV4a ☑
33	S0510A7PL	.200x.400 in	LD	25m†	560m†				100m		800n		28	N	AD;Eff 7%		PV4k ☑
34	S0510A8	.200x.400 in	LD	25m†	560m†				100m		800n		28	N	AD;Eff 8%		PV4a ☑
35	S0510A8PL	.200x.400 in	LD	25m†	560m†				100m		800n		28	N	AD;Eff 8%		PV4k ☑
36	S0510A9	.200x.400 in	LD	25m†	560m†				100m		800n		28	N	AD;Eff 9%		PV4a ☑
37	S0510A9PL	.200x.400 in	LD	25m†	560m†				100m		800n		28	N	AD;Eff 9%		PV4k ☑
38	S0510A10	.200x.400 in	LD	25m†	560m†				100m		800n		28	N	AD;Eff 10%		PV4a ☑
39	S0510A10PL	.200x.400 in	LD	25m†	560m†				100m		800n		28	N	AD;Eff 10%		PV4k ☑
40	S0510A11	.200x.400 in	LD	25m†	560m†				100m		800n		28	N	AD;Eff 11%		PV4a ☑
41	S0510A11PL	.200x.400 in	LD	25m†	560m†				100m		800n		28	N	AD;Eff 11%		PV4k ☑
42	S0510A12	.200x.400 in	LD	25m†	560m†				100m		800n		28	N	AD;Eff 12%		PV4a ☑
43	S0510A12PL	.200x.400 in	LD	25m†	560m†				100m		800n		28	N	AD;Eff 12%		PV4k ☑
44	S0510E6	.200x.400 in	LD	25m†	560m†				100m		800n		28	P	AD;Eff 6%		PV4a ☑
45	S0510E6PL	.200x.400 in	LD	25m†	560m†				100m		800n		28	P	AD;Eff 6%		PV4k ☑
46	S0510E7	.200x.400 in	LD	25m†	560m†				100m		800n		28	P	AD;Eff 7%		PV4a ☑
47	S0510E7PL	.200x.400 in	LD	25m†	560m†				100m		800n		28	P	AD;Eff 7%		PV4k ☑
48	S0510E8	.200x.400 in	LD	25m†	560m†				100m		800n		28	P	AD;Eff 8%		PV4a ☑
49	S0510E8PL	.200x.400 in	LD	25m†	560m†				100m		800n		28	P	AD;Eff 8%		PV4k ☑
50	S0510E9	.200x.400 in	LD	25m†	560m†				100m		800n		28	P	AD;Eff 9%		PV4a ☑
51	S0510E9PL	.200x.400 in	LD	25m†	560m†				100m		800n		28	P	AD;Eff 9%		PV4k ☑
52	S0510E10	.200x.400 in	LD	25m†	560m†				100m		800n		28	P	AD;Eff 10%		PV4a ☑
53	S0510E10PL	.200x.400 in	LD	25m†	560m†				100m		800n		28	P	AD;Eff 10%		PV4k ☑
54	S0510E11	.200x.400 in	LD	25m†	560m†				100m		800n		28	P	AD;Eff 11%		PV4a ☑
55	S0510E11PL	.200x.400 in	LD	25m†	560m†				100m		800n		28	P	AD;Eff 11%		PV4k ☑
56	S0510E12	.200x.400 in	LD	25m†	560m†				100m		800n		28	P	AD;Eff 12%		PV4a ☑
57	S0510E12PL	.200x.400 in	LD	25m†	560m†				100m		800n		28	P	AD;Eff 12%		PV4k ☑
58	S0520A6	.200x.800 in	LD	25m†	560m†				100m		800n		28	N	AD;Eff 6%		PV4b ☑
59	S0520A6PL	.200x.800 in	LD	25m†	560m†				100m		800n		28	N	AD;Eff 6%		PV4m ☑
60	S0520A7	.200x.800 in	LD	25m†	560m†				100m		800n		28	N	AD;Eff 7%		PV4b ☑
61	S0520A7PL	.200x.800 in	LD	25m†	560m†				100m		800n		28	N	AD;Eff 7%		PV4m ☑
62	S0520A8	.200x.800 in	LD	25m†	560m†				100m		800n		28	N	AD;Eff 8%		PV4b ☑
63	S0520A8PL	.200x.800 in	LD	25m†	560m†				100m		800n		28	N	AD;Eff 8%		PV4m ☑
64	S0520A9	.200x.800 in	LD	25m†	560m†				100m		800n		28	N	AD;Eff 9%		PV4b ☑
65	S0520A9PL	.200x.800in	LD	25m†	560m†				100m		800n		28	N	AD;Eff 9%		PV4m ☑
66	S0520A10	.200x.800 in	LD	25m†	560m†				100m		800n		28	N	AD;Eff 10%		PV4b ☑
67	S0520A10PL	.200x.800in	LD	25m†	560m†				100m		800n		28	N	AD;Eff 10%		PV4m ☑
68	S0520A11	.200x.800 in	LD	25m†	560m†				100m		800n		28	N	AD;Eff 11%		PV4b ☑
69	S0520A11PL	.200x.800in	LD	25m†	560m†				100m		800n		28	N	AD;Eff 11%		PV4m ☑
70	S0520A12	.200x.800 in	LD	25m†	560m†				100m		800n		28	N	AD;Eff 12%		PV4b ☑
71	S0520A12PL	.200x.800in	LD	25m†	560m†				100m		800n		28	N	AD;Eff 12%		PV4m ☑
72	S0520E6	.200x.800 in	LD	25m†	560m†				100m		800n		28	P	AD;Eff 6%		PV4b ☑
73	S0520E6PL	.200x.800 in	LD	25m†	560m†				100m		800n		28	P	AD;Eff 6%		PV4m ☑
74	S0520E7	.200x.800 in	LD	25m†	560m†				100m		800n		28	P	AD;Eff 7%		PV4b ☑
75	S0520E7PL	.200x.800 in	LD	25m†	560m†				100m		800n		28	P	AD;Eff 7%		PV4m ☑
76	S0520E8	.200x.800 in	LD	25m†	560m†				100m		800n		28	P	AD;Eff 8%		PV4b ☑
77	S0520E8PL	.200x.800 in	LD	25m†	560m†				100m		800n		28	P	AD;Eff 8%		PV4m ☑
78	S0520E9	.200x.800 in	LD	25m†	560m†				100m		800n		28	P	AD;Eff 9%		PV4b ☑
79	S0520E9PL	.200x.800 in	LD	25m†	560m†				100m		800n		28	P	AD;Eff 9%		PV4m ☑
80	S0520E10	.200x.800 in	LD	25m†	560m†				100m		800n		28	P	AD;Eff 10%		PV4b ☑
81	S0520E10PL	.200x.800 in	LD	25m†	560m†				100m		800n		28	P	AD;Eff 10%		PV4m ☑
82	S0520E11	.200x.800 in	LD	25m†	560m†				100m		800n		28	P	AD;Eff 11%		PV4b ☑
83	S0520E11PL	.200x.800 in	LD	25m†	560m†				100m		800n		28	P	AD;Eff 11%		PV4m ☑
84	S0520E12	.200x.800 in	LD	25m†	560m†				100m		800n		28	P	AD;Eff 12%		PV4b ☑
85	S0520E12PL	.200x.800 in	LD	25m†	560m†				100m		800n		28	P	AD;Eff 12%		PV4m ☑
86	S0520GA6	.200x.800 in	LD	25m†	560m†				100m		800n		28	N	AD;Eff 6%		PV4b ☑
87	S0520GA6PL	.200x.800 in	LD	25m†	560m†				100m		800n		28	N	AD;Eff 6%		PV4m ☑
88	S0520GA7	.200x.800 in	LD	25m†	560m†				100m		800n		28	N	AD;Eff 7%		PV4b ☑
89	S0520GA7PL	.200x.800in	LD	25m†	560m†				100m		800n		28	N	AD;Eff 7%		PV4m ☑
90	S0520GA8	.200x.800 in	LD	25m†	560m†				100m		800n		28	N	AD;Eff 8%		PV4b ☑
91	S0520GA8PL	.200x.800 in	LD	25m†	560m†				100m		800n		28	N	AD;Eff 8%		PV4m ☑
92	S0520GA9	.200x.800 in	LD	25m†	560m†				100m		800n		28	N	AD;Eff 9%		PV4b ☑
93	S0520GA9PL	.200x.800 in	LD	25m†	560m†				100m		800n		28	N	AD;Eff 9%		PV4m ☑
94	S0520GA10	.200x.800 in	LD	25m†	560m†				100m		800n		28	N	AD;Eff 10%		PV4b ☑
95	S0520GA10PL	.200x.800 in	LD	25m†	560m†				100m		800n		28	N	AD;Eff 10%		PV4m ☑
96	S0520GA11	.200x.800 in	LD	25m†	560m†				100m		800n		28	N	AD;Eff 11%		PV4b ☑
97	S0520GA11PL	.200x.800 in	LD	25m†	560m†				100m		800n		28	N	AD;Eff 11%		PV4m ☑
98	S0520GA12	.200x.800 in	LD	25m†	560m†				100m		800n		28	N	AD;Eff 12%		PV4b ☑
99	S0520GA12PL	.200x.800 in	LD	25m†	560m†				100m		800n		28	N	AD;Eff 12%		PV4m ☑
100	S0520GE6	.200x.800 in	LD	25m†	560m†				100m		800n		28	P	AD;Eff 6%		PV4b ☑
101	S0520GE6PL	.200x.800 in	LD	25m†	560m†				100m		800n		28	P	AD;Eff 6%		PV4m ☑
102	S0520GE7	.200x.800 in	LD	25m†	560m†				100m		800n		28	P	AD;Eff 7%		PV4b ☑
103	S0520GE7PL	.200x.800 in	LD	25m†	560m†				100m		800n		28	P	AD;Eff 7%		PV4m ☑
104	S0520GE8	.200x.800 in	LD	25m†	560m†				100m		800n		28	P	AD;Eff 8%		PV4b ☑
105	S0520GE8PL	.200x.800 in	LD	25m†	560m†				100m		800n		28	P	AD;Eff 8%		PV4m ☑
106	S0520GE9	.200x.800 in	LD	25m†	560m†				100m		800n		28	P	AD;Eff 9%		PV4b ☑
107	S0520GE9PL	.200x.800 in	LD	25m†	560m†				100m		800n		28	P	AD;Eff 9%		PV4m ☑
108	S0520GE10	.200x.800 in	LD	25m†	560m†				100m		800n		28	P	AD;Eff 10%		PV4b ☑
109	S0520GE10PL	.200x.800 in	LD	25m†	560m†				100m		800n		28	P	AD;Eff 10%		PV4m ☑
110	S0520GE11	.200x.800 in	LD	25m†	560m†				100m		800n		28	P	AD;Eff 11%		PV4b ☑

SYMBOLS AND CODES EXPLAINED IN INTERPRETER

17. PHOTOVOLTAIC CELLS - Light Detector, General-Purpose (Cont'd)

IN ORDER OF: (1) TYPE (2) Voc MIN (3) Isc MAX & (4) TYPE NUMBER

LINE No.	4 TYPE NUMBER	ACTIVE SURFACE	1 TYPE CODE	3 MIN. OUTPUT CURRENT Isc (A)	2 MIN. OUTPUT VOLTAGE Voc (V)	MIN. OUTPUT PWR. Po (W)	TEST CONDITIONS Ev FT.C (fc)	Ev LUX (lx)	Ee (W/cm2)	SOURC	PEAK WAVE LENGTH λp (m)	MAX. REV. VOLT VR (V)	TEMP RNG. CODE - +	POLARITY	MATERIAL & FEATURES MAT	LEAD CODE	DRAWING
1	S0520GE11PL	.200x.800 in	LD	25m†	560m†				100m		800n		28	P	AD;Eff 11%		PV4m ☑
2	S0520GE12	.200x.800 in	LD	25m†	560m†				100m		800n		28	P	AD;Eff 12%		PV4b ☑
3	S0520GE12PL	.200x.800 in	LD	25m†	560m†				100m		800n		28	P	AD;Eff 12%		PV4m ☑
4	S1005A6	.400x.200 in	LD	25m†	560m†				100m		800n		28	N	AD;Eff 6%		PV4c ☑
5	S1005A6PL	.400x.200 in	LD	25m†	560m†				100m		800n		28	N	AD;Eff 6%		PV4n ☑
6	S1005A7	.400x.200 in	LD	25m†	560m†				100m		800n		28	N	AD;Eff 7%		PV4c ☑
7	S1005A7PL	.400x.200 in	LD	25m†	560m†				100m		800n		28	N	AD;Eff 7%		PV4n ☑
8	S1005A8	.400x.200 in	LD	25m†	560m†				100m		800n		28	N	AD;Eff 8%		PV4c ☑
9	S1005A8PL	.400x.200 in	LD	25m†	560m†				100m		800n		28	N	AD;Eff 8%		PV4n ☑
10	S1005A9	.400x.200 in	LD	25m†	560m†				100m		800n		28	N	AD;Eff 9%		PV4c ☑
11	S1005A9PL	.400x.200 in	LD	25m†	560m†				100m		800n		28	N	AD;Eff 9%		PV4n ☑
12	S1005A10	.400x.200 in	LD	25m†	560m†				100m		800n		28	N	AD;Eff 10%		PV4c ☑
13	S1005A10PL	.400x.200 in	LD	25m†	560m†				100m		800n		28	N	AD;Eff 10%		PV4n ☑
14	S1005A11	.400x.200 in	LD	25m†	560m†				100m		800n		28	N	AD;Eff 11%		PV4c ☑
15	S1005A11PL	.400x.200 in	LD	25m†	560m†				100m		800n		28	N	AD;Eff 11%		PV4n ☑
16	S1005A12	.400x.200 in	LD	25m†	560m†				100m		800n		28	N	AD;Eff 12%		PV4c ☑
17	S1005A12PL	.400x.200 in	LD	25m†	560m†				100m		800n		28	N	AD;Eff 12%		PV4n ☑
18	S1005E6	.400x.200 in	LD	25m†	560m†				100m		800n		28	P	AD;Eff 6%		PV4c ☑
19	S1005E6PL	.400x.200 in	LD	25m†	560m†				100m		800n		28	P	AD;Eff 6%		PV4n ☑
20	S1005E7	.400x.200 in	LD	25m†	560m†				100m		800n		28	P	AD;Eff 7%		PV4c ☑
21	S1005E7PL	.400x.200 in	LD	25m†	560m†				100m		800n		28	P	AD;Eff 7%		PV4n ☑
22	S1005E8	.400x.200 in	LD	25m†	560m†				100m		800n		28	P	AD;Eff 8%		PV4c ☑
23	S1005E8PL	.400x.200 in	LD	25m†	560m†				100m		800n		28	P	AD;Eff 8%		PV4n ☑
24	S1005E9	.400x.200 in	LD	25m†	560m†				100m		800n		28	P	AD;Eff 9%		PV4c ☑
25	S1005E9PL	.400x.200 in	LD	25m†	560m†				100m		800n		28	P	AD;Eff 9%		PV4n ☑
26	S1005E10	.400x.200 in	LD	25m†	560m†				100m		800n		28	P	AD;Eff 10%		PV4c ☑
27	S1005E10PL	.400x.200 in	LD	25m†	560m†				100m		800n		28	P	AD;Eff 10%		PV4n ☑
28	S1005E11	.400x.200 in	LD	25m†	560m†				100m		800n		28	P	AD;Eff 11%		PV4c ☑
29	S1005E11PL	.400x.200 in	LD	25m†	560m†				100m		800n		28	P	AD;Eff 11%		PV4n ☑
30	S1005E12	.400x.200 in	LD	25m†	560m†				100m		800n		28	P	AD;Eff 12%		PV4c ☑
31	S1005E12PL	.400x.200 in	LD	25m†	560m†				100m		800n		28	P	AD;Eff 12%		PV4n ☑
32	S1010A6	.400x.400 in	LD	25m†	560m†				100m		800n		28	N	AD;Eff 6%		PV4d ☑
33	S1010A6PL	.400x.400 in	LD	25m†	560m†				100m		800n		28	N	AD;Eff 6%		PV4p ☑
34	S1010A7	.400x.400 in	LD	25m†	560m†				100m		800n		28	N	AD;Eff 7%		PV4d ☑
35	S1010A7PL	.400x.400 in	LD	25m†	560m†				100m		800n		28	N	AD;Eff 7%		PV4p ☑
36	S1010A8	.400x.400 in	LD	25m†	560m†				100m		800n		28	N	AD;Eff 8%		PV4d ☑
37	S1010A8PL	.400x.400 in	LD	25m†	560m†				100m		800n		28	N	AD;Eff 8%		PV4p ☑
38	S1010A9	.400x.400 in	LD	25m†	560m†				100m		800n		28	N	AD;Eff 9%		PV4d ☑
39	S1010A9PL	.400x.400 in	LD	25m†	560m†				100m		800n		28	N	AD;Eff 9%		PV4p ☑
40	S1010A10	.400x.400 in	LD	25m†	560m†				100m		800n		28	N	AD;Eff 10%		PV4d ☑
41	S1010A10PL	.400x.400 in	LD	25m†	560m†				100m		800n		28	N	AD;Eff 10%		PV4p ☑
42	S1010A11	.400x.400 in	LD	25m†	560m†				100m		800n		28	N	AD;Eff 11%		PV4d ☑
43	S1010A11PL	.400x.400 in	LD	25m†	560m†				100m		800n		28	N	AD;Eff 11%		PV4p ☑
44	S1010A12	.400x.400 in	LD	25m†	560m†				100m		800n		28	N	AD;Eff 12%		PV4d ☑
45	S1010A12PL	.400x.400 in	LD	25m†	560m†				100m		800n		28	N	AD;Eff 12%		PV4p ☑
46	S1010E6	.400x.400 in	LD	25m†	560m†				100m		800n		28	P	AD;Eff 6%		PV4d ☑
47	S1010E6PL	.400x.400 in	LD	25m†	560m†				100m		800n		28	P	AD;Eff 6%		PV4p ☑
48	S1010E7	.400x.400 in	LD	25m†	560m†				100m		800n		28	P	AD;Eff 7%		PV4d ☑
49	S1010E7PL	.400x.400 in	LD	25m†	560m†				100m		800n		28	P	AD;Eff 7%		PV4p ☑
50	S1010E8	.400x.400 in	LD	25m†	560m†				100m		800n		28	P	AD;Eff 8%		PV4d ☑
51	S1010E8PL	.400x.400 in	LD	25m†	560m†				100m		800n		28	P	AD;Eff 8%		PV4p ☑
52	S1010E9	.400x.400 in	LD	25m†	560m†				100m		800n		28	P	AD;Eff 9%		PV4d ☑
53	S1010E9PL	.400x.400 in	LD	25m†	560m†				100m		800n		28	P	AD;Eff 9%		PV4p ☑
54	S1010E10	.400x.400 in	LD	25m†	560m†				100m		800n		28	P	AD;Eff 10%		PV4d ☑
55	S1010E10PL	.400x.400 in	LD	25m†	560m†				100m		800n		28	P	AD;Eff 10%		PV4p ☑
56	S1010E11	.400x.400 in	LD	25m†	560m†				100m		800n		28	P	AD;Eff 11%		PV4d ☑
57	S1010E11PL	.400x.400 in	LD	25m†	560m†				100m		800n		28	P	AD;Eff 11%		PV4p ☑
58	S1010E12	.400x.400 in	LD	25m†	560m†				100m		800n		28	P	AD;Eff 12%		PV4d ☑
59	S1010E12PL	.400x.400 in	LD	25m†	560m†				100m		800n		28	P	AD;Eff 12%		PV4p ☑
60	S1010GA6	.400x.400 in	LD	25m†	560m†				100m		800n		28	N	AD;Eff 6%		PV4d ☑
61	S1010GA6PL	.400x.400 in	LD	25m†	560m†				100m		800n		28	N	AD;Eff 6%		PV4p ☑
62	S1010GA7	.400x.400 in	LD	25m†	560m†				100m		800n		28	N	AD;Eff 7%		PV4d ☑
63	S1010GA7PL	.400x.400 in	LD	25m†	560m†				100m		800n		28	N	AD;Eff 7%		PV4p ☑
64	S1010GA8	.400x.400 in	LD	25m†	560m†				100m		800n		28	N	AD;Eff 8%		PV4d ☑
65	S1010GA8PL	.400x.400 in	LD	25m†	560m†				100m		800n		28	N	AD;Eff 8%		PV4p ☑
66	S1010GA9	.400x.400 in	LD	25m†	560m†				100m		800n		28	N	AD;Eff 9%		PV4d ☑
67	S1010GA9PL	.400x.400 in	LD	25m†	560m†				100m		800n		28	N	AD;Eff 9%		PV4p ☑
68	S1010GA10	.400x.400 in	LD	25m†	560m†				100m		800n		28	N	AD;Eff 10%		PV4d ☑
69	S1010GA10PL	.400x.400 in	LD	25m†	560m†				100m		800n		28	N	AD;Eff 10%		PV4p ☑
70	S1010GA11	.400x.400 in	LD	25m†	560m†				100m		800n		28	N	AD;Eff 11%		PV4d ☑
71	S1010GA11PL	.400x.400 in	LD	25m†	560m†				100m		800n		28	N	AD;Eff 11%		PV4p ☑
72	S1010GA12	.400x.400 in	LD	25m†	560m†				100m		800n		28	N	AD;Eff 12%		PV4d ☑
73	S1010GA12PL	.400x.400 in	LD	25m†	560m†				100m		800n		28	N	AD;Eff 12%		PV4p ☑
74	S1010GE6	.400x.400 in	LD	25m†	560m†				100m		800n		28	P	AD;Eff 6%		PV4d ☑
75	S1010GE6PL	.400x.400 in	LD	25m†	560m†				100m		800n		28	P	AD;Eff 6%		PV4p ☑
76	S1010GE7	.400x.400 in	LD	25m†	560m†				100m		800n		28	P	AD;Eff 7%		PV4d ☑
77	S1010GE7PL	.400x.400 in	LD	25m†	560m†				100m		800n		28	P	AD;Eff 7%		PV4p ☑
78	S1010GE8	.400x.400 in	LD	25m†	560m†				100m		800n		28	P	AD;Eff 8%		PV4d ☑
79	S1010GE8PL	.400x.400 in	LD	25m†	560m†				100m		800n		28	P	AD;Eff 8%		PV4p ☑
80	S1010GE9	.400x.400 in	LD	25m†	560m†				100m		800n		28	P	AD;Eff 9%		PV4d ☑
81	S1010GE9PL	.400x.400 in	LD	25m†	560m†				100m		800n		28	P	AD;Eff 9%		PV4p ☑
82	S1010GE10	.400x.400 in	LD	25m†	560m†				100m		800n		28	P	AD;Eff 10%		PV4d ☑
83	S1010GE10PL	.400x.400 in	LD	25m†	560m†				100m		800n		28	P	AD;Eff 10%		PV4p ☑
84	S1010GE11	.400x.400 in	LD	25m†	560m†				100m		800n		28	P	AD;Eff 11%		PV4d ☑
85	S1010GE11PL	.400x.400 in	LD	25m†	560m†				100m		800n		28	P	AD;Eff 11%		PV4p ☑
86	S1010GE12	.400x.400 in	LD	25m†	560m†				100m		800n		28	P	AD;Eff 12%		PV4d ☑
87	S1010GE12PL	.400x.400 in	LD	25m†	560m†				100m		800n		28	P	AD;Eff 12%		PV4p ☑
88	S1020A6	.400x.800 in	LD	25m†	560m†				100m		800n		28	N	AD;Eff 6%		PV4e ☑
89	S1020A6PL	.400x.800 in	LD	25m†	560m†				100m		800n		28	N	AD;Eff 6%		PV4q ☑
90	S1020A7	.400x.800 in	LD	25m†	560m†				100m		800n		28	N	AD;Eff 7%		PV4e ☑
91	S1020A7PL	.400x.800 in	LD	25m†	560m†				100m		800n		28	N	AD;Eff 7%		PV4q ☑
92	S1020A8	.400x.800 in	LD	25m†	560m†				100m		800n		28	N	AD;Eff 8%		PV4e ☑
93	S1020A8PL	.400x.800 in	LD	25m†	560m†				100m		800n		28	N	AD;Eff 8%		PV4q ☑
94	S1020A9	.400x.800 in	LD	25m†	560m†				100m		800n		28	N	AD;Eff 9%		PV4e ☑
95	S1020A9PL	.400x.800 in	LD	25m†	560m†				100m		800n		28	N	AD;Eff 9%		PV4q ☑
96	S1020A10	.400x.800 in	LD	25m†	560m†				100m		800n		28	N	AD;Eff 10%		PV4e ☑
97	S1020A10PL	.400x.800 in	LD	25m†	560m†				100m		800n		28	N	AD;Eff 10%		PV4q ☑
98	S1020A11	.400x.800 in	LD	25m†	560m†				100m		800n		28	N	AD;Eff 11%		PV4e ☑
99	S1020A11PL	.400x.800 in	LD	25m†	560m†				100m		800n		28	N	AD;Eff 11%		PV4q ☑
100	S1020A12	.400x.800 in	LD	25m†	560m†				100m		800n		28	N	AD;Eff 12%		PV4e ☑
101	S1020A12PL	.400x.800 in	LD	25m†	560m†				100m		800n		28	N	AD;Eff 12%		PV4q ☑
102	S1020E6	.400x.800 in	LD	25m†	560m†				100m		800n		28	P	AD;Eff 6%		PV4e ☑
103	S1020E6PL	.400x.800 in	LD	25m†	560m†				100m		800n		28	P	AD;Eff 6%		PV4q ☑
104	S1020E7	.400x.800 in	LD	25m†	560m†				100m		800n		28	P	AD;Eff 7%		PV4e ☑
105	S1020E7PL	.400x.800 in	LD	25m†	560m†				100m		800n		28	P	AD;Eff 7%		PV4q ☑
106	S1020E8	.400x.800 in	LD	25m†	560m†				100m		800n		28	P	AD;Eff 8%		PV4e ☑
107	S1020E8PL	.400x.800 in	LD	25m†	560m†				100m		800n		28	P	AD;Eff 8%		PV4q ☑
108	S1020E9	.400x.800 in	LD	25m†	560m†				100m		800n		28	P	AD;Eff 9%		PV4e ☑
109	S1020E9PL	.400x.800 in	LD	25m†	560m†				100m		800n		28	P	AD;Eff 9%		PV4q ☑
110	S1020E10	.400x.800 in	LD	25m†	560m†				100m		800n		28	P	AD;Eff 10%		PV4e ☑

SYMBOLS AND CODES EXPLAINED IN INTERPRETER

17. PHOTOVOLTAIC CELLS - Light Detector, General Purpose (Cont'd)

IN ORDER OF: (1) TYPE (2) Voc MIN (3) Isc MAX & (4) TYPE NUMBER

LINE No.	4 TYPE NUMBER	ACTIVE SURFACE	1 TYPE CODE	3 MIN. OUTPUT CURRENT Isc (A)	2 MIN. OUTPUT VOLTAGE Voc (V)	MIN. OUTPUT PWR. Po (W)	TEST CONDITIONS Ev FT.C (fc)	Ev LUX (lx)	Ee (W/cm2)	SOURC	PEAK WAVE LENGTH λp (m)	MAX. REV. VOLT VR (V)	TEMP RNG. CODE - +	POLARITY	MATERIAL & FEATURES MAT	LEAD CODE	DRAWING
1	S1020E10PL	.400x.800 in	LD	25m†	560m†				100m		800n		28	P	AD;Eff 10%		PV4q ☑
2	S1020E11	.400x.800 in	LD	25m†	560m†				100m		800n		28	P	AD;Eff 11%		PV4e ☑
3	S1020E11PL	.400x.800 in	LD	25m†	560m†				100m		800n		28	P	AD;Eff 11%		PV4q ☑
4	S1020E12	.400x.800 in	LD	25m†	560m†				100m		800n		28	P	AD;Eff 12%		PV4e ☑
5	S1020E12PL	.400x.800 in	LD	25m†	560m†				100m		800n		28	P	AD;Eff 12%		PV4q ☑
6	S1020GA6	.400x.800 in	LD	25m†	560m†				100m		800n		28	N	AD;Eff 6%		PV4e ☑
7	S1020GA6PL	.400x.800 in	LD	25m†	560m†				100m		800n		28	N	AD;Eff 6%		PV4q ☑
8	S1020GA7	.400x.800 in	LD	25m†	560m†				100m		800n		28	N	AD;Eff 7%		PV4e ☑
9	S1020GA7PL	.400x.800 in	LD	25m†	560m†				100m		800n		28	N	AD;Eff 7%		PV4q ☑
10	S1020GA8	.400x.800 in	LD	25m†	560m†				100m		800n		28	N	AD;Eff 8%		PV4e ☑
11	S1020GA8PL	.400x.800 in	LD	25m†	560m†				100m		800n		28	N	AD;Eff 8%		PV4q ☑
12	S1020GA9	.400x.800 in	LD	25m†	560m†				100m		800n		28	N	AD;Eff 9%		PV4e ☑
13	S1020GA9PL	.400x.800 in	LD	25m†	560m†				100m		800n		28	N	AD;Eff 9%		PV4q ☑
14	S1020GA10	.400x.800 in	LD	25m†	560m†				100m		800n		28	N	AD;Eff 10%		PV4e ☑
15	S1020GA10PL	.400x.800 in	LD	25m†	560m†				100m		800n		28	N	AD;Eff 10%		PV4q ☑
16	S1020GA11	.400x.800 in	LD	25m†	560m†				100m		800n		28	N	AD;Eff 11%		PV4e ☑
17	S1020GA11PL	.400x.800 in	LD	25m†	560m†				100m		800n		28	N	AD;Eff 11%		PV4q ☑
18	S1020GA12	.400x.800 in	LD	25m†	560m†				100m		800n		28	N	AD;Eff 12%		PV4e ☑
19	S1020GA12PL	.400x.800 in	LD	25m†	560m†				100m		800n		28	N	AD;Eff 12%		PV4q ☑
20	S1020GE6	.400x.800 in	LD	25m†	560m†				100m		800n		28	P	AD;Eff 6%		PV4e ☑
21	S1020GE6PL	.400x.800 in	LD	25m†	560m†				100m		800n		28	P	AD;Eff 6%		PV4q ☑
22	S1020GE7	.400x.800 in	LD	25m†	560m†				100m		800n		28	P	AD;Eff 7%		PV4e ☑
23	S1020GE7PL	.400x.800 in	LD	25m†	560m†				100m		800n		28	P	AD;Eff 7%		PV4q ☑
24	S1020GE8	.400x.800 in	LD	25m†	560m†				100m		800n		28	P	AD;Eff 8%		PV4e ☑
25	S1020GE8PL	.400x.800 in	LD	25m†	560m†				100m		800n		28	P	AD;Eff 8%		PV4q ☑
26	S1020GE9	.400x.800 in	LD	25m†	560m†				100m		800n		28	P	AD;Eff 9%		PV4e ☑
27	S1020GE9PL	.400x.800 in	LD	25m†	560m†				100m		800n		28	P	AD;Eff 9%		PV4q ☑
28	S1020GE10	.400x.800 in	LD	25m†	560m†				100m		800n		28	P	AD;Eff 10%		PV4e ☑
29	S1020GE10PL	.400x.800 in	LD	25m†	560m†				100m		800n		28	P	AD;Eff 10%		PV4q ☑
30	S1020GE11	.400x.800 in	LD	25m†	560m†				100m		800n		28	P	AD;Eff 11%		PV4e ☑
31	S1020GE11PL	.400x.800 in	LD	25m†	560m†				100m		800n		28	P	AD;Eff 11%		PV4q ☑
32	S1020GE12	.400x.800 in	LD	25m†	560m†				100m		800n		28	P	AD;Eff 12%		PV4e ☑
33	S1020GE12PL	.400x.800 in	LD	25m†	560m†				100m		800n		28	P	AD;Eff 12%		PV4q ☑
34	S2005A6	.800x.200 in	LD	25m†	560m†				100m		800n		28	N	AD;Eff 6%		PV4f ☑
35	S2005A6PL	.800x.200 in	LD	25m†	560m†				100m		800n		28	N	AD;Eff 6%		PV4r ☑
36	S2005A7	.800x.200 in	LD	25m†	560m†				100m		800n		28	N	AD;Eff 7%		PV4f ☑
37	S2005A7PL	.800x.200 in	LD	25m†	560m†				100m		800n		28	N	AD;Eff 7%		PV4r ☑
38	S2005A8	.800x.200 in	LD	25m†	560m†				100m		800n		28	N	AD;Eff 8%		PV4f ☑
39	S2005A8PL	.800x.200 in	LD	25m†	560m†				100m		800n		28	N	AD;Eff 8%		PV4r ☑
40	S2005A9	.800x.200 in	LD	25m†	560m†				100m		800n		28	N	AD;Eff 9%		PV4f ☑
41	S2005A9PL	.800x.200 in	LD	25m†	560m†				100m		800n		28	N	AD;Eff 9%		PV4r ☑
42	S2005A10	.800x.200 in	LD	25m†	560m†				100m		800n		28	N	AD;Eff 10%		PV4f ☑
43	S2005A10PL	.800x.200 in	LD	25m†	560m†				100m		800n		28	N	AD;Eff 10%		PV4r ☑
44	S2005A11	.800x.200 in	LD	25m†	560m†				100m		800n		28	N	AD;Eff 11%		PV4f ☑
45	S2005A11PL	.800x.200 in	LD	25m†	560m†				100m		800n		28	N	AD;Eff 11%		PV4r ☑
46	S2005A12	.800x.200 in	LD	25m†	560m†				100m		800n		28	N	AD;Eff 12%		PV4f ☑
47	S2005A12PL	.800x.200 in	LD	25m†	560m†				100m		800n		28	N	AD;Eff 12%		PV4r ☑
48	S2005E6	.800x.200 in	LD	25m†	560m†				100m		800n		28	P	AD;Eff 6%		PV4f ☑
49	S2005E6PL	.800x.200 in	LD	25m†	560m†				100m		800n		28	P	AD;Eff 6%		PV4r ☑
50	S2005E7	.800x.200 in	LD	25m†	560m†				100m		800n		28	P	AD;Eff 7%		PV4f ☑
51	S2005E7PL	.800x.200 in	LD	25m†	560m†				100m		800n		28	P	AD;Eff 7%		PV4r ☑
52	S2005E8	.800x.200 in	LD	25m†	560m†				100m		800n		28	P	AD;Eff 8%		PV4f ☑
53	S2005E8PL	.800x.200 in	LD	25m†	560m†				100m		800n		28	P	AD;Eff 8%		PV4r ☑
54	S2005E9	.800x.200 in	LD	25m†	560m†				100m		800n		28	P	AD;Eff 9%		PV4f ☑
55	S2005E9PL	.800x.200 in	LD	25m†	560m†				100m		800n		28	P	AD;Eff 9%		PV4r ☑
56	S2005E10	.800x.200 in	LD	25m†	560m†				100m		800n		28	P	AD;Eff 10%		PV4f ☑
57	S2005E10PL	.800x.200 in	LD	25m†	560m†				100m		800n		28	P	AD;Eff 10%		PV4r ☑
58	S2005E11	.800x.200 in	LD	25m†	560m†				100m		800n		28	P	AD;Eff 11%		PV4f ☑
59	S2005E11PL	.800x.200 in	LD	25m†	560m†				100m		800n		28	P	AD;Eff 11%		PV4r ☑
60	S2005E12	.800x.200 in	LD	25m†	560m†				100m		800n		28	P	AD;Eff 12%		PV4f ☑
61	S2005E12PL	.800x.200 in	LD	25m†	560m†				100m		800n		28	P	AD;Eff 12%		PV4r ☑
62	S2005GA6	.800x.200 in	LD	25m†	560m†				100m		800n		28	N	AD;EFF 6%		PV4f ☑
63	S2005GA6PL	.800x.200 in	LD	25m†	560m†				100m		800n		28	N	AD;Eff 6%		PV4r ☑
64	S2005GA7	.800x.200 in	LD	25m†	560m†				100m		800n		28	N	AD;Eff 7%		PV4f ☑
65	S2005GA7PL	.800x.200 in	LD	25m†	560m†				100m		800n		28	N	AD;Eff 7%		PV4r ☑
66	S2005GA8	.800x.200 in	LD	25m†	560m†				100m		800n		28	N	AD;Eff 8%		PV4f ☑
67	S2005GA8PL	.800x.200 in	LD	25m†	560m†				100m		800n		28	N	AD;Eff 8%		PV4r ☑
68	S2005GA9	.800x.200 in	LD	25m†	560m†				100m		800n		28	N	AD;Eff 9%		PV4f ☑
69	S2005GA9PL	.800x.200 in	LD	25m†	560m†				100m		800n		28	N	AD;Eff 9%		PV4r ☑
70	S2005GA10	.800x.200 in	LD	25m†	560m†				100m		800n		28	N	AD;Eff 10%		PV4f ☑
71	S2005GA10PL	.800x.200in	LD	25m†	560m†				100m		800n		28	N	AD;Eff 10%		PV4r ☑
72	S2005GA11	.800x.200 in	LD	25m†	560m†				100m		800n		28	N	AD;Eff 11%		PV4f ☑
73	S2005GA11PL	.800x.200in	LD	25m†	560m†				100m		800n		28	N	AD;Eff 11%		PV4r ☑
74	S2005GA12	.800x.200 in	LD	25m†	560m†				100m		800n		28	N	AD;Eff 12%		PV4f ☑
75	S2005GA12PL	.800x.200in	LD	25m†	560m†				100m		800n		28	N	AD;Eff 12%		PV4r ☑
76	S2005GE6	.800x.200 in	LD	25m†	560m†				100m		800n		28	P	AD;Eff 6%		PV4f ☑
77	S2005GE6PL	.800x.200 in	LD	25m†	560m†				100m		800n		28	P	AD;Eff 6%		PV4r ☑
78	S2005GE7	.800x.200 in	LD	25m†	560m†				100m		800n		28	P	AD;Eff 7%		PV4f ☑
79	S2005GE7PL	.800x.200 in	LD	25m†	560m†				100m		800n		28	P	AD;Eff 7%		PV4r ☑
80	S2005GE8	.800x.200 in	LD	25m†	560m†				100m		800n		28	P	AD;Eff 8%		PV4f ☑
81	S2005GE8PL	.800x.200 in	LD	25m†	560m†				100m		800n		28	P	AD;Eff 8%		PV4r ☑
82	S2005GE9	.800x.200 in	LD	25m†	560m†				100m		800n		28	P	AD;Eff 9%		PV4f ☑
83	S2005GE9PL	.800x.200 in	LD	25m†	560m†				100m		800n		28	P	AD;Eff 9%		PV4r ☑
84	S2005GE10	.800x.200 in	LD	25m†	560m†				100m		800n		28	P	AD;Eff 10%		PV4f ☑
85	S2005GE10PL	.800x.200 in	LD	25m†	560m†				100m		800n		28	P	AD;Eff 10%		PV4r ☑
86	S2005GE11	.800x.200 in	LD	25m†	560m†				100m		800n		28	P	AD;Eff 11%		PV4f ☑
87	S2005GE11PL	.800x.200 in	LD	25m†	560m†				100m		800n		28	P	AD;Eff 11%		PV4r ☑
88	S2005GE12	.800x.200 in	LD	25m†	560m†				100m		800n		28	P	AD;Eff 12%		PV4f ☑
89	S2005GE12PL	.800x.200 in	LD	25m†	560m†				100m		800n		28	P	AD;Eff 12%		PV4r ☑
90	S2010A6	.800x.400 in	LD	25m†	560m†				100m		800n		28	N	AD;Eff 6%		PV4g ☑
91	S2010A6PL	.800x.400 in	LD	25m†	560m†				100m		800n		28	N	AD;Eff 6%		PV4s ☑
92	S2010A7	.800x.400 in	LD	25m†	560m†				100m		800n		28	N	AD;Eff 7%		PV4g ☑
93	S2010A7PL	.800x.400 in	LD	25m†	560m†				100m		800n		28	N	AD;Eff 7%		PV4s ☑
94	S2010A8	.800x.400 in	LD	25m†	560m†				100m		800n		28	N	AD;Eff 8%		PV4g ☑
95	S2010A8PL	.800x.400 in	LD	25m†	560m†				100m		800n		28	N	AD;Eff 8%		PV4s ☑
96	S2010A9	.800x.400 in	LD	25m†	560m†				100m		800n		28	N	AD;Eff 9%		PV4g ☑
97	S2010A9PL	.800x.400 in	LD	25m†	560m†				100m		800n		28	N	AD;Eff 9%		PV4s ☑
98	S2010A10	.800x.400 in	LD	25m†	560m†				100m		800n		28	N	AD;Eff 10%		PV4g ☑
99	S2010A10PL	.800x.400 in	LD	25m†	560m†				100m		800n		28	N	AD;Eff 10%		PV4s ☑
100	S2010A11	.800x.400 in	LD	25m†	560m†				100m		800n		28	N	AD;Eff 11%		PV4g ☑
101	S2010A11PL	.800x.400 in	LD	25m†	560m†				100m		800n		28	N	AD;Eff 11%		PV4s ☑
102	S2010A12	.800x.400 in	LD	25m†	560m†				100m		800n		28	N	AD;Eff 12%		PV4g ☑
103	S2010A12PL	.800x.400 in	LD	25m†	560m†				100m		800n		28	N	AD;Eff 12%		PV4s ☑
104	S2010E6	.800x.400 in	LD	25m†	560m†				100m		800n		28	P	AD;Eff 6%		PV4g ☑
105	S2010E6PL	.800x.400 in	LD	25m†	560m†				100m		800n		28	P	AD;Eff 6%		PV4s ☑
106	S2010E7	.800x.400 in	LD	25m†	560m†				100m		800n		28	P	AD;Eff 7%		PV4g ☑
107	S2010E7PL	.800x.400 in	LD	25m†	560m†				100m		800n		28	P	AD;Eff 7%		PV4s ☑
108	S2010E8	.800x.400 in	LD	25m†	560m†				100m		800n		28	P	AD;Eff 8%		PV4g ☑
109	S2010E8PL	.800x.400 in	LD	25m†	560m†				100m		800n		28	P	AD;Eff 8%		PV4s ☑
110	S2010E9	.800x.400 in	LD	25m†	560m†				100m		800n		28	P	AD;Eff 9%		PV4g ☑

SYMBOLS AND CODES EXPLAINED IN INTERPRETER

17. PHOTOVOLTAIC CELLS - Light Detector, General-Purpose (Cont'd)

IN ORDER OF: (1) TYPE (2) Voc MIN (3) Isc MAX & (4) TYPE NUMBER

LINE No.	4 TYPE NUMBER	ACTIVE SURFACE	1 TYPE CODE	3 MIN. OUTPUT CURRENT Isc (A)	2 MIN. OUTPUT VOLTAGE Voc (V)	MIN. OUTPUT PWR. Po (W)	TEST CONDITIONS Ev FT.C (fc)	Ev LUX (lx)	Ee (W/cm2)	SOURC	PEAK WAVE LENGTH λp (m)	MAX. REV. VOLT VR (V)	TEMP RNG. CODE -	+	POLARITY	MATERIAL & FEATURES MAT	LEAD CODE	DRAWING
1	S2010E9PL	.800x.400 in	LD	25m†	560m†				100m		800n		28		P	AD;Eff 9%		PV4s ☑
2	S2010E10	.800x.400 in	LD	25m†	560m†				100m		800n		28		P	AD;Eff 10%		PV4g ☑
3	S2010E10PL	.800x.400 in	LD	25m†	560m†				100m		800n		28		P	AD;Eff 10%		PV4s ☑
4	S2010E11	.800x.400 in	LD	25m†	560m†				100m		800n		28		P	AD;Eff 11%		PV4g ☑
5	S2010E11PL	.800x.400 in	LD	25m†	560m†				100m		800n		28		P	AD;Eff 11%		PV4s ☑
6	S2010E12	.800x.400 in	LD	25m†	560m†				100m		800n		28		P	AD;Eff 12%		PV4g ☑
7	S2010E12PL	.800x.400 in	LD	25m†	560m†				100m		800n		28		P	AD;Eff 12%		PV4s ☑
8	S2010GA6	.800x.400 in	LD	25m†	560m†				100m		800n		28			AD;Eff 6%		PV4g ☑
9	S2010GA6PL	.800x.400 in	LD	25m†	560m†				100m		800n		28		N	AD;Eff 6%		PV4s ☑
10	S2010GA7	.800x.400 in	LD	25m†	560m†				100m		800n		28			AD;Eff 7%		PV4g ☑
11	S2010GA7PL	.800x.400 in	LD	25m†	560m†				100m		800n		28		N	AD;Eff 7%		PV4s ☑
12	S2010GA8	.800x.400 in	LD	25m†	560m†				100m		800n		28			AD;Eff 8%		PV4g ☑
13	S2010GA8PL	.800x.400 in	LD	25m†	560m†				100m		800n		28		N	AD;Eff 8%		PV4s ☑
14	S2010GA9	.800x.400 in	LD	25m†	560m†				100m		800n		28			AD;Eff 9%		PV4g ☑
15	S2010GA9PL	.800x.400 in	LD	25m†	560m†				100m		800n		28		N	AD;Eff 9%		PV4s ☑
16	S2010GA10	.800x.400 in	LD	25m†	560m†				100m		800n		28			AD;Eff 10%		PV4g ☑
17	S2010GA10PL	.800x.400 in	LD	25m†	560m†				100m		800n		28		N	AD;Eff 10%		PV4s ☑
18	S2010GA11	.800x.400 in	LD	25m†	560m†				100m		800n		28			AD;Eff 11%		PV4g ☑
19	S2010GA11PL	.800x.400 in	LD	25m†	560m†				100m		800n		28		N	AD;Eff 11%		PV4s ☑
20	S2010GA12	.800x.400 in	LD	25m†	560m†				100m		800n		28			AD;Eff 12%		PV4g ☑
21	S2010GA12PL	.800x.400 in	LD	25m†	560m†				100m		800n		28		N	AD;Eff 12%		PV4s ☑
22	S2010GE6	.800x.400 in	LD	25m†	560m†				100m		800n		28		P	AD;Eff 6%		PV4g ☑
23	S2010GE6PL	.800x.400 in	LD	25m†	560m†				100m		800n		28		P	AD;Eff 6%		PV4s ☑
24	S2010GE7	.800x.400 in	LD	25m†	560m†				100m		800n		28		P	AD;Eff 7%		PV4g ☑
25	S2010GE7PL	.800x.400 in	LD	25m†	560m†				100m		800n		28		P	AD;Eff 7%		PV4s ☑
26	S2010GE8	.800x.400 in	LD	25m†	560m†				100m		800n		28		P	AD;Eff 8%		PV4g ☑
27	S2010GE8PL	.800x.400 in	LD	25m†	560m†				100m		800n		28		P	AD;Eff 8%		PV4s ☑
28	S2010GE9	.800x.400 in	LD	25m†	560m†				100m		800n		28		P	AD;Eff 9%		PV4g ☑
29	S2010GE9PL	.800x.400 in	LD	25m†	560m†				100m		800n		28		P	AD;Eff 9%		PV4s ☑
30	S2010GE10	.800x.400 in	LD	25m†	560m†				100m		800n		28		P	AD;Eff 10%		PV4g ☑
31	S2010GE10PL	.800x.400 in	LD	25m†	560m†				100m		800n		28		P	AD;Eff 10%		PV4s ☑
32	S2010GE11	.800x.400 in	LD	25m†	560m†				100m		800n		28		P	AD;Eff 11%		PV4g ☑
33	S2010GE11PL	.800x.400 in	LD	25m†	560m†				100m		800n		28		P	AD;Eff 11%		PV4s ☑
34	S2010GE12	.800x.400 in	LD	25m†	560m†				100m		800n		28		P	AD;Eff 12%		PV4g ☑
35	S2010GE12PL	.800x.400 in	LD	25m†	560m†				100m		800n		28		P	AD;Eff 12%		PV4s ☑
36	S2020A6	.800x.800 in	LD	25m†	560m†				100m		800n		28		N	AD;Eff 6%		PV4h ☑
37	S2020A6PL	.800x.800 in	LD	25m†	560m†				100m		800n		28		N	AD;Eff 6%		PV4t ☑
38	S2020A7	.800x.800 in	LD	25m†	560m†				100m		800n		28		N	AD;Eff 7%		PV4h ☑
39	S2020A7PL	.800x.800 in	LD	25m†	560m†				100m		800n		28		N	AD;Eff 7%		PV4t ☑
40	S2020A8	.800x.800 in	LD	25m†	560m†				100m		800n		28		N	AD;Eff 8%		PV4h ☑
41	S2020A8PL	.800x.800 in	LD	25m†	560m†				100m		800n		28		N	AD;Eff 8%		PV4t ☑
42	S2020A9	.800x.800 in	LD	25m†	560m†				100m		800n		28		N	AD;Eff 9%		PV4h ☑
43	S2020A9PL	.800x.800 in	LD	25m†	560m†				100m		800n		28		N	AD;Eff 9%		PV4t ☑
44	S2020A10	.800x.800 in	LD	25m†	560m†				100m		800n		28		N	AD;Eff 10%		PV4h ☑
45	S2020A10PL	.800x.800 in	LD	25m†	560m†				100m		800n		28		N	AD;Eff 10%		PV4t ☑
46	S2020A11	.800x.800 in	LD	25m†	560m†				100m		800n		28		N	AD;Eff 11%		PV4h ☑
47	S2020A11PL	.800x.800 in	LD	25m†	560m†				100m		800n		28		N	AD;Eff 11%		PV4t ☑
48	S2020A12	.800x.800 in	LD	25m†	560m†				100m		800n		28		N	AD;Eff 12%		PV4h ☑
49	S2020A12PL	.800x.800 in	LD	25m†	560m†				100m		800n		28		N	AD;Eff 12%		PV4t ☑
50	S2020E6	.800x.800 in	LD	25m†	560m†				100m		800n		28		P	AD;Eff 6%		PV4h ☑
51	S2020E6PL	.800x.800 in	LD	25m†	560m†				100m		800n		28		P	AD;Eff 6%		PV4t ☑
52	S2020E7	.800x.800 in	LD	25m†	560m†				100m		800n		28		P	AD;Eff 7%		PV4h ☑
53	S2020E7PL	.800x.800 in	LD	25m†	560m†				100m		800n		28		P	AD;Eff 7%		PV4t ☑
54	S2020E8	.800x.800 in	LD	25m†	560m†				100m		800n		28		P	AD;Eff 8%		PV4h ☑
55	S2020E8PL	.800x.800 in	LD	25m†	560m†				100m		800n		28		P	AD;Eff 8%		PV4t ☑
56	S2020E9	.800x.800 in	LD	25m†	560m†				100m		800n		28		P	AD;Eff 9%		PV4h ☑
57	S2020E9PL	.800x.800 in	LD	25m†	560m†				100m		800n		28		P	AD;Eff 9%		PV4t ☑
58	S2020E10	.800x.800 in	LD	25m†	560m†				100m		800n		28		P	AD;Eff 10%		PV4h ☑
59	S2020E10PL	.800x.800 in	LD	25m†	560m†				100m		800n		28		P	AD;Eff 10%		PV4t ☑
60	S2020E11	.800x.800 in	LD	25m†	560m†				100m		800n		28		P	AD;Eff 11%		PV4h ☑
61	S2020E11PL	.800x.800 in	LD	25m†	560m†				100m		800n		28		P	AD;Eff 11%		PV4t ☑
62	S2020E12	.800x.800 in	LD	25m†	560m†				100m		800n		28		P	AD;Eff 12%		PV4h ☑
63	S2020E12PL	.800x.800 in	LD	25m†	560m†				100m		800n		28		P	AD;Eff 12%		PV4t ☑
64	S2020GA6	.800x.800 in	LD	25m†	560m†				100m		800n		28		N	AD;Eff 6%		PV4h ☑
65	S2020GA6PL	.800x.800 in	LD	25m†	560m†				100m		800n		28		N	AD;Eff 6%		PV4t ☑
66	S2020GA7	.800x.800 in	LD	25m†	560m†				100m		800n		28		N	AD;Eff 7%		PV4h ☑
67	S2020GA7PL	.800x.800 in	LD	25m†	560m†				100m		800n		28		N	AD;Eff 7%		PV4t ☑
68	S2020GA8	.800x.800 in	LD	25m†	560m†				100m		800n		28		N	AD;Eff 8%		PV4h ☑
69	S2020GA8PL	.800x.800 in	LD	25m†	560m†				100m		800n		28		N	AD;Eff 8%		PV4t ☑
70	S2020GA9	.800x.800 in	LD	25m†	560m†				100m		800n		28		N	AD;Eff 9%		PV4h ☑
71	S2020GA9PL	.800x.800 in	LD	25m†	560m†				100m		800n		28		N	AD;Eff 9%		PV4t ☑
72	S2020GA10	.800x.800 in	LD	25m†	560m†				100m		800n		28		N	AD;Eff 10%		PV4h ☑
73	S2020GA10PL	.800x.800 in	LD	25m†	560m†				100m		800n		28		N	AD;Eff 10%		PV4t ☑
74	S2020GA11	.800x.800 in	LD	25m†	560m†				100m		800n		28		N	AD;Eff 11%		PV4h ☑
75	S2020GA11PL	.800x.800 in	LD	25m†	560m†				100m		800n		28		N	AD;Eff 11%		PV4t ☑
76	S2020GA12	.800x.800 in	LD	25m†	560m†				100m		800n		28		N	AD;Eff 12%		PV4h ☑
77	S2020GA12PL	.800x.800 in	LD	25m†	560m†				100m		800n		28		N	AD;Eff 12%		PV4t ☑
78	S2020GE6	.800x.800 in	LD	25m†	560m†				100m		800n		28		P	AD;Eff 6%		PV4h ☑
79	S2020GE6PL	.800x.800 in	LD	25m†	560m†				100m		800n		28		P	AD;Eff 6%		PV4t ☑
80	S2020GE7	.800x.800 in	LD	25m†	560m†				100m		800n		28		P	AD;Eff 7%		PV4h ☑
81	S2020GE7PL	.800x.800 in	LD	25m†	560m†				100m		800n		28		P	AD;Eff 7%		PV4t ☑
82	S2020GE8	.800x.800 in	LD	25m†	560m†				100m		800n		28		P	AD;Eff 8%		PV4h ☑
83	S2020GE8PL	.800x.800 in	LD	25m†	560m†				100m		800n		28		P	AD;Eff 8%		PV4t ☑
84	S2020GE9	.800x.800 in	LD	25m†	560m†				100m		800n		28		P	AD;Eff 9%		PV4h ☑
85	S2020GE9PL	.800x.800 in	LD	25m†	560m†				100m		800n		28		P	AD;Eff 9%		PV4t ☑
86	S2020GE10	.800x.800 in	LD	25m†	560m†				100m		800n		28		P	AD;Eff 10%		PV4h ☑
87	S2020GE10PL	.800x.800 in	LD	25m†	560m†				100m		800n		28		P	AD;Eff 10%		PV4t ☑
88	S2020GE11	.800x.800 in	LD	25m†	560m†				100m		800n		28		P	AD;Eff 11%		PV4h ☑
89	S2020GE11PL	.800x.800 in	LD	25m†	560m†				100m		800n		28		P	AD;Eff 11%		PV4t ☑
90	S2020GE12	.800x.800 in	LD	25m†	560m†				100m		800n		28		P	AD;Eff 12%		PV4h ☑
91	S2020GE12PL	.800x.800 in	LD	25m†	560m†				100m		800n		28		P	AD;Eff 12%		PV4t ☑

SOLAR CELL

95	B4(3)	.543 sq in	SC	30u			10				565n				AC		PV51a ☑
96	A3(2)	1.09 in dia	SC	50u			10				565n				AC		PV5h ☑
97	B2(3)	1.06 sq in	SC	55u			10				565n				AC		PV51 ☑
98	A1(1)	2.46 in dia	SC	90u			10				565n				AC		PV5g ☑
99	B5(2)	1.66 sq in	SC	90u			10				565n				AC		PV51b ☑
100	NSL5978	17.5x12.3 in	SC	680u†	19.5m	9.0			100m						ADModule		PV201 ☑
101	NSL5925	40.2x15.8 in	SC	2.2u†	20.5m	32			100m						ADModule		PV203 ☑
102	NSL6122	0.026sq cm	SC	130u†	350m	45.5u	500		25m	E		10	6C	N	ADPVcell		PV200 ☑
103	BPW35	.145 in sq	SC	300n	380m						750n	1.0	4A			A	PV50 ☑
104	NSL6135	0.052sq cm	SC	200u†	380m	76.0u	500		25m	E		10	6C	N	ADPVcell		PV199 ☑
105	NSL6136	0.026sq cm	SC	115u†	400m	46.0u	500		25m	E		5.0	6C	N	ADPVcell		PV200 ☑
106	SS300-1	.240 in dia	SC	1.1m	400m		1.0k			H	800n		6H		AD	A	PV57 ☑
107	SS300-2	.240 in dia	SC	1.1m	400m		1.0k			H	800n		6H		AD	E	PV58 ☑
108	SS300-3	.240 in dia	SC	1.1m	400m		1.0k			H	800n		6H		AD	E	PV57 ☑
109	SS300-4	.240 in dia	SC	1.1m	400m		1.0k			H	800n		6H		AD	E	PV58 ☑
110	SS23	.0155 sq in	SC	1.5m	400m	600u			100m	F	800n		6H	P	AD		PV1bg ☑

17. PHOTOVOLTAIC CELLS - Solar Cell (Cont'd)

IN ORDER OF: (1) TYPE (2) Voc MIN (3) Isc MAX & (4) TYPE NUMBER

LINE No.	4 TYPE NUMBER	ACTIVE SURFACE	1 TYPE CODE	3 MIN. OUTPUT CURRENT Isc (A)	2 MIN. OUTPUT VOLTAGE Voc (V)	MIN. OUTPUT PWR. Pc (W)	TEST CONDITIONS Ev FT.C (fc)	Ev LUX (lx)	Ee (W/cm2)	SOURCE	PEAK WAVE LENGTH λp (m)	MAX. REV. VOLT VR (V)	TEMP RNG. CODE - +	POLARITY	MATERIAL & FEATURES MAT	LEAD CODE	DRAWING
1	VTS2011	.013 sq in	SC	1.7m	400m†	680u			100m	C			5C	P	AD		PV1r ☑
2	VTS3011	.013 sq in	SC	1.7m	400m†	680u			100m	C			5C	P	AD		PV1z ☑
3	ST203	.015 sq in	SC	1.8m†	400m†	7.2m†				F			6H	P	AD		None ☑
4	VTS2012	.016 sq in	SC	2.0m	400m†	800u			100m	C			5C	P	AD		PV1s ☑
5	VTS3012	.016 sq in	SC	2.0m	400m†	800u			100m	C			5C	P	AD		PV1aa ☑
6	SS22	.031 sq in	SC	3.0m	400m	1.2m			100m	F	800n		6H	P	AD		PV1bf ☑
7	ST202	.031 sq in	SC	3.8m†	400m†	1.5m†				F			6H	P	AD		None ☑
8	VTS2013	.032 sq in	SC	4.2m	400m†	1.6m			100m	C			5C	P	AD		PV1t ☑
9	VTS3013	.032 sq in	SC	4.2m	400m†	1.6m			100m	C			5C	P	AD		PV1ab ☑
10	SS21	.062 sq in	SC	6.0m	400m	2.4m			100m	F	800n		6H	P	AD		PV1be ☑
11	SS12	.069 sq in	SC	7.0m	400m	2.8m			100m	F	800n		6H	P	AD		PV1bc ☑
12	ST102	.069 sq in	SC	7.5m†	400m†	3.0m†				F			6H	P	AD		None ☑
13	ST201	.062 sq in	SC	7.5m†	400m†	3.0m†				F			6H	P	AD		None ☑
14	VTS2014	.065 sq in	SC	8.4m	400m†	3.36m			100m	C			5C	P	AD		PV1u ☑
15	VTS3014	.065 sq in	SC	8.4m	400m†	3.36m			100m	C			5C	P	AD		PV1ac ☑
16	SS20	.124 sq in	SC	12m	400m	4.8m			100m	F	800n		6H	P	AD		PV1bd ☑
17	SS11	.1395 sq in	SC	14m	400m	5.6m			100m	F	800n		6H	P	AD		PV1bb ☑
18	SS50	.155 sq in	SC	15m	400m	6.0m			100m	F	800n		6H	P	AD		PV1bj ☑
19	SS100	1.00x1.00	SC	15m	400m	6.0m			100m		800n				XX	A	PV53 ☑
20	ST200	.124 sq in	SC	15m†	400m†	6.0m†				F			6H	P	AD		None ☑
21	ST500	.155 sq in	SC	15m†	400m†	6.0m				F			6H	P	AD		None ☑
22	ST101	.139 sq in	SC	17m†	400m†	6.8m†				F			6H	P	AD		None ☑
23	VTS2018	.130 sq in	SC	17m	400m†	6.8m			100m	C			5C	P	AD		PV1v ☑
24	VTS3018	.130 sq in	SC	17m	400m†	6.8m			100m	C			5C	P	AD		PV1ad ☑
25	SS31	.2232 sq in	SC	18m	400m	7.2m			100m	F	800n		6H	P	AD		PV60 Ø
26	VTS2020	.140 sq in	SC	18m	400m†	7.2m			100m	C			5C	P	AD		PV1w ☑
27	VTS3020	.140 sq in	SC	18m	400m†	7.2m			100m	C			5C	P	AD		PV1ae ☑
28	ST301	.186 Sq In	SC	20m†	400m†	8.0m†				F			6H	P	AD		None
29	SS10	.279 sq in	SC	28m	400m	11.2m			100m	F	800n		6H	P	AD		PV1ba ☑
30	ST100	.279 sq in	SC	35m†	400m†	14m†				F			6H	P	AD		None ☑
31	VTS2024	.290 sq in	SC	38m	400m†	15.2m			100m	C			5C	P	AD		PV1x ☑
32	VTS3024	.290 sq in	SC	38m	400m†	15.2m			100m	C			5C	P	AD		PV1af ☑
33	S2900E5M	1.25 in Dia	SC	60m	400m	24m			100m		800n		28		AD		PV3 Ø
34	SS40	.589 sq in	SC	60m	400m	24m			100m	F	800n		6H	P	AD		PV1bh ☑
35	SS200A	1.312india	SC	60m	400m	24m			100m		800n		6H		AD	A	PV54 Ø
36	SS30	.744 sq in	SC	75m	400m	30m			100m	F	800n		6H	P	AD		PV5f Ø
37	VTS2028	.610 sq in	SC	79m	400m†	31.6m			100m	C			5C	P	AD		PV1y ☑
38	VTS3028	.610 sq in	SC	79m	400m†	31.6m			100m	C			5C	P	AD		PV1ag ☑
39	ST400	.589 sq in	SC	80m†	400m†	32m†				F			6H	P	AD		None ☑
40	S2900E7M	1.25 in Dia	SC	90m	400m	36m			100m		800n		28		AD		PV3 Ø
41	SS200B	1.312india	SC	90m	400m	36m			100m		800n		6H		AD	A	PV54 Ø
42	ST300	.744 Sq In	SC	90m†	400m†	36m†				F			6H	P	AD		None Ø
43	VTS2050	.850 sq in	SC	110m	400m†	44m			100m	C			5C	P	AD		PV5e Ø
44	VTS3050	.850 sq in	SC	110m	400m†	44m			100m	C			5C	P	AD		PV5e Ø
45	S2900E9.5M	1.25 in Dia	SC	120m	400m	48m			100m		800n		28		AD		PV3 Ø
46	SS200C	1.312india	SC	120m	400m	48m			100m		800n		6H		AD	A	PV54 Ø
47	SS200D	1.312india	SC	150m	400m	60m			100m		800n		6H		AD	A	PV54 Ø
48	SS35	17.3 sqcm	SC	300m	400m	120m			100m	F		10	6H	N	XX		None
49	NSL6134	0.052sq cm	SC	180u†	420m	75.0u	500		25m	E		5.0	6C	N	ADPVcell		PV199 ☑
50	VTS2022	.140 sq in	SC	21m	430m†	9.03m			100m	C			5C	P	AD		PV1w ☑
51	VTS3022	.140 sq in	SC	21m	430m†	9.03m			100m	C			5C	P	AD		PV1ae ☑
52	VTS2026	.290 sq in	SC	44m	430m†	18.9m			100m	C			5C	P	AD		PV1x ☑
53	VTS3026	.290 sq in	SC	44m	430m†	18.9m			100m	C			5C	P	AD		PV1af ☑
54	ST400G	.589 sq in	SC	80m†	430m†	32m†				F			6H	P	AD		None
55	SS2020G	.5673 sq in	SC	125m	430m†	55.9m†			140m		760n		X2♦	N	AD		PV86 ☑
56	60-1046	1.76 Sq in	SC	250m	460m	115m			100m				49	N	Eff 10%		PV149
57	60-1045	3.53 Sq in	SC	500m	460m	230m			100m				49	N	Eff 10%		PV150
58	MS11A	23.4mmdia	SC	48m†	500m†		3.0k			C	850n		5C		AD	A	PV41 Ø
59	MS11AE	23.4mmdia	SC	54m†	500m†		3.0k			C	850n		58		AD		PV42 Ø
60	60-1069	7.06 Sq in	SC	1.3 †	500m†	650m			100m				49	N	Eff 13%		PV151
61	MS11B	23.4mmdia	SC	54m†	550m†		3.0k			C	850n		5C		AD	A	PV41 Ø
62	MS11BE	23.4mmdia	SC	60m†	550m†		3.0k			C	850n		58		AD		PV42 Ø
63	SSW3/6N	23 sq Cm	SC	170m†	570m†	70m†				S			17		ADSOLAR		PV185
64	SSW3/4N	35 sq Cm	SC	250m†	570m†	100m†				S			17		ADSOLAR		PV184
65	SSW3/2N	71 sq Cm	SC	500m†	570m†	210m†				S			17		ADSOLAR		PV183
66	SSW3N	76mm dia	SC	990m†	570m†	420m†				S			17		ADSOLAR		PV182 Ø
67	SSC5L1	306 sq mm	SC	4.0u†	1.5			100		S			26		ADSOLAR		PV186
68	SSC5L2	412 sq mm	SC	4.0u†	1.6 †			70		S			26		ADSOLAR		PV187
69	SP2A40B	1.55x1.55 in	SC	36m	1.6	58m			100m		800n		28		AD		PV9 ☑
70	SP2B48B	1.55x1.55 in	SC	40m	1.6	64m			100m		800n		28		AD		PV9 ☑
71	SP2C80B	1.60x.75 in	SC	72m	1.6	115m			100m		800n		28		AD		PV2 ☑
72	SP2D96B	1.60x.75 in	SC	80m	1.6	128m			100m		800n		28		AD		PV2 ☑
73	SSC4-923		SC	320u	1.8			1.0k					2C		XX		None
74	SSC5-4811	283 sq mm	SC	7.4u†	1.9 †			200		S			29		ADSOLAR		PV189
75	SSC5-8665	300 sq mm	SC	8.7u†	1.9 †			200		S			29		ADSOLAR		PV190
76	SSC5-4515	344 sq mm	SC	11.8u†	1.9 †			200		S			29		ADSOLAR		PV188
77	SSCD8-85LH		SC	45m†	2.3 †	80.0m†			100m	S			17	P	AD		None
78	SSC8-85L		SC	12.0u	2.5			200					17	P	AD		PV167
79	SSC8-1010	90.2mm	SC	13.5u†	2.5								17	P	AD		PV166
80	SSC9-5815	76.7mm	SC	27u	2.8								2A		XX		PV165
81	SP4C40B	1.60x.75 in	SC	36m	3.2	115m			100m		800n		28		AD		PV2 ☑
82	SP4D48B	1.60x.75 in	SC	40m	3.2	128m			100m		800n		28		AD		PV2 ☑
83	SSC9-4515	703 sq mm	SC	10.7u†	3.4 †			200		S			19		ADSOLAR		PV191
84	SSC8-85LH		SC	23m†	4.5 †	80.6m†			100m	S			17	P	AD		None
85	SSB4-210S		SC	130m†	5.6 †	500m†			100m	S			2A	P	ADSOLAR		PV196
86	SSB-D4-210		SC	130m†	5.6 †	500m†			100m	S			2A	P	ADSOLAR		PV197
87	60-3039-4	254.4 Sq in	SC	3.9	6.0	23.4			100m		935n		49	N	Eff 13%		PV158
88	SSB4-160		SC	120m†	6.5 †	600m†			100m	S			2A	P	ADSOLAR		PV193
89	BPX47B18	219 Sq in	SC	2.01	8.2	16.5			100m				06		AD		PV160
90	60-3014	127.2 Sq in	SC	1.0	8.25				100m		935n		49	N	Eff 13%		PV155
91	60-3013	63.6 Sq in	SC	557m	8.75				100m		935n		49	N	Eff 10%		PV154
92	60-3039-6	254.4 Sq in	SC	2.6	9.0	23.4			100m		935n		49	N	Eff 13%		PV158
93	SSB6-210		SC	170m†	9.1 †	1.2 †			100m	S			2A	P	ADSOLAR		PV192
94	BPX47B20	243 Sq in	SC	2.01	9.1	18.3			100m				06		AD		PV161
95	SSB6-280L		SC	920m†	9.5 †	7.2 †			100m	S			2A	P	ADSOLAR		PV194
96	60-3012	35.3 Sq in	SC	280m	9.8				100m		935n		49	N	Eff 10%		PV153
97	60-3040-12	848.2 Sq in	SC	5.6	15	84			100m		935n		49	N	Eff 13%		PV152
98	60-3053-12	47.24 sq in	SC	5.0	16	80			100m				24		XX		PV152
99	60-3015	63.6 Sq in	SC	280m	17.5				100m		935n		49	N	Eff 10%		PV156
100	60-3016	127.2 Sq in	SC	557m	17.5				100m		935n		49	N	Eff 10%		PV157
101	60-3039-12	254.4 Sq in	SC	1.3	18	23.4			100m		935n		49	N	Eff 13%		PV158
102	SSB12-280L		SC	520m†	19 †	80 †			100m	S			2A	P	ADSOLAR		PV195
103	SSM333S		SC	2.2 †	19 †	30.4 †			100m	S			2A	P	ADSOLAR		PV198
104	BPX47C36	1055X428X47	SC	2.01	21.2	33						14 Ø	A §		XX		PV162
105	60-3040-24	848.2 Sq in	SC	2.8	30	84			100m		935n		49	N	Eff 13%		PV152
106	60-3053-24	47.24 sq in	SC	2.5	32	80			100m				24		XX		PV152

TAPE/CARD READER PHOTOVOLTAIC CELL

110	S1188-06	.40 dia	TC	100n							900n	30	28		AD	Y	PT2ad

SYMBOLS AND CODES EXPLAINED IN INTERPRETER

17. PHOTOVOLTAIC CELLS - Tape/Card Reader Cell (Cont'd)

IN ORDER OF: (1) TYPE (2) Voc MIN (3) Isc MAX & (4) TYPE NUMBER

LINE No.	4 TYPE NUMBER	ACTIVE SURFACE	1 TYPE CODE	3 MIN. OUTPUT CURRENT Isc (A)	2 MIN. OUTPUT VOLTAGE Voc (V)	MIN. OUTPUT PWR. Po (W)	TEST CONDITIONS Ev FT.C (fc)	Ev LUX (lx)	Ee (W/cm2)	SOURC	PEAK WAVE LENGTH λp (m)	MAX. REV. VOLT VR (V)	TEMP RNG. CODE - +	POLARITY	MATERIAL & FEATURES MAT	LEAD CODE	DRAWING
1	S1087	1.3x1.3mm	TC	110n							550n	5.0	16	P	AD	B	PV177
2	S1087-03	1.3x1.3mm	TC	110n							550n	5.0	16	P	AD	B	PV177
3	G1115	1.3x1.3mm	TC	120n							610n	5.0	16	P	CA	B	PV142b
4	G1118	1.3x1.3mm	TC	120n							610n	5.0	16	P	CA	B	PV177d
5	G1735	1.3x1.3mm	TC	200n							710n	5.0	16	P	CA	B	PV142b
6	G1738	1.3x1.3mm	TC	200n							710n	5.0	16	P	CA	B	PV177d
7	G1126-02	2.3x2.3mm	TC	250n							610n	5.0	16	P	CA	B	PV142a
8	G1122	1.3x1.3mm	TC	400n							610n	5.0	16	P	CA	B	PT14d
9	G1116	2.7x2.7mm	TC	450n							610n	5.0	16	P	CA	B	PV142a
10	S1133	2.4x2.8mm	TC	450n							550n	5.0	16	P	AD	B	PV177b
11	S1133-03	2.4x2.8mm	TC	450n							550n	5.0	16	P	AD	B	PV177b
12	S1133-05	2.4x2.8mm	TC	450n							550n	5.0	16	P	AD	B	PV177b
13	G1746	2.3x2.3mm	TC	500n							710n	5.0	16	P	CA	B	PV142a
14	G1742	1.3x1.3mm	TC	700n							710n	5.0	16	P	CA	B	PT14d
15	S874-18K	1.2x1.2mm	TC	700n							850n	30	28	P	AD	B	PV142b
16	G1736	2.7x2.7mm	TC	800n							710n	5.0	16	P	CA	B	PV142a
17	S1188	1.08x1.15mm	TC	800n							900n	80	28	P	AD	B	PV142b
18	S1188-03	1.08x1.15mm	TC	800n							900n	80	28	P	AD	Y	PT2ad
19	S1190	1.08x1.15mm	TC	800n							900n	20	28		AD	B	PV142b
20	S1190-03	1.08x1.15mm	TC	800n							900n	20	28		AD	B	PV142b
21	G1127-02	4.6x4.6mm	TC	900n							610n	5.0	16	P	CA	B	PV13d
22	S1087-01	1.3x1.3mm	TC	1.0u							840n	5.0	16	P	AD	B	PV177a
23	G1747	4.6x4.6mm	TC	1.8u							710n	5.0	16	P	CA	B	PV13d
24	G1117	5.6x5.4mm	TC	2.0u							610n	5.0	16	P	CA	B	PV13d
25	G1120	5.6x5.6mm	TC	2.0u							610n	5.0	16	P	CA	B	PV176c
26	S1227-16BQ	1.1x5.9mm	TC	2.0u							720n	5.0	16	P	AD	B	PV175
27	S1227-33BQ	2.5x2.4mm	TC	2.0u							720n	5.0	16	P	AD	B	PV176
28	S1226-5BK	2.5x2.4mm	TC	2.2u							720n	5.0	26	P	AD	B	PV142a
29	S1226-5BQ	2.5x2.4mm	TC	2.2u							720n	5.0	26	P	AD	B	PV142a
30	S1227-16BR	1.1x5.9mm	TC	2.2u							720n	5.0	16	P	AD	B	PV175a
31	S1227-33BR	2.5x2.4mm	TC	2.2u							720n	5.0	16	P	AD	B	PV176a
32	S874-18L	1.2x1.2mm	TC	2.5u							850n	30	28	P	AD	B	PV142b
33	S1133-14	2.4x2.8mm	TC	2.8u							730n	5.0	16	P	AD	B	PV177c
34	S874-5K	2.5x2.4mm	TC	3.2u							850n	30	28	P	AD	B	PV142a
35	S875-33R	2.5x2.4mm	TC	3.2u							850n	30	16	P	AD	B	PV176a
36	G1737	5.6x5.6mm	TC	3.5u							710n	5.0	16	P	CA	B	PV13d
37	G1740	5.6x5.6mm	TC	3.5u							710n	5.0	16	P	CA	B	PV176c
38	S1223-02	2.4x2.8mm	TC	3.7u							925n	30	16		AD	B	PV142c
39	S1336-5BK	2.5x2.4mm	TC	4.0u							950n	5.0	5A	P	AD	B	PV142a
40	S1336-5BQ	2.5x2.4mm	TC	4.0u							950n	5.0	58	P	AD	B	PV142a
41	S1337-16BQ	1.1x5.9mm	TC	4.0u							950n	5.0	28	P	AD	B	PV175
42	S1337-33BQ	2.5x2.4mm	TC	4.0u							950n	5.0	28	P	AD	B	PV176
43	S1633-01	3x3mm	TC	4.0u							900n	35	26		AD	A	PD1040
44	S1133-01	2.4x2.8mm	TC	4.2u							840n	5.0	16	P	AD	B	PV177c
45	S1337-16BR	1.1x5.9mm	TC	4.4u							950n	5.0	27	P	AD	B	PV175a
46	S1337-33BR	2.5x2.4mm	TC	4.4u							950n	5.0	27	P	AD	B	PV176a
47	S1188-01	1.08x1.15mm	TC	6.0u							900n	80	28	P	AD	B	PT14b
48	S1190-01	1.08x1.15mm	TC	6.0u							900n	20	28		AD	B	PT14b
49	S1633	3x3mm	TC	6.0u							900n	35	26		AD	A	PD1040
50	S1223-01	3.7x3.7mm	TC	8.0u							900n	30	28		AD	B	PV142a
51	S1226-8BK	5.9x5.9mm	TC	12u							720n	5.0	26	P	AD	B	PV13d
52	S1226-8BQ	5.9x5.9mm	TC	12u							720n	5.0	26	P	AD	B	PV13d
53	S874-8K	5.9x5.9mm	TC	16u							850n	30	26	P	AD	B	PV13d
54	S875-66R	5.9x5.9mm	TC	20u							850n	30	16	P	AD	B	PV176c
55	S1337-66BQ	2.5x2.4mm	TC	20u							950n	5.0	28	P	AD	B	PV176b
56	S1336-8BK	2.5x2.4mm	TC	22u							950n	5.0		P	AD	B	PV13d
57	S1336-8BQ	2.5x2.4mm	TC	22u							950n	5.0	58	P	AD	B	PV13d
58	S1337-66BR	2.5x2.4mm	TC	22u							950n	5.0	27	P	AD	B	PV176c
59	S1227-1010BQ	10.1x10.2mm	TC	32u							720n	5.0	16	P	AD	B	PV176d
60	S1227-1010BR	10.1x10.2mm	TC	36u							720n	5.0	16	P	AD	B	PV176e
61	S875-1010R	10.1x10.2mm	TC	60u							850n	30	16	P	AD	B	PV176e
62	S1337-1010BQ	10.1x10.2mm	TC	65u							950n	5.0	28	P	AD	B	PV176d
63	S1337-1010BR	10.1x10.2mm	TC	70u							950n	5.0	27	P	AD	B	PV176e
64	STN-EC080-080-060S	.080x.080 in	TC	280u†			800				800n			N	AD Ag Wire	♦	PV68 ☑
65	STN-EC080-080-060W	.080x.080 in	TC	280u†			800				800n			N	AD	♦	PV68 ☑
66	STP-EC080-080-060S	.080x.080 in	TC	280u†			800				800n			P	AD Ag Wire	♦	PV68 ☑
67	STN-EC200-100-060S	.200x.100 in	TC	550u†			500				800n			N	AD Ag Wire	♦	PV68b ☑
68	STN-EC200-100-060W	.200x.100 in	TC	550u†			500				800n			N	AD	♦	PV68b ☑
69	STP-EC200-100-060S	.200x.100 in	TC	550u†			500				800n			P	AD Ag Wire	♦	PV68b ☑
70	STP-EC200-100-060W	.200x.100 in	TC	550u†			500				800n			P	AD	♦	PV68b ☑
71	STN-EC200-080-060S	.200x.080 in	TC	570u†			700				800n			N	AD Ag Wire	♦	PV68a ☑
72	STN-EC200-080-060W	.200x.080 in	TC	570u†			700				800n			N	AD	♦	PV68a ☑
73	STP-EC200-080-060S	.200x.080 in	TC	570u†			700				800n			P	AD Ag Wire	♦	PV68a ☑
74	STP-EC200-080-060W	.200x.080 in	TC	570u†			700				800n			P	AD	♦	PV68a ☑
75	STP-EC080-080-060W	.080x.080 in	TC	280 †			800				800n			P	AD	♦	PV68 ☑
76	ST223-2	.020x.125 in	TC	85u	85m		1.0k			F	850n	2.0	6C		AD	A	PV67a Ø
77	ST223-1	.055x.125 in	TC	250u	250m		1.0k			F	850n	2.0	6C		AD	A	PV67 Ø
78	MS9A	.084x.039 in	TC	300u†	500m†		3.0k			C	850n		5C		AD	A	PV37a ☑
79	MS9AE	.084x.039 in	TC	300u†	500m†		3.0k			C	850n		58		AD		PV34 ☑
80	MS9B	.084x.039 in	TC	300u†	500m†		3.0k			C	850n		5C		AD	A	PV37a ☑
81	MS9BE	.084x.039 in	TC	300u†	500m†		3.0k			C	850n		58		AD		PV34 ☑
82	MS1A	.15x.084 in	TC	1.0m†	500m†		3.0k			C	850n		5C		AD	B	PV33 ☑
83	MS1AE	.15x.084 in	TC	1.0m†	500m†		3.0k			C	850n		58		AD		PV34 ☑
84	MS1B	.15x.084 in	TC	1.0m†	500m†		3.0k			C	850n		5C		AD	B	PV33 ☑
85	MS1BE	.15x.084 in	TC	1.0m†	500m†		3.0k			C	850n		58		AD		PV34 ☑

SYMBOLS AND CODES EXPLAINED IN INTERPRETER

IN ORDER OF: (1) TYPE (2) OUTPUT VOLTAGE (3) OUTPUT CURRENT & (4) TYPE NUMBER

LINE No.	4 TYPE NUMBER	1 TYPE CODE	NO. OF ELEM	PWR OUT Po (W)	3 OUTPUT CUURENT Isc (A)	2 OUTPUT VOLTAGE Voc (V)	RESP. TIME (s)	---TEST CONDITIONS------ Ev FT.C (fc)	Ev LUX (lx)	Ee (W/cm2)	SRC	RL (Ω)	TEMP RNG. CODE	ACT -IVE AREA (in2)	CENTER SPACING (in)	POLAR -ITY	MAT	SCHE-MATIC	DRAWING
POWER CONVERTER SOLAR ARRAY																			
4	SS10-8	PC	8	11 #	28m#	400m	20u			100m	F		6H	279m		P	AD	None	PV61 Δ
5	2SM1020A4	PC	2	14m	18m	800m				100m			28	621m		N	AD	None	PV1 ⊠
6	2SM1020A4PL	PC	2	14m	18m	800m				100m			28	621m		N	AD	None	PV1a ⊠
7	2SM1020A4T	PC	2	14m	18m	800m				100m			28	621m		N	AD	None	PV1b ⊠
8	2SM1020E4	PC	2	14m	18m	800m				100m			28	621m		P	AD	None	PV1 ⊠
9	2SM1020E4PL	PC	2	14m	18m	800m				100m			28	621m		P	AD	None	PV1a ⊠
10	2SM1020E4T	PC	2	14m	18m	800m				100m			28	621m		P	AD	None	PV1b ⊠
11	2SM1020A5	PC	2	18m	21.5m	800m				100m			28	621m		N	AD	None	PV1 ⊠
12	2SM1020A5PL	PC	2	18m	21.5m	800m				100m			28	621m		N	AD	None	PV1a ⊠
13	2SM1020A5T	PC	2	18m	21.5m	800m				100m			28	621m		N	AD	None	PV1b ⊠
14	2SM1020E5	PC	2	18m	21.5m	800m				100m			28	621m		P	AD	None	PV1 ⊠
15	2SM1020E5PL	PC	2	18m	21.5m	800m				100m			28	621m		P	AD	None	PV1a ⊠
16	2SM1020E5T	PC	2	18m	21.5m	800m				100m			28	621m		P	AD	None	PV1b ⊠
17	2SM1020A6	PC	2	21m	27m	800m				100m			28	621m		N	AD	None	PV1 ⊠
18	2SM1020A6PL	PC	2	21m	27m	800m				100m			28	621m		N	AD	None	PV1a ⊠
19	2SM1020A6T	PC	2	21m	27m	800m				100m			28	621m		N	AD	None	PV1b ⊠
20	2SM1020E6	PC	2	21m	27m	800m				100m			28	621m		P	AD	None	PV1 ⊠
21	2SM1020E6PL	PC	2	21m	27m	800m				100m			28	621m		P	AD	None	PV1a ⊠
22	2SM1020E6T	PC	2	21m	27m	800m				100m			28	621m		P	AD	None	PV1b ⊠
23	2SM1020A7	PC	2	25m	31.6m	800m				100m			28	621m		N	AD	None	PV1 ⊠
24	2SM1020A7PL	PC	2	25m	31.6m	800m				100m			28	621m		N	AD	None	PV1a ⊠
25	2SM1020A7T	PC	2	25m	31.6m	800m				100m			28	621m		N	AD	None	PV1b ⊠
26	2SM1020E7	PC	2	25m	31.6m	800m				100m			28	621m		P	AD	None	PV1 ⊠
27	2SM1020E7PL	PC	2	25m	31.6m	800m				100m			28	621m		P	AD	None	PV1a ⊠
28	2SM1020E7T	PC	2	25m	31.6m	800m				100m			28	621m		P	AD	None	PV1b ⊠
29	2SM1020A8	PC	2	28m	36m	800m				100m			28	621m		N	AD	None	PV1 ⊠
30	2SM1020A8PL	PC	2	28m	36m	800m				100m			28	621m		N	AD	None	PV1a ⊠
31	2SM1020A8T	PC	2	28m	36m	800m				100m			28	621m		N	AD	None	PV1b ⊠
32	2SM1020GE8	PC	2	28m	36m	800m				100m			28	621m		P	AD	None	PV1 ⊠
33	2SM1020GE8PL	PC	2	28m	36m	800m				100m			28	621m		P	AD	None	PV1a ⊠
34	2SM1020GE8T	PC	2	28m	36m	800m				100m			28	621m		P	AD	None	PV1b ⊠
35	2SM1020GE9	PC	2	32m	40.5m	800m				100m			28	621m		P	AD	None	PV1 ⊠
36	2SM1020GE9PL	PC	2	32m	40.5m	800m				100m			28	621m		P	AD	None	PV1a ⊠
37	2SM1020GE9T	PC	2	32m	40.5m	800m				100m			28	621m		P	AD	None	PV1b ⊠
38	2SM1020GE10	PC	2	36m	45m	800m				100m			28	621m		P	AD	None	PV1 ⊠
39	2SM1020GE10PL	PC	2	36m	45m	800m				100m			28	621m		P	AD	None	PV1a ⊠
40	2SM1020GE10T	PC	2	36m	45m	800m				100m			28	621m		P	AD	None	PV1b ⊠
41	VTS2060	PC	3	10m	8.4m	1.2	20u			100m	C		5C	195m		P	AD	None	PV1ah ⊠
42	VTS3060	PC	3	10m	8.4m	1.2	20u			100m	C		5C	195m		P	AD	None	PV1as ⊠
43	VTS2061	PC	3	20m	17m	1.2	20u			100m	C		5C	390m		P	AD	None	PV1aj ⊠
44	VTS3061	PC	3	20m	17m	1.2	20u			100m	C		5C	390m		P	AD	None	PV1at ⊠
45	3SM1020A4	PC	3	21m	18m	1.2				100m			28	919m		N	AD	None	PV1c ⊠
46	3SM1020A4PL	PC	3	21m	18m	1.2				100m			28	919m		N	AD	None	PV1d ⊠
47	3SM1020A4T	PC	3	21m	18m	1.2				100m			28	919m		N	AD	None	PV1e ⊠
48	3SM1020E4	PC	3	21m	18m	1.2				100m			28	919m		P	AD	None	PV1c ⊠
49	3SM1020E4PL	PC	3	21m	18m	1.2				100m			28	919m		P	AD	None	PV1d ⊠
50	3SM1020E4T	PC	3	21m	18m	1.2				100m			28	919m		P	AD	None	PV1e ⊠
51	VTS2062	PC	3	21m	18m	1.2	20u			100m	C		5C	420m		P	AD	None	PV1ak ⊠
52	VTS3062	PC	3	21m	18m	1.2	20u			100m	C		5C	420m		P	AD	None	PV1au ⊠
53	3SM1020A5	PC	3	27m	21.5m	1.2				100m			28	919m		N	AD	None	PV1c ⊠
54	3SM1020A5PL	PC	3	27m	21.5m	1.2				100m			28	919m		N	AD	None	PV1d ⊠
55	3SM1020A5T	PC	3	27m	21.5m	1.2				100m			28	919m		N	AD	None	PV1e ⊠
56	3SM1020E5	PC	3	27m	21.5m	1.2				100m			28	919m		P	AD	None	PV1c ⊠
57	3SM1020E5PL	PC	3	27m	21.5m	1.2				100m			28	919m		P	AD	None	PV1d ⊠
58	3SM1020E5T	PC	3	27m	21.5m	1.2				100m			28	919m		P	AD	None	PV1e ⊠
59	3SM1020A6	PC	3	32m	27m	1.2				100m			28	919m		N	AD	None	PV1c ⊠
60	3SM1020A6PL	PC	3	32m	27m	1.2				100m			28	919m		N	AD	None	PV1d ⊠
61	3SM1020A6T	PC	3	32m	27m	1.2				100m			28	919m		N	AD	None	PV1e ⊠
62	3SM1020E6	PC	3	32m	27m	1.2				100m			28	919m		P	AD	None	PV1c ⊠
63	3SM1020E6PL	PC	3	32m	27m	1.2				100m			28	919m		P	AD	None	PV1d ⊠
64	3SM1020E6T	PC	3	32m	27m	1.2				100m			28	919m		P	AD	None	PV1e ⊠
65	3SM1020A7	PC	3	37m	31.6m	1.2				100m			28	919m		N	AD	None	PV1c ⊠
66	3SM1020A7PL	PC	3	37m	31.6m	1.2				100m			28	919m		N	AD	None	PV1d ⊠
67	3SM1020A7T	PC	3	37m	31.6m	1.2				100m			28	919m		N	AD	None	PV1e ⊠
68	3SM1020E7	PC	3	37m	31.6m	1.2				100m			28	919m		P	AD	None	PV1c ⊠
69	3SM1020E7PL	PC	3	37m	31.6m	1.2				100m			28	919m		P	AD	None	PV1d ⊠
70	3SM1020E7T	PC	3	37m	31.6m	1.2				100m			28	919m		P	AD	None	PV1e ⊠
71	3SM1020A8	PC	3	43m	36m	1.2				100m			28	919m		N	AD	None	PV1c ⊠
72	3SM1020A8PL	PC	3	43m	36m	1.2				100m			28	919m		N	AD	None	PV1d ⊠
73	3SM1020A8T	PC	3	43m	36m	1.2				100m			28	919m		N	AD	None	PV1e ⊠
74	3SM1020GE8	PC	3	43m	36m	1.2				100m			28	919m		P	AD	None	PV1c ⊠
75	3SM1020GE8PL	PC	3	43n	36m	1.2				100m			28	919m		P	AD	None	PV1d ⊠
76	3SM1020GE8T	PC	3	43m	36m	1.2				100m			28	919m		P	AD	None	PV1e ⊠
77	VTS2063	PC	3	45m	38m	1.2	20u			100m	C		5C	870m		P	AD	None	PV1am ⊠
78	VTS3063	PC	3	45m	38m	1.2	20u			100m	C		5C	870m		P	AD	None	PV1av ⊠
79	3SM1020GE9	PC	3	48m	40.5m	1.2				100m			28	919m		P	AD	None	PV1c ⊠
80	3SM1020GE9T	PC	3	48m	40.5m	1.2				100m			28	919m		P	AD	None	PV1e ⊠
81	3SM1020GE10	PC	3	54m	45m	1.2				100m			28	919m		P	AD	None	PV1c ⊠
82	3SM1020GE10PL	PC	3	54m	45m	1.2				100m			28	919m		P	AD	None	PV1d ⊠
83	3SM1020GE10T	PC	3	54m	45m	1.2				100m			28	919m		P	AD	None	PV1e ⊠
84	VTS2064	PC	5	16m	8.4m	2.0	20u			100m	C		5C	325m		P	AD	None	PV1an ⊠
85	VTS3064	PC	5	16m	8.4m	2.0	20u			100m	C		5C	325m		P	AD	None	PV1aw ⊠
86	VTS2065	PC	5	34m	17m	2.0	20u			100m	C		5C	650m		P	AD	None	PV1ap ⊠
87	VTS3065	PC	5	34m	17m	2.0	20u			100m	C		5C	650m		P	AD	None	PV1ax ⊠
88	5SM1020A4	PC	5	36m	18m	2.0				100m			28	1.5		N	AD	None	PV1f ⊠
89	5SM1020A4PL	PC	5	36m	18m	2.0				100m			28	1.5		N	AD	None	PV1g ⊠
90	5SM1020A4T	PC	5	36m	18m	2.0				100m			28	1.5		N	AD	None	PV1h ⊠
91	5SM1020E4	PC	5	36m	18m	2.0				100m			28	1.5		P	AD	None	PV1f ⊠
92	5SM1020E4PL	PC	5	36m	18m	2.0				100m			28	1.5		P	AD	None	PV1g ⊠
93	5SM1020E4T	PC	5	36m	18m	2.0				100m			28	1.5		P	AD	None	PV1h ⊠
94	VTS2066	PC	5	36m	18m	2.0	20u			100m	C		5C	700m		P	AD	None	PV1aq ⊠
95	VTS3066	PC	5	36m	18m	2.0	20u			100m	C		5C	700m		P	AD	None	PV1ay ⊠
96	5SM1020A5	PC	5	45m	21.5m	2.0				100m			28	1.5		N	AD	None	PV1f ⊠
97	5SM1020A5PL	PC	5	45m	21.5m	2.0				100m			28	15		N	AD	None	PV1g ⊠
98	5SM1020A5T	PC	5	45m	21.5m	2.0				100m			28	1.5		N	AD	None	PV1h ⊠
99	5SM1020E5	PC	5	45m	21.5m	2.0				100m			28	1.5		P	AD	None	PV1f ⊠
100	5SM1020E5PL	PC	5	45m	21.5m	2.0				100m			28	1.5		P	AD	None	PV1g ⊠
101	5SM1020E5T	PC	5	45m	21.5m	2.0				100m			28	1.5		P	AD	None	PV1h ⊠
102	5SM1020A6	PC	5	54m	27m	2.0				100m			28	1.5		N	AD	None	PV1f ⊠
103	5SM1020A6PL	PC	5	54m	27m	2.0				100m			28	1.5		N	AD	None	PV1g ⊠
104	5SM1020A6T	PC	5	54m	27m	2.0				100m			28	1.5		N	AD	None	PV1h ⊠
105	5SM1020E6	PC	5	54m	27m	2.0				100m			28	1.5		P	AD	None	PV1f ⊠
106	5SM1020E6PL	PC	5	54m	27m	2.0				100m			28	1.5		P	AD	None	PV1g ⊠
107	5SM1020E6T	PC	5	54m	27m	2.0				100m			28	1.5		P	AD	None	PV1h ⊠
108	5SM1020A7	PC	5	63m	31.6m	2.0				100m			28	1.5		N	AD	None	PV1f ⊠
109	5SM1020A7PL	PC	5	63m	31.6m	2.0				100m			28	1.5		N	AD	None	PV1g ⊠
110	5SM1020A7T	PC	5	63m	31.6m	2.0				100m			28	1.5		N	AD	None	PV1h ⊠

SYMBOLS AND CODES EXPLAINED IN INTERPRETER

18. PHOTOVOLTAIC ARRAYS - Power Converter Solar Array (Cont'd)

IN ORDER OF: (1) TYPE (2) OUTPUT VOLTAGE (3) OUTPUT CURRENT & (4) TYPE NUMBER

LINE No.	4 TYPE NUMBER	1 TYPE CODE	NO. OF ELEM	PWR OUT Po (W)	3 OUTPUT CUURENT Isc (A)	2 OUTPUT VOLTAGE Voc (V)	RESP. TIME (s)	---TEST CONDITIONS------ Ev FT.C (fc)	Ev LUX (lx)	Ee (W/ cm2)	SRC	RL (Ω)	TEMP RNG. CODE - +	ACT -IVE AREA (in2)	CENTER SPACING (in)	POLAR -ITY	MAT	SCHE-MATIC	DRAWING
1	5SM1020E7	PC	5	63m	31.6m	2.0				100m			28	1.5		P	AD	None	PV1f ☑
2	5SM1020E7PL	PC	5	63m	31.6m	2.0				100m			28	1.5		P	AD	None	PV1g ☑
3	5SM1020E7T	PC	5	63m	31.6m	2.0				100m			28	1.5		P	AD	None	PV1h ☑
4	5SM1020A8	PC	5	72m	36m	2.0				100m			28	1.5		N	AD	None	PV1f ☑
5	5SM1020A8PL	PC	5	72m	36m	2.0				100m			28	1.5		N	AD	None	PV1g ☑
6	5SM1020A8T	PC	5	72m	36m	2.0				100m			28	1.5		N	AD	None	PV1h ☑
7	5SM1020GE8	PC	5	72m	36m	2.0				100m			28	1.5		P	AD	None	PV1f ☑
8	5SM1020GE8PL	PC	5	72m	36m	2.0				100m			28	1.5		P	AD	None	PV1g ☑
9	5SM1020GE8T	PC	5	72m	36m	2.0				100m			28	1.5		P	AD	None	PV1h ☑
10	VTS2067	PC	5	76m	38m	2.0	20u			100m	C		5C	1.4		P	AD	None	PV1ar ☑
11	VTS3067	PC	5	76m	38m	2.0	20u			100m	C		5C	1.4		P	AD	None	PV1az ☑
12	5SM1020GE9	PC	5	81m	40.5m	2.0				100m			28	1.5		P	AD	None	PV1f ☑
13	5SM1020GE9PL	PC	5	81m	40.5m	2.0				100m			28	1.5		P	AD	None	PV1g ☑
14	5SM1020GE9T	PC	5	81m	40.5m	2.0				100m			28	1.5		P	AD	None	PV1h ☑
15	5SM1020GE10	PC	5	90m	45m	2.0				100m			28	1.5		P	AD	None	PV1f ☑
16	5SM1020GE10PL	PC	5	90m	45m	2.0				100m			28	1.5		P	AD	None	PV1g ☑
17	5SM1020GE10T	PC	5	90n	45m	2.0				100m			28	1.5		P	AD	None	PV1h ☑
18	SPM75-2	PC		640m	320m	2.0				100m	C						AD	None	PV52 ☑
19	SPM200-2	PC		1.0	400m	2.0				100m	C						AD	None	PV52c ☑
20	SPM100-2	PC		960m	480m	2.0				100m	C						AD	None	PV52a ☑
21	SPM150-2	PC		1.4	720m	2.0				100m	C						AD	None	PV52b ☑
22	SPM150-3.6	PC		1.0	300m	3.6				100m	C						AD	None	PV52b ☑
23	SPM75-4	PC		640m	160m	4.0				100m	C						AD	None	PV52 ☑
24	SPM100-4	PC		960m	240m	4.0				100m	C						AD	None	PV52a ☑
25	CSP4.7	PC	12	1.0		4.7				100m			6E				XX	None	PV89 ☑
26	SPM150-6	PC		1.4	240m	6.0				100m	C						AD	None	PV52b ☑
27	CSP7	PC	12	1.0		7.0				100m			6E				XX	None	PV89 ☑
28	SPM75-8	PC		640m	80m	8.0				100m	C						AD	None	PV52 ☑
29	SPM100-12	PC		960m	80m	12				100m	C						AD	None	PV52a ☑
30	SPM150-12	PC		1.4	120m	12				100m	C						AD	None	PV52b ☑
31	CSP14	PC	12	1.0		14				100m			6E				XX	None	PV89 ☑
32	SPM75-16	PC		640m	40m	16				100m	C						AD	None	PV52 ☑
33	CSP16.5	PC	12	1.0		16.5				100m			6E				XX	None	PV89 ☑
34	SPM150-18	PC		1.4	80m	18				100m	C						AD	None	PV52b ☑
35	BPX47A	PC	34	11	720m	20				100m							AD	None	PV104
36	SPM100-24	PC		960m	40m	24				100m	C						AD	None	PV52a ☑
37	CSP28	PC	12	1.0		28				100m			6E				XX	None	PV89 ☑
38	SPM150-36	PC		1.4	40m	36				100m	C						AD	None	PV52b ☑
39	SPM200-6	PC		1.0	180m	60				100m	C						AD	None	PV52c ☑
40	SPM200-18	PC		1.0	60m	180				100m	C						AD	None	PV52c ☑

TAPE/CARD READER CELL ARRAY

44	SD11148P-A(A)	TC	4											.90 *	7.74m			None	TO-5
45	SD11148P-B(A)	TC	4											5.4 *	.25m			None	TO-5
46	SD11148P-C(A)	TC	4											95 *	.25m			None	TO-8
47	STN-EC9-080-080-060	TC	9		280u			800							80m	N	AD	None	PV69b △
48	STN-EC12-080-080-060	TC	12		280u			800							80m	N	AD	None	PV69b △
49	STP-EC9-080-080-060	TC	9		280u			800							80m	P	AD	None	PV69b △
50	STP-EC12-080-080-060	TC	12		280u			800							80m	P	AD	None	PV69b △
51	STN-EC9-200-100-060	TC	9		540u			500							100m	N	AD	None	PV69 △
52	STN-EC12-200-100-060	TC	12		540u			500							100m	N	AD	None	PV69 △
53	STP-EC9-200-100-060	TC	9		540u			500							100m	P	AD	None	PV69 △
54	STP-EC12-200-100-060	TC	12		540u			500							100m	P	AD	None	PV69 △
55	STN-EC9-200-080-060	TC	9		560u			700							80m	N	AD	None	PV69a △
56	STN-EC12-200-080-060	TC	12		560u			700							80m	N	AD	None	PV69a △
57	STP-EC9-200-080-060	TC	9		560u			700							80m	P	AD	None	PV69a △
58	STP-EC12-200-080-060	TC	12		560u			700							80m	P	AD	None	PV69a △
59	SSR10-002	TC	10	32m	225u	325m	20u	500			F		6H	8.4m	87m		XX	None	PV39 △
60	SSR4-001	TC	4	73m	250u	325m	20u	500			F		6H	10m	100m		XX	None	None
61	SSR5-001	TC	5	73m	250u	325m	20u	500			F		6H	10m	100m		XX	None	None
62	SSR6-001	TC	6	73m	250u	325m	20u	500			F		6H	10m	100m		XX	None	None
63	SSR7-001	TC	7	73m	250u	325m	20u	500			F		6H	10m	100m		XX	None	None
64	SSR8-001	TC	8	73m	250u	325m	20u	500			F		6H	10m	100m		XX	None	None
65	SSR9-001	TC	9	73m	250u	325m	20u	500			F		6H	10m	100m		XX	None	None
66	SSR10-001	TC	10	73m	250u	325m	20u	500			F		6H	10m	100m		XX	None	None
67	SSHR4-001	TC	4	90m	300u	325m	10u	500			F		6H	8.7m	100m	N	XX	None	PV56 △
68	SSHR5-001	TC	5	90m	300u	325m	10u	500			F		6H	8.7m	100m	N	XX	None	PV56a △
69	SSHR6-001	TC	6	90m	300u	325m	10u	500			F		6H	8.7m	100m	N	XX	None	PV56b △
70	SSHR7-001	TC	7	90m	300u	325m	10u	500			F		6H	8.7m	100m	N	XX	None	PV56c △
71	SSHR8-001	TC	8	90m	300u	325m	10u	500			F		6H	8.7m	100m	N	XX	None	PV56d △
72	SSHR9-001	TC	9	90m	300u	325m	10u	500			F		6H	8.7m	100m	N	XX	None	PV56e △
73	SSHR10-001	TC	10	90m	300u	325m	10u	500			F		6H	8.7m	100m	N	XX	None	PV56f △
74	PN2-113	TC	2		1.3u#	410m#	30u		1.0k		C	1.0k	2A	305m	407m	P	AD	None	CH *
75	PN11-119	TC	11		23u#	410m#	400n		1.0k		C	1.0k	2A	4.0m	47.0m	P	AD	None	CH *
76	PN20-1W	TC	20		23u#	410m#	400n		1.0k		C	1.0k	2A	4.0m	39.0m	P	AD	None	CH *
77	PN24-1	TC	24		23u#	410m#	400n		1.0k		C	1.0k	2A	4.0m	39.0m	P	AD	None	CH *
78	PN35-1	TC	35		23u#	410m#	400n		1.0k		C	1.0k	2A	4.0m	39.0m	P	AD	None	CH *
79	PN4-12R	TC	4		25u#	410m#	400n		1.0k		C	1.0k	2A	4.0m		P	AD	None	CH *
80	PN6-10R	TC	6		25u#	410m#	400n		1.0k		C	1.0k	2A	4.0m		P	AD	None	CH *
81	PN4-9R	TC	4		30u#	410m#	500n		1.0k		C	1.0k	2A	5.0m		P	AD	None	CH *
82	PN4RA	TC	4		34u#	410m#	600n		1.0k		C	1.0k	2A	6.0m		P	AD	None	CH *
83	PN2-17	TC	2		46u#	410m#	800n		1.0k		C	1.0k	2A	8.0m	67.0m	P	AD	None	CH *
84	PN4-17	TC	4		46u#	410m#	800n		1.0k		C	1.0k	2A	8.0m	67.0m	P	AD	None	CH *
85	PN2-254	TC	2		52u#	410m#	900n		1.0k		C	1.0k	2A	9.0m	100m	P	AD	None	CH *
86	PN9-254	TC	9		52u#	410m#	900n		1.0k		C	1.0k	2A	9.0m	100m	P	AD	None	CH *
87	PN2-29	TC	2		63u#	410m#	1.2u		1.0k		C	1.0k	2A	12m	114m	P	AD	None	CH *
88	PN2-27Y	TC	2		86u#	410m#	1.7u		1.0k		C	1.0k	2A	17m	199m	P	AD	None	CH *
89	SAR1-08B	TC	1	32u	250	325	2.0u	500			F	1.0k	28	14m	87m	N	AD	None	PV10 ☑
90	SAR1-08BPL	TC	1	32u	250	325	2.0u	500			F	1.0k	28	14m	87m	N	AD	None	PV10w ☑
91	SAR1-08PL	TC	1	32u	250	325	2.0u	500			F	1.0k	28	14m	87m	N	AD	None	PV10at ☑
92	SAR2-08B	TC	2	32u	250	325	2.0u	500			F	1.0k	28	14m	87m	N	AD	None	PV10a ☑
93	SAR2-08BPL	TC	2	32u	250	325	2.0u	500			F	1.0k	28	14m	87m	N	AD	None	PV10x ☑
94	SAR2-08PL	TC	2	32u	250	325	2.0u	500			F	1.0k	28	14m	87m	N	AD	None	PV10au ☑
95	SAR3-08B	TC	3	32u	250	325	2.0u	500			F	1.0k	28	14m	87m	N	AD	None	PV10b ☑
96	SAR3-08BPL	TC	3	32u	250	325	2.0u	500			F	1.0k	28	14m	87m	N	AD	None	PV10y ☑
97	SAR3-08PL	TC	3	32u	250	325	2.0u	500			F	1.0k	28	14m	87m	N	AD	None	PV10av ☑
98	SAR4-08B	TC	4	32u	250	325	2.0u	500			F	1.0k	28	14m	87m	N	AD	None	PV10c ☑

SYMBOLS AND CODES EXPLAINED IN INTERPRETER

18. PHOTOVOLTAIC ARRAYS - Tape/Card Reader Cell Array (Cont'd)

IN ORDER OF: (1) TYPE (2) OUTPUT VOLTAGE (3) OUTPUT CURRENT & (4) TYPE NUMBER

LINE No.	4 TYPE NUMBER	1 TYPE CODE	NO. OF ELEM	PWR OUT Po (W)	3 OUTPUT CUURENT Isc (A)	2 OUTPUT VOLTAGE Voc (V)	RESP. TIME (s)	---TEST CONDITIONS------ Ev FT.C (fc)	Ev LUX (lx)	Ee (W/cm2)	SRC	RL (Ω)	TEMP RNG. CODE - +	ACT -IVE AREA (in2)	CENTER SPACING (in)	POLAR -ITY	MAT	SCHE-MATIC	DRAWING
1	SAR4-08BPL	TC	4	32u	250	325	2.0u	500			F	1.0k	28	14m	87m	N	AD	None	PV10z ☑
2	SAR4-08PL	TC	4	32u	250	325	2.0u	500			F	1.0k	28	14m	87m	N	AD	None	PV10aw ☑
3	SAR5-08B	TC	5	32u	250	325	2.0u	500			F	1.0k	28	14m	87m	N	AD	None	PV10d ☑
4	SAR5-08BPL	TC	5	32u	250	325	2.0u	500			F	1.0k	28	14m	87m	N	AD	None	PV10aa ☑
5	SAR5-08PL	TC	5	32u	250	325	2.0u	500			F	1.0k	28	14m	87m	N	AD	None	PV10ax ☑
6	SAR6-08B	TC	6	32u	250	325	2.0u	500			F	1.0k	28	14m	87m	N	AD	None	PV10e ☑
7	SAR6-08BPL	TC	6	32u	250	325	2.0u	500			F	1.0k	28	14m	87m	N	AD	None	PV10ab ☑
8	SAR6-08PL	TC	6	32u	250	325	2.0u	500			F	1.0k	28	14m	87m	N	AD	None	PV10ay ☑
9	SAR7-08B	TC	7	32u	250	325	2.0u	500			F	1.0k	28	14m	87m	N	AD	None	PV10f ☑
10	SAR7-08BPL	TC	7	32u	250	325	2.0u	500			F	1.0k	28	14m	87m	N	AD	None	PV10ac ☑
11	SAR7-08PL	TC	7	32u	250	325	2.0u	500			F	1.0k	28	14m	87m	N	AD	None	PV10az ☑
12	SAR8-08B	TC	8	32u	250	325	2.0u	500			F	1.0k	28	14m	87m	N	AD	None	PV10g ☑
13	SAR8-08BPL	TC	8	32u	250	325	2.0u	500			F	1.0k	28	14m	87m	N	AD	None	PV10ad ☑
14	SAR8-08PL	TC	8	32u	250	325	2.0u	500			F	1.0k	28	14m	87m	N	AD	None	PV10ba ☑
15	SAR9-08B	TC	9	32u	250	325	2.0u	500			F	1.0k	28	14m	87m	N	AD	None	PV10h ☑
16	SAR9-08BPL	TC	9	32u	250	325	2.0u	500			F	1.0k	28	14m	87m	N	AD	None	PV10ae ☑
17	SAR9-08PL	TC	9	32u	250	325	2.0u	500			F	1.0k	28	14m	87m	N	AD	None	PV10bb ☑
18	SAR10-08B	TC	10	32u	250	325	2.0u	500			F	1.0k	28	14m	87m	N	AD	None	PV10j ☑
19	SAR10-08BPL	TC	10	32u	250	325	2.0u	500			F	1.0k	28	14m	87m	N	AD	None	PV10af ☑
20	SAR10-08PL	TC	10	32u	250	325	2.0u	500			F	1.0k	28	14m	87m	N	AD	None	PV10bc ☑
21	SPR1-08B	TC	1	32u	250	325	2.0u	500			F	1.0k	28	14m	87m	P	AD	None	PV10 ☑
22	SPR1-08BPL	TC	1	32u	250	325	2.0u	500			F	1.0k	28	14m	87m	P	AD	None	PV10w ☑
23	SPR1-08PL	TC	1	32u	250	325	2.0u	500			F	1.0k	28	14m	87m	P	AD	None	PV10at ☑
24	SPR2-08B	TC	2	32u	250	325	2.0u	500			F	1.0k	28	14m	87m	P	AD	None	PV10a ☑
25	SPR2-08BPL	TC	2	32u	250	325	2.0u	500			F	1.0k	28	14m	87m	P	AD	None	PV10x ☑
26	SPR2-08PL	TC	2	32u	250	325	2.0u	500			F	1.0k	28	14m	87m	P	AD	None	PV10au ☑
27	SPR3-08B	TC	3	32u	250	325	2.0u	500			F	1.0k	28	14m	87m	P	AD	None	PV10b ☑
28	SPR3-08BPL	TC	3	32u	250	325	2.0u	500			F	1.0k	28	14m	87m	P	AD	None	PV10y ☑
29	SPR3-08PL	TC	3	32u	250	325	2.0u	500			F	1.0k	28	14m	87m	P	AD	None	PV10av ☑
30	SPR4-08B	TC	4	32u	250	325	2.0u	500			F	1.0k	28	14m	87m	P	AD	None	PV10c ☑
31	SPR4-08BPL	TC	4	32u	250	325	2.0u	500			F	1.0k	28	14m	87m	P	AD	None	PV10z ☑
32	SPR4-08PL	TC	4	32u	250	325	2.0u	500			F	1.0k	28	14m	87m	P	AD	None	PV10aw ☑
33	SPR5-08B	TC	5	32u	250	325	2.0u	500			F	1.0k	28	14m	87m	P	AD	None	PV10d ☑
34	SPR5-08BPL	TC	5	32u	250	325	2.0u	500			F	1.0k	28	14m	87m	P	AD	None	PV10aa ☑
35	SPR5-08PL	TC	5	32u	250	325	2.0u	500			F	1.0k	28	14m	87m	P	AD	None	PV10ax ☑
36	SPR6-08B	TC	6	32u	250	325	2.0u	500			F	1.0k	28	14m	87m	P	AD	None	PV10e ☑
37	SPR6-08BPL	TC	6	32u	250	325	2.0u	500			F	1.0k	28	14m	87m	P	AD	None	PV10ab ☑
38	SPR6-08PL	TC	6	32u	250	325	2.0u	500			F	1.0k	28	14m	87m	P	AD	None	PV10ay ☑
39	SPR7-08B	TC	7	32u	250	325	2.0u	500			F	1.0k	28	14m	87m	P	AD	None	PV10f ☑
40	SPR7-08BPL	TC	7	32u	250	325	2.0u	500			F	1.0k	28	14m	87m	P	AD	None	PV10ac ☑
41	SPR7-08PL	TC	7	32u	250	325	2.0u	500			F	1.0k	28	14m	87m	P	AD	None	PV10az ☑
42	SPR8-08B	TC	8	32u	250	325	2.0u	500			F	1.0k	28	14m	87m	P	AD	None	PV10g ☑
43	SPR8-08BPL	TC	8	32u	250	325	2.0u	500			F	1.0k	28	14m	87m	P	AD	None	PV10ad ☑
44	SPR8-08PL	TC	8	32u	250	325	2.0u	500			F	1.0k	28	14m	87m	P	AD	None	PV10ba ☑
45	SPR9-08B	TC	9	32u	250	325	2.0u	500			F	1.0k	28	14m	87m	P	AD	None	PV10h ☑
46	SPR9-08BPL	TC	9	32u	250	325	2.0u	500			F	1.0k	28	14m	87m	P	AD	None	PV10ae ☑
47	SPR9-08PL	TC	9	32u	250	325	2.0u	500			F	1.0k	28	14m	87m	P	AD	None	PV10bb ☑
48	SPR10-08B	TC	10	32u	250	325	2.0u	500			F	1.0k	28	14m	87m	P	AD	None	PV10j ☑
49	SPR10-08BPL	TC	10	32u	250	325	2.0u	500			F	1.0k	28	14m	87m	P	AD	None	PV10af ☑
50	SPR10-08PL	TC	10	32u	250	325	2.0u	500			F	1.0k	28	14m	87m	P	AD	None	PV10bc ☑
51	SAR1-10B	TC	1	73u	315	325	2.0u	500			F	1.0k	28	17m	100m	N	AD	None	PV10k ☑
52	SAR1-10BPL	TC	1	73u	315	325	2.0u	500			F	1.0k	28	17m	100m	N	AD	None	PV10ag ☑
53	SAR1-10PL	TC	1	73u	315	325	2.0u	500			F	1.0k	28	17m	100m	N	AD	None	PV10bd ☑
54	SAR2-10B	TC	2	73u	315	325	2.0u	500			F	1.0k	28	17m	100m	N	AD	None	PV10m ☑
55	SAR2-10BPL	TC	2	73u	315	325	2.0u	500			F	1.0k	28	17m	100m	N	AD	None	PV10ah ☑
56	SAR2-10PL	TC	2	73u	315	325	2.0u	500			F	1.0k	28	17m	100m	N	AD	None	PV10be ☑
57	SAR3-10B	TC	3	73u	315	325	2.0u	500			F	1.0k	28	17m	100m	N	AD	None	PV10n ☑
58	SAR3-10BPL	TC	3	73u	315	325	2.0u	500			F	1.0k	28	17m	100m	N	AD	None	PV10aj ☑
59	SAR3-10PL	TC	3	73u	315	325	2.0u	500			F	1.0k	28	17m	100m	N	AD	None	PV10bf ☑
60	SAR4-10B	TC	4	73u	315	325	2.0u	500			F	1.0k	28	17m	100m	N	AD	None	PV10p ☑
61	SAR4-10BPL	TC	4	73u	315	325	2.0u	500			F	1.0k	28	17m	100m	N	AD	None	PV10ak ☑
62	SAR4-10PL	TC	4	73u	315	325	2.0u	500			F	1.0k	28	17m	100m	N	AD	None	PV10bg ☑
63	SAR5-10B	TC	5	73u	315	325	2.0u	500			F	1.0k	28	17m	100m	N	AD	None	PV10q ☑
64	SAR5-10BPL	TC	5	73u	315	325	2.0u	500			F	1.0k	28	17m	100m	N	AD	None	PV10am ☑
65	SAR5-10PL	TC	5	73u	315	325	2.0u	500			F	1.0k	28	17m	100m	N	AD	None	PV10bh ☑
66	SAR6-10B	TC	6	73u	315	325	2.0u	500			F	1.0k	28	17m	100m	N	AD	None	PV10r ☑
67	SAR6-10BPL	TC	6	73u	315	325	2.0u	500			F	1.0k	28	17m	100m	N	AD	None	PV10an ☑
68	SAR6-10PL	TC	6	73u	315	325	2.0u	500			F	1.0k	28	17m	100m	N	AD	None	PV10bj ☑
69	SAR7-10B	TC	7	73u	315	325	2.0u	500			F	1.0k	28	17m	100m	N	AD	None	PV10s ☑
70	SAR7-10BPL	TC	7	73u	315	325	2.0u	500			F	1.0k	28	17m	100m	N	AD	None	PV10ap ☑
71	SAR7-10PL	TC	7	73u	315	325	2.0u	500			F	1.0k	28	17m	100m	N	AD	None	PV10bk ☑
72	SAR8-10B	TC	8	73u	315	325	2.0u	500			F	1.0k	28	17m	100m	N	AD	None	PV10t ☑
73	SAR8-10BPL	TC	8	73u	315	325	2.0u	500			F	1.0k	28	17m	100m	N	AD	None	PV10aq ☑
74	SAR8-10PL	TC	8	73u	315	325	2.0u	500			F	1.0k	28	17m	100m	N	AD	None	PV10bm ☑
75	SAR9-10B	TC	9	73u	315	325	2.0u	500			F	1.0k	28	17m	100m	N	AD	None	PV10u ☑
76	SAR9-10BPL	TC	9	73u	315	325	2.0u	500			F	1.0k	28	17m	100m	N	AD	None	PV10ar ☑
77	SAR9-10PL	TC	9	73u	315	325	2.0u	500			F	1.0k	28	17m	100m	N	AD	None	PV10bn ☑
78	SAR10-10B	TC	10	73u	315	325	2.0u	500			F	1.0k	28	17m	100m	N	AD	None	PV10v ☑
79	SAR10-10BPL	TC	10	73u	315	325	2.0u	500			F	1.0k	28	17m	100m	N	AD	None	PV10as ☑
80	SAR10-10PL	TC	10	73u	315	325	2.0u	500			F	1.0k	28	17m	100m	N	AD	None	PV10bp ☑
81	SPR1-10B	TC	1	73u	315	325	2.0u	500			F	1.0k	28	17m	100m	P	AD	None	PV10k ☑
82	SPR1-10BPL	TC	1	73u	315	325	2.0u	500			F	1.0k	28	17m	100m	P	AD	None	PV10ag ☑
83	SPR1-10PL	TC	1	73u	315	325	2.0u	500			F	1.0k	28	17m	100m	P	AD	None	PV10bd ☑
84	SPR2-10B	TC	2	73u	315	325	2.0u	500			F	1.0k	28	17m	100m	P	AD	None	PV10m ☑
85	SPR2-10BPL	TC	2	73u	315	325	2.0u	500			F	1.0k	28	17m	100m	P	AD	None	PV10ah ☑
86	SPR2-10PL	TC	2	73u	315	325	2.0u	500			F	1.0k	28	17m	100m	P	AD	None	PV10be ☑
87	SPR3-10B	TC	3	73u	315	325	2.0u	500			F	1.0k	28	17m	100m	P	AD	None	PV10n ☑
88	SPR3-10BPL	TC	3	73u	315	325	2.0u	500			F	1.0k	28	17m	100m	P	AD	None	PV10aj ☑
89	SPR3-10PL	TC	3	73u	315	325	2.0u	500			F	1.0k	28	17m	100m	P	AD	None	PV10bf ☑
90	SPR4-10B	TC	4	73u	315	325	2.0u	500			F	1.0k	28	17m	100m	P	AD	None	PV10p ☑
91	SPR4-10BPL	TC	4	73u	315	325	2.0u	500			F	1.0k	28	17m	100m	P	AD	None	PV10ak ☑
92	SPR4-10PL	TC	4	73u	315	325	2.0u	500			F	1.0k	28	17m	100m	P	AD	None	PV10bg ☑
93	SPR5-10B	TC	5	73u	315	325	2.0u	500			F	1.0k	28	17m	100m	P	AD	None	PV10q ☑
94	SPR5-10BPL	TC	5	73u	315	325	2.0u	500			F	1.0k	28	17m	100m	P	AD	None	PV10am ☑
95	SPR5-10PL	TC	5	73u	315	325	2.0u	500			F	1.0k	28	17m	100m	P	AD	None	PV10bh ☑
96	SPR6-10B	TC	6	73u	315	325	2.0u	500			F	1.0k	28	17m	100m	P	AD	None	PV10r ☑
97	SPR6-10BPL	TC	6	73u	315	325	2.0u	500			F	1.0k	28	17m	100m	P	AD	None	PV10an ☑
98	SPR6-10PL	TC	6	73u	315	325	2.0u	500			F	1.0k	28	17m	100m	P	AD	None	PV10bj ☑
99	SPR7-10B	TC	7	73u	315	325	2.0u	500			F	1.0k	28	17m	100m	P	AD	None	PV10s ☑
100	SPR7-10BPL	TC	7	73u	315	325	2.0u	500			F	1.0k	28	17m	100m	P	AD	None	PV10ap ☑
101	SPR7-10PL	TC	7	73u	315	325	2.0u	500			F	1.0k	28	17m	100m	P	AD	None	PV10bk ☑
102	SPR8-10B	TC	8	73u	315	325	2.0u	500			F	1.0k	28	17m	100m	P	AD	None	PV10t ☑
103	SPR8-10BPL	TC	8	73u	315	325	2.0u	500			F	1.0k	28	17m	100m	P	AD	None	PV10aq ☑
104	SPR8-10PL	TC	8	73u	315	325	2.0u	500			F	1.0k	28	17m	100m	P	AD	None	PV10bm ☑
105	SPR9-10B	TC	9	73u	315	325	2.0u	500			F	1.0k	28	17m	100m	P	AD	None	PV10u ☑
106	SPR9-10BPL	TC	9	73u	315	325	2.0u	500			F	1.0k	28	17m	100m	P	AD	None	PV10ar ☑
107	SPR9-10PL	TC	9	73u	315	325	2.0u	500			F	1.0k	28	17m	100m	P	AD	None	PV10bn ☑
108	SPR10-10B	TC	10	73u	315	325	2.0u	500			F	1.0k	28	17m	100m	P	AD	None	PV10v ☑
109	SPR10-10BPL	TC	10	73u	315	325	2.0u	500			F	1.0k	28	17m	100m	P	AD	None	PV10as ☑
110	SPR10-10PL	TC	10	73u	315	325	2.0u	500			F	1.0k	28	17m	100m	P	AD	None	PV10bp ☑

SYMBOLS AND CODES EXPLAINED IN INTERPRETER

19. GAP & REFLECTIVE SENSORS - Emitter-Sensor Array

IN ORDER OF FORM AND: (1) CHANNELS (2) OUTPUT CURRENT & (4) TYPE NUMBER

LINE No.	[4] TYPE NUMBER	[1]	[2] DETECTOR OUTPUT CURRENT IC (A)	[4] IF (A)	VCC (V)	MAX.DETECT. SAT. VOLT VCE(SAT) (V)	IF (A)	NOM. SEP. (in)	MAX. DIODE REV V VR (V)	MAX. DIODE FWD I IF (A)	MAX. C/E VOLT VCE (V)	TEMP RNG. CODE - +	RESP TIME (s)	TYPE OF O/P CKT	DESCRIPTION	SCHE-MATIC	DRAWING
EMITTER-SENSOR ARRAY																	
4	OPB508	9	1.6m	30m	5.0 #			.100		50m	25			TR		None	PA23
5	PP900	9	4.0m	150m	5.0	400m	4.0m#	.100				5C%	900n#	ST	Tape/Crd Rdr	BE15	PS50 ⊠
6	STA71SS	9	4.5m		5.0 #	700m	50m		5.0	75m		4A	20u	TR	MF650m	FA16	PS9 △
7	OT911	9	8.0m									07	22n#	ST		BE15	PS266 *
8	OT910S	9	80m									07	22n#	ST		BE15	PS50 ⊠
9	OT911S	9	80m									07	22n#	ST		BE15	PS266 *
10	STA73SS	10	4.5m		5.0 #	700m	50m		5.0	75m		4A	20u	TR	MF650m	FA16	PS10 △
11	OPB840	12												ST	Ppr Tape Rdr	FA45	PS291
12	OPB841	12												ST	Ppr Tape Rdr	FA45	PS291
13	OPB842	12												ST	Ppr Tape Rdr	FA45	PS291
14	OPB512	12	1.6mØ	50m	5.0 #	400m	30m	100m	2.0	50m	25	48	3.0u#	TR	Reader	None	PS40a △
15	OPB512A	12	1.6mØ	50m	5.0 #	400m	30m	100m	2.0	100m	25	6C	3.0u#	TR	Reader	None	PS40a
16	STA74SS	12	4.5m		5.0 #	700m	50m		5.0	75m		4A	20u	TR	MF650m	FA16	PS11 △
GAP DETECTOR																	
20	CLI305	1				500m	20m	250m	3.0	60m	30	5A§	5.0u#	AP	IRED/NPN	FA32	PS1a ⊠
21	GP1A01	1				16	50m	118m		50m	16	28	5.0u	IC	opto-circuit	FA55	PS392
22	GP1A02	1				16	20m	118m		50m	16	28	5.0u	IC	Bi direction	FA55	PS392
23	HOA0961L51	1						3.18 *		20m		48	60n#	ST	Plastic;IR 10uA	None ♦	PS454a
24	HOA0961N51	1						3.18 *		20m		48	60n#	ST	Plastic;IR 10uA	None ♦	PS454
25	HOA0961P51	1						3.18 *		20m		48	60n#	ST	Plastic;IR 10uA	None ♦	PS454c
26	HOA0961T51	1						3.18 *		20m		48	60n#	ST	Plastic;IR 10uA	None ♦	PS454b
27	HOA0963L55	1						3.18 *		20m		48	60n#	ST	Plastic;IR 10uA	None ♦	PS454a
28	HOA0963N55	1						3.18 *		20m		48	60n#	ST	Plastic;IR 10uA	None ♦	PS454
29	HOA0963P55	1						3.18 *		20m		48	60n#	ST	Plastic;IR 10uA	None ♦	PS454c
30	HOA0963T55	1						3.18 *		20m		48	60n#	ST	Plastic;IR 10uA	None ♦	PS454b
31	HOA0971L51	1						3.18 *		20m		48	60n#	ST	Plastic;IR 10uA	None ♦	PS454a
32	HOA0971N51	1						3.18 *		20m		48	60n#	ST	Plastic;IR 10uA	None ♦	PS454
33	HOA0971P51	1						3.18 *		20m		48	60n#	ST	Plastic;IR 10uA	None ♦	PS454c
34	HOA0971T51	1						3.18 *		20m		48	60n#	ST	Plastic;IR 10uA	None ♦	PS454b
35	HOA0973L55	1						3.18 *		20m		48	60n#	ST	Plastic;IR 10uA	None ♦	PS454a
36	HOA0973N55	1						3.18 *		20m		48	60n#	ST	Plastic;IR 10uA	None ♦	PS454
37	HOA0973P55	1						3.18 *		20m		48	60n#	ST	Plastic;IR 10uA	None ♦	PS454c
38	HOA0973T55	1						3.18 *		20m		48	60n#	ST	Plastic;IR 10uA	None ♦	PS454b
39	HOA6960L51	1						3.18 *		15m		47	70n#	ST	Buffer W/TP O/P	None ♦	PS454a
40	HOA6960L55	1						3.18 *		15m		47	70n#	ST	Buffer W/TP O/P	None ♦	PS454a
41	HOA6960N51	1						3.18 *		15m		47	70n#	ST	Buffer W/TP O/P	None ♦	PS454
42	HOA6960N55	1						3.18 *		15m		47	70n#	ST	Buffer W/TP O/P	None ♦	PS454
43	HOA6960P51	1						3.18 *		15m		47	70n#	ST	Buffer W/TP O/P	None ♦	PS454c
44	HOA6960P55	1						3.18 *		15m		47	70n#	ST	Buffer W/TP O/P	None ♦	PS454c
45	HOA6960T51	1						3.18 *		15m		47	70n#	ST	Buffer W/TP O/P	None ♦	PS454b
46	HOA6960T55	1						3.18 *		15m		47	70n#	ST	Buffer W/TP O/P	None ♦	PS454b
47	HOA6961L51	1						3.18 *		15m		47	70n#	ST	Buffer W/OC O/P	None ♦	PS454a
48	HOA6961L55	1						3.18 *		15m		47	70n#	ST	Buffer W/OC O/P	None ♦	PS454a
49	HOA6961N51	1						3.18 *		15m		47	70n#	ST	Buffer W/OC O/P	None ♦	PS454
50	HOA6961N55	1						3.18 *		15m		47	70n#	ST	Buffer W/OC O/P	None ♦	PS454
51	HOA6961P51	1						3.18 *		15m		47	70n#	ST	Buffer W/OC O/P	None ♦	PS454c
52	HOA6961P55	1						3.18 *		15m		47	70n#	ST	Buffer W/OC O/P	None ♦	PS454c
53	HOA6961T51	1						3.18 *		15m		47	70n#	ST	Buffer W/OC O/P	None ♦	PS454b
54	HOA6961T55	1						3.18 *		15m		47	70n#	ST	Buffer W/OC O/P	None ♦	PS454b
55	HOA6962L51	1						3.18 *		15m		47	70n#	ST	Inverter,TP O/P	None ♦	PS454a
56	HOA6962L55	1						3.18 *		15m		47	70n#	ST	Inverter,TP O/P	None ♦	PS454a
57	HOA6962N51	1						3.18 *		15m		47	70n#	ST	Inverter,TP O/P	None ♦	PS454
58	HOA6962N55	1						3.18 *		15m		47	70n#	ST	Inverter,TP O/P	None ♦	PS454
59	HOA6962P51	1						3.18 *		15m		47	70n#	ST	Inverter,TP O/P	None ♦	PS454c
60	HOA6962P55	1						3.18 *		15m		47	70n#	ST	Inverter,TP O/P	None ♦	PS454c
61	HOA6962T51	1						3.18 *		15m		47	70n#	ST	Inverter,TP O/P	None ♦	PS454b
62	HOA6962T55	1						3.18 *		15m		47	70n#	ST	Inverter,TP O/P	None ♦	PS454b
63	HOA6963L51	1						3.18 *		15m		47	70n#	ST	Inverter,OC O/P	None ♦	PS454a
64	HOA6963L55	1						3.18 *		15m		47	70n#	ST	Inverter,OC O/P	None ♦	PS454a
65	HOA6963N51	1						3.18 *		15m		47	70n#	ST	Inverter,OC O/P	None ♦	PS454
66	HOA6963N55	1						3.18 *		15m		47	70n#	ST	Inverter,OC O/P	None ♦	PS454
67	HOA6963P51	1						3.18 *		15m		47	70n#	ST	Inverter,OC O/P	None ♦	PS454c
68	HOA6963P55	1						3.18 *		15m		47	70n#	ST	Inverter,OC O/P	None ♦	PS454c
69	HOA6963T51	1						3.18 *		15m		47	70n#	ST	Inverter,OC O/P	None ♦	PS454b
70	HOA6963T55	1						3.18 *		15m		47	70n#	ST	Inverter,OC O/P	None ♦	PS454b
71	HOA6964L51	1						3.18 *		15m		47	70n#	ST	Buffer W/10K PU	None ♦	PS454a
72	HOA6964L55	1						3.18 *		15m		47	70n#	ST	Buffer W/10k PU	None ♦	PS454a
73	HOA6964N51	1						3.18 *		15m		47	70n#	ST	Buffer W/10K PU	None ♦	PS454
74	HOA6964N55	1						3.18 *		15m		47	70n#	ST	Buffer W/10k PU	None ♦	PS454
75	HOA6964P51	1						3.18 *		15m		47	70n#	ST	Buffer W/10K PU	None ♦	PS454c
76	HOA6964P55	1						3.18 *		15m		47	70n#	ST	Buffer W/10k PU	None ♦	PS454c
77	HOA6964T51	1						3.18 *		15m		47	70n#	ST	Buffer W/10K PU	None ♦	PS454b
78	HOA6964T55	1						3.18 *		15m		47	70n#	ST	Buffer W/10k PU	None ♦	PS454b
79	HOA6965L51	1						3.18 *		15m		47	70n#	ST	Inverter,10K PU	None ♦	PS454a
80	HOA6965L55	1						3.18 *		15m		47	70n#	ST	Inverter,10k PU	None ♦	PS454a
81	HOA6965N51	1						3.18 *		15m		47	70n#	ST	Inverter,10K PU	None ♦	PS454
82	HOA6965N55	1						3.18 *		15m		47	70n#	ST	Inverter,10k PU	None ♦	PS454
83	HOA6965P51	1						3.18 *		15m		47	70n#	ST	Inverter,10K PU	None ♦	PS454c
84	HOA6965P55	1						3.18 *		15m		47	70n#	ST	Inverter,10k PU	None ♦	PS454c
85	HOA6965T51	1						3.18 *		15m		47	70n#	ST	Inverter,10K PU	None ♦	PS454b
86	HOA6965T55	1						3.18 *		15m		47	70n#	ST	Inverter,10k PU	None ♦	PS454b
87	HOA6970L51	1						3.18 *		15m		47	70n#	ST	Buffer W/TP O/P	None ♦	PS454a
88	HOA6970L55	1						3.18 *		15m		47	70n#	ST	Buffer W/TP O/P	None ♦	PS454a
89	HOA6970N51	1						3.18 *		15m		47	70n#	ST	Buffer W/TP O/P	None ♦	PS454
90	HOA6970N55	1						3.18 *		15m		47	70n#	ST	Buffer W/TP O/P	None ♦	PS454
91	HOA6970P51	1						3.18 *		15m		47	70n#	ST	Buffer W/TP O/P	None ♦	PS454c
92	HOA6970P55	1						3.18 *		15m		47	70n#	ST	Buffer W/TP O/P	None ♦	PS454c
93	HOA6970T51	1						3.18 *		15m		47	70n#	ST	Buffer W/TP O/P	None ♦	PS454b
94	HOA6970T55	1						3.18 *		15m		47	70n#	ST	Buffer W/TP O/P	None ♦	PS454b
95	HOA6971L51	1						3.18 *		15m		47	70n#	ST	Buffer W/OC O/P	None ♦	PS454a
96	HOA6971L55	1						3.18 *		15m		47	70n#	ST	Buffer W/OC O/P	None ♦	PS454a
97	HOA6971N51	1						3.18 *		15m		47	70n#	ST	Buffer W/OC O/P	None ♦	PS454
98	HOA6971N55	1						3.18 *		15m		47	70n#	ST	Buffer W/OC O/P	None ♦	PS454
99	HOA6971P51	1						3.18 *		15m		47	70n#	ST	Buffer W/OC O/P	None ♦	PS454c
100	HOA6971P55	1						3.18 *		15m		47	70n#	ST	Buffer W/OC O/P	None ♦	PS454c
101	HOA6971T51	1						3.18 *		15m		47	70n#	ST	Buffer W/OC O/P	None ♦	PS454b
102	HOA6971T55	1						3.18 *		15m		47	70n#	ST	Buffer W/OC O/P	None ♦	PS454b
103	HOA6972L51	1						3.18 *		15m		47	70n#	ST	Inverter,TP O/P	None ♦	PS454a
104	HOA6972L55	1						3.18 *		15m		47	70n#	ST	Inverter,TP O/P	None ♦	PS454a
105	HOA6972N51	1						3.18 *		15m		47	70n#	ST	Inverter,TP O/P	None ♦	PS454
106	HOA6972N55	1						3.18 *		15m		47	70n#	ST	Inverter,TP O/P	None ♦	PS454
107	HOA6972P51	1						3.18 *		15m		47	70n#	ST	Inverter,TP O/P	None ♦	PS454c
108	HOA6972P55	1						3.18 *		15m		47	70n#	ST	Inverter,TP O/P	None ♦	PS454c
109	HOA6972T51	1						3.18 *		15m		47	70n#	ST	Inverter,TP O/P	None ♦	PS454b
110	HOA6972T55	1						3.18 *		15m		47	70n#	ST	Inverter,TP O/P	None ♦	PS454b

SYMBOLS AND CODES EXPLAINED IN INTERPRETER

19. GAP & REFLECTIVE SENSORS - Gap Detector (Cont'd)

IN ORDER OF FORM AND: (1) CHANNELS (2) OUTPUT CURRENT & (4) TYPE NUMBER

LINE No.	4 TYPE NUMBER	1 CHAN	2 DETECTOR OUTPUT CURRENT IC (A)	4 IF (A)	VCC (V)	MAX.DETECT. SAT. VOLT VCE(SAT) (V)	IF (A)	NOM. SEP. (in)	MAX. DIODE REV V VR (V)	MAX. DIODE FWD I IF (A)	MAX. C/E VOLT VCE (V)	TEMP RNG. CODE - +	RESP TIME (s)	TYPE OF O/P CKT	DESCRIPTION	SCHE-MATIC	DRAWING
1	HOA6973L51	1						3.18 *		15m		47	70n#	ST	Inverter,OC O/P	None ♦	PS454a
2	HOA6973L55	1						3.18 *		15m		47	70n#	ST	Inverter,OC O/P	None ♦	PS454a
3	HOA6973N51	1						3.18 *		15m		47	70n#	ST	Inverter,OC O/P	None ♦	PS454
4	HOA6973N55	1						3.18 *		15m		47	70n#	ST	Inverter,OC O/P	None ♦	PS454
5	HOA6973P51	1						3.18 *		15m		47	70n#	ST	Inverter,OC O/P	None ♦	PS454c
6	HOA6973P55	1						3.18 *		15m		47	70n#	ST	Inverter,OC O/P	None ♦	PS454c
7	HOA6973T51	1						3.18 *		15m		47	70n#	ST	Inverter,OC O/P	None ♦	PS454b
8	HOA6973T55	1						3.18 *		15m		47	70n#	ST	Inverter,OC O/P	None ♦	PS454b
9	HOA6974L51	1						3.18 *		15m		47	70n#	ST	Buffer W/10k PU	None ♦	PS454a
10	HOA6974L55	1						3.18 *		15m		47	70n#	ST	Buffer W/10k PU	None ♦	PS454a
11	HOA6974N51	1						3.18 *		15m		47	70n#	ST	Buffer W/10k PU	None ♦	PS454
12	HOA6974N55	1						3.18 *		15m		47	70n#	ST	Buffer W/10k PU	None ♦	PS454
13	HOA6974P51	1						3.18 *		15m		47	70n#	ST	Buffer W/10k PU	None ♦	PS454c
14	HOA6974P55	1						3.18 *		15m		47	70n#	ST	Buffer W/10k PU	None ♦	PS454c
15	HOA6974T51	1						3.18 *		15m		47	70n#	ST	Buffer W/10k PU	None ♦	PS454b
16	HOA6974T55	1						3.18 *		15m		47	70n#	ST	Buffer W/10k PU	None ♦	PS454b
17	HOA6975L51	1						3.18 *		15m		47	70n#	ST	Inverter,10k PU	None ♦	PS454a
18	HOA6975L55	1						3.18 *		15m		47	70n#	ST	Inverter,10k PU	None ♦	PS454a
19	HOA6975N51	1						3.18 *		15m		47	70n#	ST	Inverter,10k PU	None ♦	PS454
20	HOA6975N55	1						3.18 *		15m		47	70n#	ST	Inverter,10k PU	None ♦	PS454
21	HOA6975P51	1						3.18 *		15m		47	70n#	ST	Inverter,10k PU	None ♦	PS454c
22	HOA6975P55	1						3.18 *		15m		47	70n#	ST	Inverter,10k PU	None ♦	PS454c
23	HOA6975T51	1						3.18 *		15m		47	70n#	ST	Inverter,10k PU	None ♦	PS454b
24	HOA6975T55	1						3.18 *		15m		47	70n#	ST	Inverter,10k PU	None ♦	PS454b
25	MOC74T1	1						.115	6.0	50m	200	48§		TR	SCR	FA68	PS439
26	MOC74U1	1						.115	6.0	50m	200	48§		TR	SCR	FA68	PS440
27	ON1107	1							3.0	50m	30	3A%		DR		FA3c	PS132b
28	OPB960L51	1						.125	3.0	40m	2.4	47		TR	Buf.T-P Out.	CE45	PS318a
29	OPB960L55	1						.125	3.0	40m	2.4	47		TR	Buf.T-P Out.	CE45	PS318a
30	OPB960N51	1						.125	3.0	40m	2.4	47		TR	Buf.T-P Out.	CE45	PS318b
31	OPB960N55	1						.125	3.0	40m	2.4	47		TR	Buf.T-P Out.	CE45	PS318b
32	OPB960P51	1						.125	3.0	40m	2.4	47		TR	Buf.T-P Out.	CE45	PS318c
33	OPB960P55	1						.125	3.0	40m	2.4	47		TR	Buf.T-P Out.	CE45	PS318c
34	OPB960T51	1						.125	3.0	40m	2.4	47		TR	Buf.T-P Out.	CE45	PS318
35	OPB960T55	1						.125	3.0	40m	2.4	47		TR	Buf.T-P Out.	CE45	PS318
36	OPB961L51	1						.125	3.0	40m		47		TR	Buf Open Col	CE28	PS318a
37	OPB961L55	1						.125	3.0	40m		47		TR	Buf Open Col	CE28	PS318a
38	OPB961N51	1						.125	3.0	40m		47		TR	Buf Open Col	CE28	PS318b
39	OPB961N55	1						.125	3.0	40m		47		TR	Buf Open Col	CE28	PS318b
40	OPB961P51	1						.125	3.0	40m		47		TR	Buf Open Col	CE28	PS318c
41	OPB961P55	1						.125	3.0	40m		47		TR	Buf Open Col	CE28	PS318c
42	OPB961T51	1						.125	3.0	40m		47		TR	Buf Open Col	CE28	PS318
43	OPB961T55	1						.125	3.0	40m		47		TR	Buf Open Col	CE28	PS318
44	OPB962L51	1						.125	3.0	40m	2.4	47		TR	Inv.T-P Out.	CE47	PS318a
45	OPB962L55	1						.125	3.0	40m	2.4	47		TR	Inv.T-P Out.	CE47	PS318a
46	OPB962N51	1						.125	3.0	40m	2.4	47		TR	Inv.T-P Out.	CE47	PS318b
47	OPB962N55	1						.125	3.0	40m	2.4	47		TR	Inv.T-P Out.	CE47	PS318b
48	OPB962P51	1						.125	3.0	40m	2.4	47		TR	Inv.T-P Out.	CE47	PS318c
49	OPB962P55	1						.125	3.0	40m	2.4	47		TR	Inv.T-P Out.	CE47	PS318c
50	OPB962T51	1						.125	3.0	40m	2.4	47		TR	Inv.T-P Out.	CE47	PS318
51	OPB962T55	1						.125	3.0	40m	2.4	47		TR	Inv.T-P Out.	CE47	PS318
52	OPB963L51	1						.125	3.0	40m		47		TR	Inv Open Col	CE28	PS318a
53	OPB963L55	1						.125	3.0	40m		47		TR	Inv Open Col	CE28	PS318a
54	OPB963N51	1						.125	3.0	40m		47		TR	Inv Open Col	CE28	PS318b
55	OPB963N55	1						.125	3.0	40m		47		TR	Inv Open Col	CE28	PS318b
56	OPB963P51	1						.125	3.0	40m		47		TR	Inv Open Col	CE28	PS318c
57	OPB963P55	1						.125	3.0	40m		47		TR	Inv Open Col	CE28	PS318c
58	OPB963T51	1						.125	3.0	40m		47		TR	Inv Op Col	CE28	PS318
59	OPB963T55	1						.125	3.0	40m		47		TR	Inv Op Col	CE28	PS318
60	OPB970L51	1						.125	3.0	40m	2.4	47		TR	Buf.T-P Out.	CE45	PS318a
61	OPB970L55	1						.125	3.0	40m	2.4	47		TR	Buf.T-P Out.	CE45	PS318a
62	OPB970N51	1						.125	3.0	40m	2.4	47		TR	Buf T-P Out	CE45	PS318b
63	OPB970N55	1						.125	3.0	40m	2.4	47		TR	Buf T-P Out	CE45	PS318b
64	OPB970P51	1						.125	3.0	40m	2.4	47		TR	Buf T-P Out	CE45	PS318c
65	OPB970P55	1						.125	3.0	40m	2.4	47		TR	Buf.T-P Out.	CE45	PS318c
66	OPB970T51	1						.125	3.0	40m	2.4	47		TR	Buf T-P Out	CE45	PS318
67	OPB970T55	1						.125	3.0	40m	2.4	47		TR	Buf T-P Out	CE45	PS318
68	OPB971L51	1						.125	3.0	40m		47		TR	Buf.OpenCol.	CE28	PS318a
69	OPB971L55	1						.125	3.0	40m		47		TR	Buf.OpenCol.	CE28	PS318a
70	OPB971N51	1						.125	3.0	40m		47		TR	Buf.OpenCol.	CE28	PS318b
71	OPB971N55	1						.125	3.0	40m		47		TR	Buf.OpenCol.	CE28	PS318b
72	OPB971P51	1						.125	3.0	40m		47		TR	Buf Open Col	CE28	PS318c
73	OPB971P55	1						.125	3.0	40m		47		TR	Buf Open Col	CE28	PS318c
74	OPB971T51	1						.125	3.0	40m	2.4	47		TR	Buf.OpenCol.	CE28	PS318
75	OPB971T55	1						.125	3.0	40m		47		TR	Buf.OpenCol.	CE28	PS318
76	OPB972L51	1						.125	3.0	40m	2.4	47		TR	Inv.T-P Out.	CE47	PS318a
77	OPB972L55	1						.125	3.0	40m	2.4	47		TR	Inv.T-P Out.	CE47	PS318a
78	OPB972N51	1						.125	3.0	40m	2.4	47		TR	Inv.T-P Out.	CE47	PS318b
79	OPB972N55	1						.125	3.0	40m	2.4	47		TR	Inv.T-P Out.	CE47	PS318b
80	OPB972P51	1						.125	3.0	40m	2.4	47		TR	Inv.T-P Out.	CE47	PS318c
81	OPB972P55	1						.125	3.0	40m	2.4	47		TR	Inv.T-P Out.	CE47	PS318c
82	OPB972T51	1						.125	3.0	40m	2.4	47		TR	Inv.T-P Out.	CE47	PS318
83	OPB972T55	1						.125	3.0	40m	2.4	47		TR	Inv.T-P Out.	CE47	PS318
84	OPB973L51	1						.125	3.0	40m		47		TR		CE28	PS318a
85	OPB973L55	1						.125	3.0	40m		47		TR		CE28	PS318a
86	OPB973N51	1						.125	3.0	40m		47		TR		CE28	PS318b
87	OPB973N55	1						.125	3.0	40m		47		TR		CE28	PS318b
88	OPB973P51	1						.125	3.0	40m		47		TR		CE28	PS318c
89	OPB973P55	1						.125	3.0	40m		47		TR		CE28	PS318c
90	OPB973T51	1						.125	3.0	40m		47		TR		CE28	PS318
91	OPB973T55	1						.125	3.0	40m		47		TR		CE28	PS318
92	OTS250	1			30 #			.375	6	60m		5A	15 *	TR		FA2	PS321
93	OTS255	1			30 #			.375	6	60m		5A	240 *	TR		FA2	PS321
94	OTS265	1				800m	25m	.125	6.0	60m		07	500n		Interrupter	FA69b	PS193 ☑
95	OTS270	1				500m	20m	.130	6.0	60m	30	59	5.0u#	TR	Interrupter	FA23a	PS473 ☑
96	OTS271	1				800m	25m	.130	6.0	60m		07	500n		Interrupter	FA69b	PS473 ☑
97	OTS275	1				800m	25m	.125	6.0	60m		07	500n		Interrupter	FA69b	PS193 ☑
98	OTS281	1				800m	25m	.130	6.0	60m		07	500n		Interrupter	FA69b	PS473 ☑
99	P1022	1				500m			4.0	40m	20	28	6.0u#			FA48	PS343
100	P1144	1				1.0			6.0	50m	35	28	130u#			FA3	PS344
101	PS4001(1)	1				1.2	10m		5.0	50m	30	28	200u#	DA		FA3	PH285
102	PS4003	1				1.2	10m		5.0	50m	30	28	200u#	DA		FA3	PS132e
103	PS4005	1				1.2	10m		5.0	50m	30	28	200u#	DA		FA3	PS185
104	PS4007	1				1.2	10m		5.0	50m	30	28	200u#	DA		FA3	PS447
105	PS4009	1				1.2	10m		5.0	50m	50	28	200u#	DA	LED Darlingt	FA3	PS269
106	PS4010	1				1.2	10m		5.0	50m	30	28	200u#	DA		FA3	PH286
107	PS4011	1				1.2	10m		5.0	50m	30	28	200u#	DA		FA3	PH287
108	SG27N	1				1.5	30m	5.0 *	5.0	100m		28	5.0u	DI	Pc 150mW	FA57	PS408 ☑
109	VTL10G1	1		3.0m	15			.125	2.0	40m		48	200n	TR	Slot Sw Mod	CE48	PS318
110	VTL10G1A	1		3.0m	15			.125	2.0	40m		48	200n	TR	Slot Sw ModA	CE48	PS318a

SYMBOLS AND CODES EXPLAINED IN INTERPRETER

19. GAP & REFLECTIVE SENSORS - Gap Detector (Cont'd)

IN ORDER OF FORM AND: (1) CHANNELS (2) OUTPUT CURRENT & (4) TYPE NUMBER

LINE No.	[4] TYPE NUMBER	[1] CHAN	[2] DETECTOR OUTPUT CURRENT IC (A)	[4] IF (A)	VCC (V)	MAX.DETECT. SAT. VOLT VCE(SAT) (V)	IF (A)	NOM. SEP. (in)	MAX. DIODE REV V VR (V)	MAX. DIODE FWD I IF (A)	MAX. C/E VOLT VCE (V)	TEMP RNG. CODE - +	RESP TIME (s)	TYPE OF O/P CKT	DESCRIPTION	SCHE-MATIC	DRAWING
1	VTL10G1B	1		3.0m	15			.125	2.0	40m		48	200n	TR	Slot Sw ModB	CE48	PS318b
2	VTL10G2	1		3.0m	15			.125	2.0	40m		48	200n	TR	Slot Sw Mod	CE48	PS318
3	VTL10G2A	1		3.0m	15			.125	2.0	40m		48	200n	TR	Slot Sw ModA	CE48	PS318a
4	VTL10G2B	1		3.0m	15			.125	2.0	40m		48	200n	TR	Slot Sw ModB	CE48	PS318b
5	VTL10G3	1		3.2m	15			.125	2.0	40m		48	200n	TR	Slot Sw Mod	CE48	PS318
6	VTL10G3A	1		3.2m	15			.125	2.0	40m		48	200n	TR	Slot Sw ModA	CE48	PS318a
7	VTL10G3B	1		3.2m	15			.125	2.0	40m		48	200n	TR	Slot Sw ModB	CE48	PS318b
8	H21L2	1		15m	5.0	400m	20m	125m	6.0	60m		58	1.0u	ST	Interrupter	FA49	PS318
9	H22L2	1		15m	5.0	400m	20m	125m	6.0	60m		58	1.0u	ST	Interrupter	FA49	PS318a
10	OPB824A	1		20m	10 #	400m	20m	.125	3.0	50m	30	48		TR		FA2c	PS273
11	H21L1	1		30m	5.0	400m	30m	125m	6.0	60m		58	1.0u	ST	Interrupter	FA49	PS318
12	H22L1	1		30m	5.0	400m	30m	125m	6.0	60m		58	1.0u	ST	Interrupter	FA49	PS318a
13	GP1L01	1		50m	35 #			3.0 *					80u	DA	CTR 300	None	None
14	GP1L01F	1		50m	35 #			3.0 *					80u	DA	CTR 250	None	None
15	GP1S01F	1		50m	35 #			3.0 *					3.0u	TR	CTR 8.0	None	None
16	GP1S02	1		50m	35 #			3.0 *					3.0u	TR	CTR 2.5	None	None
17	GP1S03	1		50m	35 #			3.2 *					3.0u	TR	CTR 2.5	None	None
18	GP1S04	1		50m	35 #			3.0 *					3.0u	TR	CTR 2.5	None	None
19	GP2L01	1		50m	35 #			5.0 *					80u	DA	CTR 30	None	None
20	GP2L01F	1		50m	35 #			5.0 *					80u	DA	CTR 25	None	None
21	GP2L02	1		50m	35 #			1.0 *					80u	DA	CTR 12.5	None	None
22	GP2S01	1		50m	35 #			5.0 *					30u	TR	CTR 1.0	None	None
23	GP2S01F	1		50m	35 #			5.0 *					30u	TR	CTR 1.0	None	None
24	GP2S02	1		50m	35 #			1.0 *					20u	TR	CTR 0.5	None	None
25	GP2S03	1		50m	35 #			5.0 *					30u	TR	CTR 0.8	None	None
26	GP415	1		50m	35 #			3.0 *					500u	DA	CTR 5.0	None	None
27	GP1L02	1		65m	35 #			4.2 *					130u	DA	CTR 20	None	None
28	GP505	1	15u	50m	10 #			216m	6.0	100m		06	18u#	DI		FA23a	PS128 ☑
29	STIN135T2	1	50u	20m	10	400m	20m	125m			30	58	5.0u#	TR		None	PS87 ☑
30	K8154	1	60u	20m		400m	20m	.080				48		TR	Interrupter	FA41	PS243f
31	K8164	1	60u	20m		400m	20m	.080				48		TR	Interrupter	None	PS244f
32	K8114	1	75u	20m		400m	20m	.125				48		TR	Interrupter	FA2e	PS4c
33	OPB813S3	1	75uØ	20m	10 #	400m	20m	125m	3.0	50m	30	58		TR		FA23	PS197c ☑
34	CLI210	1	100uØ	20m	5.0 #	500m	20m	100m	3.0	60m	40	5F%	15u#	TR	Switch	FA23a	PS218c
35	CLI500	1	100uØ	20m	5.0 #	400m	30m	80m	4.0	60m	30	5F%	5.0u#	TR	Switch	FA23a	PS132d
36	HOA2762-001	1	100uØ	20m	5 #	0.4	20m	1.52 *	3	50m	30	5C	10u#	TR	Hermetic	None	PS461
37	MCT81	1	100u	20m	10 #	400m	20m	.100	3.0	50m	30	5A	6.0u	TR	ICEO 300nA	FA3	PS4 ☑
38	MOC70W1	1	100uØ	20m	10 #	400m	20m	.100	6.0	50m	30	48§		TR		FA67	PS438
39	OPB818	1	100uØ	20m	5.0 #	400m	20m	200m	3.0	20m				TR		None	PS242
40	SG1CL3K	1	100uØ	20m	5.0 #	1.5	30m	3.5 *	4.0	60m	20	27	100u	DA	Pc 70mW	FA3	PS218g ☑
41	SG7L4	1	100uØ	20m	5.0 #	400m	30m	3.2 *	4.0	60m	20	26	5.0u	TR	Pc 75mW	FA2d	PS403 ☑
42	SG11FKT	1	100uØ	20m	5.0 #	1.5	30m	2.7 *	3.0	60m	20	28	200u	DA	Pc 100mW	FA3e	PS404 ☑
43	ON1122	1	100u	25m		500m	20m		3.0	25m	30	3A%	60u	TR		FA23a	PS4e
44	ON1128	1	100u	25m		500m	20m		3.0	20m	30	3A%	60u	TR		FA23b	PS218
45	HOA1877-001	1	100uØ	30m	5 #	0.4	20m	9.53 *	3	50m	30	5C	10u#	TR	Hermetic	None	PS23
46	ON1105	1	100u	50m		300m	50m		3.0	50m	30	3A%		TR		FA23a	PS4e
47	ON1106	1	100u	50m		300m	50m		3.0	50m	30	3A%	60u	TR		FA23a	PS132b
48	SS750-10	1	150uØ	5.0m	5.0 #	0.4	30m	.125	6.0	60m		5A	8.0u	TR	Interrupter	FA23a	PS366
49	SS750-40	1	150uØ	5.0m	5.0 #	0.4	30m	.125	6.0	60m		5A	8.0u	TR	Interrupter	FA23a	PS366
50	SS760-10	1	150uØ	5.0m	5.0 #	0.4	30m	.125	6.0	60m		5A	8.0u	TR	Interrupter	FA23a	PS367
51	SS760-40	1	150uØ	5.0m	5.0 #	0.4	30m	.125	6.0	60m		5A	8.0u	TR	Interrupter	FA23a	PS367
52	HOA1875-001	1	150uØ	30m	5 #	0.4	20m	5.08 *	3	50m	30	5A	10u#	TR	Hermetic	None	PS21
53	HOA1876-001	1	150u	30m	5 #	0.4	20m	5.08 *	3	50m	30	5C	10u#	TR	Hermetic	None	PS22
54	STCT0A	1	150u	40m	5.0	400m	50m	60m			25	48	25u#	TR		None	PS28 ☑
55	STCT1A	1	150u	40m	5.0	400m	50m	190m			25	48	25u#	TR		None	PS28a ☑
56	STCT2A	1	150u	40m	5.0	400m	50m	190m			25	48	25u#	TR		None	PS28a ☑
57	K8153	1	170u	20m		400m	20m	.080				48		TR	Interrupter	FA41	PS243e
58	K8163	1	170u	20m		400m	20m	.080				48		TR	Interrupter	None	PS244e
59	OPB820S5	1	170uØ	20m	5.0 #	400m	20m	60m	2.0	20m				TR		None	PS243b
60	OPB821S5	1	170uØ	20m	5.0 #	400m	20m	60m	2.0	20m				TR		None	PS244b
61	CLI810	1	200u	5.0m	5.0 #	400m	30m	125m	4.0	60m	30	5F%	5.0u#	TR	Switch	FA23a	PS132d
62	CLI810M	1	200u	5.0m	5.0 #	400m	30m	125m	4.0	60m	5.0	5F%	5.0u#	TR	Switch	FA23a	PS132d
63	CLI810W	1	200u	5.0m	5.0 #	400m	30m	125m	4.0	60m	30	5F%	5.0u#	TR	Switch	FA23a	PS297
64	CLI811	1	200u	5.0m	5.0 #	500m	30m	125m	4.0	60m	55	5F%	5.0u#	TR	Switch	FA23a	PS132d
65	CLI811M	1	200u	5.0m	5.0 #	400m	30m	125m	4.0	60m	5.0	5F%	5.0u#	TR	Switch	FA23a	PS132d
66	CLI811W	1	200u	5.0m	5.0 #	400m	30m	125m	4.0	60m	5.0	5F%	5.0u#	TR	Switch	FA23a	PS297
67	CNY36	1	200uØ	20m	10 #	400m	20m	120m	5.0	40m	32	48	2.1u#	TR		FA6	PS108 ☑
68	HOA1878-011	1	200u	20m	5 #	0.4	20m	3.18 *	3	60m	30	48	10u#	TR	Plastic;Two Tabs	None	PS458
69	HOA2862-001	1	200uØ	20m	5 #	0.4	20m	2.54 *	3	50m	30	5A	10u#	TR	Hermetic	None	PS462
70	K8170	1	200u	20m		400m	20m	.125				48		TR	Interrupter	FA2c	PS273
71	ON1103	1	200u	20m	10 #	300m	50m	118m	3.0	50m	30	28	6.0u			FA23a	PS4e
72	OPB819S10	1	200uØ	20m	10 #	400m	20m	60m	3.0	20m				TR		FA23	PS197
73	PS4014	1	200u	20m	5.0	0.3	10m		5.0	50m	30	4A%	5.0u#	TR		FA72	PS132e
74	STIN135T1	1	200u	20m	10	400m	20m	125m			30	58	5.0u#	TR		None	PS87 ☑
75	VTL10E6	1	.25m	2.0m	5.0	1.0	10m	.125	2.0	40m	30	48	150u	DA	Slot Sw Mod	None	None
76	VTL10E6A	1	.25m	2.0m	5.0	1.0	10m	.125	2.0	40m	30	48	150u	DA	Slot Sw ModA	None	None
77	VTL10E6B	1	.25m	2.0m	5.0	1.0	10m	.125	2.0	40m	30	48	150u	DA	Slot Sw ModB	None	None
78	VTL11E6	1	.25m	2.0m	5.0	1.0	10m	.125	2.0	40m	30	48	150u	DA	Slot Sw Mod	None	None
79	VTL11E6A	1	.25m	2.0m	5.0	1.0	10m	.125	2.0	40m	30	48	150u	DA	Slot Sw ModA	None	None
80	VTL11E6B	1	.25m	2.0m	5.0	1.0	10m	.125	2.0	40m	30	48	150u	DA	Slot Sw ModB	None	None
81	VTL12E6	1	.25m	2.0m	5.0	1.0	10m	.125	2.0	40m	30	48	150u	DA	Slot Sw Mod	None	None
82	VTL12E6A	1	.25m	2.0m	5.0	1.0	10m	.125	2.0	40m	30	48	150u	DA	Slot Sw ModA	None	None
83	VTL12E6B	1	.25m	2.0m	5.0	1.0	10m	.125	2.0	40m	30	48	150u	DA	Slot Sw ModB	None	None
84	VTL13E6	1	.25m	2.0m	5.0	1.0	10m	.125	2.0	40m	30	48	150u	DA	Slot Sw Mod	None	None
85	VTL13E6A	1	.25m	2.0m	5.0	1.0	10m	.125	2.0	40m	30	48	150u	DA	Slot Sw ModA	None	None
86	VTL13E6B	1	.25m	2.0m	5.0	1.0	10m	.125	2.0	40m	30	48	150u	DA	Slot Sw ModB	None	None
87	VTL13E7A	1	.25m	2.0m	5.0	1.0	10m	.125	2.0	40m	30	48	150u	DA	Slot Sw ModA	None	None
88	VTL18E6	1	250u	2.0m	5.0 #	1.0	10m	3.2 *	2.0	40m	30	48		DA	TTL Comp	FA3d	PS389a
89	K8113	1	250u	20m		400m	20m	.125				48		TR	Interrupter	FA2e	PS4c
90	MCT8	1	250u	20m	10 #	400m	20m	.100	3.0	50m	30	5A	6.0u	TR	ICEO 350nA	FA3	PS4 ☑
91	MOC70W2	1	250uØ	20m	10 #	400m	20m	.100	6.0	50m	30	48§		TR		FA67	PS438
92	OPB813S5	1	250uØ	20m	10 #	400m	20m	125m	3.0	50m	30	58		TR		FA23	PS197b ☑
93	VTL10D6	1	250u	20m	5.0 #	0.4	20m	3.2 *	2.0	40m	30	48		TR	TTL Comp	FA2c	PS389a
94	VTL10D6A	1	.25m	20m	5.0	400m	20m	.125	2.0	40m	30	48	5.0u	TR	Slot Sw ModA	None	None
95	VTL10D6B	1	.25m	20m	5.0	400m	20m	.125	2.0	40m	30	48	5.0u	TR	Slot Sw ModB	None	None
96	VTL11D6	1	250u	20m	5.0 #	0.4	20m	3.2 *	2.0	40m	30	48		TR	TTL Comp	FA2c	PS389a
97	VTL11D6A	1	.25m	20m	5.0	400m	20m	.125	2.0	40m	30	48	5.0u	TR	Slot SW ModA	None	None
98	VTL11D6B	1	.25m	20m	5.0	400m	20m	.125	2.0	40m	30	48	5.0u	TR	Slot Sw ModB	None	None
99	VTL12D6	1	250u	20m	5.0 #	0.4	20m	3.2 *	2.0	40m	30	48		TR	TTL Comp	FA2c	PS389a
100	VTL12D6B	1	.25m	20m	5.0	400m	20m	.125	2.0	40m	30	48	5.0u	TR	Slot Sw ModB	None	None
101	VTL13D6	1	250u	20m	5.0 #	0.4	20m	3.2 *	2.0	40m	30	48		TR	TTLComp	FA2c	PS389a
102	VTL13D6A	1	.25m	20m	5.0	400m	20m	.125	2.0	40m	30	48	5.0u	TR	Slot Sw ModA	None	None
103	VTL13D6B	1	.25m	20m	5.0	400m	20m	.125	2.0	40m	30	48	5.0u	TR	Slot Sw ModB	None	None
104	VTL18D6	1	250u	20m	5.0 #	0.4	20m	3.2 *	2.0	40m	30	48		TR	TTL Comp	FA2c	PS389a
105	ON1113	1	300uØ		10 #	0.5	50m	.118	3.0	50m	30	28	6.0u#	TR	PC Mount	FA23a	PS464
106	SS750-20	1	300uØ	5.0m	5.0 #	0.4	20m	.125	6.0	60m		5A	8.0u	TR	Interrupter	FA23a	PS366
107	SS750-50	1	300uØ	5.0m	5.0 #	0.4	20m	.125	6.0	60m		5A	8.0u	TR	Interrupter	FA23a	PS366
108	SS760-20	1	300uØ	5.0m	5.0 #	0.4	20m	.125	6.0	60m		5A	8.0u	TR	Interrupter	FA23a	PS367
109	SS760-50	1	300uØ	5.0m	5.0 #	0.4	20m	.125	6.0	60m		5A	8.0u	TR	Interrupter	FA23a	PS367
110	HOA1870-031	1	300u	20m	5 #	400m	20m	1.78 *	3	60m	30	48	10u#	TR	Plastic	None ♦	PS244h

SYMBOLS AND CODES EXPLAINED IN INTERPRETER

IN ORDER OF FORM AND: (1) CHANNELS (2) OUTPUT CURRENT & (4) TYPE NUMBER

LINE No.	4 TYPE NUMBER	1 CHAN	2 DETECTOR OUTPUT CURRENT IC (A)	4 IF (A)	VCC (V)	MAX.DETECT. SAT. VOLT VCE(SAT) (V)	IF (A)	NOM. SEP. (in)	MAX. DIODE REV V VR (V)	MAX. DIODE FWD I IF (A)	MAX. C/E VOLT VCE (V)	TEMP RNG. CODE - +	RESP TIME (s)	TYPE OF O/P CKT	DESCRIPTION	SCHE-MATIC	DRAWING
1	HOA1872-001	1	300uØ	20m	5 #	400m	20m	2.54 *	3	50m	30	5A	10u#	TR	Hermetic	None	PS455 ☑
2	HOA1872-011	1	300u	20m	5 #	0.4	20m	2.54 *	3	60m	30	48	10u#	TR	Plastic;No Tab	None	PS455a ☑
3	HOA1873-001	1	300uØ	20m	5 #	0.4	20m	2.54 *	3	50m	30	5C	10u#	TR	Hermetic	None	PS456 ☑
4	HOA1873-011	1	300u	20m	5 #	0.4	20m	2.54 *	3	60m	30	48	10u#	TR	Plastic;Two Tabs	None	PS456
5	HOA1874-001	1	300uØ	20m	5 #	0.4	20m	3.05 *	3	50m	30	5C	10u#	TR	Hermetic	None	PS457 ☑
6	HOA1874-011	1	300u	20m	5 #	0.4	20m	3.05 *	3	60m	30	48	10u#	TR	Plastic;Two Tabs	None	PS457
7	HOA1881-011	1	300u	20m	5 #	400m	20m	3.18 *	3	60m	30	48	10u#	TR	Plastic;Two Tab	None	PS478
8	HOA1882-1	1	300u	20m	5.0	400m	20m	0.20	3.0	60m	30	4C	10u	TR		FA2h	PS4556
9	HOA1882-011	1	300u	20m	5.0 #			5.08 *				48		TR	Plastic;No Tab	None	PS475a ☑
10	HOA1883-011	1	300u	20m	5.0 #			3.56 *				48		TR	Plastic;No Tab	None	PS475b ☑
11	K8152	1	300u	20m		400m	20m	.080				48		TR	Interrupter	FA41	PS243d
12	K8162	1	300u	20m		400m	20m	.080				48		TR	Interrupter	None	PS244d
13	ON1109	1	0.3m	20m	10 #	0.3	50m		3.0	50m	30	3A%	6.0u	TR		FA23a	PS218a
14	ON1111	1	300u	20m	10 #	0.3	50m	118m	3.0	50m	30	28	6.0u	TR		FA23a	PS132g
15	ON1112	1	300u	20m	10 #	0.3	50m	118m	3.0	50m	30	28	6.0u	TR		FA23a	PS218d
16	ON1179	1	300u	20m	10 #	0.3	50m	118m	3.0	50m	30	28	6.0u	TR		FA23a	PS218d
17	OPB820S7	1	300uØ	20m	5.0 #	400m	20m	60m	2.0	20m				TR		None	PS243a
18	OPB821S7	1	300uØ	20m	5.0 #	400m	20m	60m	2.0	20m				TR		None	PS244a
19	SG23FF	1	300uØ	20m	5.0 #	400m	30m	3.0 *	5.0	60m	30	28	5.0u	TR	Pc 100mW	FA6	PS405 ☑
20	SG23FH	1	300uØ	20m	5.0 #	400m	30m	3.2 *	5.0	60m	30	28	5.0u	TR	Pc 100mW	FA6	PS406 ☑
21	SG23FI	1	300uØ	20m	5.0 #	400m	30m	3.1 *	5.0	60m	30	28	5.0u	TR	Pc 100mW	FA6	PS218h ☑
22	SG23FL	1	300uØ	20m	5.0 #	400m	30m	3.0 *	5.0	60m	30	28	5.0u	TR	Pc 100mW	FA6	PS405 ☑
23	SG23FT	1	300uØ	20m	5.0 #	400m	30m	3.1 *	5.0	60m	30	28	5.0u	TR	Pc 100mW	FA6	PS407 ☑
24	SG-DP01	1	300uØ	20m	5.0 #	400m	30m	3.0 *	5.0	60m	30	28	5.0u	TR	Pc 100mW	FA6	PS405 ☑
25	SG-DP02	1	300uØ	20m	5.0 #	400m	30m	3.2 *	5.0	60m	30	28	5.0u	TR	Pc 100mW	FA6	PS406 ☑
26	SG-DP03	1	300uØ	20m	5.0 #	400m	30m	3.1 *	5.0	60m	30	28	5.0u	TR	Pc 100mW	FA6	PS218h ☑
27	STCT0B	1	330u	40m	5.0	400m	50m	60m			25	48	25u#	TR		None	PS28 ☑
28	STCT1B	1	330u	40m	5.0	400m	50m	190m			25	48	25u#	TR		None	PS28a ☑
29	STCT2B	1	330u	40m	5.0	400m	50m	190m			25	48	25u#	TR		None	PS28a ☑
30	K8112	1	350u	20m		400m	20m	.125				48		TR	Interrupter	FA2e	PS4c
31	OPB813S7	1	350uØ	20m	10 #	400m	20m	125m	3.0	50m	30	58		TR		FA23	PS197a ☑
32	CLI800	1	400uØ	20m	5.0 #	400m	30m	125m	4.0	60m	30	5F%	5.0u#	TR	Switch	FA23a	PS132d
33	CLI800M	1	400uØ	20m	5.0 #	400m	20m	125m	4.0	60m	5.0	5F%	5.0u#	TR	Switch	FA23a	PS132d
34	CLI800W	1	400uØ	20m	5.0 #	400m	20m	125m	4.0	60m	30	5F%	5.0u#	TR	Switch	FA23a	PS297
35	CLI835	1	400uØ	20m	5.0 #	400m	20m	125m	4.0	60m	30	5F%	5.0u#	TR	Switch	FA23a	PS132d
36	CLI835M	1	400u	20m	5.0 #	400m	20m	125m	4.0	60m	5.0	5F%	5.0u#	TR	Switch	FA23a	PS132d
37	CLI835W	1	400u	20m	5.0 #	400m	20m	125m	4.0	60m	30	5F%	5.0u#	TR	Switch	FA23a	PS297
38	CLI836M	1	400uØ	20m	5.0 #	400m	20m	125m	4.0	60m	5.0	5F%	5.0u#	TR	SWITCH	FA23a	PS132d
39	CLI836W	1	400uØ	20m	5.0 #	400m	20m	125m	4.0	60m	5.0	5F%	5.0u#	TR	SWITCH	FA23a	PS297
40	CNY28	1	400u	20m	10 #	400m	20m	140m☑	3.0	60m	30	58	5.0u	TR	Interrupt	FA23a	PS4a ☑
41	HOA1879-011	1	400u	20m	5 #	400m	20m	3.18 *	3.0	60m	30	48	10u#	TR	Plastic;Two Tabs	None	PS197d
42	K8151	1	400u	20m		400m	20m	.080				48		TR	Interrupter	FA41	PS243c
43	K8161	1	400u	20m		400m	20m	.080				48		TR	Interrupter	None	PS244c
44	OPB821S12	1	400uØ	20m	5.0 #	400m	20m	60m	2.0	20m				TR		None	PS244
45	OPB870N51	1	400u	20m	10 #	0.4	20m	.060	3.0	50m	30	4A		TR		None	PS317b
46	OPB870N55	1	400u	20m	10 #	0.4	20m	.060	3.0	50m	30	4A		TR		None	PS317b
47	OPB870T51	1	400u	20m	10 #	0.4	20m	.060	3.0	50m	30	4A		TR		None	PS132d
48	OPB870T55	1	400u	20m	10 #	0.4	20m	.060	3.0	50m	30	4A		TR		None	PS132d
49	TLP517	1	400uØ	20m	5			118m	5.0	50m	30	28		TR		FA2d	PS4f
50	TLP801	1	0.4m	20m	5.0	0.4	20m	.12	5.	50m	30	28	6.u	TR		None ♦	PS371
51	OPB831S20	1	400u	25m	5.0 #	0.4	25m	.200	4.0	40m	30	48		TR	Dual Chann	FA38	None
52	ON1128S	1	450u☑	15m	10 #	0.5	25m	118m	3.0	25m	30	28	6.0u	TR		FA23b	PS218
53	SS755-10	1	500uØ	2.0m	1.5 #	1.0	10m	.125	6.0	60m		5A	45u	DA	Interrupter	FA20b	PS366
54	SS755-40	1	500uØ	2.0m	1.5 #	1.0	10m	.125	6.0	60m		5A	45u	DA	Interrupter	FA20b	PS366
55	SS765-10	1	500uØ	2.0m	1.5 #	1.0	10m	.125	6.0	60m		5A	45u	DA	Interrupter	FA20b	PS367
56	SS765-40	1	500uØ	2.0m	1.5 #	1.0	10m	.125	6.0	60m		5A	45u	DA	Interrupter	FA20b	PS367
57	VTL10E1	1	500u	2.0m	5.0 #	1.0	10m	3.2 *	2.0	40m	30	48		DA	TTL Comp	FA3d	PS389a
58	VTL10E1A	1	0.5m	2.0m	5.0	1.0	10m	.125	2.0	40m	30	48	150u	DA	Slot Sw ModA	None	None
59	VTL10E5	1	0.5m	2.0m	5.0	1.0	10m	.125	2.0	40m	30	48	150u	DA	Slot Sw Mod	None	None
60	VTL10E5A	1	0.5m	2.0m	5.0	1.0	10m	.125	2.0	40m	30	48	150u	DA	Slot Sw ModA	None	None
61	VTL10E5B	1	0.5m	2.0m	5.0	1.0	10m	.125	2.0	40m	30	48	150u	DA	Slot Sw ModB	None	None
62	VTL11E1	1	0.5m	2.0m	5.0	1.0	10m	.125	2.0	40m	30	48	150u	DA	Slot Sw Mod	None	None
63	VTL11E1A	1	0.5m	2.0m	5.0	1.0	10m	.125	2.0	40m	30	48	150u	DA	Slot Sw ModA	None	None
64	VTL11E1B	1	0.5m	2.0m	5.0	1.0	10m	.125	2.0	40m	30	48	150u	DA	Slot Sw ModB	None	None
65	VTL11E5	1	0.5m	2.0m	5.0	1.0	10m	.125	2.0	40m	30	48	150u	DA	Slot Sw Mod	None	None
66	VTL11E5A	1	0.5m	2.0m	5.0	1.0	10m	.125	2.0	40m	30	48	150u	DA	Slot Sw ModA	None	None
67	VTL11E5B	1	0.5m	2.0m	5.0	1.0	10m	.125	2.0	40m	30	48	150u	DA	Slot Sw ModB	None	None
68	VTL12E1	1	0.5m	2.0m	5.0	1.0	10m	.125	2.0	40m	30	48	150u	DA	Slot Sw Mod	None	None
69	VTL12E1A	1	0.5m	2.0m	5.0	1.0	10m	.125	2.0	40m	30	48	150u	DA	Slot Sw ModA	None	None
70	VTL12E1B	1	0.5m	2.0m	5.0	1.0	10m	.125	2.0	40m	30	48	150u	DA	Slot Sw ModB	None	None
71	VTL12E5	1	0.5m	2.0m	5.0	1.0	10m	.125	2.0	40m	30	48	150u	DA	Slot Sw Mod	None	None
72	VTL12E5A	1	0.5m	2.0m	5.0	1.0	10m	.125	2.0	40m	30	48	150u	DA	Slot Sw ModA	None	None
73	VTL12E5B	1	0.5m	2.0m	5.0	1.0	10m	.125	2.0	40m	30	48	150u	DA	Slot Sw ModB	None	None
74	VTL13E1	1	0.5m	2.0m	5.0	1.0	10m	.125	2.0	40m	30	48	150u	DA	Slot Sw Mod	None	None
75	VTL13E1A	1	0.5m	2.0m	5.0	1.0	10m	.125	2.0	40m	30	48	150u	DA	Slot Sw ModA	None	None
76	VTL13E1B	1	0.5m	2.0m	5.0	1.0	10m	.125	2.0	40m	30	48	150u	DA	Slot Sw ModB	None	None
77	VTL13E5	1	0.5m	2.0m	5.0	1.0	10m	.125	2.0	40m	30	48	150u	DA	Slot Sw Mod	None	None
78	VTL13E5A	1	0.5m	2.0m	5.0	1.0	10m	.125	2.0	40m	30	48	150u	DA	Slot Sw ModA	None	None
79	VTL13E5B	1	0.5m	2.0m	5.0	1.0	10m	.125	2.0	40m	30	48	150u	DA	Slot Sw ModB	None	None
80	VTL18E1	1	500u	2.0m	5.0 #	1.0	10m	3.2 *	2.0	40m	30	48		DA	TTL Comp	FA2c	PS389a
81	VTL18E5	1	500u	2.0m	5.0 #	1.0	10m	3.2 *	2.0	40m	30	48		DA	TTL Comp	FA3d	PS389a
82	CLI820	1	500u	5.0m	5.0 #	400m	30m	125m	4.0	60m	30	5F%	5.0u#	TR	Switch	FA23a	PS132d
83	CLI820M	1	500u	5.0m	5.0 #	400m	30m	125m	4.0	60m	5.0	5F%	5.0u#	TR	Switch	FA23a	PS132d
84	CLI820W	1	500u	5.0m	5.0 #	400m	30m	125m	4.0	60m	30	5F%	5.0u#	TR	Switch	FA23a	PS297
85	CLI821	1	500u	5.0m	5.0 #	500m	30m	125m	4.0	60m	55	5F%	5.0u#	TR	Switch	FA23a	PS132d
86	CLI821M	1	500u	5.0m	5.0 #	400m	30m	125m	4.0	60m	5.0	5F%	5.0u#	TR	SWITCH	FA23a	PS132d
87	CLI821W	1	500u	5.0m	5.0 #	400m	30m	125m	4.0	60m	5.0	5F%	5.0u#	TR	SWITCH	FA23a	PS297
88	CLI395	1	500uØ	10m	5.0 #	500m	20m	250m	3.0	60m	30	5A§	5.0u#	TR	IRED/NPN	FA34	PS1a ☑
89	STIN135D2	1	500u	10m	5.0	1.2	10m	125m			25	58	150u#	DA		None	PS87 ☑
90	CLI510	1	500uØ	20m	5.0 #	400m	20m	80m	4.0	60m	30	5F%	5.0u#	TR	Switch	FA23a	PS132d
91	HOA0825-001	1	500u	20m	500m#			4.2 *	3.0	60m	30	48		TR	Plastic;No Tab	FA23d	PS163a
92	HOA0825-002	1	500u	20m	500m#			4.2 *	3.0	60m	30	48		TR	Plastic	FA23d	PS450
93	HOA0825-003	1	500u	20m	500m#			4.2 *	3.0	60m	30	48		TR	Plastic;Two Tab	FA23d	PS451
94	HOA0825-004	1	500u	20m	500m#			4.2 *	3.0	60m	30	48		TR	Plastic	FA23d	PS452
95	HOA0860L51	1	500u	20m	10 #			3.18 *				48		TR	Plastic	None	PS453a
96	HOA0860L55	1	500u	20m	10 #			3.18 *				48		TR	Plastic	None	PS453a
97	HOA0860N51	1	500u	20m	10 #			3.18 *				48		TR	Plastic;No tab	None	PS475 ☑
98	HOA0860N55	1	500u	20m	10 #			3.18 *				48		TR	Plastic;No Tab	None	PS475 ☑
99	HOA0860P51	1	500u	20m	10 #			3.18 *				48		TR	Plastic;Det Tab	None	PS453c
100	HOA0860P55	1	500u	20m	10 #			3.18 *				48		TR	Plastic;Det Tab	None	PS453c
101	HOA0860T51	1	500u	20m	10 #			3.18 *				48		TR	Plastic;Two Tabs	None	PS457 ☑
102	HOA0860T55	1	500u	20m	10 #			3.18 *				48		TR	Plastic;Two Tabs	None	PS457 ☑
103	HOA0865L51	1	500u	20m	10 #			3.18 *				48		TR	Plastic	None	PS453a
104	HOA0865L55	1	500u	20m	10 #			3.18 *				48		TR	Plastic	None	PS453a
105	HOA0865N51	1	500u	20m	10 #			3.18 *				48		TR	Plastic;No Tab	None	PS475 ☑
106	HOA0865N55	1	500u	20m	10 #			3.18 *				48		TR	Plastic;No Tab	None	PS475 ☑
107	HOA0865P51	1	500u	20m	10 #			3.18 *				48		TR	Plastic;Det Tab	None	PS453c
108	HOA0865P55	1	500u	20m	10 #			3.18 *				48		TR	Plastic;Det Tab	None	PS453c
109	HOA0865T51	1	500u	20m	10 #			3.18 *				48		TR	Plastic;Two Tabs	None	PS457 ☑
110	HOA0865T55	1	500u	20m	10 #			3.18 *				48		TR	Plastic;Two Tabs	None	PS457 ☑

SYMBOLS AND CODES EXPLAINED IN INTERPRETER

19. GAP & REFLECTIVE SENSORS - Gap Detector (Cont'd)

IN ORDER OF FORM AND: (1) CHANNELS (2) OUTPUT CURRENT & (4) TYPE NUMBER

LINE No.	4 TYPE NUMBER	1 CHAN	2 DETECTOR OUTPUT CURRENT IC (A)	4 IF (A)	VCC (V)	MAX.DETECT. SAT. VOLT VCE(SAT) (V)	IF (A)	NOM. SEP. (in)	MAX. DIODE REV V VR (V)	MAX. DIODE FWD I IF (A)	MAX. C/E VOLT VCE (V)	TEMP RNG. CODE - +	RESP TIME (s)	TYPE OF O/P CKT	DESCRIPTION	SCHE-MATIC	DRAWING
1	HOA0870L51	1	500u	20m	10 #			3.18 *				48		TR	Plastic	None	PS453a
2	HOA0870L55	1	500u	20m	10 #			3.18 *				48		TR	Plastic	None	PS453a
3	HOA0870N51	1	500u	20m	10 #			3.18 *				48		TR	Plastic;No Tab	None	PS475 ☑
4	HOA0870N55	1	500u	20m	10 #			3.18 *				48		TR	Plastic;No Tab	None	PS475 ☑
5	HOA0870P51	1	500u	20m	10 #			3.18 *				48		TR	Plastic;Det Tab	None	PS453c
6	HOA0870P55	1	500u	20m	10 #			3.18 *				48		TR	Plastic;Det Tab	None	PS453c
7	HOA0870T51	1	500u	20m	10 #			3.18 *				48		TR	Plastic;Two Tabs	None	PS457 ☑
8	HOA0870T55	1	500u	20m	10 #			3.18 *				48		TR	Plastic;Two Tabs	None	PS457 ☑
9	HOA0875L51	1	500u	20m	10 #			3.18 *				48		TR	Plastic	None	PS453a
10	HOA0875L55	1	500u	20m	10 #			3.18 *				48		TR	Plastic	None	PS453a
11	HOA0875N51	1	500u	20m	10 #			3.18 *				48		TR	Plastic;No Tab	None	PS475 ☑
12	HOA0875N55	1	500u	20m	10 #			3.18 *				48		TR	Plastic;No Tab	None	PS475 ☑
13	HOA0875P51	1	500u	20m	10 #			3.18 *				48		TR	Plastic;Det Tab	None	PS453c
14	HOA0875P55	1	500u	20m	10 #			3.18 *				48		TR	Plastic;Det Tab	None	PS453c
15	HOA0875T51	1	500u	20m	10 #			3.18 *				48		TR	Plastic;Two Tabs	None	PS457 ☑
16	HOA0875T55	1	500u	20m	10 #			3.18 *				48		TR	Plastic;Two Tabs	None	PS457 ☑
17	HOA0880L51	1	500u	20m	10 #			3.18 *				48		TR	Emitter Tab	None	PS479
18	HOA0880L55	1	500u	20m	10 #			3.18 *				48		TR	Emitter Tab	None	PS479a
19	HOA0880N51	1	500u	20m	10 #			3.18 *				48		TR	Plastic;No Tab	None	PS476
20	HOA0880N55	1	500u	20m	10 #			3.18 *				48		TR	Plastic;No Tab	None	PS476a
21	HOA0880P51	1	500u	20m	10 #			3.18 *				48		TR	Detector Tab	None	PS480
22	HOA0880P55	1	500u	20m	10 #			3.18 *				48		TR	Detector Tab	None	PS480a
23	HOA0880T51	1	500u	20m	10 #			3.18 *				48		TR	Plastic;Two Tabs	None	PS477
24	HOA0880T55	1	500u	20m	10 #			3.18 *				48		TR	Plastic;Two Tabs	None	PS477a
25	HOA0890L51	1	500u	20m	10 #			3.18 *				48		TR	Emitter Tab	None	PS479
26	HOA0890L55	1	500u	20m	10 #			3.18 *				48		TR	Emitter Tab	None	PS479a
27	HOA0890N51	1	500u	20m	10 #			3.18 *				48		TR	Plastic;No Tab	None	PS476
28	HOA0890N55	1	500u	20m	10 #			3.18 *				48		TR	Plastic;No Tab	None	PS476a
29	HOA0890P51	1	500u	20m	10 #			3.18 *				48		TR	Detector Tab	None	PS480
30	HOA0890P55	1	500u	20m	10 #			3.18 *				48		TR	Detector Tab	None	PS480a
31	HOA0890T51	1	500u	20m	10 #			3.18 *				48		TR	Plastic;Two Tabs	None	PS477
32	HOA0890T55	1	500u	20m	10 #			3.18 *				48		TR	Plastic;Two Tabs	None	PS477a
33	HOA1879-015	1	500u	20m	5 #	0.4	20m	3.18 *	3	60m	30	48	10u#	TR	Plastic;Two Tabs	None	PS197
34	K8102	1	500u	20m		400m	20m	.125				48		TR	Interrupter	FA2e	PS4c
35	K8105	1	500u	20m		400m	20m	.125				48		TR	Interrupter	FA2	PS4c
36	K8110	1	500u	20m		400m	20m	.125				48		TR	Interrupter	FA2	PS4c
37	K8111	1	500u	20m		400m	20m	.125				48		TR	Interrupter	FA2e	PS4c
38	K8130	1	500u	20m		400m	20m	.100				48		TR	Interrupter	FA2	PS218c
39	K8140	1	500u	20m		400m	20m	.125				48		TR	Interrupter	FA2	PS4c
40	K8150	1	500u	20m		400m	20m	.080				48		TR	Interrupter	FA41	PS243g
41	K8160	1	500u	20m		400m	20m	.080				48		TR	Interrupter	None	PS244g
42	K8180	1	500u	20m		400m	20m	.125				48		TR	Interrupter	FA2e	PS4c
43	K8190	1	500u	20m		400m	20m	.100				48		TR	Interrupter	FA2	PS68
44	OPB804	1	500uØ	20m	10 #	400m	20m	.150	3.0	50m	30	5A	5.0u#	TR		FA23	PS68
45	OPB816	1	500uØ	20m	10 #	400m	20m	125m	3.0		30			TR		FA2a	PS132c
46	OPB820	1	500uØ	20m	5.0 #	400m	20m	60m	2.0	20m				TR		None	PS243
47	OPB820S12	1	500uØ	20m	5.0 #	0.4	20m	.375	3.0	3.0	30	4A		TR		None	PS243
48	OPB821	1	500uØ	20m	5.0 #	400m	20m	60m	2.0	20m				TR		None	PS244
49	OPB823	1	500u	20m	10 #	400m	20m	125m	3.0	50m	30	58		TR		FA2c	PS273
50	OPB823A	1	500uØ	20m	5.0 #	400m	20m	.125	3.0	50m	30	48		TR		FA2c	PS273
51	OPB825	1	500uØ	20m	500m#			140m		40m	30			TR		FA2a	PS163 ☑
52	OPB836	1	0.5m	20m	30 #	0.4	20m	.10	3.0	50m	30	48		TR		None ♦	PS316
53	OPB865L51	1	0.5m	20m	10 #	0.4	20m		3.0	50m	30	4A		TR		None	PS317
54	OPB865L55	1	0.5m	20m	10 #	0.4	20m		3.0	50m	30	4A		TR		None	PS317
55	OPB865N51	1	0.5m	20m	10 #	0.4	20m		3.0	50m	30	4A		TR		None	PS317b
56	OPB865N55	1	0.5m	20m	10 #	0.4	20m		3.0	50m	30	4A		TR		None	PS317b
57	OPB865P51	1	0.5m	20m	10 #	0.4	20m		3.0	50m	30	4A		TR		None	PS317a
58	OPB865P55	1	0.5m	20m	10 #	0.4	20m		3.0	50m	30	4A		TR		None	PS317a
59	OPB865T51	1	0.5m	20m	10 #	0.4	20m		3.0	50m	30	4A		TR		None	PS132d
60	OPB865T55	1	0.5m	20m	10 #	0.4	20m		3.0	50m	30	4A		TR		None	PS132d
61	OPB870L51	1	500u	20m	10 #	0.4	20m		3.0	50m	30	4A		TR		None	PS317
62	OPB870L55	1	500u	20m	10 #	0.4	20m		3.0	50m	30	4A		TR		None	PS317
63	OPB870P51	1	500u	20m	10 #	0.4	20m		3.0	50m	30	4A		TR		None	PS317a
64	OPB870P55	1	500u	20m	10 #	0.4	20m		3.0	50m	30	4A		TR		None	PS317a
65	OPB875L51	1	500u	20m	10 #	0.4	20m		3.0	50m	30	4A		TR		None	PS317
66	OPB875L55	1	500u	20m	10 #	0.4	20m		3.0	50m	30	4A		TR		None	PS317
67	OPB875N51	1	500u	20m	10 #	0.4	20m		3.0	50m	30	4A		TR		None	PS317b
68	OPB875N55	1	500u	20m	10 #	0.4	20m		3.0	50m	30	4A		TR		None	PS317b
69	OPB875P51	1	500u	20m	10 #	0.4	20m		3.0	50m	30	4A		TR		None	PS317a
70	OPB875P55	1	500u	20m	10 #	0.4	20m		3.0	50m	30	4A		TR		None	PS317a
71	OPB875T51	1	500u	20m	10 #	0.4	20m		3.0	50m	30	4A		TR		None	PS132d
72	OPB875T55	1	500u	20m	10 #	0.4	20m		3.0	50m	30	4A		TR		None	PS132d
73	TCST1000	1	500u	20m	5.0 #	400m	20m		6.0	60m	70	5A%	5.0u	TR	Min hFE1.25%	None	PS435c
74	TCST1300	1	500u	20m	5.0 #	400m	20m		6.0	60m	70	5A%	5.0u	TR	Min hFE1.25%	None	PS435b
75	TCST2000	1	500u	20m	5.0 #	400m	20m		6.0	60m	70	5A%	5.0u	TR	Min hFE1.25%	None	PS432c
76	TCST2300	1	500u	20m	5.0 #	400m	20m		6.0	60m	70	5A%	5.0u	TR	Min hFE1.25%	None	PS432b
77	TCST3000	1	500u	20m	5.0 #	400m	20m		6.0	60m	70	5A%	5.0u	TR	Min hFE1.25%	None	PS433c
78	TCST3300	1	500u	20m	5.0 #	400m	20m		6.0	60m	70	5A%	5.0u	TR	Min hFE1.25%	None	PS433b
79	TCST4000	1	500u	20m	5.0 #	400m	20m		6.0	60m	70	5A%	5.0u	TR	Min hFE1.25%	None	PS434c
80	TLP802	1	0.5m	20m	5.0	0.4	20m	.20	5.	50m	30	28	6.u	TR		None ♦	PS371
81	VTL10D1	1	500u	20m	5.0 #	0.4	20m	3.2 *	2.0	40m	30	48		TR	TTL Comp	FA2c	PS389a
82	VTL10D1A	1	0.5m	20m	5.0	400m	20m	.125	2.0	40m	30	48	5.0u	TR	Slot Sw ModA	None	None
83	VTL10D1B	1	0.5m	20m	5.0	400m	20m	.125	2.0	40m	30	48	5.0u	TR	Slot Sw ModB	None	None
84	VTL10D5	1	500u	20m	5.0 #	0.4	20m	3.2 *	2.0	40m	30	48		TR	TTL Comp	FA2c	PS389a
85	VTL10D5A	1	0.5m	20m	5.0	400m	20m	.125	2.0	40m	30	48	5.0u	TR	Slot Sw ModA	None	None
86	VTL10D5B	1	0.5m	20m	5.0	400m	20m	.125	2.0	40m	30	48	5.0u	TR	Slot Sw ModB	None	None
87	VTL10E1B	1	0.5m	20m	5.0	1.0	10m	.125	2.0	40m	30	48	5.0u	DA	Slot Sw ModB	None	None
88	VTL11D1	1	500u	20m	5.0 #	0.4	20m	3.2 *	2.0	40m	30	48		TR	TTL Comp	FA2c	PS389a
89	VTL11D1A	1	0.5m	20m	5.0	400m	20m	.125	2.0	40m	30	48	5.0u	TR	Slot Sw ModA	None	None
90	VTL11D1B	1	0.5m	20m	5.0	400m	20m	.125	2.0	40m	30	48	5.0u	TR	Slot Sw ModB	None	None
91	VTL11D5	1	500u	20m	5.0 #	0.4	20m	3.2 *	2.0	40m	30	48		TR	TTL Comp	FA2c	PS389a
92	VTL11D5A	1	0.5m	20m	5.0	400m	20m	.125	2.0	40m	30	48	5.0u	TR	Slot Sw ModA	None	None
93	VTL11D5B	1	0.5m	20m	5.0	400m	20m	.125	2.0	40m	30	48	5.0u	TR	Slot Sw ModB	None	None
94	VTL12D1	1	500u	20m	5.0 #	0.4	20m	3.2 *	2.0	40m	30	48		TR	TTL Comp	FA2c	PS389a
95	VTL12D1A	1	0.5m	20m	5.0	400m	20m	.125	2.0	40m	30	48	5.0u	TR	Slot Sw ModA	None	None
96	VTL12D1B	1	0.5m	20m	5.0	400m	20m	.125	2.0	40m	30	48	5.0u	TR	Slot Sw ModB	None	None
97	VTL12D5	1	500u	20m	5.0 #	0.4	20m	3.2 *	2.0	40m	30	48		TR	TTL Comp	FA2c	PS389a
98	VTL12D5A	1	0.5m	20m	5.0	400m	20m	.125	2.0	40m	30	48	5.0u	TR	Slot Sw ModA	None	None
99	VTL12D5B	1	0.5m	20m	5.0	400m	20m	.125	2.0	40m	30	48	5.0u	TR	Slot Sw ModB	None	None
100	VTL13D1	1	500u	20m	5.0 #	0.4	20m	3.2 *	2.0	40m	30	48		DA	TTL Comp	FA2c	PS389a
101	VTL13D1A	1	0.5m	20m	5.0	400m	20m	.125	2.0	40m	30	48	5.0u	TR	Slot Sw ModA	None	None
102	VTL13D1B	1	0.5m	20m	5.0	400m	20m	.125	2.0	40m	30	48	5.0u	TR	Slot Sw ModB	None	None
103	VTL13D5	1	500u	20m	5.0 #	0.4	20m	3.2 *	2.0	40m	30	48		TR	TTLComp	FA2c	PS389a
104	VTL13D5A	1	0.5m	20m	5.0	400m	20m	.125	2.0	40m	30	48	5.0u	TR	Slot Sw ModA	None	None
105	VTL13D5B	1	0.5m	20m	5.0	400m	20m	.125	2.0	40m	30	48	5.0u	TR	Slot Sw ModB	None	None
106	VTL18D1	1	500u	20m	5.0 #	0.4	20m	3.2 *	2.0	40m	30	48		TR	TTL Comp	FA2c	PS389a
107	VTL18D5	1	500u	20m	5.0 #	0.4	20m	3.2 *	2.0	40m	30	48		TR	TTL Comp	FA2c	PS389a
108	HOA1877-002	1	500uØ	30m	5 #	0.4	20m	9.53 *	3	50m	30	5C	10u#	TR	Hermetic	None	PS23
109	SS750-30	1	600uØ	5.0m	5.0 #	0.4	20m	.125	6.0	60m		5A	8.0u	TR	Interrupter	FA23a	PS366
110	SS750-60	1	600uØ	5.0m	5.0 #	0.4	20m	.125	6.0	60m		5A	8.0u	TR	Interrupter	FA23a	PS366

SYMBOLS AND CODES EXPLAINED IN INTERPRETER

19. GAP & REFLECTIVE SENSORS - Gap Detector (Cont'd)

IN ORDER OF FORM AND: (1) CHANNELS (2) OUTPUT CURRENT & (4) TYPE NUMBER

LINE No.	4 TYPE NUMBER	1 CHAN	2 DETECTOR OUTPUT CURRENT IC (A)	4 IF (A)	VCC (V)	MAX.DETECT. SAT. VOLT VCE(SAT) (V)	IF (A)	NOM. SEP. (in)	MAX. DIODE REV V VR (V)	MAX. DIODE FWD I IF (A)	MAX. C/E VOLT VCE (V)	TEMP RNG. CODE - +	RESP TIME (s)	TYPE OF O/P CKT	DESCRIPTION	SCHE-MATIC	DRAWING
1	SS760-30	1	600uØ	5.0m	5.0 #	0.4	20m	.125	6.0	60m		5A	8.0u	TR	Interrupter	FA23a	PS367
2	SS760-60	1	600uØ	5.0m	5.0 #	0.4	20m	.125	6.0	60m		5A	8.0u	TR	Interrupter	FA23a	PS367
3	HOA1875-002	1	600uØ	30m	5 #	0.4	20m	5.08 *	3	50m	30	5A	10u#	TR	Hermetic	None	PS21
4	HOA1876-002	1	600uØ	30m	5 #	0.4	20m	5.08 *	3	50m	30	5C	10u#	TR	Hermetic	None	PS22
5	ON1114	1	700uØ		10	0.3	50m	.118	3.0	50m	30	28	6.0u#	TR	PC MOUNT	FA23a	PS218d
6	STCT0C	1	700uØ	40m	5.0	400m	50m	60m			25	48	25u#	TR		None	PS28 ☑
7	STCT1C	1	700uØ	40m	5.0	400m	50m	190m			25	48	25u#	TR		None	PS28a ☑
8	STCT2C	1	700uØ	40m	5.0	400m	50m	190m			25	48	25u#	TR		None	PS28a ☑
9	VTL10E7	1	.75m	2.0m	5.0	1.0	10m	.125	2.0	40m	30	48	150u	DA	Slot Sw Mod	None	None
10	VTL10E7A	1	.75m	2.0m	5.0	1.0	10m	.125	2.0	40m	30	48	150u	DA	Slot Sw ModA	None	None
11	VTL10E7B	1	.75m	2.0m	5.0	1.0	10m	.125	2.0	40m	30	48	150u	DA	Slot Sw ModB	None	None
12	VTL11E7	1	.75m	2.0m	5.0	1.0	10m	.125	2.0	40m	30	48	150u	DA	Slot Sw Mod	None	None
13	VTL11E7A	1	.75m	2.0m	5.0	1.0	10m	.125	2.0	40m	30	48	150u	DA	Slot Sw ModA	None	None
14	VTL11E7B	1	.75m	2.0m	5.0	1.0	10m	.125	2.0	40m	30	48	150u	DA	Slot Sw ModB	None	None
15	VTL12E7	1	.75m	2.0m	5.0	1.0	10m	.125	2.0	40m	30	48	150u	DA	Slot Sw Mod	None	None
16	VTL12E7A	1	.75m	2.0m	5.0	1.0	10m	.125	2.0	40m	30	48	150u	DA	Slot Sw ModA	None	None
17	VTL12E7B	1	.75m	2.0m	5.0	1.0	10m	.125	2.0	40m	30	48	150u	DA	Slot Sw ModB	None	None
18	VTL13E7	1	.75m	2.0m	5.0	1.0	10m	.125	2.0	40m	30	48	150u	DA	SlotSwMod	None	None
19	VTL18E7	1	750u	2.0m	5.0 #	1.0	10m	3.2 *	2.0	40m	30	48		DA	TTL Comp	FA3d	PS389a
20	VTL10D7	1	.75m	20m	5.0	400m	20m	.125	2.0	40m	30	48	5.0u	TR	Slot Sw Mod	None	None
21	VTL10D7A	1	.75m	20m	5.0	400m	20m	.125	2.0	40m	30	48	5.0u	TR	Slot Sw ModA	None	None
22	VTL10D7B	1	.75m	20m	5.0	400m	20m	.125	2.0	40m	30	48	5.0u	TR	Slot Sw ModB	None	None
23	VTL11D7	1	750u	20m	5.0 #	0.4	20m	3.2 *	2.0	40m	30	48		TR	TTL Comp	FA2c	PS389a
24	VTL11D7A	1	.75m	20m	5.0	400m	20m	.125	2.0	40m	30	48	5.0u	TR	Slot Sw ModA	None	None
25	VTL11D7B	1	.75m	20m	5.0	400m	20m	.125	2.0	40m	30	48	5.0u	TR	Slot Sw ModB	None	None
26	VTL12D7	1	.75m	20m	5.0	400m	20m	.125	2.0	40m	30	48	5.0u	TR	Slot Sw Mod	None	None
27	VTL12D7A	1	.75m	20m	5.0	400m	20m	.125	2.0	40m	30	48	5.0u	TR	Slot Sw ModA	None	None
28	VTL12D7B	1	.75m	20m	5.0	400m	20m	.125	2.0	40m	30	48	5.0u	TR	Slot Sw ModB	None	None
29	VTL13D7	1	.75m	20m	5.0	400m	20m	.125	2.0	40m	30	48	5.0u	TR	Slot Sw Mod	None	None
30	VTL13D7A	1	.75m	20m	5.0	400m	20m	.125	2.0	40m	30	48	5.0u	TR	Slot Sw ModA	None	None
31	VTL13D7B	1	.75m	20m	5.0	400m	20m	.125	2.0	40m	30	48	5.0u	TR	Slot Sw ModB	None	None
32	VTL18D7	1	750u	20m	5.0 #	0.4	20m	3.2 *	2.0	40m	30	48		TR	TTL Comp	FA2c	PS389a
33	CNY37	1	800u	20m	10 #	400m	20m	120m	5.0	60m	32	28%		TR		FA6	PS4c ☑
34	STIN130T1	1	800u	40m	5.0	400m	50m	125m			25	07	5.0u#	TR		None	PS4b ☑
35	SS755-20	1	1.0mØ	2.0m	1.5 #	1.5	60m	.125	6.0	60m		5A	45u	DA	Interrupter	FA20b	PS366
36	SS755-50	1	1.0mØ	2.0m	1.5 #	1.5	60m	.125	6.0	60m		5A	45u	DA	Interrupter	FA20b	PS366
37	SS765-20	1	1.0mØ	2.0m	1.5 #	1.5	60m	.125	6.0	60m		5A	45u	DA	Interrupter	FA20b	PS367
38	SS765-50	1	1.0mØ	2.0m	1.5 #	1.5	60m	.125	6.0	60m		5A	45u	DA	Interrupter	FA20b	PS367
39	VTL10E2	1	1.0m	2.0m	5.0 #	1.0	10m	3.2 *	2.0	40m	30	48		DA	TTL Comp	FA3d	PS389a
40	VTL10E2A	1	1.0m	2.0m	5.0	1.0	10m	.125	2.0	40m	30	48	150u	DA	Slot Sw ModA	None	None
41	VTL11E2	1	1.0m	2.0m	5.0	1.0	10m	.125	2.0	40m	30	48	150u	DA	Slot Sw Mod	None	None
42	VTL11E2A	1	1.0m	2.0m	5.0	1.0	10m	.125	2.0	40m	30	48	150u	DA	Slot Sw ModA	None	None
43	VTL11E2B	1	1.0m	2.0m	5.0	1.0	10m	.125	2.0	40m	30	48	150u	DA	Slot Sw ModB	None	None
44	VTL12E2	1	1.0m	2.0m	5.0	1.0	10m	.125	2.0	40m	30	48	150u	DA	Slot Sw Mod	None	None
45	VTL12E2A	1	1.0m	2.0m	5.0	1.0	10m	.125	2.0	40m	30	48	150u	DA	Slot Sw ModA	None	None
46	VTL12E2B	1	1.0m	2.0m	5.0	1.0	10m	.125	2.0	40m	30	48	150u	DA	Slot Sw ModB	None	None
47	VTL13E2	1	1.0m	2.0m	5.0	1.0	10m	.125	2.0	40m	30	48	150u	DA	Slot Sw Mod	None	None
48	VTL13E2A	1	1.0m	2.0m	5.0	1.0	10m	.125	2.0	40m	30	48	150u	DA	Slot Sw ModA	None	None
49	VTL13E2B	1	1.0m	2.0m	5.0	1.0	10m	.125	2.0	40m	30	48	150u	DA	Slot Sw ModB	None	None
50	VTL18E2	1	1.0m	2.0m	5.0 #	1.0	10m	3.2 *	2.0	40m	30	48		DA	TTL Comp	FA3d	PS389a
51	CLI830	1	1.0m	5.0m	5.0 #	400m	30m	125m	4.0	60m	30	5F%	5.0u#	TR	Switch	FA23a	PS132d
52	CLI830M	1	1.0m	5.0m	5.0 #	400m	30m	125m	4.0	60m	5.0	5F%	5.0u#	TR	Switch	FA23a	PS132d
53	CLI830W	1	1.0m	5.0m	5.0 #	400m	30m	125m	4.0	60m	30	5F%	5.0u#	TR	Switch	FA23a	PS297
54	CLI831	1	1.0m	5.0m	5.0 #	500m	30m	125m	4.0	60m	55	5F%	5.0u#	TR	Switch	FA23a	PS132d
55	CLI831M	1	1.0m	5.0m	5.0 #	400m	30m	125m	4.0	60m	5.0	5F%	5.0u#	TR	SWITCH	FA23a	PS132d
56	CLI831W	1	1.0m	5.0m	5.0 #	400m	30m	125m	4.0	60m	5.0	5F%	5.0u#	TR	SWITCH	FA23a	PS297
57	CLI870M	1	1.0mØ	10m	1.5 #	1.0	20m	125m	4.0	60m	1.5	5F%	150u#	DA	Switch	FA23a	PS132d
58	CLI870W	1	1.0mØ	10m	1.5 #	1.0	20m	125m	4.0	60m	1.5	5F%	150u#	DA	Switch	FA23a	PS297
59	CLI871	1	1.0m	10m	1.5 #	1.2	20m	125m	4.0	60m	55	5F%	5.0u#	TR	Switch	FA23a	PS132d
60	CLI871M	1	1.0mØ	10m	1.5 #	1.0	20m	125m	4.0	60m	1.5	5F%	150u#	DA	Switch	FA23a	PS132d
61	CLI871W	1	1.0mØ	10m	1.5 #	1.0	20m	125m	4.0	60m	1.5	5F%	150u#	DA	Switch	FA23a	PS297
62	HOA0861L55	1	1.0m	10m	5.0 #			3.18 *				48		TR	Plastic	None	PS453a
63	HOA0861N55	1	1.0m	10m	5.0 #			3.18 *				48		TR	Plastic;No Tab	None	PS475 ☑
64	HOA0861P55	1	1.0m	10m	5.0 #			3.18 *				48		TR	Plastic;Det Tab	None	PS453c
65	HOA0861T55	1	1.0m	10m	5.0 #			3.18 *				48		TR	Plastic;Two Tabs	None	PS457 ☑
66	HOA0866L55	1	1.0m	10m	5.0 #			3.18 *				48		TR	Plastic	None	PS453a
67	HOA0866N55	1	1.0m	10m	5.0 #			3.18 *				48		TR	Plastic;No Tab	None	PS475 ☑
68	HOA0866P55	1	1.0m	10m	5.0 #			3.18 *				48		TR	Plastic;Det Tab	None	PS453c
69	HOA0866T55	1	1.0m	10m	5.0 #			3.18 *				48		TR	Plastic;Two Tabs	None	PS457 ☑
70	HOA0871L55	1	1.0m	10m	5.0 #			3.18 *				48		TR	Plastic	None	PS453a
71	HOA0871N55	1	1.0m	10m	5.0 #			3.18 *				48		TR	Plastic;No Tab	None	PS475 ☑
72	HOA0871P55	1	1.0m	10m	5.0 #			3.18 *				48		TR	Plastic;Det Tab	None	PS453c
73	HOA0876L55	1	1.0m	10m	5.0 #			3.18 *				48		TR	Plastic	None	PS453a
74	HOA0876N55	1	1.0m	10m	5.0 #			3.18 *				48		TR	Plastic;No Tab	None	PS475 ☑
75	HOA0876P55	1	1.0m	10m	5.0 #			3.18 *				48		TR	Plastic;Det Tab	None	PS453c
76	HOA0876T55	1	1.0m	10m	5.0 #			3.18 *				48		TR	Plastic;Two Tabs	None	PS457 ☑
77	HOA0881L55	1	1.0m	10m	5.0 #			3.18 *				48		TR	Emitter Tab	None	PS479a
78	HOA0881N55	1	1.0m	10m	5.0 #			3.18 *				48		TR	Plastic;No Tab	None	PS476a
79	HOA0881P55	1	1.0m	10m	5.0 #			3.18 *				48		TR	Detector Tab	None	PS480a
80	HOA0881T55	1	1.0m	10m	5.0 #			3.18 *				48		TR	Plastic;Two Tabs	None	PS477a
81	HOA0891L55	1	1.0m	10m	5.0 #			3.18 *				48		TR	Emitter Tab	None	PS479a
82	HOA0891N55	1	1.0m	10m	5.0 #			3.18 *				48		TR	Plastic;No Tab	None	PS476a
83	HOA0891P55	1	1.0m	10m	5.0 #			3.18 *				48		TR	Detector Tab	None	PS480a
84	HOA0891T55	1	1.0m	10m	5.0 #			3.18 *				48		TR	Plastic;Two Tabs	None	PS477a
85	OPB817	1	1.0mØ	10m	5.0 #	400m	250u	125m	3.0		30			TR		FA2a	PS132c
86	OPB861L51	1	1.0m	10m	5.0 #	0.4	10m		3.0	50m	30	4A		TR		None	PS317
87	OPB861L55	1	1.0m	10m	5.0 #	0.4	10m		3.0	50m	30	4A		TR		None	PS317
88	OPB861N51	1	1.0m	10m	5.0 #	0.4	10m		3.0	50m	30	4A		TR		None	PS317b
89	OPB861N55	1	1.0m	10m	5.0 #	0.4	10m		3.0	50m	30	4A		TR		None	PS317b
90	OPB861P51	1	1.0m	10m	5.0 #	0.4	10m		3.0	50m	30	4A		TR		None	PS317a
91	OPB861P55	1	1.0m	10m	5.0 #	0.4	10m		3.0	50m	30	4A		TR		None	PS317a
92	OPB861T51	1	1.0m	10m	5.0 #	0.4	10m		3.0	50m	30	4A		TR		None	PS132d
93	OPB861T55	1	1.0m	10m	5.0 #	0.4	10m		3.0	50m	30	4A		TR		None	PS132d
94	OPB866L51	1	1.0m	10m	5.0 #	0.4	10m		3.0	50m	30	4A		TR		None	PS317
95	OPB866L55	1	1.0m	10m	5.0 #	0.4	10m		3.0	50m	30	4A		TR		None	PS317
96	OPB866N51	1	1.0m	10m	5.0 #	0.4	10m		3.0	50m	30	4A		TR		None	PS317b
97	OPB866N55	1	1.0m	10m	5.0 #	0.4	10m		3.0	50m	30	4A		TR		None	PS317b
98	OPB866P51	1	1.0m	10m	5.0 #	0.4	10m		3.0	50m	30	4A		TR		None	PS317a
99	OPB866P55	1	1.0m	10m	5.0 #	0.4	10m		3.0	50m	30	4A		TR		None	PS317a
100	OPB866T51	1	1.0m	10m	5.0 #	0.4	10m		3.0	50m	30	4A		TR		None	PS132d
101	OPB866T55	1	1.0m	10m	5.0 #	0.4	10m		3.0	50m	30	4A		TR		None	PS132d
102	OPB871L51	1	1.0m	10m	5.0 #	0.4	10m		3.0	50m	30	4A		TR		None	PS317
103	OPB871L55	1	1.0m	10m	5.0 #	0.4	10m		3.0	50m	30	4A		TR		None	PS317
104	OPB871N51	1	1.0m	10m	5.0 #	0.4	10m		3.0	50m	30	4A		TR		None	PS317b
105	OPB871N55	1	1.0m	10m	5.0 #	0.4	10m		3.0	50m	30	4A		TR		None	PS317b
106	OPB871P51	1	1.0m	10m	5.0 #	0.4	10m		3.0	50m	30	4A		TR		None	PS317a
107	OPB871P55	1	1.0m	10m	5.0 #	0.4	10m		3.0	50m	30	4A		TR		None	PS317a
108	OPB871T51	1	1.0m	10m	5.0 #	0.4	10m		3.0	50m	30	4A		TR		None	PS132d
109	OPB871T55	1	1.0m	10m	5.0 #	0.4	10m		3.0	50m	30	4A		TR		None	PS132d
110	OPB876L51	1	1.0m	10m	5.0 #	0.4	10m		3.0	50m	30	4A		TR		None	PS317

SYMBOLS AND CODES EXPLAINED IN INTERPRETER

19. GAP & REFLECTIVE SENSORS - Gap Detector (Cont'd)

IN ORDER OF FORM AND: (1) CHANNELS (2) OUTPUT CURRENT & (4) TYPE NUMBER

LINE No.	4 TYPE NUMBER	1 CHAN	2 DETECTOR OUTPUT CURRENT IC (A)	4 IF (A)	VCC (V)	MAX.DETECT. SAT. VOLT VCE(SAT) (V)	IF (A)	NOM. SEP. (in)	MAX. DIODE REV V VR (V)	MAX. DIODE FWD I IF (A)	MAX. C/E VOLT VCE (V)	TEMP RNG. CODE - +	RESP TIME (s)	TYPE OF O/P CKT	DESCRIPTION	SCHE-MATIC	DRAWING
1	OPB876L55	1	1.0m	10m	5.0 #	0.4	10m		3.0	50m	30	4A		TR		None	PS317
2	OPB876N51	1	1.0m	10m	5.0 #	0.4	10m		3.0	50m	30	4A		TR		None	PS317b
3	OPB876N55	1	1.0m	10m	5.0 #	0.4	10m		3.0	50m	30	4A		TR		None	PS317b
4	OPB876P51	1	1.0m	10m	5.0 #	0.4	10m		3.0	50m	30	4A		TR		None	PS317a
5	OPB876P55	1	1.0m	10m	5.0 #	0.4	10m		3.0	50m	30	4A		TR		None	PS317a
6	OPB876T51	1	1.0m	10m	5.0 #	0.4	10m		3.0	50m	30	4A		TR		None	PS132d
7	OPB876T55	1	1.0m	10m	5.0 #	0.4	10m		3.0	50m	30	4A		TR		None	PS132d
8	PS4501(A)	1	1.0m	10m	2.0	.3	10m	3.0 *	5.0	50m	30	28			Phot Intrptr	CB45	PH349
9	STIN135D1	1	1.0m	10m	5.0	1.2	10m	125m			25	58	150u#	DA		None	PS87 ☑
10	CLI200	1	1.0mØ	20m	5.0 #	500m	20m	100m	3.0	60m	40	5F%	15u#	TR	Switch	FA23a	PS218c
11	CLI375	1	1.0mØ	20m	5.0 #	500m	20m	250m	3.0	60m	30	5A§	5.0u#	TR	IRED/NPN	FA2b	PS1a ☑
12	H21A1	1	1.0mØ	20m	5.0 #	400m	30m	125m	6.0	60m	30	5A	8.0u#	TR		FA23a	PS192 ☑
13	H21A4	1	1.0mØ	20m	5.0 #	400m	30m	125m	6.0	60m	55	5A	8.0u#	TR		FA23a	PS192 ☑
14	H22A1	1	1.0mØ	20m	5.0 #	400m	30m	125m	6.0	60m	30	5A	8.0u#	TR		FA23a	PS193 ☑
15	H22A4	1	1.0mØ	20m	5.0 #	400m	30m	125m	6.0	60m	55	5A	8.0u#	TR		FA23a	PS193 ☑
16	HOA0871T55	1	1.0m	20m	5.0 #			3.18 *				48		TR	Plastic;Two Tabs	None	PS457 ☑
17	HOA2762-002	1	1.0mØ	20m	5 #	0.4	20m	1.52 *	3	50m	30	5C	10u#	TR	Hermetic	None	PS461
18	K8103	1	1.0m	20m	10 #	400m	250u	.125						TR	Interrupter	FA2e	PS4c
19	K8120	1	1.0m	20m		400m	20m	.100				48		TR	Interrupter	FA2	PS218c
20	KU109-22	1	1.0m	20m	5.0 #	0.4	20m	3.0 *	4.0	50m	30	38	5.0u#	TR	Interrupter	None	PS344
21	KU110-22	1	1.0m	20m	5.0 #	0.4	20m	3.0 *	4.0	50m	30	38	5.0u#	TR	Interrupter	None	PS317
22	LTH301	1	1.0m	20m	5.0 #	0.4	20m	.205	3.0	50m	30	5A			Hsg	FA6	PS449
23	OPB824	1	1.0m	20m	10 #	400m	20m	125m	3.0	50m	30	58		TR		FA2c	PS273
24	OPB848	1	1.0mØ	20m	5.0 #	400m	20m	100m	2.0	20m				TR		None	None
25	OTS256	1	1.0mØ	20m	5.0 #	400m	30m	.125	6.0	60m	30	59§	8.0u#	TR	Interrupter	FA23b	PS193 ☑
26	SPI204	1	1.0mØ	20m		500m	50m	3.5 *			20	28		TR	Interrupter	None	PH345
27	TCST1001	1	1.0m	20m	5.0 #	400m	20m		6.0	60m	70	5A%	5.0u	TR	Min hFE2.5%	None	PS435c
28	TCST1301	1	1.0m	20m	5.0 #	400m	20m		6.0	60m	70	5A%	5.0u	TR	Min hFE2.5%	None	PS435b
29	TCST2001	1	1.0m	20m	5.0 #	400m	20m		6.0	60m	70	5A%	5.0u	TR	Min hFE2.5%	None	PS432c
30	TCST2301	1	1.0m	20m	5.0 #	400m	20m		6.0	60m	70	5A%	5.0u	TR	Min hFE2.5%	None	PS432b
31	TCST3001	1	1.0m	20m	5.0 #	400m	20m		6.0	60m	70	5A%	5.0u	TR	Min hFE2.5%	None	PS433c
32	TCST3301	1	1.0m	20m	5.0 #	400m	20m		6.0	60m	70	5A%	5.0u	TR	Min hFE2.5%	None	PS433b
33	TCST4001	1	1.0m	20m	5.0 #	400m	20m		6.0	60m	70	5A%	5.0u	TR	Min hFE2.5%	None	PS434c
34	VTL10D2	1	1.0m	20m	5.0 #	0.4	20m	3.2 *	2.0	40m	30	48		TR	TTL Comp	FA2c	PS389a
35	VTL10D2A	1	1.0m	20m	5.0	400m	20m	.125	2.0	40m	30	48	5.0u	TR	Slot Sw ModA	None	None
36	VTL10D2B	1	1.0m	20m	5.0	400m	20m	.125	2.0	40m	30	48	5.0u	TR	Slot Sw ModB	None	None
37	VTL10E2B	1	1.0m	20m	5.0	1.0	10m	.125	2.0	40m	30	48	5.0u	DA	Slot Sw ModB	None	None
38	VTL11D2	1	1.0m	20m	5.0 #	0.4	20m	3.2 *	2.0	40m	30	48		TR	TTL Comp	FA2c	PS389a
39	VTL11D2A	1	1.0m	20m	5.0	400m	20m	.125	2.0	40m	30	48	5.0u	TR	Slot Sw ModA	None	None
40	VTL11D2B	1	1.0m	20m	5.0	400m	20m	.125	2.0	40m	30	48	5.0u	TR	Slot Sw ModB	None	None
41	VTL12D2	1	1.0m	20m	5.0 #	0.4	20m	3.2 *	2.0	40m	30	48		TR	TTL Comp	FA2c	PS389a
42	VTL12D2A	1	1.0m	20m	5.0	400m	20m	.125	2.0	40m	30	48	5.0u	TR	Slot Sw ModA	None	None
43	VTL12D2B	1	1.0m	20m	5.0	400m	20m	.125	2.0	40m	30	48	5.0u	TR	Slot Sw ModB	None	None
44	VTL13D2	1	1.0m	20m	5.0 #	0.4	20m	3.2 *	2.0	40m	30	48		TR	TTL Comp	FA2c	PS389a
45	VTL13D2A	1	1.0m	20m	5.0	400m	20m	.125	2.0	40m	30	48	5.0u	TR	Slot Sw ModA	None	None
46	VTL13D2B	1	1.0m	20m	5.0	400m	20m	.125	2.0	40m	30	48	5.0u	TR	Slot Sw ModB	None	None
47	VTL18D2	1	1.0m	20m	5.0 #	0.4	20m	3.2 *	2.0	40m	30	48		TR	TTL Comp	FA2c	PS389a
48	OS521-060	1	1.0m	35m	5.0	550m	35m	60m	3.0	40m	20	07☑	25u#	TR		FA6	PS28 ☑
49	OS521-060L	1	1.0m	35m	5.0	550m	35m	60m	3.0	40m	20	07☑	25u#	TR		FA6	PS28a ☑
50	OS521-060LW	1	1.0m	35m	5.0	550m	35m	60m	3.0	40m	20	07☑	25u#	TR		FA6	PS28a ☑
51	OS521-060W	1	1.0m	35m	5.0	550m	35m	60m	3.0	40m	20	07☑	25u#	TR		FA6	PS28 ☑
52	OS521-200	1	1.0m	35m	5.0	550m	35m	200m	3.0	40m	20	07☑		TR		FA6	PS28 ☑
53	OS521-200L	1	1.0m	35m	5.0	550m	35m	200m	3.0	40m	20	07☑		TR		FA6	PS28a ☑
54	OS521-200LW	1	1.0m	35m	5.0	550m	35m	200m	3.0	40m	20	07☑		TR		FA6	PS28a ☑
55	OS521-200W	1	1.0m	35m	5.0	550m	35m	200m	3.0	40m	20	07☑		TR		FA6	PS28 ☑
56	OS522-060L	1	1.0m	35m	5.0	550m	35m	60m	3.0	40m	20	07☑	25u#	TR	Dual Channel	FA9 #	PS28a ☑
57	OS522-060LW	1	1.0m	35m	5.0	550m	35m	60m	3.0	40m	20	07☑	25u#	TR	Dual Channel	FA9 #	PS28a ☑
58	OS522-200L	1	1.0m	35m	5.0	550m	35m	200m	3.0	40m	20	07☑		TR	Dual Channel	FA9 #	PS28a ☑
59	OS522-200LW	1	1.0m	35m	5.0	550m	35m	200m	3.0	40m	20	07☑		TR	Dual Channel	FA9 #	PS28a ☑
60	ON1102	1	1.0m	50m		400m	50m		3.0	50m	30	28		TR		FA23a	PS4e
61	ON1108	1	1.0m	50m		400m	50m		3.0	50m	30	3A%	60u	TR		FA23a	PS218
62	MCA81	1	1.2m	16m	5.0 #	1.0	50m	.100	3.0	60m	30	5A	150u	TR	CTR 20m	FA3	PS4 ☑
63	KU107-01	1	1.5m	10m	5.0 #	0.4	10m	3.0 *	4.0	30m	30	38	6.0u#	TR	Interrupter	None	PS317b
64	OPB835	1	1.5m	20m	30 #	0.4	26m	.15	3.0	50m	30	48		TR		None	PH296
65	HOA1877-003	1	1.5mØ	30m	5 #	1.1	20m	9.53 *	3	50m	15	5C	500u#	DA	Hermetic	None	PS23
66	OPB806	1	1.6mØ	35m	5.0 #	500m	15m	125m	3.0	50m	30	5A	2.5u#	TR		None	PS2a ☑
67	STIN140T1	1	1.6m	35m	500m			330m			50	48	3.0u#	TR		None	PS2 ☑
68	STCD0A	1	1.6m	40m	5.0	1.0	50m	60m			25	48	150u#	DA		None	PS28 ☑
69	STCD1A	1	1.6m	40m	5.0	1.0	50m	60m			25	48	150u#	DA		None	PS28 ☑
70	STCD2A	1	1.6m	40m	5.0	1.0	50m	60m			25	48	150u#	DA		None	PS28 ☑
71	HOA0862L55	1	1.8m	20m	600m#			3.18 *				48		TR	Plastic	None	PS453a
72	HOA0862N55	1	1.8m	20m	600m#			3.18 *				48		TR	Plastic;No Tab	None	PS475 ☑
73	HOA0862P55	1	1.8m	20m	600m#			3.18 *				48		TR	Plastic;Det Tab	None	PS453c
74	HOA0862T55	1	1.8m	20m	600m#			3.18 *				48		TR	Plastic;Two Tabs	None	PS457 ☑
75	HOA0867L55	1	1.8m	20m	600m#			3.18 *				48		TR	Plastic	None	PS453a
76	HOA0867N55	1	1.8m	20m	600m#			3.18 *				48		TR	Plastic;No Tab	None	PS475 ☑
77	HOA0867P55	1	1.8m	20m	600m#			3.18 *				48		TR	Plastic;Det Tab	None	PS453c
78	HOA0867T55	1	1.8m	20m	600m#			3.18 *				48		TR	Plastic;Two Tabs	None	PS457 ☑
79	HOA0872L55	1	1.8m	20m	600m#			3.18 *				48		TR	Plastic	None	PS453a
80	HOA0872N55	1	1.8m	20m	600m#			3.18 *				48		TR	Plastic;No Tab	None	PS475 ☑
81	HOA0872P55	1	1.8m	20m	600m#			3.18 *				48		TR	Plastic;Det Tab	None	PS453c
82	HOA0872T55	1	1.8m	20m	600m#			3.18 *				48		TR	Plastic;Two Tabs	None	PS457 ☑
83	HOA0877L55	1	1.8m	20m	600m#			3.18 *				48		TR	Plastic	None	PS453a
84	HOA0877N55	1	1.8m	20m	600m#			3.18 *				48		TR	Plastic;No Tab	None	PS475 ☑
85	HOA0877P55	1	1.8m	20m	600m#			3.18 *				48		TR	Plastic;Det Tab	None	PS453c
86	HOA0877T55	1	1.8m	20m	600m#			3.18 *				48		TR	Plastic;Two Tabs	None	PS457 ☑
87	HOA0882L55	1	1.8m	20m	400m#			3.18 *				48		TR	Emitter Tab	None	PS479a
88	HOA0882N55	1	1.8m	20m	400m#			3.18 *				48		TR	Plastic;No Tab	None	PS476a
89	HOA0882P55	1	1.8m	20m	400m#			3.18 *				48		TR	Detector Tab	None	PS480a
90	HOA0882T55	1	1.8m	20m	400m#			3.18 *				48		TR	Plastic;Two Tabs	None	PS477a
91	HOA0892L55	1	1.8m	20m	400m#			3.18 *				48		TR	Emitter Tab	None	PS479a
92	HOA0892N55	1	1.8m	20m	400m#			3.18 *				48		TR	Plastic;No Tab	None	PS476a
93	HOA0892P55	1	1.8m	20m	400m#			3.18 *				48		TR	Detector Tab	None	PS480a
94	HOA0892T55	1	1.8m	20m	400m#			3.18 *				48		TR	Plastic;Two Tabs	None	PS477a
95	HOA1872-002	1	1.8mØ	20m	5 #	0.4	20m	2.54 *	3	50m	30	5A	10u#	TR	Hermetic	None	PS455
96	HOA1872-012	1	1.8m	20m	5 #	0.4	20m	2.54 *	3	60m	30	48	10u#	TR	Plastic;No Tab	None	PS455a ☑
97	HOA1873-002	1	1.8mØ	20m	5 #	0.4	20m	2.54 *	3	50m	30	5C	10u#	TR	Hermetic	None	PS456
98	HOA1873-012	1	1.8m	20m	5 #	0.4	20m	2.54 *	3	60m	30	48	10u#	TR	Plastic;Two Tabs	None	PS456
99	HOA1874-002	1	1.8mØ	20m	5 #	0.4	20m	3.05 *	3	50m	30	5C	10u#	TR	Hermetic	None	PS457 ☑
100	HOA1874-012	1	1.8m	20m	5 #	0.4	20m	3.05 *	3	60m	30	48	10u#	TR	Plastic;Two Tabs	None	PS457
101	HOA1878-012	1	1.8m	20m	5 #	0.4	20m	3.18 *	3	60m	30	48	10u#	TR	Plastic;Two Tabs	None	PS458
102	HOA1879-012	1	1.8m	20m	5 #	0.4	10m	3.18 *	3	60m	30	48	10u#	TR	Plastic;Two Tabs	None	PS197d
103	HOA1881-012	1	1.8m	20m	5 #	400m	20m	3.18 *	3	60m	30	48	10u#	TR	Plastic;Two Tabs	None	PS478
104	HOA1882-2	1	1.8m	20m	5.0	400m	20m	0.20	3.0	60m	30	4C	10u	TR		FA2h	PS4556
105	HOA1882-012	1	1.8m	20m	5.0 #			5.08 *				48		TR	Plastic;No Tab	None	PS475a ☑
106	HOA1883-012	1	1.8m	20m	5.0 #			3.56 *				48		TR	Plastic;No Tab	None	PS475b ☑
107	HOA2862-002	1	1.8mØ	20m	5 #	0.4	20m	2.54 *	3	50m	30	5A	10u#	TR	Hermetic	None	PS462
108	K8100	1	1.8m	20m		600m	20m	.125				48		TR	Interrupter	FA2	PS4c
109	K8101	1	1.8m	20m		600m	20m	.125				48		TR	Interrupter	FA2e	PS4c
110	K8121	1	1.8m	20m		600m	20m	.100				48		TR	Interrupter	FA2	PS218c

SYMBOLS AND CODES EXPLAINED IN INTERPRETER

19. GAP & REFLECTIVE SENSORS - Gap Detector (Cont'd)

IN ORDER OF FORM AND: (1) CHANNELS (2) OUTPUT CURRENT & (4) TYPE NUMBER

LINE No.	[4] TYPE NUMBER	[1] CHAN	[2] DETECTOR OUTPUT CURRENT IC (A)	[4] IF (A)	VCC (V)	MAX.DETECT. SAT. VOLT VCE(SAT) (V)	IF (A)	NOM. SEP. (in)	MAX. DIODE REV V VR (V)	MAX. DIODE FWD I IF (A)	MAX. C/E VOLT VCE (V)	TEMP RNG. CODE - +	RESP TIME (s)	TYPE OF O/P CKT	DESCRIPTION	SCHE-MATIC	DRAWING
1	K8141	1	1.8m	20m		600m	20m	.125				48		TR	Interrupter	FA2	PS4c
2	K8155	1	1.8m	20m		600m	20m	.080				48		TR	Interrupter	FA41	PS243g
3	K8165	1	1.8m	20m		600m	20m	.080				48		TR	Interrupter	None	PS244g
4	K8171	1	1.8m	20m		600m	20m	.125				48		TR	Interrupter	FA2c	PS273
5	K8181	1	1.8m	20m		600m	20m	.125				48		TR	Interrupter	FA2e	PS4c
6	K8191	1	1.8m	20m		600m	20m	.100				48		TR	Interrupter	FA2	PS68
7	OPB862L51	1	1.8m	20m	0.6 #	0.6	20m		3.0	50m	30	4A		TR		None	PS317
8	OPB862L55	1	1.8m	20m	0.6 #	0.6	20m		3.0	50m	30	4A		TR		None	PS317
9	OPB862N51	1	1.8m	20m	0.6 #	0.6	20m		3.0	50m	30	4A		TR		None	PS317b
10	OPB862N55	1	1.8m	20m	0.6 #	0.6	20m		3.0	50m	30	4A		TR		None	PS317b
11	OPB862P51	1	1.8m	20m	0.6 #	0.6	20m		3.0	50m	30	4A		TR		None	PS317a
12	OPB862P55	1	1.8m	20m	0.6 #	0.6	20m		3.0	50m	30	4A		TR		None	PS317a
13	OPB862T51	1	1.8m	20m	0.6 #	0.6	20m		3.0	50m	30	4A		TR		None	PS132d
14	OPB862T55	1	1.8m	20m	0.6 #	0.6	20m		3.0	50m	30	4A		TR		None	PS132d
15	OPB867L51	1	1.8m	20m	0.6 #	0.6	20m		3.0	50m	30	4A		TR		None	PS317
16	OPB867L55	1	1.8m	20m	0.6 #	0.6	20m		3.0	50m	30	4A		TR		None	PS317
17	OPB867N51	1	1.8m	20m	0.6 #	0.6	20m		3.0	50m	30	4A		TR		None	PS317b
18	OPB867N55	1	1.8m	20m	0.6 #	0.6	20m		3.0	50m	30	4A		TR		None	PS317b
19	OPB867P51	1	1.8m	20m	0.6 #	0.6	20m		3.0	50m	30	4A		TR		None	PS317a
20	OPB867P55	1	1.8m	20m	0.6 #	0.6	20m		3.0	50m	30	4A		TR		None	PS317a
21	OPB867T51	1	1.8m	20m	0.6 #	0.6	20m		3.0	50m	30	4A		TR		None	PS132d
22	OPB867T55	1	1.8m	20m	0.6 #	0.6	20m		3.0	50m	30	4A		TR		None	PS132d
23	OPB872L51	1	1.8m	20m	0.6 #	0.6	20m		3.0	50m	30	4A		TR		None	PS317
24	OPB872L55	1	1.8m	20m	0.6 #	0.6	20m		3.0	50m	30	4A		TR		None	PS317
25	OPB872N51	1	1.8m	20m	0.6 #	0.6	20m		3.0	50m	30	4A		TR		None	PS317b
26	OPB872N55	1	1.8m	20m	0.6 #	0.6	20m		3.0	50m	30	4A		TR		None	PS317b
27	OPB872P51	1	1.8m	20m	0.6 #	0.6	20m		3.0	50m	30	4A		TR		None	PS317a
28	OPB872P55	1	1.8m	20m	0.6 #	0.6	20m		3.0	50m	30	4A		TR		None	PS317a
29	OPB872T51	1	1.8m	20m	0.6 #	0.6	20m		3.0	50m	30	4A		TR		None	PS132d
30	OPB872T55	1	1.8m	20m	0.6 #	0.6	20m		3.0	50m	30	4A		TR		None	PS132d
31	OPB877L51	1	1.8m	20m	0.6 #	0.6	20m		3.0	50m	30	4A		TR		None	PS317
32	OPB877L55	1	1.8m	20m	0.6 #	0.6	20m		3.0	50m	30	4A		TR		None	PS317
33	OPB877N51	1	1.8m	20m	0.6 #	0.6	20m		3.0	50m	30	4A		TR		None	PS317b
34	OPB877N55	1	1.8m	20m	0.6 #	0.6	20m		3.0	50m	30	4A		TR		None	PS317b
35	OPB877P51	1	1.8m	20m	0.6 #	0.6	20m		3.0	50m	30	4A		TR		None	PS317a
36	OPB877P55	1	1.8m	20m	0.6 #	0.6	20m		3.0	50m	30	4A		TR		None	PS317a
37	OPB877T51	1	1.8m	20m	0.6 #	0.6	20m		3.0	50m	30	4A		TR		None	PS132d
38	OPB877T55	1	1.8m	20m	0.6 #	0.6	20m		3.0	50m	30	4A		TR		None	PS132d
39	HOA1875-003	1	1.8mØ	30m	5 #	1.1	20m	5.08 *	3	50m	15	5C	500u#	DA	Hermetic	None	PS21
40	HOA1876-003	1	1.8mØ	30m	5 #	1.1	20m	5.08 *	3	50m	15	5C	500u#	DA	Hermetic	None	PS22
41	MOC70K1	1	1.9mØ	30m	5.0 #	400m	30m	.120	6.0	50m	30	48§	12u	TR		FA23a	PS437
42	MOC70T1	1	1.9mØ	30m	5.0 #	400m	30m	.115	6.0	50m	30	48§	12u	TR		FA23a	PS192
43	MOC70U1	1	1.9mØ	30m	5.0 #	400m	30m	.115	6.0	50m	30	48§	12u	TR		FA23a	PS193
44	SS755-30	1	2.0mØ	2.0m	1.5 #	1.5	60m	.125	6.0	60m		5A	45u	DA	Interrupter	FA20b	PS366
45	SS755-60	1	2.0mØ	2.0m	1.5 #	1.5	60m	.125	6.0	60m		5A	45u	DA	Interrupter	FA20b	PS366
46	SS765-30	1	2.0mØ	2.0m	1.5 #	1.5	60m	.125	6.0	60m		5A	45u	DA	Interrupter	FA20b	PS367
47	SS765-60	1	2.0mØ	2.0m	1.5 #	1.5	60m	.125	6.0	60m		5A	45u	DA	Interrupter	FA20b	PS367
48	VTL10E3	1	2.0m	2.0m	5.0 #	1.0	10m	3.2 *	2.0	40m	30	48		DA	TTL Comp	FA3d	PS389a
49	VTL10E3A	1	2.0m	2.0m	5.0	1.0	10m	.125	2.0	40m	30	48	150u	DA	Slot Sw ModA	None	None
50	VTL10E3B	1	2.0m	2.0m	5.0	1.0	10m	.125	2.0	40m	30	48	150u	DA	Slot Sw ModB	None	None
51	VTL11E3	1	2.0m	2.0m	5.0	1.0	10m	.125	2.0	40m	30	48	150u	DA	Slot Sw Mod	None	None
52	VTL11E3A	1	2.0m	2.0m	5.0	1.0	10m	.125	2.0	40m	30	48	150u	DA	Slot Sw ModA	None	None
53	VTL11E3B	1	2.0m	2.0m	5.0	1.0	10m	.125	2.0	40m	30	48	150u	DA	Slot Sw ModB	None	None
54	VTL12E3	1	2.0m	2.0m	5.0	1.0	10m	.125	2.0	40m	30	48	150u	DA	Slot Sw Mod	None	None
55	VTL12E3A	1	2.0m	2.0m	5.0	1.0	10m	.125	2.0	40m	30	48	150u	DA	Slot Sw ModA	None	None
56	VTL12E3B	1	2.0m	2.0m	5.0	1.0	10m	.125	2.0	40m	30	48	150u	DA	Slot Sw ModB	None	None
57	VTL13E3	1	2.0m	2.0m	5.0	1.0	10m	.125	2.0	40m	30	48	150u	DA	Slot Sw Mod	None	None
58	VTL13E3A	1	2.0m	2.0m	5.0	1.0	10m	.125	2.0	40m	30	48	150u	DA	Slot Sw ModA	None	None
59	VTL13E3B	1	2.0m	2.0m	5.0	1.0	10m	.125	2.0	40m	30	48	150u	DA	Slot Sw ModB	None	None
60	VTL18E3	1	2.0m	2.0m	5.0 #	1.0	10m	3.2 *	2.0	40m	30	48		DA	TTL Comp	FA3d	PS389a
61	CLI610	1	2.0mØ	5.0m	5.0	1.0	20m	276m	4.0	60m	30	5F%	5.0u#	TR	IRED/NPN	CB45	PS471 ☑
62	H21B4	1	2.0mØ	10m	1.5 #	1.0	10m	125m	6.0	60m	55	5A	45u#	DA		FA20b	PS192 ☑
63	H22B4	1	2.0mØ	10m	1.5 #	1.0	10m	125m	6.0	60m	55	5A	45u#	DA		FA20b	PS193 ☑
64	ON1104	1	2.0m	10m	5.0 #	1.2	20m	118m	3.0	50m	30	28	100u	DA		FA20b	PS4e
65	CLI230	1	2.0mØ	20m	5.0 #	1.0	20m	100m	3.0	60m	40	5F%		DA	Switch	FA20b	PS218c
66	GP1S01	1	2.0m	20m	5.0	35	50m	118m	6.0	50m	35	28	3.0u	TR	High Speed	FA2e	PS344
67	H21A2	1	2.0mØ	20m	5.0 #	400m	20m	125m	6.0	60m	30	5A	8.0u#	TR		FA23a	PS192 ☑
68	H21A5	1	2.0mØ	20m	5.0 #	400m	20m	125m	6.0	60m	55	5A	8.0u#	TR		FA23a	PS192 ☑
69	H22A2	1	2.0mØ	20m	5.0 #	400m	20m	125m	6.0	60m	30	5A	8.0u#	TR		FA23a	PS193 ☑
70	H22A5	1	2.0mØ	20m	5.0 #	400m	20m	125m	6.0	60m	55	5A	8.0u#	TR		FA23a	PS193 ☑
71	HOA1870-033	1	2.0m	20m	5 #	1.1	20m	1.78 *	3	60m	30	48	500u#	DA	Plastic	None ♦	PS244h
72	HOA2762-003	1	2.0mØ	20m	5 #	1.1	20m	1.52 *	3	50m	15	5C	500u#	DA	Hermetic	None	PS461
73	SPI206	1	2.0mØ	20m		500m	50m	3.0 *			20	28		TR	Interrupter	None	PH345a
74	SPI208	1	2.0mØ	20m		500m	50m	3.0 *			20	28		TR	Interrupter	None	PS4g
75	TCST1202	1	2.0m	20m	5.0 #	400m	20m		6.0	60m	70	5A%	5.0u	TR	Min hFE 5%	None	PS435
76	TCST2202	1	2.0m	20m	5.0 #	400m	20m		6.0	60m	70	5A%	5.0u	TR	Min hFE5%	None	PS432a
77	TCST3202	1	2.0m	20m	5.0 #	400m	20m		6.0	60m	70	5A%	5.0u	TR	Min hFE5%	None	PS433a
78	TLP800	1	2.0m	20m	5.0			.12	5.	50m	30	28	5m*	TR		None ♦	PS373
79	VTL10D3	1	2.0m	20m	5.0 #	0.4	20m	3.2 *	2.0	40m	30	48		TR	TTL Comp	FA2c	PS389a
80	VTL10D3A	1	2.0m	20m	5.0	400m	20m	.125	2.0	40m	30	48	5.0u	TR	Slot Sw ModA	None	None
81	VTL10D3B	1	2.0m	20m	5.0	400m	20m	.125	2.0	40m	30	48	5.0u	TR	Slot Sw ModB	None	None
82	VTL11D3	1	2.0m	20m	5.0 #	0.6	20m	3.2 *	2.0	40m	30	48		TR	TTL Comp	FA2c	PS389a
83	VTL11D3A	1	2.0m	20m	5.0	400m	20m	.125	2.0	40m	30	48	5.0u	TR	Slot Sw ModA	None	None
84	VTL11D3B	1	2.0m	20m	5.0	400m	20m	.125	2.0	40m	30	48	5.0u	TR	Slot Sw ModB	None	None
85	VTL12D3	1	2.0m	20m	5.0 #	0.6	20m	3.2 *	2.0	40m	30	48		TR	TTL Comp	FA2c	PS389a
86	VTL12D3A	1	2.0m	20m	5.0	400m	20m	.125	2.0	40m	30	48	5.0u	TR	Slot Sw ModA	None	None
87	VTL12D3B	1	2.0m	20m	5.0	400m	20m	.125	2.0	40m	30	48	5.0u	TR	Slot Sw ModB	None	None
88	VTL13D3	1	2.0m	20m	5.0 #	0.6	20m	3.2 *	2.0	40m	30	48		TR	TTL Comp	FA2c	PS389a
89	VTL13D3A	1	2.0m	20m	5.0	400m	20m	.125	2.0	40m	30	48	5.0u	TR	Slot Sw ModA	None	None
90	VTL13D3B	1	2.0m	20m	5.0	400m	20m	.125	2.0	40m	30	48	5.0u	TR	Slot Sw ModB	None	None
91	VTL18D3	1	2.0m	20m	5.0 #	0.6	20m	3.2 *	2.0	40m	30	48		TR	TTL Comp	FA2c	PS389a
92	OS581-060	1	2.0m	35m	5.0	1.0	35m	60m	3.0	40m	20	07☑	150u#	DA		FA20	PS28 ☑
93	OS581-060L	1	2.0m	35m	5.0	1.0	35m	60m	3.0	40m	20	07☑	150u#	DA		FA20	PS28a ☑
94	OS581-060LW	1	2.0m	35m	5.0	1.0	35m	60m	3.0	40m	20	07☑	150u#	DA		FA20	PS28a ☑
95	OS581-060W	1	2.0m	35m	5.0	1.0	35m	60m	3.0	40m	20	07☑	150u#	DA		FA20	PS28 ☑
96	OS581-200	1	2.0m	35m	5.0	1.0	35m	200m	3.0	40m	20	07☑		DA		FA20	PS28 ☑
97	OS581-200L	1	2.0m	35m	5.0	1.0	35m	200m	3.0	40m	20	07☑		DA		FA20	PS28a ☑
98	OS581-200LW	1	2.0m	35m	5.0	1.0	35m	200m	3.0	40m	20	07☑		DA		FA20	PS28a ☑
99	OS581-200W	1	2.0m	35m	5.0	1.0	35m	200m	3.0	40m	20	07☑		DA		FA20	PS28 ☑
100	OS582-060L	1	2.0m	35m	5.0	1.0	35m	60m	3.0	40m	20	07☑	150u#	DA	Dual Channel	FA12	PS28a ☑
101	OS582-060LW	1	2.0m	35m	5.0	1.0	35m	60m	3.0	40m	20	07☑	150u#	DA	Dual Channel	FA12	PS28a ☑
102	OS582-200L	1	2.0m	35m	5.0	1.0	35m	200m	3.0	40m	20	07☑		DA	Dual Channel	FA12	PS28a ☑
103	OS582-200LW	1	2.0m	35m	5.0	1.0	35m	200m	3.0	40m	20	07☑		DA	Dual Channel	FA12	PS28a ☑
104	CLI841	1	2.5m	5.0m	1.5 #	1.0	10m	125m	4.0	60m	55	5F%	5.0u#	TR	Switch	FA23a	PS132d
105	CNY29	1	2.5mØ	20m	5.0 #	1.2	20m	125m☑	3.0	60m	25	58	150u	DA	Interrupt	FA20b	PS4a ☑
106	SSOS700	1	3.0m		5.0	400m†		110m	6.0	100m		6A	8.0u#	DI		FA4	PS14 ☑
107	SSOS800	1	3.0m		5.0	400m†		120m	6.0	100m		6A	8.0u#	DI		FA4	PS15 ☑
108	CLI325	1	3.0mØ	10m	5.0 #	1.0	10m	250m	3.0	60m	30	5A§	50u#	DA	IRED/NPN	FA3b	PS1a ☑
109	TLP507A	1	3.0mØ	10m	2.0 #			118m	5.0	50m	30	28		DA		FA3a	PS132b
110	MOC70K2	1	3.0mØ	30m	5.0 #			.120	6.0	50m	30	48§	12u	TR		FA23a	PS437

SYMBOLS AND CODES EXPLAINED IN INTERPRETER

19. GAP & REFLECTIVE SENSORS - Gap Detector (Cont'd)

IN ORDER OF FORM AND: (1) CHANNELS (2) OUTPUT CURRENT & (4) TYPE NUMBER

LINE No.	4 TYPE NUMBER	1 CHAN	2 DETECTOR OUTPUT CURRENT IC (A)	4 IF (A)	VCC (V)	MAX.DETECT. SAT. VOLT VCE(SAT) (V)	IF (A)	NOM. SEP. (in)	MAX. DIODE REV V VR (V)	MAX. DIODE FWD I IF (A)	MAX. C/E VOLT VCE (V)	TEMP RNG. CODE - +	RESP TIME (s)	TYPE OF O/P CKT	DESCRIPTION	SCHE-MATIC	DRAWING
1	MOC70T2	1	3.0mØ	30m	5.0 #			.115	6.0	50m	30	48§	12u	TR		FA23a	PS192
2	MOC70U2	1	3.0mØ	30m	5.0 #			.115	6.0	50m	30	48§	12u	TR		FA23a	PS193
3	STCT0AD	1	3.0mØ	40m	5.0	400m	50m	60m			25	48	10u#	TR	Switch	None	PS28 ☑
4	STCT1AD	1	3.0mØ	40m	5.0	400m	50m	190m			25	48	10u#	TR	Switch	None	PS28a ☑
5	STCT2AD	1	3.0mØ	40m	5.0	400m	50m	190m			25	48	10u#	TR	Switch	None	PS28a ☑
6	STCD0B	1	3.3mØ	40m	5.0	1.0	50m	60m			25	48	150u#	DA		None	PS28 ☑
7	STCD1B	1	3.3mØ	40m	5.0	1.0	50m	60m			25	48	150u#	DA		None	PS28 ☑
8	STCD2B	1	3.3mØ	40m	5.0	1.0	50m	60m			25	48	150u#	DA		None	PS28 ☑
9	TLP850	1	4.0m	10m	2.	1.1	24m	.20	5.	50m	30	28	250u	DA		None ♦	PS371
10	CLI836	1	4.0m	20m	5.0 #	400m	20m	125m	4.0	60m	55	5F%	5.0u#	TR	Switch	FA23a	PS132d
11	H21A3	1	4.0mØ	20m	5.0 #	400m	20m	125m	6.0	60m	30	5A	8.0u#	TR		FA23a	PS192 ☑
12	H21A6	1	4.0mØ	20m	5.0 #	400m	20m	125m	6.0	60m	55	5A	8.0u#	TR		FA23a	PS192 ☑
13	H22A3	1	4.0mØ	20m	5.0 #	400m	20m	125m	6.0	60m	30	5A	8.0u#	TR		FA23a	PS193 ☑
14	H22A6	1	4.0mØ	20m	5.0 #	400m	20m	125m	6.0	60m	55	5A	8.0u#	TR		FA23a	PS193 ☑
15	HOA1872-003	1	4.0mØ	20m	5 #	1.1	20m	2.54 *	3	50m	15	5A	500u#	DA	Hermetic	None	PS455
16	HOA1872-13	1	4.0m	20m	5 #	1.1	20m	2.54 *	3	60m	15	48	500u#	DA	Plastic;No Tab	None	PS455a ☑
17	HOA1873-003	1	4.0mØ	20m	5 #	1.1	20m	2.54 *	3	50m	15	5C	500u#	DA	Hermetic	None	PS456
18	HOA1873-013	1	4.0m	20m	5 #	1.1	20m	2.54 *	3	60m	15	48	500u#	DA	Plastic	None	PS456
19	HOA1874-003	1	4.0mØ	20m	5 #	1.1	20m	3.05 *	3	50m	15	5C	500u#	DA	Hermetic	FA3g	PS457
20	HOA1874-013	1	4.0m	20m	5 #	1.1	20m	3.05 *	3	60m	15	48	500u#	DA	Plastic	None	PS457
21	HOA1878-013	1	4.0m	20m	5 #	1.1	20m	3.18 *	3	60m	15	48	500u#	DA	Plastic	None	PS458
22	HOA1881-013	1	4.0m	20m	5 #	1.1	20m	3.18 *	3	60m	15	48	500u#	DA	Plastic;Two Tabs	None	PS478
23	HOA1882-003	1	4.0m	20m	5.0 #	1.1	20m	5.08 *	3.0	60m	30	48	500u	DA	Plastic;No Tab	None	PS475a ☑
24	HOA1883-003	1	4.0m	20m	5.0 #			3.56 *				48		DA	Plastic;No Tab	None	PS475b ☑
25	HOA2862-003	1	4.0mØ	20m	5 #	1.1	20m	2.54 *	3	50m	15	5C	500u#	DA	Hermetic	None	PS462
26	OPB847	1	4.0mØ	20m	5.0 #	400m	20m	100m	2.0	20m				TR		None	None
27	TCST1103	1	4.0m	20m	5.0 #	400m	20m		6.0	60m	70	5A%	5.0u	TR	Min hFE 10%	None	PS435
28	TCST1203	1	4.0m	20m	5.0 #	400m	20m		6.0	60m	70	5A%	5.0u	TR	Min hFE10%	None	PS435a
29	TCST2103	1	4.0m	20m	5.0 #	400m	20m		6.0	60m	70	5A%	5.0u	TR	Min hFE 10%	None	PS432
30	TCST2203	1	4.0m	20m	5.0 #	400m	20m		6.0	60m	70	5A%	5.0u	TR	Min hFE10%	None	PS432a
31	TCST3103	1	4.0m	20m	5.0 #	400m	20m		6.0	60m	70	5A%	5.0u	TR	Min hFE 10%	None	PS433
32	TCST3203	1	4.0m	20m	5.0 #	400m	20m		6.0	60m	70	5A%	5.0u	TR	Min hFE10%	None	PS433a
33	VTL10D4	1	4.0m	20m	5.0 #	0.4	20m	3.2 *	2.0	40m	30	48		TR	TTL Comp	FA2c	PS389a
34	VTL10D4A	1	4.0m	20m	5.0	400m	20m	.125	2.0	40m	30	48	5.0u	TR	Slot Sw ModA	None	None
35	VTL10D4B	1	4.0m	20m	5.0	400m	20m	.125	2.0	40m	30	48	5.0u	TR	Slot Sw ModB	None	None
36	VTL11D4	1	4.0m	20m	5.0 #	0.4	20m	3.2 *	2.0	40m	30	48		TR	TTL Comp	FA2c	PS389a
37	VTL11D4A	1	4.0m	20m	5.0	400m	20m	.125	2.0	40m	30	48	5.0u	TR	Slot Sw ModA	None	None
38	VTL11D4B	1	4.0m	20m	5.0	400m	20m	.125	2.0	40m	30	48	5.0u	TR	Slot Sw ModB	None	None
39	VTL12D4	1	4.0m	20m	5.0 #	0.4	20m	3.2 *	2.0	40m	30	48		TR	TTL Comp	FA2c	PS389a
40	VTL12D4A	1	4.0m	20m	5.0	400m	20m	.125	2.0	40m	30	48	5.0u	TR	Slot Sw ModA	None	None
41	VTL12D4B	1	4.0m	20m	5.0	400m	20m	.125	2.0	40m	30	48	5.0u	TR	Slot Sw ModB	None	None
42	VTL13D4	1	4.0m	20m	5.0 #	0.4	20m	3.2 *	2.0	40m	30	48		TR	TTL Comp	FA2c	PS389a
43	VTL13D4A	1	4.0m	20m	5.0	400m	20m	.125	2.0	40m	30	48	5.0u	TR	Slot Sw ModA	None	None
44	VTL13D4B	1	4.0m	20m	5.0	400m	20m	.125	2.0	40m	30	48	5.0u	TR	Slot Sw ModB	None	None
45	VTL18D4	1	4.0m	20m	5.0 #	0.4	20m	3.2 *	2.0	40m	30	48		TR	TTL Comp	FA2c	PS389a
46	OS561A060	1	4.7m	35m	5.0	400m	35m	60m	3.0	40m	25	07☑	15u#	TR		FA13	PS28 ☑
47	OS561A060L	1	4.7m	35m	5.0	400m	35m	60m	3.0	40m	25	07☑	15u#	TR		FA13	PS28a ☑
48	OS561A060LW	1	4.7m	35m	5.0	400m	35m	60m	3.0	40m	25	07☑	15u#	TR		FA13a	PS28a ☑
49	OS561A060W	1	4.7m	35m	5.0	400m	35m	60m	3.0	40m	25	07☑	15u#	TR		FA13a	PS28 ☑
50	OS561A200	1	4.7m	35m	5.0	400m	35m	200m	3.0	40m	25	07☑		TR		FA13	PS28 ☑
51	OS561A200L	1	4.7m	35m	5.0	400m	35m	200m	3.0	40m	25	07☑		TR		FA13	PS28a ☑
52	OS561A200LW	1	4.7m	35m	5.0	400m	35m	200m	3.0	40m	25	07☑		TR		FA13a	PS28a ☑
53	OS561A200W	1	4.7m	35m	5.0	400m	35m	200m	3.0	40m	25	07☑		TR		FA13a	PS28 ☑
54	OS562A060L	1	4.7m	35m	5.0	400m	35m	60m	3.0	40m	25	07☑	15u#	TR	Dual Channel	FA11	PS28a ☑
55	OS562A060LW	1	4.7m	35m	5.0	400m	35m	60m	3.0	40m	25	07☑	15u#	TR	Dual Channel	FA11	PS28a ☑
56	OS562A200L	1	4.7m	35m	5.0	400m	35m	200m	3.0	40m	25	07☑		TR	Dual Channel	FA11	PS28a ☑
57	OS562A200LW	1	4.7m	35m	5.0	400m	35m	200m	3.0	40m	25	07☑		TR	Dual Channel	FA11	PS28a ☑
58	MCA8	1	4.8m	16m	5.0 #	1.0	50m	.100	3.0	60m	30	5A	150u	TR	CTR 120m	FA3	PS4 ☑
59	OS591S060L	1	4.9m	35m	5.0	400m	35m	60m	3.0	40m	5.0	07☑	15u#	TR		FA14	PS28a ☑
60	OS591S060LW	1	4.9m	35m	5.0	400m	35m	60m	3.0	40m	5.0	07☑	15u#	TR		FA14	PS28a ☑
61	OS591S200L	1	4.9m	35m	5.0	400m	35m	200m	3.0	40m	5.0	07☑		TR		FA14	PS28a ☑
62	OS591S200LW	1	4.9m	35m	5.0	400m	35m	200m	3.0	40m	5.0	07☑		TR		FA14	PS28a ☑
63	OS592S060L	1	4.9m	35m	5.0	400m	35m	60m	3.0	40m	5.0	07☑	50n#	TR	Dual Channel	FA10	PS28a ☑
64	OS592S060LW	1	4.9m	35m	5.0	400m	35m	60m	3.0	40m	5.0	07☑	50n#	TR	Dual Channel	FA10	PS28a ☑
65	OS592S200L	1	4.9m	35m	5.0	400m	35m	200m	3.0	40m	5.0	07☑		TR	Dual Channel	FA10	PS28a ☑
66	OS592S200LW	1	4.9m	35m	5.0	400m	35m	200m	3.0	40m	5.0	07☑	50n#	TR	Dual Channel	FA10	PS28a ☑
67	CLI851	1	5.0m	5.0m	1.5 #	1.0	10m	125m	4.0	60m	55	5F%	5.0u#	TR	Switch	FA23a	PS132d
68	MOC70K3	1	5.5mØ	30m	5.0 #			.120	6.0	50m	30	48§	12u	TR		FA23a	PS437
69	MOC70T3	1	5.5mØ	30m	5.0 #			.115	6.0	50m	30	48§	12u	TR		FA23a	PS192
70	MOC70U3	1	5.5mØ	30m	5.0 #			.115	6.0	50m	30	48§	12u	TR		FA23a	PS193
71	TCST1104	1	6.0m	20m	5.0 #	400m	20m	3.1 *	6.0	60m	70	5A%	5.0u	TR	Min hFE 20%	None	PS435
72	TCST2104	1	6.0m	20m	5.0 #	400m	20m		6.0	60m	70	5A%	5.0u	TR	Min hFE 20%	None	PS432
73	TCST3104	1	6.0m	20m	5.0 #	400m	20m		6.0	60m	70	5A%	5.0u	TR	Min hFE 20%	None	PS433
74	STCT0AE	1	6.5mØ	40m	5.0	400m	50m	60m			25	48	10u#	TR	Switch	None	PS28 ☑
75	STCT1AE	1	6.5mØ	40m	5.0	400m	50m	190m			25	48	10u#	TR	Switch	None	PS28a ☑
76	STCT2AE	1	6.5mØ	40m	5.0	400m	50m	190m			25	48	10u#	TR	Switch	None	PS28a ☑
77	STCD0C	1	7.0mØ	40m	5.0	1.0	50m	60m			25	48	150u#	DA		None	PS28 ☑
78	STCD1C	1	7.0mØ	40m	5.0	1.0	50m	60m			25	48	150u#	DA		None	PS28 ☑
79	STCD2C	1	7.0mØ	40m	5.0	1.0	50m	60m			25	48	150u#	DA		None	PS28 ☑
80	H21B1	1	7.5mØ	10m	1.5 #	1.0	10m	125m	6.0	60m	30	5A	125u	DA		FA20b	PS192 ☑
81	H22B1	1	7.5mØ	10m	1.5 #	1.0	10m	125m	6.0	60m	30	5A	125u	DA		FA20b	PS193 ☑
82	MOC71T1	1	7.5mØ	10m	5.0 #	1.0m	10m	.115	6.0	50m	30	48§		DA		FA20b	PS192
83	MOC71U1	1	7.5mØ	10m	5.0 #	1.0m	10m	.115	6.0	50m	30	48§		DA		FA20b	PS193
84	MOC71W1	1	7.5mØ	10m	5.0 #	1.0	10m	.100	6.0	60m	30	48§		DA		FA67	PS438
85	GP411	1	8.0m	20m	2.0 #			118m	6.0	65m	35	28	130u#	DA		FA20b	PS132 ☑
86	GP411F	1	8.0m	20m	2.0 #	1.0	50m	118m	6.0	65m	35	28	130u#	DA		FA20b	PS132
87	CLI861	1	10m	5.0m	1.5 #	1.0	10m	125m	4.0	60m	55	5F%	5.0u#	TR	Switch	FA23a	PS132d
88	CLI840M	1	10m	10m	1.5 #	1.0	10m	125m	4.0	60m	1.5	5F%	150u#	DA	SWITCH	FA23a	PS132d
89	CLI840W	1	10m	10m	1.5 #	1.0	10m	125m	4.0	60m	1.5	5F%	150u#	DA	SWITCH	FA23a	PS297
90	CLI841M	1	10m	10m	1.5 #	1.0	10m	125m	4.0	60m	1.5	5F%	150u#	DA	Switch	FA23a	PS132d
91	CLI841W	1	10m	10m	1.5 #	1.0	10m	125m	4.0	60m	1.5	5F%	150u#	DA	Switch	FA23a	PS297
92	H21B5	1	10mØ	10m	1.5 #	1.0	10m	125m	6.0	60m	55	5A	45u#	DA		FA20b	PS192 ☑
93	H22B5	1	10mØ	10m	1.5 #	1.0	10m	125m	6.0	60m	55	5A	45u#	DA		FA20b	PS193 ☑
94	CLI220	1	10mØ	20m	5.0 #	1.0	20m	100m	3.0	60m	40	5F%		DA	Switch	FA20b	PS218c
95	KU107-02	1	10m	20m	5.0 #	0.4	20m	3.0 *	4.0	50m	30	38	5.0u#	TR	Interrupter	None	PS317b
96	ON1110	1	10m	20m	10 #	0.3	50m		3.0	50m	30	3A%	6.0u	TR		FA23a	PS132f
97	CLI355	1	12mØ	10m	5.0 #	1.0	10m	250m	3.0	60m	30	5A§	300u#	DA	IRED/NPN	FA33	PS1a ☑
98	H21B2	1	14mØ	10m	1.5 #	1.0	10m	125m	6.0	60m	30	5A	125u	DA		FA20b	PS192 ☑
99	H22B2	1	14mØ	10m	1.5 #	1.0	10m	125m	6.0	60m	30	5A	125u	DA		FA20b	PS193 ☑
100	STCT0AG	1	14mØ	40m	5.0	400m	50m	60m			25	48	10u#	TR	Switch	None	PS28 ☑
101	STCT1AG	1	14mØ	40m	5.0	400m	50m	190m			25	48	10u#	TR	Switch	None	PS28a ☑
102	STCT2AG	1	14mØ	40m	5.0	400m	50m	190m			25	48	10u#	TR	Switch	None	PS28a ☑
103	CEN730	1	15m	30m	2.0			118m	6.0	65m	35	28	100u	TR		None	PS132i
104	CLI850M	1	17m	10m	1.5 #	1.0	10m	125m	4.0	60m	1.5	5F%	150u#	DA	Switch	FA23a	PS132d
105	CLI850W	1	17m	10m	1.5 #	1.0	10m	125m	4.0	60m	1.5	5F%	150u#	DA	Switch	FA23a	PS297
106	CLI851M	1	17m	10m	1.5 #	1.0	10m	125m	4.0	60m	1.5	5F%	150u#	DA	Switch	FA23a	PS132d
107	CLI851W	1	17m	10m	1.5 #	1.0	10m	125m	4.0	60m	1.5	5F%	150u#	DA	Switch	FA23a	PS297
108	HOA2001-001	1	18m☑	60m	20			3.05 *	3	60m		4A	60n#	ST	Plastic	FA73	PS459
109	HOA2003-001	1	18m☑	60m	20			3.18 *	3	60m		4A	60n#	ST	Plastic	FA73	PS460
110	MOC71T3	1	20mØ	10m	5.0 #	1.0m	10m	.115	6.0	50m	30	48§		DA		FA20b	PS192

SYMBOLS AND CODES EXPLAINED IN INTERPRETER

19. GAP & REFLECTIVE SENSORS - Gap Detector (Cont'd)

IN ORDER OF FORM AND: (1) CHANNELS (2) OUTPUT CURRENT & (4) TYPE NUMBER

LINE No.	4 TYPE NUMBER	1 CHAN	2 DETECTOR OUTPUT CURRENT IC (A)	4 IF (A)	VCC (V)	MAX.DETECT. SAT. VOLT VCE(SAT) (V)	IF (A)	NOM. SEP. (in)	MAX. DIODE REV V VR (V)	MAX. DIODE FWD I IF (A)	MAX. C/E VOLT VCE (V)	TEMP RNG. CODE - +	RESP TIME (s)	TYPE OF O/P CKT	DESCRIPTION	SCHE-MATIC	DRAWING
1	MOC71U3	1	20mØ	10m	5.0 #	1.0m	10m	.115	6.0	50m	30	48§		DA		FA20b	PS193
2	H21B3	1	25mØ	10m	1.5 #	1.0	10m	125m	6.0	60m	30	5A	125u	DA		FA20b	PS192 ☑
3	H21B6	1	25mØ	10m	1.5 #	1.0	10m	125m	6.0	60m	55	5A	45u#	DA		FA20b	PS192 ☑
4	H22B3	1	25mØ	10m	1.5 #	1.0	10m	125m	6.0	60m	30	5A	125u	DA		FA20b	PS193 ☑
5	H22B6	1	25mØ	10m	1.5 #	1.0	10m	125m	6.0	60m	55	5A	45u#	DA		FA20b	PS193 ☑
6	CLI385	1	25m	15m	15				3	1.5		4A		TR		CE35	None
7	CLI861M	1	28m	10m	1.5 #	1.0	10m	125m	4.0	60m	1.5	5F%	150u#	DA	Switch	FA23a	PS132d
8	CLI861W	1	28m	10m	1.5 #	1.0	10m	125m	4.0	60m	1.5	5F%	150u#	DA	Switch	FA23a	PS297
9	CLI860M	1	30m	10m	1.5 #	1.0	10m	125m	4.0	60m	1.5	5F%	150u#	DA	Switch	FA23a	PS132d
10	CLI860W	1	30m	10m	1.5 #	1.0	10m	125m	4.0	60m	1.5	5F%	150u#	DA	Switch	FA23a	PS297
11	TLP851	1	30m	10m	2.	1.2	10m	.20	5.	50m	30	28	200u	DA		None ♦	PS371
12	CLI710	1	40m☑	20m	5.0 #				4.0 †	60m	30	5F%	5.0u#	TR	IRED/NPN	CB45	PS472 ☑
13	CLI890	1	50m☑					125m	4.0	60m		5C%			Switch	FA76	PS472
14	CLI890M	1	50m☑					125m	4.0	60m		5C%			Switch	FA76	PS472
15	CLI890W	1	50m☑					125m	4.0	60m		5C%			Switch	FA76	PS472
16	CLI892	1	50m☑					125m	4.0	60m		5C%			Switch	FA76	PS472
17	CLI892M	1	50m☑					125m	4.0	60m		5C%			Switch	FA76	PS472
18	CLI892W	1	50m☑					125m	4.0	60m		5C%			Switch	FA76	PS472
19	CLI894	1	50m☑					125m	4.0	60m		5C%			Switch	FA76	PS472
20	CLI894M	1	50m☑					125m	4.0	60m		5C%			Switch	FA76	PS472
21	CLI894W	1	50m☑					125m	4.0	60m		5C%			Switch	FA76	PS472
22	CLI8905	1	50m☑					125m	4.0	60m		5C%			Switch	FA76	PS472
23	CLI8905M	1	50m☑					125m	4.0	60m		5C%			Switch	FA76	PS472
24	CLI8905W	1	50m☑					125m	4.0	60m		5C%			Switch	FA76	PS472
25	CLI8910	1	50m☑					125m	4.0	60m		5C%			Switch	FA76	PS472
26	CLI8910M	1	50m☑					125m	4.0	60m		5C%			Switch	FA76	PS472
27	CLI8910W	1	50m☑					125m	4.0	60m		5C%			Switch	FA76	PS472
28	CLI8912	1	50m☑					125m	4.0	60m		5C%			Switch	FA76	PS472
29	CLI8912M	1	50m☑					125m	4.0	60m		5C%			Switch	FA76	PS472
30	CLI8912W	1	50m☑					125m	4.0	60m		5C%			Switch	FA76	PS472
31	CLI8914	1	50m☑					125m	4.0	60m		5C%			Switch	FA76	PS472
32	CLI8914M	1	50m☑					125m	4.0	60m		5C%			Switch	FA76	PS472
33	CLI8914W	1	50m☑					125m	4.0	60m		5C%			Switch	FA76	PS472
34	CLI8925	1	50m☑					125m	4.0	60m		5C%			Switch	FA76	PS472
35	CLI8925M	1	50m☑					125m	4.0	60m		5C%			Switch	FA76	PS472
36	CLI8925W	1	50m☑					125m	4.0	60m		5C%			Switch	FA76	PS472
37	CLI8945	1	50m☑					125m	4.0	60m		5C%			Switch	FA76	PS472
38	CLI8945M	1	50m☑					125m	4.0	60m		5C%			Switch	FA76	PS472
39	CLI8945W	1	50m☑					125m	4.0	60m		5C%			Switch	FA76	PS472
40	OTS257(A)	1	50m			.8	25m	.125	6	60m		07	200u	AP		None	PS192
41	OTS258(A)	1	50m			.8	25m	.08	6	60m		07	200u	AP		None	PS184
42	OTS259	1	50m			0.8	25m	.375	6.0	60m		07	500n#	AP		FA69	PS441
43	OTS263	1	50m			0.8	25m	.100	6.0	60m		07	500n#	AP	Dual	FA70	PS
44	OTS264	1	50m			0.8	25m	.100	6.0	60m		07	500n#	AP	Dual	FA70	PS
45	OTS267	1	50m			0.8	25m	.125	6.0	60m		07	500n#	AP		FA69b	PS443
46	OTS268	1	50m			0.8	25m	.400	6.0	60m		07	500n#	AP		FA69a	PS442
47	OTS269	1	50m			0.8	25m	.375	6.0	60m		07	500n#	AP		FA69	PS441
48	PS4008	1	50m	10m	2.0	300m	10m		5.0	50m	30	28	5u#	TC	LED NPN	FA72	PS132e
49	OTS260	1	100m			0.5	20m	.100	6.0	60m	30	5A	5.0u	TR	Dual	FA65	PS247a
50	OTS254(A)	1	100m	60m	30 #			.08	6	60m	30	5A	20u*	TR		FA2f	PS184
51	CLI700	1	250m☑	20m	5.0 #	400m	20m	125m	4.0 †	60m	30	5F%	5.0u#	TR	IRED/NPN	CB45	PS472 ☑
52	CLI600	1	400mØ	20m	5.0	250m†	30m	276m	4.0	60m	30	5F%	5.0u#	TR	IRED/NPN	None	PS471 ☑
53	VTL13E7B	1	.75	2.0m	5.0	1.0	10m	.125	2.0	40m	30	48	150u	DA	Slot Sw ModB	None	None
54	MOC7811	1	1.9 Ø	30m	5.0 #	400m	30m	129m	6	50m	30	4A	12u#	TR		None ♦	PS192
55	MOC7821	1	1.9 Ø	30m	5.0 #	400m	30m	129m	6	50m	30	4A	12u#	TR		None ♦	PS193
56	MOC7812	1	3.0 Ø	30m	5.0 #	400m	20m	129m	6	50m	30	4A	12u#	TR		None ♦	PS192
57	MOC7822	1	3.0 Ø	30m	5.0 #	400m	20m	129m	6	50m	30	4A	12u#	TR		None ♦	PS193
58	MOC7813	1	5.5 Ø	30m	5.0 #	400m	20m	129m	6	50m	30	4A	12u#	TR		None ♦	PS192
59	MOC7823	1	5.5 Ø	30m	5.0 #	400m	20m	129m	6	50m	30	4A	12u#	TR		None ♦	PS193
60	112-3	2	20m		5.0	400m		62m$	3.0	50m	20		2.0u	TR	Opt Switch	FA23	PS105 ☑
61	125-1	12	16m		5.0	400m		18m				07			Multi-Channel	FA24	PS106 ☑

PYROELECTRIC DETECTOR

65	RPY93R(A)	1			30	9.0						45		AP	IR Alarms	None	TO-5
66	P1692	1	100u		3.0							47		DI	110 deg VIEW	None	PD1091
67	4192	2		40u		15	40u	1.0 *				15		AP	Dual Sensor	FA51	TO-5
68	5192	2		40u		15	40u	1.0 *				15		AP	Dual Sensor	FA51	TO-5

REFLECTIVE SCANNER MODULE

72	C32301	1							5.0 $	140m		05		AP	Light activ	FB156	PS326
73	C32302	1							5.0 $	140m		05		AP	Dark activ	FB156	PS326
74	C32303	1							5.0 $	140m		05		AP	Light activ	FB156	PS326
75	C32304	1							5.0 $	140m		05		AP	Dark activ	FB156	PS326
76	L11201/P11201	1						1.0		35m	30	06	50u	TR	FIL	None	PS144
77	L33014	1							2.0	200m		07	3.0u#	DI	LED	None	PS117 Ø
78	L33107	1						36 ☑	2.0	100m		07	3.0u#	DI	LED	FA2d	PS117
79	L56001	1								115m$		07	3.0u#	DI		FA31	PS116
80	P33001	1									20	07	3.0u#	TR	Photo TR	None	PS117 Ø
81	P33014	1									20	07	3.0u#	TR	Photo TR	None	PS117 Ø
82	P33101	1						36 ☑				07	3.0u#	TR	Photo TR	FA2d	PS117
83	S11920	1							5.0 $		20	05		AP		FB183	PS381
84	S13324	1							5.0 $		20	05		AP		None	PS112
85	S14101	1							5.0 $		20	05		AP		FB183	PS380a
86	S14103	1							5.0 $		20	05		AP		FB183	PS380a
87	S15101	1							5.0 $		20	05		AP		FB183	PS380b
88	S15105	1							5.0 $		20	05		AP		FB183	PS380b
89	S16101	1							5.0 $		20	05		AP		FB183	PS380
90	S16103	1							5.0 $		20	05		AP		FB183	PS380
91	S16111	1							5.0 $		20	05		AP		FB183	PS380
92	S16113	1							5.0 $		20	05		AP		FB183	PS380
93	S17105	1							5.0 $		20	05		AP		FB183	PS154
94	S19101	1							5.0 $	115m$	30	07	1.0u#	TR	Sight Glass	None	PS114 ☑
95	S19111	1							5.0 $	115m$	30	07	1.0u#	TR	Sight Glass	None	PS114a ☑
96	S19121	1							5.0 $	115m$	30	07	1.0u#	TR	Sight Glass	None	PS114b ☑
97	S19141	1							5.0 $	115m$	30	07	1.0u#	TR	Sight Glass	None	PS114c ☑
98	S22004	1							2.0	100m	20	07	8.0u#	TR	Skanner	None	PS219
99	S22104	1							2.0	100m	20	07	8.0u#	TR	Skanner	None	PS220
100	S27301	1							5.0 $		20	05		AP		FB182	TO-18
101	S27311	1							5.0 $		20	05		AP		FB182	PS325
102	S28001	1							2.0	40m	30	05		TR	Skanner	None	PS293
103	S28002	1							2.0	40m	30	05		TR	Skanner	None	PS293A
104	S28003	1							2.0	40m	30	05		TR	Skanner	None	PS293B
105	S51101	1						0.10			20	05		TR	incd Source	FA53	PS377a
106	S51104	1						0.10		100m	20	05		TR	LED Source	FA52	PS377b
107	S51105	1						0.10			20	05		TR	incd Source	FA53	PS377a
108	S51106	1						0.10		100m	20	05		TR	LED Source	FA52	PS377b
109	S52101	1						0.10				05		TR	incd Source	FA53	PS377c
110	S52105	1						0.10				05		TR	incd Source	FA53	PS377c

SYMBOLS AND CODES EXPLAINED IN INTERPRETER

19. GAP & REFLECTIVE SENSORS - Reflective Scanner Module (Cont'd)

IN ORDER OF FORM AND: (1) CHANNELS (2) OUTPUT CURRENT & (4) TYPE NUMBER

LINE No.	4 TYPE NUMBER	1 CHAN	2 DETECTOR OUTPUT CURRENT IC (A)	4 IF (A)	VCC (V)	MAX.DETECT. SAT. VOLT VCE(SAT) (V)	IF (A)	NOM. SEP. (in)	MAX. DIODE REV V VR (V)	MAX. DIODE FWD I IF (A)	MAX. C/E VOLT VCE (V)	TEMP RNG. CODE - +	RESP TIME (s)	TYPE OF O/P CKT	DESCRIPTION	SCHE-MATIC	DRAWING
1	S58401	1						6.0m			20	05		TR	Reflex Det	FA52	PS376
2	S58601	1						6.0m			20	05		TR	Reflex Det	FA52	PS376
3	S58101	1	10u	115m#	5.0 #	5.0	115m	6.0m	5.0 $	100m$	20	07	20u#	TR	Skanner	FA18	PS113 ☑
4	OPS690	1	50uØ	20m	10 #	500m	20m	125m	2.0	3.0	30	48		TR	LED to NPN	FA2a	PS164 ☑
5	OPB822SD	1	100uØ	20m	5.0 #	400m	20m	100m	3.0	20m				TR		FA37	PS247
6	OPB826SD	1	100uØ	20m	5.0 #	400m	20m	150m	3.0	20m				TR		FA38	PS248
7	K8020	1	100u	40m		300m	400u	.250	2.0	40	30	68	700n	TR	K6500/K5500	FA6	None
8	K8030	1	100u	40m		400m	400u	.125	2.0	40	30	68	700n	TR	K6550/K5550	FA6	None
9	K8010	1	100u	100m		300m	400u	.250	2.0	100	50	68	700n	TR	K6250/K5250	FA6	None
10	OPB822S	1	250uØ	20m	5.0 #	400m	20m	100m	3.0	20m				TR		FA37	PS247
11	OPB826S	1	250uØ	20m	5.0 #	400m	20m	150m	3.0	20m				TR		FA38	PS248
12	OPS660	1	500u	20m	5.0 #	400m	20m	250m	2.0	50m	30	4A		TR	LED to NPN	None ♦	PS445
13	OPS691	1	500uØ	20m	10 #	500m	20m	125m	2.0	3.0	30	48		TR	LED to NPN	FA2a	PS164 ☑
14	TCZT8000(A)	1	500u	20m	5.0 #	400m	20m		6.0	60m	70	XA§	4.0u	TR	Matched Pr	FA66	PS436
15	TCZT8020	1	500u	20m	5.0 #	400m	20m		6.0	60m	70	XA§	4.0u	TR	Matched Pr	FA66	None
16	OPS661	1	1.0m	20m	5.0 #				2.0	50m	30	4A		TR	LED to NPN	None ♦	PS445
17	OPS692	1	1.0mØ	20m	10 #	500m	20m	125m	2.0	3.0	30	48		TR	LED to NPN	FA2a	PS164 ☑
18	TCZT8001(A)	1	1.0m	20m	5.0 #	400m	20m		6.0	60m	70	XA§	4.0u	TR	Matched Pr	FA66	PS436
19	TCZT8021	1	1.0m	20m	5.0 #	400m	20m		6.0	60m	70	XA§	4.0u	TR	Matched Pr	FA66	None
20	S13224	1	1.2m					1.0	2.0	60m	30	05	50u	TR	SKANNER/IR	None	None
21	H23A1	1	1.5mØ	30m	5.0 #	400m	30m	125m	6.0	60m	30	5A	8.0u	TR		FA46	PS295
22	H23B1	1	2.0mØ	10m	1.5 #		10m	125m	6.0	60m	30	5A	45u	DA		None	None
23	OPS693	1	2.0mØ	20m	10 #	500m	20m	125m	2.0	3.0	30	48		TR	LED to NPN	FA2a	PS164 ☑
24	TCZT8012	1	2.0m	20m	5.0 #	400m	20m		6.0	60m	70	XA§	4.0u	TR	Matched Pr	FA66	None
25	TCZT8013	1	4.0m	20m	5.0 #	400m	20m		6.0	60m	70	XA§	4.0u	TR	Matched Pr	FA66	None
26	OPS662	1	5.0m	20m	5.0 #				2.0	50m	30	4A		TR	LED to NPN	None ♦	PS445
27	S12001	1	20m		5.0 #	5.0	200m	1.5	2.0	100m	20	07	3.0u#	TR	LED	FA2	PS57 ☑
28	S56401	1	20m☑						5.0 $	100m$	20	07	5.0u#	TR	Lamp	None	PS113 ☑
29	S56404	1	20m☑						1.7	100m	20	07	5.0u#	TR	LED	None	PS113 ☑
30	TCZS8000	1	20m	20m	5.0 #	400m	20m		6.0	60m	70	28§	30n#	ST	Matched Pr	None	PT128
31	TCZS8010	1	20m	20m	5.0 #	400m	20m		6.0	60m	70	28§	30n#	ST	Matched Pr	FA66	None
32	P34024	1	50m									05		TR	Photo TR	None	PS117c
33	H23L1	1	50m	60m	5		60m	.15	6	3		58	.1u	ST		None ♦	PS303
34	L34024	1	60m						2.0	120m		05		DI	LED	None	PS117c
35	H23A2	1	100m			400m	30m		6.0	60m	30	5C	8.0u	TR		FA46	PS295
36	S35201	1	2.0 Ø	80u		5.0	115m	100m				X7	20m	TR	Color dect.	FA18	PS99 ☑
37	S35202	1	2.0 Ø	80u		5.0	115m	100m				X7	2m	TR	Color dect	FA18	PS99 ☑
38	S35203	1	2.0 Ø	80u		5.0	115m	100m				X7	2m	TR	Color dect	FA18	PS99 ☑

REFLEX DETECTOR

42	OTR125SCN	1				300m		10				07	50n#	ST	Photoxistor	None	PS250
43	OTR125SCP	1				300m		10				07	50n#	ST	Photoxistor	None	PS250
44	OTR125SLN	1				300m		10				07	15n#	ST	Photoxistor	None	PS250
45	OTR125SLP	1				300m		10				07	15n#	ST	Photoxistor	None	PS250
46	P17103	1								100m	30	05		TR	Reflex Det	FA18	PS154
47	S17103	1									20	05		TR	Reflex Det	FA18	PS154
48	S17104	1								100m	20	05		TR	Reflex Det	FA52	PS154
49	S17403	1									20	05		TR	Reflex Det	FA18	PS154a
50	S17404	1								100m	20	05		TR	Reflex Det	FA52	PS154b
51	S17405	1									15	05		TR	Reflex Det	FA18	PS154B
52	S27321	1														None	None
53	S27341	1														None	None
54	PG2BC	1	400nØ	4.0m	5.0 #				5.0	50m	20	29	100u	DA	Pc 75mW	FA59a	PS398 Ø
55	GP500	1	800nØ	50m	10 #			.040	6.0	100m	45	16	150u	TR		None ♦	PS44 ☑
56	P2009	1	1.0u	20m	1.6			1.0 *	5.0	50m		28	500n#	DI	Ref Dist 1mm	FA63	PS428 Ø
57	OPB709	1	1.0u	40m	5.0 #	1.1	40m	150m	2.0	40m	30	48		DA	White Refl	None ♦	PS3a ☑
58	OTR631	1	5.0u☑	10m	5.0 #				4.0	50m	40	48§		TR	Pd 75mW	FA59b	PS400
59	TLP902	1	10u	20m	5.0	0.4	20m	1.65 $	5.	50m	30	28	6.u	TR		None ♦	PS374
60	HOA708-001	1	10uØ	40m	5.0 #			3.18 *		40m	30	48	15u#	TR	Plastic;ld 100nA	None ♦	PS3
61	HOA708-011	1	10uØ	40m	5.0 #			3.18 *		40m	30	48	15u#	TR	Plastic;ld 100nA	None ♦	PS3
62	OPB708	1	10u	40m	5.0 #	400m	40m	150m	2.0	40m	30	48		TR	White Refl	None ♦	PS3a ☑
63	OPB703A	1	20u	40m	5.0 #			.200						TR	Transducer	FA8	PS65
64	STRT850F	1	20uØ	50m	5.0 #	700m	50m	400m	2.0	75m	20	4A	60u#	TR	W/IR Filter	None	PS12 ☑
65	HOA149-001	1	25uØ	40m	5.0 #			3.8 *		40m	30	48	15u#	TR	Plastic;ld 100nA	None ♦	PS104
66	OPB253A	1	25uØ	40m	5.0 #	1.6	50m	200m	3.0	50m	25	4A		TR		FA15	PS47 ☑
67	TIL149	1	25uØ	40m	5.0 #	400m	40m	.150	2.0	40m	30	48%		TR		None	PS104 ☑
68	HOA1180-001	1	40uØ	30m	5 #			12.7 *	3	50m	30	5A	6u#	TR	Hermetic	None ♦	PS35
69	HOA2498-001	1	40uØ	30m	5 #			12.7 *	3	50m	30	5A	6u#	TR	Hermetic	None ♦	PS35e
70	STRT900-1	1	40uØ	30m	5.0 #			500m	2.0		10	4A	4.0u#	TR		None ♦	PS35d ☑
71	ON2270	1	50uØ		5.0	1.5	5.0m	.040	3.0	50m	20	28	150u#	TR	FLAT MOUNT	FA2	PS357
72	CEN720	1	50u	4.0m	2.0			39.4m	6.0	50m	35	28	10u	TR	w/IR Filter	None	PS430
73	ON2160	1	50u	10m	5.0	0.4	20m		3.0	50m	30	3A%	15u	TR		FA23b	PS282
74	SPI304	1	50uØ	10m		600m	50m				20	28		TR	Reflector	FA59	PH347
75	SG1CL3-1	1	50uØ	20m	5.0 #			4.2 *	4.0	60m	20	27		TR	Pc 75mW	FA6	PS401 ☑
76	K8700	1	50u	40m	5.0 #			150m	2.0	40m	30	48		TR	White Refl	None ♦	PS3
77	K8701	1	50u	40m	5.0 #			150m	2.0	40m	30	48		TR	White Refl	None ♦	PS3
78	K8702	1	50u	40m	5.0 #			150m	2.0	40m	30	48		TR	White Refl	None ♦	PS3
79	K8703	1	50u	40m	5.0 #			150m	2.0	40m	30	48		TR	White Refl	None ♦	PS3
80	K8740	1	50u	40m	5.0 #			150m	2.0	40m	30	48		TR	White Refl	None ♦	PS104
81	OTR630	1	50uØ	40m	5.0 #				4.0	50m	40	48§		TR	Pd 75mW	FA59b	PS400
82	OPB711	1	50uØ	50m	5.0 #			400m	3.0	20m				TR		FA23	PS26a ☑
83	STRD70	1	50uØ	50m	5.0 #			400m	3.0		30	4A	600u#	DA		None	PS26a ☑
84	STRD70F	1	50uØ	50m	5.0 #			400m	3.0		30	4A	600u#	DA		None	PS26a ☑
85	STRT850A	1	60uØ	50m	5.0 #	700m	50m	400m	2.0	75m	20	4A	60u#	TR		FA15	PS12 ☑
86	STRT850AF	1	60uØ	50m	5.0 #	700m	50m	400m	2.0	75m	20	4A	60u#	TR	W/IR Filter	None	PS12 ☑
87	STRT850B	1	80uØ	50m	5.0 #	700m	50m	400m	2.0	75m	20	4A	60u#	TR		FA15	PS12 ☑
88	STRT850BF	1	80uØ	50m	5.0 #	700m	50m	400m	2.0	75m	20	4A	60u#	TR	W/IR Filter	None	PS12 ☑
89	PS6001A	1	100u		5.0	0.3			3.0	50m	30	38%		TR		FA64	PS448
90	SG2BC	1	100u	4.0m	2.0 #				5.0	50m	30	29	30u	TR	Pc 75mW	FA59	PS398 Ø
91	SPI302	1	100uØ	10m		600m	50m				20	27		TR	Reflector	FA58	PH346
92	ON2153	1	100u	20m	5.0	0.5	50m		3.0	50m	30	3A%	6.0u	TR		FA35	PS281
93	OTR640	1	100uØ	20m	5.0 #				6.0	100m	35	28§		TR	Pd 150mW	FA78	PS474
94	OTR641	1	100uØ	20m	5.0 #				6.0	100m	35	28§		TR	Pd 150mW	FA64	PS474
95	OTR650	1	100uØ	20m	5.0 #				6.0	100m	35	49§		TR	Pd 150mW	FA77	TO18
96	K8720	1	100u	40m	5.0 #			150m	2.0	40m	30	48		TR	White Refl	None ♦	PS104
97	K8730	1	100u	40m	5.0								5.0u	TR	White Refl	FA42	PS104
98	PG7L2	1	100uØ	40m	5.0 #			9.1 *	4.0	40m	20	27	100u	DA	Pc 50mW	FA59c	PS399 ☑
99	PG7L3	1	100u	40m	5.0 #			9.6 *	4.0	40m	20	27	100u	DA	Pc 50mW	FA59c	PS400 ☑
100	STRT910-2	1	125uØ	30m	5.0 #			500m	2.0		50	4A	5.0u#	TR		None ♦	PS35d ☑
101	STRT850	1	125u	50m	5.0 #	700m	50m	400m	2.0	75m	20	4A	60u#	TR		FA15	PS12 ☑
102	VTR16D1	1	.15m	20m	5.0	400m	20m	0.20	2.0	40m	30	48	5.0u	TR	PC mount	FA2c	PS296
103	VTR17D1	1	.15m	20m	5.0	400m	20m	0.20	2.0	40m	30	48	5.0u	TR	12 in lead	FA2c	PS296a
104	VTR17D1C	1	.15m	20m	5.0	400m	20m	0.20	2.0	40m	30	48	5.0u	TR	leadw/conn	FA2c	PS296b
105	S11101	1	150u☑	35m	30			180m		35m	30	06		TR	IR LED	None ♦	PS178 ☑
106	OPB710	1	150uØ	50m	5.0 #			.250	3.0	50m	30	07	10u#	TR		FA20a	PS48 ☑
107	HOA1180-002	1	160uØ	30m	5 #			12.7 *	3	50m	30	5A	6u#	TR	Hermetic	None ♦	PS35
108	HOA2498-002	1	160uØ	30m	5 #			12.7 *	3	50m	30	5A	8u#	TR	Hermetic	None ♦	PS35e
109	HOA1397-001	1	200uØ	20m	5 #			1.27 *	3	60m	30	4A	6u#	TR	Plastic	None	PS12
110	OPB706C	1	200uØ	20m	5.0 #			50m	3.0	3.0	30	58	10u#	TR		FA2a	PS161 ☑

SYMBOLS AND CODES EXPLAINED IN INTERPRETER

19. GAP & REFLECTIVE SENSORS - Reflex Detector (Cont'd)

IN ORDER OF FORM AND: (1) CHANNELS (2) OUTPUT CURRENT & (4) TYPE NUMBER

LINE No.	[4] TYPE NUMBER	[1] CHAN	[2] DETECTOR OUTPUT CURRENT IC (A)	[4] IF (A)	VCC (V)	MAX.DETECT. SAT. VOLT VCE(SAT) (V)	IF (A)	NOM. SEP. (in)	MAX. DIODE REV V VR (V)	MAX. DIODE FWD I IF (A)	MAX. C/E VOLT VCE (V)	TEMP RNG. CODE - +	RESP TIME (s)	TYPE OF O/P CKT	DESCRIPTION	SCHE-MATIC	DRAWING
1	HOA1404-001	1	200uØ	30m	5 #			5.08 *	3	60m	30	5A	6u#	TR	Hermetic	None ♦	PS37
2	HOA1405-001	1	200uØ	30m	5 #			5.08 *	3	40m	30	4A	10u#	TR	Plastic;Id 100nA	None ♦	PS463
3	K8710	1	200u	40m	5.0 #			150m	2.0	40m	30	48		TR	White Refl	None ♦	PS3
4	K8711	1	200u	40m	5.0 #			150m	2.0	40m	30	48		TR	White Refl	None ♦	PS3
5	K8712	1	200u	40m	5.0 #			150m	2.0	40m	30	48		TR	White Refl	None ♦	PS3
6	K8713	1	200u	40m	5.0 #			150m	2.0	40m	30	48		TR	White Refl	None ♦	PS3
7	K8713-16	1	200u	40m	5.0								5u	TR		None	PS3
8	TLP903	1	0.3m	2m	5			.20	5.	50m	30	28	200u	DA		None ♦	PS372
9	HLC1395-001	1	300uØ	10m	5.0 #			1.01 *			30	48	6u	TR	Plastic;ID 100nA	None ♦	PS481
10	ON2170	1	300u	10m	5.0	0.4	20m	40m	3.0	50m	30	28	15u	TR		None ♦	PS357
11	TLP904	1	0.3m	10m	5			.20	5.	50m	30	28	6.u	TR		None ♦	PS372
12	SG7L2	1	300u	40m	5.0 #			9.1 *	4.0	40m	20	27	5.0u	TR	Pc 50mW	FA59b	PS399 ☑
13	SG7L3	1	300u	40m	5.0 #			9.6 *	4.0	40m	20	27	5.0u	TR	Pc 50mW	FA59b	PS400 ☑
14	OPB706B	1	350uØ	20m	5.0 #			50m	3.0	3.0	30	58	10u#	TR		FA2a	PS161 ☑
15	MCA7	1	400u	50m	5.0 #			.100	3.0	75m	30	5A	600u#	TR	ICEO 5.0nA	FA8	PS26 ☑
16	CEN710	1	450u	30m				335m	6.0	50m	35	28	30u	TR	w/IR Filter	None	PS429
17	OPB706A	1	500uØ	20m	5.0 #			50m	3.0	3.0	30	58	10u#	TR		FA2a	PS161 ☑
18	SG1C	1	500u	20m	5.0 #			3.5 *	4.0	20m	20	56	5.0u	TR	Pc 50mW	FA58	PS402
19	HOA1160-001	1	500uØ	30m	5 #			1.90 *	3	50m	30	5A	8u#	TR	Hermetic	None ♦	PS34
20	HLC1395-002	1	600uØ	10m	5.0 #			1.01 *			30	48	6u	TR	Plastic;ID 100nA	None ♦	PS481
21	HOA1397-002	1	700uØ	20m	5 #			1.27 *	3	60m	30	4A	6u#	TR	Plastic;Id 100nA	None	PS12
22	HOA1404-002	1	800uØ	30m	5 #			5.08 *	3	60m	30	5A	8u#	TR	Hermetic	None ♦	PS37
23	HOA1405-002	1	800uØ	30m	5 #			5.08 *	3	40m	30	4A	15u#	TR	Plastic;Id 100nA	None ♦	PS463
24	P2058	1	900u	30m	30 #	400m		1.0 *	5.0	50m	30	28	20u#	TR	Ref Dist 1mm	FA64	PS428 Ø
25	ON2152	1	1.0m			600m	100m		3.0	100m	20	3A%	8.0u	TR		FA35	PS217
26	ON2253	1	1.0m	10m	5.0	1.5	50m		3.0	50m	20	3A%	150u	DA		FA3a	PS281
27	HOA709-001	1	1.0mØ	40m	5.0 #			3.18 *		40m	15	48	15u#	DA	Plastic;Id 250nA	None ♦	PS3
28	HOA709-011	1	1.0mØ	40m	5.0 #			3.18 *		40m	15	48	15u#	DA	Plastic;Id 250nA	None ♦	PS3
29	OPB730	1	1.0mØ	50m	5.0 #			250m	3.0	50m	30	07	80u#	DA		FA3	PS48 ☑
30	HOA1397-031	1	2.0mØ	20m	5 #			1.27 *	3	60m	15	4A	50u#	DA	Plastic;Id 250nA	None	PS12
31	HOA1160-002	1	2.0mØ	30m	5 #			1.90 *	3	50m	30	5A	10u#	TR	Hermetic	None ♦	PS34
32	HOA1180-003	1	2.0mØ	30m	5 #			12.7 *	3	50m	15	5A	50u#	DA	Hermetic	None ♦	PS35
33	HOA1404-003	1	2.0mØ	30m	5 #			5.08 *	3	60m	15	5A	50u#	DA	Hermetic	None ♦	PS37
34	HOA2498-003	1	2.0mØ	30m	5 #			12.7 *	3	50m	15	5A	50u#	DA	Hermetic	None ♦	PS35e
35	STRT920-3	1	2.0mØ	30m	5.0 #			500m	2.0		15	4A	25u#	TR		None ♦	PS35d ☑
36	OPB125A	1	2.0mØ	40m	5.0 #	1.6	50m	200m	3.0	50m	25	4A		DA		FA8a	PS47 ☑
37	GP450	1	5.0m	20m	2.0 #	1.0	50m	118m	6.0	65m	35	28	130u#	DA		FA3a	PS240
38	GP450F	1	5.0m	20m	2.0 #	1.0	50m	118m	6.0	65m	35	28	130u#	DA		FA3a	PS240
39	HOA1160-003	1	5.0mØ	30m	5 #			1.90 *	3	50m	15	5A	50u#	DA	Hermetic	None ♦	PS34
40	HOA1397-032	1	7.0mØ	20m	5 #			1.27 *	3	60m	15	4A	50u#	DA	Plastic;Id 250nA	None	PS12
41	OTR121SLN	1	8.0mØ			300m		36	3.0 †	-.4m		07	15n#	ST	Photoxistor	None	PS238
42	OTR121SLP	1	8.0mØ			300m		36	3.0 †	-.4m		07	15n#	ST	Photoxistor	None	PS238
43	HBCS1100	1	8.0m☑	50m	20	400m†	10u	4.52	5.0	50m		27		TR	TR/DI output	FA36	PS232
44	OPB707C	1	10mØ	20m	5.0 #			50m	3.0	3.0	15	58	100u#	DA	Darlington	FA20	PS161 ☑
45	HMP2038	1	10m☑	30m	5.0 #			1.9 *	3.0	50m	30	5C%	10u#	TR	High Reliabilty	None ♦	PS34 ☑
46	SFH900	1	10m☑	50m	30 #			2.0 *	6.0	50m	30	48%	50u#	TR	Ice 500uA	FA61	PS414 ☑
47	SFH900-1	1	10m	50m	30 #			2.0 *	6.0	50m	30	48%	50u#	TR	Ice 300uA	FA61	PS414a ☑
48	SFH900-2	1	10m	50m	30 #			2.0 *	6.0	50m	30	48%	50u#	TR	Ice 500uA	FA61	PS414a
49	ZNP100	1	16m		5.0									DI	Photoswitch	FA37	PS226
50	ZNP102	1	16m		5.0									DI	Photoswitch	FA37	PS226
51	ZNP103	1	16m		5.0									DI	Photoswitch	FA37	PS226
52	STCT1S	1	16m	25m	5.0	400m	25m	190m			30	48	200n#	ST	SW/Schmitt	None	PS28a ☑
53	STCT2S	1	16m	25m	5.0	400m	25m	190m			30	48	200n#	ST	SW/Schmitt	None	PS28a ☑
54	OPB707B	1	17mØ	20m	5.0 #			50m	3.0	3.0	15	58	100u#	DA	Darlington	FA20	PS161 ☑
55	OPB712	1	20mØ	20m	5.0 #			80m	3.0	20m				DA		FA23	PS26a ☑
56	OPB707A	1	25mØ	20m	5.0 #			50m	3.0	3.0	15	58	100u#	DA	Darlington	FA20	PS161 ☑
57	ON1501	1	50m☑		24			.197			30	08	100u	TC	IRED/TC	None ♦	PS465
58	ON1503	1	100m☑		5.0			.142			20	06	1.0u#	TC	IRED/TC	None ♦	PS466
59	OTR121SCN	1	200mØ			300m		36	3.0 †			07	50n#	ST	Photoxistor	None	PS238
60	OTR121SCP	1	200mØ			300m		36	3.0 †			07	50n#	ST	Photoxistor	None	PS238
61	TLP901	1	0.4	2.0m	5.0	1.0	20m	$	5.	50m	30	28	200u	DA		None ♦	PS374

DID YOU KNOW? D.A.T.A. maintains a database of over 700,000 components from more than 700 vendors.

25. OPTOCOUPLERS: PHOTOCELL OUTPUT - LDR-Output (Cont'd)

IN ORDER OF: (1) TYPE (2) CHANNELS (3) V(IO) (4) R(on) & (5) TYPE NUMBER

LINE No.	5 TYPE NUMBER	1 TYPE CODE	PD RATED MAX (W)	TEMP RNGE CODE - +	3 VIO ISOL VOLT (V)	COUPLED CHAR. RISE TIME (s)	DECAY TIME (s)	INPUT SOURCE TYPE	RATED VOLT Δ-VR (V)	RATED CURR. Δ-IR (A)	OUTPUT DC CELL VOLT *AC ΔPk (V)	CHANNELS 2 INPUT	OUTPT	4 ON RESIS. Ron (Ω)	OFF RESIS. Roff (Ω)	MATER. & FEATURE MAT	SCHE-MATIC	DRAWING
	OPTOCOUPLER, LDR-OUTPUT																	
4	MTL726A	LDR	150m			6.0m	60m	I	5.0	30m		1	1	60	5.0M	10 §	None	PH39
5	MTL716A	LDR	150m			6.0m	60m	I	5.0	30m		1	1	150	10M	10 §	None	PH39
6	MTL703C	LDR	70m			8.0m	60m	I	10	16m		1	1	200	5.0M	10 §	None	PH39
7	MCL723C	LDR	200m			8.0m	60m	INC	10	16m		1	1	250	5.0M	10 §	None	PH39
8	MCL702A	LDR	80m			16m	100m	INC	3.0	16m		1	1	400	1.0M	10 §	None	PH39
9	MCL703C	LDR	80m			10m	120m	INC	10	16m		1	1	400	5.0M	10 §	None	PH39
10	MCN721A	LDR	200m			1.0m	40m	GAS	100	1.9m		1	1	400	5.0M	10 §	None	PH39
11	MCL716A	LDR	200m			8.0m	40m	INC	5.0	30m		1	1	500	10M	10 §	None	PH39
12	MCN701A	LDR	60m			2.0m	80m	GAS	100	1.9m		1	1	500	3.0M	10 §	None	PH39
13	CLM7H16A	LDR	75m	27		90m	100m	INC	16 Δ	17m	170	1	1	550	10M	BA 5.0	None	PH23 Ø
14	CLM5H10A	LDR	90m	27		120m	70m	INC	10 Δ	17m	100	1	1	3.0k	10M	BA 5.0	None	PH23 Ø
15	MCD735	LDR	125m	27	50	3.0m	8.0m	LED	1.9	15m	3.0	1	1	150	1.0M	XX	None	PH65 Ø
16	CK2000B	LDR	100m	26	500	40m	400m	INC	25	37m	100	1	1	40	10M	BB	None	PH103 Ø
17	CK2002	LDR	100m	46	500	25m	350m	INC	4.0	55m	100	1	1	50	5.0M	BB	None	PH107
18	CK2101	LDR	100m♦	26	500	20m	500m	INC	5.0	22m	100	1	1	50	1.0M	BB	None	PH17g Ø
19	VTL9A2	LDR	400m%	47	500	50m	350m	INC	6.0	40m	100	1	1	60	10M	XX	CA1	PH6 Ø
20	CK2013	LDR	100m♦	37	500	35m	700m	INC	25	37m	100	1	1	100	1.0M	CF	None	PH103 Ø
21	CK2118	LDR	100m♦		500	35m	300m	INC	4.0	55m	100	1	1	100	1.0M	CF	None	PH17g Ø
22	VTL2C4	LDR	100m%	57	500	6.0m	1.5	LED	2.0	40m	70	1	1	100	400k	XX	None	PH17m
23	CK1121W	LDR	100m		500	35m	300m	INC	5.0	55m	100	1	1	150	10M	BB	None	PH103 Ø
24	CK1115	LDR	100m	56	500	35m	300m	INC	4.0	55m	200	1	1	200	10M	BB	CA2	PH17g
25	CK2028B	LDR	100m♦	37	500	40m	850m	INC	25	37m	100	1	1	200	1.0M	BA	None	PH103 Ø
26	VTL9A9	LDR	400m%	47	500	55m	250m	INC	6.0	40m	300	1	1	200	10M	XX	CA1	PH6 Ø
27	CK2003	LDR	100m	26	500	30m	250m	INC	10	18m	100	1	1	225	10M	BB	None	PH103 Ø
28	VTL1A2	LDR	100m%	57	500	50m	400m	INC	6.0	40m	150	1	1	250	10M	XX	CA2	PH17k
29	VTL1A4	LDR	100m%	57	500	75m	500m	INC	12	25m	150	1	1	250	10M	XX	CA2	PH17k
30	VTL9A3	LDR	400m%	47	500	55m	160m	INC	10	14m	100	1	1	250	10M	XX	CA1	PH6 Ø
31	CK2112	LDR	125m♦	37	500	35m	350m	INC	10	18m	150	1	1	300	10M	CF	None	PH103 Ø
32	CK2150	LDR	125m♦	36	500	40m	800m	INC	5.0	55m	75	1	1	300	1.0M	Dua	None	PH13c
33	CK2172	LDR	150m♦	26	500	45m	950m	INC	25	37m	75	1	1	300	1.0M	CFDual	None	PH106 Ø
34	VTL9A4	LDR	400m%	47	500	80m	400m	INC	10	22m	100	1	1	300	10M	XX	CA1	PH6 Ø
35	VTL9B6	LDR	400m%	47	500	3.0m	400m	GAS	125 Δ	1.5m	200	1	1	300	1.0M	XX	CA1	PH6 Ø
36	CK1116	LDR	100m	56	500	30m	350m	INC	4.0	20m	100	1	1	350	10M	BB	CA2	PH17g
37	CK2046	LDR	100m♦	26	500	25m	300m	INC	1.0	18m	100	1	1	350	1.0M	BB	None	PH17g Ø
38	CK1117	LDR	100m	26	500	30m	300m	INC	3.0	15m	100	1	1	400	10M	BB	None	PH17g Ø
39	VTL9A1	LDR	400m%	47	500	70m	350m	INC	1.5	50m	100	1	1	400	10M	XX	CA1	PH6 Ø
40	CK2124	LDR	100m♦	37	500	25m	800m	INC	3.0	15m	100	1	1	450	1.0M	CF	None	PH17g Ø
41	CK2142	LDR	170m	37	500	5.0m	650m	LED	3.0 Δ	25m	150	1	1	500	10M	CF	CA3	PH17g Ø
42	VTL1A1	LDR	100m%	57	500	65m	350m	INC	1.5	50m	150	1	1	500	10M	XX	CA2	PH17k
43	VTL2C2	LDR	100m%	57	500	3.5m	500m	LED	2.0	40m	100	1	1	500	1.0M	XX	CA3	PH17m
44	CK2157	LDR	150m♦	37	500	10m	650m	LED	3.0	40m	75	1	2	600	1.0M	BADual	CA14	PH13c
45	CK2173	LDR	150m♦	37	500	10m	650m	LED	3.0	25m	75	1	1	600	1.0M	CFDual	None	PH106 Ø
46	MCD521L	LDR	125m	38	500	2.0m	60m	LED	3.0 Δ	30m	150	1	1	600	1.0M	BB	None	PH39
47	MCD522L	LDR	125m	38	500	2.0m	60m	LED	3.0 Δ	50m	150	1	1	600	1.0M	BB	None	PH39
48	VTL9A11	LDR	400m%	47	500	90m	250m	INC	12	25m	300	1	1	600	10M	XX	CA1	PH6 Ø
49	CK1114	LDR	100m	56	500	25m	275m	INC	1.0	18m	100	1	1	650	10M	BB	CA2	PH17g
50	CK2127	LDR	100m♦	37	500	25m	700m	INC	3.0	15m	100	1	1	700	1.0M	CF	None	PH17g Ø
51	CK2080	LDR	150m♦	26	500	35m	550m	INC	4.0	55m	240	1	1	750	100M	BB	None	PH17g Ø
52	CK2039	LDR	100m♦	26	500	30m	300m	INC	1.0	18m	100	1	1	800	1.0M	BB	None	PH17g Ø
53	VTL1A3	LDR	100m%	57	500	50m	150m	INC	10	14m	150	1	1	800	10M	XX	CA2	PH17k
54	VTL9A10	LDR	400m%	47	500	60m	150m	INC	10	14m	300	1	1	800	10M	XX	CA1	PH6 Ø
55	VTL9B7	LDR	400m%	47	500	3.0m	90m	GAS	125 Δ	1.5m	300	1	1	800	10M	XX	CA1	PH6 Ø
56	CK2151	LDR	125m♦	37	500	60m	850m	INC	5.0	55m	75	1	2	850	1.0M	Dua	CA14	PH13c
57	CK2155	LDR	150m♦	26	500	10m	500m	LED	3.0	40m	75	1	2	900	1.0M	CFDual	CA14	PH13c
58	CK2071	LDR	100m♦	56	500	35m	850m	INC	4.0	55m	100	1	1	1.0k	1.0M	BA	CA2	PH17g Ø
59	CK2153	LDR	125m♦	36	500	50m	800m	INC	3.0	15m	75	1	2	1.0k	1.0M	Dua	CA14	PH13c
60	MCD329	LDR	60m	25	500	1.0	50m	LED	1.6	10m	100	1	1	1.0k	1.0M	BA	CA3a	PH64b
61	MCD521H	LDR	125m	38	500	1.0m	40m	LED	3.0 Δ	30m	150	1	1	1.0k	3.0M	BB	None	PH39
62	MCD522H	LDR	125m	38	500	1.0m	40m	LED	3.0 Δ	50m	150	1	1	1.0k	3.0M	BB	None	PH39
63	P653G35-584	LDR	100m	35	500	7.0m	7.0m	LED	2.0	20m	100	1	4	1.0k	5.0M	BA	CA24	PH303
64	VTL1B5	LDR	100m%	57	500	3.0m	60m	GAS	150	1.5m	150	1	1	1.0k	10M	XX	CA2	PH17k
65	CK2095	LDR	75m♦	37	500	35m	850m	INC	4.0	20m	75	1	1	1.2k	1.0M	BA	None	PH17g Ø
66	VTL9A5	LDR	400m%	47	500	80m	225m	INC	10	22m	200	1	1	1.5k	10M	XX	CA1	PH6 Ø
67	CK2072	LDR	100m♦	56	500	30m	600m	INC	4.0	20m	100	1	1	1.8k	1.0M	BA	CA2	PH17g Ø
68	VTL2C3	LDR	100m%	57	500	2.5m	35m	LED	2.0	40m	300	1	1	2.0k	10M	XX	None	PH17m
69	VTL9B8	LDR	400m%	47	500	5.0m	70m	GAS	80 Δ	300u	300	1	1	2.0k	10M	XX	CA1	PH6 Ø
70	CK2070	LDR	100m♦	37	500	25m	550m	INC	1.0	18m	100	1	1	2.5k	1.0M	BA	None	PH17g Ø
71	CK2143	LDR	170m	37	500	5.0m	850m	LED	3.0 Δ	25m	150	1	1	3.0k	5.0M	CF	CA3	PH17g Ø
72	CK2141	LDR	170m	36	500	4.0m	120m	LED	3.0 Δ	25m	150	1	1	5.0k	50M	BB	CA3	PH17g Ø
73	MTD733-5	LDR	60m	37	500	3.0m	6.0m	LED	3.0 Δ	20m	150	1	1	5.0k	1.5M	BB	CA6a	PH39
74	VTL1B6	LDR	100m%	57	500	5.0m	60m	GAS	90	300u	150	1	1	5.0k	10M	XX	CA2	PH17k
75	P653G50-6	LDR	100m	35	500	6.0m	9.0m	LED	1.7	10m	100	1	2	7.0k	1.0M	BA	CA23	PH303a
76	CK2140	LDR	145m	36	500	2.0m	15m	LED	3.0 Δ	25m	100	1	1	7.5k	50M	BB	CA3	PH17g Ø
77	CK2154	LDR	125m♦	37	500	50m	850m	INC	3.0	15m	75	1	2	8.0k	1.0M	Dua	CA14	PH13c
78	MTD533	LDR	75m	37	500	500u	3.0m	LED	3.0 Δ	20m	200	1	1	10k	100M	BB	CA6	PH39
79	MTD533-6	LDR	75m	37	500	500u	3.0m	LED	3.0 Δ	20m	200	1	1	10k	100M	BB	None	PH39
80	VTL2C1	LDR	100m%	57	500	500u	3.5m	LED	2.0	40m	70	1	1	10k	100M	XX	CA3	PH17m
81	P653G50-584	LDR	100m	35	500	4.0m	6.0m	LED	1.7	10m	100	1	4	20k	10M	BA	CA24	PH303a
82	CLM7000	LDR	100m	47%	750	3.5m	120m	LED			100	1	1	3.5k	5M	XX	CA4a	PH17r Ø
83	CLM7100	LDR	100m	47%	750	3.5m	40m	LED			100	1	1	11k	10M	XX	CA4a	PH17r Ø
84	CLM7200	LDR	100m	47%	750	3.0m	10m	LED			100	1	1	36k	10M	XX	CA4a	PH17r Ø
85	CK2000	LDR	100m	26	1.0k	35m	400m	INC	25	37m	150	1	1	40	10M	BB	None	PH103 Ø
86	CK2139	LDR	125m♦		1.0k	40m	300m	INC	5.0	55m	125	1	1	100	10M	CF	None	PH103 Ø
87	CK1121	LDR	100m	56	1.0k	35m	300m	INC	5.0	55m	100	1	1	150	10M	BB	None	PH103
88	CK1123	LDR	100m	56	1.0k	40m	400m	INC	25	37m	150	1	1	150	10M	BB	None	PH103
89	CK2149	LDR	125m♦	37	1.0k	15m	700m	LED	3.0	25m	125	1	1	150	1.0M	CF	None	PH103 ⊠
90	CK2018	LDR	125m♦	26	1.0k	35m	175m	INC	5.0	55m	200	1	1	200	1.0G	BB	None	PH103 Ø
91	CK2028	LDR	100m♦	37	1.0k	40m	750m	INC	25	37m	100	1	1	200	5.0M	BA	None	PH103 Ø
92	CK2028A	LDR	100m♦	37	1.0k	40m	850m	INC	25	37m	100	1	1	200	1.0M	BA	None	PH103 Ø
93	CK2052	LDR	125m♦	27	1.0k	40m	950m	INC	25	37m	125	1	1	300	1.0M	BA	None	PH103 Ø
94	CK2148	LDR	125m♦	37	1.0k	15m	350m	LED	3.0	25m	125	1	1	300	1.0M	CF	None	PH103 ⊠
95	CK2137	LDR	125m♦	27	1.0k	50m	750m	INC	12	25m	150	1	1	500	10M	CF	None	PH17h Ø
96	CK1122B	LDR	125m		1.0k	30m	225m	INC	10	18m	200	1	1	600	100M	BB	None	PH103 Ø
97	CK1122	LDR		56	1.0k	30m	300m	INC	10	18m	100	1	1	750	10M	BB	None	PH103
98	CK2132	LDR	125m♦		1.0k	30m	125m	INC	10	18m	150	1	1	750	100M	BB	None	PH103 Ø
99	CK1122W	LDR	125m		1.0k	30m	225m	INC	10	18m	200	1	1	850	100M	BB	None	PH103 Ø
100	CK2078	LDR	125m♦	26	1.0k	35m	350m	INC	10	18m	150	1	1	850	10M	BB	None	PH17h Ø
101	CK2019	LDR	1.0 ♦		1.0k	40m	750m	INC	25	37m	150	1	1	1.0k	1.0M	BB	None	PH103 Ø
102	CK2086	LDR	125m♦		1.0k	30m	300m	INC	10	18m	150	1	1	1.0k	10M	BB	None	PH103 Ø
103	CK2147	LDR	125m♦	26	1.0k	3.0m	75m	LED	3.0	25m	150	1	1	1.0k	100M	BB	None	PH103 ⊠
104	CK2053	LDR	125m♦	27	1.0k	40m	950m	INC	5.0	55m	125	1	1	1.2k	1.0M	BA	None	PH103 Ø
105	CK2015	LDR	125m♦	26	1.0k	35m	175m	INC	25	37m	200	1	1	1.5k	100M	BB	None	PH103 Ø
106	CK2051	LDR	125m♦	27	1.0k	30m	950m	INC	10	18m	125	1	1	2.0k	1.0M	BA	None	PH103 Ø
107	CK1124	LDR	100m	56	1.0k	5.0m	125m	GAS	150	1.2m	150	1	1	3.0k	10M	BB	None	PH103
108	VTL3A13	LDR	550m	47	1.5k§	50m	250m	INC	4.0	60m	100	1	1	160m	5.0M	XX	CA2	PH9 Ø
109	VTL3A14	LDR	550m	47	1.5k§	50m	200m	INC	6.0	40m	100	1	1	160m	5.0M	XX	CA2	PH9 Ø
110	VTL3A17	LDR	550m	47	1.5k§	25m	150m	INC	12	40m	100	1	1	160m	5.0M	XX	CA2	PH9 Ø

SYMBOLS AND CODES EXPLAINED IN INTERPRETER

25. OPTOCOUPLERS: PHOTOCELL OUTPUT - LDR-Output (Cont'd)

IN ORDER OF: (1) TYPE (2) CHANNELS (3) V(IO) (4) R(on) & (5) TYPE NUMBER

LINE No.	5 TYPE NUMBER	1 TYPE CODE	PD RATED MAX (W)	TEMP RNGE CODE - +	COUPLED CHAR. 3 VIO ISOL VOLT (V)	RISE TIME (s)	DECAY TIME (s)	INPUT TYPE	SOURCE RATED VOLT Δ-VR (V)	CURR. Δ-IR (A)	OUTPUT DC CELL VOLT *AC ΔPk (V)	CHANNELS 2 INPUT	OUTPT	4 ON RESIS. Ron (Ω)	OFF RESIS. Roff (Ω)	MATER. & FEATURE MAT]	SCHE-MATIC	DRAWING
1	VTL3A23	LDR	550m	47	1.5k§	80m	500m	INC	4.0	60m	200	1	1	300m	1.0M	XX	CA2	PH9 Ø
2	VTL3A11	LDR	550m	47	1.5k§	80m	300m	INC	1.5	55m	100	1	1	350m	5.0M	XX	CA2	PH9 Ø
3	VTL3A12	LDR	550m	47	1.5k§	40m	150m	INC	3.0	15m	100	1	1	350m	5.0M	XX	None	PH9 Ø
4	VTL3A15	LDR	550m	47	1.5k§	55m	200m	INC	10	14m	100	1	1	350m	5.0M	XX	CA2	PH9 Ø
5	VTL3A16	LDR	550m	47	1.5k§	70m	300m	INC	12	25m	100	1	1	400m	5.0M	XX	CA2	PH9 Ø
6	VTL3A22	LDR	550m	47	1.5k§	60m	300m	INC	3.0	15m	200	1	1	600m	1.0M	XX	CA2	PH9 Ø
7	VTL3A21	LDR	550m	47	1.5k§	80m	300m	INC	1.5	55m	200	1	1	800m	1.0M	XX	CA2	PH9 Ø
8	VTL3B38/2	LDR	550m	47	1.5k§	20m	35m	GAS	120 §		125	1	1	22.5 §	10M	XX	CA5a	PH9c Ø
9	VTL3A47	LDR	550m	47	1.5k§	25m	900m	INC	12	40m	100	1	1	40		XX	CA2	PH9 Ø
10	CK2104	LDR	100m	46	1.5k	40m	950m	INC	5.0	60m	150	1	1	50	10M	CF	CA17	TO-8
11	VTL3A43	LDR	550m	47	1.5k§	40m	900m	INC	4.0	60m	100	1	1	55		XX	CA2	PH9 Ø
12	VTL3A44	LDR	550m	47	1.5k§	50m	800m	INC	6.0	40m	100	1	1	55		XX	CA2	PH9 Ø
13	VTL3A47/2	LDR	550m	47	1.5k§	25m	900m	INC	12	40m	50	1	1	60 §		XX	CA2a	PH9b Ø
14	VTL3A43/2	LDR	550m	47	1.5k§	40m	900m	INC	4.0	60m	50	1	1	82.5 §		XX	CA2a	PH9b Ø
15	VTL3A44/2	LDR	550m	47	1.5k§	50m	800m	INC	6.0	40m	50	1	1	82.5 §		XX	CA2a	PH9b Ø
16	CK2103	LDR	100m	46	1.5k	40m	950m	INC	5.0	60m	150	1	1	100	10M	CF	CA17	TO-8
17	VTL3A46	LDR	550m	47	1.5k§	75m	900m	INC	12	25m	100	1	1	100		XX	CA2	PH9 Ø
18	CK1103	LDR	100m	56	1.5k	40m	750m	INC	5.0	200m	100	1	1	150	10M	XX	CA10	PH100
19	CK1103P	LDR	100m	56	1.5k	40m	750m	INC	5.0	200m	100	1	1	150	10M	XX	CA10	PH101 ☑
20	CK1104	LDR	100m	56	1.5k	35m	450m	INC	25	37m	100	1	1	150	10M	XX	CA10	PH100
21	CK1104P	LDR	100m	56	1.5k	35m	450m	INC	25	37m	100	1	1	150	10M	XX	CA10	PH101 ☑
22	VTL3A27	LDR	550m	47	1.5k§	80m	400	INC	12	40m	200	1	1	150	1.0M	XX	CA2	PH9 Ø
23	VTL3A45	LDR	550m	47	1.5k§	55m	750m	INC	10	14m	100	1	1	150		XX	CA2	PH9 Ø
24	VTL3A46/2	LDR	550m	47	1.5k§	75m	900m	INC	12	25m	50	1	1	150 §		XX	CA2a	PH9b Ø
25	VTL3A41	LDR	550m	47	1.5k§	80m	900m	INC	1.5	55m	100	1	1	200		XX	CA2	PH9 Ø
26	VTL3A42	LDR	550m	47	1.5k§	40m	750m	INC	3.0	15m	100	1	1	200		XX	CA2	PH9 Ø
27	VTL5C4	LDR	175m%	57	1.5k	6.0m	1.5	LED	2.0	40m	50	1	1	200	400k	XX	CA4a	PH8a Ø
28	VTL3A45/2	LDR	550m	47	1.5k§	55m	750m	INC	10	14m	50	1	1	225 §		XX	CA2a	PH9b Ø
29	VTL3B49/2	LDR	550m	47	1.5k§	5.0m	600m	GAS	120 §		50	1	1	240 §	1.0M	XXDual	CA5a	PH9c Ø
30	CK2145	LDR	120m	37	1.5k	3.0m	900m	LED	3.0 Δ	25m	60	1	1	250	500k	XX	CA3a	PH23e Ø
31	PLF5S380	LDR	250m	66	1.5k			LED	2.0	25m	80	1	1	250	10M	BB	None	PH95 Ø
32	CK2008P	LDR	100m	27	1.5k	5.0m	120m	GAS	120	3.5m	100	1	1	300	10M	BB	None	PH101 ☑
33	CK2040	LDR	300m♦	26	1.5k	55m	500m	INC	25	37m	200	1	1	300	10M	BB Dua	None	PH111 ☑
34	CK2043	LDR	250m♦	37	1.5k	45m	950m	INC	25	37m	150	1	1	300	1.0M	CF	None	PH105 Ø
35	CK2102	LDR	150m	56	1.5k	50m	500m	INC	5.0	60m	250	1	1	300	100M	CF	CA17	TO-8
36	CK2105	LDR	150m	56	1.5k	50m	500m	INC	5.0	60m	250	1	1	300	1.0u	CF	CA17	TO-8
37	CK2185	LDR	50m	37	1.5k§	3.0m	500m	LED	2.0	25m	100	1	1	300	1.0	CF	CA3	PH19b
38	VTL3A37	LDR	550m	47	1.5k§	50m	150m	INC	12	40m	250	1	1	300		XX	CA2	PH9 Ø
39	VTL3A41/2	LDR	550m	47	1.5k§	80m	900m	INC	1.5	55m	50	1	1	300 §		XX	CA2a	PH9b Ø
40	VTL3A42/2	LDR	550m	47	1.5k§	40m	750m	INC	3.0	15m	50	1	1	300 §		XX	CA2a	PH9b Ø
41	VTL5C4/2	LDR	175m%	57	1.5k	6.0m	1.5	LED	2.0	40m	30	1	1	300 §	400k	XXDual	CA4	PH8 Ø
42	CK2106	LDR	100m	46	1.5k	40m	950m	INC	5.0	60m	150	1	1	350	10M	CF	CA17	TO-8
43	VTL3A24	LDR	550m	47	1.5k§	80m	300	INC	6.0	40m	200	1	1	350	1.0M	XX	CA2	PH9 Ø
44	CK1113	LDR	100m	26	1.5k	5.0m	175m	LED	3.0	25m	100	1	1	400	10M	XX	None	PH100 Ø
45	CK1113P	LDR	100m	26	1.5k	5.0m	175m	LED	3.0	25m	100	1	1	400	10M	XX	None	PH101 ☑
46	VTL3A37/2	LDR	550m	47	1.5k§	50m	150m	INC	12	40m	125	1	1	450 §		XX	CA2a	PH9b Ø
47	CK2033	LDR	250m♦	36	1.5k	40	500	INC	10	18m	200	1	1	500	10M	XX	None	PH104 Ø
48	CK2186	LDR	125m	37	1.5k§	3.5m	500m	LED	2.0	25m	220	1	1	500	5.0	CF	CA3	PH19b
49	VTL3A26	LDR	550m	47	1.5k§	80m	500	INC	12	25m	200	1	1	500	1.0M	XX	CA2	PH9 Ø
50	VTL3A33	LDR	550m	47	1.5k§	90m	175	INC	4.0	60m	250	1	1	500	10M	XX	CA2	PH9 Ø
51	VTL5C1	LDR	175m%	57	1.5k	2.5m	35m	LED	2.0	40m	100	1	1	500	50M	XX	CA4a	PH8a Ø
52	VTL5C2	LDR	175m%	57	1.5k	3.5m	500m	LED	2.0	40m	200	1	1	500	1.0M	XX	CA4a	PH8a Ø
53	VTL3A25	LDR	550m	47	1.5k§	120m	300	INC	10	14m	200	1	1	600	1.0M	XX	CA2	PH9 Ø
54	VTL3B29	LDR	550m	47	1.5k§	8.0m	200m	GAS	120 §		200	1	1	650	1.0M	XX	CA5	PH9a Ø
55	CK1102	LDR	100m	56	1.5k	35m	350m	INC	1.0	50m	100	1	1	700	10M	XX	CA10	PH100 Ø
56	CK1102P	LDR	100m	56	1.5k	35m	350m	INC	1.0	50m	100	1	1	700	10M	XX	CA10	PH101 ☑
57	CK1112	LDR	100m♦	56	1.5k	30m	400m	INC	10	18m	100	1	1	700	10M	XX	None	PH100
58	CK1112P	LDR	100m♦	56	1.5k	30m	400m	INC	10	18m	100	1	1	700	10M	XX	None	PH101
59	VTL3A33/2	LDR	550m	47	1.5k§	90m	175	INC	4.0	60m	125	1	1	750 §	10M	XXDual	CA2a	PH9b Ø
60	VTL3A34	LDR	550m	47	1.5k§	100m	150	INC	6.0	40m	250	1	1	800	10M	XX	CA2	PH9 Ø
61	CK2160	LDR	150m♦	36	1.5k	35m	450m	INC	10	18m	75	1	2	850	10M	Dua	CA12	PH107 Ø
62	CK1101	LDR	100m	56	1.5k	2.0m	60m	GAS	120	3.5m	100	1	1	1.0k	10M	XX	CA10	PH100 Ø
63	CK1101P	LDR	100m	56	1.5k	2.0m	60m	GAS	120	3.5m	100	1	1	1.0k	10M	XX	CA10	PH101 ☑
64	CK2025P	LDR	100m♦	37	1.5k	30m	650m	INC	10	18m	100	1	1	1.0k	1.0M	BA	None	PH101 ☑
65	CK2041	LDR	250m♦	26	1.5k	8.0m	100m	GAS	120	3.5m	150	1	1	1.0k	10M	BB Dua	None	PH111 ☑
66	CK2042	LDR	250m♦	37	1.5k	35m	950m	INC	10	18m	150	1	1	1.0k	1.0M	CFDual	None	PH105 Ø
67	P1501	LDR	180m	36	1.5k	50m	50m	LED	2.1	25m	400	1	1	1.0k	5.0M	BA	CA28	PH333 ☑
68	VTL3B48	LDR	550m	47	1.5k§	20m	600m	GAS	120 §		100	1	1	1.0k	1.0M	XX	CA5	PH9a Ø
69	VTL3B19	LDR	550m	47	1.5k§	5.0m	30m	GAS	120 §		100	1	1	1.1k	50M	XX	CA5	PH9a Ø
70	CK2037	LDR	250m♦	26	1.5k	12m	450m	LED	3.0	25m	200	1	1	1.2k	1.0M	CFDual	None	PH104 Ø
71	VTL3A34/2	LDR	550m	47	1.5k§	100m	150	INC	6.0	40m	125	1	1	1.2k§	10M	XXDual	CA2a	PH9b Ø
72	P1501-01	LDR	180m	36	1.5k	50m	50m	LED	2.1	25m	400	1	1	1.4k	5.0M	BA	CA28a	PH333 ☑
73	CK2038	LDR	250m♦	37	1.5k	45m	850m	INC	10	18m	200	1	1	1.5k	1.0M	XX	None	PH104 Ø
74	CK2162	LDR	150m♦	26	1.5k	10m	600m	LED	3.0	25m	75	1	2	1.5k	1.0M	CFDual	CA12	PH107 Ø
75	VTL3B48/2	LDR	550m	47	1.5k§	20m	600m	GAS	120 §		50	1	1	1.5k§	1.0M	XXDual	CA5a	PH9c Ø
76	VTL5C7	LDR	175m%	57	1.5k	6.0m	1.0	LED	2.0	2.0m	50	1	1	1.5k	1.0M	XX	CA4a	PH8a Ø
77	VTL3A36	LDR	550m	47	1.5k§	90m	150	INC	12	25m	250	1	1	2.0k	10M	XX	CA2	PH9 Ø
78	VTL5C3	LDR	175m%	57	1.5k	2.5m	35m	LED	2.0	40m	250	1	1	2.0k	10M	XX	CA4a	PH8a Ø
79	CK2146	LDR	170m	37	1.5k	2.0m	30m	LED	3.0 Δ	25m	100	1	1	2.5k	10M	XX	CA3a	PH23e Ø
80	CK2187	LDR	125m	37	1.5k§	3.5m	50m	LED	2.0	25m	220	1	1	2.5k	50	CF	CA3	PH19b
81	CK2161	LDR	150m♦	37	1.5k	35m	850m	INC	10	18m	75	1	2	3.0k	1.0M	Dua	CA12	PH107 Ø
82	VTL3A35	LDR	550m	47	1.5k§	75m	100	INC	10	14m	250	1	1	3.0k	10M	XX	CA2	PH9 Ø
83	VTL3A36/2	LDR	550m	47	1.5k§	90m	150	INC	12	25m	125	1	1	3.0k§	10M	XX	CA2a	PH9b Ø
84	VTL5C3/2	LDR	175m%	57	1.5k	3.0m	50m	LED	2.0	40m	100	1	1	3.0k§	10M	XXDual	CA4	PH8 Ø
85	VTL5C6	LDR	175m%	57	1.5k	3.5m	50m	LED	2.0	40m	250	1	1	3.5k	100M	XX	CA4a	PH8a Ø
86	PLF5S387	LDR	250m	66	1.5k			LED	2.0	25m	320	1	1	4.0k	100M	BB	None	PH95 Ø
87	VTL3A32	LDR	550m	47	1.5k§	55m	100	INC	3.0	15m	250	1	1	4.0k	10M	XX	CA2	PH9 Ø
88	VTL3A35/2	LDR	550m	47	1.5k§	75m	100	INC	10	14m	125	1	1	4.5k§	10M	XXDual	CA2a	PH9b Ø
89	VTL3A31	LDR	550m	47	1.5k§	100m	100	INC	1.5	55m	250	1	1	5.0k	1.0M	XX	CA2	PH9 Ø
90	VTL3B28	LDR	550m	47	1.5k§	20m	200m	GAS	120 §		200	1	1	5.0k	1.0M	XX	CA5	PH9a Ø
91	VTL3A32/2	LDR	550m	47	1.5k§	55m	100	INC	3.0	15m	125	1	1	6.0k§	10M	XXDual	CA2a	PH9b Ø
92	VTL3B39	LDR	550m	47	1.5k§	5.0m	35m	GAS	120 §		250	1	1	6.0k	10M	XX	None	PH9a Ø
93	VTL3B18	LDR	550m	47	1.5k§	10m	30m	GAS	120 §		100	1	1	7.0k	50M	XX	CA5	PH9a Ø
94	VTL3A31/2	LDR	550m	47	1.5k§	100m	100	INC	1.5	55m	125	1	1	7.5k§	1.0M	XXDual	CA2a	PH9b Ø
95	VTL3B39/2	LDR	550m	47	1.5k§	5.0m	35m	GAS	120 §		125	1	1	9.0k§	10M	XXDual	CA5a	PH9c Ø
96	VTL3B38	LDR	550m	47	1.5k§	20m	35m	GAS	120 §		250	1	1	15k	10M	XX	None	PH9a Ø
97	CK1111	LDR		56	1.5k	2.0m	105m#	GAS	120	3.0m	300	1	1	30k	25M	XX	None	PH100
98	CK1111P	LDR		56	1.5k	2.0m	105m#	GAS	120	3.0m	300	1	1	30k	25M	XX	None	PH101
99	VTL3B49	LDR	550m	47	1.5k§	5.0m	600m	GAS	120 §		100	1	1	160k	1.0M	XX	CA5	PH9a Ø
100	CLM3500	LDR	100m	47%	1.6k	16m	350m	NEO			250	1	1	160	1.0M	XX	CA29	PH18 ☑
101	CLM3500/2	LDR	100m	47%	1.6k	16m	350m	NEO			250	1	1	160	1.0M	XX	CA30	PH363 ☑
102	CLM3000	LDR	250m	26	1.6k§	50m	70m	INC	14	27m	175	1	1	500	1.0M	XX	None	PH18 ☑
103	CLM3700	LDR	100m	47%	1.6k	100m	500m	NEO			250	1	1	1.0k	1.0M	XX	CA29	PH18 ☑
104	CK2177	LDR	350m♦	26	2.0k	40m	300m	INC	12	24m	250	1	1	400	10M	BB	None	PH19a Ø
105	CLM6500	LDR	50m	47%	2.0k	5.0m	80m	LED			100	1	1	400	10M	XX	CA3	PH21b Ø
106	CLM6000	LDR	50m	47%	2.0k	3.5m	500m	LED			60	1	1	500	500k	XX	CA3	PH19 Ø
107	CK2178	LDR	350m♦	26	2.0k	40m	500m	INC	12	24m	300	1	1	1.5k	10M	CF	None	PH19a Ø
108	CLM6200	LDR	50m	47%	2.0k	3.5m	12m	LED			60	1	1	10k	10M	XX	CA3	PH19 Ø
109	CLM3006A	LDR	85m	27	2.5k§	60m	170m	INC	6.0 Δ	40m	100	1	1		100M	XX	None	PH23 Ø
110	CLM3012A	LDR	65m	27	2.5k§	80m	210m	INC	12 Δ	40m	100	1	1		100M	XX	None	PH23 Ø

SYMBOLS AND CODES EXPLAINED IN INTERPRETER

25. OPTOCOUPLERS: PHOTOCELL OUTPUT - LDR-Output (Cont'd)

IN ORDER OF: (1) TYPE (2) CHANNELS (3) V(IO) (4) R(on) & (5) TYPE NUMBER

LINE No.	5 TYPE NUMBER	1 TYPE CODE	PD RATED MAX (W)	TEMP RNGE CODE - +	COUPLED CHAR. 3 VIO ISOL VOLT (V)	RISE TIME (s)	DECAY TIME (s)	INPUT TYPE	SOURCE RATED VOLT Δ-VR (V)	SOURCE RATED CURR. Δ-IR (A)	OUTPUT DC CELL VOLT *AC ΔPk (V)	CHANNELS 2 INPUT	CHANNELS OUTPT	4 ON RESIS. Ron (Ω)	OFF RESIS. Roff (Ω)	MATER. & FEATURE MAT	SCHE-MATIC	DRAWING
1	CLM3120A	LDR	100m	27	2.5k§	5.0m	60m	GAS	120 §		100	1	1		100M	XX	None	PH23 Ø
2	CLM4006A	LDR	85m	27	2.5k§	80m	170m	INC	6.0 Δ	40m	100	1	1		1.0M	XX	None	PH23 Ø
3	CLM4012A	LDR	65m	27	2.5k§	80m	180m	INC	12 Δ	40m	100	1	1		1.0M	XX	None	PH23 Ø
4	CLM4120A	LDR	100m	27	2.5k§	5.0m	250m	GAS	120 §		100	1	1		1.0M	10 §	None	PH23 Ø
5	CK2117	LDR	125m	46	2.5k	45m	275m	INC	24	45m	200	1	1	90	10M	BB	CA19	PH107
6	CK2114	LDR	125m	46	2.5k	50m	300m	INC	12	45m	200	1	1	125	10M	BB	CA19	PH107
7	CLM8000	LDR	125m	47%	2.5k§	3.5m	500m	LED			220	1	1	400	500k	XX	CA3	PH20 Ø
8	PLM5S310	LDR	50m	66	2.5k			LED	2.0	25m	80	1	1	500	10M	BB	None	PH94 Ø
9	VTL3B49AS	LDR	550m	47	2.5k	5.0m	600m	NEO	89 §		100	1	1	500	1.0M	BA	CA2	PH9
10	CLM8500/2	LDR	125m	47%	2.5k§	5.0m	150m	LED	2.8	15m	100	1	1	1.0k	1.0M	XX	CA4a	PH22 Ø
11	CLM51	LDR	50m	X7	2.5k	500u	60m	LED	2.5	16mΔ	250	1	1	1.25k	1.0M	BD	CA3b	PH11 ☑
12	CLM50	LDR	50m	X7	2.5k	500u	60m	LED	2.5	16mΔ	250	1	1	1.5k	1.0M	BD	CA3b	PH11 ☑
13	CLM61	LDR	50m	X7	2.5k	500u	60m	LED	2.5	16mΔ	250	1	1	1.75k	1.0M	BD	CA16	PH11 ☑
14	CK2024	LDR	100m	46	2.5k	60m	650m	GAS	120	3.0m	200	1	1	1.8k	10M	BB	CA18	PH107
15	CK2125	LDR	100m	46	2.5k	10m	20m	GAS	120	2.5m	100	1	1	2.0k	100M	BB	CA18	PH107
16	CLM60	LDR	50m	X7	2.5k	500u	60m	LED	2.5	16mΔ	250	1	1	2.0k	1.0M	BD	CA16	PH11 ☑
17	CLM8500	LDR	125m	47%	2.5k§	3.5m	20m	LED	2.8	15m	220	1	1	2.0k	10M	XX	CA4	PH21 Ø
18	CLM8600	LDR	100m	47%	2.5k§	3.5m	40m	LED	2.5	16m	500	1	1	2.0k	10M	XX	CA3	PH21 Ø
19	CLM8200	LDR	125m	47%	2.5k§	3.0m	20m	LED			220	1	1	2.8k	10M	XX	CA4	PH20a Ø
20	CLM8200/2	LDR	125m	47%	2.5k§	3.5m	30m	LED			100	1	1	5.0k	10M	XX	CA4a	PH89 Ø
21	CLM8500HV	LDR	125m	47%	2.5k§	3.5m	40m	LED	2.5	16m	400	1	1	5.0k	10M	XX	CA3	PH21 Ø
22	PLM5S317	LDR	50m	66	2.5k			LED	2.0	25m	250	1	1	5.0k	100M	BB	None	PH332 Ø
23	PL2H33	LDR	250m	66	3.0k	300m	30m	INC	200	2.0m	80	1	1	100	10M	BB	None	PH330 ☑
24	PL2H33-1	LDR	250m		3.0k	300m	30m#	GAS	120	2.0m	80	1	1	100	10M	BB	None	PH93 ☑
25	PL1033(1)	LDR	250m	66	3.0k	50m	75m	INC	10	15m	80	1	1	100	10M	BB	None	PH330 ☑
26	PL1033-1	LDR	250m	66	3.0k	50m	75m#	INC	10	15m	80	1	1	100	10M	BB	None	PH93 ☑
27	PL5S33-1	LDR	250m		3.0k			LED	2.0	25m	80	1	1	200	10M	BB	None	PH93 ☑
28	PL5S33	LDR	400m	66	3.0k	100u	100m	LED	2.0	25m	80	1	1	250	10M	BB	None	PH93 ☑
29	PL2H36	LDR	250m	66	3.0k	300m	30m	INC	200	2.0m	320	1	1	400	50M	BB	None	PH330 ☑
30	PL2H36-1	LDR	250m		3.0k	300m	30m#	GAS	120	2.0m	320	1	1	400	100M	BB	None	PH93 ☑
31	PL1036	LDR	250m	66	3.0k	50m	75m	INC	10	15m	320	1	1	400	50M	BB	None	PH330 ☑
32	PL1036-1	LDR	250m	66	3.0k	50m	75m#	INC	10	15m	320	1	1	400	100M	BB	None	PH93 ☑
33	MCD527	LDR	210m	27	3.0k	1.0m	60m	LED	1.7	30m	150	1	1	1.0k	2.0M	BB	None	PH65 Ø
34	MCD7212P	LDR	100m	26	3.0k	1.0m	50m	LED	1.9	30m	150	1	1	1.0k	1.0M	BA	None	PH317
35	MTN711A	LDR	50m	25	3.0k	1.0	80m	GAS			200	1	1	1.0k	500k	BA	CA25	PH319
36	MCD725	LDR	225m	26	3.0k	10m	10m	LED	2.0 Δ	20m	350	1	1	1.1k	1.0M	CF-5 §	CA3	PH96 Ø
37	P1760	LDR	50m	35	3.0k	5.0m	12m	NEO	100	1.7m	150	1	1	1.5k	1.0M	BA	None	PH334 Ø
38	P1760-04	LDR	50m	35	3.0k	5.0m	12m	NEO	100	1.7m	150	1	1	1.5k	1.0M	BA	None	PH334a Ø
39	MCD526	LDR	180m	27	3.0k	2.0m	80m	LED	1.9	6.0m	150	1	1	2.0k	3.0M	BB	None	PH65 Ø
40	PL5S36	LDR	400m	66	3.0k	100u	100m	LED	2.0	25m	320	1	1	2.0k	100M	BB	None	PH93 ☑
41	PL5S36-1	LDR	250m		3.0k			LED	2.0	25m	320	1	1	2.0k	100M	BB	None	PH93 ☑
42	MCD725E	LDR	80m	26	3.0k	10m	10m	LED	1.8	15m	300	1	1	2.5k	3.0M	BA	CA3a	PH96a
43	MCD7212F	LDR	100m	26	3.0k	1.0m	50m	LED	1.9	30m	150	1	1	4.0k	500k	BA	None	PH318
44	MCD537	LDR	165m	27	3.0k	3.0m	5.0m	LED	1.8	30m	300	1	1	5.0k	100M	BB	None	PH65 Ø
45	MCD718L	LDR	100m	25	3.0k	1.0m	50m	LED	2.0	10m	350	1	1	16k	2.0M	BA	None	PH65
46	MCD718H	LDR	100m	25	3.0k	1.0m	50m	LED	2.0	10m	350	1	1	26k	2.0M	BA	None	PH65
47	P873G35-552	LDR	120m	35	5.0k	4.0m	10m	LED	2.1	25m	100	1	1	200	1.0M	BA	CA27	PH299 Ø
48	P873G35-380	LDR	100m	35	5.0k	8.0m	8.0m	LED	2.0	20m	200	1	1	1.0k	1.0M	BA	CA20	PH299
49	P873G35-687	LDR	170m	35	5.0k	5.0m	7.0m	LED	2.1	25m	400	1	1	1.0k	1.0M	BA	CA27	PH299 Ø
50	P873G35-911	LDR	100m	35	5.0k	5.0m	5.0m	LED	2.0	20m	100	1	1	1.0k	1.0M	BA	CA21	PH301
51	P873-25	LDR	170m	36	5.0k	5.0m	5.0m	LED	2.1	25m	400	1	1	2.5k	10M	BA	CA27	PH299
52	P873G35-201B	LDR	100m	35	5.0k	4.0m	1.0m	LED	2.0	20m	200	1	1	5.0k	10M	BA	CA20	PH299
53	PLM5S387	LDR	200m		5.0k			LED	2.0	25m	320	1	1	5.0k	100M	BB	None	PH94 Ø
54	P873-13	LDR	100m	35	5.0k	4.0m	6.0m	LED	2.0	20m	100	1	2	10k	10M	BA	CA22	PH302
55	CLM9000	LDR	400m		7.0k	3.5m	20m	LED	2.8	16m	3500	1	1	1.2M	1000M	XX	CA4a	PH21c
56	PLT10384	LDR	100m	66	7.5k	90m	125m	INC	10	15m	80	1	1	250	10M	BB	None	PH64a Ø
57	PLT2H384	LDR	100m	66	7.5k	300m	30m	INC	200	2.0m	80	1	1	500	10M	BB	None	PH64a Ø
58	PLT10387	LDR	100m	66	7.5k	90m	100m	INC	10	15m	320	1	1	3.0k	50M	BB	None	PH64a Ø
59	PLT2H387	LDR	100m	66	7.5k	300m	30m	INC	200	2.0m	320	1	1	10k	50M	BB	None	PH64a Ø
60	PLS5S380	LDR	100m	66	10k			LED	2.0	25m	80	1	1	250	10M	BB	None	PH23d Ø
61	CK2032	LDR	250m♦	36	10k	30m	300m	INC	10	18m	250	1	1	450	10M	BB	None	PH100a Ø
62	CK2034	LDR	250m♦	37	10k	5.0m	175m	LED	3.0	25m	250	1	1	500	10M	CF	None	PH100a Ø
63	CK2035	LDR	200m♦	37	10k	8.0m	350m	GAS	120	3.5m	250	1	1	1.0k	10M	CF	None	PH100a Ø
64	CK2029	LDR	250m♦	36	10k	35m	325m	INC	10	35m	250	1	1	2.0k	100M	BB	None	PH100a Ø
65	CK2129	LDR	250m♦	37	10k	10m	350m	GAS	120	3.5m	250	1	1	2.0k	10M	CF	None	PH100a Ø
66	PLS5S387	LDR	100m	66	10k			LED	2.0	25m	320	1	1	4.0k	100M	BB	None	PH23d Ø
67	CK1108	LDR	250m♦	56	25k	40m	650m	INC	5.0	200m	300	1	1	250	10M	XX	CA2	PH102 Ø
68	CK1106	LDR	250m	26	25k	50m	700m	GAS	120	25m	250	1	1	300	10M	XX	None	PH102 Ø
69	CK2066	LDR	250m♦	27	25k	40m	650m	INC	25	37m	300	1	1	350	10M	CF	None	PH102 Ø
70	CK2065	LDR	250m♦	27	25k	30m	500m	INC	10	18m	300	1	1	500	10M	CF	None	PH102 Ø
71	CK2030	LDR	250m♦	26	25k	30m	450m	INC	10	18m	300	1	1	700	10M	BB	None	PH102 Ø
72	CK2067	LDR	250m♦	26	25k	10m	650m	LED	3.0	40m	300	1	1	1.0k	10M	CF	None	PH102 Ø
73	CK1105	LDR	250m	56	25k	10m	800m	GAS	120	3.5m	300	1	1	10k	10M	XX	CA2	PH102 Ø
74	CK2060	LDR		46					6.0	120m		2	2			XX	CA11	PH105 Ø
75	CK2170	LDR	150m♦	36	500	35m	800m	INC	10	18m	75	2	1	850	1.0M	Dua	CA13	PH106 ☑
76	CK2171	LDR	150m♦	37	500	35m	950m	INC	10	18m	75	2	1	2.0k	1.0M	Dua	CA13	PH106 ☑

PHOTOVOLTAIC OUTPUT

80	SSC600	PVC		37		10m	10m	GAS	100 §	1.9m		1	1			AD	CA8	PH24 ☑
81	VTL5C8	PVC	175m	57	2.5k	4.0m	60m	LED	2.2	10m	500	1	1	2.0k	10M	BA	None	None

SYMBOLS AND CODES EXPLAINED IN INTERPRETER

26. OPTOCOUPLERS: PHOTOTRANSISTOR OUTPUT - NPN-Output (Cont'd)

IN ORDER OF: (1) V(IO) (2) CHANNELS (3)CURR. TRANSFER RATIO & (4) TYPE No.

LINE No.	4 TYPE NUMBER	PD RATED MAX (W)	IC RATED MAX (A)	VCE RATED MAX (V)	2 CHAN-NELS	FWD. CURR. IF (A)	1 MAX ISOL. VOLT VIO (V)	TEMP RNG. CODE - +	COUPLED CHARACTS. 3 CTR=IC/IF(MIN) CURR TRANSF RAT. hF	IF (A)	VCE (V)	RESP. TIME (S)	MAX INPUT DIODE CHAR. FWD.VOLT VF (V)	IF (A)	MAX.O/P TRANS. CHAR. COLL. SAT. VOLT VCE(SAT) (V)	IC (A)	IF (A)	MAT	SCHE-MATIC	DRAWING
OPTOCOUPLER, NPN-OUTPUT																				
4	CNY70	100m	50m	32	1	50m		5A%					1.6	50m				BC	CB1	PH291a
5	ON3301	50m			1	80m		4A%				80n	1.5	80m				AD	CB21	None
6	OPB825A	80m		30	1	50m		48					1.6	20m	.40	250u	20m	AD	CB1	PH175
7	OPB825B	80m		30	1	50m		48					1.6	20m	.40	250u	20m	AD	CB1	PH176
8	CNY71	100m	100m	32	1	60m		5C	3.0	10m	5.0	4.0u*	1.2	50m	300m	1.0m	10m	AD	CB12	PH16z
9	HCPL2503	100m♦			1	25m		5A	9.0 △	16m			1.7	16m					CE6a	PH56e
10	CNY75(A)	250m	50m	70	1	60m		5A%	15 △	1.0m	5.0	3.2u*	1.6	50m	300m	1.0m	10m	BC	CB12	PH16z
11	IL211	250m		30	1	60m		5F%	20 △	10m	10	3.0u	1.5	10m	400m	2.0m	10m	CB	None ♦	PH353 ⊠
12	IL215	250m		30	1	60m		5F%	20 △	1.0m	5.0	3.0u	1.3	1.0m	400m	100u	1.0m	CB	None ♦	PH353 ⊠
13	OPL1264A			32	1			48	25	10m	5.0	4u	1.5	20m	400m	1.6m	10m		CB28	PH135
14	IL205	250m		70	1	60m		5F%	40 △	10m	10	3.0u	1.5	60m	400m	2.0m	10m	CB	None ♦	PH353 ⊠
15	IL212	250m		30	1	60m		5F%	50 △	10m	10	3.0u	1.5	10m	400m	2.0m	10m	CB	None ♦	PH353 ⊠
16	IL216	250m		30	1	60m		5F%	50 △	1.0m	5.0	3.0u	1.3	1.0m	400m	100u	1.0m	CB	None ♦	PH353 ⊠
17	OPL1264B			32	1			48	50	10m	5.0	4u	1.5	20m	400m	1.6m	10m		CB28	PH135
18	PS2013	150m	80m	40	1	80m		3A	50 △	5.0m	5.0	3.0u	1.4	10m	300m	2.0m	10m	BC	CB4	PH16ab
19	PS2019	150m	80m	40	1	80m		3A	50 △	5.0m	5.0	3.0u	1.4	10m	300m	2.0m	10m	BC	CB4a	PH16ab
20	TLP533	200m	50m	30	1	70m		3A	50 △	5m	5.	200u	1.3	10m	0.4	1.0m	5.0m		CB4	PH159
21	TLP534	200m	50m	30	1	70m		3A	50 △	5m	5.	200u	1.3	10m	0.4	1.0m	5.0m		CB1C	PH159
22	TLP535	200m	100m	35	1	70m		5F	50 △	10m	10.	200u	1.5	10m	0.3	2.0m	10m		CB4C	PH159
23	CNY75A	250m	50m	70	1	60m		XA§	63 △	10m	5.0	3.2u*	1.6	50m	300m	1m	10m	BC	None	PH290
24	CNY75GA	250m	50m	70	1	60m		XA§	63 △	10m	5.0	3.2u*	1.6	50m	300m	1m	10m	BC	None	PH290
25	IL206	250m		70	1	60m		5F%	63 △	10m	10	3.0u	1.5	60m	400m	2.0m	10m	CB	None ♦	PH353 ⊠
26	CNY75B(A)	250m	50m	70	1	60m		XA§	100 △	10m	5.0	3.2u*	1.6	50m	300m	1m	10m	BC	None	PH290
27	CNY75GB	250m	50m	70	1	60m		XA§	100 △	10m	5.0	3.2u*	1.6	50m	300m	1m	10m	BC	None	PH290
28	IL207	250m		70	1	60m		5F%	100 △	10m	10	3.0u	1.5	60m	400m	2.0m	10m	CB	None ♦	PH353 ⊠
29	IL213	250m		30	1	60m		5F%	100 △	10m	10	3.0u	1.5	10m	400m	2.0m	10m	CB	None ♦	PH353 ⊠
30	IL217	250m		30	1	60m		5F%	100 △	1.0m	5.0	3.9u	1.3	1.0m	400m	100u	1.0m	CB	None ♦	PH353 ⊠
31	OPL1264C			32	1			48	100	10m	5.0	4u	1.5	20m	400m	1.6m	10m		CB28	PH135
32	CNY75C	250m	50m	70	1	60m		XA§	160 △	10m	5.0	3.2u*	1.6	50m	0.3	1m	10m		None ♦	PH290
33	CNY75GC	250m	50m	70	1	60m		XA§	160 △	10m	5.0	3.2u*	1.6	50m	300m	1m	10m	BC	None	PH290
34	4N55TXVB	50m			2	20m		5C	.09	16m			1.8	20m					CB23	PH30
35	TLP521-4	150m	50m	35	4	50m		3A	50 △	5m	5.		1.3	10m	0.4	1.0m	5.0m		CB31	PH33
36	6N140	50m♦			4	10m		5A	300 △	0.5m			1.7	1.6m				CA	CE21	PH30a
37	CNY50-1	150m	100m	50	1	100m	1.0	5C§	1.0	10m	400m	3.0u	1.2	10m	400m	3.0m	10m	CB	CB22	PH13b Ø
38	CNY50-2	150m	100m	50	1	100m	1.0	5C§	1.6	10m	400m	3.0u	1.2	10m	400m	3.0m	10m	CB	CB22	PH13b Ø
39	MCT2200	260m			1	3.0	5.3	5A	20 △	10m	5.0	6.0	1.5	60m	45 †	1.0m	0	BC	CB4	PH16w
40	MCT2202	260m			1	3.0	5.3	5A	63 △	10m	5.0	6.0	1.5	60m	45 †	1.0m	0	BC	CB4	PH16w
41	MCT2201	260m			1	3.0	5.3	5A	100 △	10m	5.0	6.0	1.5	60m	45 †	1.0m	0	BC	CB4	PH16w
42	3C91B	230m	50m	50	1	50m	500	5C§	200m	10m	5.0	2.0u	1.5	50m	400m	2.0m	50m	CB	CB3e	TO-72
43	3C92B	230m	50m	50	1	50m	500	5C§	200m	10m	5.0	2.0u	1.5	50m	400m	2.0m	50m	CB	CB3	TO-72
44	CNY18III	250m	100m	32	1	60m	500	5A%	250m	10m	5.0	1.7u*	1.7	60m	200m	1.0m	10m	BC	None	PH17n
45	CNY18IV	250m	100m	32	1	60m	500	5A%	400m	10m	5.0	1.7u*	1.7	60m	200m	1.0m	10m	BC	None	PH17n
46	CNY18V	250m	100m	32	1	60m	500	5A%	600m	10m	5.0	1.7u*	1.7	60m	200m	1.0m	10m	BC	CB3d	PH7d
47	CNY18VI	250m	100m	32	1	60m	500	5A%	1.0	10m	5.0	1.7u*	1.7	60m	200m	1.0m	10m	BC	CB3d	PH7d
48	SPX1003-1	85m		10	1	30m	500	6A	2.6 △	15m	5.0	3.0u	2.0	30m	300m	200u	15m	AD	CB1	PH38 ⊠
49	SPX1003-2	85m		50	1	30m	500	6A	13 △	15m	5.0	3.0u	1.5	30m	300m	200u	15m	AD	CB1	PH38 ⊠
50	3C91C			50	1		500		40	10m	5.0	10u	1.8	50m	0.4	2.0	50m	AD	CB1	PH26
51	3C92C			50	1		500		40	10m	5.0	10u	1.8	50m	0.4	2.0m	50m	AD	CB3	PH26
52	CNY18-5	100m	100m	32	1	60m	500	5A§	63	10m	5.0	2.0u	1.3	60m	.10	1.0m	10m	BC	None	PH17 Ø
53	MII66003-001	300m	50m	35	5	40m	500	5C	75m	2.0m	5.0	15u	1.3	10m	300m	2.5m	20m	AD	CB34	PH279
54	MII66003-002	300m	50m	35	5	40m	500	5C	100m	2.0m	5.0	15u	1.3	10m	300m	5.0m	20m	AD	CB34	PH279
55	MII66003-003	300m	50m	35	5	40m	500	5C	200m	2.0m	5.0	20u	1.3	10m	300m	10m	20m	AD	CB34	PH279
56	CNX91(A)	230m	100m	50	1	100m	.8k	5C§	.40	10m	.40	5u*	1.6	10m	.40	4.0m	10m	BC	CB25	None
57	CNX92(A)	230m	100m	50	1	100m	.8k	5C§	.40	10m	.40	5u*	1.6	10m	.40	4.0m	10m	BC	CB25	None Ø
58	CNY35	400m	100m	30	1	60m	950	5A	100m	10m	10		1.8	10m	400m	500u	10m	AD	CB12	PH16z
59	4N22A	300m	50m	35	1	40m	1.0k	5C		10m	5.0	15u	1.3	10m	300m	2.5m	20m	AD	CB2b	PH13 Ø
60	4N23A	300m	50m	35	1	40m	1.0k	5C		10m	5.0	15u	1.3	10m	300m	5.0m	20m	AD	CB2b	PH13 Ø
61	4N24A	300m	50m	35	1	40m	1.0k	5C		10m	5.0	20u	1.3	10m	300m	10m	20m	AD	CB2b	PH13 Ø
62	CNX44A	150m	100m	60	1	100m	1.0k	5C§		10m	.40	5u	1.3	10m	.40	2.0m	10m		CB1a	TO-5 Ø
63	MII66022(A)	200m	40m	35	1	30m	1.0k	5C										BC	None	PH293
64	MCT4	250m		30	1	40m	1.0k	5C	3.5m	10m	10	2.0u	1.5	40m	100m	2.0m	50m	BC	CB1F	PH17
65	MCT4R	250m			1	3.0	1.0k	5C	3.5m	10m	10	2.0u	1.5	40m	100m	500u	10m	BC	CB1F	PH17
66	IL12(2)	250m		30	1	100m	1.0k	5A	20m	10m	5.0	2.0u	1.5	10m	500m	2.0m	50m	BC	None	PH31 ⊠
67	H11A5	150m♦	100m	30	1	60m	1.0k	5A	100m	10m	10	3.0u	2.0	10m	400m	500u	10m	AD	CB4 ♦	PH16ad ⊠
68	TLP501	100m		45	1	60m	1.0k	3A	100m	10m	10	5.0u	1.2	10m				AD	None ♦	PH14a Ø
69	3N243	200m	30m	30	1	40m	1.0k	5C	150m	10m	10	10u	1.3	10m	300m	1.5	20m	AD	CB3b	TO-206AØ
70	OPI140	200m♦	30m	30	1	40m	1.0k	5C	150m	10m	10	2.0u	1.5	40m	500m	1.6m	40m	AD	None	PH17d
71	PS1001	250m	50m	30	1	60m	1.0k	2A	200m	20m	5.0	5.0u	1.4	20m	300m	2.0m	20m	AD	CB14	PH112 Ø
72	OPI102	300m	50m	35	1	40m	1.0k	5C	250m	10m	5.0	3.0u	1.3	10m	300m	2.5m	20m	AD	CB2	PH13 Ø
73	3N244	200m	30m	30	1	40m	1.0k	5C	300m	10m	10	10u	1.3	10m	300m	3.0	20m	AD	CB3b	TO-206AØ
74	CNX44(A)	150m	100m	50	1	100m	1.0k	5C§	.30	10m	.40	5u	1.3	10m	.40	2.0m	10m		CB1a ♦	TO-5 Ø
75	CNX46(A)	150m	100m	50	1	100m	1.0k	5C§	.30	10m	.40	5u	1.3	10m	.40	2.0m	10m		CB1e	TO-5 Ø
76	3N245	200m	30m	30	1	40m	1.0k	5C	600m	10m	10	15u	1.3	10m	300m	6.0	20m	AD	CB3b	TO-206AØ
77	TIL102	300m	50m	35	1	40m	1.0k	5C%	600m†	10m	5.0	3.0u	1.3	10m	300m	2.5m	20m	CB	CB2	PH13 Ø
78	TIL120	190m	50m	35	1	40m	1.0k	5C	600m†	10m	5.0	3.0u	1.3	10m	300m	2.5m	20m	CB	None ♦	PH17 Ø
79	OPI103	300m	50m	35	1	40m	1.0k	5C	1.0	10m	5.0	3.0u	1.3	10m	300m	10m	20m	AD	CB2	PH13 Ø
80	TIL121	190m	50m	35	1	40m	1.0k	5C	1.0 †	10m	5.0	6.0u	1.3	10m	300m	10m	20m	CB	None ♦	PH17 Ø
81	TIL103	300m	50m	35	1	40m	1.0k	5C%	1.5 †	10m	5.0	6.0u	1.3	10m	300m	10m	20m	CB	CB2	PH13 Ø
82	3N262	190m	50m	40	1	10m	1.0k	5C%	5.0	1.0m	5.0	20u*	1.5	10m	300m	1m	2m	BC	CB40	PH17 Ø
83	4N47	300m	50m	40	1	40m	1.0k	5C%	5.0	10m	5.0	20u	1.5	10m	300m	500u	2.0m	CB	CB13	PH13 Ø
84	4N48	300m	50m	40	1	40m	1.0k	5C	8.0	10m	5.0	20u	1.5	10m	300m	1.0m	2.0m	CB	CB13	PH13 Ø
85	4N49	300m	50m	40	1	40m	1.0k	5C	9.0	10m	5.0	20u	1.5	10m	300m	2.0m	2.0m	CB	CB13	PH13 Ø
86	3N263	190m	50m	40	1	10m	1.0k	5C%	10	1.0m	5.0	25u*	1.7	10m	300m	2m	2m	BC	CB40	PH17 Ø
87	K8950			30	1		1.0k		15	10m	10	12u	1.5	40m	0.5	1.6m	40m	AD	FA23c	PH7b
88	K8940			35	1		1.0k		25	10m	5.0	12u	1.3	10m	0.3	2.5m	20m	AD	FA43	PH275
89	4N22	300m	50m	35	1	40m	1.0k	5C%	40 △	10m	5.0	15u*	1.3	10m	300m	2.5m	20m	CB	CB2	PH13 Ø
90	3N261	190m	50m	40	1	10m	1.0k	5C%	50 △	1.0m	5.0	20u*	1.7	10m	300m	500u	2m	BC	CB40	PH17 Ø
91	K120P	100m	100m	35	1	60m	1.0k	5C	50 △	10m	5.0	20u*	1.5	50m	0.3	2.5m	20m	BC	CB40	TO-72
92	OPI210		40m	35	1	20m	1.0k	5C	50 △	10m	5.0	3.0u	1.5	10m	300m	10m	20m	AD	CB1a	PH343
93	4N23	300m	50m	35	1	40m	1.0k	5C%	80 △	10m	5.0	15u*	1.3	10m	300m	5.0m	20m	CB	CB2	PH13 Ø
94	K8941			35	1		1.0k		100	10m	5.0	18u	1.3	10m	0.3	10m	20m	AD	FA43	PH275
95	4N24	300m	50m	35	1	40m	1.0k	5C%	150 △	10m	5.0	20u*	1.3	10m	300m	10m	20m	CB	CB2	PH13 Ø
96	OPI211		40m	35	1	20m	1.0k	5C	200 △	10m	5.0	3.0u	1.5	10m	300m	10m	20m	AD	CB1a	PH343
97	OC33(1)	150m	16m	30	1	50m	1.0k	2A	300 †			4.0u	1.6	50m	400m	2.0m	16m	AD	CB14	PH112 Ø
98	4N38	250m		80	1	80m	1.5k	5A§				5u	1.5	10m	1.0	4.0m	20m	AD	None ♦	PH16ad ⊠
99	4N50	300m♦	50m	40	1	40m	1.5k	5B				20u	1.5	10m	300m	10m	10m	AD	CB41	PH323
100	H74A1	300m♦	50m	15	1	60m	1.5k	07				20u						AD	CB4	PH16x
101	SL5504		100m	80	1	60m	1.5k	5F%				50u	1.3	20m	.4	1m	6m		CB25 ♦	PH16ad ⊠
102	SL5505S		100m	22	1	60m	1.5k	5F%				850n	1.3	20m	.4	1m	6m		None ♦	None ⊠
103	SL5511		100m	30	1	60m	1.5k	5F%				20u	1.3	20m	.4	1m	6m		CB25 ♦	PH16ad ⊠
104	OPI2150	250m	50m	20	1	60m	1.5k	5A	20m	10m	5.0	2.0u	1.5	10m	500m	2.0m	50m	AD	CB4	PH58c ⊠
105	H11A10	500m♦	100m	30	1	50m	1.5k	5A	100m	10m	10	5.0u	1.5	10m	400m	500u	10m	AD	CB4	PH16x
106	H11AA2	500m♦	100m	30	1	60m	1.5k	5A	100m	10m	10	5.0u	1.8	10m	400m	500u	10m	AD	CB12	PH16x
107	H11D4	300m♦	100m	7.0	1	60m	1.5k	5A	100m	10m	10	5.0u	1.5	10m	400m	500u	10m	AD	CB4	PH16x

SYMBOLS AND CODES EXPLAINED IN INTERPRETER

26. OPTOCOUPLERS: PHOTOTRANSISTOR OUTPUT - NPN-Output (Cont'd)

IN ORDER OF: (1) V(IO) (2) CHANNELS (3)CURR. TRANSFER RATIO & (4) TYPE No.

LINE No.	4 TYPE NUMBER	PD RATED MAX (W)	IC RATED MAX (A)	VCE RATED MAX (V)	2 CHAN-NELS	FWD. CURR. IF (A)	1 MAX ISOL. VOLT VIO	TEMP RNG. CODE - +	COUPLED CHARACTS. 3 CTR=IC/IF(MIN) CURR TRANSF RAT. hF	IF (A)	VCE (V)	RESP. TIME (S)	MAX INPUT DIODE CHAR. FWD.VOLT VF (V)	IF (A)	MAX.O/P TRANS. CHAR. COLL. SAT. VOLT VCE(SAT) (V)	IC (A)	IF (A)	MAT	SCHE-MATIC	DRAWING
1	OPI2151	250m	50m	30	1	60m	1.5k	5A	100m	10m	5.0	2.0u	1.5	10m	400m	250u	10m	AD	CB4	PH58c ☑
2	OPI6100	400m		200	1	60m	1.5k	5A	100m	10m	5.0	5.0u	1.5	10m	400m	500u	10m		CB4	PH16 ☑
3	OPI2500	250m	50m	30	1	60m	1.5k	5A	125m	16m	400m	2.0u	1.5	10m	400m	2.0m	16m	AD	CB12	PH58c ☑
4	CNY33	400m	100m	300	1	60m	1.5k	5A	200m	10m	10	5.0u	1.5	10m	400m	500u	10m	AD	CB4	PH16z
5	H11A2	250m	100m	30	1	60m	1.5k	5A§	200m	10m	10	3.0u	1.5	10m	400m	500u	10m	BC	CB4 ♦	PH16ad
6	H11D2	300m♦	100m	7.0	1	60m	1.5k	5A	200m	10m	10	5.0u	1.5	10m	400m	500u	10m	AD	CB4	PH16x
7	H11D3	300m♦	100m	7.0	1	60m	1.5k	5A	200m	10m	10	5.0u	1.5	10m	400m	500u	10m	AD	CB4	PH16x
8	ON3100	75m	30m	30	1	50m	1.5k	28	200m	5.0m	10	4.0u	1.5	50m	400m	2.0m	20m		None	PH16f ☑
9	OPI2152	250m	50m	30	1	60m	1.5k	5A	200m	10m	5.0	3.0u	1.4	16m	400m	2.0m	16m	AD	CB4	PH58c ☑
10	OPI6000	400m		300	1	60m	1.5k	5A	200m	10m	5.0	5.0u	1.5	10m	400m	500u	10m		CB4	PH16 ☑
11	TIL112	250m		20	1	100m	1.5k	5F%	200m†	10m	5.0	2.0u	1.5	10m	500m	2.0m	50m	CB	None ♦	PH16 ☑
12	TIL118	250m		20	1	100m	1.5k	5F%	200m†	10m	5.0	2.0u	1.5	10m	500m	2.0m	50m	CB	None ♦	PH16 ☑
13	TIL111	250m		30	1	100m	1.5k	5F%	400m†	10m	400m	5u	1.4	16m	400m	2.0m	16m	CB	None ♦	PH16 ☑
14	OPI2153	250m	50m	30	1	60m	1.5k	5A	500m	10m	5.0	3.0u	1.4	16m	400m	4.0m	16m	AD	CB4	PH58c ☑
15	4N37	500m	100m	30	1	60m	1.5k	5A	1.0	10m	10	7u	1.5	10m	300m	500u	10m	CB	CB4 ♦	PH16ad ☑
16	OPI2154			30	1		1.5k		10	0.5m	0.5	2u	1.5	10m	.35	1.0m	5.0m	AD	CB4	PH58a
17	IL256(A)			30	1		1.5k		20 Δ	10m	10				400m	2.0m	10m	XX	None ♦	PH353 ☑
18	OPI2155			30	1		1.5k		20	1.0m	0.5	2u	1.5	10m	.35	1.0m	5.0m	AD	CB4	PH58a
19	SL5500	250m	100n	30	1	60m	1.5k	5F%	23	10m	0.4	3.0u	1.3	20m	0.4	10m	50m	AD	CB25 ♦	PH16ad ☑
20	SL5501	250m	100n	30	1	60m	1.5k	5F%	40	6m	0.5	3.0u	1.5	20m	0.4	1m	6m	AD	CB25 ♦	PH16ad ☑
21	MCT66	400m	30m	30	2	60m	1.5k	5A	60m	10m	10	15u	1.5	20m	400m	2.0m	40m	AD	CB5 #	PH56e
22	4N55	50m	16m		2	20m	1.5k	5C	.09	16m		6.0u	1.8	20m					CB23	PH30
23	4N55TXV	50m	16m		2	20m	1.5k	5C	.09	16m		6.0u	1.8	20m					CB23	PH30
24	MCT6	400m	30m	30	2	60m	1.5k	5A	200m	10m	10	15u	1.5	20m	400m	2.0m	16m	AD	CB5 #	PH56e
25	MII66026	50m	20m		2	20m	1.5k	5C	25 Δ	16m			1.8	20m	300m				CB23	PH30
26	MCT277	260m	40m	45	1	60m	1.7k	5A	1.0	10m	10	15u	1.5	20m	400m	2.0m	16m	AD	CB4	PH16v
27	MII66022-2	200m	50m	50	1	40m	2.0k	5C				30u*	1.7	50m	300m	200u	15m	AD	CB14	PH293
28	MII66022-3	200m	50m		1	40m	2.0k	5C				20u*	1.7	50m	300m	200u	7.0m	AD	CB14	PH293
29	MII66022-4	200m	50m		1	40m	2.0k	5C				20u*	1.8	50m	300m	1.0m	15m	AD	CB14	PH293
30	MII66039-2	200m	50m		1	40m	2.0k	5C				30u*	1.7	50m	300m	200u	15m	AD	CB14	PH293
31	MII66039-3	200m	50m		1	40m	2.0k	5C				20u*	1.7	50m	300m	200u	7.0m	AD	CB14	PH293
32	MII66039-4	200m	50m		1	40m	2.0k	5C				20u*	1.8	50m	300m	1.0m	15m	AD	CB14	PH293
33	OC22(1)	150m		20	1	50m	2.0k	2A				4.0u	1.6	50m	400m	2.0m	16m	AD	CB1h	PH324 Ø
34	PC619(2)	300m	100m		1	60m	2.0k	2A				15u							CB32	None *
35	ON3110	120m	50m	30	1	50m	2.0k	28	30m	5.0m	10	3.0	1.5	50m	0.4	1.0m	5.0m	AD	CB1	PH16f ☑
36	4N27	250m	80m	30	1	80m	2.0k	5A§	100m	10m	10	3.0u*	1.5	10m	500m	2.0m	50m	CB	CB4 ♦	PH16ad ☑
37	4N28	250m	100m	30	1	80m	2.0k	5A§	100m	10m	10	3.0u*	1.5	10m	500m	2.0m	50m	CB	CB4 ♦	PH16ad ☑
38	H11A4	250m	100m	30	1	60m	2.0k	5A§	100m	10m	10	3.0u	1.5	10m	400m	500u	10m	BC	CB4 ♦	PH16ad
39	4N25	200m	100m	30	1	80m	2.0k	5A§	200m	10m	10	3u*	1.5	10m	500m	2.0m	50m	CB	CB4 ♦	PH16ad ☑
40	4N25A	250m	100m	30	1	80m	2.0k	5A§	200m	10m	10	3u*	1.5	10m	500m	2.0m	50m	CB	CB4 ♦	PH16ad ☑
41	4N26	250m	100m	30	1	80m	2.0k	5A§	200m	10m	10	3.0u*	1.5	10m	500m	2.0m	50m	CB	CB25 ♦	PH16ad ☑
42	CNY47	150m	30m	30	1	30m	2.0k	A §	200m	10m	400m	3.0u	1.5	10m	400m	2.0m	10m	AD	CB4	PH16ad
43	H11A3	250m	100m	30	1	60m	2.0k	5A§	200m	10m	10	3.0u	1.5	10m	400m	500u	10m	BC	CB4 ♦	PH16ad
44	PS2010	250m	100m	30	1	80m	2.0k	5A	.20	10m	5.0	4.0u	1.4	10m	300m	2.0m	10m	AD	CB4	PH16ae
45	CNY47A	150m	30m	30	1	30m	2.0k	A §	400m	10m	400m	5.0u	1.5	10m	400m	4.0m	10m	AD	CB4	PH16ad
46	H11A1	250m	100m	30	1	60m	2.0k	5A§	500m	10m	10	3.0u	1.5	10m	400m	500u	10m	BC	CB4	PH16ad ☑
47	PC613(2)	200m	50m	35	1	70m	2.0k	2A	500m	5.0m	5.0	4.0u	1.4	20m	200m	1.0m	20m		CB4	PH16n ☑
48	PC614(2)	200m	50m	35	1	70m	2.0k	2A	500m	5.0m	5.0	4.0u	1.4	20m	200m	1.0m	20m		CB4a	PH16n ☑
49	PC617(2)	200m	70m	35	1	70m	2.0k	2A	500m	5.0m	5.0	4.0u	1.4	20m	200m	1.0m	20m		CB3a	PH116 ☑
50	PC17T1	100m	30m	30	1	50m	2.0k	39	50 Δ	10m	10	3.0u	1.6	50m	400m	2.0m	20m	AD	CB45	PH116a ☑
51	PS2101	250m	30m	40	1	50m	2.0k	3A	50 Δ	5.0m	5.0	10u	1.4	10m	300m	2.0m	10m	BC	None	PH351
52	OC27	150m	50m	20	1	60m	2.0k	2A	600 †			4.0u	1.6	50m	400m	2.0m	16m	AD	CB4	PH11 ☑
53	PC627(2)	200m	70m	35	2	70m	2.0k	2A	500m	5.0m	5.0	4.0u	1.4	20m	200m	1.0m	20m		CB5	PH56b ☑
54	PC17T2	100m	30m	30	2	50m	2.0k	39	50 Δ	10m	10	3.0u	1.6	50m	400m	2.0m	20m	AD	CB44	PH139 ☑
55	OC68	200m		30	2	60m	2.0k	2A	300 †			4.0u	1.6	60m	400m	2.0m	16m	AD	CB42	PH141 ☑
56	PC637	200m	70m	35	3	70m	2.0k	2A	500m	5.0m	5.0	4.0u	1.4	20m	200m	1.0m	20m		CB17	PH117 ☑
57	PC17T4	100m	30m	30	4	50m	2.0k	39	50 Δ	10m	10	3.0u	1.6	50m	400m	2.0m	20m	AD	CB6	PH33 ☑
58	4N38A	250m		80	1	80m	2.5k	5A§				5u	1.5	10m	1.0	4.0m	20m	AD	None ♦	PH16ad ☑
59	OPI2250	250m	50m	20	1	60m	2.5k	5A	20m	10m	5.0	2.0u	1.5	10m	500m	2.0m	50m	AD	CB4	PH58c ☑
60	TLP550	100m	8.0m	15	1	25m	2.5k	3A	70m	16m	4.5	0.7u	1.7	16m	0.5	1.1m	16m	AD	None	None
61	TLP551	100m	8.0m	15	1	25m	2.5k	3A	70m	16m	4.5	0.7u	1.7	16m	0.5	1.1m	16m	AD	CE6	None
62	OPI2251	250m	50m	30	1	60m	2.5k	5A	100m	10m	5.0	2.0u	1.5	10m	400m	250u	10m	AD	CB4	PH58c ☑
63	PS2005B	250m	50m	30	1	150m	2.5k	5A	.10	100m	5.0	5.0u*	2.0	100m	.30	4.0m	100m	AD	CB4	PH16k ☑
64	H11D1	300m♦	100m	7.0	1	60m	2.5k	5A	200m	10m	10	5.0u	1.5	10m	400m	500u	10m	AD	CB4	PH16x
65	OPI2252	250m	50m	30	1	60m	2.5k	5A	200m	10m	5.0	3.0u	1.4	16m	400m	2.0m	16m	AD	CB4	PH58c ☑
66	PS2003B	250m	50m	30	1	40m	2.5k	5A	.20	20m	5.0	5.0u*	1.4	20m	.30	2.0m	20m	AD	CB4	PH16p ☑
67	PS2009B	250m	50m	30	1	40m	2.5k	2A	.20	20m	5.0	5.0u*	1.4	20m	.30	2.0m	20m	AD	CB1c	PH16k ☑
68	TIL115	250m		20	1	100m	2.5k	5F%	200m†	10m	5.0	2.0u	1.5	10m	500m	2.0m	50m	CB	None ♦	PH16 ☑
69	PS2001B	250m	50m	30	1	60m	2.5k	5A	.30	20m	5.0	5.0u*	1.4	20m	.30	2.0m	20m	AD	CB4	PH16k ☑
70	PS2008B	250m	50m	30	1	60m	2.5k	2A	.30	20m	5.0	5.0u*	1.4	20m	.30	2.0m	20m	AD	CB1c	PH16k ☑
71	TIL114	250m		30	1	100m	2.5k	5F%	400m†	10m	400m	5.0u	1.4	16m	400m	2.0m	16m	CB	None ♦	PH16 ☑
72	H11AA3	100m	100m	30	1	60m	2.5k		500m	10m	10	5.0u	1.5	10m	400m	10m	500u	AD	CB12	PH50d
73	OPI2253	250m	50m	30	1	60m	2.5k	5A	500m	10m	5.0	3.0u	1.4	16m	400m	4.0m	16m	AD	CB4	PH58c ☑
74	TIL116	250m		30	1	100m	2.5k	5F%	500m†	10m	10	5.0u	1.5	60m	400m	2.2m	15m	CB	None ♦	PH16 ☑
75	TLP521-1	200m	50m	30	1	50	2.5k	3A	700m	5.0m	5.0	6.0u	1.3	10m				AD	CB1	PH157
76	TLP531	150m	50m	30	1	50	2.5k	3A	700m	5.0m	5.0	6.0u	1.3	10m				AD	CB4	PH159
77	TLP532	150m	50	30	1	50	2.5k	3A	700m	5.0m	5.0	6.0u	1.3	10m				AD	CB4a	PH159
78	TIL117	250m		30	1	100m	2.5k	5F%	900m†	10m	10	5.0u	1.4	16m	400m	500u	10m	CB	None ♦	PH16 ☑
79	4N36	500m	100m	30	1	60m	2.5k	5A	1.0	10m	10	7u	1.5	10m	300m	.5m	10m	CB	CB4 ♦	PH16ad ☑
80	H11AA4	100m	100m	30	1	60m	2.5k		1.0	10m	10	5.0u	1.5	10m	400m	10m	500u	AD	CB12	PH50d
81	H11AG3	150m	50m	30	1	50m	2.5k		1.0	10m	5.0	5.0u	1.5	10m	400m	1.0m	500u	AD	CB4	PH50d
82	OPI2254			30	1		2.5k		10	0.5m	0.5	2u	1.5	10m	.35	1.0m	5.0m	AD	CB4	PH58a
83	PS2041(A)	100m	8.0m	15	1	25m	2.5k	5A	15 Δ	16m		1.5u	2.2	16m				BC	CB55	PH350
84	PS2042(A)	100m	8.0m	15	1	25m	2.5k	5A	15 Δ	16m		1.5u	2.2	16m				BC	CB55	PH350
85	PS2044(A)	100m	8.0m	15	1	25m	2.5k	5A	15 Δ	16m	5.0	1.5u	2.2	16m	300m	2.0m	10m	BC	CB54	PH158
86	OPI2255			30	1		2.5k		20	1.0m	0.5	2u	1.5	10m	.35	1.0m	5.0m	AD	CB4	PH58a
87	GEPS2001	250m	100m	30	1	60m	2.5k	5A	30	20m	5.0	5.0	1.4	20m	0.1 †	2.0m	20m	AD	CB4	PH16z
88	ON3111	200m	50m	35	1	50m	2.5k	2A	50 Δ	5.0m	10	2.0u	1.5	50m	0.2	1.0m	20m	AD	None ♦	PH157a
89	ON3112	200m	50m	35	1	50m	2.5k	2A	50 Δ	5.0m	10	2.0u	1.5	50m	0.2	1.0m	20m	AD	None ♦	PH56g
90	ON3113	200m	50m	35	1	50m	2.5k	2A	50 Δ	5.0m	10	2.0u	1.5	50m	0.2	1.0m	20m	AD	None ♦	PH314
91	TLP573	1.3	1.0	60	1	60m	2.5k	38	80	12m	5.0	4.0u	1.4	30m	1.5	1.0	12m	AD	None	None
92	OC34(1)	200m		30	1	60m	2.5k	2A	300 †			4.0u	1.6	60m	400m	2.0m	16m	AD	CB4	PH11 ☑
93	OC36(1)	150m		30	2	60m	2.5k	2A				4.0u	1.6	60m	400m	2.0m	16m	AD	CB5	PH56h ☑
94	TLP504A	400m	50m	30	2	60m	2.5k	3A	500m	10m	5.0	5.0u	1.3	10m	400m	1.0m	10m	AD	CB5	PH158
95	TLP521-2	150m	50m	30	2	40	2.5k	3A	700m	5.0m	5.0	6.0u	1.3	10m				AD	CB5	PH158
96	CNY74-2	250m	50m	70	2	60m	2.5k	4A	50 Δ	5.0m	5.0	7.0u	1.6	50m	300m	1.0m	10m	AD	CB5	PH56e
97	TLP521-3	150m	50m	30	3	40	2.5k	3A	700m	5.0m	5.0	6.0u	1.3	10m				AD	CB17	PH117
98	CNY74-4	250m	50m	70	4	60m	2.5k	4A	50 Δ	5.0m	5.0	7.0u	1.6	50m	300m	1.0m	10m	AD	CB6	PH33
99	SFH610-1	250m	50m	70	1	60m	2.8k	5A	40 Δ	10m		3.0u	1.6	60m	400m	2.5m	10m	AD	CB1	PH116b ☑
100	SFH611-1	250m	50m	70	1	60m	2.8k	5A	40 Δ	10m		3.0u	1.6	60m	400m	2.5m	10m	AD	CB1i	PH116b
101	SFH600-0	250m	50m	70	1	60m	2.8k	5A	60 †	10m	5.0	3.7u	1.7	60m	400m†	2.5m	10m	CB	CB4	PH16e ☑
102	SFH610-2	250m	50m	70	1	60m	2.8k	5A	63 Δ	10m		4.2u	1.6	60m	400m	2.5m	10m	AD	CB1	PH116b ☑
103	SFH611-2	250m	50m	70	1	60m	2.8k	5A	63 Δ	10m		4.2u	1.6	60m	400m	2.5m	10m	AD	CB1i	PH116b
104	SFH600-1	250m	50m	70	1	60m	2.8k	5A	94 †	10m	5.0	4.5u	1.7	60m	400m	2.5m	10m	CB	CB4	PH16e ☑
105	SFH610-3	250m	50m	70	1	60m	2.8k	5A	100 Δ	10m		4.2u	1.6	60m	400m	2.5m	10m	AD	CB1	PH116b ☑
106	SFH611-3	250m	50m	70	1	60m	2.8k	5A	100 Δ	10m		4.2u	1.6	60m	400m	2.5m	10m	AD	CB1i	PH116b ☑
107	SFH600-2	250m	50m	70	1	60m	2.8k	5A	150 †	10m	5.0	4.5u	1.7	60m	400m	2.5m	10m	CB	CB4	PH16e ☑
108	SFH610-4	250m	50m	70	1	60m	2.8k	5A	160 Δ	10m		6.0u	1.6	60m	400m	2.5m	10m	AD	CB1	PH116b ☑
109	SFH611-4	250m	50m	70	1	60m	2.8k	5A	160 Δ	10m		6.0u	1.6	60m	400m	2.5m	10m	AD	CB1i	PH116b ☑
110	SFH600-3	250m	50m	70	1	60m	2.8k	5A	240 †	10m	5.0	5.8u	1.7	60m	400m	2.5m	10m	CB	CB4	PH16e ☑

SYMBOLS AND CODES EXPLAINED IN INTERPRETER

26. OPTOCOUPLERS: PHOTOTRANSISTOR OUTPUT - NPN-Output (Cont'd)

IN ORDER OF: (1) V(IO) (2) CHANNELS (3)CURR. TRANSFER RATIO & (4) TYPE No.

LINE No.	4 TYPE NUMBER	PD RATED MAX (W)	IC RATED MAX (A)	VCE RATED MAX (V)	2 CHAN-NELS	FWD. CURR. IF (A)	1 MAX ISOL. VOLT VIO (V)	TEMP RNG. CODE - +	COUPLED CHARACTS. 3 CTR=IC/IF(MIN) CURR TRANSF RAT. hF	IF (A)	VCE (V)	RESP. TIME (S)	MAX INPUT DIODE CHAR. FWD.VOLT VF (V)	IF (A)	MAX.O/P TRANS. CHAR. COLL. SAT. VOLT VCE(SAT) (V)	IC (A)	IF (A)	MAT	SCHE-MATIC	DRAWING
1	STOC1420				1		3.0k	48	10m	15m	6.0	2.0u	1.5	15m	300m	100u	20m	AD	None ♦	PH90 Ø
2	STOC1430				1		3.0k	47	10m	15m	6.0	2.0u	1.5	15m	300m	100u	20m	AD	None ♦	PH91 ☑
3	STOC1421				1		3.0k	48	100m	15m	6.0	2.0u	1.5	15m	300m	200u	15m	AD	None ♦	PH90 Ø
4	STOC1431				1		3.0k	47	100m	15m	6.0	2.0u	1.5	15m	300m	200u	15m	AD	None ♦	PH91 ☑
5	STOC1422				1		3.0k	48	250m	15m	6.0	2.0u	1.5	15m	300m	200u	15m	AD	None ♦	PH90 Ø
6	STOC1432				1		3.0k	47	250m	15m	6.0	2.0u	1.5	15m	300m	200u	15m	AD	None ♦	PH91 ☑
7	MCT270	260m	90m		1	3.0	3k	5A	50 Δ	10m	10	6.0u	1.5	60m	.4	2m	10m	BC	CB4	PH16w
8	MCT276	260m	30m	45	1	60m	3.1k	5A	150m	10m	10	2.4u	1.5	20m	400m	2.0m	16m	AD	CB4	PH16v
9	MCT271	260m	30m	45	1	60m	3.1k	5A	450m	10m	10	4.9u	1.5	20m	400m	2.0m	16m	AD	CB4	PH16v
10	MCT275	260m	20m	85	1	60m	3.1k	5A	700m	10m	10	4.5u	1.5	20m	400m	2.0m	16m	AD	CB4	PH16v
11	MCT272	260m	40m	45	1	60m	3.1k	5A	750m	10m	10	6.0u	1.5	20m	400m	2.0m	16m	AD	CB4	PH16v
12	MCT273	260m	40m	70	1	60m	3.1k	5A	1.2	10m	10	7.6u	1.5	20m	400m	2.0m	16m	AD	CB4	PH16v
13	MCT274	260m	30m	70	1	60m	3.1k	5A	2.2	10m	10	9.1u	1.5	20m	400m	2.0m	16m	AD	CB4	PH16v
14	CNY32	250m	100m	30	1	60m	3.5k	5A	200m	10m	10	3.0u	1.7	10m	400m	500u	10m	AD	CB1	PH16z
15	MCT2E	250m		30	1	60m	3.5k	5A	200m	10m	10	5u	1.5	20m	4.0	2.0m	16m	CB	CB4	PH11 ☑
16	TIL153	150m		30	1	100m	3.5k	5F%	300m†	10m	10	5.0u	1.4	10m	400m	1.0m	10m	CB	None ♦	PH16ac ☑
17	TIL154	150m		30	1	100m	3.5k	5F%	500m†	10m	10	5.0u	1.4	10m	400m	1.0m	10m	CB	None ♦	PH16ac ☑
18	TIL155	150m		30	1	100m	3.5k	5F%	900m	10m	10	5.0u	1.4	10m	400m	1.0m	10m	CB	None ♦	PH16ac ☑
19	PO40(A)	200m	100m	30	1	100m	3.5k	5A§	1.5	10m	.5	7.0u	1.6	10m	500m	1.0m	10m	BC	CB25 ♦	PH16ad ☑
20	PO44	200m	100m	30	1	100m	3.5k	5A§	1.5	10m	.5	7.0u	1.6	10m	500m	1.0m	10m	BC	CB25 ♦	PH16ad ☑
21	PO44A(A)	200m	100m	30	1	100m	3.5k	5A§	1.5	10m	.5	7.0u	1.6	10m	500m	1.0m	10m	BC	CB25 ♦	PH16ad ☑
22	4N35	500m	100m	30	1	60m	3.5k	5F%	100 Δ	10m	10	7u	1.5	10m	300m	.5m	10m	CB	CB4 ♦	PH16ad ☑
23	TIL181	250		30	1	100	3.5k	5F	550 †	0	5	10u*	1.4	16m	0.4	5.0m	10m	AD	None ♦	PH16 *
24	CNY17I	250m	100m	70	1	60m	4.0k	5A	400m	10m	5.0	2.0u	1.6	60m	400m	2.5m	10m	AD	None	PH16r ☑
25	PS2021	250m	100m	40	1	80m	4.0k	5A	.50	10m	5.0	3.0u	1.4	10m	300m	2.0m	10m		CB4	PH16ae
26	CQY80	250m	50m	32	1	60m	4.0k	5A%	600m	10m	5.0	1.6u	1.6	50m	300m	1.0m	10m	AD	CB4	PH16d
27	CNY17II	250m	100m	70	1	60m	4.0k	5A	630m	10m	5.0	2.0u	1.6	60m	400m	2.5m	10m	AD	None	PH16r ☑
28	CNY17III	250m	100m	70	1	60m	4.0k	5A	1.0	10m	5.0	2.0u	1.6	60m	400m	2.5m	10m	AD	None	PH16r ☑
29	MCT210	260m		30	1	40m	4.0k	5A	1.5	10m	5.0	25u*	1.5	40m	400m	16m	32m	AD	CB4	PH16j Ø
30	CNY17IV	250m	100m	70	1	60m	4.0k	5A	1.6	10m	5.0	2.0u	1.6	60m	400m	2.5m	10m	AD	None	PH16r ☑
31	GFH600III	150m	150m	70	1	3.0	4.0k	5A	1.6	10m	5.0	5.0u	1.6	60m	300m	2.5m	10m	AD	CB4	PH50d
32	H11AG2	150m	50m	30	1	50m	4.0k		2.0	10m	5.0	5.0u	1.5	10m	400m	1.0m	500u	AD	CB4	PH50d
33	H11AG1	150m	50m	30	1	50m	4.0k		3.0	10m	5.0	5.0u	1.5	10m	400m	1.0m	500u	AD	CB4	PH50d
34	PS2015		80m	40	1	150m	4.0k	3A	20	100m	5.0	3.0u	1.7	100m	300m	4.0m	100m		CB4	PH16ae
35	PS2011	150m	80m	40	1	80m	4.0k	3A	50 Δ	5.0m	5.0	3.0u	1.4	10m	300m	2.0m	10m	BC	CB4	PH16ab
36	PS2018	150m	80m	40	1	80m	4.0k	3A	50 Δ	5.0m	5.0	3.0u	1.4	10m	300m	2.0m	10m	BC	CB4a	PH16ab
37	PS2023	250m	100m	40	1	80m	4.0k	5A	50 Δ	10m	5.0	3.0u	1.5	10m	300u	2.0m	10m	BC	CB56	PH352
38	PS2031	250m	50m	200	1	80m	4.0k	5A	50 Δ	5.0m	5.0	2.0u	1.4	10m	250u	2.0m	10m	BC	CB56	PH352
39	GFH600I	150m	150m	70	1	3.0	4.0k	5A	63	10m	5.0	5.0u	1.6	60m	0.3	2.5m	10m	AD	CB4	PH16z
40	CK2202	200m♦	100m	35	1	70m	4.0k	3A	75	10m	5.0	1.8u	1.5	20m	400m	500u	10m	AD	CB4	PH11 ☑
41	CK2201	200m♦	100m	35	1	70m	4.0k	3A	150	10m	5.0	2.0u	1.5	20m	400m	500u	10m	AD	CB4	PH11 ☑
42	OPI2100			30	1		4.0k		150	10m	5.0	4u	1.5	40m	0.4	16m	32m	AD	CB4	PH58a
43	GFH600II	150m	150m	70	1	3.0	4.0k	5A	160	10m	5.0	5.0u	1.6	60m	0.3	2.5m	10m	AD	CB4	PH16z
44	PS2012	150m	200m	40	1	80m	4.0k	3A	200 Δ	1.0m	2.0	100u	1.4	10m	1.0	2.0m	1.0m	BC	CC1	PH16ab
45	PS2012(1)	150m	200m	40	1	80m	4.0k	3A	200 Δ	1.0m	2.0	100u	1.4	10m	1.0	2.0m	1.0m	BC	CE12	PH16ab
46	CK2200	200m♦	100m	35	1	70m	4.0k	3A	300	10m	5.0	3.0u	1.5	20m	400m	500u	10m	AD	CB4	PH11 ☑
47	CNY53	350m	100m	30	1	100m	4.3k	XA	500m	10m	400m	5.0u	1.5	10m	400m	4.0m	10m	AD	CB4	PH54
48	CNY63	200m	100m	30	1	100m	4.3k	C §	1.0 †	10m	400m	5.0u	1.5	10m	400m	4.0m	10m	BC	CB25 ♦	PH55 ☑
49	MCT26	250m	100m	30	1	60m	4.4k	5C§	60m	10m	10	3.0u	1.5	20m	500m	1.6m	60m	CB	CB4	PH16ad ☑
50	CNY57	200m	100m	30	1	100m	4.4k	5E%	200m	10m	0.4	3.0u	1.5	10m	400m	2.0m	10m	BC	CB4	PH16ad
51	CNY57U	200m	100m	30	1	100m	4.4k	5E%	200m	10m	0.4	3.0u	1.5	10m	400m	2.0m	10m	BC	CB4	PH16ad
52	MCT2	250m	50m	30	1	60m	4.4k	5C§	200m	10m	5.0	5.0u	1.5	20m	.4	2.0m	16m	CB	CB4 ♦	PH16ad ☑
53	CNG35(A)	200m	100m	30	1	100m	4.4k	C §	.40	10m	.40	3.0u	1.7	10m	.4			BC	CB4 ♦	PH16ad ☑
54	CNR36(A)	200m	100m	30	1	100m	4.4k	C §	.40	10m	.40	3.0u	1.7	10m	.4			BC	None ♦	☑
55	CNX35	200m	100m	30	1	100m	4.4k	A §	.40	10m	.40	3.0u	1.5	10m	.4	2.0m	10m	BC	CB4 ♦	PH16ad ☑
56	CNX35U	200m	100m	30	1	100m	4.4k	A §	.40	10m	.40	3.0u	1.5	10m	.4	2.0m	10m	BC	CB4 ♦	PH16ad ☑
57	CNY57A	200m	100m	30	1	100m	4.4k	5E%	400m	10m	0.4	5.0u	1.5	10m	400m	4.0m	10m	BC	CB4 ♦	PH16ad
58	CNY57AU	200m	100m	30	1	100m	4.4k	5E%	400m	10m	0.4	5.0u	1.5	10m	400m	4.0m	10m	BC	CB4	PH16ad
59	CNX39	200m	100m	30	1	100m	4.4k	C §	.60	10m	.40	3.0u	1.5	10m	.19	2.0m	10m	BC	CB4 ♦	PH16ad Ø
60	CNX39U	200m	100m	30	1	100m	4.4k	C §	.60	10m	.40	3.0u	1.5	10m	.19	2.0m	10m	BC	CB4 ♦	PH16ad ☑
61	CNX38	200m	100m	80	1	100m	4.4k	C §	0.7 †	10m	10	5.0u	1.5	10m	0.4	2.0m	16m	BC	CB4 ♦	PH16ad ☑
62	CNX38U	200m	100m	80	1	100m	4.4k	C §	0.7 †	10m	10	5.0u	1.5	10m	0.4	2.0m	16m	BC	CB4 ♦	PH16ad ☑
63	CNG36(A)	200m	100m	30	1	100m	4.4k	C §	.80	10m	.40	3.0u	1.7	10m	.4			BC	CB4 ♦	PH16ad ☑
64	CNX36	200m	100m	30	1	100m	4.4k	C §	.80	10m	.40	3.0u	1.5	10m	.19	2.0m	10m	BC	CB4 ♦	PH16ad ☑
65	CNX36U	200m	100m	30	1	100m	4.4k	C §	.80	10m	.40	3.0u	1.5	10m	.19	2.0m	10m	BC	CB4 ♦	PH16ad ☑
66	CNY17-1	250m	50m	70	1	60m	4.4k	4A§	60 †	10m	5.0	5.0u	1.6	60m	400m	2.5m	10m	CB	CB52 ♦	PH16ad ☑
67	CNY17F2	150m	50m	70	1	60m	4.4k	4F%	63 Δ	10m	5	3u	1.6	60m	400m	2.5m	10m	CB	CB4	PH16h ☑
68	CNY17-2	250m	50m	70	1	60m	4.4k	4A	94 †	10m	5.0	5.0u	1.6	60m	400m	2.5m	10m	CB	CB52 ♦	PH16ad ☑
69	CNY17F3	150m	50m	70	1	60m	4.4k	4F%	100 Δ	10m	5	3u	1.6	60m	400m	2.5m	10m	CB	CB4	PH16h ☑
70	CQY80N	250m	50m	32	1	60m	4.4k	5A%	100 Δ	10m	5.0	3.7u*	1.6	50m	300m	1.0m	10m	BC	CB12	PH114b
71	CQY80NG	250m	50m	32	1	60m	4.4k	5A%	100 Δ	10m	5.0	3.7u*	1.6	50m	300m	1.0m	10m	BC	CB12	PH114b
72	CNY17-3	150m	50m	70	1	60m	4.4k	4A	150 †	10m	5.0	5.0u	1.6	60m	400m	2.5m	10m	CB	CB52 ♦	PH16ad ☑
73	CNY17-4	150m	50m	70	1	60m	4.4k	4A	240 †	10m	5.0	3.0u	1.6	60m	400m	2.5m	10m	CB	CB52	PH16g ☑
74	PC508(2)	70m		45	1	50m	5.0k	28	33m†	30m	5.0	6.0u	1.4	30m				AD	None ♦	PH37 Ø
75	STOC1720	250m		30	1	150m	5.0k	5A	100m	10m		2.0u	1.7	50m	600m	2.0m	20m	AD	CB4	PH16f ☑
76	STOC2000	250m		15	1	150m	5.0k	5A	100m	10m		20u	2.0	50m	600m	2.0m	50m	AD	CB4	PH16f ☑
77	3C63B	330m	100m	30	1	100m	5.0k	5C§	200m	10m	5.0	5.0u	1.4	100m	400m	2.0m	50m	AD	CB1a	PH25 ☑
78	FCD830C	250m	20m	30	1	60m	5.0k	5A	200m	10m	10	1.6u	1.5	60m	400m	2.2m	15m	AD	CB4	PH16g ☑
79	H11A520	400m	100m	30	1	60m	5.0k	5A	200m	10m	10	10u	1.5	10m	400m	2.0m	20m	AD	CB4	PH16z
80	STOC1700	250m		30	1	150m	5.0k	5A	300m	10m		2.0u	1.5	50m	400m	2.0m	20m	AD	CB4	PH16f ☑
81	STOC1710	250m		30	1	150m	5.0k	5A	300m	10m		2.0u	1.5	50m	400m	2.0m	20m	AD	CB4	PH16f ☑
82	STOC1800	250m		15	1	150m	5.0k	5A	300m	10m		2.0u	1.7	50m	600m	2.0m	20m	AD	CB4	PH16f ☑
83	STOC1900	250m		30	1	150m	5.0k	5A	300m	10m		2.0u	1.7	50m	600m	2.0m	20m	AD	CB4	PH16f ☑
84	TIL124	250m		30	1	100m	5.0k	5F%	300m†	10m	10	5.0u	1.4	10m	400m	1.0m	10m	CB	CB4	PH16 ☑
85	3C63C	330m	100m	30	1	100m	5.0k	5C§	400m	10m	5.0	9.0u	1.4	100m	400m	2.0m	50m	AD	CB1a	PH25 ☑
86	H11A550	400m	100m	30	1	60m	5.0k	5A	500m	10m	10	10u	1.5	10m	400m	2.0m	20m	AD	CB4	PH16z
87	PC713	170m	50m	35	1	50m	5.0k	2A	500m	5.0m	5.0	4.0u	1.4	20m	200m	1.0m	20m		CB4	PH16u
88	PC714(2)	170m	50m	35	1	50m	5.0k	2A	500m	5.0m	5.0	4.0u	1.4	20m	200m	1.0m	20m		CB1	PH16u
89	TIL125	250m		30	1	100m	5.0k	5F%	500m†	10m	10	5.0u	1.4	10m	400m	1.0m	10m	CB	CB4	PH16 ☑
90	PS2401A1(A)	250m	100m	40	1	80m	5.0k	5A	.80	10m	5.0	3u	1.4	10m	300m	2m	10m	AD	CB1	PH116
91	PS2401A2(A)	250m	100m	40	1	80m	5.0k	5A	.80	10m	5.0	3u	1.4	10m	300m	2m	10m	AD	CB53	PH56e
92	TIL126	250m		30	1	100m	5.0k	5F%	900m†	10m	10	5.0u	1.4	10m	400m	1.0m	10m	CB	CB4	PH16 ☑
93	CNY51	400m	100m	70	1	60m	5.0k	5A	1.0	10m	10	5.0u	1.6	60m	400m	2.0m	20m	AD	CB4	PH16z
94	H11A5100	400m	100m	30	1	60m	5.0k	5A	1.0	10m	10	10u	1.5	10m	400m	2.0m	20m	AD	CB4	PH16z
95	STOC1500	250m		30	1	150m	5.0k	5A	1.0	10m		8.0u	1.5	50m	400m	2.0m	20m	AD	CB4	PH16f ☑
96	STOC1510	250m		30	1	150m	5.0k	5A	1.0	10m		8.0u	1.5	50m	400m	2.0m	20m	AD	CB4	PH16f ☑
97	STOC1520	250m		30	1	150m	5.0k	5A	1.0	10m		8.0u	1.5	50m	400m	2.0m	20m	AD	CB4	PH16f ☑
98	STOC1600	250m		30	1	150m	5.0k	5A	1.0	10m		8.0u	1.5	50m	400m	2.0m	20m	AD	CB4	PH16f ☑
99	PC510(2)	75m		35	1	50m	5.0k	28	5.0	20m	5.0	3.0u							CB3a	PH116 ☑
100	PC818	150m		35	1	50m	5.0k	2A	10	1.0m	0.4	7.0u							CB3a	PH116 ☑
101	ON3105	100m♦	20m	30	1	50m	5.0k	28	15 Δ	5.0m	10	4.0u	1.5	50m	400m	1.0m	20m	AD	None ♦	PH313
102	P2067	200m	50m	35	1	50m	5.0k	3A	20 Δ	5.0m	5.0	4.0u			200m	1.0m	20m	AD	CB50	PH116c ☑
103	IL250	250m		30	1	100m	5.0k	5A	50 Δ	10m	10	13u	1.5	10m	400m	2.0m	16m	CB	CB12	PH16g ☑
104	ON3151	200m	50m	35	1	50m	5.0k	2A	50 Δ	5.0m	10	2.0u	1.5	50m	200m	1.0m	20m	AD	None ♦	PH157a
105	ON3152	200m	50m	35	1	50m	5.0k	2A	50 Δ	5.0m	10	2.0u	1.5	50m	200m	1.0m	20m	AD	None ♦	PH56g
106	ON3153	200m	50m	35	1	50m	5.0k	2A	50 Δ	5.0m	10	2.0u	1.5	50m	200m	1.0m	20m	AD	None ♦	PH314
107	P1063-02	170m	50m	35	1	50m	5.0k	2A	50 Δ	5.0m	5.0	4.0u			200m	1.0m	20m	AD	CB39	PH16ao ☑
108	P2163	200m	50m	35	1	50m	5.0k	3A	50 Δ	5.0m	5.0	4.0u			200m	1.0m	20m	AD	CB1a	PH116c ☑
109	PC713U	150m	50m	35	1		5.0k	2A	50	5.0m	5.0	4.0u		50m					CB4	PH11
110	PC714U	150m	50m	35	1		5.0k	2A	50	5.0m	5.0	4.0u		50m					CB4	PH11

SYMBOLS AND CODES EXPLAINED IN INTERPRETER

26. OPTOCOUPLERS: PHOTOTRANSISTOR OUTPUT - NPN-Output (Cont'd)

IN ORDER OF: (1) V(IO) (2) CHANNELS (3)CURR. TRANSFER RATIO & (4) TYPE No.

LINE No.	4 TYPE NUMBER	PD RATED MAX (W)	IC RATED MAX (A)	VCE RATED MAX (V)	2 CHAN-NELS	FWD. CURR. IF (A)	1 MAX ISOL. VOLT VIO (V)	TEMP RNG. CODE - +	COUPLED CHARACTS. 3 CTR=IC/IF(MIN) CURR TRANSF RAT. hF	IF (A)	VCE (V)	RESP. TIME (S)	MAX INPUT DIODE CHAR. FWD.VOLT VF (V)	IF (A)	MAX.O/P TRANS. CHAR. COLL. SAT. VOLT VCE(SAT) (V)	IC (A)	IF (A)	MAT	SCHE-MATIC	DRAWING
1	PC723(2)	150m	50m	80	1		5.0k	2A	50	5.0m	5.0	6.0u		50m					CB4	PH11
2	PC723U	150m	50m	80	1		5.0k	2A	50	5.0m	5.0	6.0u		50m					CB4	PH11
3	PC817	150m		35	1	50m	5.0k	2A	50	5.0m	5.0	4.0u							CB3a	PH116 ☑
4	PS2403-1	150m	30m	40	1	50m	5.0k	5A	200 †	1.0m	5.0	60u*	1.3	1.0m	250m	200u	1.0m	BC	CB45	PH157
5	PC827	150m		35	2	50m	5.0k	2A	50	5.0m	5.0	6.0u		50m					CB5	PH56c
6	PC829	150m	50m	35	2		5.0k	2A	50	5.0m	5.0	4.0u		50m					CB5	PH56c
7	PS2403-2	120m	30m	40	2	50m	5.0k	5A	200 †	1.0m	5.0	60u*	1.3	1.0m	250m	200u	1.0m	BC	CB53	PH158
8	PS2401A3(A)	250m	100m	40	3	80m	5.0k	5A	.80	10m	5.0	3u	1.4	10m	300m	2m	10m	AD	CB17	PH117
9	PC837	150m		35	3	50m	5.0k	2A	50	5.0m	5.0	4.0u							CB17	PH117 ☑
10	PS2403-3	120m	30m	40	3	50m	5.0k	5A	200 †	1.0m	5.0	60u*	1.3	1.0m	250m	200u	1.0m	BC	CB17	PH320
11	PS2401A4(A)	250m	100m	40	4	80m	5.0k	5A	.80	10m	5.0	3u	1.4	10m	300m	2m	10m	AD	CB31	PH33
12	PC847	150m		35	4	50m	5.0k	2A	50	5.0m	5.0	4.0u							CB31	None *
13	PS2403-4	120m	30m	40	4	50m	5.0k	5A	200 †	1.0m	5.0	60u*	1.3	1.0m	250m	200u	1.0m	BC	CB31	PH33b
14	CNY52	350m	100m	50	1	100m	5.3k	XA	250m	10m	400m	3.0u	1.5	10m	400m	2.0m	10m	AD	CB4	PH54
15	CNX62(A)	200m	100m	50	1	100m	5.3k	C §	.40	10m	.40	12u	1.5	10m	.40	4.0m	10m	BC	CB1c ♦	PH16am
16	CNX72(A)	100m	100m	30	1	100m	5.3k	C §	.40	10m	.40	26u	1.5	10m	.40	4.0m	10m	BC	CB4	PH16ad
17	CNX82(A)	200m	100m	30	1	100m	5.3k	C §	.40	10m	.40	26u	1.5	10m	.40	4.0m	10m	BC	CB1c	PH16ao
18	CNX83(A)	200m	100m	50	1	100m	5.3k	C §	.40	10m	.40	12u	1.5	10m	.40	4.0m	10m	BC	CB1c	PH16ao
19	GFH601I	150m	150m	70	1	3.0	5.3k	5A	400m	10m	5.0	5.0u	1.6	60m	400m	2.5m	10m	AD	CB4	PH50d
20	CNY62	200m	100m	50	1	100m	5.3k	C §	500m†	10m	400m	3.0u	1.5	10m	400m	2.0m	10m	BC	CB25 ♦	PH55 ☑
21	GFH601II	150m	150m	70	1	3.0	5.3k	5A	630m	10m	5.0	5.0u	1.6	60m	400m	2.5m	10m	AD	CB4	PH50d
22	GFH601III	150m	150m	70	1	3.0	5.3k	5A	1.0	10m	5.0	5.0u	1.6	60m	400m	2.5m	10m	AD	CB4	PH50d
23	CNX37(A)	200m	100m	30	1	100m	5.3k	5F%	1.5	10m	5.0	12u	1.5	10m	.40	2.0m	10m		CB4	PH16am
24	GFH601IV	150m	150m	70	1	3.0	5.3k	5A	1.6	10m	5.0	5.0u	1.6	60m	400m	2.5m	10m	AD	CB4	PH50d
25	CNY17A	260m	90m	70	1	90m	5.3k	5A	40 △	10m	5.0	6.0u	1.5	60m	0.3	2.5m	10m		None ♦	PH16v
26	CNY17F1	150m	50m	70	1	60m	5.3k	4F%	40 △	10m	5	3u	1.6	60m	400m	2.5m	10m	CB	CB4	PH16h ☑
27	SFH601-1	100m	50m	70	1	60m	5.3k	4F%	40 △	10m	5.0	2.0u	1.7	60m	400m	2.5m	10m	CB	CB4	PH11c ☑
28	SFH601G1	100m	50m	70	1	60m	5.3k	4F%	40 △	10m	5.0	2.0u	1.7	60m	400m	2.5m	10m	CB	CB4	PH11 ☑
29	SFH609-1	250m	50m	90	1	60m	5.3k	4F%	40 △	10m	5.0	2.0u	1.7	60m	400m	2.5m	10m	CB	CB4	PH16h ☑
30	SFK610-1	250m	50m	70	1	60m	5.3k	5F%	40 △	10m	5.0	3.0u	1.7	60m	400m	2.5m	10m	CB	CB1	PH116b ☑
31	SFK611-1	250m	50m	70	1	60m	5.3k	5F%	40 △	10m	5.0	3.0u	1.7	60m	400m	2.5m	10m	CB	CB1i	PH116b ☑
32	CNY17B	260m	90m	70	1	90m	5.3k	5A	63 △	10m	5.0	6.0u	1.5	60m	0.3	2.5m	10m		None ♦	PH16v
33	SFH601-2	100m	50m	70	1	60m	5.3k	4F%	63 △	10m	5.0	3.0u	1.7	60m	400m	2.5m	10m	CB	CB4	PH11c ☑
34	SFH601G2	100m	50m	70	1	60m	5.3k	4F%	63 △	10m	5.0	3.0u	1.7	60m	400m	2.5m	10m	CB	CB4	PH11 ☑
35	SFH609-2	250m	50m	90	1	60m	5.3k	4F%	63 △	10m	5.0	3u	1.7	60m	400m	2.5m	10m	CB	CB4	PH16h ☑
36	SFK610-2	250m	50m	70	1	60m	5.3k	5F%	63 △	10m	5.0	3.2u	1.7	60m	400m	2.5m	10m	CB	CB1	PH116b ☑
37	SFK611-2	250m	50m	70	1	60m	5.3k	5F%	63 △	10m	5.0	3.2u	1.7	60m	400m	2.5m	10m	CB	CB1i	PH116b ☑
38	CNY17C	260m	90m	70	1	90m	5.3k	5A	100 △	10m	5.0	6.0u	1.5	60m	0.3	2.5m	10m		None ♦	PH16v
39	SFH601-3	100m	50m	70	1	60m	5.3k	4F%	100 △	10m	5.0	3.0u	1.7	60m	400m	2.5m	10m	CB	CB4	PH11c ☑
40	SFH601G3	100m	50m	70	1	60m	5.3k	4F%	100 △	10m	5.0	3.0u	1.7	60m	400m	2.5m	10m	CB	CB4	PH11 ☑
41	SFH609-3	250m	50m	90	1	60m	5.3k	4F%	100 △	10m	5.0	3.0u	1.7	60m	400m	2.5m	10m	CB	CB4	PH16h ☑
42	SFK610-3	250m	50m	70	1	60m	5.3k	5F%	100 △	10m	5.0	3.6u	1.7	60m	400m	2.5m	10m	CB	CB1	PH116b ☑
43	SFK611-3	250m	50m	70	1	60m	5.3k	5F%	100 △	10m	5.0	3.6u	1.7	60m	400m	2.5m	10m	CB	CB1i	PH116b ☑
44	CNY17D	260m	90m	70	1	90m	5.3k	5A	160 △	10m	5.0	6.0u	1.5	60m	0.3	2.5m	10m		None ♦	PH16v
45	SFH601-4	100m	50m	70	1	60m	5.3k	4F%	160 △	10m	5.0	3.0u	1.7	60m	400m	2.5m	10m	CB	CB4	PH11c ☑
46	SFH601G4	100m	50m	70	1	60m	5.3k	4F%	160 △	10m	5.0	4.6u	1.7	60m	400m	2.5m	10m	CB	CB4	PH11 ☑
47	SFK610-4	250m	50m	70	1	60m	5.3k	5F%	160 △	10m	5.0	4.1u	1.7	60m	400m	2.5m	10m	CB	CB1	PH116b ☑
48	SFK611-4	250m	50m	70	1	60m	5.3k	5F%	160 △	10m	5.0	4.1u	1.7	60m	400m	2.5m	10m	CB	CB1i	PH116b ☑
49	H11AV3	300m		70	1	60m	5.6k	5A	20 △	10m	10	10u	1.5	10m	0.4	2.0m	20m	BC	CB4	PH16z
50	H11AV3A	300m	100m	70	1	60m	5.6k	5A	20 △	10m	10	15	1.5	10m	400m	2.0m	20m	AD	CB4	PH1 ☑
51	H11AV2	300m		70	1	60m	5.6k	5A	50 △	10m	10	10u	1.5	10m	0.4	2.0m	20m	BC	CB4	PH16z
52	H11AV2A	300m	100m	70	1	60m	5.6k	5A	50 △	10m	10	15	1.5	10m	400m	2.0m	20m	AD	CB4	PH1 ☑
53	H11AV1	300m		70	1	60m	5.6k	5A	100 △	10m	10	10u	1.5	10m	0.4	2.0m	20m	BC	CB4	PH16z
54	H11AV1A	300m	100m	70	1	60m	5.6k	5A	100 △	10m	10	15	1.5	10m	400m	2.0m	20m	AD	CB4	PH1 ☑
55	H24A2	150m	100m	30	1	60	6.0k	58	200m	10m	10	5.0u	1.7	60m	400m	500u	10m	AD	None	PH51
56	OPI7002	250m		30	1	60m	6.0k	58	200m	10m	10	3.0u	1.7	10m	400m	500u	10m	AD	None ♦	PH128 ☑
57	CNY21	250m	50m	32	1	50m	6.0k	2A%	250m	10m	5.0	1.6u	1.6	50m	300m	1.0m	10m	AD	CB1b	PH3 ☑
58	H24A1	150m	100m	30	1	60	6.0k	58	1.0	10m	10	5.0u	1.7	60m	400m	500u	10m	AD	None	PH51
59	OPI7010	250m		30	1	60m	6.0k	58	1.0	10m	10	3.0u	1.7	10m	500m	5.0m	10m	AD	None ♦	PH128 ☑
60	IL1B	250m		50	1	100m	6.0k	5A	20 △	10m	10	2.5u	1.5	60m	500m	1.6m	16m	AD	CB4	PH11c ☑
61	ILD74	400m		20	2	100m	6.0k	5A	12 △	16m	5.0	6.0u	1.3	100m	500m	2.0m	16m	CB	CB5 #	PH56i ☑
62	ILD1	400m		30	2	100m	6.0k	5A	20 △	10m	10	6.0u	1.5	60m	500m	1.6m	16m	CB	CB5 #	PH56i ☑
63	ILQ74	500m		20	4	100m	6.0k	5A	12 △	10m	5.0	6.0u	1.3	100m	500m	2.0m	16m	CB	CB6 #	PH33 ☑
64	ILQ1	500m		30	4	100m	6.0k	5A	20 △	10m	10	6.0u	1.5	60m	500m	1.6m	16m	CB	CB6 #	PH33 ☑
65	CLA7	200m	100m	40	1	40m	7.0k	4A	200m	10m	10	5.0u	1.5	10m	500m	1.0m	10m		CB1	PH21a ☑
66	CK2195	250m	200m	30	1	100m	7.0k	67	3.0	40m	5.0	3.0u	1.7	40m	300m	10m	20m	AD	CB4	PH100a
67	CLA7AA	200m	100m	40	1	40m	7.0k	4A	10 △	10m	10	5.0u	1.5	10m	500m	250u	10m	BC	CB1	PH21a ☑
68	CLA60AB	200m	100m	40	1	40m	7.0k	4A	10 △	10m	10	6.0u	1.5	10m	500m	250u	10m		None ♦	PH281 ☑
69	CLA60AA	200m	100m	40	1	40m	7.0k	4A	20 △	10m	10	6.0u	1.5	10m	500m	1.0m	10m		None ♦	PH281 ☑
70	CLA60	200m	100m	40	1	40m	7.0k	4A	40 △	10m	10	6.0u	1.5	10m	500m	1.0m	10m		None ♦	PH281 ☑
71	MOC601A	250m	1.0m	30	1	60m	7.5k	5A§	.1	10m	10	8u	1.5	10m	500m	2m	50m	CB	CB4	PH129a
72	MOC602A	250m	2.0m	30	1	60m	7.5k	5A§	.2	10m	10	8u	1.5	10m	500m	2m	50m	CB	CB4	PH129a
73	MOC603A	250m	5.0m	30	1	60m	7.5k	5A§	.5	10m	10	8u	1.5	10m	500m	2m	50m	CB	CB4	PH129a
74	MOC604A	250m	10m	30	1	60m	7.5k	5A§	1	10m	10	8u	1.5	10m	500m	2m	50m	CB	CB4	PH129a
75	MOC8206	300m	100m	400	1	60m	7.5k	5A	5	10m	10	5.0u	1.5	10m	400m	500u	10m	CB	CB4	PH129a
76	MOC8205	300m	100m	400	1	60m	7.5k	5A	10	10m	10	5.0u	1.5	10m	400m	500u	10m	CB	CB4	PH129a
77	H11AA1	250m	60m	30	1	100m	7.5k	5F%	20 △	10m	10	5.0u	1.5	10m	400m	500u	10m	CB	CB12	PH16x ☑
78	IL251	250m		30	1	100m	7.5k	5F%	20 △	10m	10		1.5	10m	400m	2.0m	16m	CB	CB12	PH11b ☑
79	MOC8204	300m	100m	400	1	60m	7.5k	5A	20	10m	10	5.0u	1.5	10m	400m	500u	10m	CB	CB4	PH129a
80	MOC8100	300m	100m	30	1	60m	7.5k	5A	30	1.0m	5.0	20u	1.4	1.0m	500m	100u	1.0m		CB4	PH1 ☑
81	IL1	250m		30	1	100m	7.5k	5F%	35 △	10m	10	3.0u	1.5	60m	500m	1.6m	16m	CB	None	PH31 ☑
82	IL74	200m		20	1	60m	7.5k	5F%	35 △	16m	5.0	3.0u	1.5	20m	500m	2.0m	16m	CB	CB4	PH31 ☑
83	MOC8111	1.3m	100m	30	1	60m	7.5k	5A	50 △	10m	10	20u	1.5	10m	.4	500u	10m	CB	CB4	PH129a
84	IL5	250m		30	1	100m	7.5k	5F%	70 △	10m	10	3.0u	1.5	60m	500m	1.6m	16m	CB	CB4	PH31 ☑
85	IL2	250m		70	1	100m	7.5k	5F%	100 △	10m	10	3.0u	1.5	60m	500m	1.6m	16m	CB	CB4	PH31 ☑
86	IL201	250m		30	1	100m	7.5k	5F%	100 △	10m	10		1.5	20m	400m	2.0m	10m	CB	CB4	PT99 ☑
87	IL252	250m		30	1	100m	7.5k	5F%	100 △	10m	10		1.5	10m	400m	2.0m	16m	CB	CB12	PH11b ☑
88	MOC8112	1.3m	100m	30	1	60m	7.5k	5A	100 △	10m	10	20u	1.5	10m	.4	500u	10m	CB	CB4	PH129a
89	MOC8113	1.3m	100m	30	1	60m	7.5k	5A	150 △	10m	10	20u	1.5	10m	.4	500u	10m	CB	CB4	PH129a
90	IL202	250m		30	1	100m	7.5k	5F%	200 △	10m	10		1.5	20m	400m	2.0m	10m	CB	CB4	PT99 ☑
91	MOC1005	250m	100m	30	1	80m	7.5k	5A§	250 †	500u	5.0	.8u	1.5	10m	500m	2.0m	50m	AD	None	PH1 ☑
92	MOC1006	250m	100m	30	1	80m	7.5k	5A§	250 †	500u	5.0	2.0u	1.5	10m	500m	2.0m	50m	AD	None	PH1 ☑
93	IL203	250m		30	1	100m	7.5k	5F%	300 △	10m	10		1.5	20m	400m	2.0m	10m	CB	CB4	PT99 ☑
94	ILD610-1	250m	50m	70	2	60m	7.5k	5F%	40 △	10m	5.0	2.0u	1.3	60m	250m†	2.5m	10m	CB	CB5 #	PH56i ☑
95	ILCT6	400m	30m		2	60m	7.5k	5F%	50 △	10m	10	3.0u	1.5	20m	400m	2.0m	16m	CB	CB5 #	PH56f ☑
96	ILD5	400m		70	2	100m	7.5k	5F%	50 △	10m	10	3.0u	1.5	60m	500m	1.6m	16m	CB	CB5 #	PH56i ☑
97	ILQ5	500m		70	2	100m	7.5k	5F%	50 △	10m	10	3.0u	1.5	60m	500m	1.6m	16m	CB	CB6 #	PH33 ☑
98	ILD610-2	250m	50m	70	2	60m	7.5k	5F%	63 △	10m	5.0	2.0u	1.3	60m	250m†	2.5m	10m	CB	CB5 #	PH56i ☑
99	ILD2	400m		70	2	100m	7.5k	5F%	100 △	10m	10	3.0u	1.5	60m	500m	1.6m	16m	CB	CB5 #	PH139a ☑
100	ILD610-3	250m	50m	70	2	60m	7.5k	5F%	100 △	10m	5.0	2.0u	1.3	60m	250m†	2.5m	10m	CB	CB5 #	PH56i ☑
101	ILD610-4	250m	50m	70	2	60m	7.5k	5F%	160 △	10m	5.0	2.0u	1.3	60m	250m†	2.5m	10m	CB	CB5 #	PH56i ☑
102	ILQ2	500m		70	4	100m	7.5k	5F%	100 △	10m	10	3.0u	1.5	60m	500m	1.6m	16m	CB	CB6 #	PH33a ☑
103	IL8(A)	400m	100m	30	1	60m	8.0k	5F%	20 △	10m	10	14u	1.5	10m	400m	2.0m	20m	CB	CB48	PH329a ☑
104	IL9(A)	400m	100m	30	1	60m	8.0k	5F%	20 △	10m	10	14u	1.5	10m	400m	2.0m	20m	CB	CB47	PH329 ☑
105	IL10	400m	100m	30	1	60m	8.0k	5F%	50 △	10m	10	14u	1.5	10m	400m	2.0m	20m	CB	CB48	PH329a ☑
106	IL11(2)	400m	100m	30	1	60m	8.0k	5F%	50 △	10m	10	14u	1.5	10m	400m	2.0m	20m	CB	CB47	PH329 ☑
107	CNY64	250m	50m	32	1	70m	8.2k	5A%	3.0	10m	5.0	3.7u*	1.6	50m	300	1.0m	10m	BC	CB1	PH291a
108	CNY64A	250m	50m	32	1	70m	8.2k	5A%	3.0	10m	5.0	3.7u*	1.6	50m	300	1.0m	10m	BC	CB1	PH291a
109	CNY64B	250m	50m	32	1	70m	8.2k	5A%	3.0	10m	5.0	3.7u*	1.6	50m	300	1.0m	10m	BC	CB1	PH291a
110	CNY64C	250m	50m	32	1	70m	8.2k	5A%	3.0	10m	5.0	3.7u*	1.6	50m	300	1.0m	10m	BC	CB1	PH291a

SYMBOLS AND CODES EXPLAINED IN INTERPRETER

26. OPTOCOUPLERS: PHOTOTRANSISTOR OUTPUT- NPN-Output (Cont'd)

IN ORDER OF: (1) V(IO) (2) CHANNELS (3)CURR. TRANSFER RATIO & (4) TYPE No.

LINE No.	4 TYPE NUMBER	PD RATED MAX (W)	IC RATED MAX (A)	VCE RATED MAX (V)	2 CHAN-NELS	FWD. CURR. IF (A)	1 MAX ISOL. VOLT VIO (V)	TEMP RNG. CODE - +	COUPLED CHARACTS. 3 CTR=IC/IF(MIN) CURR TRANSF RAT. hF	IF (A)	VCE (V)	RESP. TIME (S)	MAX INPUT DIODE CHAR. FWD.VOLT VF (V)	IF (A)	MAX.O/P TRANS. CHAR. COLL. SAT. VOLT VCE(SAT) (V)	IC (A)	IF (A)	MAT	SCHE-MATIC	DRAWING
1	SL5502R		100m	32	1	50m	10k	5F%				25u	1.6	50m	.3	1m	10m		CB25	PH308
2	OPI110	100m		30	1	40m	10k	48	125m	16m	5.0	2.0u	1.5	20m	400m	1.8m	16m	AD	CB3a	PH81 Ø
3	CNX21T		25m	30	1	50m	10k	XA§	0.2			3.0u	1.2	10m	10	50n		AD	None	PH277
4	OPI1264A	100m		32	1	40m	10k	48	250m	10m	5.0	4.0u	1.5	20m	400m	1.6m	10m	AD	CB3a	PH135 Ø
5	OPI1264B	100m		32	1	40m	10k	48	500m	10m	5.0		1.5	20m	400m	1.6m	10m	AD	CB3a	PH135 Ø
6	OPI1264C	100m		32	1	40m	10k	48	1.0	10m	5.0		1.5	20m	400m	1.6m	10m	AD	CB3a	PH135 Ø
7	K8900			30	1		10k		13	16m	5.0	3.0u	1.5	20m	0.4	1.8m	16m	AD	FA23b	PH135
8	CNX21	100m	25m	30	1	50m	10k	A §	20	10m	0.4	3.0u	1.3	10m	.15	2m	10m	AD	CB25 ♦	PH308
9	CNY21N	250m	50m	32	1	50m	10k	5A%	25 Δ	10m	5.0	3.4u	1.6	50m	300m	1.0m	10m	BC	CB1j	PH337
10	CNY21EXI(A)	250m	10m	32	1	50m	10k	5A%	50 Δ	10m	5.0	3.4u	1.6	50m	300m	1.0m	10m	AD	CB1j	PH337
11	CNY65	250m	50m	32	1	70m	12k	5A%	3.0	10m	5.0	3.7u*	1.6	50m	300m	1.0m	10m	BC	CB1	PH291a
12	CNY65A	250m	50m	32	1	70m	12k	5A%	3.0	10m	5.0	3.7u*	1.6	50m	300m	1.0m	10m	BC	CB1	PH291a
13	CNY65B	250m	50m	32	1	70m	12k	5A%	3.0	10m	5.0	3.7u*	1.6	50m	300m	1.0m	10m	BC	CB1	PH291a
14	CNY65C	250m	50m	32	1	70m	12k	5A%	3.0	10m	5.0	3.7u*	1.6	50m	300m	1.0m	10m	BC	CB1	PH291a
15	OPI120	350m	50m	25	1	150m	15k	5A%	200m	10m	5.0	2.0u	1.5	30m	500m	1.0m	30m	AD	None	PH86 Ø
16	CNY66	250m	50m	32	1	70m	15k	5A%	3.0	10m	5.0	3.7u*	1.6	50m	300m	1.0m	10m	BC	CB1	PH291a
17	CNY66A	250m	50m	32	1	70m	15k	5A%	3.0	10m	5.0	3.7u*	1.6	50m	300m	1.0m	10m	BC	CB1	PH291a
18	CNY66B	250m	50m	32	1	70m	15k	5A%	3.0	10m	5.0	3.7u*	1.6	50m	300m	1.0m	10m	BC	CB1	PH291a
19	CNY66C	250m	50m	32	1	70m	15k	5A%	3.0	10m	5.0	3.7u*	1.6	50m	300m	1.0m	10m	BC	CB1	PH291a
20	K8920			25	1		15k		20	10m	5.0	3.0u	1.5	90m	0.5	1.0m	30m	AD	FA44	PH86
21	MII66005-001			35	1		16k	XC	15 Δ	10m	5.0	15u	1.3	10m	500m	1.0m	50m	AD	CB14b	PH278a
22	MII66004-001			35	1		40k	XC	5.0 Δ	10m	5.0	10u	1.3	10m	500m	1.0m	50m	AD	CB14b	PH278
23	OPI150	200m		25	1	60m	50k	48	100m	10m	5.0	2.0u	1.6	50m	500m	1.0m	16m	AD	None	PH82 Ø

For more than 15,000 linear ICs, see D.A.T.A.'s 38th LINEAR INTEGRATED CIRCUITS.

27. OPTOCOUPLERS: PHOTODARLINGTON OUTPUT - NPN-Output

IN ORDER OF: (1) V(IO) (2) CHANNELS (3) CURR. TRANSFER RATIO & (4) TYPE No.

LINE No.	4 TYPE NUMBER	PD RATED MAX (W)	IC RATED MAX (A)	VCE RATED MAX (V)	2 CHAN-NELS	INPUT IF RATED MAX (A)	MAX ISOL. VOLT VIO (V)	TEMP RNG. CODE - +	COUPLED CHARACTS. 3 CTR=IC/IF (MIN) CURR TRANSF RATIO hF	IF (A)	VCE (V)	RESP. TIME (S)	MAX. INPUT DIODE CHAR. FWD. VOLT VF (V)	IF (A)	MAX O/P DARL CHARACTS. DARK CURR. ID (A)	VCE (V)	MAT.	SCHE-MATIC	DRAWING
	OPTOCOUPLER, NPN-OUTPUT																		
4	ON1215	70m	30m	20	1	25m		3A%				100n	2.8	20m	.60u	10	AD	CC3	PH113
5	P4009	100m	50m	30	1	50m		28	15	10m	2.0	200u#	1.4	20m			AD	CC3	None
6	SPX2003-1	85m		10	1	30m	500	67	25 Δ	2.0m	5.0	50u#	2.0	30m	100n	10	AD	CC3	PH38 ☑
7	SPX2003-2	85m		15	1	30m	500	67	135 Δ	2.0m	5.0	50u#	1.5	30m		10	AD	CC3	PH38 ☑
8	H11B255	300m	100m	55	1	60m	660	5A	1.0	10m	5.0	125u	1.5	20m	100n	10	AD	CC1 ♦	PH16ad ☑
9	H11BX522	250m	100m	25	1	60m	1.0k	5A	2.0	500u	6.0	3.0u	1.1	500u	10u	12	AD	CC1	PH16z
10	OPI130	300m	50m	25	1	40m	1.0k	5C%	2.0	10m	2.0	50u#	1.5	10m	100n	10	AD	CC4a	PH13 Ø
11	4N31	250m		30	1	80m	1.5k	5A§	500m	10m	10 *	5.0u	1.5	10m	100n	10	AD	CC1	PH1 ☑
12	4N30	250m		30	1	80m	1.5k	5A§	1.0	10m	10 *	5.0u	1.5	10m	100n	10	AD	CC1	PH1 ☑
13	H11B3	150m♦	100m	25	1	60m	1.5k	5A	1.0	1.0m	5.0	125u#	1.5	50m	100n	10	AD	CC1 ♦	PH16ad ☑
14	MCA230	300m♦		30	1	60m	1.5k	5A	1.0	10m	5.0	35u	1.5	60m	100n	10	AD	CC1 ♦	PH16ad ☑
15	MCA255	300m♦		55	1	60m	1.5k	5A	1.0	10m	5.0	35u	1.5	60m	100n	10	AD	CC1 ♦	PH16ad ☑
16	H11B2	150m♦	100m	25	1	60m	1.5k	5A	2.0	1.0m	5.0	100u	1.5	10m	100n	10	AD	CC1 ♦	PH16ad ☑
17	OPI3150	250m	150m	30	1	60m	1.5k	5A	3.0	10m	2.0	3.0u#	1.5	10m	100n	10	AD	CC1	PH58c ☑
18	OPI3151	250m	150m	30	1	60m	1.5k	5A	3.0	10m	1.0	3.0u#	1.5	10m	100n	10	AD	CC1	PH58c ☑
19	OPI3152	250m	150m	55	1	60m	1.5k	5A	3.0	10m	1.0	3.0u#	1.5	10m	100n	10	AD	CC1	PH58c ☑
20	PC525(2)	350m	100m	200	1	70m	1.5k	2A	3	5.0m	2.0	25u#	1.4	20m	10u	100		CC1	PH16r
21	MCA231	275m♦	50m	30	1	60m	1.5k	5A	5.0	10m		80u#	1.5	10m	100n	10	AD	CC1 ♦	PH16ad ☑
22	OPI3153	250m	150m	30	1	60m	1.5k	5A	5.0	1.0m	5.0	3.0u#	1.5	10m	100n	10	AD	CC1	PH58c ☑
23	STOC1300				1		1.5k	47	5.0	3.0m	6.0	50u#	1.7	15m	100n	10	AD	None	PH13 Ø
24	CNY48	250m	100m	30	1	60m	1.5k	5A	6.0	10m	1.0	50u#	1.5	10m	100n	10	AD	CC1	PH16 Ø
25	TIL113	250m		30	1	100m	1.5k	5F%	10 †	10m	1.0	300u#	1.5	10m	100n		CB	CC1	PH16 ☑
26	TIL119	250m		30	1	100m	1.5k	5F%	16 †	10m	2.0	300u#	1.5	10m	100n		CB	None ♦	PH16 ☑
27	TIL119A	250m		30	1	100m	1.5k	5F%	16 †	10m	2.0	300u#	1.5	10m	100n		CB	CC1	PH31c ☑
28	PC515(2)	225m		35	1	50m	1.5k	2A	30	5.0m	2.0	650u#			1.0u	10		CC3b	PH16m ☑
29	IL221			30	1		1.5k		100 Δ	1.0m	5.0						XX	None ♦	PH353 ☑
30	IL222			30	1		1.5k		200 Δ	1.0m	5.0						XX	None ♦	PH353 ☑
31	IL223			30	1		1.5k		500 Δ	1.0m	5.0						XX	None ♦	PH353 ☑
32	PS2022	250m	100m	40	1	80m	2.0k	5A	2.0	10m	5.0	80 #	1.4	10m	100m	10	AD	CC1	PH16ae
33	PS2004B	200m	200m	30	1	50m	2.0k	5A	13	5.0m	2.0	100u#	1.4	20m	400n	10	AD	CC1	PH16k ☑
34	H11G3	150m♦	100m	55	1	60m	2.1k	5A	200	1.0m	5.0	5.0u	1.5	10m	100n	30	BC	CC9	PH16z
35	4N29	250m		30	1	80m	2.5k	5A§	1.0	10m	10 *	5.0u	1.5	10m	100n	10	AD	CC1	PH1 ☑
36	4N29A	250m		30	1	80m	2.5k	5A§	1.0	10m	10	5.0u	1.5	10m	100n	10	AD	CC1	MO001AM☑
37	OPI3250	250m	150m	30	1	60m	2.5k	5A	3.0	10m	2.0	3.0u#	1.5	10m	100n	10	AD	CC1	PH58c ☑
38	OPI3251	250m	150m	30	1	60m	2.5k	5A	3.0	10m	1.0	3.0u#	1.5	10m	100n	10	AD	CC1	PH58c ☑
39	OPI3252	250m	150m	55	1	60m	2.5k	5A	3.0	10m	1.0	3.0u#	1.5	10m	100n	10	AD	CC1	PH58c ☑
40	4N32A	250m		30	1	80m	2.5k	5A§	5.0	10m	10	5.0u	1.5	10m	100n	10	AD	CC1	MO001AM☑
41	H11B1	150m♦	100m	25	1	60m	2.5k	5A	5.0	1.0m	5.0	125u	1.5	10m	100n	10	AD	CC1 ♦	PH16ad ☑
42	OPI3253	250m	150m	30	1	60m	2.5k	5A	5.0	1.0m	5.0	3.0u#	1.5	10m	100n	10	AD	CC1	PH58c ☑
43	TLP570	200m	50m	30	1	50m	2.5k		10	1.0m	1.2		1.3	10m	100m	10		CE12	PH158
44	PS2002B	100m	50m	40	1	50m	2.5k	5A	100	5.0m	2.0	120u*	1.9	5.0m	400n	10	AD	CC3b	PH16k ☑
45	TLP571	70m	100m	30	1	70m	2.5k	5A	500 Δ	1.m	1.	100u	1.3	10m	100n	24.		CC36	PH159
46	TLP572	200m	150m	35	1	70m	2.5k	3A	500 Δ	1.m	1.	100u	1.3	10m	100n	10.		CC36	PH159
47	MCA11G1	260m			1	60m	2.5k	5A	1kΔ	10m	1.0	5.0u	1.5	60m		100	BCAD	CC1	PH16w
48	MCA11G2	260m			1	60m	2.5k	5A	1kΔ	10m	1.0	5.0u	1.5	60m		100	BCAD	CC1	PH16w
49	STOC1400				1		3.0k	48	300m	2.0m	6.0	25u#	1.5	15m	1.0u	10	AD	None	PH90 Ø
50	STOC1401				1		3.0k	48	900m	2.0m	6.0	30u#	1.5	15m	250n	10	AD	None	PH90 Ø
51	STOC1402				1		3.0k	48	2.7	2.0m	6.0	60u#	1.5	15m	250n	10	AD	None	PH90 Ø
52	MCC671	100m♦	60m		1	20m	3.0k	07	3.0	1.6m	4.5 *	1.0u	1.7	1.6m			BC	CC8	PH56 *
53	MCC670	100m♦	60m		1	20m	3.0k	07	4.0	500u	4.5 *	10u	1.7	1.6m			BC	CC8	PH56 *
54	CNY31	250m	100m	30	1	60m	3.5k	58	4.0	5.0m	5.0	125u	1.7	10m	100n	10	AD	CC3	PH51 ☑
55	TIL156	150m		30	1	100m	3.5k	5F%	10 †	10m	1.0	300u#	1.5	10m	100n	10	CB	None ♦	PH16ac ☑
56	TIL157	150m		30	1	100m	3.5k	5F%	16 †	10m	2.0	300u#	1.5	10m	100n	10	CB	None ♦	PH16ac ☑
57	TIL157A	150m		30	1	100m	3.5k	5F%	16 †	10m	2.0	300u#	1.5	10m	100n		CB	CC1	PH31c ☑
58	H11G1	150m♦	150m	100	1	60m	3.5k	5A	500	1.0m	5.0	5.0u	1.5	10m	100n	80	BC	CC9	PH16z
59	H11G2	150m♦	150m	80	1	60m	3.5k	5A	500	1.0m	5.0	5.0u	1.5	10m	100n	60	BC	CC9	PH16z
60	FCD890	400m	30m	30	2	60m	4.0k	5A	200	1.0m	1.0		1.5	20m			AD	CB37	PH56c
61	CNX48	200m	100m	30	1	100m	4.4k	C §	5	1.0m	1.0	30u	1.3	10m	100n	10	BC	CB4 ♦	PH16ad
62	CNX48U	200m	100m	30	1	100m	4.4k	C §	5	1.0m	1.0	30u	1.3	10m	100n	10	BC	CB4	PH16ad
63	CK2190P	300m	200m	25	1	100m	5.0k	67	5.0	10m	5.0	300u	1.5	20m	100n	5.0	AD	None	PH101
64	PC715(2)	170m	80m	35	1	50m	5.0k	2A	6	1.0m	2.0	60u#	1.4	10m	1.0u	10		CC3b	PH16u
65	PC716(2)	350m	200m	35	1	50m	5.0k	2A	10	1.0m	2.0	130u#	1.4	10m	10u	10		CC3b	PH16u
66	TIL127	250m		30	1	100m	5.0k	5F%	10 †	10m	1.0	300u#	1.5	10m	100n	10	CB	CC1	PH16 ☑
67	TIL128	250m		30	1	100m	5.0k	5F%	16 †	10m	2.0	300u#	1.5	10m	100n	10	CB	CC1	PH16 ☑
68	TIL128A	250m		30	1	100m	5.0k	5F%	16 †	10m	2.0	300u#	1.5	10m	100n		CB	CC1	PH31c ☑
69	ON3205	100m♦	30m	20	1	50m	5k	28	400 Δ	1.0m	5.0	100u#	1.5	50m	500n	10	AD	None ♦	PH313
70	PC715U	150m	50m	35	1		5.0k	2A	600	1.0m	2.0	60u			10u	10		CE12	PH11
71	PC716U	300m	50m	35	1		5.0k	2A	1.0k	1.0m	2.0	130u			10u	10		CE12	PH11
72	H11G45	100m	100m	55	1	60m	5.1k	5A	250	1.0m	1.0	80u	1.7	10m	100u	18		CC9	PH1 ☑
73	H11G46	100m	100m	55	1	60m	5.1k	5A	500	1.0m	1.0	80u	1.7	10m	100u	18		CC9	PH1 ☑
74	H24B1	150m	100m	30	1	60	6.0k	58	.10	5.0m	1.5	70u	1.7	60m	100n	10	AD	CC3	PH51
75	H24B2	150m	100m	30	1	60	6.0k	58	.40	5.0m	1.5	70u	1.7	60m	100n	10	AD	CC3	PH51
76	OPI7320	250m		30	1	60m	6.0k	58	2.0	5.0m	5.0		1.5	10m	100n	10		None ♦	PH128 ☑
77	CLA7D	200m	100m	40	1	40m	6.0k	4A	4.0	10m	10	150u#	1.5	10m	100n	10		CC3	PH21a Ø
78	OPI7340	250m		30	1	60m	6.0k	58	4.0	5.0m	5.0		1.5	10m	100n	10		None ♦	PH128 ☑
79	ILCA2-30	250m	125m	30	1	60m	6.0k	5A	100 Δ	10m	5.0	10u#	1.5	20m	100n	10	BC	CC1	PH16ap ☑
80	ILCA2-55	250m	125m	55	1	60m	6.0k	5A	100 Δ	10m	5.0	10u#	1.5	20m	100n	10	BC	CC1	PH16ap ☑
81	4N32	250m	125m	30	1	80m	6.0k	5A	500 Δ	10m	10	5.0u	1.5	50m	100n	10	CB	CC1	PH16ap ☑
82	4N33	250m	125m	30	1	80m	6.0k	5A§	500 Δ	10m	10 *	5.0u	1.5	10m	100n	10	CB	CC1	PH1 ☑
83	MOC119	250m	45m	30	1	100m	7.0k	5A§	3.0	10m	2.0	50u#	1.5	10m	100n	10	AD	CE12	PH129
84	MOC8030	250m	150m	80	1	80m	7.0k	5A§	3.0	10m	1.5	13u#	2.0	10m	1.0m	60	AD	CE12	PH129
85	MOC8050	250m	150m	80	1	80m	7.0k	5A§	5.0	10m	1.5	13u#	2.0	10m	1.0m	60	AD	CE12	PH129
86	CLA7DA	200m	100m	40	1	40m	7.0k	4A	200 Δ	10m	10	150u#	1.5	10m	100n	10		CC3	PH21a
87	CLA65AA	200m	100m	40	1	40m	7.0k	4A	200 Δ	10m	5.0	150u#	1.5	10m	100n	10		None ♦	PH281 Ø
88	CLA65	200m	100m	40	1	40m	7.0k	4A	400 Δ	10m	10	150u#	1.5	10m	100n	10		None ♦	PH281 Ø
89	MOC8080	250m	150m	55	1	50m	7.5k	A %				3.5u	1.5	10m	100n		AD/BC	CC1	PH16z
90	MOC622A	250m	10m	30	1	60m	7.5k	5A§	1	10m	10	15 #	1.5	100u			CB	CC7a	PH129a
91	MOC626A	250m	10m	30	1	60m	7.5k	5A§	1	10m	10	15 #	1.5	100u			CB	CC7a	PH129a
92	MOC8021	250m	150m	50	1	50m	7.5k	5A	1.0	10m	5.0	13u	2.0	10m	100n	10	BC	CE12	PH129a
93	MOC623A	250m	30m	30	1	60m	7.5k	5A§	3	10m	10	15 #	1.5	100u			CB	CC7a	PH129a
94	MOC627A	250m	30m	30	1	60m	7.5k	5A§	3	10m	10	15 #	1.5	100u			CB	CC7a	PH129a
95	MOC624A	250m	50m	30	1	60m	7.5k	5A§	5	10m	10	15 #	1.5	100u			CB	CC7a	PH129a
96	MOC628A	250m	50m	30	1	60m	7.5k	5A§	5	10m	10	15 #	1.5	100u			CB	CC7a	PH129a
97	MOC8020	250m	150m	50	1	50m	7.5k	5A	5.0	10m	5.0	13u	2.0	10m	100n	10	BC	CE12	PH129a
98	MOC625A	250m	100m	30	1	60m	7.5k	5A§	10	10m	10	15 #	1.5	100u			CB	CC7a	PH129a
99	IL55	300m	125m	55	1	60m	7.5k	5F%	100 Δ	10m	5.0	10u#	1.5	20m	1.0n		CB	CC1	PH16ap ☑
100	IL30	300m	125m	30	1	60m	7.5k	5F%	400 Δ	10m	5.0	10u#	1.5	20m	1.0n		CB	CC1	PH16ap ☑
101	MOC629A	250m	100m	30	1	60m	7.5k	5A§	10k†	10m	10	15 #	1.5	100u			CB	CC7a	PH129a
102	ILD30(A)	400m	125m	30	2	50m	7.5k	5C%	100 Δ	10m	5.0	10u#	1.5	20m	1.0n		CB	CC15 #	PH139a ☑
103	ILD55(A)	400m	125m	55	2	50m	7.5k	5C%	100 Δ	10m	5.0	10u#	1.5	20m	1.0n		CB	CC15 #	PH139a ☑
104	ILD32(A)	400m	125m	30	2	80m	7.5k	5F%	500 Δ	10m	10	5.0u	1.5	10m			CB	CC15 #	PH139a ☑
105	ILQ30(A)	500m	125m	30	4	50m	7.5k	5C%	100 Δ	10m	5.0	10u#	1.5	20m	1.0n		CB	CC16 #	PH33a ☑
106	ILQ55(A)	500m	125m	55	4	50m	7.5k	5C%	100 Δ	10m	5.0	10u#	1.5	20m	1.0n		CB	CC16 #	PH33a ☑
107	ILQ32(A)	500m	125m	30	4	80m	7.5k	5F%	500 Δ	10m	10	5.0u	1.5	10m			CB	CC16 #	PH33a ☑
108	OPI113	100m		25	1	40m	10k	48	500m	16m	2.0	3.2u#	1.5	10m	100n	10	AD	None	PH81 Ø
109	OPI123	350m		25	1	150m	15k	5A%	500m	10m	2.0	25u#	1.5	10m	100n	10	AD	None	PH86 ☑
110	MII66005-002			35	1		16k	XC	300 Δ	10m	5.0	25u	1.3	20m	300m	10	AD	CC4b	PH278a

SYMBOLS AND CODES EXPLAINED IN INTERPRETER

27. OPTOCOUPLERS: PHOTODARLINGTON OUTPUT - NPN-Output (Cont'd)

IN ORDER OF: (1) V(IO) (2) CHANNELS (3) CURR. TRANSFER RATIO & (4) TYPE No.

LINE No.	4 TYPE NUMBER	PD RATED MAX (W)	IC RATED MAX (A)	VCE RATED MAX (V)	2 CHAN-NELS	INPUT IF RATED MAX (A)	MAX ISOL. VOLT VIO (V)	TEMP RNG. CODE - +	COUPLED CHARACTS. 3 CTR=IC/IF (MIN) CURR TRANSF RATIO hF	IF (A)	VCE (V)	RESP. TIME (S)	MAX. INPUT DIODE CHAR. FWD. VOLT VF (V)	IF (A)	MAX O/P DARL CHARACTS. DARK CURR. ID (A)	VCE (V)	MAT.	SCHE-MATIC	DRAWING
1	MII66004-002			35	1		40k	XC	100 Δ	10m	5.0	20u	1.3	20m	300m	10	AD	CC4b	PH278
2	OPI153	200m		25	1	150	50k	48	250m	20m	5.0	25u#	1.5	10m	100n	10	AD	None	PH82 Ø

Our 1987 TRANSISTOR REPLACEMENT & ALTERNATE SOURCE GUIDE cross-references devices from over 230 vendors.

SYMBOLS AND CODES EXPLAINED IN INTERPRETER

28. OPTOCOUPLERS: PHOTOTHYRISTOR OUTPUT

IN ORDER OF: (1) TYPE (2) V(IO) (3) OFF-ST V MAX (4) IT(RMS) MAX & (5) TYPE No.

LINE No.	4 TYPE NUMBER	4 IT RMS RATED MAX (A)	3 REP OFF-ST V MAX VDRM (V)	SURGE CURR. MAX ITSM (A)	1 TYPE CODE	INPUT IF RATED MAX (A)	2 MAX ISOL. VOLT VIO (V)	TEMP RNG. CODE - +	COUPLED CHARACTS. 3 MAX INPUT TRIGGER CUR IFT (A)	VAK (V)	TURN ON ton (S)	INPUT DIODE CHARACTS. MAX FWD. V. VF (V)	IF (A)	OUTPUT THYR. CHAR. ON-STATE VOLT (MAX) VTM (V)	ITM (A)	MAX REV I.-IDM Δ-IRM (A)	MAT.	SCHE-MATIC	DRAWING
OPTOCOUPLER, SCR-/HALF-WAVE-OUTPUT																			
4	S102DP1	2.0	120	30	PhSCR		1.5k	28	50m			32				6.0m	XX	None	None
5	MCS2	150m	200		PhSCR	40m	1.5k	5A	14m	100	2.0u	1.5	40m	1.3	100m	2.0u	BC	CD1	PH11 ☑
6	CNY30	300m$	200	10	PhSCR	60m	1.5k	5A	20m	50	9.0u	1.5	10m	1.3	300m	50u	BC AD	CD1	PH16z
7	H11C3	300m	200	5.0	PhSCR	60m	1.5k	5A	30m	50		1.5	10m	1.3	300m	50u	AD	CD1	PH16x
8	H74C1	400m	200	5.0	PhSCR	60m	1.5k	07						1.3	250m	50u	AD	CD1	PH16y
9	MCS2400	150m	400		PhSCR	40m	1.5k	5A	14m	100	4.0u	1.5	40m	1.3	100m	2.0u	BC	CD1	PH11 ☑
10	CNY34	300m$	400	10	PhSCR	60m	1.5k	5A	20m	50	9.0u	1.5	10m	1.3	300m	150u	BC AD	CD1	PH16z
11	S13MD1	300m	400	3.0	PhSCR	70	1.5k	2A	15m	6.0	10u	1.4	30m	1.4	300m	100u	XX	CD1	PH16n
12	H74C2	400m	400	5.0	PhSCR	60m	1.5k	07						1.3	250m	50u	AD	CD1	PH16y
13	PS3001	350m	200	3.0	PhSCR	80m	2.0k	5A	12m		10u	1.4	20m	1.3	300m	10u	XX	CD1	PH16k *
14	PS3002	350m	400	3.0	PhSCR	80m	2.0k	5A	12m		10u	1.4	20m	1.3	300m	10u	XX	CD1	PH16k *
15	MII66033-101	1.0	400	15	PhSCR	100m	2.0k	5C	2.5m		50u	1.7	20m			10u	CE	CD11	PH335
16	MII66033-102	1.0	400	15	PhSCR	100m	2.0k	5C	10m		50u	1.7	20m			10u	CE	CD12	PH335
17	H11C2	300m	200	5.0	PhSCR	60m	2.1k	5A	20m	50		1.5	10m	1.3	300m	50m	AD	CD1	PH16x
18	S105DT1	5.0	120	80	PhSCR		2.5k	28	50m			14				3.5m	XX	None	None
19	S110DT1	10	120	150	PhSCR		2.5k	28	50m			14				3.5m	XX	None	None
20	H11C1	300m	200	5.0	PhSCR	60m	2.5k	5A	20m	50		1.5	10m	1.3	300m	50u	AD	CD1	PH16x
21	PS3001(1)	300m	200	3.0	PhSCR	80m	2.5k	5C%	12m	6	10u	1.4	20m	1.3	300m	10u	BC AD	CD1	PH16k
22	S102DP2	2.0	220	30	PhSCR		2.5k	28	50m			14				1.2m	XX	None	None
23	S202DP1	2.0	220	30	PhSCR		2.5k	28	50m			14				2.4m	XX	None	None
24	S205DT1	5.0	220	80	PhSCR		2.5k	28	50m			14				7.0m	XX	None	None
25	S110DT2	10	220	150	PhSCR		2.5k	28	50m			14				7.0m	XX	None	None
26	S210DT1	10	220	150	PhSCR		2.5k	28	50m			14				7.0m		None	None
27	ON3500	0.1	400	2.0	PhSCR	50m	2.5k	28	15m	6.0	10u	1.5	50m	1.3	0.1	5.0u	BCAD	None ♦	PH16ak
28	TLP541G2	150m	400	2.	PhSCR	50m	2.5k	3A	7.m	6.	10m	1.3	10m	1.3	100m	5u		CD10	PH320
29	TLP541G	150m	400	1.0	PhSCR	50	2.5k	3A	7.0m	6.0	10u	1.3	10m	1.3	100m	5.0u	XX	CD1	PH159
30	TLP542G	150m	400	1.0	PhSCR	70m	2.5k	3A	1.0m	6.0	10u	1.3	10m	1.3	100m	5.0u	AD	None	None
31	PS3002(1)	300m	400	3.0	PhSCR	80m	2.5k	5C%	12m	6	10u	1.4	20m	1.3	300m	10u	BC AD	CD1	PH16k
32	TLP543H	150m	500	0.8	PhSCR	50m	2.5k	3A	7.0m	6.0	10u	1.3	10m	1.3	100m	5.0u	AD	None	None
33	TLP545H	150m	500	1.0	PhSCR	50m	2.5k	3A	7.0m	6.0	10u	1.3	10m	1.3	100m	5.0u	AD	CD1	None
34	TLP543J	150m	600	0.8	PhSCR	50m	2.5k	3A	7.0m	6.0	10u	1.3	10m	1.3	100m	5.0u	AD	None	None
35	TLP545J	150m	600	1.0	PhSCR	50m	2.5k	3A	7.0m	6.0	10u	1.3	10m	1.3	100m	5.0u	AD	CD1	None
36	MCS21	300m	200	3.0	PhSCR	60m	4k	5A	20m	50		1.5	20m	1.3	300m	50u	BC	CD1	PH16v
37	MCS2401	300m	400	3.0	PhSCR	60m	4k	5A	20m	50		1.5	20m	1.3	300m	150u	BC	CD1	PH16v
38	TLP547G	150m	400	2.	PhSCR	70m	5.0k	3A	13m	6.	10m	1.3	10m	1.3	100m	5u		CD10	PH159
39	4N39	300m$	200	10	PhSCR	60m	7.5k	5A	30m	50	50u	1.5	10m	1.3	300m	50uΔ	AD	CD1	PH16z
40	MOC3002	300m	250	3.0	PhSCR	60m	7.5k	5A	30	50		1.5	10m	1.3	300m	50u	BC	CE32	PH16af
41	MOC3003	300m	250	3.0	PhSCR	60m	7.5k	5A	20	50		1.5	10m	1.3	300m	50u	BC	CE32	PH16af
42	MOC3007	300m	250	3.0	PhSCR	60m	7.5k	4A§	40m	50		1.5	10m	1.5	.30	100u	BC	CD1	PH16x
43	IL400(A)	100m	400	1.0	PhSCR	60m	7.5k	5F%	50u	100		1.5	20m	1.2	100m	2.0u	CB	CD1	PH11d ☑
44	4N40	300m$	400	10	PhSCR	60m	7.5k	5A	30m	50	50u	1.5	10m	1.3	300m	150uΔ	AD	CD1	PH16z
45	H11C4(A)	300m	400	5.0	PhSCR	60m	7.5k	5F%	11m	100		1.5	10m	1.3	300m	150u	CB	CD1	PH16y ☑
46	H11C5(A)	300m	400	5.0	PhSCR	60m	7.5k	5F%	11m	100		1.5	10m	1.3	300m	150u	CB	CD1	PH16y ☑
47	H11C6(A)	300m	400	5.0	PhSCR	60m	7.5k	5F%	14m	100		1.5	10m	1.3	300m	150u	CB	CD1	PH16y ☑
48	MOC3000	300m	400	3.0	PhSCR	60m	7.5k	5A	30	50		1.5	10m	1.3	300m	150u	BC	CE32	PH16af
49	MOC3001	300m	400	3.0	PhSCR	60m	7.5k	5A	20	50		1.5	10m	1.3	300m	150u	BC	CE32	PH16af
OPTOCOUPLER, TRIAC-/FULL-WAVE-OUTPUT																			
53	S101DD2	1.0		8.0	PhTrc	40m	1.5k	27	25m	6.0	10u	1.6	30m	1.6	1.0	100u	XX	CD5	PH154
54	S101DD3	1.0		8.0	PhTrc	40m	1.5k	28	25m	6.0	50u	1.6	30m	1.6	1.0	100u	XX	CD6	PH155
55	S13MD3	300m	400	3.0	PhTrc	70	1.5k	2A	15m	6.0	10u	1.4	30m	1.4	300m	100u	XX	CD2	PH56b
56	S101DD4	1.0	400	8	PhTrc		1.5k	28	10m	6						1.0u	XX	CD4	None
57	S102DD2	2.0	400	16	PhTrc		1.5k	28	25m	6						1.0u	XX	CD5	PH154
58	S201DD2	1.0	600	8	PhTrc		1.5k	28	25m	6						1.0u	XX	CD5	PH154
59	TLP511GA	150m	400	1.0	PhTrc	50m	2.5k	3A	7.0m	6.0	10u	1.3	10m	1.3	100m	5.0u	AD	CD2	None
60	TLP546G	1.0	400	10	PhTrc	50	2.5k	38	12m	6.0		1.4	30m	2.0	2.0	100u	BC	CD4	PH136
OPTOCOUPLER, TRIAC-DRIVER-OUTPUT																			
64	H11J5	100m	250	1.2	TrDvr	60m	1.5k	4A§	25m	3.0		1.5	10m	3.0	100m	100n	BC AD	CD3	PH16y
65	H11J3	100m	250	1.2	TrDvr	60m	2.5k	4A§	10m	3.0		1.5	10m	3.0	100m	100n	BC AD	CD3	PH16y
66	H11J4	100m	250	1.2	TrDvr	60m	2.5k	4A§	15m	3.0		1.5	10m	3.0	100m	100n	BC AD	CD3	PH16y
67	OPI3009	100m	250	1.2	TrDvr	50m	2.5k	47	30m	3.0		1.5	10m	3.0	100m	100n	BC	CD3	PH16
68	OPI3010	100m	250	1.2	TrDvr	50m	2.5k	47	15m	3.0		1.5	10m	3.0	100m	100mΔ	BC	CD3	PH16
69	OPI3011	100m	250	1.2	TrDvr	50m	2.5k	47	10m	3.0		1.5	10m	3.0	100m	100mΔ	BC	CD3	PH16
70	OPI3012	100m	250	1.2	TrDvr	50m	2.5k	48	5.0m	3.0		1.5	10m	3.0	100m	100u	XX	CD3	PH16
71	OPI3030	400m	250	1.2	TrDvr	50m	2.5k	48	30m	3.0		1.7	30m	3.0	100m	100n	BC	CD3	PH16 ☑
72	OPI3031	400m	250	1.2	TrDvr	50m	2.5k	48	15m	3.0		1.7	30m	3.0	100m	100n	BC	CD3	PH16 ☑
73	OPI3032	400m	250	1.2	TrDvr	50m	2.5k	48	10m			1.7	30m	3.0	100m	100n	BC	CD3	PH16 ☑
74	OPI3033	400m	250	1.2	TrDvr	50m	2.5k	48	5.0m			1.7	30m	3.0	100m	100n	BC	CD3	PH16 ☑
75	OPI3020	100m	400	1.2	TrDvr	50m	2.5k	48	30m	3.0		1.5	10m	3.0	100m	100u	XX	CD3	PH16
76	OPI3021	100m	400	1.2	TrDvr	50m	2.5k	48	15m	3.0		1.5	10m	3.0	100m	100u	XX	CD3	PH16
77	OPI3022	100m	400	1.2	TrDvr	50m	2.5k	48	10m	3.0		1.5	10m	3.0	100m	100u	XX	CD3	PH16
78	OPI3023	100m	400	1.2	TrDvr	50m	2.5k	48	5.0m	3.0		1.5	10m	3.0	100m	100u	XX	CD3	PH16
79	OPI3040	400m	400	1.2	TrDvr	50m	2.5k	48	30m	3.0		1.7	30m	3.0	100m	100n	BC	CD3	PH16 ☑
80	OPI3041	400m	400	1.2	TrDvr	50m	2.5k	48	15m	3.0		1.7	30m	3.0	100m	100n	BC	CD3	PH16 ☑
81	OPI3042	400m	400	1.2	TrDvr	50m	2.5k	48	10m			1.7	30m	3.0	100m	100n	BC	CD3	PH16 ☑
82	OPI3043	400m	400	1.2	TrDvr	50m	2.5k	48	5.0m			1.7	30m	3.0	100m	100n	BC	CD3	PH16 ☑
83	IL416(A)	135m	600	1.2	TrDvr	60m	3.5k	5F%	10m	5.0		1.5	60m	3.0	100m		CB	None ♦	PH354 ☑
84	H11J1	100m	250	1.2	TrDvr	60m	4.0k	4A§	10m	3.0		1.5	10m	3.0	100m	100n	BC AD	CD3	PH16y
85	H11J2	100m	250	1.2	TrDvr	60m	4.0k	4A§	15m	3.0		1.5	10m	3.0	100m	100n	BC AD	CD3	PH16y
86	GE3009	100m	250	1.2	TrDvr	50m	5.3k	4A	30m	3.0		1.5	10m	3.0	100m	100uΔ	BC	CD3	PH1 ☑
87	GE3010	100m	250	1.2	TrDvr	50m	5.3k	4A	15m	3.0		1.5	10m	3.0	100m	100uΔ	BC	CD3	PH1 ☑
88	GE3011	100m	250	1.2	TrDvr	50m	5.3k	4A	10m	3.0		1.5	10m	3.0	100m	100uΔ	BC	CD3	PH1 ☑
89	GE3012	100m	250	1.2	TrDvr	50m	5.3k	4A	5.0m	3.0		1.5	10m	3.0	100m	100uΔ	BC	CD3	PH1 ☑
90	K3010P	150m	250	1.5	TrDvr	80m	5.3k	5A%	15m	3.0		1.6	50m	3.0	100m		BC	CD9	PH16an
91	K3010PG	150m	250	1.5	TrDvr	80m	5.3k	5A%	15m	3.0		1.6	50m	3.0	100m		BC	CD9	PH16an
92	GE3020	100m	400	1.2	TrDvr	50m	5.3k	4A	30m	3.0		1.5	10m	3.0	100m	100uΔ	BC	CD3	PH1 ☑
93	GE3021	100m	400	1.2	TrDvr	50m	5.3k	4A	15m	3.0		1.5	10m	3.0	100m	100uΔ	BC	CD3	PH1 ☑
94	GE3022	100m	400	1.2	TrDvr	50m	5.3k	4A	10m	3.0		1.5	10m	3.0	100m	100uΔ	BC	CD3	PH1 ☑
95	GE3023	100m	400	1.2	TrDvr	50m	5.3k	4A	5.0m	3.0		1.5	10m	3.0	100m	100uΔ	BC	CD3	PH1 ☑
96	K3020P	150m	400	1.5	TrDvr	80m	5.3k	5A%	15m	3.0		1.6	50m	3.0	100m		BC	CD9	PH16an
97	K3020PG	150m	400	1.5	TrDvr	80m	5.3k	5A%	15m	3.0		1.6	50m	3.0	100m		BC	CD9	PH16an
98	K3021P	150m	400	1.5	TrDvr	80m	5.3k	5A%	30m	3.0		1.6	50m	3.0	100m		BC	CD9	PH16an
99	K3021PG	150m	400	1.5	TrDvr	80m	5.3k	5A%	30m	3.0		1.6	50m	3.0	100m		BC	CD9	PH16an
100	IL420	300m	600	3.0	TrDvr	60m	5.3k	5F%	2.0m	5.0		1.5	60m	3.0	300m		CB	CD3	PH11 ☑
101	MOC3009	100m	250	1.2	TrDvr	60m	7.5k	4A§	30m	3.0		1.5	10m	3.0	100m	100n	BC/AD	CD3	PH129
102	MOC3010	100m	250	1.2	TrDvr	60m	7.5k	4A§	15m	3.0		1.5	10m	3.0	100m	100n	BC AD	CD3	PH129
103	MOC3011	100m	250	1.2	TrDvr	60m	7.5k	4A§	10m	3.0		1.5	10m	3.0	100m	100n	BC AD	CD3	PH129
104	MOC3012	100m	250	1.2	TrDvr	50m	7.5k	47	5.0m	3.0		1.5	10m	3.0	100m	100n	BC AD	CD3	PH129
105	MOC3030	100m	250	1.2	TrDvr	50m	7.5k	4A§	30m	3.0		1.5	30m	3.0	100m	100u	AD BC	CD3	PH129
106	MOC3031	100m	250	1.2	TrDvr	50m	7.5k	4A§	15m	3.0		1.5	30m	3.0	100m	100u	AD BC	CD3	PH129
107	MOC3032	100m	250	1.2	TrDvr	50m	7.5k	47	10m	3.0		1.5	30m	3.0	100m	100n	BC AD	CD3	PH129
108	MOC633A	100m	400	1.2	TrDvr	60m	7.5k	5A§	30m	3.0		1.5	10m	3.0	100m		CB	CD3	PH129c
109	MOC634A	100m	400	1.2	TrDvr	60m	7.5k	5A§	15m	3.0		1.5	10m	3.0	100m		CB	CD3	PH129c
110	MOC635A	100m	400	1.2	TrDvr	60m	7.5k	5A§	10m	3.0		1.5	10m	3.0	100m		CB	CD3	PH129c

SYMBOLS AND CODES EXPLAINED IN INTERPRETER

28. OPTOCOUPLERS: PHOTOTHYRISTOR OUTPUT (Cont'd)

IN ORDER OF: (1) TYPE (2) V(IO) (3) OFF-ST V MAX (4) IT(RMS) MAX & (5) TYPE No.

LINE No.	4 TYPE NUMBER	4 IT RMS RATED MAX (A)	3 REP OFF-ST V MAX VDRM (V)	SURGE CURR. MAX ITSM (A)	1 TYPE CODE	INPUT IF RATED MAX (A)	2 MAX ISOL. VOLT VIO (V)	TEMP RNG. CODE - +	COUPLED CHARACTS. 3 MAX INPUT TRIGGER CUR IFT (A)	VAK (V)	TURN ON ton (S)	INPUT DIODE CHARACTS. MAX FWD. V. VF (V)	IF (A)	OUTPUT THYR. CHAR. ON-STATE VOLT (MAX) VTM (V)	ITM (A)	MAX REV I.-IDM Δ-IRM (A)	MAT.	SCHE-MATIC	DRAWING
1	MOC640A	100m	400	1.2	PhTrc	60m	7.5k	5A§	30m	3.0		1.5	10m	3.0	100m		CB	CD8	PH129c
2	MOC641A	100m	400	1.2	PhTrc	60m	7.5k	5A§	15m	3.0		1.5	10m	3.0	100m		CB	CD8	PH129c
3	MOC3020	100m	400	1.2	TrDvr	50m	7.5k	4A§	30m	3.0		1.5	10m	3.0	100m	100n	BC/AD	CD3	PH129
4	MOC3021	100m	400	1.2	TrDvr	50m	7.5k	4A§	15m	3.0		1.5	10m	3.0	100m	100n	BC/AD	CD3	PH129
5	MOC3022	100m	400	1.2	TrDvr	50m	7.5k	47	10m	3.0		1.5	10m	3.0	100m	100n	BC AD	CD3	PH129
6	MOC3023	100m	400	1.2	TrDvr	50m	7.5k	47	5.0m	3.0		1.5	10m	3.0	100m	100n	BC AD	CD3	PH129
7	MOC3040	100m	400	1.2	TrDvr	50m	7.5k	4A§	30m	3.0		1.5	30m	3.0	100m	100n	BC	CD3	PH16x
8	MOC3041	100m	400	1.2	TrDvr	50m	7.5k	4A§	15m	3.0		1.5	30m	3.0	100m	100n	BC	CD3	PH16x
9	IL410(A)	300m	600	1.2	PhTrc	60m	7.5k	5F%	2.0m	5.0		1.5	60m	3.0	300m		CB	CD8	PH129c ∅
10	MOC3060	300m	600	1.2		50m	7.5k	A §	30m	3.0		1.5	30m	3.0	100m		AD/BC	FB178	PH16z
11	MOC3061	300m	600	1.2		50m	7.5k	A §	30m	3.0		1.5	30m	3.0	100m		AD/BC	FB178	PH16z
12	MOC3062	300m	600	1.2		50m	7.5k	A §	30m	3.0		1.5	30m	3.0	100m		AD/BC	FB178	PH16z
13	MOC3063	300m	600	1.2		50m	7.5k	A §	30m	3.0		1.5	30m	3.0	100m		AD/BC	FB178	PH16z
14	CNR21	150m	400	3.0	TrDvr	80m	15k	5A%	30m	3.0		1.6	50m	3.0	100m		BC	CD13	PH291b

Our POWER SEMICONDUCTOR book brings the specifications and sources of more than 65,000 discretes to your fingertips.

29. OPTOCOUPLERS: PHOTOCIRCUIT OUTPUT - Amplifier-Output

IN ORDER OF: (1) OUTPUT CIRCUIT CODE (2) SCHEMATIC & (3) TYPE NUMBER

LINE No.	3 TYPE NUMBER	1 OUTPUT CIRCUIT CODE	I/P EMIT -TER CODE	MAX. RATINGS @ 25°C PD (W)	SUPP ΔVs Pk-Pk (V)	VR (V)	FWD. CURR. IF (A)	ISOL. VOLT VIO (V)	TEMP RNG. CODE - +	PROP DELAY TIME tpd (S)	MAX IN REV I @VR IR (A)	OUTPUT LOGIC LEVELS VOH MIN (V)	VOL MAX (V)	DESCRIPTION	2 SCHE-MATIC	DRAWING
OPTOCOUPLER, AMPLIFIER-OUTPUT																
4	OTS41LN	Amplif	1	300m	7.0		50m		07	15n*#		2.7	.50	Optical Switches	BE65	PH149 ☑
5	OTS41LP	Amplif	1	300m	7.0		50m		07	15n*#		2.7	.50	Optical Switches	BE65	PH149 ☑
6	OTS42LN	Amplif	1	300m	7.0		50m		07	15n*#		2.7	.50	Optical Switches	BE65	PH150 ☑
7	OTS42LP	Amplif	1	300m	7.0		50m		07	15n*#		2.7	.50	Optical Switches	BE65	PH150 ☑
8	HCPL2602	Amplif§	1	40m♦	7.0	.95	60m	3.0k	07	45n	5.0m	$	.60	Terminated line Recvr	CE18	PH56e
9	FDA548	Amplif§	1		15		8.0m		27	5.0n#				Re 905nm-150V/uW	CE22	PH144
10	FDA555	Amplif§	1		15		8.0m		27	10n#				Re 905nm-400mV/uW	CE22	PH144
11	FDG559	Amplif§	1		15		25m		27	2.0n#				Re 905nm-50mV/uW	CE22	PH144
12	R1000-500	Amplif§	1				8.0m		27	3.0u#				Re at 905nm-250mV/uW	CE23	TO-5
13	R1000-1000	Amplif§	1				8.0m		27	6.0u#				Re at 905nm-500mV/uW	CE23	TO-5
14	OTS81LN	Amplif	1	300m	7.0		50m		07	15n*#		2.7	.50	Optical Switches	CE30	PH149 ☑
15	OTS81LP	Amplif	1	300m	7.0		50m		07	15n*#		2.7	.50	Optical Switches	CE30	PH149 ☑
16	OTS82LN	Amplif	1	300m	7.0		50m		07	15n*#		2.7	.50	Optical Switches	CE30	PH150 ☑
17	OTS82LP	Amplif	1	300m	7.0		50m		07	15n*#		2.7	.50	Optical Switches	CE30	PH150 ☑
18	HCPL2631	Amplif	2	40m♦	7.0	5.	10m	3.0k	07$	75n	10u	7.0$	.6	Dual Channel	CE40	PH56c
19	HCPL2300	Amplif	1	40m♦	7.0	4.5	5m	3.0k	48	160n	10u	18$	.5	Optional Pull-Up Rstr	CE50	PH56c
20	HCPL4100	Amplif	1	360m	20	.5	250u	3.0k	48	1.6u	.32m		.8	Current Loop Xmitter	CE51	PH56c
21	HCPL1930	Amplif	2	564 ♦	5.5		60m	1.5k	5C	55n#	60m	$	.6	Dual Channel	CE61	PH279
22	HCPL1931	Amplif	2	564 ♦	5.5		60m	1.5k	5C	55n#	60m	$	.6	Dual Channel	CE61	PH279
23	OTS253	Amplif	1	100m		6.0	3.0		5A		100n			Interrupt Switch	None	PS4b ☑
OPTOCOUPLER, LOGIC-GATE-OUTPUT																
27	PS2007B	LgGate	1	85m		5.0	10m	3k	07	50n	10u		0.6	Photo Coupler	CE14	PH56e
28	HCPL2630	LgGate§	2	60m♦	5.0	5.0	15m	3.0k	07	55n	10u	7.0☑	.60	Dual Open Call Output	CE15 #	PH56e
29	6N134	LgGate	2	348m		5.0	20m	1.5k	5A	90n	10u	5.5†	.60	Dual	CE16	PH30a
30	6N137	LgGate§	1	85m	5.0	5.0	15m	3.0k	07	75n			0.6	Open Collector Ouput	CE17	PH56e
31	HCPL2601	LgGate§	1	40m♦	5.5	5.0	20m		07	40n		7.0☑$	0.6	Optocoupler	CE17	PH56e
32	HCPL2200	LgGate	1	210m	20	5	5m		48	210n		2.4	0.5	Logic Gate Coupler	CE38	PH56e
33	MCL2601	LgGate§	1	40m	5.5	5.0	20m		07	75n	10u	7.0	0.6	Optoisolator	CE41	PH56e
34	HCPL4200	LgGate	1	255m	20	.5	30m	3.0k	48	1.6u	30m	2.4	.5	Current Loop Receiver	CE52	PH56c
35	OC40(1)	LgGate§	1		5.0	3.0	30m	1.0k	07	100n	100u		0.5	NAND optocoupler	CE53	PH56h ☑
36	PN71001	LgGate	4		5.0			800	0A	100u		2.4	0.4		None	None
37	PN71003	LgGate	4		5.0			800	0A	100u		2.4	0.4		None	None
OPTOCOUPLER, SCHMITT-TRIGGER-OUTPUT																
41	IL101	Schmit	1	100m	5.0	5.0	10m	6.0k	5F%	100n		2.0	0.8	CTR 10;Tri-State	CE14	PH56f
42	OPB947	Schmit	1		10	3.0	40m		47	5u	100u		0.4	Buffer; Totem Out	CE27	PH161
43	OPB948	Schmit	1		10	3.0	40m		47	5u	100u	$	0.4	Buffer	CE27	PH161
44	OPC8012	Schmit	1		5.2		15m		5C			2.4	0.4	Buffer Totem-pole	CE27	PH295 *
45	OPI125	Schmit	1	250m♦	10	2.0	25m	15k	5A	5.0u	100u	2.4	0.4	Totem Pole Out	CE27	PH86
46	OPI126	Schmit	1	250m♦	10	2.0	25m	15k	5A	5.0u	100u		0.4	Open-Coll 0ut	CE27	PH86
47	OPI127	Schmit	1	250m♦	10	2.0	25m	15k	5A	5.0u	100u	2.4	0.4	Totem Pole Out	CE27	PH86
48	OPI128	Schmit	1	250m♦	10	2.0	25m	15k	5A	5.0u	100u		0.4	Open-Coll Out	CE27	PH86
49	OPI8012	Schmit	1		10	3.0	40m	1.5k	47	5u	10u		0.4	OPI8013W/TOTEM Out	CE27	PH161
50	OPI8014	Schmit	1		10	3.0	25m	1.5k	48	5.0u	10u	2.4	.40	Totem Pole Out	CE27	PH16
51	OPL550	Schmit§	1		5.3				47	5.0u		2.4	.40	W/Linear Amplifier	CE27	PH162
52	OPL551	Schmit	1		10	5.2			47	5u				Invert; Totem Out	CE27	PH169
53	OPL800	Schmit	1	200m	10	5.2			5C	5u			0.4	Buffer; Totem Out	CE27	TO-18
54	OPL801	Schmit	1	200m	10	5.2			5C	5u				Invert; Totem Out	CE27	TO-18
55	OPI8013	Schmit	1		10	3.0	40m	1.5k	47	5u	10u	$	0.4	GaAs IR LED/IC	CE28	PH161
56	OPI8015	Schmit	1		10	3.0	25m	1.5k	48	5.0u	10u	2.4	.40	Open Collector Out	CE28	PH16
57	OPL550OC	Schmit	1		10	5.2			47	5u		$	0.4	Buffer	CE28	PH169
58	OPL551OC	Schmit	1		10	5.2			47	5u		$	0.4	Inverter	CE28	PH169
59	OPL800OC	Schmit	1	200m	10	5.2			5C	5u		$	0.4	Buffer	CE28	TO-18
60	OPL801OC	Schmit	1	200m	10	5.2			5C	5u		$	0.4	Inverter	CE28	TO-18
61	H11L1	Schmit	1	100m	15	6.0	60m	2.1k	5A	1.0u	10u		.40	Opto Coupled/Isolator	CE29	PH16z
62	H11L2	Schmit	1	100m	15	6.0	60m	2.1k	5A	1.0u	10u		.40	Opto Coupled/Isolator	CE29	PH16z
63	H11L3	Schmit	1	100m	15	6.0	60m	2.5k	5A	1.0u	10u		.40	Photo-Coupled Isolatr	CE29	PH50d
64	MOC5007	Schmit	1	150m	16	6.0	60m	7.5k	5A	.1u#	10u		0.4	Opto Coupler/Isolator	CE29	PH50e
65	MOC5008	Schmit	1	150m	16	6.0	60m	7.5k	5A	.1u#	10u		0.4	Opto Coupler/Isolator	CE29	PH50e
66	MOC5009	Schmit	1	150m	16	6.0	60m	7.5k	5A	.1u#	10u		0.4	Opto Coupler/Isolator	CE29	PH50e
67	CLA90	Schmit§	1	300m	15	3.0	40m	7.0k	4A	27u	10u	3.5	0.4	Digital Output	CE35 ♦	PH281
68	CLA90AA	Schmit§	1	300m	15	3.0	40m	7.0k	4A	27u	10u	3.5	0.4	Digital Output	CE35 ♦	PH281
69	OPC8013	Schmit	1		5.2		15m		5C			35$	0.4	Buffer-Open Collector	CE42	PH295 *
70	OPC8015	Schmit	1		5.2		15m		5C			2.4	0.4	Inverter-Open Collect	CE43	PH295 *
71	OPC8014	Schmit	1		5.2		15m		5C			35$	0.4	Inverter-Totem Pole	CE44	PH295 *
72	K8031P	Schmit	1	350m	6.5	5	60m	5.3k	A §	30n#	100u		0.4	Opto-Isolator	CE49	PH31b ☑
73	PC900	Schmit	1	150m	16	6.0	50m	5.0k	28	2.0u			0.4	TTL/MOS Compatatible	CE54	PH31 ☑
OPTOCOUPLER, TRANSISTOR-STAGE-OUTPUT																
77	OTS41CN	TrnStg	1	300m	7.0		50m		07	60n*#				Optical Switches	BE65	PH149 ☑
78	OTS41CP	TrnStg	1	300m	7.0		50m		07	60n*#				Optical Switches	BE65	PH149 ☑
79	OTS42CN	TrnStg	1	300m	7.0		50m		07	60n*#				Optical Switches	BE65	PH150 ☑
80	OTS42CP	TrnStg	1	300m	7.0		50m		07	60n*#				Optical Switches	BE65	PH150 ☑
81	4N45	TrnStg	1	100m♦	7.0	5.0	20m	3.0k	47	500u	10u	$	1.2	CTR 200% Min	CC7	PG16aa
82	4N46	TrnStg	1	100m♦	20	5.0	20m	3.0k	47	500u	10u	$	1.2	CTR 200% Min	CC7	PG16aa
83	HCPL2730	TrnStg§	2	100 ♦	7.0	5.0	20m	3.0k	48	10u	10u	$	.40	Dual Out;CTR 300% Min	CE19 #	PH56e
84	HCPL2731	TrnStg§	2	100 ♦	18	5.0	20m	3.0k	48	10u	10u	$	.40	Dual Out;CTR 400% Min	CE19 #	PH56e
85	HCPL5730	TrnStg	2	50m♦	20	5.0	8.0m	500	5C	17u		$		Dual Chi Typ CTR1500%	CE19	PH321
86	HCPL5731	TrnStg	2	50m♦	20	5.0	8.0m	500	5C	17u		$	.4	Dual Chi Typ CTR1500%	CE19	PH321
87	8302401EC	TrnStg	4	50m♦	20	5.0	10m	1.5k	5C	30u#		$	.4	Quad ch;Typ CTR 1500%	CE21	PH279
88	HCPL3700	TrnStg	1	210m♦	20			3.0k	07	10u		$	.4	AC/DC Input;Open Coll	CE24	PH56e
89	HCPL2530	TrnStg§	2	70m	30	5.0	25m		5A	1.5u			0.5	CTR 5% min	CE3 #	PH56e
90	HCPL2531	TrnStg§	2	70m	30	5.0	25m		5A	800n	10u		0.5	CTR 15% min	CE3 #	PH56e
91	HCPL2533	TrnStg	2	100m	7.0	5.0	25m		5A	2.0u			.50	CTR 15% min	CE3	PH56e
92	OTS81CN	TrnStg	1	300m	7.0		50m		07	60n*#				Optical Switches	CE30	PH149 ☑
93	OTS81CP	TrnStg	1	300m	7.0		50m		07	60n*#				Optical Switches	CE30	PH149 ☑
94	OTS82CN	TrnStg	1	300m	7.0		50m		07	60n*#				Optical Switches	CE30	PH150 ☑
95	OTS82CP	TrnStg	1	300m	7.0		50m		07	60n*#				Optical Switches	CE30	PH150 ☑
96	PS2016B	TrnStg	1	45m	15	5.0	25m	2.5k	5A	300n*#	5.0		0.4	Photo Coupler	CE37	PH158
97	HCPL2400	TrnStg	1	40m♦	7.0	3.0	10m		08	30n	10u	$	.5	Tri-state output	CE38a	PH56e
98	SL5505	TrnStg	1	100m♦	15	3	25m		5A	.8u	50u		0.4	High Speed Coupler	CE39	PH56e
99	8102801EC	TrnStg	2	350m	7		20m		5C	140n#			0.6	Dual Channel Coupler	CE40	PH30
100	6N138	TrnStg§	1	100m♦	7.0	5.0	20m	6.0k	07	35u	10u		0.4	CTR 600% Typ;Io 60mA	CE5	PH56e
101	6N139	TrnStg§	1	100m♦	18	5.0	20m	6.0k	07	60u	10u		.4	CTR 900%;Io 60mA	CE5	PH56e
102	MII66008-100	TrnStg	1					5.0k		1.5u	10u			Optotransformer	CE56	PH336
103	MII66008-101	TrnStg	1					5.0k		1.5u	10u			Optotransformer	CE57	PH336
104	HCPL2502	TrnStg§	1	100m♦	30	5.0	25m	3.0k	5A	800n	10u	15☑$	.40	CTR 15% min,22%max	CE6	PH56e
105	6N135	TrnStg§	1	100m♦	15	5.0	25m	3.0k	07	1.5u			.4	CTR 7% min	CE6a	PH56e
106	6N136	TrnStg§	1	100m♦	30	5.0	25m		5A	1.5u	10u		.4	CTR 19% min	CE6a	PH56e
107	OP12502	TrnStg	1	100m♦	15	5	25m		5A	0.8u			0.4	Opto coupler	CE6a	PH56e
108	PS2006B	TrnStg	1	100m	15	5.0	25m	3k	5A	300n*#	10u		0.4	Equivalent to 6N137	CE6a	PH56e
109	PS2006-1	TrnStg	1	45m	15	5.0	25m	3.0k	5A	300n	10u			High Speed;BV2.5kV	CE6b	PH158
110	ON3401	TrnStg§	1	120m♦	15	3.0	25m	2.5k	28	400n	100u			CTR 60% max;15% min	CE60	PH16ak

SYMBOLS AND CODES EXPLAINED IN INTERPRETER

29. OPTOCOUPLERS: PHOTOCIRCUIT OUTPUT (Cont'd)

IN ORDER OF: (1) OUTPUT CIRCUIT CODE (2) SCHEMATIC & (3) TYPE NUMBER

LINE No.	3 TYPE NUMBER	1 OUTPUT CIRCUIT CODE	I/P EMIT -TER CODE	MAX. RATINGS @ 25°C PD (W)	SUPP ΔVs Pk-Pk (V)	VR (V)	FWD. CURR. IF (A)	ISOL. VOLT VIO (V)	TEMP RNG. CODE - +	PROP DELAY TIME tpd (S)	MAX IN REV I @VR IR (A)	OUTPUT LOGIC LEVELS VOH MIN (V)	VOL MAX (V)	DESCRIPTION	2 SCHE-MATIC	DRAWING
1	HCPL5700	TrnStg	1	50m♦	20	5.0	8.0m	500	5C	17u		$	.4	Typ CTR 1500%	CE62	PH321
2	HCPL5701	TrnStg	1	50m♦	20	5.0	8.0m	500	5C	17u		$	.4	Typ CTR 1500%	CE62	PH321
3	HCPL4502	TrnStg§	1	100m♦	30	5.0	25m		5A	300n	10u	$	.4	CTR 15% min	None	PH56e
4	SPI1	TrnStg	1	150m		20	100m		28		10u			Photo Interrupter	None	None
5	SPI2	TrnStg	1	100m		5.0	50m		28		20u			Photo Interrupter	None	None
6	SPI3	TrnStg	1	70m		3.0	30m		27		15u			Photo Interrupter	None	None
7	SPI4	TrnStg	1	23m		3.0	10m		16		15u			Photo Interrupter	None	None
8	SPI5	TrnStg	1	50m		3.0	50m		28		20u			Photo Interrupter	None	None
9	SPI6	TrnStg	1	100m		6.0	60m		4A		1.0u			Photo Interrupter	None	None
10	SPI7	TrnStg	1	100m		6.0	60m		4A		1.0u			Photo Interrupter	None	None
11	STOC1410	TrnStg	1					3.0k	48	1.0u#					None	PH90 Ø
12	STOC1411	TrnStg	1					3.0k	48	1.0u#					None	PH90 Ø
13	STOC1412	TrnStg	1					3.0k	48	1.0u#					None	PH90 Ø

For your high-reliability semiconductor needs, try D.A.T.A.'s quarterly MILITARY ELECTRONIC DEVICES GUIDE.

SYMBOLS AND CODES EXPLAINED IN INTERPRETER

35. LED CHARACTER DISPLAYS - Seven-Segment Numeric

IN ORDER OF FONT AND: (1) CHAR. HEIGHT (2)NO. CHAR. (3) INTENSITY & (4) TYPE NO.

LINE No.	4 TYPE NUMBER	1 CHAR. HGHT (in)	2 NO. CHAR	3 LUMINOUS INTENSITY Iv MIN (cd)	IF TEST (A)	COLOR	CONN.	DISP NOMEN	PD RATED MAX (W)	IF RATED MAX (A)	TEMP RNGE CODE - +	FORWARD VOLTAGE VF MAX (V)	IF TEST (A)	PEAK WAVE-LENGTH λP (m)	FEATURES	DRAWINGS SCHE-MATIC	OUTLINE
DISPLAY, LED SEVEN-SEGMENT NUMERIC																	
4	MMH62M		.5*	67u△	10m	Red		N		10m		1.8	10m	655n		None	PY1070
5	MMH62W		.5*	67u△	10m	Red		N		10m		1.8	10m	655n		None	PY1070
6	PMO2		.5	1.0m	15m	Red	UNIV	PP	500m	40m	5A	2.8	15m	690m	Plus-Minus	E141ad	None
7	MMH75M		1	67u△	10m	Red		N		10m		1.8	10m	655n		None	PY1071
8	MMH78M		1	67u△	10m	Red		N		10m		1.8	10m	655n		None	PY1072
9	HP5082-4987		1	1.6m	25m	Green		FH	120m	35m	5A	3.0	25m	565n	Isolat Case	None ♦	PD369 Ø
10	AL113K	.05	1		5.0m	Red		N	88m	5.5m	67	2.0	5.0m			None	PY438 ☑
11	AL113L	.05	1		5.0m	Red		N	88m	5.5m	67	2.0	5.0m			None	PY438 ☑
12	AL113M	.05	1		5.0m	Red		N	88m	5.5m	67	2.0	5.0m			None	PY438 ☑
13	AL113N	.05	1		5.0m	Red		N	88m	5.5m	67	2.0	5.0m			None	PY438 ☑
14	AL113R	.05	1		5.0m	Red		N	88m	5.5m	67	2.0	5.0m			None	PY438 ☑
15	AL113S	.05	1		5.0m	Red		N	88m	5.5m	67	2.0	5.0m			None	PY438 ☑
16	AL113A	.08	1		5.0m	Red		N	88m	5.5m	67	2.0	5.0m			None	PY438 ☑
17	AL113B	.08	1		5.0m	Red		N	88m	5.5m	67	2.0	5.0m			None	PY438 ☑
18	AL113D	.08	1		5.0m	Red		N	88m	5.5m	67	2.0	5.0m			None	PY438 ☑
19	AL113E	.08	1		5.0m	Red		N	88m	5.5m	67	2.0	5.0m			None	PY438 ☑
20	AL113G	.08	1		5.0m	Red		N	88m	5.5m	67	2.0	5.0m			None	PY438 ☑
21	AL113I	.08	1		5.0m	Red		N	88m	5.5m	67	2.0	5.0m			None	PY438 ☑
22	AL113SZ	.08	1		5.0m	Red		N	88m	5.5m	67	2.0	5.0m			None	PY438 ☑
23	AL113V	.08	1		5.0m	Red		N	88m	5.5m	67	2.0	5.0m			None	PY438 ☑
24	ALS339A	.10	.5	.02m	3.0m				76m	5.0m	67	1.9	3m			None	None
25	ALS313A5	.10	1			Red		N				1.6	5.0m	660n		None	PY439 ☑
26	ALS314A	.10	1					N		8m	67	2.0	5m			None ♦	PY436a
27	ALS323A5	.10	1	.05m	3m			N		4m	16	1.6	3m			None	PY1111a
28	ALS322A5	.10	1	.06m	5m			N		4m	16	1.6	5m			None	PY1111
29	LTB0022	.10	2	350u	10m	Red	CC	N	2.4	5.0m	26	2.2	20m	655n	Multplx	E112c	PY1425
30	LTB0028	.10	2	350u	10m	Red		NR	2.4	5.0m	26	2.2	20m	655n	Multplx	E112d	PY1425
31	LTB0038	.10	3	350u	10m	Red	CC	NR	2.4	5.0m	26	2.2	20m	655n	Multplx	E113a	PY1425
32	NSA0038	.10	3	370u△	2.5m△	Red	CC	NR		70m	27	2.0	5.0m	660n		E113a	PY624
33	AN3	.10	3	1.5m	5.0m	Red	CC	AE	500m	10m	29	2.0	20m	700n		E123a	PY408 ☑
34	ALS329A	.10	4	.05m	3m			NDT		5m	25	1.8	3.0m			None	PY58a
35	ALS329B	.10	4	.05m	3m			NDT		5m	25	1.8	3.0m			None	PY58a
36	ALS329D	.10	4	.05m	3m			NDT		5m	25	1.8	3.0m			None	PY58a
37	ALS329E	.10	4	.05m	3m			NDT		5m	25	1.8	3.0m			None	PY58a
38	ALS329G	.10	4	.05m	3m			NDT		5m	25	1.8	3.0m			None	PY58a
39	ALS329V	.10	4	.05m	3m			NDT		5m	25	1.8	3.0m			None	PY58a
40	LTB0047	.10	4	350u	10m	Red		N	2.4	5.0m	26	2.2	20m	655n	Multplx	E124l	PY1474
41	ALS328A	.10	5	.05m	3m			NDT		5m	25	1.8	3m			None	PY57a
42	ALS328B	.10	5	.05m	3m			NDT		5m	25	1.8	3m			None	PY57a
43	LTB1466	.10	6	350u	10m	Red	CC	NR	2.4	5.0m	26	2.2	20m	655n	Multplx	E186a	PY1426
44	NSA1166	.10	6	400u△	5.0m	Red	CC	NR		7.0m	27	2.0	5.0m	660n		E186a	PY107b
45	LTB1478	.10	7	350u	10m	Red		NR	2.4	5.0m	26	2.2	20m	655n	Multplx	E187a	PY1426
46	LTB1488	.10	8	350u	10m	Red	CC	NR	2.4	5.0m	26	2.2	20m	655n	Multplx	E188a	PY1426
47	NSA1188	.10	8	370u△	5.0m	Red	CC	NR		7.0m	27	2.0	5.0m	660n		E188c	PY107c
48	D1009	.10	9			Red		NR							-Mplxd	E189	PY172
49	5082-7441	.10	9	9u	5m	Red	CC	NR	50m#	3.0m	28	1.5 †	5.0m	655n	C	E179b	PY1206
50	NSA598	.10	9	200u△	7.0m△	Red	CC	NR		60m	27	2.0	7.0m	660n		E189a	PY623
51	LTB1498	.10	9	350u	10m	Red	CC	NR	2.4	5.0m	26	2.2	20m	655n	Multplx	E189a	PY1426
52	NSA1198	.10	9	370u	2.5m△	Red	CC	NR		7.0m	27	2.0	5.0m	660n		E189a	PY107 △
53	HP5082-7441	.105	9	9.0u	5.0m△	Red	CC	NR	50m	3.0m	28	1.5 †	5.0m	655n	Calculator	E179b	PY172a☑
54	5082-7432	.11	2	10u	5.m	Red	CC	NR	80m#	5m	47	2.0	5m	655n	ComCath	E123b	PY71
55	HP5082-7432	.11	2	10u	5.0m△	Red	CC	NR	80m	5.0m	47	2.0	5.0m	655n		E123b	PY171 ☑
56	5082-7433	.11	3	10u	5.m	Red	CC	NR	80m#	5m	47	2.0	5m	655n	ComCath	E123c	PY71
57	HP5082-7433	.11	3	10u	5.0m△	Red	CC	NR	80m	5.0m	47	2.0	5.0m	655n		E123c	PY171 ☑
58	DL330M	.11	3*	2.5m	5.0m△	Red	CC	NR	320m	20m*	27%	2.0	20m	660n	Multiplex Op	E123c	PY541 ☑
59	5082-7404	.11	4	5u	10m	Red	CC	ND	80m#	5m	47	2.0	10m	655n	ComCath	E124a	PY57
60	5082-7414	.11	4	5u	10m	Red	CC	NR	80m#	5m	47	2.0	10m	655n	C	E124a	PY57
61	HP5082-7404	.11	4	5.0u	10m△	Red	CC	ND	80m	5.0m	47	2.0	10m	655n		E124e	PY57 ☑
62	HP5082-7414	.11	4	5.0u	10m△	Red	CC	NR	80m	5.0m	47	2.0	10m	655n		E124f	PY57 ☑
63	DL340M	.11	4*	2.5m	5.0m△	Red	CC	NR	320m	20m*	27%	2.0	20m	660n	Multiplex Op	E144a	PY79 ☑
64	5082-7405	.11	5	5u	10m	Red	CC	ND	80m#	5m	47	2.0	10m	655n	ComCath	E146c	PY58
65	5082-7415	.11	5	5u	10m	Red	CC	NR	80m#	5m	47	2.0	10m	655n	C	E146c	PY58
66	HP5082-7405	.11	5	5.0u	10m△	Red	CC	ND	80m	5.0m	47	2.0	10m	655n		E146b	PY58 ☑
67	HP5082-7415	.11	5	5.0u	10m△	Red	CA	NR	80m	5.0m	47	2.0	10m	655n		E146e	PY58 ☑
68	NSA7120	.11	12	350u△	5.0m△	Red	CC	NR		70m	27	2.0	5.0m	660n		E2012b	PY617 ☑
69	NSA5120A	.11	12	450u△	7.0m	Red		NR		7.0m	27	2.0	5.0m	660n		2212a	PY108a
70	NSA5140A	.11	14	450u△	7.0m△	Red	CC	NR	9.1	7.0m	27	2.0	7.0m	660n		E2214b	PY108
71	5082-7446	.11	16	7u	5m	Red		NR	50m#	3.0m	28	1.5 †	5.0m	655n	C	E2416	PY476
72	HP5082-7446	.115	16	35u△	5.0m	Red	CC	NR	50m	3.0m	28	1.5 †	5.0m	655n	Calculator	E2416a	PY476 ☑
73	AL304A	.12	1		5.0m△	Red		NR	88m	5.5m	67	2.0	5.0m			None	PY436 ☑
74	AL304B	.12	1		5.0m△	Red		NR	88m	5.5m	67	2.0	5.0m			None	PY436 ☑
75	AL304G	.12	1		5.0m△	Red		NR	264m	11m	67	3.0	5.0m			None	PY436 ☑
76	AL304V	.12	1		10m△	Green		NR	264m	11m	67	3.0	10m			None	PY436 ☑
77	ALS311G	.12	4	80u	600u	Red		N		110m	15	2.0	4.0m	660n		None	PY157
78	ALS311B	.12	4	210u	600u	Red		N		110m	15	2.0	4.0m	660n		None	PY157
79	ALS311V	.12	5	80u	600u	Red		N		110m	15	2.0	4.0m	660n		None	PY157
80	ALS311A	.12	5	210u	600u	Red		N		110m	15	2.0	4.0m	660n		None	PY157
81	LT5140	.12	14	.45m	7.0m	Red	CC	NR		70m	27	2.0	7.0m	660n		E2214a	PY616
82	SEL520	.125	1	0.4m△	10m	Red		NB	350m	25m	27	3.0	10m	700n		None ♦	PY772
83	SEL521	.125	1	0.4m△	10m	Red		NB	350m	25m	27	3.0	10m	700n		None ♦	PY772
84	SEL620	.125	1	0.4m△	10m	Green		NB	350m	25m	27	3.0	10m	560n		None ♦	PY772
85	SEL621	.125	1	0.4m△	10m	Green		NB	350m	25m	27	3.0	10m	560n		None ♦	PY772
86	NSA1541A	.14	4	400u△	5.0m△	Red	CC	NR		70m	27	2.0	5.0m	660n		E178a	PY616a☑
87	NSA1588A	.14	8	400u△	5.0m△	Red	CC	NR		70m	27	2.0	5.0m	660n		E178a	PY616 ☑
88	NSA1605	.14	8	450u△	7.0m	Red	CC	AR		7.0m	27	2.0	5.0m	660n		E228a	PY1237
89	ALS330A	.145	3	.05m	3.0m			NDT		5.0m	25	1.8	3.0m			None	PY171a
90	ALS330B	.145	3	.05m	3.0m			NDT		5.0m	25	1.8	3.0m			None	PY171a
91	ALS330D	.145	3	.05m	3.0m			NDT		5.0m	25	1.8	3.0m			None	PY171a
92	ALS330E	.145	3	.05m	3.0m			NDT		5.0m	25	1.8	3.0m			None	PY171a
93	ALS330G	.145	3	.05m	3.0m			NDT		5.0m	25	1.8	3.0m			None	PY171a
94	ALS329I	.145	4	.05m	3m			NDT		5m	25	1.8	3.0m			None	PY58a
95	ALS329K	.145	4	.05m	3m			NDT		5m	25	1.8	3.0m			None	PY58a
96	ALS329S	.145	4	.05m	3m			NDT		5m	25	1.8	3.0m			None	PY58a
97	ALS328G	.145	5	.05m	3m			NDT		5m	25	1.8	3.0m			None	PY57a
98	ALS328V	.145	5	.05m	3m			NDT		5m	25	1.8	3m			None	PY57a
99	MLI80S	.15	.5	0.9m	20m	Red		FM	300m	70m	28	2.1	20m	660n		None	None
100	MLI80G	.15	.5	2.2m	20m	Green		FM	200m	50m	28	2.2	20m	565n		None	None
101	MLI80Y	.15	.5	2.2m	20m	Yellow		FM	200m	50m	28	2.2	20m	585n		None	None
102	DL440M	.15	2*	2.5m	5.0m△	Red	CC	NR	320m	20m*	27%	2.0	20m	660n	Multiplex Op	E122a	PY543 ☑
103	DL430M	.15	3*	2.5m	5.0m△	Red	CC	NR	320m	20m*	27%	2.0	20m	660n	Multiplex Op	E123c	PY542 ☑
104	LTM1416	.16	4	1.2m	40m	Red	INT		595m	100m	48	5.0	100m	655n	- w/Logic	E184f	PY1605
105	LTM2416	.16	4	1.2m	40m	Red	INT		595m	100m	48	5.0	100m	655n	- w/Logic	E184f	PY1604
106	5082-7285	.17	5	30u	10m	Red	OTHR	NR	125m#	7.m	27	2.0	10m	655n	C	E155a	PY363
107	5082-7295	.17	15	30u△	2m△	Red	CC	NR	125m△	7m	27	2.0	10m	655n		E2315a	PY364
108	HP5082-7285	.175	5	70u△	2.0m	Red	CC	NR	125m	7.0m	27	2.0	10m	655n	W/lens	E2315a	PY363 △
109	HP5082-7295	.175	15	90u△	2.0m	Red	CC	NR	125m	7.0m	27	2.3	30m	655n	W/lens	E2315a	PY364 △
110	KL105A	.20	1		70m	Orange		N		12m	68	6.0	10m			None	PY311

SYMBOLS AND CODES EXPLAINED IN INTERPRETER

35. LED CHARACTER DISPLAYS - Seven-Segment Numeric (Cont'd)

IN ORDER OF FONT AND: (1) CHAR. HEIGHT (2)NO. CHAR. (3) INTENSITY & (4) TYPE NO.

LINE No.	4 TYPE NUMBER	1 CHAR. HGHT (in)	2 NO. CHAR	3 LUMINOUS INTENSITY Iv MIN (cd)	IF TEST (A)	COLOR	CONN.	DISP NOMEN	PD RATED MAX (W)	IF RATED MAX (A)	TEMP RNGE CODE - +	FORWARD VOLTAGE VF MAX (V)	IF TEST (A)	PEAK WAVE-LENGTH λP (m)	FEATURES	DRAWINGS SCHE-MATIC	OUTLINE
1	KL105B	.20	1		80m	Yellow		N		12m	68	3.5	10m			None	PY311
2	KL105V	.20	1		80m	Yellow		N		12m	68	6.0	10m			None	PY311
3	ALS330I	.20	3	.05m	3.0m			NDT		5.0m	25	1.8	3.0m			None	PY171a
4	ALS330K	.20	3	.05m	3.0m			NDT		5.0m	25	1.8	3.0m			None	PY171a
5	ALS330S	.20	3	.05m	3.0m			NDT		5.0m	25	1.8	3.0m			None	PY171a
6	LTF121402A1	.20	14	2.0m	10m	Red		NB								2414a	PY1387
7	LTF216141A1	.20	16	35u	10m	Red		NR	2.0	30m	26	2.2	20m	655n		E2416b	PY1387
8	LTF216141A1P	.20	16	40u	10m	Red		NR	2.4	30m	26	2.8	20m	697n		E2416b	PY1387
9	SLA2	.225	1	1.0m	15m	Red	CA	P	500m	40m	5A	2.8	15m	690m		E141ac	None
10	D190PA	.235	2	150uΔ	10m	Red	CA	PR	300m	25m	48%	2.0	20m	660n	(+/-1.)	E101am	PY869 ☑
11	GL6P202	.235	2	150u	5.0m	Red	CC	N	175m	10m	37	2.5	5.0m	695n		E162k	PY412 ☑
12	GL6R202	.235	2	150u	20m	Red	CC	N	350m	25m	37	2.0	20m	655n		E162k	PY412 ☑
13	D190PK	.235	2	180uΔ	10m	Red	CC	PR	300m	25m	48%	2.0	20m	660n	(+/-1.)	E101an	PY869 ☑
14	D191PA	.235	2	450uΔ	10m	Orange	CA	PR	300m	17m	48%	3.0	20m	630n	(+/-1.)	E101am	PY869 ☑
15	D191PK	.235	2	450uΔ	10m	Orange	CC	PR	300m	17m	48%	3.0	20m	630n	(+/-1.)	E101an	PY869 ☑
16	D192PA	.235	2	450uΔ	10m	Green	CA	PR	300m	17m	48%	3.0	20m	560n	(+/-1.)	E101am	PY869 ☑
17	D192PK	.235	2	450uΔ	10m	Green	CC	PR	300m	17m	48%	3.0	20m	560n	(+/-1.)	E101an	PY869 ☑
18	D193PA	.235	2	450uΔ	10m	Yellow	CA	PR	300m	17m	48%	3.0	20m	590n	(+/-1.)	E101am	PY869 ☑
19	D193PK	.235	2	450uΔ	10m	Yellow	CC	PR	300m	17m	48%	3.0	20m	590n	(+/-1.)	E101an	PY869 ☑
20	SL1173-03	.24	1	240u	5.0m	Red		PV	100m	15m	26	1.9 †	5.0m	700n		E061a	PY1477
21	SL1174-03	.24	1	240u	5.0m	Red		PV	100m	15m	26	1.9 †	5.0m	700n		E061b	PY1477
22	SL2173	.24	1	370m		Green		PV	100m	20m	27	2.0 †	15m	565u		E061a	PY1477
23	SL2174	.24	1	370m		Green		PV	100m	20m	27	2.0 †	15m	565u		E061b	PY1477
24	SL1032	.24	4	150u	5.0m	Red		NRKC	1.0	15m	26	1.9 †	5.0m	700n		None	PY1493
25	SL1405	.24	4	150u	5.0m	Red		NBKC	900m	15m	26	1.9 †	5.0m	700n		None	PY1488
26	SL1405-20	.24	4	150u	5.0m	Red		NRKC	1.0	15m	26	1.9 †	5.0m	700n		None	PY1489
27	SL1406-20	.24	4	150u	5.0m	Red		NRKC	1.0	15m	26	1.9 †	5.0m	700n		None	PY1489
28	SL1495(2)	.24	4	150u	5.0m	Red		NRKC	900m	15m	26	1.9 †	5.0m	700n		None	PY1492
29	SL1496	.24	4	150u	5.0m	Red		NRKC	900m	15m	26	1.9 †	5.0m	700n		None	PY1492
30	LTC2602R	.24	4	200u	10m	Red	CA	NRK	45m	20m	28	2.0	20m	655n	Multiplexed	E244j	PY1451
31	LTC2702R	.24	4	200u	10m	Red	CA	NRK	45m	20m	28	2.0	20m	655n	Multiplexed	E244k	PY1451
32	SL2032	.24	4	200u	15m	Green		NRKC	1.4	20m	26	2.0 †	15m	565n		None	PY1493
33	SL2405	.24	4	200u	15m	Green		NBKC	1.3	20m	26	2.0 †	15m	565n		None	PY1488
34	SL2405-20	.24	4	200u	15m	Green		NRKC	1.4	20m	26	2.0 †	15m	565n		None	PY1489
35	SL2406-20	.24	4	200u	15m	Green		NRKC	1.4	20m	26	2.0 †	15m	565n		None	PY1489
36	SL2495	.24	4	200u	15m	Green		NRKC	1.2	20m	26	2.0 †	15m	565n		None	PY1492
37	SL2496	.24	4	200u	15m	Green		NRKC	1.2	20m	26	2.0 †	15m	565n		None	PY1492
38	LTC2602P	.24	4	250u	10m	Red	CA	NRK	30m	12m	28	2.8	20m	700n	Multiplexed	E244j	PY1451
39	LTC2702P	.24	4	250u	10m	Red	CA	NRK	30m	12m	28	2.8	20m	700n	Multiplexed	E244k	PY1451
40	LTC2301Y	.24	4	600u	10m	Yellow		NR	50m	16m	28	2.8	20m	585n		E364e	PY1451
41	LTC2602Y	.24	4	600u	10m	Yellow	CA	NRK	50m	16m	28	2.8	20m	585n	Multiplexed	E244j	PY1451
42	LTC2702Y	.24	4	600u	10m	Yellow	CA	NRK	50m	16m	28	2.8	20m	585n	Multiplexed	E244k	PY1451
43	LTC2801Y	.24	4	600u	10m	Yellow		NR	50m	16m	28	2.8	20m	585n		E364f	PY1451
44	LTC2301E	.24	4	750u	10m	Orange		NR	60m	20m	28	2.8	20m	630n		E364e	PY1451
45	LTC2301HR	.24	4	750u	10m	Red		NR	60m	20m	28	2.8	20m	635n		E364e	PY1451
46	LTC2602E	.24	4	750u	10m	Orange	CA	NRK	60m	20m	28	2.8	20m	630n	Multiplexed	E244j	PY1451
47	LTC2602G	.24	4	750u	10m	Green	CA	NRK	60m	20m	28	2.8	20m	565n	Multiplexed	E244j	PY1451
48	LTC2602HR	.24	4	750u	10m	Red	CA	NRK	60m	20m	28	2.8	20m	635n	Multiplexed	E244j	PY1451
49	LTC2702E	.24	4	750u	10m	Orange	CA	NRK	60m	20m	28	2.8	20m	630n	Multiplexed	E244k	PY1451
50	LTC2702G	.24	4	750u	10m	Green	CA	NRK	60m	20m	28	2.8	20m	565n	Multiplexed	E244k	PY1451
51	LTC2702HR	.24	4	750u	10m	Red	CA	NRK	60m	20m	28	2.8	20m	635n	Multiplexed	E244k	PY1451
52	LTC2801E	.24	4	750u	10m	Orange		NR	60m	20m	28	2.8	20m	630n		E364f	PY1451
53	LTC2801HR	.24	4	750u	10m	Red		NR	60m	20m	28	2.8	20m	635n		E364f	PY1451
54	SL1514	.24	5	100u	5.0m	Red		NRK	1.3	15m	26	1.9 †	5.0m	700n		None	PY1498
55	SL1552	.24	5	100u	5.0m	Red		NRK	1.3	15m	26	1.9 †	5.0m	700n		None	PY1497
56	SL1582	.24	5	100u	5.0m	Red		NR	1.3	15m	26	1.9 †	5.0m	700n		None	PY1499
57	SL2514	.24	5	200u	15m	Green		NRK	1.7	20m	26	2.0 †	15m	565n		None	PY1498
58	SL2552	.24	5	200u	15m	Green		NRK	1.7	20m	26	2.0 †	15m	565n		None	PY1497
59	SL2582	.24	5	200u	15m	Green		NR	1.7	20m	26	2.0 †	15m	565n		None	PY1499
60	SL1612F	.24	7	100u	5.0m	Red		NR	900m	15m	26	1.9 †	5.0m	700n		None	PY1500
61	SL2612F	.24	7	200u	15m	Green		NR	1.0	20m	26	2.0 †	15m	565n		None	PY1500
62	SL1752	.24	9	100u	5.0m	Red		NR	1.3	15m	26	1.9 †	5.0m	700n		None	PY1501
63	SL2752	.24	9	200u	15m	Green		NR	1.7	20m	26	2.0 †	15m	565n		None	PY1501
64	GL6N202	.25	2	500u	10m	Green	CC	NR		15m	37	2.5	10m	565		E162k	PY412
65	TLR2130	.25	4	50u	40m	Red	OTHR	NC		15m	37	3.0	40m	700n		E244b	PY671 ☑
66	TLR2140	.25	4	50u	40m	Red	OTHR	NC		15m	37	3.0	40m	700n		E244d	PY671 ☑
67	TLR4135	.25	4	50u	40m	Red	OTHR	NC		15m	37	3.0	40m	700n		E244a	PY671 ☑
68	TLR4145	.25	4	50u	40m	Red	OTHR	NC		15m	37	3.0	40m	700n		E244c	PY671 ☑
69	AND4135G	.25	4	60u	40m	Green	OTHR	NB		60m	37	3.0	40m	565n		E244a	PY671 ☑
70	AND4135R	.25	4	60u	40m	Red	OTHR	NB		60m	37	3.0	40m	700n		E244a	PY671 ☑
71	AND4145G	.25	4	60u	40m	Green	OTHR	NB		60m	37	3.0	40m	565n		E244b	PY671 ☑
72	AND4145R	.25	4	60u	40m	Red	OTHR	NB		60m	37	3.0	40m	700n		E244b	PY671 ☑
73	TLG2130	.25	4	60u	40m	Green	OTHR	NC		15m	37	3.0	40m	565n		E244b	PY671 ☑
74	TLG2140	.25	4	60u	40m	Green	OTHR	NC		15m	37	3.0	40m	565n		E244d	PY671 ☑
75	TLG4135	.25	4	60u	40m	Green	OTHR	NC		15m	37	3.0	40m	565n		E244a	PY671 ☑
76	TLG4145	.25	4	60u	40m	Green	OTHR	NC		15m	37	3.0	40m	565n		E244c	PY671 ☑
77	GPD920	.26	1	500u	50m	Yellow		N	1.3	18m	49	7.0	50m	582n		081zy	PY1334
78	GPD970	.26	1	800u	50m	Red		N	1.3	18m	49	6.5	50m	630n		081zy	PY1334
79	GPD940	.26	1	2.1m	50m	Green		N	1.3	18m	49	5.5	50m	568n		081zy	PY1334
80	HD1076G	.27	.5	260u	5.0mΔ	Green	CA	NR	40mΔ	15m	48%	2.4	5.0m	560n	(+/-1.)	E101am	PY869 *
81	HD1076O	.27	.5	260u	5.0mΔ	Orange	CA	NR	40mΔ	15m	48%	2.4	5.0m	645n	(+/-1.)	E101am	PY869 *
82	HD1078G	.27	.5	260u	5.0mΔ	Green	CC	NR	40mΔ	15m	48%	2.4	5.0m	560n	(+/-1.)	E101an	PY869 *
83	HD1078O	.27	.5	260u	5.0mΔ	Orange	CC	NR	40mΔ	15m	48%	2.4	5.0m	645n	(+/-1.)	E101an	PY869 *
84	HD1076R	.27	.5	800u	20mΔ	Red	CA	NR	40mΔ	20m	48%	2.0	10m	665n	(+/-1.)	E101am	PY869 *
85	HD1078R	.27	.5	800u	20mΔ	Red	CC	NR	40mΔ	20m	48%	2.0	10m	665n	(+/-1.)	E101an	PY869 *
86	HD1078Y	.27	.5	900u	15mΔ	Yellow	CC	NR	40mΔ	15m	48%	2.4	5.0m	590n	(+/-1.)	E101an	PY869 *
87	MAN1A	.27	1		20m	Red		NL		20m		4.0	20m	660n		None	PY67 ☑
88	MAN10A	.27	1		10m	Red		NL		10m		4.0	10m	660n		None	PY67 ☑
89	MAN101A	.27	1		10m	Red		PV	280m	10m		4.0	10m	660n		None	PY67a ☑
90	MAN1001A	.27	1		20m	Red		PV	560m	20m		4.0	20m	660n		None	PY67a ☑
91	4N41	.27	1	200uΔ	20m	Red	CA	NL		30m	5A	3.8	20m	660n		E141g	PY60g
92	TIL302	.27	1	275u	20m	Red	OTHR	NL		200m	07*	3.8	20m	660n	Spectral BW 20nm	E141g	PY60h ☑
93	TIL302A	.27	1	275u	20m	Red	OTHR	NL		200m	07*	3.8	20m	660n	Spectral BW 20nm	E141g	PY60h ☑
94	TIL303	.27	1	275u	20m	Red	OTHR	NR		200m	07*	3.8	20m	660n	Spectral BW 20nm	None ♦	PY60h ☑
95	TIL303A	.27	1	275u	20m	Red	OTHR	NR		200m	07*	3.8	20m	660n	Spectral BW 20nm	None ♦	PY60h ☑
96	TIL304	.27	2	275u	20m	Red	OTHR	PV		200m	07*	3.8	20m	660n	Spectral BW 20nm	E141ba	PY60h ☑
97	TIL304A	.27	2	275u	20m	Red	OTHR	PV		200m	07*	3.8	20m	660n	Spectral BW 20nm	E141ba	PY60h ☑
98	AL309K	.275	1	50uΔ	20m	Red		NR	352m	22m	17	2.0	20m			None	PY437 ☑
99	AL309B	.275	1	100uΔ	20m	Red		NR	352m	22m	17	2.0	20m			None	PY437 ☑
100	AL309E	.275	1	100uΔ	20m	Red		NR	352m	22m	17	2.5	20m			None	PY437 ☑
101	AL309I	.275	1	100uΔ	20m	Red		NR	352m	22m	17	2.0	20m			None	PY437 ☑
102	AL309A	.275	1	150uΔ	20m	Red		NR	352m	22m	17	2.0	20m			None	PY437 ☑
103	AL309D	.275	1	150uΔ	20m	Red		NR	352m	22m	17	2.5	20m			None	PY437 ☑
104	AL309SZ	.275	1	150uΔ	20m	Red		NR	352m	22m	17	2.0	20m			None	PY437 ☑
105	AL309G	.275	1	300uΔ	20m	Red		NR	352m	22m	17	2.5	20m			None	PY437 ☑
106	AL309V	.275	1	300uΔ	20m	Red		NR	352m	22m	17	2.0	20m			None	PY437 ☑
107	HD1075G	.275	1	1.0m	15mΔ	Green	CA	NR	40mΔ	15m	48%	2.4	5.0m	560n		E101ak	PY869 *
108	HD1077G	.275	1	1.0m	15mΔ	Green	CC	NR	40mΔ	15m	48%	2.4	5.0m	560n		E101al	PY869 *
109	ALS321A	.28	1	.12m	20m			NDT	720m	25m	67	3.6	20m			None	PY1109
110	ALS321B	.28	1	.12m	20m			NDT	720m	25m	67	3.6	20m			None	PY64s

SYMBOLS AND CODES EXPLAINED IN INTERPRETER

35. LED CHARACTER DISPLAYS - Seven-Segment Numeric (Cont'd)

IN ORDER OF FONT AND: (1) CHAR. HEIGHT (2)NO. CHAR. (3) INTENSITY & (4) TYPE NO.

LINE No.	4 TYPE NUMBER	1 CHAR. HGHT (in)	2 NO. CHAR	3 LUMINOUS INTENSITY Iv MIN (cd)	IF TEST (A)	COLOR	CONN.	DISP NOMEN	PD RATED MAX (W)	IF RATED MAX (A)	TEMP RNGE CODE - +	FORWARD VOLTAGE VF MAX (V)	IF TEST (A)	PEAK WAVE-LENGTH λP (m)	FEATURES	DRAWINGS SCHE-MATIC	OUTLINE
1	D100PA	.28	1	180u△	10m	Red	CA	NR	400m	25m*	48%	2.0	20m	660n		E101ak	PY869 ☑
2	D100PK	.28	1	180u△	10m	Red	CC	NR	400m	25m	48%	2.0	20m	660n		E101al	PY869 ☑
3	TDSL1150	.28	1	180u△	2.0m	Red	CA	NR	320m	15m	48%	3.0	20m	660n		E101ak	PY869 ☑
4	TDSL1160	.28	1	180u△	2.0m	Red	CC	NR	320m	15m	48%	3.0	20m	660n		E101ak	PY869 ☑
5	TDSL3150	.28	1	180u△	2.0m	Red	CA	NR	320m	15m	48%	3.0	20m	660n		E101ao	PY870 ☑
6	TDSL3160	.28	1	180u△	2.0m	Red	CC	NR	320m	15m	48%	3.0	20m	660n		E101ao	PY870 ☑
7	TDSL5160	.28	1	280u△	2.0m	Red	CC	NR	320m	15m	48%	3.0	20m	660n		E101j	PY977 ☑
8	D101PA	.28	1	450u△	10m	Orange	CA	NR	400m	17m	48%	3.0	20m	630n		E101ak	PY869 ☑
9	D101PK	.28	1	450u△	10m	Orange	CC	NR	400m	17m	48%	3.0	20m	630n		E101al	PY869 ☑
10	D102PA	.28	1	450u△	10m	Green	CA	NR	400m	17m	48%	3.0	20m	560n		E101ak	PY869 ☑
11	D102PK	.28	1	450u△	10m	Green	CC	NR	400m	17m	48%	3.0	20m	560n		E101al	PY869 ☑
12	D103PA	.28	1	450u△	10m	Yellow	CA	NR	400m	17m	48%	3.0	20m	590n		E101ak	PY869 ☑
13	D103PK	.28	1	450u△	10m	Yellow	CC	NR	400m	17m	48%	3.0	20m	590n		E101al	PY869 ☑
14	LAA3310	.28	1	600u△	10m△	Red		NV	110m	20m	48	1.6 †	10m	655n	(+/-.1)	E141cm	PY1430
15	LAAC3310	.28	1	600u△	10m△	Red	CA	NV	110m	20m	48	1.6 †	10m	655n	(+/-.1)	E141f	PY1431
16	HD1075R	.28	1	800u△	20m△	Red	CA	NR	40m△	20m	48%	2.0	10m	665n	Tr/Tf 5ns Typ	E101ak	PY869 ☑
17	HD1077R	.28	1	800u△	20m△	Red	CC	NR	40m△	20m	48%	2.0	10m	665n	Tr/Tf 5ns Typ	E101al	PY869 ☑
18	HD1075O	.28	1	1.0m△	15m△	Orange	CA	NR	40m△	15m	48%	2.4	5.0m	645n	Tr/Tf 100ns Typ	E101ak	PY869 ☑
19	HD1077O	.28	1	1.0m△	15m△	Orange	CC	NR	40m△	15m	48%	2.4	5.0m	645n	Tr/Tf 100ns Typ	E101al	PY869 ☑
20	HG1075G	.28	1	1.0m△	15m△	Green	CA	NR	40m△	15m	48%	2.4	5.0m	560n	Tr/Tf 50ns Typ	E101ak	PY869 ☑
21	HG1077G	.28	1	1.0m△	15m△	Green	CC	NR	40m△	15m	48%	2.4	5.0m	560n	Tr/Tf 50ns Typ	E101ak	PY869 ☑
22	LAA3313	.28	1	2.4m△	10m△	Yellow		NV	115m	20m	48	2.0 †	10m	585n	(+/-.1)	E141cm	PY1430
23	LAAC3313	.28	1	2.4m△	10m△	Yellow	CA	NV	115m	20m	48	2.0 †	10m	585n	(+/-.1)	E141f	PY1431
24	LAA3312	.28	1	3.1m△	10m△	Green		NV	115m	20m	48	2.0 †	10m	565n	(+/-.1)	E141cm	PY1430
25	LAAC3312	.28	1	3.1m△	10m△	Green	CA	NV	115m	20m	48	2.0 †	10m	565n	(+/-.1)	E141f	PY1431
26	LAA3311	.28	1	3.4m△	10m△	Red		NV	120m	20m	48	1.9 †	10m	695n	(+/-.1)	E141cm	PY1430
27	LAA3314	.28	1	3.4m△	10m△	Orange		NV	115m	20m	48	2.0 †	10m	635n	(+/-.1)	E141cm	PY1430
28	LAAC3311	.28	1	3.4m△	10m△	Red	CA	NV	120m	20m	48	1.9 †	10m	695n	(+/-.1)	E141f	PY1431
29	LAAC3314	.28	1	3.4m△	10m△	Orange	CA	NV	115m	20m	48	2.0 †	10m	635n	(+/-.1)	E141f	PY1431
30	HD1075Y	.28	1	900m△	15m△	Yellow	CA	NR	40m△	15m	48%	2.4	5.0m	590n	Tr/Tf 100ns Typ	E101ak	PY869 ☑
31	HD1077Y	.28	1	900m△	15m△	Yellow	CC	NR	40m△	15m	48%	2.4	5.0m	590n	Tr/Tf 100ns Typ	E101al	PY869 ☑
32	LTG314A	.29	.5	.14m	10m	Green	CA	NRP	200m	20m	27	2.5	10m	565n	(+/-1.)	E101ax	PY893 ☑
33	HP5082-7626	.29	.5	200u△	5.0m	Yellow	CA	PRV	81m	20m	48	2.5	20m	583n	(+/-1.); univ	E141as	PY60d ☑
34	MAN3930A	.29	.5	320u	10m	Red	UNIV	NV	375m	150m	48	2.5	20m	635n		E141az	PY81b
35	HP5082-7616	.29	.5	330u△	5.0m	Red	CA	PRV	81m	20m	48	2.5	20m	635n	(+/-1.); univ	E141as	PY60d ☑
36	HP5082-7736	.29	.5	400u△	20m	Red	CA	PRV	65m	25m	48	2.0	20m	655n	(+/-1.); univ	E141as	PY60d ☑
37	HDSP5607	.29	.5	1.5m	10m	Green	OTHR	V	105m△	30m	48	2.5	10m	566n	(+/-1.)	E101ai	PY506
38	LTR314	.29	1	.11m	5.0m	Red	CA	NRP	170m	15m	27	2.4	15m	700n		E101ax	PY893 ☑
39	LTR315	.29	1	.11m	5.0m	Red	CC	NRP	170m	15m	27	2.4	15m	700n		E101ay	PY893 ☑
40	LTG315A	.29	1	.14m	10m	Green	CC	NRP	200m	20m	27	2.5	10m	565n		E101ay	PY893 ☑
41	HDSP3536	.29	1	1.5m△	100m	Red	CA	PV	105m△	40m	48	3.5	100m	635n		E141as	PY60d ☑
42	HDSP4036	.29	1	1.5m△	100m	Yellow	CA	PV	105m△	40m	48	3.5	100m	583n		E141as	PY60d ☑
43	HDSP5608	.29	1	1.5m	10m	Green	OTHR	V	105m△	30m	48	2.5	10m	566n		E101aj	PY506
44	LN543YA	.29	4	80u	10m	Orange	CA	NR	30m	10m	38%	2.8	10m	590n		E244e	PY685
45	LN543YAH	.29	4	80u	10m	Orange	CC	NR	30m	10m	38%	2.8	10m	590n		E244g	PY684
46	LN543YK	.29	4	80u	10m	Orange	CA	NR	30m	10m	38%	2.8	10m	590n		E244e	PY685
47	LN543YKH	.29	4	80u	10m	Orange	CC	NR	30m	10m	38%	2.8	10m	590n		E244g	PY684
48	LN543GA	.29	4	150u	10m	Green	CA	NR	30m	10m	38%	2.8	10m	560n		E244e	PY685
49	LN543GAH	.29	4	150u	10m	Green	CC	NR	30m	10m	38%	2.8	10m	560n		E244g	PY684
50	LN543GK	.29	4	150u	10m	Green	CA	NR	30m	10m	38%	2.8	10m	560n		E244e	PY685
51	LN543GKH	.29	4	150u	10m	Green	CC	NR	30m	10m	38%	2.8	10m	560n		E244g	PY684
52	LN543RA	.29	4	180u	5.0m	Red	CA	NR	30m	10m	38%	2.8	10m	700n		E244e	PY685
53	LN543RAH	.29	4	180u	5.0m	Red	CC	NR	30m	10m	38%	2.8	10m	700n		E244g	PY684
54	LN543RK	.29	4	180u	5.0m	Red	CA	NR	30m	10m	38%	2.8	10m	700n		E244e	PY685
55	LN543RKH	.29	4	180u	5.0m	Red	CC	NR	30m	10m	38%	2.8	10m	700n		E244g	PY684
56	SL1064-20	.29	4	180u	5.0m	Red		NBKC	1.2	15m	27	1.9 †	5.0m	700n		None	PY1494
57	LN5430A	.29	4	200u	10m	Orange	CA	NR	30m	10m	27	2.0 †	10m	630n		E244e	PY685
58	LN5430A.H	.29	4	200u	10m	Orange	CC	NR	30m	10m	27	2.0 †	10m	630n		E244g	PY684
59	LN5430K	.29	4	200u	10m	Orange	CA	NR	30m	10m	27	2.0 †	10m	630n		E244e	PY685
60	LN5430K.H	.29	4	200u	10m	Orange	CC	NR	30m	10m	27	2.0 †	10m	630n		E244g	PY684
61	SL2064-20K	.29	4	240u	15m	Green		NBKC	1.7	20m	27	2.0 †	15m	565n		None	PY1494
62	MAN53A	.295	.5	125u△	10m	Green	UNIV	PV	250m	100m	48	3.5	20m	565n		E141az	PY81b ☑
63	MAN73A	.295	.5	125u△	10m	Red	UNIV	PV	350m	150m	48	2.0	20m	660n		E141az	PY81b ☑
64	MAN83A	.295	.5	320u△	10m	Yellow	UNIV	PV	250m	100m	48	3.5	20m	585n		E141az	PY81b ☑
65	MAN3630A	.295	.5	510u	10m	Orange	UNIV	PV	250m	100m	48	2.5	20m	630n		E141az	PY81b ☑
66	TLR314	.295	1	110u	5.0m	Red	CA	NR	170m	15m	27	2.4	15m	700n		E101g	PY169 ☑
67	TLR315	.295	1	110u	5.0m	Red	CA	NR	170m	15m	27	2.4	15m	700n		E101f	PY169 ☑
68	TLR332	.30	.5		10m	Red	CC	NR		20m	27	2.5	10m	700n		E101a	PY29j
69	GL8G03	.30	.5	30u	10m	Green	CC	N	300m	15m	37	2.5	10m	555n		E101a	PY176f
70	GL8P03	.30	.5	60u	5.0m	Red	CC	N	200m	10m	37	2.5	5.0m	695n		E101a	PY176f
71	GL8R03	.30	.5	60u	20m	Red	CC	N	400m	25m	37	2.0	20m	655n		E101a	PY176f
72	CMN58A	.30	.5	125u	10m	Green	CC	NR	480m	20m	48	3.0	20m			E101a	PY544b
73	CMN73A	.30	.5	125u	10m	Red	UNIV	NP	300m	30m	48	2.0	20m			E141az	PY1337a
74	CMN78A	.30	.5	125u	10m	Red	CC	NR	480m	30m	48	2.0	20m			E101a	PY544b
75	MAN78A	.30	.5	125u	10m	Red	CC	NRC	480m	240m	48	2.0	20m	660n		E101a	PY809b*
76	5082-7740	.30	.5	200u	100m	Red	CC	NR		150m	48	2.0	20m	655n		E101a	PY635b☑
77	LTS313AR	.30	.5	200u	10m	Red	CC	NR	55m	25m	28	2.0	20m	655n		E101a	PY1337c
78	GL8R03D	.30	.5	250u	20m	Red	CC	NR		25m	37	2.0	20m	655		E101a	PY176f
79	GL8P03D	.30	.5	300u	5.0m	Red	CC	NR		10m	37	2.5	5.0m	695		E101a	PY176f
80	LTS313AP	.30	.5	300u	10m	Red	CC	NR	40m	15m	28	2.8	20m	697n		E101a	PY1337c
81	MG131AF	.30	.5	300u	10m	Green	CA	PLV	300m	20m	27	2.2	10m	565n	(+/-.1)	E101af	PY787a
82	MG131C	.30	.5	300u	10m	Green	CC	NR	300m	20m	27	2.2	10m	565n		E101a	PY787
83	MG131CF	.30	.5	300u	10m	Green	CC	PLV	300m	20m	27	2.2	10m	565n	(+/-.1)	E101ag	PY787a
84	MY131AF	.30	.5	300u	10m	Yellow	CA	PLV	300m	20m	27	2.2	20m	585n	(+/-.1)	E101af	PY787a
85	MY131C1	.30	.5	300u	10m	Yellow	CC	NR	300m	20m	27	2.2	20m	585n		E101a	PY787
86	MY131CF	.30	.5	300u	10m	Yellow	CC	PLV	300m	20m	27	2.2	20m	585n	(+/-.1)	E101ag	PY787a
87	CMN3930A	.30	.5	320u		Red	UNIV	NP	375m	30m	48	2.5	20m			E141az	PY1339
88	CMN3980A	.30	.5	320u	10m	Red	CC	NR	600m	30m	48	2.5	20m			E101a	PY544b
89	MAN3830A	.30	.5	320u	10m	Yellow	UNIV	P	375m	25m	48	3.0	20m	585n		E141az	PY809d
90	MAN3880A	.30	.5	320u	10m	Yellow	CC	NR	600m	25m	48	3.0	20m	585n		E101a	PY809b
91	MAN3980A	.30	.5	320u	10m	Red	CC	NR	600m	240m	48	2.5	20m	635n		E101a	PY81c
92	AND3005GAL	.30	.5	0.4m	20m	Green	OTHR	FV		25m	28	2.5	10m	555n		E141b	PY568a
93	AND3005GCL	.30	.5	0.4m	20m	Green	OTHR	FV		25m	28	2.5	10m	555n		E141b	PY568a
94	HP5082-7623	.30	.5	400u△	5.0m	Yellow	CC	NR	81m△	20m	48	2.5	20m	583n		E101a	PY61a ☑
95	TLG332	.30	.5	0.4m△	10m△	Green	CC	NR		20.m	27	2.5	10m	565n		E101a	PY29j
96	HDSP7303	.30	.5	450u	20m	Red	CC	NR	73m△	25m	48	2.0	20m	655n	ComCath	E101a	PY1205C
97	HDSP7313	.30	.5	450u	20m△	Red	CC	NR	73m△	25m	48	2.0	20m	655n		E101a	PY1205C
98	GL8N03D	.30	.5	500u	10m	Green	CC	NR		15m	37	2.5	10m	565		E101a	PY176f
99	CMN3680A	.30	.5	510u	10m	Orange	CC	NR	600m	25m	48	2.5	20m			E101a	PY544b
100	MAN3430A	.30	.5	510u	10m	Green	UNIV	P	300m	20m	48	3.0	20m	562n		E141az	PY809d
101	MAN3480A	.30	.5	510u	10m	Green	CC	NR	600m	30m	48	3.0	20m	562n		E101a	PY809b
102	MAN3680A	.30	.5	510u	10m	Orange	CC	NRC	600m	200m	48	2.5	20m	630n		E101a	PY809b*
103	HP5082-7613	.30	.5	550u△	5.0m	Red	CC	NR	81m△	20m	48	2.5	20m	635n		E101a	PY61a ☑
104	AND3005HAL	.30	.5	0.6m	20m	Red	OTHR	FV		25m	28	2.0	20m	655n		E141b	PY568a
105	AND3005HCL	.30	.5	0.6m	20m	Red	OTHR	FV		25m	28	2.0	20m	655n		E141b	PY568a
106	AND3005RAL	.30	.5	0.6m	20m	Red	OTHR	FV		25m	28	2.0	20m	655n		E141b	PY568a
107	AND3005RCL	.30	.5	0.6m	20m	Red	OTHR	FV		25m	28	2.0	20m	655n		E141b	PY568a
108	GL8D03D	.30	.5	600u	10m	Red	CC	NR		20m	37	2.2	10m	635		E101a	PY176f
109	LTS313AY	.30	.5	600u	10m	Yellow	CC	NR	60m	20m	28	2.8	20m	585n		E101a	PY1337c
110	LTS314R	.30	.5	600u	20m	Red	OTHR	NVR								E141b	PY1359

SYMBOLS AND CODES EXPLAINED IN INTERPRETER

35. LED CHARACTER DISPLAYS - Seven-Segment Numeric (Cont'd)

IN ORDER OF FONT AND: (1) CHAR. HEIGHT (2)NO. CHAR. (3) INTENSITY & (4) TYPE NO.

LINE No.	4 TYPE NUMBER	1 CHAR. HGHT (in)	2 NO. CHAR	3 LUMINOUS INTENSITY Iv MIN (cd)	IF TEST (A)	COLOR	CONN.	DISP NOMEN	PD RATED MAX (W)	IF RATED MAX (A)	TEMP RNGE CODE - +	FORWARD VOLTAGE VF MAX (V)	IF TEST (A)	PEAK WAVE-LENGTH λP (m)	FEATURES	DRAWINGS SCHE-MATIC	OUTLINE
1	MS131AF	.30	.5	600u	10m	Red	CA	PLV	300m	20m	27	2.2	10m	635n	(+/-.1);CA	E101af	PY787a
2	MS131CF	.30	.5	600u	10m	Red	CC	PLV	300m	20m	27	2.2	10m	635n	(+/-.1);CC	E101ag	PY787a
3	AND3005OAL	.30	.5	0.7m	20m	Orange	OTHR	FV		25m	28	2.5	10m	635n		E141b	PY568a
4	AND3005OCL	.30	.5	0.7m	20m	Orange	OTHR	FV		25m	28	2.5	10m	635n		E141b	PY568a
5	AND3005YAL	.30	.5	0.7m	20m	Yellow	OTHR	FV		25m	28	2.5	10m	585n		E141b	PY568a
6	AND3005YCL	.30	.5	0.7m	20m	Yellow	OTHR	FV		25m	28	2.5	10m	585n		E141b	PY568a
7	HP5082-7740	.30	.5	700u△	20m	Red	CC	NR	65m△	25m	48	2.0	20m	655n		E101a	PY61a ☑
8	LTS313AE	.30	.5	750u	10m	Orange	CC	NR	75m	25m	28	2.8	20m	630n		E101a	PY1337c
9	LTS313AG	.30	.5	750u	10m	Green	CC	NR	75m	25m	28	2.8	20m	565n		E101a	PY1337c
10	LTS313AHR	.30	.5	750u	10m	Red	CC	NR	75m	25m	28	2.8	20m	635n		E101a	PY1337c
11	MY131C	.30	.5	800u	20m	Yellow	CC	NR				3.0	20m	585n		E101a	PY787
12	HDSP3603	.30	.5	1.1m	10m	Green	CC	NR	105m△	30m	48	2.5	10m	566n		E101a	PY61
13	HDSP7803	.30	.5	1.3m△	10m△	Green	CC	NR	105m△	30m	48	2.5	10m	566n	ComK	E101a	PY1205C
14	HDSP3533	.30	.5	1.5m△	100m	Red	CC	NR	105m△	40m	48	3.5	100m	635n		E101a	PY61 ☑
15	HDSP4033	.30	.5	1.5m△	100m	Yellow	CC	NR	105m△	40m	48	3.5	100m	583n		E101a	PY61 ☑
16	LTS314Y	.30	.5	2.5m	20m	Yellow	OTHR	NVR								E141b	PY1359
17	HDSP7403	.30	.5	2.7m△	20m△	Yellow	CC	NR	81m△	20m	48	2.5	20m	583n		E101a	PY1205C
18	LTS314G	.30	.5	3.0m	20m	Green	OTHR	NVR								E141b	PY1359
19	LTS314E	.30	.5	3.5m	20m	Orange	OTHR	NVR								E141b	PY1359
20	LTS314HR	.30	.5	3.5m	20m	Red	OTHR	NVR								E141b	PY1359
21	HDSP7503	.30	.5	3.6m△	20m△	Red	CC	NRK	73m△	30m	48	2.5	20m	635n		E101a	PY1205C
22	TLR333	.30	1		10m	Red	CA	NR		20m	27	2.5	10m	700n		E141m	PY29j
23	TLR334	.30	1		10m	Red	CA	NRV		20m	27	2.5	10m	700n		E141as	PY29j
24	TLR335	.30	1		10m	Red	CA	NL		20m	27	2.5	10m	700n		E141m	PY29j
25	CMN72A	.30	1	125u	10m	Red	CA	NL	480m	30m	48	2.0	20m			E141m	PY1337
26	CMN74A	.30	1	125u	10m	Red	CC	NR	480m	30m	48	2.0	20m			E141o	PY1337b
27	MAN51A	.30	1	125u△	10m	Green	CA	NR	400m	160m	48	3.5	20m	565n		E141n	PY81a ☑
28	MAN52A	.30	1	125u△	10m	Green	CA	NL	400m	160m	48	3.5	20m	565n		E141m	PY81 ☑
29	MAN54A	.30	1	125u△	10m	Green	CC	NR	400m	160m	48	3.5	20m	565n		E141o	PY81c ☑
30	MAN71A	.30	1	125u△	10m	Red	CA	NR	700m	240m	48	2.0	20m	660n		E141n	PY81a ☑
31	MAN72A	.30	1	125u△	10m	Red	CA	NL	700m	240m	48	2.0	20m	660n		E141m	PY81 ☑
32	MAN74A	.30	1	125u△	10m	Red	CC	NR	700m	240m	48	2.0	20m	660n		E141o	PY81c ☑
33	A300(3)	.30	1	150u	10m	Red		PR								E141ai	PY29h
34	ALS324A	.30	1	.15m	20m			NDT	800m	2.3m	67	2.5	20m			None	PY1109
35	ALS324B	.30	1	.15m	20m			NDT	800m	2.5m	67	2.5	20m			None	PY1109
36	ALS338A	.30	1	.15m	20m			NDT	700m	25m	67	3.5	20m			None	PY64s
37	ALS338B	.30	1	.15m	20m			NDT	700m	25m	67	3.5	20m			None	PY64s
38	C31	.30	1	150u	10m	Red	OTHR	NR								E141e	PY29
39	C3011-11	.30	1	150u	10m	Red	OTHR	NR								E141e	PY29
40	S3011-11	.30	1	150u	10m	Red		PR							Univ +/- 1	E141as	PY29h
41	HDSP7511	.30	1	160u△	2m△	Red	CC	NR	52m△	15m	48	2.5	20m	635n		E101p	PY1205
42	HDSP7513	.30	1	160u△	2m△	Red	CA	NR	52m△	15m	48	2.5	20m	635n		E101q	PY1205
43	HDSP7517	.30	1	160u△	2m△	Red		VR	52m△	15m	48	2.5	20m	635n		E101br	PY1205a
44	HDSP7518	.30	1	160u△	2m△	Red	CC	VR	52m△	15m	48	2.5	20m	635n		E101o	PY1205a
45	LN513YA	.30	1	180u	10m	Orange	CA	NR	50m	20m	38%	2.8	20m	590n		E141n	PY520
46	LN513YK	.30	1	180u	10m	Orange	CC	NR	50m	20m	38%	2.8	20m	590n		E141aw	PY520
47	LN513YK-S	.30	1	180u	10m	Orange	CC	NR	50m	20m	38%	2.8	20m	590n		E121a	PY686
48	LTS311AR	.30	1	200u	10m	Red	OTHR	NVR	55m	25m	28	2.0	20m	655n	E141cb	E141ch	PY1339b
49	LTS312AR	.30	1	200u	10m	Red	CA	NB	55m	25m	28	2.0	20m	655n		E141cf	PY1337c
50	LTS315AR	.30	1	200u	10m	Red	CC	NR	55m	25m	28	2.0	20m	655n		E141o	PY1337c
51	LTS316AR	.30	1	200u	10m	Red		NVR	55m	25m	28	2.0	20m	655n	CA(+/-1)	E141cp	PY1339b
52	HDSP7901	.30	1	220u△	10m△	Green	CA	NR	105m△	30m	28	2.5	10m	555n		E101q	PY1205
53	HDSP7903	.30	1	220u△	10m△	Green	CC	NR	105m△	30m	28	2.5	10m	555n		E101p	PY1205
54	HDSP7907	.30	1	220u△	10m△	Green		VR	105m△	30m	28	2.5	10m	555n		E101br	PY1205a
55	HDSP7908	.30	1	220u△	10m△	Green		VR	105m△	30m	28	2.5	10m	555n		E101bu	PY1205a
56	MS133C	.30	1	220u	20m	Red	CC	NL	300m	20m	27	1.7	20m	660n		E141by	PY913
57	A32	.30	1	300u	10m	Green	CA	NB								E141c	PY29
58	A320	.30	1	300u	10m	Green		PR								E141ai	PY29h
59	C3021-11	.30	1	300u	10m	Green	OTHR	NR								E141e	PY29
60	LED32	.30	1	300u		Green		N		100u	28$	2.5	10m	565n		None ♦	PY506
61	LED33	.30	1	300u		Green		N		100u	28$	2.5	10m	565n		None ♦	PY506
62	LN513RA	.30	1	300u	5.0m	Red	CA	NR	50m	20m	27	2.1 †	20m	700n		E141n	PY520
63	LN513RK	.30	1	300u	5.0m	Red	CC	NR	50m	20m	27	2.1 †	20m	700n		E141aw	PY520
64	LN513RK-S	.30	1	300u	5.0m	Red	CC	NR	60m	20m	38%	2.8	20m	700n		E121a	PY686
65	LTS311AP	.30	1	300u	10m	Red	OTHR	NVR	40m	15m	28	2.8	20m	697n	E141cb	E141ch	PY1339b
66	LTS312AP	.30	1	300u	10m	Red	CA	NB	40m	15m	28	2.8	20m	697n		E141cf	PY1337c
67	LTS315AP	.30	1	300u	10m	Red	CC	NR	40m	15m	28	2.8	20m	697n		E141o	PY1337c
68	LTS316AP	.30	1	300u	10m	Red		NVR	40m	15m	28	2.8	20m	697n	CA(+/-1)	E141cp	PY1339b
69	MG131A	.30	1	300u	10m	Green	CA	NR	300m	20m	27	2.2	10m	565n		E101q	PY787
70	MY131A	.30	1	300u	10m	Yellow	CA	NR	300m	20m	27	2.2	20m	585n		E101q	PY787
71	S3021-11	.30	1	300u	10m	Green		PR							Univ +/- 1	E141as	PY29h
72	CMN3910A	.30	1	320u	10m	Red	CA	NR	600m	30m	48	2.5	20m			E141n	PY1337
73	CMN3920A	.30	1	320u		Red	CA	NL	600m	30m	48	2.5	20m			E141m	PY1338
74	CMN3940A	.30	1	320u		Red	CC	NR	600m	30m	48	2.5	20m			E141o	PY1337
75	MAN81A	.30	1	320u△	10m	Yellow	CA	NR	400m	160m	48	3.5	20m	585n		E141n	PY81a ☑
76	MAN82A	.30	1	320u△	10m	Yellow	CA	NL	400m	160m	48	3.5	20m	585n		E141m	PY81 ☑
77	MAN84A	.30	1	320u△	10m	Yellow	CC	NR	400m	160m	48	3.5	20m	585n		E141o	PY81c ☑
78	MAN3810A	.30	1	320u	10m	Yellow	CA	NR	600m	25m	48	3.0	20m	585n		E141n	PY809b
79	MAN3820A	.30	1	320u	10m	Yellow		NL	600m	25m	48	3.0	20m	585n		E141n	PY809b
80	MAN3840A	.30	1	320u	10m	Yellow	CC	NR	600m	25m	48	3.0	20m	585n		E141o	PY809b
81	MAN3910A	.30	1	320u	10m	Red	CA	NR	600m	240m	48	2.5	20m	635n		E141n	PY81a
82	MAN3920A	.30	1	320u	10m	Red	CA	NL	600m	240m	48	2.5	20m	635n		E141m	PY81
83	MAN3940A	.30	1	320u	10m	Red	CC	NR	600m	240m	48	2.5	20m	635n		E141o	PY81a
84	5082-7730	.30	1	350u	20m	Red	CA	NL		150m	48	2.0	20m	655n		E141be	PY635 ☑
85	5082-7731	.30	1	350u	20m	Red	CA	NR		150m	48	2.0	20m	655n		E141n	PY635 ☑
86	5082-7736	.30	1	350u	20m	Red	CA	NR		150m	48	2.0	20m	655n	Universal	E141f	PY635a☑
87	LED34	.30	1	350u		Yellow		N		100u	28$	2.5	10m	580n		None ♦	PY506
88	LED35	.30	1	350u		Yellow		N		100u	28$	2.5	10m	580n		None ♦	PY506
89	LED36	.30	1	350u		Orange		N		100u	28$	2.5	10m	655n		None ♦	PY506
90	LED37	.30	1	350u		Orange		N		100u	28$	2.5	10m	655n		None ♦	PY506
91	MR133C	.30	1	350u	20m	Red	CC	NL	300m	20m	27	2.2	20m	660n		E141by	PY913
92	MS132A	.30	1	350u	20m		CA	NR	300m	20m	27	2.1	20m	660n		E141bx	PY912
93	MS132C	.30	1	350u	20m		CC	NR	300m	20m	27	2.1	20m	660n		E141o	PY912
94	MS133A	.30	1	350u	20m	Red	CA	NL				2.6	20m	700n		E141m	PY913
95	MS134A	.30	1	350u	20m	Red	CA	NB				2.6	20m	700n		E141cf	None
96	MS134C	.30	1	350u	20m	Red	CC	NB				2.6	20m	700n		E141cg	None
97	AND3010GAL	.30	1	0.4m	2m	Green	CA	NB		25m	28	2.5	10m	555n		E141c	PY568
98	AND3010GCL	.30	1	0.4m	20m	Green	OTHR	NB		25m	28	2.5	10m	555n		E141e	PY568
99	HP5082-7620	.30	1	400u△	5.0m	Yellow	CA	NL	81m△	20m	48	2.5	20m	583n		E141am	PY60b ☑
100	HP5082-7621	.30	1	400u△	5.0m	Yellow	CA	NR	△	20m	48	2.5	20m	583n		E141ar	PY60c ☑
101	TLG333	.30	1	0.4m△	10m△	Green	CA	NR		20.m	27	2.5	10m	565n		E141m	PY29j
102	HDSP7301	.30	1	450u	20m	Red	CA	NR	73m△	25m	48	2.0	20m	655n		E101q	PY1205A
103	HDSP7302	.30	1	450u	20m	Red		NRK	73m△	25m	48	2.0	20m	655n		E101x	PY1205B
104	HDSP7304	.30	1	450u	20m△	Red		NRK	73m△	25m	48	2.0	20m	655n		E101y	PY1205D
105	HDSP7307	.30	1	450u	20m△	Red		RV	73m△	25m	48	2.0	20m	655n		E101bd	PY1205E
106	HDSP7308	.30	1	450u	20m△	Red	CC	RV	73m△	25m	48	2.0	20m	655n		E101o	PY1205F
107	HDSP7311	.30	1	450u	20m	Red	CA	NR	73m△	25m	48	2.0	20m	655n	Bright Red	E101q	PY1205A
108	HDSP7317	.30	1	450u	20m△	Red		RV	73m△	25m	48	2.0	20m	655n	Bright Red	E101bd	PY1205E
109	HDSP7318	.30	1	450u	20m△	Red	CC	RV	73m△	25m	48	2.0	20m	655n	Bright Red	E101o	PY1205F
110	A34(2)	.30	1	480u	10m	Yellow	CA	NB								E141c	PY29

SYMBOLS AND CODES EXPLAINED IN INTERPRETER

35. LED CHARACTER DISPLAYS - Seven-Segment Numeric (Cont'd)

IN ORDER OF FONT AND: (1) CHAR. HEIGHT (2)NO. CHAR. (3) INTENSITY & (4) TYPE NO.

LINE No.	4 TYPE NUMBER	1 CHAR. HGHT (in)	2 NO. CHAR	3 LUMINOUS INTENSITY Iv MIN (cd)	IF TEST (A)	COLOR	CONN.	DISP NOMEN	PD RATED MAX (W)	IF RATED MAX (A)	TEMP RNGE CODE	FORWARD VOLTAGE VF MAX (V)	IF TEST (A)	PEAK WAVE-LENGTH λP (m)	FEATURES	DRAWINGS SCHE-MATIC	OUTLINE
1	A340	.30	1	480u	10m	Yellow		PR								E141ai	PY29h
2	C35	.30	1	480u	10m	Yellow	OTHR	NR								E141e	PY29
3	C3031-11	.30	1	480u	10m	Yellow	OTHR	NR								E141e	PY29
4	S3031-11	.30	1	480u	10m	Yellow		PR							Univ +/- 1	E141as	PY29h
5	745-0017	.30	1	500u	20m	Red	CA	NL	40m	25m	28	2.0	20m	655n		E141m	PY568a⊠
6	749-1801	.30	1	500u	20m	Red	CA	NL	40m	25m	28	2.0	20m	655n		E141m	PY570 ⊠
7	LED30	.30	1	500u		Red		N		100u	28$	2.0	20m	655n		None ♦	PY506
8	LED30R	.30	1	500u		Red		N		100u	28$	2.0	20m	655n		None ♦	PY506
9	LED31	.30	1	500u		Red		N		100u	28$	2.0	20m	655n		None ♦	PY506
10	LED31R	.30	1	500u		Red		N		100u	28$	2.0	20m	655n		None ♦	PY506
11	LN513GA	.30	1	500u	10m	Green	CA	NR	50m	20m	27	2.1 †	20m	560n		E141n	PY520
12	LN513GK	.30	1	500u	10m	Green	CC	NR	50m	20m	27	2.1 †	20m	560n		E141aw	PY520
13	LN513GK-S	.30	1	500u	10m	Green	CC	NR	60m	20m	38%	2.8	20m	560n		E121a	PY686
14	CMN3620A	.30	1	510u	10m	Orange	CA	NL	600m	30m	48	2.5	20m			E141m	PY1337
15	CMN3640A	.30	1	510u	10m	Orange	CC	NR	600m	30m	48	2.5	20m			E141o	PY1337b
16	MAN3410A	.30	1	510u	10m	Green	CA	NR	600m	30m	48	3.0	20m	562n		E141n	PY809b
17	MAN3420A	.30	1	510u	10m	Green	CA	NR	600m	30m	48	3.0	20m	562n		E141m	PY809b
18	MAN3440A	.30	1	510u	10m	Green	CC	NR	600m	30m	48	3.0	20m	562n		E141o	PY809b
19	MAN3610A	.30	1	510u	10m	Orange	CA	NR	400m	160m	48	2.5	20m	630n		E141n	PY81a ⊠
20	MAN3620A	.30	1	510u	10m	Orange	CA	NL	400m	160m	48	2.5	20m	630n		E141m	PY81 ⊠
21	MAN3640A	.30	1	510u	10m	Orange	CC	NR	400m	160m	48	2.5	20m	630n		E141o	PY81c ⊠
22	HP5082-7610	.30	1	550u△	5.0m	Red	CA	NL	81m△	20m	48	2.5	20m	635n		E141am	PY60b ⊠
23	HP5082-7611	.30	1	550u△	5.0m	Red	CA	NR	81m△	20m	48	2.5	20m	635n		E141ar	PY60c ⊠
24	AND3010HAL	.30	1	0.6m	20m	Red	CA	NB		25m	28	2.0	20m	655n		E141c	PY568
25	AND3010HCL	.30	1	0.6m	20m	Red	OTHR	NB		25m	28	2.0	20m	655n		E141e	PY568
26	AND3010RAL	.30	1	0.6m	20m	Red	CA	NB		25m	28	2.0	20m	655n		E141c	PY568
27	AND3010RCL	.30	1	0.6m	20m	Red	OTHR	NB		25m	28	2.0	20m	655n		E141e	PY568
28	LAA2010	.30	1	600u△	10m△	Red	CA	NL	110m	20m	48	1.6 †	10m	655n		E141be	PY913a
29	LAA2110	.30	1	600u△	10m△	Red	CA	NR	110m	20m	48	1.6 †	10m	655n		E141n	PY913a
30	LAA3110	.30	1	600u△	10m△	Red	CA	NL	110m	20m	48	1.6 †	10m	655n		E141m	PY913a
31	LAA3210	.30	1	600u△	10m△	Red	CA	NR	110m	20m	48	1.6 †	10m	655n		E141n	PY913a
32	LAC2010(2)	.30	1	600u△	10m△	Red	CC	NR	110m	20m	48	1.6 †	10m	655n		E141ax	PY1428
33	LAC3010	.30	1	600u△	10m△	Red	CC	NR	110m	20m	48	1.6 †	10m	655n		E141o	PY1429
34	LAC3110	.30	1	600u△	10m△	Red	CC	NR	110m	20m	48	1.6 †	10m	655n		E141ax	PY1428
35	LTS311AY	.30	1	600u	10m	Yellow	OTHR	NVR	60m	20m	28	2.8	20m	585n	E141cb	E141ch	PY1339b
36	LTS311R	.30	1*	600u	20m	Red	CA	NVR								E141f	PY1359
37	LTS312AY	.30	1	600u	10m	Yellow	CA	NB	60m	20m	28	2.8	20m	585n		E141cf	PY1337c
38	LTS312R	.30	1	600u	20m	Red		NB								E141cf	PY1358
39	LTS313R	.30	1	600u	20m	Red		NR								E141ax	PY1358
40	LTS315AY	.30	1	600u	10m	Yellow	CC	NR	60m	20m	28	2.8	20m	585n		E141o	PY1337c
41	LTS315R	.30	1	600u	20m	Red	CC	NR								E141o	PY1358
42	LTS316AY	.30	1	600u	10m	Yellow		NVR	60m	20m	28	2.8	20m	585n	CA(+/-1)	E141cp	PY1339b
43	MS131A	.30	1	600u	10m	Red	CA	NR	300m	20m	27	2.2	20m	635n		E101q	None
44	MS131C	.30	1	600u	10m	Red	CA	NR	300m	20m	27	2.2	20m	635n	ComKa	E101am	PY787
45	AND3010OAL	.30	1	0.7m	20m	Orange	CA	NB		25m	28	2.5	10m	635n		E141c	PY568
46	AND3010OCL	.30	1	0.7m	20m	Orange	OTHR	NB		25m	28	2.5	10m	635n		E141e	PY568
47	AND3010YAL	.30	1	0.7m	20m	Yellow	CA	NB		25m	28	2.5	10m	585n		E141c	PY568
48	AND3010YCL	.30	1	0.7m	20m	Yellow	OTHR	NB		25m	28	2.5	10m	585n		E141e	PY568
49	HP5082-7730	.30	1	700u△	20m	Red	CA	NL	65m△	25m	48	2.0	20m	655n		E141am	PY60b ⊠
50	HP5082-7731	.30	1	700u△	20m	Red	CA	NR	65m△	25m	48	2.0	20m	655n		E141ar	PY60c ⊠
51	LTS311AE	.30	1	750u	10m	Orange	OTHR	NVR	75m	25m	28	2.8	20m	630n	E141cb	E141ch	PY1339b
52	LTS311AG	.30	1	750u	10m	Green	OTHR	NVR	75m	25m	28	2.8	20m	565n	E141cb	E141ch	PY1339b
53	LTS311AHR	.30	1	750u	10m	Red	OTHR	NVR	75m	25m	28	2.8	20m	635n	E141cb	E141ch	PY1339b
54	LTS312AE	.30	1	750u	10m	Orange	CA	NB	75m	25m	28	2.8	20m	630n		E141cf	PY1337c
55	LTS312AG	.30	1	750u	10m	Green	CA	NB	75m	25m	28	2.8	20m	565n		E141cf	PY1337c
56	LTS312AHR	.30	1	750u	10m	Red	CA	NB	75m	25m	28	2.8	20m	635n		E141cf	PY1337c
57	LTS315AE	.30	1	750u	10m	Orange	CC	NR	75m	25m	28	2.8	20m	630n		E141o	PY1337c
58	LTS315AG	.30	1	750u	10m	Green	CC	NR	75m	25m	28	2.8	20m	565n		E141o	PY1337c
59	LTS315AHR	.30	1	750u	10m	Red	CC	NR	75m	25m	28	2.8	20m	635n		E141o	PY1337c
60	LTS316AE	.30	1	750u	10m	Orange		NVR	75m	25m	28	2.8	20m	630n	CA(+/-1)	E141cp	PY1339b
61	LTS316AG	.30	1	750u	10m	Green		NVR	75m	25m	28	2.8	20m	565n	CA(+/-1)	E141cp	PY1339b
62	LTS316AHR	.30	1	750u	10m	Red		NVR	75m	25m	28	2.8	20m	635n	CA(+/-1)	E141cp	PY1339b
63	MG132A	.30	1	800u	20m	Green	CA	NR				3.0	20m	565n		E141bx	PY912
64	MG132C	.30	1	800u	20m	Green	CC	NR				3.0	20m	565n		E141o	PY912
65	MG133A	.30	1	800u	20m	Green		NL	300m	20m	27	2.2 †	20m	565n	ComKa	None	PY847
66	MG133C	.30	1	800u	20m	Green	CC	NL	300m	20m	27	2.2	20m	565n		E141by	PY913
67	MG134A	.30	1	800u	20m	Green	CA	NB				3.0	20m	565n		E141cf	None
68	MG134C	.30	1	800u	20m	Green	CC	NB				3.0	20m	565n		E141cg	None
69	MO134A	.30	1	800u	20m	Orange	CA	NB	300m	200m	27	2.2 †	20m	630n		E141cf	None
70	MO134C	.30	1	800u	20m	Orange	CC	NB	300m	200m	27	2.2 †	20m	630n		E141cg	None
71	MY132C	.30	1	800u	20m	Yellow	CC	NR				3.0	20m	585n		E141o	PY912
72	MY133A	.30	1	800u	20m	Yellow	CA	NL				3.0	20m	585n		E141m	PY913
73	MY133C	.30	1	800u	20m	Yellow	CC	NL	300m	20m	27	2.2	20m	585n		E141by	PY913
74	MY134A	.30	1	800u	20m	Yellow	CA	NB				3.0	20m	585n		E141cf	None
75	MY134C	.30	1	800u	20m	Yellow	CC	NB				3.0	20m	585n		E141cg	None
76	A36(2)	.30	1	1.0m	10m	Orange	CA	NB								E141c	PY29
77	A36R	.30	1	1.0m	10m	Red	CA	NB							HiEff-Com An	E141c	PY29
78	A360	.30	1	1.0m	10m	Orange		PR								E141ai	PY29h
79	A360R	.30	1	1.0m	10m	Red		PR							Hi Eff;Com A	E141ai	PY29h
80	C37	.30	1	1.0m	10m	Orange	OTHR	NR								E141e	PY29
81	C37R	.30	1	1.0m	10m	Red	OTHR	NR							Hi Eff-Com K	E141e	PY29
82	C3041-11	.30	1	1.0m	10m	Orange	OTHR	NR								E141e	PY29
83	C3041R11	.30	1	1.0m	10m	Red	OTHR	NR							HIEff;Comk	E141e	None
84	S3041-11	.30	1	1.0m	10m	Orange		PR							Univ +/- 1	E141as	PY29h
85	S3041R11	.30	1	1.0m	10m	Red	OTHR	NR							Hi EffComk	E141e	None
86	HDSP3600	.30	1	1.1m	10m	Green	CA	NL	105m△	30m	48	2.5	10m	566n		E141m	PY61
87	HDSP3601	.30	1	1.1m	10m	Green	CA	NR	105m△	30m	48	2.5	10m	566n		E141n	PY61
88	HDSP3606	.30	1	1.1m	10m	Green	OTHR	NV	105m△	30m	48	2.5	10m	566n		E141cb	PY81b
89	LN513OA	.30	1	1.2m	10m	Orange	CA	NR	50m	20m	38%	2.8	20m	630n		E141n	PY520
90	LN513OK	.30	1	1.2m	10m	Orange	CC	NR	50m	20m	38%	2.8	20m	630n		E141aw	PY520
91	LN513OK-S	.30	1	1.2m	10m	Orange	CC	NR	50m	20m	38%	2.8	20m	630n		E121a	PY686
92	HDSP7801	.30	1	1.3m△	10m△	Green	CA	NR	105m△	30m	48	2.5	10m	566n		E101q	PY1205A
93	HDSP7802	.30	1	1.3m△	10m△	Green		NRK	105m△	30m	48	2.5	10m	566n		E101x	PY1205B
94	HDSP7804	.30	1	1.3m△	10m△	Green		NRK	105m△	30m	48	2.5	10m	566n	ComK	E101y	PY1205D
95	HDSP7807	.30	1	1.3m△	10m△	Green		RV	105m△	30m	48	2.5	10m	566n		E101bd	PY1205E
96	HDSP7808	.30	1	1.3m△	10m△	Green	CC	RV	105m△	30m	48	2.5	10m	566n	ComK	E101o	PY1205F
97	HDSP3530	.30	1	1.5m△	100m	Red	CA	NL	105m△	40m	48	3.5	100m	635n		E141am	PY60b ⊠
98	HDSP3531	.30	1	1.5m△	100m	Red	CA	NR	105m△	40m	48	3.5	100m	635n		E141ar	PY60c ⊠
99	HDSP4030	.30	1	1.5m△	100m	Yellow	CA	NL	105m△	40m	48	3.5	100m	583n		E141ar	PY60b ⊠
100	HDSP4031	.30	1	1.5m△	100m	Yellow	CA	NR	105m△	40m	48	3.5	100m	583n		E141am	PY60c ⊠
101	5082-7620	.30	1	2.3m△	20m△	Yellow	CA	NL	81m△	20m	48	2.5	20m	583n		E141m	PY15
102	5082-7621	.30	1	2.3m△	20m△	Yellow	CA	NR	81m△	20m	48	2.5	20m	583n		E141n	PY15
103	5082-7623	.30	1	2.3m△	20m△	Yellow	OTHR	NL	81m△	20m	48	2.5	20m	583n	ComK	E141e	PY437b
104	5082-7626	.30	1	2.3m△	20m△	Yellow		RV	81m△	20m	48	2.5	20m	583n	NonMplxd	E141as	PY15
105	LAA2013	.30	1	2.4m△	10m△	Yellow	CA	NL	115m	20m	48	2.0 †	10m	585n		E141be	PY913a
106	LAA2113	.30	1	2.4m△	10m△	Yellow	CA	NR	115m	20m	48	2.0 †	10m	585n		E141n	PY913a
107	LAA3113	.30	1	2.4m△	10m△	Yellow	CA	NL	115m	20m	48	2.0 †	10m	585n		E141m	PY913a
108	LAA3213	.30	1	2.4m△	10m△	Yellow	CA	NR	115m	20m	48	2.0 †	10m	585n		E141n	PY913a
109	LAC2013	.30	1	2.4m△	10m△	Yellow	CC	NR	115m	20m	48	2.0 †	10m	585n		E141ax	PY1428
110	LAC3013	.30	1	2.4m△	10m△	Yellow	CC	NR	115m	20m	48	2.0 †	10m	585n		E141o	PY1429

SYMBOLS AND CODES EXPLAINED IN INTERPRETER

35. LED CHARACTER DISPLAYS - Seven-Segment Numeric (Cont'd)

IN ORDER OF FONT AND: (1) CHAR. HEIGHT (2)NO. CHAR. (3) INTENSITY & (4) TYPE NO.

LINE No.	4 TYPE NUMBER	1 CHAR. HGHT (in)	2 NO. CHAR	3 LUMINOUS INTENSITY Iv MIN (cd)	IF TEST (A)	COLOR	CONN.	DISP NOMEN	PD RATED MAX (W)	IF RATED MAX (A)	TEMP RNGE CODE - +	FORWARD VOLTAGE VF MAX (V)	IF TEST (A)	PEAK WAVE-LENGTH λP (m)	FEATURES	DRAWINGS SCHE-MATIC	OUTLINE
1	LAC3113	.30	1	2.4mΔ	10mΔ	Yellow	CC	NR	115m	20m	48	2.0 †	10m	585n		E141ax	PY1428
2	LTS311Y	.30	1*	2.5m	20m	Yellow	CA	NVR								E141f	PY1359
3	LTS312Y	.30	1	2.5m	20m	Yellow		NB								E141cf	PY1358
4	LTS313Y	.30	1	2.5m	20m	Yellow		NR								E141ax	PY1358
5	LTS315Y	.30	1	2.5m	20m	Yellow	CC	NR								E141o	PY1358
6	HDSP7401	.30	1	2.7mΔ	20mΔ	Yellow	CA	NR	81mΔ	20m	48	2.5	20m	583n		E101q	PY1205A
7	HDSP7402	.30	1	2.7mΔ	20mΔ	Yellow		NRK	81mΔ	20m	48	2.5	20m	583n		E101x	PY1205B
8	HDSP7404	.30	1	2.7mΔ	20mΔ	Yellow		NRK	81mΔ	20m	48	2.5	20m	583n		E101y	PY1205D
9	HDSP7407	.30	1	2.7mΔ	20mΔ	Yellow		RV	81mΔ	20m	48	2.5	20m	583n		E101bd	PY1205E
10	HDSP7408	.30	1	2.7mΔ	20mΔ	Yellow	CC	RV	81mΔ	20m	48	2.5	20m	583n		E101o	PY1205F
11	5082-7610	.30	1	3.0mΔ	20mΔ	Red	CA	NL	105mΔ	30m	48	2.5	20m	635n		E141m	PY15
12	5082-7611	.30	1	3.0mΔ	20mΔ	Red	CA	NR	105mΔ	30m	48	2.5	20m	635n		E141n	PY15
13	5082-7613	.30	1	3.0mΔ	20mΔ	Red	OTHR	NR	105mΔ	30m	48	2.5	20m	635n	ComK	E141e	PY437b
14	5082-7616	.30	1	3.0mΔ	20mΔ	Red		RV	105mΔ	30m	48	2.5	20m	635n	NonMplxd	E141as	PY15
15	LTS311G	.30	1*	3.0m	20m	Green	CA	NVR								E141f	PY1359
16	LTS312G	.30	1	3.0m	20m	Green		NB								E141cf	PY1358
17	LTS313G	.30	1	3.0m	20m	Green		NR								E141ax	PY1358
18	LTS315G	.30	1	3.0m	20m	Green	CC	NR								E141o	PY1358
19	LAA2012	.30	1	3.1mΔ	10mΔ	Green	CA	NL	115m	20m	48	2.0 †	10m	565n		E141be	PY913a
20	LAA2112	.30	1	3.1mΔ	10mΔ	Green	CA	NR	115m	20m	48	2.0 †	10m	565n		E141n	PY913a
21	LAA3112	.30	1	3.1mΔ	10mΔ	Green	CA	NL	115m	20m	48	2.0 †	10m	565n		E141m	PY913a
22	LAA3212	.30	1	3.1mΔ	10mΔ	Green	CA	NR	115m	20m	48	2.0 †	10m	565n		E141n	PY913a
23	LAC2012	.30	1	3.1mΔ	10mΔ	Green	CC	NR	115m	20m	48	2.0 †	10m	565n		E141ax	PY1428
24	LAC3012	.30	1	3.1mΔ	10mΔ	Green	CC	NR	115m	20m	48	2.0 †	10m	565n		E141o	PY1429
25	LAC3112	.30	1	3.1mΔ	10mΔ	Green	CC	NR	115m	20m	48	2.0 †	10m	565n		E141ax	PY1428
26	LAA2011	.30	1	3.4mΔ	10mΔ	Red	CA	NL	120m	20m	48	1.9 †	10m	695n		E141be	PY913a
27	LAA2014	.30	1	3.4mΔ	10mΔ	Orange	CA	NL	115m	20m	48	2.0 †	10m	635n		E141be	PY913a
28	LAA2111	.30	1	3.4mΔ	10mΔ	Red	CA	NR	120m	20m	48	1.9 †	10m	695n		E141n	PY913a
29	LAA2114	.30	1	3.4mΔ	10mΔ	Orange	CA	NR	115m	20m	48	2.0 †	10m	635n		E141n	PY913a
30	LAA3111	.30	1	3.4mΔ	10mΔ	Red	CA	NL	120m	20m	48	1.9 †	10m	695n		E141m	PY913a
31	LAA3114	.30	1	3.4mΔ	10mΔ	Orange	CA	NL	115m	20m	48	2.0 †	10m	635n		E141m	PY913a
32	LAA3211	.30	1	3.4mΔ	10mΔ	Red	CA	NR	120m	20m	48	1.9 †	10m	695n		E141n	PY913a
33	LAA3214	.30	1	3.4mΔ	10mΔ	Orange	CA	NR	115m	20m	48	2.0 †	10m	635n		E141n	PY913a
34	LAC2011	.30	1	3.4mΔ	10mΔ	Red	CC	NR	120m	20m	48	1.9 †	10m	695n		E141ax	PY1428
35	LAC2014	.30	1	3.4mΔ	10mΔ	Orange	CC	NR	115m	20m	48	2.0 †	10m	635n		E141ax	PY1428
36	LAC3011	.30	1	3.4mΔ	10mΔ	Red	CC	NR	120m	20m	48	1.9 †	10m	695n		E141o	PY1429
37	LAC3014	.30	1	3.4mΔ	10mΔ	Orange	CC	NR	115m	20m	48	2.0 †	10m	635n		E141o	PY1429
38	LAC3111	.30	1	3.4mΔ	10mΔ	Red	CC	NR	120m	20m	48	1.9 †	10m	695n		E141ax	PY1428
39	LAC3114	.30	1	3.4mΔ	10mΔ	Orange	CC	NR	115m	20m	48	2.0 †	10m	635n		E141ax	PY1428
40	LTS311E	.30	1*	3.5m	20m	Orange	CA	NVR								E141f	PY1359
41	LTS311HR	.30	1*	3.5m	20m	Red	CA	NVR								E141f	PY1359
42	LTS312E	.30	1	3.5m	20m	Orange		NB								E141cf	PY1358
43	LTS312HR	.30	1	3.5m	20m	Red		NB								E141cf	PY1358
44	LTS313E	.30	1	3.5m	20m	Orange		NR								E141ax	PY1358
45	LTS313HR	.30	1	3.5m	20m	Red		NR								E141ax	PY1358
46	LTS315E	.30	1	3.5m	20m	Orange	CC	NR								E141o	PY1358
47	LTS315HR	.30	1	3.5m	20m	Red	CC	NR								E141o	PY1358
48	HDSP7501	.30	1	3.6mΔ	20mΔ	Red	CA	NR	73mΔ	30m	48	2.5	20m	635n		E101q	PY1205A
49	HDSP7502	.30	1	3.6mΔ	20mΔ	Red		NRK	73mΔ	30m	48	2.5	20m	635n		E101x	PY1205B
50	HDSP7504	.30	1	3.6mΔ	20mΔ	Red		NR	73mΔ	30m	48	2.5	20m	635n		E101y	PY1205D
51	HDSP7507	.30	1	3.6mΔ	20mΔ	Red		PR	73mΔ	30m	48	2.5	20m	635n		E101	PY1205E
52	HDSP7508	.30	1	3.6mΔ	20mΔ	Red	CC	PR	73mΔ	30m	48	2.5	20m	635n		E101o	PY1205F
53	C33	.30	1	300m	10m	Green	OTHR	NR								E141e	PY29
54	LTC3868A1P12	.30	1.5	65u	10m	Red	CC	NR	2.4	30m	26	2.8	20m	697n	(+/-1.8)	E2646	PY1392
55	NSN334	.30	2	100uΔ	10mΔ	Red	CA	NR		20m	27	2.0	10m	660n		E162c	PY418 ⧄
56	NSN373	.30	2	100uΔ	10mΔ	Red	CC	NR		20m	27	2.0	10m	660n		E162d	PY418 ⧄
57	NSN374	.30	2	100uΔ	10mΔ	Red	CA	NR		20m	27	2.0	10m	660n		E162e	PY418 ⧄
58	NSN381	.30	2	100uΔ	10mΔ	Red	CC	NR		20m	27	2.0	10m	660n		E162f	PY418 ⧄
59	NSN382	.30	2	100uΔ	10mΔ	Red	CA	NR		20m	27	2.0	10m	660n		E162g	PY418 ⧄
60	A303(2)	.30	2	150u	10m	Red	CA	ND								E102b	PY500
61	LTR322	.30	2	.15m	5.0m	Red	CC	N		13m	37	2.5	13m	700n	Com Ka	E102a	PY500 ⧄
62	LTR323	.30	2	.15m	5.0m	Red	CA	N		13m	37	2.5	13m	700n		E102b	PY500 ⧄
63	TLR322	.30	2	150u	5.0m	Red	CC	N		13m	37	2.5	13m	700n		E102a	PY500 ⧄
64	TLR323	.30	2	150u	5.0m	Red	CA	N		13m	37	2.5	13m	700n		E102b	PY500 ⧄
65	LTD322P	.30	2	200u	10m	Red	CC	NR	40m	15m	28	2.8	20m	697n		E102a	PY1379
66	LTD322R	.30	2	200u	10m	Red	CC	NR	55m	25m	28	2.0	20m	655n		E102a	PY1379
67	LTD323P	.30	2	200u	10m	Red	CA	NR	40m	15m	28	2.8	20m	697n		E102b	PY1379
68	LTD323R	.30	2	200u	10m	Red	CA	NR	55m	25m	28	2.8	20m	697n		E102b	PY1379
69	MS231A	.30	2	200u	10m	Red		N	300m	20m	28	2.1	20m	660n		None ♦	PY851
70	MS231C	.30	2	200u	10m	Red		N	300m	20m	28	2.1	20m	660n		None ♦	PY851
71	DM3000	.30	2	250u	10mΔ		CA	ND	280m	20m	27	3.0	10m	690n		E162o	PY768
72	DM3001	.30	2	250u	10mΔ		CC	ND	280m	20m	27	3.0	10m	690n		E162p	PY768
73	A323(1)	.30	2	300u	10m	Green	CA	ND								E102b	PY500
74	MMN39220(A)	.30	2	350u	10m	Red		NR	800m	20m	48	2.6	20m	630n		None ♦	PY1075
75	MMN39420(A)	.30	2	350u	10m	Red		NR	800m	20m	48	2.6	20m	630n		None ♦	PY1075
76	AND3020GAL	.30	2	0.4m	20m	Green	CC	NR		20m	28	2.5	10m	555n		E102a	PY500
77	AND3020GCL	.30	2	0.4m	20m	Green	CA	NR		20m	28	2.5	10m	555n		E102b	PY500
78	A343	.30	2	480u	10m	Yellow	CA	ND								E102b	PY500
79	745-0018	.30	2	500u	20m	Red	CA	PR	40m	25m	28	2.0	20m	655n		E141as	PY568 ⧄
80	LTD322G	.30	2	500u	10m	Green	CC	NR	75m	25m	28	2.8	20m	565n		E102a	PY1379
81	LTD323G	.30	2	500u	10m	Green	CA	NR	75m	25m	28	2.8	20m	565n		E102b	PY1379
82	MMN36420(A)	.30	2	510u	10m	Orange		NR	800m	20m	48	2.6	20m	6.0n		None ♦	PY1075
83	MMN38220(A)	.30	2	510u	10m	Yellow		NR	800m	20m	48	3.0	20m	585n		None ♦	PY1075
84	MMN38420(A)	.30	2	510u	10m	Yellow		NR	800m	20m	48	3.0	20m	585n		None ♦	PY1075
85	AND3020HAL	.30	2	0.6m	20m	Red	CC	NR		20m	28	2.0	20m	655n		E102a	PY500
86	AND3020HCL	.30	2	0.6m	20m	Red	CA	NR		20m	28	2.0	20m	655n		E102b	PY500
87	AND3020RAL	.30	2	0.6m	20m	Red	CC	NR		20m	28	2.0	20m	655n		E102a	PY500
88	AND3020RCL	.30	2	0.6m	20m	Red	CA	NR		20m	28	2.0	20m	655n		E102b	PY500
89	LAA3510	.30	2	600uΔ	10mΔ	Red		N	110m	20m	48	1.6 †	10m	655n		E092a	PY1432
90	LAC3510	.30	2	600uΔ	10mΔ	Red	CC	N	110m	20m	48	1.6 †	10m	655n		E102a	PY1432
91	AND3020OAL	.30	2	0.7m	20m	Orange	CC	NR		20m	28	2.5	10m	635n		E102a	PY500
92	AND3020OCL	.30	2	0.7m	20m	Orange	CA	NR		20m	28	2.5	10m	635n		E102b	PY500
93	AND3020YAL	.30	2	0.7m	20m	Yellow	CC	NR		20m	28	2.5	10m	585n		E102a	PY500
94	AND3020YCL	.30	2	0.7m	20m	Yellow	CA	NR		20m	28	2.5	10m	585n		E102b	PY500
95	A363	.30	2	1.0m	10m	Orange	CA	ND								E102b	PY500
96	A363R	.30	2	1.0m	10m	Red	CA	ND							HiEff-Com An	E102b	PY500
97	C373	.30	2	1.0m	10m	Orange	CC	N								E102a	PY500
98	LAA3513	.30	2	2.4mΔ	10mΔ	Yellow		N	115m	20m	48	2.0 †	10m	585n		E092a	PY1432
99	LAC3513	.30	2	2.4mΔ	10mΔ	Yellow	CC	N	115m	20m	48	2.0 †	10m	585n		E102a	PY1432
100	LAA3512	.30	2	3.1mΔ	10mΔ	Green		N	115m	20m	48	2.0 †	10m	565n		E092a	PY1432
101	LAC3512	.30	2	3.1mΔ	10mΔ	Green	CC	N	115m	20m	48	2.0 †	10m	565n		E102a	PY1432
102	LAA3511	.30	2	3.4mΔ	10mΔ	Red		N	120m	20m	48	1.9 †	10m	695n		E092a	PY1432
103	LAA3514	.30	2	3.4mΔ	10mΔ	Orange		N	115m	20m	48	2.0 †	10m	635n		E092a	PY1432
104	LAC3511	.30	2	3.4mΔ	10mΔ	Red	CC	N	120m	20m	48	1.9 †	10m	695n		E102a	PY1432
105	LAC3514	.30	2	3.4mΔ	10mΔ	Orange	CC	N	115m	20m	48	2.0 †	10m	635n		E102a	PY1432
106	LTC3137A1-24	.30	3*			Red	CC	NC								E304q	PY1388
107	LTC3167B1-24	.30	3*			Red	CC	NC								E284j	PY1389
108	LTC3167B1G24	.30	3*			Green	CC	NC								E284j	PY1389
109	LTC3169A1G12	.30	3*			Green	CA	NK								E284k	PY1390
110	GL3P405	.30	3	200u	5.0m	Red	OTHR	NRC		10m	26	2.5	5.0m	695		E194c	PY763

SYMBOLS AND CODES EXPLAINED IN INTERPRETER

35. LED CHARACTER DISPLAYS- Seven-Segment Numeric (Cont'd)

IN ORDER OF FONT AND: (1) CHAR. HEIGHT (2)NO. CHAR. (3) INTENSITY & (4) TYPE NO.

LINE No.	4 TYPE NUMBER	1 CHAR. HGHT (in)	2 NO. CHAR	3 LUMINOUS INTENSITY Iv MIN (cd)	IF TEST (A)	COLOR	CONN.	DISP NOMEN	PD RATED MAX (W)	IF RATED MAX (A)	TEMP RNGE CODE - +	FORWARD VOLTAGE VF MAX (V)	IF TEST (A)	PEAK WAVE-LENGTH λP (m)	FEATURES	DRAWINGS SCHE-MATIC	OUTLINE
1	GL3P407	.30	3	200u	5.0m	Red	CC	NRC		10m	26	2.5	5.0m	695		E254a	PY764
2	GL3N405	.30	3	300u	10m	Green	OTHR	NRC		15m	26	2.5	10m	565		E194c	PY763
3	GL3N407	.30	3	300u	10m	Green	CC	NRC		15m	26	2.5	10m	565		E254a	PY764
4	GL3P401	.30	3	300u	5.0m	Red	OTHR	NR		10m	37	2.5	5.0m	695		E184d	PY762a
5	GL3P403	.30	3	300u	5.0m	Red	OTHR	NRC		10m	37	2.5	5.0m	695		E204f	PY762
6	GL3D405	.30	3	400u	10m	Red	OTHR	NRC		15m	26	2.2	10m	635		E194c	PY763
7	GL3N403	.30	3	500u	10m	Red	OTHR	NRC		15m	37	2.5	10m	565		E204f	PY762
8	GL3D403	.30	3	600u	10m	Green	OTHR	NRC		20m	37	2.2	10m	635		E204f	PY762
9	LTC3197A1P12	.30	3.5	65u	10m	Red	CC	NR	2.4	30m	26	2.8	20m	697n	(18:88)	E264b	PY1391
10	LTC3197A1-12	.30	4	35u	10m	Red	CA	NR	2.0	30m	26	2.2	20m	655n		E164m	PY1391
11	LTC3877	.30	4	35u	10m	Red	CA	NR	2.0	30m	26	2.2	20m	655n		E364c	PY1393
12	LTC3881	.30	4	35u	10m	Red		NR	2.0	30m	26	2.2	20m	655n		E144b	PY1394
13	LTC3882	.30	4	35u	10m	Red		NR	2.0	30m	26	2.0	20m	655n		E164o	PY1395
14	LTC3137A1P12	.30	4	40u	10m	Red		NR	2.4	30m	26	2.8	20m	697n		E304ZZ	PY1455
15	TLR2110	.30	4	40u	40m	Red	OTHR	NC		15m	37	3.0	40m	700n		E244b	PY670 ☑
16	TLR2120	.30	4	40u	40m	Red	OTHR	NC		15m	37	3.0	40m	700n		E244d	PY670 ☑
17	TLR4115	.30	4	40u	40m	Red	OTHR	NC		15m	37	3.0	40m	700n		E244a	PY670 ☑
18	TLR4125	.30	4	40u	40m	Red	OTHR	NC		15m	37	3.0	40m	700n		E244c	PY670 ☑
19	LTC3137A1P24	.30	4	65u	10m	Red		NR	2.4	30m	26	2.8	20m	697n		E304ZZ	PY1455
20	LTC3703SYA2	.30	4	65u	10m	Red		NR	2.4	30m	26	2.8	20m	697n		E184g	PY1457
21	LTC3768A1P12	.30	4	65u	10m	Red	CA	NR	2.4	30m	26	2.8	20m	697n		E164m	PY1458
22	LTC3881P	.30	4	65u	10m	Red		NR	2.4	30m	26	2.8	20m	697n		E144b	PY1394
23	LTC3882P	.30	4	65u	10m	Red		NR	2.4	30m	26	2.8	20m	697n		E164o	PY1395
24	TLG2110	.30	4	80u	40m	Green	OTHR	NC		15m	37	3.0	40m	565n		E244b	PY670 ☑
25	TLG2120	.30	4	80u	40m	Green	OTHR	NC		15m	37	3.0	40m	565n		E244d	PY670 ☑
26	TLG4115	.30	4	80u	40m	Green	OTHR	NC		15m	37	3.0	40m	565n		E244a	PY670 ☑
27	TLG4125	.30	4	80u	40m	Green	OTHR	NC		15m	37	3.0	40m	565n		E244c	PY670 ☑
28	LTC3137A1G24	.30	4	90u	10m	Green		NR	2.4	30m	26	2.8	20m	565n		E304ZZ	PY1455
29	LTC3702SG	.30	4	90u	10m	Green		NR	2.4	30m	26	2.8	20m	565n		E244l	PY1456
30	LTC3708SG	.30	4	90u	10m	Green		NR	2.4	30m	26	2.8	20m	565n		E245d	None
31	LTC3768A1G12	.30	4	90u	10m	Green	CA	NR	2.4	30m	26	2.8	20m	565n		E164m	PY1458
32	LTC3881G	.30	4	90u	10m	Green		NR	2.4	30m	26	2.8	20m	565n		E144b	PY1394
33	LTC3882G	.30	4	90u	10m	Green		NR	2.4	30m	26	2.8	20m	565n		E164o	PY1395
34	LTM8328P	.30	4	.10m		Red		NR	660m		27			660n	- Int/OTHR	None	PY1602
35	LTR2110	.30	4	.10m	40m	Red	OTHR	N		15m	37	3.0	40m	700n		E244a	PY895 ☑
36	LTR2120	.30	4	.10m	40m	Red	OTHR	N		15m	37	3.0	40m	700n	Com Ka	E244c	PY895 ☑
37	LTR4115	.30	4	.10m	40m	Red	OTHR	N		15m	37	3.0	40m	700n		E244a	PY895 ☑
38	LTR4125	.30	4	.10m	40m	Red	OTHR	N		15m	37	3.0	40m	700n	Com Ka	E244c	PY895 ☑
39	NSB3382	.30	4	100u△	10m△	Red	CA	NR		20m	27	2.0	10m	660n		E164a	PY419 ☑
40	NSB3881	.30	4	100u△	10m△	Red	CC	NR		20m	27	2.0	10m	660n		E164b	PY419 ☑
41	NSB3882	.30	4	100u△	10m△	Red	CA	NR		20m	27	2.0	10m	660n		E164c	PY419 ☑
42	LTG2110	.30	4	.15m	40m	Green	OTHR	NRC		15m	37	3.0	40m	565n		E244a	PY895 ☑
43	LTG2120	.30	4	.15m	40m	Green	OTHR	NRC		15m	37	3.0	40m	565n	Com Ka	E244c	PY895 ☑
44	LTG4115	.30	4	.15m	40m	Green	OTHR	NRC		15m	37	3.0	40m	565n	Com Ka	E244a	PY895 ☑
45	LTG4125	.30	4	.15m	40m	Green	OTHR	NRC		15m	37	3.0	40m	565n	Com Ka	E244c	PY895 ☑
46	LTC3710R	.30	4	200u	10m	Red		NRK	45m	20m	28	2.0	20m	655n	CA Multplx	E244l	PY1452
47	MS433MA	.30	4	200u	10m	Red	CA	NR	300m	20m	27	1.7 †	10m	660n		E164a	PY783
48	LTC3710P	.30	4	250u	10m	Red		NRK	30m	12m	28	2.8	20m	697n	CA Multplx	E244l	PY1452
49	MMN39240(A)	.30	4	350u	10m	Red		NR	1.6	20m	48	2.6	20m	630n		None ♦	PY1076
50	MMN39440(A)	.30	4	350u	10m	Red		NR	1.6	20m	48	2.6	20m	630n		None ♦	PY1076
51	MS433MC	.30	4	350u	20m	Red	CC	NR	300m	20m	27	2.2 †	20m	660n	Com ka	E164b	PY783
52	MMN36240(A)	.30	4	510u	10m	Orange		NR	1.6	20m	48	2.6	20m	630n		None ♦	PY1076
53	MMN36440(A)	.30	4	510u	10m	Orange		NR	1.6	20m	48	2.6	20m	630n		None ♦	PY1076
54	MMN38240(A)	.30	4	510u	10m	Yellow		NR	1.6	20m	48	3.0	20m	585n		None ♦	PY1076
55	MMN38440(A)	.30	4	510u	10m	Yellow		NR	1.6	20m	48	3.0	20m	585n		None ♦	PY1076
56	LTC3710Y	.30	4	600u	10m	Yellow		NRK	50m	16m	28	2.8	20m	585	CA Multplx	E244l	PY1452
57	LTC3710E	.30	4	750u	10m	Orange		NRK	60m	20m	28	2.8	20m	630n	CA Multplx	E244l	PY1452
58	LTC3710G	.30	4	750u	10m	Green		NRK	60m	20m	28	2.8	20m	565	CA Multplx	E244l	PY1452
59	LTC3710HR	.30	4	750u	10m	Red		NRK	60m	20m	28	2.8	20m	630n	CA Multplx	E244l	PY1452
60	ADD3401	.30	4	800u		Red		NR				2.0	200m	680n		E124K	PY1115
61	LT3382	.30	4	1.6m		Red	CA	NR				1.7	10m	660n		E164a	PY19
62	SL1452	.30	4	2.0m	6.0m	Red		N	1.3	40m	26	1.9 †	5.0m	700n		None	PY1536
63	LTF804-08	.30	8	35u	10m	Red		NR	2.0	30m	26	2.0	20m	655n		E208a	PY1396
64	LTF804-08P	.30	8	40u	10m	Red		NR	2.4	30m	26	2.0	20m	697n		E208a	PY1396
65	LTF804-12	.30	12			Red		NR								2012a	PY1396
66	LTF804-12P	.30	12	40u	10m	Red	CC	NR	2.4	25m	26	2.8	20m	697n		E2012a	PY1396
67	SL1171T	.31	1	150u	5.0m	Red	CC	NR	300m	20m	26	1.9 †	5.0m	700n		E101d	PY1476
68	SL1172T	.31	1	150u	5.0m	Red	CC	NR	300m	20m	26	1.9 †	5.0m	700n		E101b	PY1476
69	SL1171-03	.31	1	240u	5.0m	Red	CC	NR	300m	20m	27	1.9 †	5.0m	700n		E101d	PY1475
70	SL1172-03	.31	1	240u	5.0m	Red	CC	NR	300m	20m	27	1.9 †	5.0m	700n		E101b	PY1475
71	SL2171T	.31	1	290u	15m	Green	CC	NR	300m	20m	26	2.0 †	15m	565n		E101d	PY1476
72	SL2172T	.31	1	290u	15m	Green	CC	NR	300m	20m	26	2.0 †	15m	565n		E101b	PY1476
73	SL2171	.31	1	370u	15m	Green	CC	NR	300m	20m	26	2.0 †	15m	565n		E101d	PY1475
74	SL2172	.31	1	370u	15m	Green	CC	NR	300m	20m	26	2.0 †	15m	565n		E101b	PY1475
75	SL1271	.31	2	170u	5.0m	Red		N	600m	20m	27	1.9 †	5.0m	700n		E162q	PY1481
76	SL1272	.31	2	170u	5.0m	Red		N	600m	20m	27	1.9 †	5.0m	700n		E162r	PY1481
77	SL2271	.31	2	370u	15m	Green		N	600m	20m	26	2.0 †	15m	565n		E162q	PY1481
78	SL2272	.31	2	370u	15m	Green		N	600m	20m	26	2.0 †	15m	565n		E162r	PY1481
79	SL1321-01	.31	3	150u	5.0m	Red		NR	700m	15m	26	1.9 †	5.0m	700n		None	PY1495
80	SL2321-01	.31	3	200u	15m	Green		NR	1.0	20m	26	2.0 †	15m	565n		None	PY1495
81	SL1012	.31	4	220u	5.0m	Red		NRK	1.2	15m	26	1.9 †	5.0m	700n		None	PY1505
82	SL1435	.31	4	220u		Red		NRK	1.0	15m	27	1.9 †	5.0m	700n		None	PY1502
83	SL1435-01	.31	4	220u		Red		NRK	900m	15m	27	1.9 †	5.0m	700n		None	PY1503
84	SL1436-01	.31	4	220u		Red		NRK	900m	15m	27	1.9 †	5.0m	700n		None	PY1503
85	SL1475-04	.31	4	220u	5.0m	Red		NRK	1.2	15m	26	1.9 †	5.0m	700n		None	PY1504
86	SL1476-04	.31	4	220u	5.0m	Red		NRK	1.2	15m	26	1.9 †	5.0m	700n		None	PY1504
87	SL2012	.31	4	370u	15m	Green		NRK	1.6	20m	26	2.0 †	15m	565n		None	PY1505
88	SL2435	.31	4	370u		Green		NRK	1.3	20m	26	2.0 †	15m	565n		None	PY1502
89	SL2435-01	.31	4	370u		Green		NRK	1.3	20m	26	2.0 †	15m	565n		None	PY1503
90	SL2436-01	.31	4	370u		Green		NRK	1.3	20m	26	2.0 †	15m	565n		None	PY1503
91	SL2475-04	.31	4	370u	15m	Green		NRK	1.5	20m	28	2.0 †	15m	565n		None	PY1504
92	SL2476-04	.31	4	370u	15m	Green		NRK	1.5	20m	28	2.0 †	15m	565n		None	PY1504
93	SL1013	.31	4	2.0m	6.0m	Red		NR	1.2	40m	26	1.9 †	5.0m	700n		None	PY1535
94	SL1511-03	.31	5	150u	5.0m	Red		NRK	1.3	15m	26	1.9 †	5.0m	700n		None	PY1511
95	SL1512-03	.31	5	150u	5.0m	Red		NRK	1.3	15m	26	1.9 †	5.0m	700n		None	PY1511
96	SL1524	.31	5	150u	5.0m	Red		NRK	1.4	15m	26	1.9 †	5.0m	700n		None	PY1510
97	SL1572	.31	5	150u	5.0m	Red		NRK	1.2	15m	26	1.9 †	5.0m	700n		None	PY1512
98	SL1574	.31	5	150u	5.0m	Red		NRK	1.4	15m	26	1.9 †	5.0m	700n		None	PY1514
99	SL2511-03	.31	5	370u	15m	Green		NRK	1.7	20m	26	2.0 †	15m	565n		None	PY1511
100	SL2512-03	.31	5	370u	15m	Green		NRK	1.7	20m	26	2.0 †	15m	565n		None	PY1511
101	SL2524	.31	5	370u	15m	Green		NRK	1.8	20m	26	2.0 †	15m	565n		None	PY1510
102	SL2572-01K	.31	5	370u	15m	Green		NRK	1.6	20m	26	2.0 †	15m	565n		None	PY1512
103	SL2574	.31	5	370u	15m	Green		NRK	1.9	20m	26	2.0 †	15m	565n		None	PY1514
104	LTR312	.32	1	.11m	5.0m	Red	CC	NR	350m	15m	27	2.4	15m	700n	CoM Ka	E101av	PY892 ☑
105	LTR313	.32	1	.11m	5.0m	Red	CA	NR	350m	15m	27	2.4	15m	700n		E101aw	PY892 ☑
106	LTG312A	.32	1	.14m	10m	Green	CC	NR	400m	20m	27	2.5	10m	565n	Com Ka	E101av	PY892 ☑
107	LTG313A	.32	1	.14m	10m	Green	CA	NR	400m	20m	27	2.5	10m	565n		E101aw	PY892 ☑
108	TLG314A	.33	.5	140u	10m	Green	CA	NRP	200m	20m	27	2.5	10m	565n	(+/-1.)	E101g	PY168c☑
109	TLG315A	.33	.5	140u	10m	Green	CA	NRP	200m	20m	27	2.5	10m	565n	(+/-1.)	E101f	PY168c☑
110	TLR312	.33	1	110u	5.0m	Red	CC	NR	350m	15m	27	2.4	15m	700n		E101b	PY168 ☑

SYMBOLS AND CODES EXPLAINED IN INTERPRETER

35. LED CHARACTER DISPLAYS - Seven-Segment Numeric (Cont'd)

IN ORDER OF FONT AND: (1) CHAR. HEIGHT (2)NO. CHAR. (3) INTENSITY & (4) TYPE NO.

LINE No.	4 TYPE NUMBER	1 CHAR. HGHT (in)	2 NO. CHAR	3 LUMINOUS INTENSITY Iv MIN (cd)	IF TEST (A)	COLOR	CONN.	DISP NOMEN	PD RATED MAX (W)	IF RATED MAX (A)	TEMP RNGE CODE - +	FORWARD VOLTAGE VF MAX (V)	IF TEST (A)	PEAK WAVE-LENGTH λP (m)	FEATURES	DRAWINGS SCHE-MATIC	OUTLINE
1	TLR313	.33	1	110u	5.0m	Red	CC	NR	350m	15m	27	2.4	15m	700n		E101d	PY168 ☑
2	TLG312A	.33	1	140u	10m	Green	CC	NR	400m	20m	27	2.5	10m	565n		E101b	PY168b☑
3	TLG313A	.33	1	140u	10m	Green	CC	NR	400m	20m	27	2.5	10m	565n		E101d	PY168b☑
4	SLA1C	.33	1	1.0m	15m	Red	CA	NK	750m	40m	5A	2.8	15m	690m		E141y	None
5	AND4115R	.33	4	40u	40m	Red	OTHR	NB		60m	37	3.0	40m	700n		E244a	PY670 ☑
6	AND4125R	.33	4	40u	40m	Red	OTHR	NB		60m	37	3.0	40m	700n	Com Ka	E244b	PY670 ☑
7	D290PA	.35	2	180u△	10m	Red	CA	PR	350m	30m	48%	2.0	20m	660n	(+/-1.)	E101aq	PY870 ☑
8	D290PK	.35	2	180u△	10m	Red	CC	PR	350m	30m	48%	2.0	20m	660n	(+/-1.);CK	E101ar	PY870 ☑
9	D291PA	.35	2	450u△	10m	Orange	CA	PR	350m	20m	48%	3.0	20m	630n	(+/-1.)	E101aq	PY870 ☑
10	D291PK	.35	2	450u△	10m	Orange	CC	PR	350m	20m	48%	3.0	20m	630n	(+/-1.)	E101ar	PY870 ☑
11	D292PA	.35	2	450u△	10m	Green	CA	PR	350m	20m	48%	3.0	20m	560n	(+/-1.)	E101aq	PY870 ☑
12	D292PK	.35	2	450u△	10m	Green	CC	PR	350m	20m	48%	3.0	20m	560n	(+/-1.)	E101ar	PY870 ☑
13	LTS367R	.36	.5	200u	10m	Red	CC	NR	55m	25m	28	2.0	20m	655n		E101a	PY1360
14	LTS367P	.36	.5	300u	10m	Red	CC	NR	40m	15m	28	2.8	20m	697n		E101a	PY1360
15	LAC3410	.36	.5	500u△	10m△	Red	CC	NR	110m	20m	48	1.6 †	10m	655n		E101a	PY1360
16	LAC3411	.36	.5	700u△	10m△	Red	CC	NR	120m	20m	48	1.9 †	10m	695n		E101a	PY1360
17	LTS367E	.36	.5	750u	10m	Orange	CC	NR	75m	25m	28	2.8	20m	630n		E101a	PY1360
18	LTS367G	.36	.5	750u	10m	Red	CC	NR	75m	25m	28	2.8	20m	565n		E101a	PY1360
19	LTS367HR	.36	.5	750u	10m	Red	CC	NR	75m	25m	28	2.8	20m	635n		E101a	PY1360
20	LAC3413	.36	.5	2.0m△	10m△	Yellow	CC	NR	115m	20m	48	2.0 †	10m	585n		E101a	PY1360
21	LAC3412	.36	.5	2.1m△	10m△	Green	CC	NR	115m	20m	48	2.0 †	10m	565n		E101a	PY1360
22	LAC3414	.36	.5	2.1m△	10m△	Orange	CC	NR	115m	20m	48	2.0 †	10m	635n		E101a	PY1360
23	LTS360R	.36	1	200u	10m	Red	CA	NR	55m	25m	28	2.0	20m	655n		E101q	PY1360
24	LTS368R	.36	1	200u	10m	Red	CC	NVR	55m	25m	28	2.0	20m	655n		E101bj	PY1361
25	LTS360P	.36	1	300u	10m	Red	CA	NR	40m	15m	28	2.8	20m	697n		E101q	PY1360
26	LTS368P	.36	1	300u	10m	Red	CC	NVR	40m	15m	28	2.8	20m	697n		E101bj	PY1361
27	LAA3410	.36	1	500u△	10m△	Red	CA	NR	110m	20m	48	1.6 †	10m	655n		E101q	PY1360
28	LAA3411	.36	1	700u△	10m△	Red	CA	NR	120m	20m	48	1.9 †	10m	695n		E101q	PY1360
29	LTS360E	.36	1	750u	10m	Orange	CA	NR	75m	25m	28	2.8	20m	630n		E101q	PY1360
30	LTS360G	.36	1	750u	10m	Red	CA	NR	75m	25m	28	2.8	20m	565n		E101q	PY1360
31	LTS360HR	.36	1	750u	10m	Red	CA	NR	75m	25m	28	2.8	20m	635n		E101q	PY1360
32	LTS368E	.36	1	750u	10m	Orange	CC	NVR	75m	25m	28	2.8	20m	630n		E101bj	PY1361
33	LTS368G	.36	1	750u	10m	Red	CC	NVR	75m	25m	28	2.8	20m	565n		E101bj	PY1361
34	LTS368HR	.36	1	750u	10m	Red	CC	NVR	75m	25m	28	2.8	20m	635n		E101bj	PY1361
35	LAA3413	.36	1	2.0m△	10m△	Yellow	CA	NR	115m	20m	48	2.0 †	10m	585n		E101q	PY1360
36	LAA3412	.36	1	2.1m△	10m△	Green	CA	NR	115m	20m	48	2.0 †	10m	565n		E101q	PY1360
37	LAA3414	.36	1	2.1m△	10m△	Orange	CA	NR	115m	20m	48	2.0 †	10m	635n		E101q	PY1360
38	TLG307	.37	1	90u	10m	Green	CA	P		20m	37	2.5	10m	565n	COMMON A	E101i	PY104
39	TLG309	.37	1	90u	10m	Green	CC	P		20m	37	2.5	10m	565n	COMMON K	E101h	PY104
40	LTR307	.37	1	0.3m	10m	Red	CA	PP	400m	35m	27	2.8	30m	700n		E101i	PY437e
41	LTR309	.37	1	0.3m	10m	Red	CC	PP	400m	35m	27	2.8	30m	700n	CoM Ka	E101h	PY437e
42	TLR307	.37	1	300u	10m	Red	CA	P	400m	35m	27	2.8	30m	700n		E101i	PY104 ☑
43	TLR309	.37	1	300u	10m	Red	CC	P	400m	35m	27	2.8	30m	700n		E101h	PY104 ☑
44	GL4R04A	.38	.5	60u	20m	Red	CA	PR	300m	25m	27	2.0	20m	655n	(+/-1.)	E141aq	PY64m
45	SL1713	.38	9	180u	5.0m	Red		NRKE	1.1	15m	26	1.9 †	5.0m	700n		None	PY1513
46	SL2713	.38	9	400u	15m	Green		NRKE	1.5	20m	26	2.0 †	15m	565n		None	PY1513
47	HD1106O	.39	.5	1.0m	15m△	Orange	CA	PR	50m△	17m	48%	2.4	5.0m	645n	(+/-1.)	E101aq	PY870 *
48	HD1108O	.39	.5	1.0m	15m△	Orange	CC	PR	50m△	17m	48%	2.4	5.0m	645n	(+/-1.)	E101ar	PY870 *
49	HD1106Y	.39	.5	900m	15m△	Yellow	CA	PR	50m△	17m	48%	2.4	5.0m	590n	(+/-1.)	E101aq	PY870 *
50	HD1108Y	.39	.5	900m	15m△	Yellow	CC	PR	50m△	17m	48%	2.4	5.0m	590n	(+/-1.)	E101ar	PY870 *
51	HDSP3350	.39	1	200u△	2m△	Red	CA	NL	52m△	15m	48	2.5	20m	635n		E141m	PY1554
52	HDSP3351	.39	1	200u△	2m△	Red	CA	NR	52m△	15m	48	2.5	20m	635n		E141n	PY1554a
53	HDSP3353	.39	1	200u△	2m△	Red	CC	NR	52m△	15m	48	2.5	20m	635n		E141k	PY1554a
54	HDSP3356	.39	1	200u△	2m△	Red	UNIV	VR	52m△	15m	48	2.5	20m	635n		E141ay	PY1554b
55	NSG141	.39	1*	0.5m		Green	OTHR	PNR	63m	25m	48	2.5	20m	555n	Black Face	E141cs	PY1589☑
56	NSG143	.39	1*	0.5m		Green	OTHR	PNR	63m	25m	48	2.5	20m	555n	Gray Face	E141cs	PY1589☑
57	HD1105G	.39	1	1.0m	15m△	Green	CA	NR	50m△	17m	48%	2.4	5.0m	560n		E101ao	None
58	HD1105O	.39	1	1.0m△	15m△	Orange	CA	NR	50m△	18m	48%	2.4	5.0m	645n	Tr/Tf 100ns Typ	E101ao	PY870 ☑
59	HD1105R	.39	1	1.0m△	25m△	Red	CA	NR	50m△	25m	48%	2.0	10m	665n	Tr/Tf 5ns Typ	E101ao	PY870 ☑
60	HD1106G	.39	1	1.0m	15m△	Green	CA	NR	50m△	17m	48%	2.4	5.0m	560n		E101aq	None
61	HD1107G	.39	1	1.0m	15m△	Green	CC	NR	50m△	17m	48%	2.4	5.0m	560n		E101ap	None
62	HD1107O	.39	1	1.0m△	15m△	Orange	CC	NR	50m△	17m	48%	2.4	5.0m	645n	Tr/Tf 100ns Typ	E101ap	PY870 ☑
63	HD1107R	.39	1	1.0m△	25m△	Red	CC	NR	50m△	25m	48%	2.0	10m	665n	Tr/Tf 5ns Typ	E101ap	PY870 ☑
64	HD1108G	.39	1	1.0m	15m△	Green	CC	NR	50m△	17m	48%	2.4	5.0m	560n		E101ar	None
65	HG1105G	.39	1	1.0m△	15m△	Green	CA	NR	50m△	18m	48%	2.4	5.0m	560n	Tr/Tf 50ns Typ	E101ao	PY870 ☑
66	HG1107G	.39	1	1.0m△	15m△	Green	CC	NR	50m△	18m	48%	2.4	5.0m	560n	Tr/Tf 50ns Typ	E101ao	PY870 ☑
67	NSA141	.39	1*	1.5m		Orange	OTHR	PNR	63m	25m	48	2.5	20m	605n	Black Face	E141cs	PY1589☑
68	NSA143	.39	1*	1.5m		Orange	OTHR	PNR	63m	25m	48	2.5	20m	605n	Gray Face	E141cs	PY1589☑
69	NSY141	.39	1*	1.5m		Yellow	OTHR	PNR	63m	25m	48	2.5	20m	580n	Black Face	E141cs	PY1589☑
70	NSY143	.39	1*	1.5m		Yellow	OTHR	PNR	63m	25m	48	2.5	20m	580n	Gray Face	E141cs	PY1589☑
71	NSR141	.39	1*	2.0m	20m	Red	OTHR	PNR	60m	30m	48	2.0	20m	660n	Black Face	E141cs	PY1589☑
72	NSR143	.39	1*	2.0m	20m	Red	OTHR	PNR	60m	30m	48	2.0	20m	660n	Gray Face	E141cs	PY1589☑
73	SL1170	.39	1	300m		Red	CC	NR	300m	20m	27	1.9 †	5.0m	700u		E141k	PY1478
74	SL1179	.39	1	300m		Red	CA	NR	300m	20m	27	1.9 †	5.0m	700u		E141n	PY1478
75	SL2170	.39	1	800m		Green	CC	NR	300m	20m	27	2.0 †	15m	565u		E141k	PY1478
76	SL2179	.39	1	800m		Green	CA	NR	300m	20m	27	2.0 †	15m	565u		E141n	PY1478
77	HD1105Y	.39	1	900m△	15m△	Yellow	CA	NR	50m△	17m	48%	2.4	5.0m	590n	Tr/Tf 100ns Typ	E101ao	PY870 ☑
78	HD1107Y	.39	1	900m△	15m△	Yellow	CC	NR	50m△	17m	48%	2.4	5.0m	590n	Tr/Tf 100ns Typ	E101ap	PY870 ☑
79	SN713B	.39	1	580	15m			N	400m	100m	27	2.3	10m	630		None ♦	PY812
80	SN716B	.39	1	580	15m			N	400m	100m	27	2.3	10m	630		None ♦	PY812
81	LTR320	.39	2	.22m	5.0m	Red	CC	N		15m	37	2.5	15m	700n	Com Ka	E162a	PY309 ☑
82	LTR321	.39	2	.22m	5.0m	Red	CA	N		15m	37	2.5	15m	700n		E162b	PY309 ☑
83	SL1221	.39	2	220u	5.0m	Red	CA	N	600m	20m	27	1.9 †	5.0m	700n		E162b	PY1482
84	SL1222	.39	2	220u	5.0m	Red	CC	N	600m	20m	27	1.9 †	5.0m	700n		E162a	PY1482
85	LTG320	.39	2	.30m△	10m	Green	CC	N		20m	37	2.5	10m	565n	Com Ka	E162a	PY309 ☑
86	LTG321	.39	2	.30m△	10m	Green	CA	N		20m	37	2.5	10.m	565n		E162b	PY309 ☑
87	SL2221	.39	2	400u	15m	Red	CA	N	600m	20m	26	2.0 †	15m	565n		E162b	PY1482
88	SL2222	.39	2	400u	15m	Red	CC	N	600m	20m	26	2.0 †	15m	565n		E162a	PY1482
89	SL1043T	.39	4	250u	5.0m	Red		NRK	1.0	15m	26	1.9 †	5.0m	700n		None	PY1506
90	SL1044-01T	.39	4	250u	5.0m	Red		NRK	1.0	15m	26	1.9 †	5.0m	700n		None	PY1506
91	SL1044A	.39	4	300u	5.0m	Red		NRK	1.1	15m	26	1.9 †	5.0m	700n		None	PY1507
92	SL2043T	.39	4	400u	15m	Green		NRK	1.3	20m	26	2.0	15m	565n		None	PY1506
93	SL2044-01T	.39	4	400u	15m	Green		NRK	1.3	20m	26	2.0	15m	565n		None	PY1506
94	SL2044C	.39	4	480u	15m	Green		NRK	1.5	20m	26	2.0 †	15m	565n		None	PY1507
95	SL1724	.39	9	180u	5.0m	Red		NRKE	1.1	15m	26	1.9 †	5.0m	700n		None	PY1515
96	SL2724	.39	9	400u	15m	Green		NRKE	1.5	20m	26	2.0 †	15m	565n		None	PY1515
97	CMN4780A	.40	.5	200u	10m	Red	CC	NR	480m	30m	48	2.0	20m			E101a	PY1344
98	LTS4730AR	.40	.5	200u	10m	Red	UNIV	NVR	55m	25m	28	2.0	20m	655n		E141az	PY1339a
99	MAN4705	.40	.5	200u	10m	Red	OTHR	PV	400m	100m	48	2.0	20m	660n	(+/-1.); univ	E141bt	PY615a
100	MAN4705A	.40	.5	200u	10m	Red	CA	PR	360m	30m	48	2.0	20m	660n	(+/-1.);univ	E141as	PY809e
101	MAN4780A	.40	.5	200u	10m	Red	CC	NRC	480m	240m	48	2.0	20m	660n		E101a	PY809c*
102	LTS4730AP	.40	.5	300u	10m	Red	UNIV	NVR	40m	15m	28	2.8	20m	697n		E141az	PY1339a
103	CMN4980A	.40	.5	320u	10m	Red	CC	NR	600m	30m	48	2.5	20m			E101a	PY1344
104	MAN4505	.40	.5	320u	10m	Green	OTHR	PV	250m	100m	48	3.0	20m	565n	(+/-1.); univ	E141bt	PY615a
105	MAN4505A	.40	.5	320u	10m	Green	CA	PR	360m	20m	48	3.0	20m	565n	(+/-1.);univ	E141as	PY809e
106	MAN4580A	.40	.5	320u	10m	Green	CC	NRC	480m	160m	48	3.0	20m	565n		E101a	PY809c*
107	MAN4980A	.40	.5	320u	10m	Red	CC	NR	600m	240m	48	2.5	20m	635n		E101a	PY81f
108	LTS4730R	.40	.5	400u	100m	Red	UNIV	NVR								E141az	PY1363
109	LTS4780R	.40	.5	400u	10m	Red	CC	NR								E101a	PY1362
110	CMN4680A	.40	.5	510u		Orange	CC	NR	600m	30m	48	2.5	20m			E101a	PY1344

SYMBOLS AND CODES EXPLAINED IN INTERPRETER

35. LED CHARACTER DISPLAYS - Seven-Segment Numeric (Cont'd)

IN ORDER OF FONT AND: (1) CHAR. HEIGHT (2)NO. CHAR. (3) INTENSITY & (4) TYPE NO.

LINE No.	4 TYPE NUMBER	1 CHAR. HGHT (in)	2 NO. CHAR	3 LUMINOUS INTENSITY Iv MIN (cd)	IF TEST (A)	COLOR	CONN.	DISP NOMEN	PD RATED MAX (W)	IF RATED MAX (A)	TEMP RNGE CODE	FORWARD VOLTAGE VF MAX (V)	IF TEST (A)	PEAK WAVE-LENGTH λP (m)	FEATURES	DRAWINGS SCHE-MATIC	OUTLINE
1	CMN4880A	.40	.5	510u	10m	Yellow	CC	NR	600m	25m	48	3.0	20m			E101a	PY1344
2	MAN4605	.40	.5	510u	10m	Orange	OTHR	PV	250m	100m	48	2.5	20m	630n	(+/-1.); univ	E141bt	PY615a
3	MAN4605A	.40	.5	510u	10m	Orange	CA	PR	450m	30m	48	2.5	20m	630n	(+/-1.);univ	E141as	PY809e
4	MAN4630	.40	.5	510u	10m	Orange	UNIV	PV	250m	100m	48	2.5	20m	630n	(+/-1.); CA	E141ba	PY615a
5	MAN4630A	.40	.5	510u	10m	Orange	UNIV	PR	450m	30m	48	2.5	20m	630n	(+/-1.);CC	E141ba	PY809e
6	MAN4680A	.40	.5	510u	10m	Orange	CC	NRC	600m	240m	48	2.5	20m	630n		E101a	PY809c*
7	MAN4805	.40	.5	510u	10m	Yellow	OTHR	PV	250m	100m	48	3.0	20m	585n	(+/-1.); univ	E141bt	PY615a
8	MAN4805A	.40	.5	510u	10m	Yellow	CA	PR	450m	25m	48	3.0	20m	585n	(+/-1.);univ	E141as	PY809e
9	MAN4880A	.40	.5	510u	10m	Yellow	CC	NRC	600m	200m	48	3.0	20m	585n		E101a	PY809c*
10	LTS4830AY	.40	.5	650u	10m	Yellow	UNIV	NVR	60m	20m	28	2.8	20m	585n		E141az	PY1339a
11	LTS4530AG	.40	.5	800u	10m	Green	UNIV	NVR	75m	25m	28	2.8	20m	565n		E141az	PY1339a
12	LTS4630AE	.40	.5	800u	10m	Orange	UNIV	NVR	75m	25m	28	2.8	20m	630n		E141az	PY1339a
13	LTS4930AHR	.40	.5	800u	10m	Red	UNIV	NVR	75m	25m	28	2.8	20m	635n		E141az	PY1339a
14	LTS4830Y	.40	.5	1.5m	10m	Yellow	UNIV	NVR								E141az	PY1363
15	LTS4880Y	.40	.5	1.5m	10m	Yellow	CC	NR								E101a	PY1362
16	LTS4530G	.40	.5	2.0m	10m	Green	UNIV	NVR								E141az	PY1363
17	LTS4580G	.40	.5	2.0m	10m	Green	CC	NR								E101a	PY1362
18	LTS4630E	.40	.5	2.0m	10m	Orange	UNIV	NVR								E141az	PY1363
19	LTS4680E	.40	.5	2.0m	10m	Orange	CC	NR								E101a	PY1362
20	LTS4930HR	.40	.5	2.0m	10m	Red	UNIV	NVR								E141az	PY1363
21	LTS4980HR	.40	.5	2.0m	10m	Red	CC	NR								E101a	PY1362
22	GL8G04	.40	1	30u	10m	Green	CC	N	300m	15m	37	2.5	10m	555n		E141aw	PY64m
23	GL8P04	.40	1	60u	5.0m	Red	CC	N	200m	10m	37	2.5	5.0m	695n		E141aw	PY64m
24	D200PA	.40	1	180uΔ	10m	Red	CA	NR	480m	30m	48%	2.0	20m	660n		E101ao	PY870 ⊠
25	D200PK	.40	1	180uΔ	10m	Red	CC	NR	480m	30m	48%	3.0	20m	660n	Com Ka	E101ap	PY870 ⊠
26	CMN4705A	.40	1	200u		Red		PR	360m	30m	48	2.0	20m		Univ Overtl	E141bt	PY1339a
27	CMN4710A	.40	1	200u		Red	CA	NR	480m	30m	48	2.0	20m			E141n	PY1337a
28	LTS4705AR	.40	1	200u	10m	Red	OTHR	NVR	55m	25m	28	2.0	20m	655n	Univ(+/-1)	E141bt	PY1339a
29	LTS4710AR	.40	1	200u	10m	Red	CA	NR	55m	25m	28	2.0	20m	655n		E141n	PY1337a
30	LTS4740AR	.40	1	200u	10m	Red	CC	NR	55m	25m	28	2.0	20m	655n		E141o	PY1337a
31	LTS4780AR	.40	1	200u	10m	Red	OTHR	NR	55m	25m	28	2.0	20m	655n		E141a	PY1337a
32	MAN4710	.40	1	200u	10m	Red	CA	NR	400m	240m	48	2.0	20m	660n		E141n	PY615
33	MAN4710A	.40	1	200u	10m	Red	CA	NR	480m	30m	48	2.0	20m	660n		E141n	PY809c
34	MAN4740	.40	1	200u	10m	Red	CC	NR	400m	240m	48	2.0	20m	660n		E141o	PY615
35	MAN4740A	.40	1	200u	10m	Red	CC	NR	480m	30m	48	2.0	20m	660n		E141o	PY809c
36	A4011-11	.40	1	300u	10m	Red	CA	NR								E141n	PY64r
37	C4011-11	.40	1	300u	10m	Red	OTHR	NR								E141e	PY64r
38	LTS4705AP	.40	1	300u	10m	Red	OTHR	NVR	40m	15m	28	2.8	20m	697n	Univ(+/-1)	E141bt	PY1339a
39	LTS4710AP	.40	1	300u	10m	Red	CA	NR	40m	15m	28	2.8	20m	697n		E141n	PY1337a
40	LTS4740AP	.40	1	300u	10m	Red	CC	NR	40m	15m	28	2.8	20m	697n		E141o	PY1337a
41	LTS4780AP	.40	1	300u	10m	Red	OTHR	NR	40m	15m	28	2.8	20m	697n		E141a	PY1337a
42	CMN4905A	.40	1	320u	10m	Red		NPR	450m	30m	48	2.5	20m		Univ Overtl	E141bt	PY1339a
43	CMN4910A	.40	1	320u	10m	Red	CA	NR	600m	30m	48	2.5	20m			E141n	PY1337b
44	CMN4940A	.40	1	320u	10m	Red	CC	NR	600m	30m	48	2.5	20m			E141o	PY1337b
45	MAN4510	.40	1	320u	10m	Green	CA	NR	400m	160m	48	3.0	20m	565n		E141n	PY615
46	MAN4510A	.40	1	320u	10m	Green	CA	NR	480m	20m	48	3.0	20m	565n		E141n	PY809c
47	MAN4540	.40	1	320u	10m	Green	CC	NR	400m	160m	48	3.0	20m	565n		E141o	PY615
48	MAN4540A	.40	1	320u	10m	Green	CC	NR	480m	20m	48	3.0	20m	565n		E141o	PY809c
49	MAN4905A	.40	1	320u	10m	Red	OTHR	NV	450m	180m	48	2.5	20m	635n		E141bt	PY81e
50	MAN4910A	.40	1	320u	10m	Red	CA	NR	600m	240m	48	2.5	20m	635n		E141n	PY81d
51	MAN4940A	.40	1	320u	10m	Red	CC	NR	600m	240m	48	2.5	20m	635n		E141o	PY81d
52	MS141A	.40	1	350u	20m	Red	CA	NR				2.6	20m	700n		E141n	PY914b
53	MS143A	.40	1	350u	20m	Red	CA	NL				2.6	20m	700n		E141m	PY914a
54	LTS4705R	.40	1*	400u	10m	Red		NVR								E141bt	PY1363
55	LTS4710R	.40	1	400u	10m	Red	CA	NR								E141n	PY1362
56	LTS4740R	.40	1	400u	10m	Red	CC	NR								E141o	PY1362
57	SEL510	.40	1	0.4mΔ	10m	Red		NB	350m	25m	27	3.0	10m	700n		None ♦	PY771
58	SEL511	.40	1	0.4mΔ	10m	Red		NB	350m	25m	27	3.0	10m	700n		None ♦	PY771
59	SEL610	.40	1	0.4mΔ	10m	Green		NB	350m	25m	27	3.0	10m	560n		None ♦	PY771
60	SEL611	.40	1	0.4mΔ	10m	Green		NB	350m	25m	27	3.0	10m	560n		None ♦	PY771
61	A4021-11	.40	1	450u	10m	Green	CA	NR								E141n	PY64r
62	C4021-11	.40	1	450u	10m	Green	OTHR	NR								E141e	PY64r
63	D201PA	.40	1	450uΔ	10m	Orange	CA	NR	300m	20m	48%	3.0	20m	630n		E101ao	PY870 ⊠
64	D201PK	.40	1	450uΔ	10m	Orange	CC	NR	480m	20m	48%	3.0	20m	630n	Com Ka	E101ap	PY980 ⊠
65	D202PA	.40	1	450uΔ	10m	Green	CA	NR	480m	20m	48%	3.0	20m	560n		E101ao	PY870 ⊠
66	D202PK	.40	1	450uΔ	10m	Green	CC	NR	480m	20m	48%	3.0	20m	560n	Com Ka	E101ap	PY870 ⊠
67	D203PA	.40	1	450uΔ	10m	Yellow	CA	NR	480m	20m	48%	3.0	20m	590n		E101ao	PY870 ⊠
68	GL8N04	.40	1	500u	10m	Green	CC	NR		15m	37	2.5	10m	565		E141aw	PY64m
69	CMN4610A	.40	1	510u		Orange	CA	NR	600m	30m	48	2.5	20m			E141n	PY1337a
70	CMN4640A	.40	1	510u		Orange	CC	NR	600m	30m	48	2.5	20m			E141o	PY1337a
71	MAN4610	.40	1	510u	10m	Orange	CA	NR	400m	160m	48	2.5	20m	630n		E141n	PY615
72	MAN4610A	.40	1	510u	10m	Orange	CA	NR	600m	30m	48	2.5	20m	630n		E141n	PY809c
73	MAN4640	.40	1	510u	10m	Orange	CC	NR	400m	160m	48	2.5	20m	630n		E141o	PY615
74	MAN4640A	.40	1	510u	10m	Orange	CC	NR	600m	30m	48	2.5	20m	630n		E141o	PY809c
75	MAN4810	.40	1	510u	10m	Yellow	CA	NR	400m	160m	48	3.0	20m	585n		E141n	PY615
76	MAN4810A	.40	1	510u	10m	Yellow	CA	NR	600m	25m	48	3.0	20m	585n		E141n	PY809c
77	MAN4840	.40	1	510u	10m	Yellow	CC	NR	400m	160m	48	3.0	20m	585n		E141o	PY615
78	MAN4840A	.40	1	510u	10m	Yellow	CC	NR	600m	25m	48	3.0	20m	585n		E141o	PY809c
79	A4031-11	.40	1	600u	10m	Yellow	CA	NR								E141n	PY64r
80	C4031-11	.40	1	600u	10m	Yellow	OTHR	NR								E141e	PY64r
81	GL8D04	.40	1	600u	10m	Red	CC	NR		20m	37	2.2	10m	635		E141aw	PY64m
82	LTS4805AY	.40	1	650u	10m	Yellow	OTHR	NVR	60m	20m	28	2.8	20m	585n	Univ(+/-1)	E141bt	PY1339a
83	LTS4810AY	.40	1	650u	10m	Yellow	CA	NR	60m	20m	28	2.8	20m	585n		E141n	PY1337a
84	LTS4840AY	.40	1	650u	10m	Yellow	CC	NR	60m	20m	28	2.8	20m	585n		E141o	PY1337a
85	LTS4880AY	.40	1	650u	10m	Yellow	OTHR	NR	60m	20m	28	2.8	20m	585n		E141a	PY1337a
86	LAA4010	.40	1	700uΔ	10mΔ	Red		NR	110m	20m	48	1.6 †	10m	655n		E141cn	PY1433
87	LAC4010	.40	1	700uΔ	10mΔ	Red	CC	NR	110m	20m	48	1.6 †	10m	655n		E141o	PY1433
88	LTS4505AG	.40	1	800u	10m	Green	OTHR	NVR	75m	25m	28	2.8	20m	565n	Univ(+/-1)	E141bt	PY1339a
89	LTS4510AG	.40	1	800u	10m	Green	CA	NR	75m	25m	28	2.8	20m	565n		E141n	PY1337a
90	LTS4540AG	.40	1	800u	10m	Green	CC	NR	75m	25m	28	2.8	20m	565n		E141o	PY1337a
91	LTS4580AG	.40	1	800u	10m	Green	OTHR	NR	75m	25m	28	2.8	20m	565n		E141a	PY1337a
92	LTS4605AE	.40	1	800u	10m	Orange	OTHR	NVR	75m	25m	28	2.8	20m	630n	Univ(+/-1)	E141bt	PY1339a
93	LTS4610AE	.40	1	800u	10m	Orange	CA	NR	75m	25m	28	2.8	20m	630n		E141n	PY1337a
94	LTS4640AE	.40	1	800u	10m	Orange	CC	NR	75m	25m	28	2.8	20m	630n		E141o	PY1337a
95	LTS4680AE	.40	1	800u	10m	Orange	OTHR	NR	75m	25m	28	2.8	20m	630n		E141a	PY1337a
96	LTS4905AHR	.40	1	800u	10m	Red	OTHR	NVR	75m	25m	28	2.8	20m	635n	Univ(+/-1)	E141bt	PY1339a
97	LTS4910AHR	.40	1	800u	10m	Red	CA	NR	75m	25m	28	2.8	20m	635n		E141n	PY1337a
98	LTS4940AHR	.40	1	800u	10m	Red	CC	NR	75m	25m	28	2.8	20m	635n		E141o	PY1337a
99	LTS4980AHR	.40	1	800u	10m	Red	OTHR	NR	75m	25m	28	2.8	20m	635n		E141a	PY1337a
100	MG141A	.40	1	800u	20m	Green	CA	NR				3.0	20m	565n		E141n	PY914b
101	MG143A	.40	1	800u	20m	Green	CA	NL				3.0	20m	565n		E141m	PY914a
102	MY141A	.40	1	800u	20m	Yellow	CA	NR				3.0	20m	585n		E141n	PY914b
103	MY141C	.40	1	800u	20m	Yellow	CC	NR				3.0	20m	585n		E141bz	PY914b
104	MY143A	.40	1	800u	20m	Yellow	CA	NL				3.0	20m	585n		E141m	PY914a
105	MY143C	.40	1	800u	20m	Yellow	CC	NL				3.0	20m	585n		E141by	PY914a
106	A4041-11	.40	1	1.0m	10m	Orange	CA	NR								E141n	PY64r
107	A4041R11	.40	1	1.0m	10m	Red	CA	NR								E141n	PY64r
108	C4041-11	.40	1	1.0m	10m	Orange	OTHR	NR								E141e	PY64r
109	C4041R11	.40	1	1.0m	10m	Red	OTHR	NR								E141e	PY64r
110	LTS4805Y	.40	1*	1.5m	10m	Yellow		NVR								E141bt	PY1363

SYMBOLS AND CODES EXPLAINED IN INTERPRETER

35. LED CHARACTER DISPLAYS - Seven-Segment Numeric (Cont'd)

IN ORDER OF FONT AND: (1) CHAR. HEIGHT (2)NO. CHAR. (3) INTENSITY & (4) TYPE NO.

LINE No.	4 TYPE NUMBER	1 CHAR. HGHT (in)	2 NO. CHAR	3 LUMINOUS INTENSITY Iv MIN (cd)	IF TEST (A)	COLOR	CONN.	DISP NOMEN	PD RATED MAX (W)	IF RATED MAX (A)	TEMP RNGE CODE - +	FORWARD VOLTAGE VF MAX (V)	IF TEST (A)	PEAK WAVE-LENGTH λP (m)	FEATURES	DRAWINGS SCHE-MATIC	OUTLINE
1	LTS4810Y	.40	1	1.5m	10m	Yellow	CA	NR								E141n	PY1362
2	LTS4840Y	.40	1	1.5m	10m	Yellow	CC	NR								E141o	PY1362
3	LTS4505G	.40	1*	2.0m	10m	Green		NVR								E141bt	PY1363
4	LTS4510G	.40	1	2.0m	10m	Green	CA	NR								E141n	PY1362
5	LTS4540G	.40	1	2.0m	10m	Green	CC	NR								E141o	PY1362
6	LTS4605E	.40	1	2.0m	10m	Orange		NVR								E141bt	PY1363
7	LTS4610E	.40	1	2.0m	10m	Orange	CA	NR								E141n	PY1362
8	LTS4640E	.40	1	2.0m	10m	Orange	CC	NR								E141o	PY1362
9	LTS4905HR	.40	1*	2.0m	10m	Red		NVR								E141bt	PY1363
10	LTS4910HR	.40	1	2.0m	10m	Red	CA	NR								E141n	PY1362
11	LTS4940HR	.40	1	2.0m	10m	Red	CC	NR								E141o	PY1362
12	LAA4013	.40	1	2.5mΔ	10mΔ	Yellow		NR	115m	20m	48	2.0 †	10m	585n		E141cn	PY1433
13	LAC4013	.40	1	2.5mΔ	10mΔ	Yellow	CC	NR	115m	20m	48	2.0 †	10m	585n		E141o	PY1433
14	LAA4011	.40	1	3.4mΔ	10mΔ	Red		NR	120m	20m	48	1.9 †	10m	695n		E141cn	PY1433
15	LAA4012	.40	1	3.4mΔ	10mΔ	Green		NR	115m	20m	48	2.0 †	10m	565n		E141cn	PY1433
16	LAC4011	.40	1	3.4mΔ	10mΔ	Red	CC	NR	120m	20m	48	1.9 †	10m	695n		E141o	PY1433
17	LAC4012	.40	1	3.4mΔ	10mΔ	Green	CC	NR	115m	20m	48	2.0 †	10m	565n		E141o	PY1433
18	LAA4014	.40	1	3.5mΔ	10mΔ	Orange		NR	115m	20m	48	2.0 †	10m	635n		E141cn	PY1433
19	LAC4014	.40	1	3.5mΔ	10mΔ	Orange	CC	NR	115m	20m	48	2.0 †	10m	635n		E141o	PY1433
20	LTC14401A1-12	.40	1.5	35u	10m	Red		NR	2.0	30m	26	2.2	20m	655n	(+/-1.8)	E274a	PY1398
21	GL6P201	.40	2	60u	5.0m	Red	CC	NDR	200m	10m	37	2.5	5.0m	695n		E182d	PY225c
22	GL6R201	.40	2	60u	20m	Red	CC	NDR	400m	25m	37	2.0	20m	655n		E182d	PY225c
23	LTD432RC	.40	2	100u	10m	Red	CC	N	55m	25m	28	2.0	20m	655n		E162a	PY1202
24	LTD482RC	.40	2	100u	10m	Red	CA	N	55m	25m	28	2.0	20m	655n		E162b	PY1202
25	TLG320	.40	2	130u	10m	Green	UNIV	N		20m	37	2.5	10m	565n		E162i	PY500 ☑
26	TLG321	.40	2	130u	10m	Green	UNIV	N		20m	37	2.5	10m	565n		E162h	PY500 ☑
27	TLR320	.40	2	130u	5.0m	Red	CA	NC		15m	27	2.5	15m	700n		E162b	PY309 ☑
28	TLR321	.40	2	130u	5.0m	Red	CA	NC		15m	27	2.5	15m	700n		E162b	PY309 ☑
29	C313	.40	2	150u	10m	Red	CC	ND								E102a	PY500
30	A4012-11	.40	2	200u	10m	Red	CA	ND								E162b	PY1202
31	C4012-11	.40	2	200u	10m	Red	CC	ND								E162a	PY1202
32	LTD432PC	.40	2	200u	10m	Red	CC	N	40m	15m	28	2.8	20m	697n		E162a	PY1202
33	LTD482PC	.40	2	200u	10m	Red	CA	N	40m	15m	28	2.8	20m	697n		E162b	PY1202
34	MID241	.40	2	220u	20m			NR	300m	20m	28	1.7	20m	660n		None ♦	PY225c
35	A4022-11	.40	2	300u	10m	Green	CA	ND								E162b	PY1202
36	C333	.40	2	300u	10m	Green	CC	ND								E102a	PY500
37	C4022-11	.40	2	300u	10m	Green	CC	ND								E162a	PY1202
38	MS241C	.40	2	300u	10m	Red	CC	NR	300m	20m	28	1.7	10m	660n	ComKaA	E182d	PY788
39	A4032-11	.40	2	480u	10m	Yellow	CA	ND								E162b	PY1202
40	C353	.40	2	480u	10m	Yellow	CC	ND								E102a	PY500
41	C4032-11	.40	2	480u	10m	Yellow	CC	ND								E162a	PY1202
42	GL6N201	.40	2	500u	10m	Green	CC	NR		15m	37	2.5	10m	565		E182d	PY225c
43	GL6D201	.40	2	600u	10m	Red	CC	NR		20m	37	2.2	10m	635		E182d	PY225c
44	MS241A	.40	2	600u	10m	Red	CA	NR	300m	20m	28	2.2	10m	635n		E182c	PY788
45	LAA4610	.40	2	700uΔ	10mΔ	Red	CA	NR	110m	20m	48	1.6 †	10m	655n		E162b	PY1437
46	LAC4610	.40	2	700uΔ	10mΔ	Red	CC	NR	110m	20m	48	1.6 †	10m	655n		E162a	PY1437
47	MG241A	.40	2	800u	20m	Green	CA	NR				3.0	20m	565n		E182c	PY788a
48	MG241C	.40	2	800u	20m	Green	CC	NR				3.0	20m	565n		E182d	PY788a
49	MY241A	.40	2	800u	20m	Yellow	CA	NR				3.0	20m	585n		E182c	PY788a
50	MY241C	.40	2	800u	20m	Yellow	CC	NR				3.0	20m	585n		E182d	None
51	A4042-11	.40	2	1.0m	10m	Orange	CA	ND								E162b	PY1202
52	A4042R11	.40	2	1.0m	10m	Red	CA	ND								E162b	PY1202
53	C373R	.40	2	1.0m	10m	Red	CC	ND							HiEff-ComK	E102a	PY500
54	C4042-11	.40	2	1.0m	10m	Orange	CC	ND								E162a	PY1202
55	C4042R11	.40	2	1.0m	10m	Red	CC	ND								E162a	PY1202
56	LAA4613	.40	2	2.5mΔ	10mΔ	Yellow	CA	NR	115m	20m	48	2.0 †	10m	585n		E162b	PY1437
57	LAC4613	.40	2	2.5mΔ	10mΔ	Yellow	CC	NR	115m	20m	48	2.0 †	10m	585n		E162a	PY1437
58	LAA4611	.40	2	3.4mΔ	10mΔ	Red	CA	NR	120m	20m	48	1.9 †	10m	695n		E162b	PY1437
59	LAA4612	.40	2	3.4mΔ	10mΔ	Green	CA	NR	115m	20m	48	2.0 †	10m	565n		E162b	PY1437
60	LAC4611	.40	2	3.4mΔ	10mΔ	Red	CC	NR	120m	20m	48	1.9 †	10m	695n		E162a	PY1437
61	LAC4612	.40	2	3.4mΔ	10mΔ	Green	CC	NR	115m	20m	48	2.0 †	10m	565n		E162a	PY1437
62	LAA4614	.40	2	3.5mΔ	10mΔ	Orange	CA	NR	115m	20m	48	2.0 †	10m	635n		E162b	PY1437
63	LAC4614	.40	2	3.5mΔ	10mΔ	Orange	CC	NR	115m	20m	48	2.0 †	10m	635n		E162a	PY1437
64	LTC4167A1	.40	3.5*			Red	CC	NC							(18:88)	E264c	PY1397
65	TLG5001	.40	5		10mΔ	Green	OTHR	NEKM		15m	37	2.5	10m	565n		E425a	PY1211
66	TLG5002	.40	5		10mΔ	Green	OTHR	NEKM		15m	37	2.5	10m	565n		E425a	PY1211
67	TLR5001	.40	5		10mΔ	Red	OTHR	NEKM		15m	37	2.4	5.m	700n		E425a	PY1211
68	TLR5002	.40	5		10mΔ	Red	OTHR	NEKM		15m	37	2.4	5.m	700n		E425a	PY1211
69	HP5082-7666	.41	.5	250uΔ	5.0m	Yellow	UNIV	PRV	300m	20m	48	2.5	20m	583n	(+/-1.); univ	E141ay	PY54b ☑
70	HP5082-7656	.41	.5	300uΔ	5.0m	Red	UNIV	PRV	300m	20m	48	2.5	20m	635n	(+/-1.); univ	E141ay	PY54b ☑
71	HP5082-7756	.41	.5	400uΔ	20m	Red	UNIV	PRV	65m	25m	48	2.0	20m	655n	(+/-1.); univ	E141ay	PY54e ☑
72	5082-7756	.41	1	700u	20m	Red	UNIV	PV	65mΔ	25m	48	2.0	20m	655n		E141ag	PY54e
73	5082-7676	.41	1	780u	20m	Red	UNIV	PV	81mΔ	25m	48	2.5	20m	565n		E141ag	PY54e
74	HDSP3736	.41	1	1.5mΔ	100m	Red	UNIV	PV	105mΔ	40m	48	3.5	100m	635n		E141ay	PY54b ☑
75	HDSP4136	.41	1	1.5mΔ	100m	Yellow	UNIV	PV	105mΔ	40m	48	3.5	100m	583n		E141ay	PY54b ☑
76	5082-7656	.41	1	3.0m	20m	Red	UNIV	PV	81mΔ	25m	48	2.5	20m	635n		E141ag	PY54e
77	D380PK	.43	.5	280uΔ	10m	Red	CC	PR	380m	35m	48%	2.0	20m	660n	(+/-1.)	E101as	PY997 ☑
78	TLR342	.43	1		10m	Red	CC	NR		20m	27	2.5	10m	700n		E141k	PY60
79	TLR343	.43	1		10m	Red	CA	NR		20m	27	2.5	10m	700n		E141m	PY60
80	TLR344	.43	1		10m	Red	UNIV	NRV		20m	27	2.5	10m	700n		E141ay	PY60
81	TLR345	.43	1		10m	Red	CA	NL		20m	27	2.5	10m	700n		E141m	PY60
82	LN514YA	.43	1	180u	10m	Orange	CA	NR	50m	20m	38%	2.8	20m	590n		E141n	PY520a
83	LN514YK	.43	1	180u	10m	Orange	CC	NR	50m	20m	38%	2.8	20m	590n		E141aw	PY520a
84	TDSR4130	.43	1	180uΔ	10m	Red	CA	NR	480m	30m	48%	2.0	20m	660n	DP on Left	E101n	PY1364☑
85	TDSR4150	.43	1	180uΔ	10m	Red	CA	NR	480m	30m	48%	2.0	20m	660n	DP on Right	E101n	PY1364☑
86	TDSR4160	.43	1	180uΔ	10m	Red	CC	NR	480m	30m	48%	2.0	20m	660n	DP on Right	E101n	PY1364☑
87	LTS7751R	.43	1	200u	10m	Red		NB	55m	25m	28	2.0	20m	655n		E141cf	PY1364
88	LTS7756R	.43	1	200u	10m	Red		NVB	55m	25m	28	2.0	20m	655n	Univ(+/-1)	E141bf	PY1365
89	LTS7760R	.43	1	200u	10m	Red		NR	55m	25m	28	2.0	20m	655n		E141cg	PY1364
90	5082-7660	.43	1	250uΔ	5.0m	Yellow	CA	NLC		30m	48	2.5	20m	583n		E141m	PY1235
91	5082-7661	.43	1	250uΔ	5.0m	Yellow	CA	NRC		30m	48	2.5	20m	583n		E141n	PY1235
92	5082-7663	.43	1	250uΔ	5.0m	Yellow	CC	NRC		30m	48	2.5	20m	583n		E141k	PY1235
93	5082-7666	.43	1	250uΔ	5.0m	Yellow		PRM		30m	48	2.5	20m	585n		E141bf	PY1236
94	5082-7670	.43	1	250uΔ	5.0m	Green	CA	NLC		30m	48	2.5	20m	565n		E141m	PY1235
95	5082-7671	.43	1	250uΔ	5.0m	Green	CA	NRC		30m	48	2.5	20m	565n		E141n	PY1235
96	5082-7673	.43	1	250uΔ	5.0m	Green	CC	NRC		30m	48	2.5	20m	565n		E141k	PY1235
97	A4311-11	.43	1	250u	10m	Red	CC	NB								E141aw	PY60m
98	C4311-11	.43	1	250u		Red		NR								E141aw	PY60m
99	S4311-11	.43	1	250u		Red		PR							Univ +/- 1	E141ay	PY60f
100	5082-7650	.43	1	300u	5.0m	Red		NL	400m	20m	48	2.5	20m	635n		None	None
101	5082-7651	.43	1	300u	5.0m	Red		NR	400m	20m	48	2.5	20m	635n		None	None
102	5082-7653	.43	1	300u	5.0m	Red		NR	400m	20m	48	2.5	20m	635n		None	None
103	A4321-11	.43	1	300u	10m	Green		NB								E141aw	PY60m
104	C4321-11	.43	1	300u		Green		NR								E141aw	PY60m
105	LN514RA	.43	1	300u	5.0m	Red	CA	NR	50m	20m	27	2.1 †	20m	700n		E141n	PY520a
106	LN514RK	.43	1	300u	5.0m	Red	CC	NR	50m	20m	27	2.1 †	20m	700n		E141aw	PY520a
107	LTS7751P	.43	1	300u	10m	Red	CA	NB	40m	15m	28	2.8	20m	697n		E141cf	PY1364
108	LTS7756P	.43	1	300u	10m	Red	CC	NVB	40m	15m	28	2.8	20m	697n	Univ(+/-1)	E141cg	PY1589
109	LTS7760P	.43	1	300u	10m	Red	UNIV	NR	40m	15m	28	2.8	20m	697n		E141bf	PY1364
110	MG141C	.43	1	300u	20m	Green	CC	NR	300m	20m	27	2.2	20m	565n		E141bz	PY914

SYMBOLS AND CODES EXPLAINED IN INTERPRETER

35. LED CHARACTER DISPLAYS - Seven-Segment Numeric (Cont'd)

IN ORDER OF FONT AND: (1) CHAR. HEIGHT (2)NO. CHAR. (3) INTENSITY & (4) TYPE NO.

LINE No.	4 TYPE NUMBER	1 CHAR. HGHT (in)	2 NO. CHAR	3 LUMINOUS INTENSITY Iv MIN (cd)	IF TEST (A)	COLOR	CONN.	DISP NOMEN	PD RATED MAX (W)	IF RATED MAX (A)	TEMP RNGE CODE - +	FORWARD VOLTAGE VF MAX (V)	IF TEST (A)	PEAK WAVE-LENGTH λP (m)	FEATURES	DRAWINGS SCHE-MATIC	OUTLINE
1	MG143C	.43	1	300u	20m	Green	CC	NL	300m	20m	27	2.2	20m	565n		E141ca	PY914
2	MS141C	.43	1	300u	20m	Red	CC	NR	300m	20m	27	2.2	20m	635n		E141bz	PY914
3	MS143C	.43	1	300u	20m	Red	CC	NL	300m	20m	27	2.2	20m	635n		E141ca	PY914
4	S4321-11	.43	1	300u		Green		PR							Univ +/- 1	E141ay	PY60f
5	HD1106R	.43	1	350u	10mΔ	Red	CA	NR	50mΔ	25m	48%	2.0	10m	665n		E101aq	PY870 *
6	HD1108R	.43	1	350u	10mΔ	Red	CC	NR	50mΔ	25m	48%	2.0	10m	665n		E101ar	PY870 *
7	5082-7750	.43	1	400u	20m	Red		NL	336m	25m	48	2.0	20m	655n		None	None
8	5082-7751	.43	1	400u	20m	Red		NR	336m	25m	48	2.0	20m	655n		None	None
9	5082-7760	.43	1	400u	20m	Red		NR	336m	25m	48	2.0	20m	655n		None	None
10	A4331-11	.43	1	400u	10m	Yellow		NB								E141aw	PY60m
11	AND4305GAL	.43	1	0.4m	20m	Green	UNIV	FV		20m	28	2.5	10m	555n		E141ay	PY553
12	AND4305GCL	.43	1	0.4m	20m	Green	UNIV	FV		20m	28	2.5	10m	555n		E141ay	PY553
13	AND4310GAL	.43	1	0.4m	20m	Green	CA	NB		20m	28	2.5	10m	555n		E141cf	PY553
14	AND4310GCL	.43	1	0.4m	20m	Green	CC	NB		20m	28	2.5	10m	555n		E141cg	PY553
15	AND4310OAL	.43	1	0.4m	20m	Orange	CA	NB		20m	28	2.5	10m	635n		E141cf	PY553
16	C4331-11	.43	1	400u		Yellow		NR								E141aw	PY60m
17	HP5082-7660	.43	1	400uΔ	5.0m	Yellow	CA	NL	81mΔ	20m	48	2.5	20m	583n		E141am	PY54a ☑
18	HP5082-7661	.43	1	400uΔ	5.0m	Yellow	CA	NR	81mΔ	20m	48	2.5	20m	583n		E141ar	PY54a ☑
19	HP5082-7663	.43	1	400uΔ	5.0m	Yellow	CC	NR	81mΔ	20m	48	2.5	20m	583n		E141k	PY54a ☑
20	S4331-11	.43	1	400u		Yellow		PR							Univ +/- 1	E141ay	PY60f
21	TDSG4130	.43	1	450uΔ	10m	Green	CA	NR	480m	20m	48%	3.0	20m	660n	DP on Left	E101n	PY1364☑
22	TDSG4150	.43	1	450uΔ	10m	Green	CA	NR	480m	20m	48%	3.0	20m	660n	DP on Right	E101n	PY1364☑
23	TDSG4160	.43	1	450uΔ	10m	Green	CC	NR	480m	20m	48%	3.0	20m	660n	DP on Right	E101n	PY1364☑
24	TDSO4130	.43	1	450uΔ	10m	Orange	CA	NR	480m	20m	48%	3.0	20m	660n	DP on Left	E101n	PY1364☑
25	TDSO4150	.43	1	450uΔ	10m	Orange	CA	NR	480m	20m	48%	3.0	20m	660n	DP on Right	E101n	PY1364☑
26	TDSO4160	.43	1	450uΔ	10m	Orange	CC	NR	480m	20m	48%	3.0	20m	660n	DP on Right	E101n	PY1364☑
27	TDSY4130	.43	1	450uΔ	10m	Yellow	CA	NR	480m	20m	48%	3.0	20m	660n	DP on Left	E101n	PY1364☑
28	TDSY4150	.43	1	450uΔ	10m	Yellow	CA	NR	480m	20m	48%	3.0	20m	660n	DP on Right	E101n	PY1364☑
29	TDSY4160	.43	1	450uΔ	10m	Yellow	CC	NR	480m	20m	48%	3.0	20m	660n	DP on Right	E101n	PY1364☑
30	LN514GA	.43	1	500u	10m	Green	CA	NR	50m	20m	27	2.1 †	20m	560n		E141n	PY520a
31	LN514GK	.43	1	500u	10m	Green	CC	NR	50m	20m	27	2.1 †	20m	560n		E141aw	PY520a
32	NAG141	.43	1*	0.5m		Green	CA	NR	63m	25m	48	2.5	20m	555n	Black Face	E141n	PY1554☑
33	NAG143	.43	1*	0.5m		Green	CA	NR	63m	25m	48	2.5	20m	555n	Gray Face	E141n	PY1554☑
34	NKG141	.43	1*	0.5m		Green	CC	NR	63m	25m	48	2.5	20m	555n	Black Face	E141k	PY1554☑
35	NKG143	.43	1*	0.5m		Green	CC	NR	63m	25m	48	2.5	20m	555n	Gray Face	E141k	PY1554☑
36	TLG342	.43	1	0.5mΔ	10mΔ	Green	CC	NR		20m	27	2.5	10m	565n		E141k	PY60
37	TLG343	.43	1	0.5mΔ	10mΔ	Green	CA	NR		20m	27	2.5	10m	565n		E141m	PY60
38	TLG344	.43	1	0.5mΔ	10mΔ	Green	UNIV	NRV		20m	27	2.5	10m	565n		E141ay	PY60
39	TLG345	.43	1	0.5mΔ	10mΔ	Green	CA	NL		20m	27	2.5	10m	565n		E141m	PY60
40	HP5082-7650	.43	1	550uΔ	5.0m	Red	CA	NL	81mΔ	20m	48	2.5	20m	635n		E141am	PY54a ☑
41	HP5082-7651	.43	1	550uΔ	5.0m	Red	CA	NR	81mΔ	20m	48	2.5	20m	635n		E141ar	PY54a ☑
42	HP5082-7653	.43	1	550uΔ	5.0m	Red	CC	NR	81mΔ	20m	48	2.5	20m	635n		E141k	PY54a ☑
43	AND4305HAL	.43	1	0.6m	20m	Red	UNIV	FV		20m	28	2.0	20m	655n		E141ay	PY553
44	AND4305HCL	.43	1	0.6m	20m	Red	UNIV	FV		20m	28	2.0	20m	655n		E141ay	PY553
45	AND4305RAL	.43	1	0.6m	20m	Red	UNIV	FV		20m	28	2.0	20m	655n		E141ay	PY553
46	AND4305RCL	.43	1	0.6m	20m	Red	UNIV	FV		20m	28	2.0	20m	655n		E141ay	PY553
47	AND4310HAL	.43	1	0.6m	20m	Red	CA	NB		20m	28	2.0	20m	655n		E141cf	PY553
48	AND4310HCL	.43	1	0.6m	20m	Red	CC	NB		20m	28	2.0	20m	655n		E141cg	PY553
49	AND4310RAL	.43	1	0.6m	20m	Red	CA	NB		20m	28	2.0	20m	655n		E141cf	PY553
50	AND4310RCL	.43	1	0.6m	20m	Red	CC	NB		20m	28	2.0	20m	655n		E141cg	PY553
51	AND4305OAL	.43	1	0.7m	20m	Orange	UNIV	FV		20m	28	2.5	10m	635n		E141ay	PY553
52	AND4305OCL	.43	1	0.7m	20m	Orange	UNIV	FV		20m	28	2.5	10m	635n		E141ay	PY553
53	AND4305YAL	.43	1	0.7m	20m	Yellow	UNIV	FV		20m	28	2.5	10m	585n		E141ay	PY553
54	AND4305YCL	.43	1	0.7m	20m	Yellow	UNIV	FV		20m	28	2.5	10m	585n		E141ay	PY553
55	AND4310OCL	.43	1	0.7m	20m	Orange	CC	NB		20m	28	2.5	10m	635n		E141cg	PY553
56	AND4310YAL	.43	1	0.7m	20m	Yellow	CA	NB		20m	28	2.5	10m	585n		E141cf	PY553
57	AND4310YCL	.43	1	0.7m	20m	Yellow	CC	NB		20m	28	2.5	10m	585n		E141cg	PY553
58	HP5082-7750	.43	1	700uΔ	20m	Red	CA	NL	65mΔ	25m	48	2.0	20m	655n		E141am	PY54d ☑
59	HP5082-7751	.43	1	700uΔ	20m	Red	CA	NR	65mΔ	25m	48	2.0	20m	655n		E141ar	PY54c ☑
60	HP5082-7760	.43	1	700uΔ	20m	Red	CC	NR	65mΔ	25m	48	2.0	20m	655n		E141k	PY54c ☑
61	LAA4110	.43	1	700uΔ	10mΔ	Red	CA	NL	110m	20m	48	1.6 †	10m	655n		E141m	PY1434
62	LAA4210	.43	1	700uΔ	10mΔ	Red	CA	NR	110m	20m	48	1.6 †	10m	655n		E141n	PY1434
63	LAC4110	.43	1	700uΔ	10mΔ	Red		NR	110m	20m	48	1.6 †	10m	655n		E141co	PY1434
64	LTS7661YN	.43	1	700u	10m	Yellow	CA	NB	60m	20m	28	2.8	20m	585n		E141cf	PY1364
65	LTS7663YN	.43	1	700u	10m	Yellow	UNIV	NR	60m	20m	28	2.8	20m	585n		E141bf	PY1364
66	LTS7666YN	.43	1	700u	10m	Yellow	CC	NVB	60m	20m	28	2.8	20m	585n	Univ(+/-1)	E141cg	PY1589
67	LTS3731E	.43	1	800u	10m	Orange		NB	75m	25m	28	2.8	20m	630n		E141cf	PY1364
68	LTS3733E	.43	1	800u	10m	Orange		NR	75m	25m	28	2.8	20m	630n		E141cg	PY1364
69	LTS3736E	.43	1	800u	10m	Orange		NVB	75m	25m	28	2.8	20m	630n	Univ(+/-1)	E141bf	PY1365
70	LTS7651HR	.43	1	800u	10m	Red		NB	75m	25m	28	2.8	20m	635n		E141cf	PY1364
71	LTS7653HR	.43	1	800u	10m	Red		NR	75m	25m	28	2.8	20m	635n		E141cg	PY1364
72	LTS7656HR	.43	1	800u	10m	Red		NVB	75m	25m	28	2.8	20m	635n	Univ(+/-1)	E141bf	PY1365
73	LTS7671GN	.43	1	800u	10m	Red	CA	NB	75m	25m	28	2.8	20m	565n		E141cf	PY1364
74	LTS7673GN	.43	1	800u	10m	Red	UNIV	NR	75m	25m	28	2.8	20m	565n		E141bf	PY1364
75	LTS7676GN	.43	1	800u	10m	Green	CC	NVB	75m	25m	28	2.8	20m	565n	Univ(+/-1)	E141cg	PY1589
76	A4341-11	.43	1	1.0m	10m	Orange		NB								E141aw	PY60m
77	A4341R11	.43	1	1.0m	10m	Red	CC	NB								E141aw	None
78	C4341-11	.43	1	1.0m		Orange		NR								E141aw	PY60m
79	C4341R11	.43	1	1.0m		Red	CC	NR								E141aw	None
80	DL7650O	.43	1*	1.0mΔ	15mΔ	Orange	CA	NL	50mΔ	17m	48%	2.4	5.0m	645n	Tr & Tf 100ns	E141am	PY15a ☑
81	DL7651O	.43	1*	1.0m	15mΔ	Orange	CA	NR	50mΔ	17m	48%	2.4	5.0m	645n	Tr & Tf 100ns	E141ar	PY15a ☑
82	DL7653O	.43	1*	1.0m	15mΔ	Orange	CC	NR	50mΔ	17m	48%	2.4	5.0m	645n	Tr & Tf 100ns	E141k	PY15a
83	DL7670G	.43	1*	1.0mΔ	15mΔ	Green	CA	NL	50mΔ	17m	48%	2.4	5.0m	560n	Tr & Tf 50ns	E141am	PY15a ☑
84	DL7671G	.43	1*	1.0mΔ	15mΔ	Green	CA	NR	50mΔ	17m	48%	2.4	5.0m	560n	Tr & Tf 50ns	E141ar	PY15a ☑
85	DL7673G	.43	1*	1.0mΔ	15mΔ	Green	CC	NR	50mΔ	17m	48%	2.4	50m	560n	Tr & Tf 50ns	E141k	PY15a ☑
86	DL7750R	.43	1*	1.0mΔ	25mΔ	Red	CA	NL	50mΔ	25m	48%	2.0	10m	665n	Tr & Tf 5ns	E141am	PY15a ☑
87	DL7751R	.43	1*	1.0mΔ	25mΔ	Red	CA	NR	50mΔ	25m	48%	2.0	10m	665n	Tr & Tf 5ns	E141ar	PY15a ☑
88	DL7760R	.43	1*	1.0mΔ	25mΔ	Red	CC	NR	50mΔ	25m	48%	2.0	10m	665n	Tr & Tf 5ns	E141k	PY15a ☑
89	S4341-11	.43	1	1.0m		Orange		PR							Univ +/- 1	E141ay	PY60f
90	S4341R11	.43	1	1.0m		Red	UNIV	PR							Univ +/-1	E141ay	None
91	LN514OA	.43	1	1.2m	10m	Orange	CA	NR	50m	20m	38%	2.8	20m	630n		E141n	PY520a
92	LN514OK	.43	1	1.2m	10m	Orange	CC	NR	50m	20m	38%	2.8	20m	630n		E141aw	PY520a
93	HDSP4600	.43	1	1.3m	10m	Green	CA	NL	105mΔ	30m	48	2.5	10m	566n		E141r	PY553
94	HDSP4601	.43	1	1.3m	10m	Green	CA	NR	105mΔ	30m	48	2.5	10m	566n		E141n	PY553
95	HDSP4603	.43	1	1.3m	10m	Green	CC	NR	105mΔ	30m	48	2.5	10m	566n		E141k	PY553
96	HDSP4606	.43	1	1.3m	10m	Green	UNIV	NR	105mΔ	30m	48	2.5	10m	566n		E141ay	PY554
97	HDSP3730	.43	1	1.5mΔ	100m	Red	CA	NL	105mΔ	40m	48	3.5	100m	635n		E141ar	PY54a ☑
98	HDSP3731	.43	1	1.5mΔ	100m	Red	CA	NR	105mΔ	40m	48	3.5	100m	635n		E141am	PY54 ☑
99	HDSP3733	.43	1	1.5mΔ	100m	Red	CC	NR	105mΔ	40m	48	3.5	100m	635n		E141k	PY54 ☑
100	HDSP4130	.43	1	1.5mΔ	100m	Yellow	CA	NL	105mΔ	40m	48	3.5	100m	583n		E141am	PY54a ☑
101	HDSP4131	.43	1	1.5mΔ	100m	Yellow	CA	NR	105mΔ	40m	48	3.5	100m	583n		E141ar	PY54 ☑
102	HDSP4133	.43	1	1.5mΔ	100m	Yellow	CC	NR	105mΔ	40m	48	3.5	100m	583n		E141k	PY54 ☑
103	NAA141	.43	1*	1.5m		Orange	CA	NR	63m	25m	48	2.5	20m	605n	Black Face	E141n	PY1554☑
104	NAA143	.43	1*	1.5m		Orange	CA	NR	63m	25m	48	2.5	20m	605n	Gray Face	E141n	PY1554☑
105	NAY141	.43	1*	1.5m		Yellow	CA	NR	63m	25m	48	2.5	20m	580n	Black Face	E141n	PY1554☑
106	NAY143	.43	1*	1.5m		Yellow	CA	NR	63m	25m	48	2.5	20m	580n	Gray Face	E141n	PY1554☑
107	NKA141	.43	1*	1.5m		Orange	CC	NR	63m	25m	48	2.5	20m	605n	Black Face	E141k	PY1554☑
108	NKA143	.43	1*	1.5m		Orange	CC	NR	63m	25m	48	2.5	20m		Gray Face	E141k	PY1554
109	NKY141	.43	1*	1.5m		Yellow	CC	NR	63m	25m	48	2.5	20m	580n	Black Face	E141k	PY1554☑
110	NKY143	.43	1*	1.5m		Yellow	CC	NR	63m	25m	48	2.5	20m	580n	Gray Face	E141k	PY1554☑

SYMBOLS AND CODES EXPLAINED IN INTERPRETER

35. LED CHARACTER DISPLAYS - Seven-Segment Numeric (Cont'd)

IN ORDER OF FONT AND: (1) CHAR. HEIGHT (2)NO. CHAR. (3) INTENSITY & (4) TYPE NO.

LINE No.	4 TYPE NUMBER	1 CHAR. HGHT (in)	2 NO. CHAR	3 LUMINOUS INTENSITY Iv MIN (cd)	IF TEST (A)	COLOR	CONN.	DISP NOMEN	PD RATED MAX (W)	IF RATED MAX (A)	TEMP RNGE CODE - +	FORWARD VOLTAGE VF MAX (V)	IF TEST (A)	PEAK WAVE-LENGTH λP (m)	FEATURES	DRAWINGS SCHE-MATIC	OUTLINE
1	NAR141	.43	1*	2.0m	20m	Red	CA	NR	60m	30m	48	2.0	20m	660n	Black Face	E141n	PY1554☑
2	NAR143	.43	1*	2.0m	20m	Red	CA	NR	60m	30m	48	2.0	20m	660n	Gray Face	E141n	PY1554☑
3	NKR141	.43	1*	2.0m	20m	Red	CC	NR	60m	30m	48	2.0	20m	660n	Black Face	E141k	PY1554☑
4	NKR143	.43	1*	2.0m	20m	Red	CC	NR	60m	30m	48	2.0	20m	660n	Gray Face	E141k	PY1554☑
5	LTS7661Y	.43	1	2.5m	20m	Yellow		NB								E141cf	PY1364
6	LTS7663Y	.43	1	2.5m	20m	Yellow		NR								E141cg	PY1364
7	LTS7666Y	.43	1*	2.5m	20m	Yellow		NVR								E141bf	PY1365
8	LAA4113	.43	1	2.6m△	10m△	Yellow	CA	NL	115m	20m	48	2.0 †	10m	585n		E141m	PY1434
9	LAA4213	.43	1	2.6m△	10m△	Yellow	CA	NR	115m	20m	48	2.0 †	10m	585n		E141n	PY1434
10	LAC4113	.43	1	2.6m△	10m△	Yellow		NR	115m	20m	48	2.0 †	10m	585n		E141co	PY1434
11	LAA4111	.43	1	3.4m△	10m△	Red	CA	NL	120m	20m	48	1.9 †	10m	695n		E141m	PY1434
12	LAA4112	.43	1	3.4m△	10m△	Green	CA	NL	115m	20m	48	2.0 †	10m	565n		E141m	PY1434
13	LAA4211	.43	1	3.4m△	10m△	Red	CA	NR	120m	20m	48	1.9 †	10m	695n		E141n	PY1434
14	LAA4212	.43	1	3.4m△	10m△	Green	CA	NR	115m	20m	48	2.0 †	10m	565n		E141n	PY1434
15	LAC4111	.43	1	3.4m△	10m△	Red		NR	120m	20m	48	1.9 †	10m	695n		E141co	PY1434
16	LAC4112	.43	1	3.4m△	10m△	Green		NR	115m	20m	48	2.0 †	10m	565n		E141co	PY1434
17	LAA4114	.43	1	3.5m△	10m△	Orange	CA	NL	115m	20m	48	2.0 †	10m	635n		E141m	PY1434
18	LAA4214	.43	1	3.5m△	10m△	Orange	CA	NR	115m	20m	48	2.0 †	10m	635n		E141n	PY1434
19	LAC4114	.43	1	3.5m△	10m△	Orange		NR	115m	20m	48	2.0 †	10m	635n		E141co	PY1434
20	LTS7671G	.43	1	3.5m	20m	Green		NB								E141cf	PY1364
21	LTS7673G	.43	1	3.5m	20m	Green		NR								E141cg	PY1364
22	LTS7676G	.43	1*	3.5m	20m	Green		NVR								E141bf	PY1365
23	DL7660Y	.43	1*	900m△	15m△	Yellow	CA	NL	50m△	17m	48%	2.4	5.0m	590n	Tr & Tf 100ns	E141am	PY15a ☑
24	DL7661Y	.43	1*	900m△	15m△	Yellow	CA	NR	50m△	17m	48%	2.4	5.0m	590n	Tr & Tf 100ns	E141ar	PY15a ☑
25	DL7663Y	.43	1*	900m△	15m△	Yellow	CC	NR	50m△	17m	48%	2.4	5.0m	590n	Tr & Tf 100ns	E141k	PY15a ☑
26	LN524RA	.43	2	300u	10m	Red	CA	NR	50m	20m	27	2.1 †	20m	700n		E182p	PY225d
27	LN524RK	.43	2	300u	10m	Red	CC	NR	50m	20m	27	2.1 †	20m	700n		E182d	PY225d
28	LN524YA	.43	2	300u	10m	Orange	CA	NR	50m	20m	38%	2.8	20m	590n		E182p	PY225d
29	LN524YK	.43	2	300u	10m	Orange	CC	NR	50m	20m	38%	2.8	20m	590n		E182d	PY225d
30	LN524GA	.43	2	500u	10m	Green	CA	NR	50m	20m	27	2.1 †	20m	560n		E182p	PY225d
31	LN524GK	.43	2	500u	10m	Green	CC	NR	50m	20m	27	2.1 †	20m	560n		E182d	PY225d
32	NAG241	.43	2*	0.5m		Green	CA	NR	63m	25m	48	2.5	20m	555n	Black Face	E182c	PY225 ☑
33	NAG243	.43	2*	0.5m		Green	CA	NR	63m	25m	48	2.5	20m	555n	Gray Face	E182c	PY225 ☑
34	NKG241	.43	2*	0.5m		Green	CC	NR	63m	25m	48	2.5	20m	555n	Black Face	E182d	PY225 ☑
35	NKG243	.43	2*	0.5m		Green	CC	NR	63m	25m	48	2.5	20m	555n	Gray Face	E182d	PY225 ☑
36	DL7656O	.43	2*	1.0m△	15m△	Orange	UNIV	PBV	50m△	17m	48%	2.4	5.0m	645n	Tr & Tf 100ns	E141ay	PY1365☑
37	DL7676G	.43	2*	1.0m△	15m△	Green	UNIV	PBV	50m△	17m	48%	2.4	5.0m	560n	Tr & Tf 50ns	E141ay	PY1365☑
38	DL7756R	.43	2*	1.0m△	25m△	Red	UNIV	PBV	50m△	25m	48%	2.0	10m	665n	Tr & Tf 5ns	E141ay	PY1365☑
39	LN5240A	.43	2	1.2m	10m	Orange	CA	NR	60m	20m	27	2.1 †	20m	630n		E182p	PY225d
40	LN5240K	.43	2	1.2m	10m	Orange	CC	NR	60m	20m	27	2.1 †	20m	630n		E182d	PY225d
41	LN5260A	.43	2	1.2m	10m	Orange	CA	NR	60m	20m	27	2.1 †	20m	630n		E182p	PY225d
42	LN5260K	.43	2	1.2m	10m	Orange	CC	NR	60m	20m	27	2.1 †	20m	630n		E182d	PY225d
43	NAA241	.43	2*	1.5m		Orange	CA	NR	63m	25m	48	2.5	20m	605n	Black Face	E182c	PY225 ☑
44	NAA243	.43	2*	1.5m		Orange	CA	NR	63m	25m	48	2.5	20m	605n	Gray Face	E182c	PY225 ☑
45	NAY241	.43	2*	1.5m		Yellow	CA	NR	63m	25m	48	2.5	20m	580n	Black Face	E182c	PY225 ☑
46	NAY243	.43	2*	1.5m		Yellow	CA	NR	63m	25m	48	2.5	20m	580n	Gray Face	E182c	PY225 ☑
47	NKA241	.43	2*	1.5m		Orange	CC	NR	63m	25m	48	2.5	20m	605n	Black Face	E182d	PY225 ☑
48	NKA243	.43	2*	1.5m		Orange	CC	NR	63m	25m	48	2.5	20m	605n	Gray Face	E182d	PY225 ☑
49	NKY241	.43	2*	1.5m		Yellow	CC	NR	63m	25m	48	2.5	20m	580n	Black Face	E182d	PY225 ☑
50	NKY243	.43	2*	1.5m		Yellow	CC	NR	63m	25m	48	2.5	20m	580n	Gray Face	E182d	PY225 ☑
51	NAR241	.43	2*	2.0m	20m	Red	CA	NR	60m	30m	48	2.0	20m	660n	Black Face	E182c	PY225 ☑
52	NAR243	.43	2*	2.0m	20m	Red	CA	NR	60m	30m	48	2.0	20m	660n	Gray Face	E182c	PY225 ☑
53	NKR241	.43	2*	2.0m	20m	Red	CC	NR	60m	30m	48	2.0	20m	660n	Black Face	E182d	PY225 ☑
54	NKR243	.43	2*	2.0m	20m	Red	CC	NR	60m	30m	48	2.0	20m	660n	Gray Face	E182d	PY225 ☑
55	DL7666Y	.43	2*	900m△	15m△	Yellow	UNIV	PBV	50m△	17m	48%	2.4	5.0m	590n	Tr & Tf 100ns	E141ay	PY1365☑
56	S84DO/A	.43	4			Red		NB	400m		27	2.0	20m			None	PY680
57	S84DO/B	.43	4			Red		NB	400m		28%	1.7	5.0m			None	PY680
58	D381PA	.44	.5	700u△	10m	Orange	CA	AER	380m	25m	48%	3.0	20m	630n		E101aa	PY997 ☑
59	D381PK	.44	.5	700u△	10m	Orange	CC	PR	380m	25m	48%	3.0	20m	630n	(+/-1.)	E101as	PY997 ☑
60	D382PA	.44	.5	700u△	10m	Green	CA	PR	380m	25m	48%	3.0	20m	560n	(+/-1.)	E101aa	PY997 ☑
61	D382PK	.44	.5	700u△	10m	Green	CC	PR	380m	25m	48%	3.0	20m	560n	(+/-1.)	E101as	PY997 ☑
62	D380PA	.44	2	280u△	10m	Red	CA	PR	380m	35m	48%	2.0	20m	660n	(+/-1.)CA	E101aa	PY997 ☑
63	ALS330V	.45	3	.05m	3.0m			NDT		5.0m	25	1.8	3.0m			None	PY171a
64	ALS329L	.46	4	.05m	3.0m			NDT		5.0m	25	1.8	3.0m			None	PY58a
65	ALS329M	.46	4	.05m	3.0m			NDT		5.0m	25	1.8	3.0m			None	PY58a
66	ALS329N	.46	4	.05m	3.0m			NDT		5.0m	25	1.8	3.0m			None	PY58a
67	AND352G	.47	.5	130u	10m	Green	CC	R		150m	37	2.5	10m	565n	(+/-1.)	E101c	PY669 ☑
68	AND353G	.47	.5	130u	10m	Green	CA	R		150m	37	2.5	10m	565n	(+/-1.)	E101e	PY669 ☑
69	AND324G	.47	2	130u	10n	Green	CC	NR		150m	37	2.5	10m	565n		E182k	PY501 ☑
70	AND324R	.47	2	130u	5.0u	Red	CC	NR		80m	37	2.5	15m	700n		E182k	PY501 ☑
71	AND325G	.47	2	130u	10n	Green	CA	NR		150m	37	2.5	10m	565n	Com Ka	E182m	PY501 ☑
72	AND325R	.47	2	130u	5.0u	Red	CA	NR		80m	37	2.5	15m	700n	Com Ka	E182m	PY501 ☑
73	LAA5310	.48	.5	800u△	10m△	Red	CA	NV	110m	20m	48	1.6 †	10m	655n	(+/-1.)	E101ab	PY1441
74	LAC5310	.48	.5	800u△	10m△	Red	CA	NV	110m	20m	48	1.6 †	10m	655n	(+/-1.)	E101ac	PY1441
75	LAA5313	.48	.5	2.4m△	10m△	Yellow	CA	NV	115m	20m	48	2.0 †	10m	585n	(+/-1.)	E101ab	PY1441
76	LAC5313	.48	.5	2.4m△	10m△	Yellow	CA	NV	115m	20m	48	2.0 †	10m	585n	(+/-1.)	E101ac	PY1441
77	LAA5312	.48	.5	3.3m△	10m△	Green	CA	NV	115m	20m	48	2.0 †	10m	565n	(+/-1.)	E101ab	PY1441
78	LAC5312	.48	.5	3.3m△	10m△	Green	CA	NV	115m	20m	48	2.0 †	10m	565n	(+/-1.)	E101ac	PY1441
79	LAA5311	.48	.5	3.4m△	10m△	Red	CA	NV	120m	20m	48	1.9 †	10m	695n	(+/-1.)	E101ab	PY1441
80	LAC5311	.48	.5	3.4m△	10m△	Red	CA	NV	120m	20m	48	1.9 †	10m	695n	(+/-1.)	E101ac	PY1441
81	LAA5314	.48	.5	3.5m△	10m△	Orange	CA	NV	115m	20m	48	2.0 †	10m	635n	(+/-1.)	E101ab	PY1441
82	LAC5314	.48	.5	3.5m△	10m△	Orange	CA	NV	115m	20m	48	2.0 †	10m	635n	(+/-1.)	E101ac	PY1441
83	AND326G	.50	.5	130u	10m	Green	CC	NPR		150m	37	2.5	10m	565n	(+/-1.8.);CC	E182n	PY501 ☑
84	AND326R	.50	.5	130u	5.0u	Red	CC	NPR		80m	37	2.5	15m	700n	(+/-1.8.);CC	E182n	PY501 ☑
85	AND327G	.50	.5	130u	10m	Green	CA	NPR		150m	37	2.5	10m	565n	(+/-1.8.);CA	E182o	PY501 ☑
86	AND327R	.50	.5	130u	5.0u	Red	CA	NPR		80m	37	2.5	15m	700n	(+/-1.8.);CA	E182o	PY501 ☑
87	TLG326	.50	.5	130u	10m	Green	CC	NR		20m	37	2.5	10m	565n	(+/-1.8); CC	E182n	PY502 ☑
88	TLG327	.50	.5	130u	10m	Green	CA	NR		20m	37	2.5	10m	565n		E182o	PY502 ☑
89	LTR326	.50	.5	.25m△	5.0m	Red	CC	NRP		20m	37	2.5	15m	700n	(+/-1.8); CC	E182n	PY502 ☑
90	LTR327	.50	.5	.25m△	5.0m	Red	CA	NRP		20m	37	2.5	15m	700n		E182o	PY502 ☑
91	TLR326	.50	.5	250u△	5.0m	Red	CC	NR		20m	37	2.5	15m	700n	(+/-1.8); CC	E182n	PY502 ☑
92	TLR327	.50	.5	250u△	5.0m	Red	CA	NR		20m	37	2.5	15m	700n		E182o	PY502 ☑
93	LTG326	.50	.5	0.3m△	10m	Green	CC	NRP		20m	37	2.5	10m	565n	(+/-1.8), CC	E182n	PY502 ☑
94	LTG327	.50	.5	0.3m△	10m	Green	CA	NRP		20m	37	2.5	10.m	565n	(+/-1.8); CA	E182o	PY502 ☑
95	MAN6830(A)	.50	.5	500u△	10m	Yellow	CA	PR	1.0	25m	48	3.0	20m	585n		E182e	PY225
96	MAN6850(A)	.50	.5	500u△	102m	Yellow	CC	PR	1.0	25m	48	3.0	20m	585n	(+/-1.8); CC	E182f	PY225
97	MAN6430	.50	.5	510u	10m	Green	CA	PR	1.0	30m	48	3.0	20m	562n		E182e	PY225
98	TIL330A	.50	.5	600u	20m	Red	CA	PRV		25m	28	2.0	20m	655n	(+/-1.); CA	E101aa	PY506a
99	LAA5410	.50	.5	800u△	10m△	Red	CA	NV	110m	20m	48	1.6 †	10m	655n	(+/-1.)	E101ab	PY1442
100	LAC5410	.50	.5	800u△	10m△	Red	CA	NV	110m	20m	48	1.6 †	10m	655n	(+/-1.)	E101ac	PY1442
101	LTS544R	.50	.5	800u	20m	Red	CA	NVR								E101ab	PY1367
102	LTS545R	.50	.5	800u	20m	Red	CA	NVR								E101ac	PY1367
103	LTS548R	.50	.5	800u	20m	Red	CA	NVR								E101ab	PY1369
104	LTS549R	.50	.5	800u	20m	Red	CA	NVR								E101ac	PY1369
105	LAA5413	.50	.5	2.4m△	10m△	Yellow	CA	NV	115m	20m	48	2.0 †	10m	585n	(+/-1.)	E101ab	PY1442
106	LAC5413	.50	.5	2.4m△	10m△	Yellow	CA	NV	115m	20m	48	2.0 †	10m	585n	(+/-1.)	E101ac	PY1442
107	LTS544Y	.50	.5	2.5m	20m	Yellow	CA	NVR								E101ab	PY1367
108	LTS545Y	.50	.5	2.5m	20m	Yellow	CA	NVR								E101ac	PY1367
109	LTS548Y	.50	.5	2.5m	20m	Yellow	CA	NVR								E101ab	PY1369
110	LTS549Y	.50	.5	2.5m	20m	Yellow	CA	NVR								E101ac	PY1369

SYMBOLS AND CODES EXPLAINED IN INTERPRETER

35. LED CHARACTER DISPLAYS - Seven-Segment Numeric (Cont'd)

IN ORDER OF FONT AND: (1) CHAR. HEIGHT (2)NO. CHAR. (3) INTENSITY & (4) TYPE NO.

LINE No.	4 TYPE NUMBER	1 CHAR. HGHT (in)	2 NO. CHAR	3 LUMINOUS INTENSITY Iv MIN (cd)	IF TEST (A)	COLOR	CONN.	DISP NOMEN	PD RATED MAX (W)	IF RATED MAX (A)	TEMP RNGE CODE	FORWARD VOLTAGE VF MAX (V)	IF TEST (A)	PEAK WAVE-LENGTH λP (m)	FEATURES	DRAWINGS SCHE-MATIC	OUTLINE
1	LTS544G	.50	.5	3.2m	20m	Green	CA	NVR								E101ab	PY1367
2	LTS545G	.50	.5	3.2m	20m	Green	CA	NVR								E101ac	PY1367
3	LTS548G	.50	.5	3.2m	20m	Green	CA	NVR								E101ab	PY1369
4	LTS549G	.50	.5	3.2m	20m	Green	CA	NVR								E101ac	PY1369
5	LAA5412	.50	.5	3.3mΔ	10mΔ	Green	CA	NV	115m	20m	48	2.0 †	10m	565n	(+/-1.)	E101ab	PY1442
6	LAC5412	.50	.5	3.3mΔ	10mΔ	Green	CA	NV	115m	20m	48	2.0 †	10m	565n	(+/-1.)	E101ac	PY1442
7	LAA5411	.50	.5	3.4mΔ	10mΔ	Red	CA	NV	120m	20m	48	1.9 †	10m	695n	(+/-1.)	E101ab	PY1442
8	LAC5411	.50	.5	3.4mΔ	10mΔ	Red	CA	NV	120m	20m	48	1.9 †	10m	695n	(+/-1.)	E101ac	PY1442
9	LAA5414	.50	.5	3.5mΔ	10mΔ	Orange	CA	NV	115m	20m	48	2.0 †	10m	635n	(+/-1.)	E101ab	PY1442
10	LAC5414	.50	.5	3.5mΔ	10mΔ	Orange	CA	NV	115m	20m	48	2.0 †	10m	635n	(+/-1.)	E101ac	PY1442
11	LTS544E	.50	.5	3.5m	20m	Orange	CA	NVR								E101ab	PY1367
12	LTS544HR	.50	.5	3.5m	20m	Red	CA	NVR								E101ab	PY1367
13	LTS545E	.50	.5	3.5m	20m	Orange	CA	NVR								E101ac	PY1367
14	LTS545HR	.50	.5	3.5m	20m	Red	CA	NVR								E101ac	PY1367
15	LTS548E	.50	.5	3.5m	20m	Orange	CA	NVR								E101ab	PY1369
16	LTS548HR	.50	.5	3.5m	20m	Red	CA	NVR								E101ab	PY1369
17	LTS549E	.50	.5	3.5m	20m	Orange	CA	NVR								E101ac	PY1369
18	LTS549HR	.50	.5	3.5m	20m	Red	CA	NVR								E101ac	PY1369
19	MMN56440	.50	1	320n	10m	Orange	OTHR	NR	1.6	160m	48	2.6	20m	630n		E164k	None
20	AND370G	.50	1	60u	10m	Green	CC	AR		80m	37	2.5	10m	565n		E181t	PY581 ☑
21	AND371G	.50	1	60u	10m	Green	CA	AR		80m	37	2.5	10m	565n	Com Ka	E181u	PY581 ☑
22	AND352R	.50	1	130u	5.0m	Red	CC	NR		80m	37	2.5	15m	700n		E101c	PY669 ☑
23	AND353R	.50	1	130u	5.0m	Red	CA	NR		80m	37	2.5	15m	700n	Com Ka	E101e	PY669 ☑
24	TLG352	.50	1	.13m	10m	Green		NR		20m	37	2.5	10m	565n		None	None
25	TLG353	.50	1	130u	10m	Green	CA	NR		20m	37	2.5	10m	565n		E101e	PY669 ☑
26	TLR352	.50	1	130u	5.0m	Red	CC	NR		20m	37	2.5	15m	700n		E101c	PY669 ☑
27	TLR353	.50	1	130u	5.0m	Red	CA	NR		20m	37	2.5	15m	700n		E101e	PY669 ☑
28	ALS333G	.50	1	.15m	20m			NDT	400m	25m	67	2.0	20m			None	PY64s
29	ALS333V	.50	1	.15m	20m			NDT	400m	25m	67	2.0	20m			None	PY64s
30	ALS334G	.50	1	.15m	20m			NDT	660m	25m	67	3.3	20m			None	PY64s
31	ALS334V	.50	1	.15m	20m			NDT	660m	25m	67	3.3	20m			None	PY64s
32	ALS335G	.50	1	.15m	20m			NDT	660m	25m	67	3.5	20m			None	PY64s
33	ALS335V	.50	1	.15m	20m			NDT	660m	25m	67	3.5	20m			None	PY64s
34	ALS333A	.50	1	0.2m	20m			NDT	400m	25m	67	2.0	20m			None	PY64s
35	ALS333B	.50	1	0.2m	20m			NDT	400m	25m	67	2.0	20m			None	PY64s
36	ALS334A	.50	1	0.2m	20m			NDT	660m	25m	67	3.3	20m			None	PY64s
37	ALS334B	.50	1	0.2m	20m			NDT	660m	25m	67	3.3	20m			None	PY64s
38	ALS335A	.50	1	.25m	20m			NDT	660m	25m	67	3.5	20m			None	PY64s
39	ALS335B	.50	1	.25m	20m			NDT	660m	25m	67	3.5	20m			None	PY64s
40	LTR352	.50	1	.25mΔ	5.0m	Red	CC	N		20m	37	2.5	15m	700n	Com Ka	E101au	PY894 ☑
41	LTR353	.50	1	.25mΔ	5.0m	Red	CA	N		20m	37	2.5	15m	700n		E101at	PY894 ☑
42	A5011-11	.50	1	300u	10m	Red	CA	NR								E101j	PY1201a
43	A5011-13	.50	1	300u	10m	Red		PR								E101bg	PY1201b
44	C5011-11	.50	1	300u	10m	Red	CA	NR								E101t	PY1201a
45	C5011-13	.50	1	300u	10m	Red		PR								E101bh	PY1201b
46	LTG352	.50	1	0.3mΔ	10m	Green	CC	NR		20m	37	2.5	10m	565n	Com Ka	E101au	PY894 ☑
47	LTG353	.50	1	0.3mΔ	10m	Green	CA	NR		20m	37	2.5	10.m	565n		E101at	PY894 ☑
48	MG151C	.50	1	300u	20m	Green	CC	NR	300m	20m	27	2.2	20m	565n		E101az	PY915
49	MS151C	.50	1	300u	20m	Red	CC	NR	300m	20m	27	2.2	20m	635n		E101az	PY915
50	MS151A	.50	1	350u	20m	Red	CA	NR				2.6	20m	700n		E101j	PY915
51	A5031-11	.50	1	400u	10m	Yellow	CA	NR								E101j	PY1201a
52	A5031-13	.50	1	400u	10m	Yellow		PR								E101bg	PY1201b
53	AND5005GAL	.50	1	0.4m	20m	Green		NV		20m	28	2.5	10m	555n		None	PY544
54	AND5005GCL	.50	1	0.4m	20m	Green		NV		20m	28	2.5	10m	555n		None	PY544
55	AND5010GAL	.50	1	0.4m	20m	Green	CA	NR		20m	28	2.5	10m	555n		E101bc	PY544
56	AND5010GCL	.50	1	0.4m	20m	Green	CC	NR		20m	28	2.5	10m	555n		E101bb	PY544
57	C5031-11	.50	1	400u	10m	Yellow	CA	NR								E101t	PY1201a
58	C5031-13	.50	1	400u	10m	Yellow		PR								E101bh	PY1201b
59	A5021-11	.50	1	450u	10m	Green	CA	NR								E101j	PY1201a
60	A5021-13	.50	1	450u	10m	Green		PR								E101bg	PY1201b
61	C5021-11	.50	1	450u	10m	Green	CA	NR								E101t	PY1201a
62	C5021-13	.50	1	450u	10m	Green		PR								E101bh	PY1201b
63	MAN6860(A)	.50	1	500uΔ	102m	Yellow	CA	NR	.6	25m	48	3.0	20m	585n		E101t	PY225b
64	MAN6880(A)	.50	1	500uΔ	102m	Yellow	CC	NR	.6	25m	48	3.0	20m	585n		E101ah	PY225b
65	MAN6480	.50	1	510u	10m	Green	CC	NR	.57	30m	48	3.0	20m	562n		E101ah	PY225b
66	AND5005HAL	.50	1	0.6m	20m	Red		NV		20m	28	2.0	20m	655n		None	PY544
67	AND5005HCL	.50	1	0.6m	20m	Red		NV		20m	28	2.0	20m	655n		None	PY544
68	AND5005RAL	.50	1	0.6m	20m	Red		NV		20m	28	2.0	20m	655n		None	PY544
69	AND5005RCL	.50	1	0.6m	20m	Red		NV		20m	28	2.0	20m	655n		None	PY544
70	AND5010HAL	.50	1	0.6m	20m	Red	CA	NR		20m	28	2.0	20m	655n		E101bc	PY544
71	AND5010HCL	.50	1	0.6m	20m	Red	CC	NR		20m	28	2.0	20m	655n		E101bb	PY544
72	AND5010RAL	.50	1	0.6m	20m	Red	CA	NR		20m	28	2.0	20m	655n		E101bc	PY544
73	AND5010RCL	.50	1	0.6m	20m	Red	CC	NR		20m	28	2.0	20m	655n		E101bb	PY544
74	TIL322A	.50	1	600u	20m	Red	CC	NR		25m	28	2.0	20m	655n		E101u	PY506
75	LED50	.50	1	650u		Red		N		100u	28$		20m	655n		None ♦	PY506
76	LED50R	.50	1	650u		Red		N		100u	28$		20m	655n		None ♦	PY506
77	LED51	.50	1	650u		Red		N		100u	28$		20m	655n		None ♦	PY506
78	LED51R	.50	1	650u		Red		N		100u	28$		20m	655n		None ♦	PY506
79	AND5005OAL	.50	1	0.7m	20m	Orange		NV		20m	28	2.5	10m	635n		None	PY544
80	AND5005OCL	.50	1	0.7m	20m	Orange		NV		20m	28	2.5	10m	635n		None	PY544
81	AND5005YAL	.50	1	0.7m	20m	Yellow		NV		20m	28	2.5	10m	585n		None	PY544
82	AND5005YCL	.50	1	0.7m	20m	Yellow		NV		20m	28	2.5	10m	585n		None	PY544
83	AND5010OAL	.50	1	0.7m	20m	Orange	CA	NR		20m	28	2.5	10m	635n		E101bc	PY544
84	AND5010OCL	.50	1	0.7m	20m	Orange	CC	NR		20m	28	2.5	10m	635n		E101bb	PY544
85	AND5010YAL	.50	1	0.7m	20m	Yellow	CA	NR		20m	28	2.5	10m	585n		E101bc	PY544
86	AND5010YCL	.50	1	0.7m	20m	Yellow	CC	NR		20m	28	2.5	10m	585n		E101bb	PY544
87	LAA5010	.50	1	800uΔ	10mΔ	Red	CA	NR	110m	20m	48	1.6 †	10m	655n		E101t	PY1438
88	LAA5110	.50	1	800uΔ	10mΔ	Red	CA	NR	110m	20m	48	1.6 †	10m	655n		E101t	PY1439
89	LAC5010	.50	1	800uΔ	10mΔ	Red	CC	NR	110m	20m	48	1.6 †	10m	655n		E101u	PY1438
90	LAC5110	.50	1	800uΔ	10mΔ	Red	CC	NR	110m	20m	48	1.6 †	10m	655n		E101u	PY1439
91	LTS542R	.50	1	800u	20m	Red	CA	NR								E101t	PY1366
92	LTS543R	.50	1	800u	20m	Red	CC	NR								E101u	PY1366
93	LTS546R	.50	1	800u	20m	Red	CA	NR								E101t	PY1368
94	LTS547R	.50	1	800u	20m	Red	CC	NR								E101u	PY1368
95	MG151A	.50	1	800u	20m	Green	CA	NR				3.0	20m	565n		E101j	PY915
96	MY151A	.50	1	800u	20m	Yellow	CA	NR				3.0	20m	585n		E101j	PY915
97	MY151C	.50	1	800u	20m	Yellow	CC	NR				3.0	20m	585n		E101k	PY915
98	A5041-11	.50	1	1.0m	10m	Orange	CA	NR								E101j	PY1201a
99	A5041-13	.50	1	1.0m	10m	Orange		PR								E101bg	PY1201b
100	A5041R11	.50	1	1.0m	10m	Red	CA	NR								E101j	None
101	A5041R13	.50	1	1.0m	10m	Red		PR								E101bg	PY1201b
102	C5041-11	.50	1	1.0m	10m	Orange	CA	NR								E101t	PY1201a
103	C5041-13	.50	1	1.0m	10m	Orange		PR								E101bh	PY1201b
104	C5041R11	.50	1	1.0m	10m	Red	CA	NR								E101t	None
105	C5041R13	.50	1	1.0m	10m	Red	CA	PR								E101bg	None
106	D3001PA	.50	1	1.5mΔ	10m	Orange	CA	NR	75mΔ	25m	48	2.2 †	20m	630n		E101m	PY977 ☑
107	LAA5013	.50	1	2.4mΔ	10mΔ	Yellow	CA	NR	115m	20m	48	2.0 †	10m	585n		E101t	PY1438
108	LAC5013	.50	1	2.4mΔ	10mΔ	Yellow	CC	NR	115m	20m	48	2.0 †	10m	585n		E101u	PY1438
109	LAC5113	.50	1	2.4mΔ	10mΔ	Yellow	CC	NR	115m	20m	48	2.0 †	10m	585n		E101u	PY1439
110	LT506G	.50	1	2.4m	20m	Green	CA	NR	400m	20m	27	2.8	20m	565n		E101t	PY650

SYMBOLS AND CODES EXPLAINED IN INTERPRETER

35. LED CHARACTER DISPLAYS - Seven-Segment Numeric (Cont'd)

IN ORDER OF FONT AND: (1) CHAR. HEIGHT (2)NO. CHAR. (3) INTENSITY & (4) TYPE NO.

LINE No.	4 TYPE NUMBER	1 CHAR. HGHT (in)	2 NO. CHAR	3 LUMINOUS INTENSITY Iv MIN (cd)	IF TEST (A)	COLOR	CONN.	DISP NOMEN	PD RATED MAX (W)	IF RATED MAX (A)	TEMP RNGE CODE - +	FORWARD VOLTAGE VF MAX (V)	IF TEST (A)	PEAK WAVE-LENGTH λP (m)	FEATURES	DRAWINGS SCHE-MATIC	OUTLINE
1	LTS542Y	.50	1	2.5m	20m	Yellow	CA	NR								E101t	PY1366
2	LTS543Y	.50	1	2.5m	20m	Yellow	CC	NR								E101u	PY1366
3	LTS546Y	.50	1	2.5m	20m	Yellow	CA	NR								E101t	PY1368
4	LTS547Y	.50	1	2.5m	20m	Yellow	CC	NR								E101u	PY1368
5	LTS542G	.50	1	3.2m	20m	Green	CA	NR								E101t	PY1366
6	LTS543G	.50	1	3.2m	20m	Green	CC	NR								E101u	PY1366
7	LTS546G	.50	1	3.2m	20m	Green	CA	NR								E101t	PY1368
8	LTS547G	.50	1	3.2m	20m	Green	CC	NR								E101u	PY1368
9	LAA5012	.50	1	3.3mΔ	10mΔ	Green	CA	NR	115m	20m	48	2.0 †	10m	565n		E101t	PY1438
10	LAA5112	.50	1	3.3mΔ	10mΔ	Green	CA	NR	115m	20m	48	2.0 †	10m	565n		E101t	PY1439
11	LAC5012	.50	1	3.3mΔ	10mΔ	Green	CC	NR	115m	20m	48	2.0 †	10m	565n		E101u	PY1438
12	LAC5112	.50	1	3.3mΔ	10mΔ	Green	CC	NR	115m	20m	48	2.0 †	10m	565n		E101u	PY1439
13	LAA5011	.50	1	3.4mΔ	10mΔ	Red	CA	NR	120m	20m	48	1.9 †	10m	695n		E101t	PY1438
14	LAA5111	.50	1	3.4mΔ	10mΔ	Red	CA	NR	120m	20m	48	1.9 †	10m	695n		E101t	PY1439
15	LAA5113	.50	1	3.4mΔ	10mΔ	Yellow	CA	NR	115m	20m	48	2.0 †	10m	585n		E101t	PY1439
16	LAC5011	.50	1	3.4mΔ	10mΔ	Red	CC	NR	120m	20m	48	1.9 †	10m	695n		E101u	PY1438
17	LAC5111	.50	1	3.4mΔ	10mΔ	Red	CC	NR	120m	20m	48	1.9 †	10m	695n		E101u	PY1439
18	LAA5014	.50	1	3.5mΔ	10mΔ	Orange	CA	NR	115m	20m	48	2.0 †	10m	635n		E101t	PY1438
19	LAA5114	.50	1	3.5mΔ	10mΔ	Orange	CA	NR	115m	20m	48	2.0 †	10m	635n		E101t	PY1439
20	LAC5014	.50	1	3.5mΔ	10mΔ	Orange	CC	NR	115m	20m	48	2.0 †	10m	635n		E101u	PY1438
21	LAC5114	.50	1	3.5mΔ	10mΔ	Orange	CC	NR	115m	20m	48	2.0 †	10m	635n		E101u	PY1439
22	LTS542E	.50	1	3.5m	20m	Orange	CA	NR								E101t	PY1366
23	LTS542HR	.50	1	3.5m	20m	Red	CA	NR								E101t	PY1366
24	LTS543E	.50	1	3.5m	20m	Orange	CC	NR								E101u	PY1366
25	LTS543HR	.50	1	3.5m	20m	Red	CC	NR								E101u	PY1366
26	LTS546E	.50	1	3.5m	20m	Orange	CA	NR								E101t	PY1368
27	LTS546HR	.50	1	3.5m	20m	Red	CA	NR								E101t	PY1368
28	LTS547E	.50	1	3.5m	20m	Orange	CC	NR								E101u	PY1368
29	LTS547HR	.50	1	3.5m	20m	Red	CC	NR								E101u	PY1368
30	LTD536AP	.50	2		10m	Red	CC	NR	40m	15m	28	2.8	20m			E182d	PY1592a
31	LTD586AP	.50	2		10m	Red	CA	NR	40m	15m	28	2.8	20m			E182c	PY1592a
32	MMN56320	.50	2	320n	10m	Orange	OTHR	NR	80m	160m	48	2.6	20m	630n		E202g	None
33	MMN58120	.50	2	320n	10m	Yellow	OTHR	NR	800m	160m	48	2.6	20m	630n		E202g	None
34	MMN58320	.50	2	320n	10m	Yellow	OTHR	NR	800m	160m	48	2.6	20m	630n		E202g	None
35	MMN59120	.50	2	320n	10m	Red	OTHR	NR	800m	160m	48	2.6	20m	630n		E202g	None
36	MMN59320	.50	2	320n	10m	Red	OTHR	NR	800m	160m	48	2.6	20m	630n		E202g	None
37	MMN56120	.50	2	510n	10m	Orange	OTHR	NR	800m	160m	48	2.6	20m	630n		E202g	None
38	A5042R12	.50	2	1.0u	10m	Red	CA	NPR								E182y	PY1203c
39	CQ209S	.50	2	70u	5.0m	Red		N		20m	26§	2.2	10m	630n		None ♦	PY810
40	CQ216Y	.50	2	70u	5.0m	Red		N		20m	26§	2.2	10m	630n		None ♦	PY810
41	NSN534	.50	2	100uΔ	10mΔ	Red	CA	NR		20m	27	2.0	10m	660n		E202a	PY418a⊠
42	NSN581	.50	2	100uΔ	10mΔ	Red	CC	NR		20m	27	2.0	10m	660n		E202b	PY418a⊠
43	NSN582	.50	2	100uΔ	10mΔ	Red	CA	NR		20m	27	2.0	10m	660n		E202c	PY418a⊠
44	NSN583	.50	2	100uΔ	10mΔ	Red	CC	NR		20m	27	2.0	10m	660n		E202d	PY418a⊠
45	NSN584	.50	2	100uΔ	10mΔ	Red	CA	NR		20m	27	2.0	10m	660n		E202e	PY418a⊠
46	TLG324	.50	2	130u	10m	Green	CC	NR		20m	37	2.5	10m	565n		E182k	PY501 ⊠
47	TLG325	.50	2	130u	10m	Green	CA	NR		20m	37	2.5	10m	565n		E182m	PY501 ⊠
48	LTD535R	.50	2	200u	10m	Red	CC	NR	55m	25m	28	2.0	20m	655n		E182k	PY1592
49	LTD536AR	.50	2	200u	10m	Red	CC	NR	55m	25m	28	2.0	20m	655n		E182d	PY1592a
50	LTD585R	.50	2	200u	10m	Red	CA	NR	55m	25m	28	2.0	20m	655n		E182m	PY1592
51	LTD586AR	.50	2	200u	10m	Red	CA	NR	55m	25m	28	2.0	20m	655n		E182c	PY1592a
52	LTR324	.50	2	.25mΔ	5.0m	Red	CC	NR		20m	37	2.5	15m	700n	Com Ka	E182k	PY501 ⊠
53	LTR325	.50	2	.25mΔ	5.0m	Red	CA	NR		20m	37	2.5	15m	700n		E182m	PY501 ⊠
54	TLR324	.50	2	250uΔ	5.0m	Red	CC	NR		20m	37	2.5	15m	700n		E182k	PY501 ⊠
55	TLR325	.50	2	250uΔ	5.0m	Red	CA	NR		20m	37	2.5	15m	700n		E182m	PY501 ⊠
56	A5012-11	.50	2	300u	10m	Red	CA	ND								E182y	PY1202
57	A5012-12	.50	2	300u	10m	Red	CA	NPR								E182y	PY1203c
58	A5012-13	.50	2	300u	10m	Red		NPR								E182ab	PY1203c
59	C5012-11	.50	2	300u	10m	Red	CC	ND								E182x	PY1203a
60	C5012-12	.50	2	300u	10m	Red	CC	NPR								E182x	PY1203c
61	D5012-11	.50	2	300u	10m	Red	CA	ND								E102h	PY1203b
62	D5012-12	.50	2	300u	10m	Red	CA	NPR								E102i	PY1203d
63	E5012-11	.50	2	300u	10m	Red	CC	ND								E102g	PY1203b
64	E5012-12	.50	2	300u	10m	Red	CC	NPR								E102j	PY1203d
65	LTD535P	.50	2	300u	10m	Red	CC	NR	40m	15m	28	2.8	20m	697n		E182k	PY1592
66	LTD585P	.50	2	300u	10m	Red	CA	NR	40m	15m	28	2.8	20m	697n		E182m	PY1592
67	LTG324	.50	2	0.3mΔ	10m	Green	CC	NR		20m	37	2.5	10m	565n	Com Ka	E182k	PY501 ⊠
68	LTG325	.50	2	0.3mΔ	10m	Green	CA	NR		20m	37	2.5	10.m	565n		E182m	PY501 ⊠
69	CMN59120	.50	2	350u	10m	Red	OTHR	NR	800m	20m	48	2.6	20m			E202g	PY1345
70	CMN59320	.50	2	350u	10m	Red	OTHR	NR	800m	20m	48	2.6	20m			E202g	PY1345
71	MS251A	.50	2	350u	20m	Red	CA	NR				2.6	20m	700n		E182m	PY788b
72	MS251C	.50	2	350u	20m	Red	CC	NR				2.6	20m	700n		E182k	PY788b
73	MS254A	.50	2	350u	20m	Red	CA	N				2.6	20m	700n		E202l	PY981
74	MS254C	.50	2	350u	20m	Red	CC	N				2.6	20m	700n		E202m	PY981
75	A5032-11	.50	2	400u	10m	Yellow	CA	ND								E182y	PY1202
76	A5032-12	.50	2	400u	10m	Yellow	CA	NPR								E182y	PY1203c
77	A5032-13	.50	2	400u	10m	Yellow		NPR								E182ab	PY1203c
78	AND5015GAL1	.50	2	0.4m	20m	Green	CA	NV		20m	28	2.5	10m	555n		E102h	None
79	AND5015GAL	.50	2	0.4m	20m	Green	CA	NV		20m	28	2.5	10m	555n		E182y	PY508
80	AND5015GCL1	.50	2	0.4m	20m	Green	CC	NV		20m	28	2.5	10m	555n		E102g	None
81	AND5015GCL	.50	2	0.4m	20m	Green	CC	NV		20m	28	2.5	10m	555n		E182x	PY508
82	AND5020GAL1	.50	2	0.4m	20m	Green	CA	NR		20m	28	2.5	10m	555n		E102h	None
83	AND5020GAL	.50	2	0.4m	20m	Green	CA	NR		20m	28	2.5	10m	555n		E182y	PY508
84	AND5020GCL1	.50	2	0.4m	20m	Green	CC	NR		20m	28	2.5	10m	555n		E102g	None
85	AND5020GCL	.50	2	0.4m	20m	Green	CC	NR		20m	28	2.5	10m	555n		E182x	PY508
86	C5032-11	.50	2	400u	10m	Yellow	CC	ND								E182x	PY1203a
87	C5032-12	.50	2	400u	10m	Yellow	CC	NPR								E182x	PY1203c
88	D5032-11	.50	2	400u	10m	Yellow	CA	ND								E102h	PY1203b
89	D5032-12	.50	2	400u	10m	Yellow	CA	NPR								E102i	PY1203d
90	E5032-11	.50	2	400u	10m	Yellow	CC	ND								E102g	PY1203b
91	E5032-12	.50	2	400u	10m	Yellow	CC	NPR								E102j	PY1203d
92	A5022-11	.50	2	450u	10m	Green	CA	ND								E182y	PY1202
93	A5022-12	.50	2	450u	10m	Green	CA	NPR								E182y	PY1203c
94	A5022-13	.50	2	450u	10m	Green		NPR								E182ab	PY1203c
95	C5022-11	.50	2	450u	10m	Green	CC	ND								E182x	PY1203a
96	C5022-12	.50	2	450u	10m	Green	CC	NPR								E182x	PY1203c
97	D5022-11	.50	2	450u	10m	Green	CA	ND								E102h	PY1203b
98	D5022-12	.50	2	450u	10m	Green	CA	NPR								E102i	PY1203d
99	E5022-11	.50	2	450u	10m	Green	CC	ND								E102g	PY1203b
100	E5022-12	.50	2	450u	10m	Green	CC	NPR								E102j	PY1203d
101	MAN6810(A)	.50	2	500uΔ	10m	Yellow	CA	NR	1.2	25m	48	3.0	20m	585n		E182c	PY225
102	MAN6840(A)	.50	2	500uΔ	102m	Yellow	CC	NR	1.2	25m	48	3.0	20m	585n		E182d	PY225
103	CMN56120	.50	2	510u	10m	Orange	OTHR	NR	800m	20m	48	2.6	20m			E202g	PY1345
104	CMN56320	.50	2	510u	10m	Orange	OTHR	NR	800m	20m	48	2.6	20m			E202g	PY1345
105	CMN58120	.50	2	510u	10m	Yellow	OTHR	NR	800m	20m	48	3.0	20m			E202g	PY1345
106	CMN58320	.50	2	510u	10m	Yellow	OTHR	NR	800m	20m	48	3.0	20m			E202g	PY1345
107	MAN6410	.50	2	510u	10m	Green	CA	NR	1.1	30m	48	3.0	20m	562n		E182c	PY225
108	AND5015HAL1	.50	2	0.6m	20m	Red	CA	NV		20m	28	2.0	20m	655n		E102h	None
109	AND5015HAL	.50	2	0.6m	20m	Red	CA	NV		20m	28	2.0	20m	655n		E182y	PY508
110	AND5015HCL1	.50	2	0.6m	20m	Red	CC	NV		20m	28	2.0	20m	655n		E102g	None

SYMBOLS AND CODES EXPLAINED IN INTERPRETER

35. LED CHARACTER DISPLAYS- Seven-Segment Numeric (Cont'd)

IN ORDER OF FONT AND: (1) CHAR. HEIGHT (2)NO. CHAR. (3) INTENSITY & (4) TYPE NO.

LINE No.	4 TYPE NUMBER	1 CHAR. HGHT (in)	2 NO. CHAR	3 LUMINOUS INTENSITY Iv MIN (cd)	IF TEST (A)	COLOR	CONN.	DISP NOMEN	PD RATED MAX (W)	IF RATED MAX (A)	TEMP RNGE CODE - +	FORWARD VOLTAGE VF MAX (V)	IF TEST (A)	PEAK WAVE-LENGTH λP (m)	FEATURES	DRAWINGS SCHE-MATIC	OUTLINE
1	AND5015HCL	.50	2	0.6m	20m	Red	CC	NV		20m	28	2.0	20m	655n		E182x	PY508
2	AND5015RAL1	.50	2	0.6m	20m	Red	CA	NV		20m	28	2.0	20m	655n		E102h	None
3	AND5015RAL	.50	2	0.6m	20m	Red	CA	NV		20m	28	2.0	20m	655n		E182y	PY508
4	AND5015RCL1	.50	2	0.6m	20m	Red	CC	NV		20m	28	2.0	20m	655n		E102g	None
5	AND5015RCL	.50	2	0.6m	20m	Red	CC	NV		20m	28	2.0	20m	655n		E182x	PY508
6	AND5020HAL1	.50	2	0.6m	20m	Red	CA	NR		20m	28	2.0	20m	655n		E102h	None
7	AND5020HAL	.50	2	0.6m	20m	Red	CA	NR		20m	28	2.0	20m	655n		E182y	PY508
8	AND5020HCL1	.50	2	0.6m	20m	Orange	CC	NR		20m	28	2.0	20m	655n		E102g	None
9	AND5020HCL	.50	2	0.6m	20m	Red	CC	NR		20m	28	2.0	20m	655n		E182x	PY508
10	AND5020RAL1	.50	2	0.6m	20m	Orange	CA	NR		20m	28	2.0	20m	655n		E102h	None
11	AND5020RAL	.50	2	0.6m	20m	Red	CA	NR		20m	28	2.0	20m	655n		E182y	PY508
12	AND5020RCL1	.50	2	0.6m	20m	Red	CC	NR		20m	28	2.0	20m	655n		E102g	None
13	AND5020RCL	.50	2	0.6m	20m	Red	CC	NR		20m	28	2.0	20m	655n		E182x	PY508
14	LTD535Y	.50	2	600u	10m	Yellow	CC	NR	60m	20m	28	2.8	20m	585n		E182k	PY1592
15	LTD536AY	.50	2	600u	10m	Yellow	CC	NR	60m	20m	28	2.8	20m	585n		E182d	PY1592a
16	LTD585Y	.50	2	600u	10m	Yellow	CA	NR	60m	20m	28	2.8	20m	585n		E182m	PY1592
17	LTD586AY	.50	2	600u	10m	Yellow	CA	NR	60m	20m	28	2.8	20m	585n		E182c	PY1592a
18	AND5015OAL1	.50	2	0.7m	20m	Orange	CA	NV		20m	28	2.5	10m	635n		E102h	None
19	AND5015OAL	.50	2	0.7m	20m	Orange	CA	NV		20m	28	2.5	10m	635n		E182y	PY508
20	AND5015OCL1	.50	2	0.7m	20m	Orange	CC	NV		20m	28	2.5	10m	635n		E102g	None
21	AND5015OCL	.50	2	0.7m	20m	Orange	CC	NV		20m	28	2.5	10m	635n		E182x	PY508
22	AND5015YAL1	.50	2	0.7m	20m	Yellow	CA	NV		20m	28	2.5	10m	585n		E102h	None
23	AND5015YAL	.50	2	0.7m	20m	Yellow	CA	NV		20m	28	2.5	10m	585n		E182y	PY508
24	AND5015YCL1	.50	2	0.7m	20m	Yellow	CC	NV		20m	28	2.5	10m	585n		E102g	None
25	AND5015YCL	.50	2	0.7m	20m	Yellow	CC	NV		20m	28	2.5	10m	585n		E182x	PY508
26	AND5020OAL1	.50	2	0.7m	20m	Orange	CA	NR		20m	28	2.5	10m	635n		E102h	None
27	AND5020OAL	.50	2	0.7m	20m	Orange	CA	NR		20m	28	2.5	10m	635n		E182y	PY508
28	AND5020OCL1	.50	2	0.7m	20m	Orange	CC	NR		20m	28	2.5	10m	635n		E102g	None
29	AND5020OCL	.50	2	0.7m	20m	Orange	CC	NR		20m	28	2.5	10m	635n		E182x	PY508
30	AND5020YAL1	.50	2	0.7m	20m	Yellow	CA	NR		20m	28	2.5	10m	585n		E102h	None
31	AND5020YAL	.50	2	0.7m	20m	Yellow	CA	NR		20m	28	2.5	10m	585n		E182y	PY508
32	AND5020YCL1	.50	2	0.7m	20m	Yellow	CC	NR		20m	28	2.5	10m	585n		E102g	None
33	AND5020YCL	.50	2	0.7m	20m	Yellow	CC	NR		20m	28	2.5	10m	585n		E182x	PY508
34	CQ216X	.50	2	700u	5.0m	Red		N		20m	26§	2.2	10m	630n		None ♦	PY810
35	LTD535E	.50	2	750u	10m	Orange	CC	NR	75m	25m	28	2.8	20m	630n		E182k	PY1592
36	LTD535G	.50	2	750u	10m	Green	CC	NR	75m	25m	28	2.8	20m	565n		E182k	PY1592
37	LTD535HR	.50	2	750u	10m	Red	CC	NR	75m	25m	28	2.8	20m	635n		E182k	PY1592
38	LTD536AE	.50	2	750u	10m	Orange	CC	NR	75m	25m	28	2.8	20m	630n		E182d	PY1592a
39	LTD536AG	.50	2	750u	10m	Green	CC	NR	75m	25m	28	2.8	20m	565n		E182d	PY1592a
40	LTD536AHR	.50	2	750u	10m	Red	CC	NR	75m	25m	28	2.8	20m	635n		E182d	PY1592a
41	LTD585E	.50	2	750u	10m	Orange	CA	NR	75m	25m	28	2.8	20m	630n		E182m	PY1592
42	LTD585G	.50	2	750u	10m	Green	CA	NR	75m	25m	28	2.8	20m	565n		E182m	PY1592
43	LTD585HR	.50	2	750u	10m	Red	CA	NR	75m	25m	28	2.8	20m	635n		E182m	PY1592
44	LTD586AE	.50	2	750u	10m	Orange	CA	NR	75m	25m	28	2.8	20m	630n		E182c	PY1592a
45	LTD586AG	.50	2	750u	10m	Green	CA	NR	75m	25m	28	2.8	20m	565n		E182c	PY1592a
46	LTD586AHR	.50	2	750u	10m	Red	CA	NR	75m	25m	28	2.8	20m	635n		E182c	PY1592a
47	LAA5210	.50	2	800u△	10m△	Red	CA	NR	110m	20m	48	1.6 †	10m	655n		E182c	PY1440
48	LAA5510	.50	2	800u△	10m△	Red		NR	110m	20m	48	1.6 †	10m	655n	(+/-1.8.)	E182ae	PY1443
49	LAC5210	.50	2	800u△	10m△	Red	CC	NR	110m	20m	48	1.6 †	10m	655n		E182d	PY1440
50	LAC5510	.50	2	800u△	10m△	Red		NR	110m	20m	48	1.6 †	10m	655n	(+/-1.8.)	E182ad	PY1443
51	MG251A	.50	2	800u	20m	Green	CA	NR				3.0	20m	565n		E182m	PY788b
52	MG251C	.50	2	800u	20m	Green	CC	NR				3.0	20m	565n		E182k	PY788b
53	MY251A	.50	2	800u	20m	Yellow	CA	NR				3.0	20m	585n		E182m	PY788b
54	MY251C	.50	2	800u	20m	Yellow	CC	NR				3.0	20m	585n		E182k	PY788b
55	A5042-11	.50	2	1.0m	10m	Orange	CA	ND								E182y	PY1202
56	A5042-12	.50	2	1.0m	10m	Orange	CA	NPR								E182y	PY1203c
57	A5042-13	.50	2	1.0m	10m	Orange		NPR								E182ab	PY1203c
58	A5042R11	.50	2	1.0m	10m	Red	CA	ND								E182y	PY1202
59	A5042R13	.50	2	1.0m	10m	Red		NPR								E182ab	PY1203c
60	C5042-11	.50	2	1.0m	10m	Orange	CC	ND								E182x	PY1203a
61	C5042-12	.50	2	1.0m	10m	Orange	CC	NPR								E182x	PY1203c
62	C5042R11	.50	2	1.0m	10m	Red	CC	ND								E182x	PY1203a
63	C5042R12	.50	2	1.0m	10m	Red	CC	NPR								E182x	PY1203c
64	D5042-11	.50	2	1.0m	10m	Orange	CA	ND								E102h	PY1203b
65	D5042-12	.50	2	1.0m	10m	Orange	CA	NPR								E102i	PY1203d
66	D5042R11	.50	2	1.0m	10m	Red	CA	ND								E102h	PY1203b
67	D5042R12	.50	2	1.0m	10m	Red	CA	NPR								E102i	PY1203d
68	E5042-11	.50	2	1.0m	10m	Orange	CC	ND								E102g	PY1203b
69	E5042-12	.50	2	1.0m	10m	Orange	CC	NPR								E102j	PY1203d
70	E5042R11	.50	2	1.0m	10m	Red	CC	ND								E102g	PY1203b
71	E5042R12	.50	2	1.0m	10m	Red	CC	NPR								E102j	PY1203d
72	LAA5213	.50	2	2.4m△	10m△	Yellow	CA	NR	115m	20m	48	2.0 †	10m	585n		E182c	PY1440
73	LAA5513	.50	2	2.4m△	10m△	Yellow		NR	115m	20m	48	2.0 †	10m	585n	(+/-1.8.)	E182ae	PY1443
74	LAC5213	.50	2	2.4m△	10m△	Yellow	CC	NR	115m	20m	48	1.9 †	10m	585n		E182d	PY1440
75	LAC5513	.50	2	2.4m△	10m△	Yellow		NR	115m	20m	48	2.0 †	10m	585n	(+/-1.8.)	E182ad	PY1443
76	LAA5212	.50	2	3.3m△	10m△	Green	CA	NR	115m	20m	48	2.0 †	10m	565n		E182c	PY1440
77	LAA5512	.50	2	3.3m△	10m△	Green		NR	115m	20m	48	2.0 †	10m	565n	(+/-1.8.)	E182ae	PY1443
78	LAC5212	.50	2	3.3m△	10m△	Green	CC	NR	115m	20m	48	1.9 †	10m	565n		E182d	PY1440
79	LAC5512	.50	2	3.3m△	10m△	Green		NR	115m	20m	48	2.0 †	10m	565n	(+/-1.8.)	E182ad	PY1443
80	LAA5211	.50	2	3.4m△	10m△	Red	CA	NR	120m	20m	48	1.9 †	10m	695n		E182c	PY1440
81	LAA5511	.50	2	3.4m△	10m△	Red		NR	120m	20m	48	1.9 †	10m	695n	(+/-1.8.)	E182ae	PY1443
82	LAC5211	.50	2	3.4m△	10m△	Red	CC	NR	120m	20m	48	1.9 †	10m	695n		E182d	PY1440
83	LAC5511	.50	2	3.4m△	10m△	Red		NR	120m	20m	48	1.9 †	10m	695n	(+/-1.8.)	E182ad	PY1443
84	LAA5214	.50	2	3.5m△	10m△	Orange	CA	NR	115m	20m	48	2.0 †	10m	635n		E182c	PY1440
85	LAA5514	.50	2	3.5m△	10m△	Orange		NR	115m	20m	48	2.0 †	10m	635n	(+/-1.8.)	E182ae	PY1443
86	LAC5214	.50	2	3.5m△	10m△	Orange	CC	NR	115m	20m	48	1.9 †	10m	635n		E182d	PY1440
87	LAC5514	.50	2	3.5m△	10m△	Orange		NR	115m	20m	48	2.0 †	10m	635n	(+/-1.8.)	E182ad	PY1443
88	LTC5382	.50	3*			Red	CA	NM								E164d	PY1399
89	LTC5388	.50	3*			Red	CC	NM								E204c	PY1400
90	LTC5703A1P	.50	3	140u	10m	Red		NR	2.4	30m	27	2.8	20m	697n		E163a	PY1462
91	LTC5703A3P	.50	3	140u	10m	Red		NR	2.4	30m	27	2.8	20m	565n		E163a	PY1462
92	LTC5703P	.50	3	140u	10m	Red		NR	2.4	30m	27	2.8	20m	697n		E163a	PY1462
93	LTC5703A1G	.50	3	245u	10m	Green		NR	2.4	30m	27	2.8	20m	565n		E163a	PY1462
94	LTC5703G	.50	3	245u	10m	Green		NR	2.4	30m	27	2.8	20m	565n		E163a	PY1462
95	GL6N402	.50	3	330u	10m	Green	CC	NRC		15m	26	2.5	10m	565		E334a	PY766
96	LTC5881	.50	4			Red	CC	NR								E164e	PY1401
97	LTC5882	.50	4			Red	CA	NR								E164f	PY1402
98	MMN56240	.50	4	320n	10m	Orange	OTHR	NR	1.6	160m	48	2.6	20m	630n		E164k	None
99	MMN58240	.50	4	320n	10m	Yellow	OTHR	NR	1.6	160m	48	2.6	20m	630n		E164k	None
100	MMN58440	.50	4	320n	10m	Yellow	OTHR	NR	1.6	160m	48	2.6	20m	630n		E164k	None
101	MMN59240	.50	4	320n	10m	Red	OTHR	NR	1.6	160m	48	2.6	20m	630n		E164k	None
102	MMN59440	.50	4	320n	10m	Red	OTHR	NR	1.6	160m	48	2.6	20m	630n		E164k	None
103	NSB5382	.50	4	100u△	10m△	Red	CA	NR		20m	27	2.0	10m	660n		E164d	PY419a☑
104	NSB5881	.50	4	100u△	10m△	Red		NR		20m	27	2.0	10m	660n		None	PY419a☑
105	NSB5882	.50	4	100u△	10m△	Red	CA	NR		20m	27	2.0	10m	660n		E164f	PY419a☑
106	LTC5382A1P	.50	4	140u	10m	Red		NR	2.4	30m	27	2.8	20m	697n		E164p	PY1399
107	LTC5382P	.50	4	140u	10m	Red		NR	2.4	30m	27	2.8	20m	697n		E164p	PY1399
108	LTC5388A1P	.50	4	140u	10m	Red		NR	2.4	30m	27	2.8	20m	697n		E204l	PY1399
109	LTC5388P	.50	4	140u	10m	Red		NR	2.4	30m	27	2.8	20m	697n		E204l	PY1399
110	LTC5502A1P12	.50	4	140u	10m	Red		NR	2.4	30m	27	2.8	20m	697n		E244m	PY1461

SYMBOLS AND CODES EXPLAINED IN INTERPRETER

35. LED CHARACTER DISPLAYS - Seven-Segment Numeric (Cont'd)

IN ORDER OF FONT AND: (1) CHAR. HEIGHT (2)NO. CHAR. (3) INTENSITY & (4) TYPE NO.

LINE No.	4 TYPE NUMBER	1 CHAR. HGHT (in)	2 NO. CHAR	3 LUMINOUS INTENSITY Iv MIN (cd)	IF TEST (A)	COLOR	CONN.	DISP NOMEN	PD RATED MAX (W)	IF RATED MAX (A)	TEMP RNGE CODE - +	FORWARD VOLTAGE VF MAX (V)	IF TEST (A)	PEAK WAVE-LENGTH λP (m)	FEATURES	DRAWINGS SCHE-MATIC	OUTLINE
1	LTC5881A1P	.50	4	140u	10m	Red		NR	2.4	30m	27	2.8	20m	697n		E164q	PY1401
2	LTC5881A3P	.50	4	140u	10m	Red		NR	2.4	30m	27	2.8	20m	697n		E164q	PY1401
3	LTC5881P	.50	4	140u	10m	Red		NR	2.4	30m	27	2.8	20m	697n		E164q	PY1401
4	LTC5882A1P	.50	4	140u	10m	Red		NR	2.4	30m	27	2.8	20m	697n		E164r	PY1401
5	LTC5882A3P	.50	4	140u	10m	Red		NR	2.4	30m	27	2.8	20m	697n		E164r	PY1401
6	LTC5882P	.50	4	140u	10m	Red		NR	2.4	30m	27	2.8	20m	697n		E164r	PY1401
7	LTC15401A1P	.50	4	140u	10m	Red		NR	2.4	30m	27	2.8	20m	697n		E334b	PY1595
8	LTC15401P	.50	4	140u	10m	Red		NR	2.4	30m	27	2.8	20m	697n		E334b	PY1595
9	MS453MA	.50	4	200u	10m	Red	CA	NR	300m	20m	27	1.7 †	10m	660n		E124i	PY785
10	MS453MC	.50	4	200u	10m	Red	CC	NR	300m	20m	27	1.7 †	10m	660n	ComKa	E124h	PY785
11	NSB5388	.50	4	200uΔ	10mΔ	Red	CC	NPVM		75m	27	2.0	10m	660n	(+/-1.8.8.8.)	E204c	PY618 ⧄
12	LTC5382A1G	.50	4	245u	10m	Green		NR	2.4	30m	27	2.8	20m	565n		E164p	PY1399
13	LTC5382G	.50	4	245u	10m	Green		NR	2.4	30m	27	2.8	20m	565n		E164p	PY1399
14	LTC5388A1G	.50	4	245u	10m	Green		NR	2.4	30m	27	2.8	20m	565n		E204l	PY1399
15	LTC5388G	.50	4	245u	10m	Green		NR	2.4	30m	27	2.8	20m	565n		E204l	PY1399
16	LTC5881A1G	.50	4	245u	10m	Green		NR	2.4	30m	27	2.8	20m	565n		E164q	PY1401
17	LTC5881G	.50	4	245u	10m	Green		NR	2.4	30m	27	2.8	20m	565n		E164q	PY1401
18	LTC5882A1G	.50	4	245u	10m	Green		NR	2.4	30m	27	2.8	20m	565n		E164r	PY1401
19	LTC5882G	.50	4	245u	10m	Green		NR	2.4	30m	27	2.8	20m	565n		E164r	PY1401
20	LTC15401A1G	.50	4	245u	10m	Green		NR	2.4	30m	27	2.8	20m	565n		E334b	PY1595
21	LTC15401G	.50	4	245u	10m	Green		NR	2.4	30m	27	2.8	20m	565n		E334b	PY1595
22	CMN56240	.50	4	350u	10m	Orange	OTHR	NPR	1.6	20m	48	2.6	20m			E164k	PY1346
23	CMN56440	.50	4	350u	10m	Orange	OTHR	NPR	1.6	20m	48	2.6	20m			E164k	PY1346
24	CMN58240	.50	4	350u	10m	Yellow	OTHR	NPR	1.6	20m	48	3.0	20m			E164k	PY1346
25	CMN58440	.50	4	350u	10m	Yellow	OTHR	NPR	1.6	20m	48	3.0	20m			E164k	PY1346
26	CMN59240	.50	4	350u	10m	Red	OTHR	NPR	1.6	20m	48	2.6	20m			E164k	PY1346
27	CMN59440	.50	4	350u	10m	Red	OTHR	NPR	1.6	20m	48	2.6	20m			E164k	PY1346
28	ADD5401	.50	4	600u	20m	Red	CA	NR				2.0	20m	680n		E154m	PY265
29	ADD5402	.50	4	600u	20m	Red	CA	NR				2.0	20m	680n		E154m	PY265
30	ADD5405	.50	4	600u	20m	Red	CA	NR				2.0	20m	680n		E154n	PY265
31	ADD5406	.50	4	600u	20m	Red	CA	NR				2.0	20m	680n		E154n	PY265
32	GL3P503	.50	5	200u	5.0m	Red	CC	NERK		10m	26	2.5	5.0m	695		E295a	PY765
33	NSB5931	.50	6	200uΔ	10mΔ	Red	CC	NR		150m	27	2.0	10m	660n		E146d	PY619 ⧄
34	D350PK	.51	1	280uΔ	10m	Red	CC	NR	600m	35m	48%	3.0	20m	660n	Com Ka	E101k	PY977 ⧄
35	TDSL5150	.51	1	280uΔ	2.0m	Red	CA	NR	320m	15m	48%	3.0	20m	660n		E101j	PY977 ⧄
36	TDSR5150	.51	1	280uΔ	10m	Red	CA	NR	600m	35m	48%	2.0	20m	660n	View Angle +/-50	E101k	PY977 ⧄
37	TDSR5160	.51	1	280uΔ	10m	Red	CC	NR	600m	35m	48%	2.0	20m	660n	View Angle +/-50	E101k	PY977 ⧄
38	D350PA	.51	1	400uΔ	10m	Red	CA	NR	600m	35m	48%	2.0	20m	660n		E101j	PY977 ⧄
39	D351PA	.51	1	700uΔ	10m	Orange	CA	NR	600m	25m	48%	3.0	20m	630n		E101j	PY977 ⧄
40	D351PK	.51	1	700uΔ	10m	Orange	CC	NR	600m	25m	48%	3.0	20m	630n	Com Ka	E101k	PY977 ⧄
41	D352PA	.51	1	700uΔ	10m	Green	CA	NR	600m	25m	48%	3.0	20m	565n		E101j	PY977 ⧄
42	D352PK	.51	1	700uΔ	10m	Green	CC	NR	600m	25m	48%	3.0	20m	565n	Com Ka	E101k	PY977 ⧄
43	TDSG5150	.51	1	700uΔ	10m	Green	CA	NR	600m	25m	48%	3.0	20m	660n	View Angle +/-50	E101k	PY977 ⧄
44	TDSG5160	.51	1	700uΔ	10m	Green	CC	NR	600m	25m	48%	3.0	20m	660n	View Angle +/-50	E101k	PY977 ⧄
45	TDSO5150	.51	1	700uΔ	10m	Orange	CA	NR	600m	25m	48%	3.0	20m	660n	View Angle +/-50	E101k	PY977 ⧄
46	TDSO5160	.51	1	700uΔ	10m	Orange	CC	NR	600m	25m	48%	3.0	20m	660n	View Angle +/-50	E101k	PY977 ⧄
47	TDSY5150	.51	1	700uΔ	10m	Yellow	CA	NR	600m	25m	48%	3.0	20m	660n	View Angle +/-50	E101n	PY977 ⧄
48	TDSY5160	.51	1	700uΔ	10m	Yellow	CC	NR	600m	25m	48%	3.0	20m	660n	View Angle +/-50	E101k	PY977 ⧄
49	SL1214T	.51	2	210u	5.0m	Red	CC	NR	500m	15m	26	1.9 †	5.0m	700n		E182k	PY1483
50	TDDR5250	.51	2	280uΔ	10m	Red	CA	NR	1.6	35m	48%	2.0	20m	660n		E182c	PY225I
51	TDDR5260	.51	2	280uΔ	10m	Red	CC	NR	1.6	35m	48%	2.0	20m	660n		E182d	PY225I
52	SL2214T	.51	2	400u	15m	Green	CC	NR	700m	20m	26	2.0 †	15m	565n		E182k	PY1483
53	TDDG5250	.51	2	700uΔ	10m	Green	CA	NR	1.6	25m	48%	3.0	20m	565n		E182c	PY225I
54	TDDG5260	.51	2	700uΔ	10m	Green	CC	NR	1.6	25m	48%	3.0	20m	565n		E182d	PY225I
55	TDDO5250	.51	2	700uΔ	10m	Orange	CA	NR	1.6	25m	48%	3.0	20m	630n		E182c	PY225I
56	TDDO5260	.51	2	700uΔ	10m	Orange	CC	NR	1.6	25m	48%	3.0	20m	630n		E182d	PY225I
57	TDDY5250	.51	2	700uΔ	10m	Yellow	CA	NR	1.6	25m	48%	3.0	20m	585n		E182c	PY225I
58	TDDY5260	.51	2	700uΔ	10m	Yellow	CC	NR	1.6	25m	48%	3.0	20m	585n		E182d	PY225I
59	LTS548AR	.52	.5	200u	10m	Red	CA	NVR	55m	25m	28	2.0	20m	655n		E101ab	PY1591
60	LTS549AR	.52	.5	200u	10m	Red	CA	NVR	55m	25m	28	2.0	20m	655n		E101ac	PY1591
61	LTS548AP	.52	.5	300u	10m	Red	CA	NVR	40m	15m	28	2.8	20m	697n		E101ab	PY1591
62	LTS549AP	.52	.5	300u	10m	Red	CA	NVR	40m	15m	28	2.8	20m	697n		E101ac	PY1591
63	LTS548AY	.52	.5	700u	10m	Yellow	CA	NVR	60m	20m	28	2.8	20m	585n		E101ab	PY1591
64	LTS549AY	.52	.5	700u	10m	Yellow	CA	NVR	60m	20m	28	2.8	20m	585n		E101ac	PY1591
65	LTS548AE	.52	.5	800u	10m	Orange	CA	NVR	75m	25m	28	2.8	20m	630n		E101ab	PY1591
66	LTS548AG	.52	.5	800u	10m	Green	CA	NVR	75m	25m	28	2.8	20m	565n		E101ab	PY1591
67	LTS549AE	.52	.5	800u	10m	Orange	CA	NVR	75m	25m	28	2.8	20m	630n		E101ac	PY1591
68	LTS549AG	.52	.5	800u	10m	Green	CA	NVR	75m	25m	28	2.8	20m	565n		E101ac	PY1591
69	LTS548AHR	.52	.5	900u	10m	Red	CA	NVR	75m	25m	28	2.8	20m	635n		E101ab	PY1591
70	LTS549AHR	.52	.5	900u	10m	Red	CA	NVR	75m	25m	28	2.8	20m	635n		E101ac	PY1591
71	LTS546AR	.52	1	200u	10m	Red	CA	NR	55m	25m	28	2.0	20m	655n		E101t	PY1590
72	LTS547AR	.52	1	200u	10m	Red	CC	NR	55m	25m	28	2.0	20m	655n		E101u	PY1590
73	LTS5311R	.52	1	200u	10m	Red		NR	55m	25m	28	2.0	20m	655n		E101bn	PY1590
74	LTS5811R	.52	1	200u	10m	Red		NR	55m	25m	28	2.0	20m	655n		E101bo	PY1590
75	LTS546AP	.52	1	300u	10m	Red	CA	NR	40m	15m	28	2.8	20m	697n		E101t	PY1590
76	LTS547AP	.52	1	300u	10m	Red	CC	NR	40m	15m	28	2.8	20m	697n		E101u	PY1590
77	LTS5311P	.52	1	300u	10m	Red		NR	40m	15m	28	2.8	20m	697n		E101bn	PY1590
78	LTS5811P	.52	1	300u	10m	Red		NR	40m	15m	28	2.8	20m	697n		E101bo	PY1590
79	LTS546AY	.52	1	700u	10m	Yellow	CA	NR	60m	20m	28	2.8	20m	585n		E101t	PY1590
80	LTS547AY	.52	1	700u	10m	Yellow	CC	NR	60m	20m	28	2.8	20m	585n		E101u	PY1590
81	LTS5311Y	.52	1	700u	10m	Yellow		NR	60m	20m	28	2.8	20m	585n		E101bn	PY1590
82	LTS5811Y	.52	1	700u	10m	Yellow		NR	60m	20m	28	2.8	20m	585n		E101bo	PY1590
83	LTS546AE	.52	1	800u	10m	Orange	CA	NR	75m	25m	28	2.8	20m	630n		E101t	PY1590
84	LTS546AG	.52	1	800u	10m	Green	CA	NR	75m	25m	28	2.8	20m	565n		E101t	PY1590
85	LTS547AE	.52	1	800u	10m	Orange	CC	NR	75m	25m	28	2.8	20m	630n		E101u	PY1590
86	LTS547AG	.52	1	800u	10m	Green	CC	NR	75m	25m	28	2.8	20m	565n		E101u	PY1590
87	LTS5311E	.52	1	800u	10m	Orange		NR	75m	25m	28	2.8	20m	630n		E101bn	PY1590
88	LTS5311G	.52	1	800u	10m	Green		NR	75m	25m	28	2.8	20m	565n		E101bn	PY1590
89	LTS5811E	.52	1	800u	10m	Orange		NR	75m	25m	28	2.8	20m	630n		E101bo	PY1590
90	LTS5811G	.52	1	800u	10m	Green		NR	75m	25m	28	2.8	20m	565n		E101bo	PY1590
91	LTS546AHR	.52	1	900u	10m	Red	CA	NR	75m	25m	28	2.8	20m	635n		E101t	PY1590
92	LTS547AHR	.52	1	900u	10m	Red	CC	NR	75m	25m	28	2.8	20m	635n		E101u	PY1590
93	LTS5311HR	.52	1	900u	10m	Red		NR	75m	25m	28	2.8	20m	635n		E101bn	PY1590
94	LTS5811HR	.52	1	900u	10m	Red		NR	75m	25m	28	2.8	20m	635n		E101bo	PY1590
95	TLR358	.53	1		10m	Red	CC	NR		20m	27	2.5	10m	700n		E101n	PY1212
96	TLR359	.53	1		10m	Red	CA	NR		20m	27	2.5	10m	700n		E101m	PY1212
97	HD1132G	.53	1	260u	5.0mΔ	Green	CA	NR	60mΔ	20m	48%	2.4	5.0m	560n		E101ao	PY688 ⧄
98	HD1134G	.53	1	260u	5.0mΔ	Green	CC	NR	60mΔ	20m	48%	2.4	5.0m	560n		E101as	PY688 ⧄
99	TLR368	.53	1	0.7mΔ	5.0mΔ	Red	CC	NR		20m	38	2.5	10m	700n		E101u	PY1212
100	TLR369	.53	1	0.7mΔ	5.0mΔ	Red	CA	NR		20m	38	2.5	10m	700n		E101t	PY1212
101	TLG358	.53	1	1.0mΔ	10mΔ	Green	CC	NR		20m	38	2.5	10m	565n		E101n	PY1212
102	TLG359	.53	1	1.0mΔ	10mΔ	Green	CA	NR		20m	38	2.5	10m	565n		E101m	PY1212
103	TLG368	.53	1	1.0mΔ	10mΔ	Green	CC	NR		20m	38	2.5	10m	565n		E101u	PY1212
104	TLG369	.53	1	1.0mΔ	10mΔ	Green	CA	NR		20m	38	2.5	10m	565n		E101t	PY1212
105	HD1131Y	.53	1	1.3mΔ	20mΔ	Yellow	CA	NR	60mΔ	20m	48%	2.4	5.0m	590n	Tr/Tf 100ns Typ	E101j	PY977 ⧄
106	HD1132Y	.53	1*	1.3mΔ	20mΔ	Yellow	CA	PRV	60mΔ	20m	48%	2.4	5.0m	590n	Tr/Tf 100ns Typ	E101bi	PY688 ⧄
107	HD1133Y	.53	1	1.3mΔ	20mΔ	Yellow	CC	NR	60mΔ	20m	48%	2.4	5.0m	590n	Tr/Tf 100ns Typ	E101k	PY977 ⧄
108	HD1134Y	.53	1*	1.3mΔ	20mΔ	Yellow	CC	PRV	60mΔ	20m	48%	2.4	5.0m	590n	Tr/Tf 100ns Typ	E101as	PY977a⧄
109	HD1131G	.53	1	1.4mΔ	20mΔ	Green	CA	NR	60mΔ	20m	48%	2.4	5.0m	560n	Tr/Tf 50ns Typ	E101j	PY1370⧄
110	HD1131O	.53	1	1.4mΔ	20mΔ	Orange	CA	NR	60mΔ	20m	48%	2.4	5.0m	645n	Tr/Tf 100ns Typ	E101j	PY1370⧄

SYMBOLS AND CODES EXPLAINED IN INTERPRETER

35. LED CHARACTER DISPLAYS- Seven-Segment Numeric (Cont'd)

IN ORDER OF FONT AND: (1) CHAR. HEIGHT (2)NO. CHAR. (3) INTENSITY & (4) TYPE NO.

LINE No.	4 TYPE NUMBER	1 CHAR. HGHT (in)	2 NO. CHAR	3 LUMINOUS INTENSITY Iv MIN (cd)	IF TEST (A)	COLOR	CONN.	DISP NOMEN	PD RATED MAX (W)	IF RATED MAX (A)	TEMP RNGE CODE	FORWARD VOLTAGE VF MAX (V)	IF TEST (A)	PEAK WAVE-LENGTH λP (m)	FEATURES	DRAWINGS SCHE-MATIC	OUTLINE
1	HD1131R	.53	1	1.4mΔ	35mΔ	Red	CA	NR	60mΔ	35m	48%	2.0	10m	665n	Tr/Tf 5ns Typ	E101j	PY1370☑
2	HD1132O	.53	1*	1.4mΔ	20m	Orange	CA	PRV	60mΔ	20m	48%	2.4	5.0m	645n	Tr/Tf 100ns Typ	E101bi	PY1371☑
3	HD1132R	.53	1*	1.4mΔ	35mΔ	Red	CA	PRV	60mΔ	35m	48%	2.0	10m	665n	Tr/Tf 5ns Typ	E101bi	PY1371☑
4	HD1133G	.53	1	1.4m	20mΔ	Green	CC	NR	60mΔ	20m	48%	2.4	5.0m	560n		E101k	PY688 ☑
5	HD1133O	.53	1	1.4mΔ	20mΔ	Orange	CC	NR	60mΔ	20m	48%	2.4	5.0m	645n	Tr/Tf 100ns typ	E101k	PY1370☑
6	HD1133R	.53	1	1.4mΔ	35mΔ	Red	CC	NR	60mΔ	35m	48%	2.0	10m	665n	Tr/Tf 5ns Typ	E101k	PY1370☑
7	HD1134O	.53	1*	1.4mΔ	20mΔ	Orange	CC	PRV	60mΔ	20m	48%	2.4	5.0m	645n	Tr/Tf 100ns Typ	E101as	PY1371☑
8	HD1134R	.53	1*	1.4mΔ	35mΔ	Red	CC	PRV	60mΔ	35m	48%	2.0	10m	665n	Tr/Tf 5ns Typ	E101as	PY1371☑
9	HG1131G	.53	1	1.4mΔ	20mΔ	Green	CA	NR	60mΔ	20m	38%	2.4	5.0m	560n	Tr/Tf 50ns Typ	E101t	PY977 ☑
10	HG1132G	.53	1*	1.4mΔ	20mΔ	Green	CA	PRV	60mΔ	20m	48%	2.4	5.0m	560n	Tr/Tf 50ns Typ	E101aa	PY977a☑
11	HG1133G	.53	1	1.4mΔ	20mΔ	Green	CC	NR	60mΔ	20m	48%	2.4	5.0m	560n	Tr/Tf 50ns Typ	E101u	PY977 ☑
12	HG1134G	.53	1*	1.4mΔ	20mΔ	Green	CC	PRV	60mΔ	20m	48%	2.4	5.0m	560n	Tr/Tf 50ns Typ	E101as	PY977a☑
13	TLR329	.53	1.5		10mΔ	Red		NR		20m	27	2.5	10m	700n		E202k	PY1213
14	TLR328	.53	2		10mΔ	Red	CC	NR		20m	27	2.5	10m	700n		E202i	PY1213
15	TLG328	.53	2	.58mΔ	10mΔ	Green	CC	NR		20m	38	2.5	10m	565n		E202i	PY1213
16	TLG329	.53	2	.58mΔ	10mΔ	Green	CA	NR		20m	38	2.5	10m	565n		E202h	PY1213
17	HDSP5551	.55	1	270uΔ	2mΔ	Red	CA	NR	52mΔ	15m	48	2.5	20m	635n		E101j	PY856
18	HDSP5553	.55	1	270uΔ	2mΔ	Red	CC	NR	52mΔ	15m	48	2.5	20m	635n		E101k	PY856
19	HDSP5557	.55	1	270uΔ	2mΔ	Red		VR	52mΔ	15m	48	2.5	20m	635n		E101bs	PY856a
20	HDSP5558	.55	1	270uΔ	2mΔ	Red		VR	52mΔ	15m	48	2.5	20m	635n		E101bt	PY856a
21	HDSP5901	.55	1	270uΔ	10mΔ	Green	CA	NR	105mΔ	30m	28	2.5	10m	555n		E101j	PY856
22	HDSP5903	.55	1	270uΔ	10mΔ	Green	CC	NR	105mΔ	30m	28	2.5	10m	555n		E101k	PY856
23	HDSP5907	.55	1	270uΔ	10mΔ	Green		VR	105mΔ	30m	28	2.5	10m	555n		E101bs	PY856a
24	HDSP5908	.55	1	270uΔ	10mΔ	Green		VR	105mΔ	30m	28	2.5	10m	555n		E101bv	PY856a
25	LAA5610	.55	1	800uΔ	10mΔ	Red		NR	110m	20m	48	1.6 †	10m	655n		E101bm	PY1444
26	LAC5610	.55	1	800uΔ	10mΔ	Red	CC	NR	110m	20m	48	1.6 †	10m	655n		E101ah	PY1444
27	LAA5611	.55	1	1.3mΔ	10mΔ	Red		NR	120m	20m	48	1.9 †	10m	695n		E101bm	PY1444
28	LAC5611	.55	1	1.3mΔ	10mΔ	Red	CC	NR	120m	20m	48	1.9 †	10m	695n		E101ah	PY1444
29	LAA5613	.55	1	2.8mΔ	10mΔ	Yellow		NR	115m	20m	48	2.0 †	10m	585n		E101bm	PY1444
30	LAC5613	.55	1	2.8mΔ	10mΔ	Yellow	CC	NR	115m	20m	48	2.0 †	10m	585n		E101ah	PY1444
31	LAA5612	.55	1	3.5mΔ	10mΔ	Green		NR	115m	20m	48	2.0 †	10m	565n		E101bm	PY1444
32	LAA5614	.55	1	3.5mΔ	10mΔ	Orange		NR	115m	20m	48	2.0 †	10m	635n		E101bm	PY1444
33	LAC5612	.55	1	3.5mΔ	10mΔ	Green	CC	NR	115m	20m	48	2.0 †	10m	565n		E101ah	PY1444
34	LAC5614	.55	1	3.5mΔ	10mΔ	Orange	CC	NR	115m	20m	48	2.0 †	10m	635n		E101ah	PY1444
35	SL1263	.55	2	300u	5.0m	Red	CA	NR	700m	20m	27	1.9 †	5.0m	700n		E182p	PY1486
36	SL1264	.55	2	300u	5.0m	Red	CC	NR	700m	20m	27	1.9 †	5.0m	700n		E182d	PY1486
37	SL2263	.55	2	2.0m	15m	Green	CA	NR	800m	20m	27	2.0 †	15m	565n		E182p	PY1486
38	SL2264	.55	2	2.0m	15m	Green	CC	NR	800m	20m	27	2.0 †	15m	565n		E182d	PY1486
39	MAN6930	.56	.5	320n	10m	Red	CA	NV	1.0	420m	48	2.5	20m	635n		E182e	PY225
40	MAN6950	.56	.5	320n	10m	Red	CC	NV	1.0	420m	48	2.5	20m	635n	(+/-1.8); CC	E182f	PY225
41	CMN6730	.56	.5	125u	10m	Red	CA	NPR	840m	30m	48	2.0	20m			E182e	PY1347
42	MAN6730	.56	.5	125u	10m	Red	CA	NR	650m	260m	48	2.0	20m	650n		E182e	PY225
43	MAN6750	.56	.5	125u	10m	Red	CC	NRV	650m	260m	48	2.0	20m	650n	(+/-1.8); CC	E182f	PY225
44	A5612-12	.56	.5	200u	10m	Red	CA	NPR								E182e	PY225
45	C5612-12	.56	.5	200u	10m	Red	CC	NPR								E182f	PY225
46	LTD6730R	.56	.5	200u	10m	Red	CA	NVR	55m	25m	28	2.0	20m	655n		E182e	PY1381
47	LTD6750R	.56	.5	200u	10m	Red	CC	NVR	55m	25m	28	2.0	20m	655n		E182f	PY1381
48	LTS5307R	.56	.5*	200u	10m	Red		NVR	55m	25m	28	2.0	20m	655n	(+/-1.)	E101ai	PY1371
49	LTS5308R	.56	.5*	200u	10m	Red		NVR	55m	25m	28	2.0	20m	655n	(+/-1.)	E101aj	PY1371
50	LTD6730P	.56	.5	300u	10m	Red	CA	NVR	40m	15m	28	2.8	20m	697n		E182e	PY1381
51	LTD6750P	.56	.5	300u	10m	Red	CC	NVR	40m	15m	28	2.8	20m	697n		E182f	PY1381
52	CMN6930	.56	.5	320u	10m	Red	CA	NPR	1.1	30m	48	2.5	20m			E182e	PY1347a
53	CMN6950	.56	.5	320u	10m	Red	CC	NPR	1.1	30m	48	2.5	20m			E182f	PY1347a
54	MAN6450	.56	.5	320uΔ	10m	Green	CC	PR		30m	48	2.5	20m	565n		E182f	PY225a
55	LTS5307P	.56	.5*	350u	10m	Red		NVR	40m	15m	28	2.8	20m	697n	(+/-1.)	E101ai	PY1371
56	A5632-12	.56	.5	400u	10m	Yellow	CA	NPR								E182e	PY225
57	C5632-12	.56	.5	400u	10m	Yellow	CC	NPR								E182f	PY225
58	TLG364	.56	.5	0.4mΔ	5m	Green	OTHR	PR	50mΔ	20m	27*	2.5	10m	565n	(+/-1.)	E101ai	PY1215
59	A5622-12	.56	.5	450u	10m	Green	CA	NPR								E182e	PY225
60	C5622-12	.56	.5	450u	10m	Green	CC	NPR								E182f	PY225
61	MAN6530	.56	.5	510u	10m	Green	CA	NR	1.0	30m	48	2.5	20m	565n		E182e	PY225
62	MAN6550	.56	.5	510u	10m	Green	CC	NR	1.0	30m	48	2.5	20m	565n	(+/-1.8); CC	E182f	PY225
63	MAN6630	.56	.5	510u	10m	Orange	CA	NR	650m	260m	48	2.5	20m	630n		E182e	PY225
64	MAN6650	.56	.5	510u	10m	Orange	CC	NR	650m	260m	48	2.5	20m	630n	(+/-1.8); CC	E182f	PY225
65	LTD6830Y	.56	.5	700u	10m	Yellow	CA	NVR	60m	20m	28	2.8	20m	585n		E182e	PY1381
66	LTD6850Y	.56	.5	700u	10m	Yellow	CC	NVR	60m	20m	28	2.8	20m	585n		E182f	PY1381
67	LTS5707Y	.56	.5	750u	10m	Yellow		NVR	60m	20m	28	2.8	20m	585n	(+/-1.	E101ai	PY1371
68	LTD6430G	.56	.5	800u	10m	Green	CA	NVR	75m	25m	28	2.8	20m	565n		E182e	PY1381
69	LTD6450G	.56	.5	800u	10m	Green	CC	NVR	75m	25m	28	2.8	20m	565n		E182f	PY1381
70	LTD6630E	.56	.5	800u	10m	Orange	CA	NVR	75m	25m	28	2.8	20m	630n		E182e	PY1381
71	LTD6650E	.56	.5	800u	10m	Orange	CC	NVR	75m	25m	28	2.8	20m	630n		E182f	PY1381
72	LTD6950HR	.56	.5	800u	10m	Red	CC	NR	75m	25m	28	2.8	20m	635n		E182f	PY1381
73	HDSP5307	.56	.5	900uΔ	20m	Red	OTHR	NRV	65m	25m	48	2.0	20m	655n	(+/-1.)CC	E101aj	PY856 ☑
74	HDSP5308	.56	.5	900uΔ	20m	Red	OTHR	NRV	65m	25m	48	2.0	20m	655n	(+/-1.)CC	E101aj	PY856 ☑
75	LTS5507E	.56	.5*	900u	10m	Orange		NVR	75m	25m	28	2.8	20m	630n	(+/-1.)	E101ai	PY1371
76	A5642-12	.56	.5	1.0m	10m	Orange	CA	NPR								E182e	PY225
77	A5642R12	.56	.5	1.0m	10m	Red	CA	NPR								E182e	PY225
78	C5642-12	.56	.5	1.0m	10m	Orange	CC	NPR								E182f	PY225
79	C5642R12	.56	.5	1.0m	10m	Red	CC	NPR								E182f	PY225
80	TLR364	.56	.5	1.0mΔ	10mΔ	Green	OTHR	NRV		20m	27	2.5	10m	565n	(+/-1.)	E101ai	PY1215
81	HDSP5707	.56	.5	1.5mΔ	10m	Yellow	OTHR	NRV	81m	20m	48	2.5	20m	583n	(+/-1.);CC	E101aj	PY856a☑
82	HDSP5708	.56	.5	1.5mΔ	10m	Yellow	OTHR	NRV	81m	20m	48	2.5	20m	583n	(+/-1.);CC	E101aj	PY856a☑
83	HDSP5507	.56	.5	2.0mΔ	10m	Red	OTHR	NRV	81m	20m	48	2.5	20m	635n	(+/-1.);CC	E101aj	PY856 ☑
84	HDSP5508	.56	.5	2.0mΔ	10m	Red	OTHR	NRV	81m	20m	48	2.5	20m	635n	(+/-1.);CC	E101aj	PY856 ☑
85	LTD6930HR	.56	.5	2.0m	10m	Red	CA	NR								E182e	PY1381
86	HDSP5537	.56	.5	7.0m	100m	Red	OTHR	NRV	105mΔ	40m	48	3.5	100m	635n	(+/-1.);CC	E101aj	PY856a☑
87	HDSP5737	.56	.5	7.0m	100m	Yellow	OTHR	NRV	105mΔ	40m	48	3.5	100m	583n	(+/-1.);CC	E101aj	PY856a☑
88	HDSP5738	.56	.5	7.0m	100m	Yellow	OTHR	NRV	105mΔ	40m	48	3.5	100m	583n	(+/-1.);CC	E101aj	PY856a☑
89	MAN6960	.56	1	320n	10m	Red	CA	NR	600m	240m	48	2.5	20m	635n		E101t	PY225b
90	MAN6980	.56	1	320n	10m	Red	CC	NR	600m	240m	48	2.5	20m	635n		E101ah	PY225b
91	CMN6780	.56	1	125u	10m	Red		NR	480m	30m	48	2.0	20m			E101ah	PY5440
92	MAN6760	.56	1	125u	10m	Red	CA	NR	400m	160m	48	2.0	20m	650n		E101t	PY472 ☑
93	MAN6780	.56	1	125u	10m	Red	CC	NR	400m	160m	48	2.0	20m	650n		E101u	PY472 ☑
94	A5611-11	.56	1	200u	10m	Red	CA	NR								E101j	PY437d
95	C5611-11	.56	1	200u	10m	Red	CA	NR								E101t	PY437d
96	LTS5301R	.56	1	200u	10m	Red	CA	NR	55m	25m	28	2.0	20m	655n		E101t	PY1370
97	LTS5303R	.56	1	200u	10m	Red	CC	NR	55m	25m	28	2.0	20m	655n		E101u	PY1370
98	LTS6775R	.56	1	200u	10m	Red		NVR	55m	25m	28	2.0	20m	655n		E101bp	PY1371
99	LTS6780R	.56	1	200u	10m	Red	CC	NR	55m	25m	28	2.0	20m	655n		E101u	PY1372
100	LTS6795R	.56	1	200u	10m	Red		NVR	55m	25m	28	2.0	20m	655n		E101bq	PY1371
101	LTS6760P	.56	1	300u	10m	Red	CA	NR	40m	15m	28	2.8	20m	697n		E101t	PY1370
102	LTS6775P	.56	1	300u	10m	Red		NVR	40m	15m	28	2.8	20m	697n		E101bp	PY1371
103	LTS6780P	.56	1	300u	10m	Red	CC	NR	40m	15m	28	2.8	20m	697n		E101u	PY1370
104	LTS6795P	.56	1	300u	10m	Red		NVR	40m	15m	28	2.8	20m	697n		E101bq	PY1371
105	CMN6960	.56	1	320u	10m	Red	CA	NR	600m	30m	48	2.5	20m			E101t	PY544c
106	CMN6980	.56	1	320u	10m	Red		NR	600m	30m	48	2.5	20m			E101ah	PY544c
107	MAN6460	.56	1	320uΔ	10m	Green	CC	NR		30m	48	2.5	20m	565n		E101k	PY544a
108	LTS5301P	.56	1	350u	10m	Red	CA	NR	40m	15m	28	2.8	20m	697n		E101t	PY1370
109	LTS5303P	.56	1	350u	10m	Red	CC	NR	40m	15m	28	2.8	20m	697n		E101u	PY1370
110	LTS5308P	.56	1*	350u	10m	Red		NVR	40m	15m	28	2.8	20m	697n		E101ai	PY1371

SYMBOLS AND CODES EXPLAINED IN INTERPRETER

35. LED CHARACTER DISPLAYS - Seven-Segment Numeric (Cont'd)

IN ORDER OF FONT AND: (1) CHAR. HEIGHT (2)NO. CHAR. (3) INTENSITY & (4) TYPE NO.

LINE No.	4 TYPE NUMBER	1 CHAR. HGHT (in)	2 NO. CHAR	3 LUMINOUS INTENSITY Iv MIN (cd)	IF TEST (A)	COLOR	CONN.	DISP NOMEN	PD RATED MAX (W)	IF RATED MAX (A)	TEMP RNGE CODE - +	FORWARD VOLTAGE VF MAX (V)	IF TEST (A)	PEAK WAVE-LENGTH λP (m)	FEATURES	DRAWINGS SCHE-MATIC	OUTLINE
1	A5631-11	.56	1	400u	10m	Yellow	CA	NR								E101j	PY437d
2	C5631-11	.56	1	400u	10m	Yellow	CA	NR								E101t	PY437d
3	LTS6760R	.56	1	400u	10m	Red	CA	NR								E101t	None
4	TLG362	.56	1	0.4mΔ	5m	Green	CC	NR	50mΔ	20m	27*	2.5	10m	565n		E101u	PY1215
5	TLG363	.56	1	0.4mΔ	5m	Green	CA	NR	50mΔ	20m	27*	2.5	10m	565n		E101t	PY1215
6	TLG365	.56	1	0.4mΔ	5m	Green	OTHR	PR	50mΔ	20m	27*	2.5	10m	565n		E101aj	PY1215
7	A5621-11	.56	1	450u	10m	Green	CA	NR								E101j	PY437d
8	C5621-11	.56	1	450u	10m	Green	CA	NR								E101t	PY437d
9	CMN6680	.56	1	510u	10m	Orange		NR	1.2	30m	48	2.5	20m			E101ah	PY544c
10	MAN6560	.56	1	510u	10m	Green	CA	NR	600m	30m	48	2.5	20m	565n		E101t	PY225b
11	MAN6580	.56	1	510u	10m	Green	CC	NR	600m	30m	48	2.5	20m	565n		E101u	PY225b
12	MAN6660	.56	1	510u	10m	Orange	CA	NR	400m	160m	48	2.5	20m	630n		E101t	PY225b⊠
13	MAN6680	.56	1	510u	10m	Orange	CC	NR	400m	160m	48	2.5	20m	630n		E101u	PY225b⊠
14	LTS6860Y	.56	1	700u	10m	Yellow	CA	NR	60m	20m	28	2.8	20m	585n		E101t	PY1372
15	LTS6875Y	.56	1	700u	10m	Yellow		NVR	60m	20m	28	2.8	20m	585n		E101bp	PY1371
16	LTS6880Y	.56	1	700u	10m	Yellow	CC	NR	60m	20m	28	2.8	20m	585n		E101u	PY1372
17	LTS6895Y	.56	1	700u	10m	Yellow		NVR	60m	20m	28	2.8	20m	585n		E101bq	PY1371
18	LTS5701Y	.56	1	750u	10m	Yellow	CA	NR	60m	20m	28	2.8	20m	585n		E101t	PY1370
19	LTS5703Y	.56	1	750u	10m	Yellow	CC	NR	60m	20m	28	2.8	20m	585n		E101u	PY1370
20	LTS5708Y	.56	1*	750u	10m	Yellow		NVR	60m	20m	28	2.8	20m	585n		E101aj	PY1371
21	LTS6460G	.56	1	800u	10m	Green	CA	NR	75m	25m	28	2.8	20m	565n		E101t	PY1372
22	LTS6475G	.56	1	800u	10m	Green		NVR	75m	25m	28	2.8	20m	565n		E101bp	PY1371
23	LTS6480G	.56	1	800u	10m	Green	CC	NR	75m	25m	28	2.8	20m	565n		E101u	PY1372
24	LTS6495G	.56	1	800u	10m	Green		NVR	75m	25m	28	2.8	20m	565n		E101bq	PY1371
25	LTS6660E	.56	1	800u	10m	Orange	CA	NR	75m	25m	28	2.8	20m	630n		E101t	PY1372
26	LTS6675E	.56	1	800u	10m	Orange		NVR	75m	25m	28	2.8	20m	630n		E101bp	PY1371
27	LTS6680E	.56	1	800u	10m	Orange	CC	NR	75m	25m	28	2.8	20m	630n		E101u	PY1372
28	LTS6695E	.56	1	800u	10m	Orange		NVR	75m	25m	28	2.8	20m	630n		E101bq	PY1371
29	HDSP5301	.56	1	900uΔ	20m	Red	CA	NR	65m	25m	48	2.0	20m	655n		E101t	PY856 ⊠
30	HDSP5303	.56	1	900uΔ	20m	Red	CC	NR	65m	25m	48	2.0	20m	655n		E101u	PY856 ⊠
31	LTS5501E	.56	1	900u	10m	Orange	CA	NR	75m	25m	28	2.8	20m	630n		E101t	PY1370
32	LTS5503E	.56	1	900u	10m	Orange	CC	NR	75m	25m	28	2.8	20m	630n		E101u	PY1370
33	LTS5508E	.56	1*	900u	10m	Orange		NVR	75m	25m	28	2.8	20m	630n		E101aj	PY1371
34	LTS5801G	.56	1	900u	10m	Green	CA	NR	75m	25m	28	2.8	20m	565n		E101t	PY1370
35	LTS5803G	.56	1	900u	10m	Green	CC	NR	75m	25m	28	2.8	20m	565n		E101u	PY1370
36	LTS5807G	.56	1*	900u	10m	Green		NVR	75m	25m	28	2.8	20m	565n		E101aj	PY1371
37	LTS5808G	.56	1*	900u	10m	Green		NVR	75m	25m	28	2.8	20m	565n		E101aj	PY1371
38	LTS6960HR	.56	1	900u	10m	Red	CA	NR	75m	25m	28	2.8	20m	635n		E101t	PY1372
39	LTS6975HR	.56	1	900u	10m	Red		NVR	75m	25m	28	2.8	20m	635n		E101bp	PY1371
40	LTS6980HR	.56	1	900u	10m	Red	CC	NR	75m	25m	28	2.8	20m	635n		E101u	PY1372
41	LTS6995HR	.56	1	900u	10m	Red		NVR	75m	25m	28	2.8	20m	635n		E101bq	PY1371
42	A5641-11	.56	1	1.0m	10m	Orange	CA	NR								E101j	PY437d
43	A5641R11	.56	1	1.0m	10m	Red	CA	NR								E101j	PY437d
44	C5641-11	.56	1	1.0m	10m	Orange	CA	NR								E101t	PY437d
45	C5641R11	.56	1	1.0m	10m	Red	CA	NR								E101t	PY437d
46	TLR362	.56	1	1.0mΔ	10mΔ	Green	CC	NR		20m	27	2.5	10m	565n		E101u	PY1215
47	TLR363	.56	1	1.0mΔ	10mΔ	Green	CA	NR		20m	27	2.5	10m	565n		E101t	PY1215
48	TLR365	.56	1	1.0mΔ	10mΔ	Green	OTHR	NRV		20m	27	2.5	10m	565n		E101aj	PY1215
49	HDSP5601	.56	1	1.5m	10m	Green	CA	NR	105mΔ	30m	48	2.5	10m	566n		E101t	PY506
50	HDSP5603	.56	1	1.5m	10m	Green	CC	NR	105mΔ	30m	48	2.5	10m	566n		E101u	PY506
51	HDSP5701	.56	1	1.5mΔ	10m	Yellow	CA	NR	81m	20m	48	2.5	20m	583n		E101t	PY856 ⊠
52	HDSP5703	.56	1	1.5mΔ	10m	Yellow	CC	NR	81m	20m	48	2.5	20m	583n		E101u	PY856 ⊠
53	HDSP5501	.56	1	2.0mΔ	10m	Red	CA	NR	81m	20m	48	2.5	20m	635n		E101t	PY856 ⊠
54	HDSP5503	.56	1	2.0mΔ	10m	Red	CC	NR	81m	20m	48	2.5	20m	635n		E101u	PY856 ⊠
55	HDSP5531	.56	1	2.2m	100m	Red	CA	NR	105mΔ	40m	48	3.5	100m	635n		E101t	PY856 ⊠
56	HDSP5533	.56	1	2.2m	100m	Red	CC	NR	105mΔ	40m	48	3.5	100m	635n		E101ah	PY856 ⊠
57	HDSP5538	.56	1	2.2m	100m	Red	OTHR	NRP	105mΔ	40m	48	3.5	100m	635n		E101aj	PY856 ⊠
58	HDSP5731	.56	1	7.0m	100m	Yellow	CA	NR	105mΔ	40m	48	3.5	100m	583n		E101t	PY856 ⊠
59	HDSP5733	.56	1	7.0m	100m	Yellow	CC	NR	105mΔ	40m	48	3.5	100m	583n		E101ah	PY856 ⊠
60	MAN6940	.56	2	320n	10m	Red	CC	NR	1.2	480m	48	2.5	20m	635n		E182d	PY225
61	CMN6710	.56	2	125u	10m	Red	CA	NR	960m	30m	48	2.0	20m			E182c	PY225
62	CMN6740	.56	2	125u	10m	Red	CC	NR	960m	30m	48	2.0	20m			E182d	PY225
63	MAN6710	.56	2	125u	10m	Red	CA	NR	800m	320m	48	2.0	20m	650n		E182c	PY225
64	MAN6740	.56	2	125u	10m	Red	CC	NR	800m	320m	48	2.0	20m	650n		E182d	PY225
65	A5612-11	.56	2	200u	10m	Red	CA	NR								E182c	PY225
66	C5612-11	.56	2	200u	10m	Red	CC	NR								E182d	PY225
67	LTD6710R	.56	2	200u	10m	Red	CA	NR	55m	25m	28	2.0	20m	655n		E182c	PY1380
68	LTD6740R	.56	2	200u	10m	Red	CC	NR	55m	25m	28	2.0	20m	655n		E182d	PY1380
69	LTM8529R	.56	2	200u	.40m	Red		NRV	350m		26			655n	INT/OTHR	E182ah	PY1381
70	LTM8530R	.56	2	200u	.40m	Red		NR	350m		26			655n	INT/OTHR	E182ai	PY1380
71	LTD6710P	.56	2	300u	10m	Red	CA	NR	40m	15m	28	2.8	20m	697n		E182c	PY1380
72	LTD6740P	.56	2	300u	10m	Red	CC	NR	40m	15m	28	2.8	20m	697n		E182d	PY1380
73	LTM8529P	.56	2	300u	.40m	Red		NRV	350m		26			700n	INT/OTHR	E182ah	PY1381
74	LTM8530P	.56	2	300u	.40m	Red		NR	350m		26			700n	INT/OTHR	E182ai	PY1380
75	CMN6910	.56	2	320u	10m	Red	CA	NR	1.2	30m	48	2.5	20m			E182c	PY225
76	CMN6940	.56	2	320u	10m	Red	CC	NR	1.2	30m	48	2.5	20m			E182d	PY225
77	MAN6440	.56	2	320uΔ	10m	Green	CC	PR		30m	48	2.5	20m	565n		E182d	PY225
78	MAN6510	.56	2	320uΔ	10m	Green	CA	NR	960m	320m	48	3.0	20m	565n		E182c	PY225
79	MAN6540	.56	2	320uΔ	10m	Green	CC	NR	960m	320m	48	3.0	20m	565n		E182d	PY225
80	MAN6910	.56	2	320u	10m	Red	CA	NR	1.2	480m	48	2.5	20m	635n		E182c	PY225
81	A5632-11	.56	2	400u	10m	Yellow	CA	NR								E182c	PY225
82	C5632-11	.56	2	400u	10m	Yellow	CC	NR								E182d	PY225
83	TLG366	.56	2	0.4mΔ	5m	Green	CC	NR	50mΔ	20m	27*	2.5	10m	565n		E182d	PY1216
84	TLG367	.56	2	0.4mΔ	5m	Green	CA	NR	50mΔ	20m	27*	2.5	10m	565n		E182c	PY1216
85	A5622-11	.56	2	450u	10m	Green	CA	NR								E182c	PY225
86	C5622-11	.56	2	450u	10m	Green	CC	NR								E182d	PY225
87	CMN6640	.56	2	510u	10m	Orange	CC	NR	1.2	30m	48	2.5	20m			E182d	PY225
88	MAN6610(A)	.56	2	510u	10m	Orange	CA	NR	800m	320m	48	2.5	20m	630n		E182c	PY225
89	MAN6640(A)	.56	2	510u	10m	Orange	CC	NR	800m	320m	48	2.5	20m	630n		E182d	PY225
90	LTD6810Y	.56	2	700u	10m	Yellow	CA	NR	60m	20m	28	2.8	20m	585n		E182c	PY1380
91	LTD6840Y	.56	2	700u	10m	Yellow	CC	NR	60m	20m	28	2.8	20m	585n		E182d	PY1380
92	LTM8529Y	.56	2	700u	.40m	Yellow		NRV	660m		26			585n	INT/OTHR	E182ah	PY1381
93	LTM8530Y	.56	2	700u	.40m	Yellow		NR	660m		26			585n	INT/OTHR	E182ai	PY1380
94	LAA5710	.56	2	800uΔ	10mΔ	Red	CA	NR	110m	20m	48	1.6 †	10m	655n		E182c	PY1445
95	LAC5710	.56	2	800uΔ	10mΔ	Red	CC	NR	110m	20m	48	1.6 †	10m	655n		E182d	PY1445
96	LTD6410G	.56	2	800u	10m	Green	CA	NR	75m	25m	28	2.8	20m	565n		E182c	PY1380
97	LTD6440G	.56	2	800u	10m	Green	CC	NR	75m	25m	28	2.8	20m	565n		E182d	PY1380
98	LTD6610E	.56	2	800u	10m	Orange	CA	NR	75m	25m	28	2.8	20m	630n		E182c	PY1380
99	LTD6640E	.56	2	800u	10m	Orange	CC	NR	75m	25m	28	2.8	20m	630n		E182d	PY1380
100	LTD6940HR	.56	2	800u	10m	Red	CC	NVR	75m	25m	28	2.8	20m	635n		E182d	PY1380
101	LTM8529E	.56	2	800u	.40m	Orange		NRV	660m		26			630n	INT/OTHR	E182ah	PY1381
102	LTM8529G	.56	2	800u	.40m	Green		NRV	350m		26			565n	INT/OTHR	E182ah	PY1381
103	LTM8529HR	.56	2	800u	.40m	Red		NRV	660m		26			635n	INT/OTHR	E182ah	PY1381
104	LTM8530E	.56	2	800u	.40m	Orange		NR	660m		26			630n	INT/OTHR	E182ai	PY1380
105	LTM8530G	.56	2	800u	.40m	Green		NR	350m		26			565n	INT/OTHR	E182ai	PY1380
106	LTM8530HR	.56	2	800u	.40m	Red		NR	660m		26			635n	INT/OTHR	E182ai	PY1380
107	A5642-11	.56	2	1.0m	10m	Orange	CA	NR								E182c	PY225
108	A5642R11	.56	2	1.0m	10m	Red	CA	NR								E182c	PY225
109	C5642-11	.56	2	1.0m	10m	Orange	CC	NR								E182d	PY225
110	C5642R11	.56	2	1.0m	10m	Red	CC	NR								E182d	PY225

SYMBOLS AND CODES EXPLAINED IN INTERPRETER

35. LED CHARACTER DISPLAYS - Seven-Segment Numeric (Cont'd)

IN ORDER OF FONT AND: (1) CHAR. HEIGHT (2)NO. CHAR. (3) INTENSITY & (4) TYPE NO.

LINE No.	4 TYPE NUMBER	1 CHAR. HGHT (in)	2 NO. CHAR	3 LUMINOUS INTENSITY Iv MIN (cd)	IF TEST (A)	COLOR	CONN.	DISP NOMEN	PD RATED MAX (W)	IF RATED MAX (A)	TEMP RNGE CODE	FORWARD VOLTAGE VF MAX (V)	IF TEST (A)	PEAK WAVE-LENGTH λP (m)	FEATURES	DRAWINGS SCHE-MATIC	OUTLINE
1	TLR366	.56	2	1.0mΔ	10mΔ	Green	CC	NR		20m	27	2.5	10m	565n		E182d	PY1216
2	TLR367	.56	2	1.0mΔ	10mΔ	Green	CA	NR		20m	27	2.5	10m	565n		E182c	PY1216
3	HDSP5321	.56	2	1.2m	20m	Red	CA	NR	60mΔ	25m	48	2	20m	655n		E182c	PY508
4	HDSP5323	.56	2	1.2m	20m	Red	CC	NR	60mΔ	25m	48	2	20m	655n		E182d	PY508
5	LAA5711	.56	2	1.3mΔ	10mΔ	Red	CA	NR	120m	20m	48	1.9 †	10m	695n		E182c	PY1445
6	LAC5711	.56	2	1.3mΔ	10mΔ	Red	CC	NR	120m	20m	48	1.9 †	10m	695n		E182d	PY1445
7	HDSP5621	.56	2	1.5m	10m	Green	CA	NR	105mΔ	30m	48	2.5	10m	566n		E182c	PY508
8	HDSP5623	.56	2	1.5m	10m	Green	CC	NR	105mΔ	30m	48	2.5	10m	566n		E182d	PY508
9	HDSP5721	.56	2	1.8m	10m	Green	CA	NR	80mΔ	20m	48	2.5	20m	583n		E182c	PY506
10	HDSP5723	.56	2	1.8m	10m	Green	CC	NR	80mΔ	20m	48	2.5	20m	583n		E182d	PY508
11	LTD6910HR	.56	2	2.0m	10m	Red	CA	NR								E182c	PY1380
12	HDSP5521	.56	2	2.5m	10m	Red	CA	NR	105mΔ	30m	48	2.5	20m	635n		E182c	PY508
13	HDSP5523	.56	2	2.5m	10m	Red	CC	NR	105mΔ	30m	48	2.5	20m	635n		E182d	PY508
14	LAA5713	.56	2	2.8mΔ	10mΔ	Yellow	CA	NR	115m	20m	48	2.0 †	10m	585n		E182c	PY1445
15	LAC5713	.56	2	2.8mΔ	10mΔ	Yellow	CC	NR	115m	20m	48	2.0 †	10m	585n		E182d	PY1445
16	LAA5712	.56	2	3.5mΔ	10mΔ	Green	CA	NR	115m	20m	48	2.0 †	10m	565n		E182c	PY1445
17	LAA5714	.56	2	3.5mΔ	10mΔ	Orange	CA	NR	115m	20m	48	2.0 †	10m	635n		E182c	PY1445
18	LAC5712	.56	2	3.5mΔ	10mΔ	Green	CC	NR	115m	20m	48	2.0 †	10m	565n		E182d	PY1445
19	LAC5714	.56	2	3.5mΔ	10mΔ	Orange	CC	NR	115m	20m	48	2.0 †	10m	635n		E182d	PY1445
20	LTC561R	.56	3	200u	10m	Red	CA	NR	55m	25m	28	2.0	20m	655n	CA Multplx	E123f	PY1382
21	LTC571R	.56	3	200u	10m	Red	CC	NR	55m	25m	28	2.0	20m	655n	CC Multplx	E123g	PY1382
22	LTM8522R	.56	3	200u	.40m	Red		NR	350m		26			655n	INT/OTHR	E183a	PY1382
23	M5613-11	.56	3	200u	10m	Red	CC	NR								E123e	PY1204
24	N5613-11	.56	3	200u	10m	Red	CA	NR								E123d	PY1204
25	LTM8522P	.56	3	300u	.40m	Red		NR	350m		26			700n	INT/OTHR	E183a	PY1382
26	M5633-11	.56	3	400u	10m	Yellow	CC	NR								E123e	PY1204
27	N5633-11	.56	3	400u	10m	Yellow	CA	NR								E123d	PY1204
28	M5623-11	.56	3	450u	10m	Green	CC	NR								E123e	PY1204
29	N5623-11	.56	3	450u	10m	Green	CA	NR								E123d	PY1204
30	LTC561Y	.56	3	700u	10m	Yellow	CA	NR	60m	20m	28	2.8	20m	585n	CA Multplx	E123f	PY1382
31	LTC571Y	.56	3	700u	10m	Yellow	CC	NR	60m	20m	28	2.8	20m	585n	CC Multplx	E123g	PY1382
32	LTM8522Y	.56	3	700u	.40m	Yellow		NR	350m		26			585n	INT/OTHR	E183a	PY1382
33	LTC561E	.56	3	800u	10m	Orange	CA	NR	75m	25m	28	2.8	20m	630n	CA Multplx	E123f	PY1382
34	LTC561G	.56	3	800u	10m	Green	CA	NR	75m	25m	28	2.8	20m	565n	CA Multplx	E123f	PY1382
35	LTC561HR	.56	3	800u	10m	Red	CA	NR	75m	25m	28	2.8	20m	635n	CA Multplx	E123f	PY1382
36	LTC571E	.56	3	800u	10m	Orange	CC	NR	75m	25m	28	2.8	20m	630n	CC Multplx	E123g	PY1382
37	LTC571G	.56	3	800u	10m	Green	CC	NR	75m	25m	28	2.8	20m	565n	CC Multplx	E123g	PY1382
38	LTC571HR	.56	3	800u	10m	Red	CC	NR	75m	25m	28	2.8	20m	635n	CC Multplx	E123g	PY1382
39	LTM8522E	.56	3	800u	.40m	Orange		NR	660m		26			630n	INT/OTHR	E183a	PY1382
40	LTM8522G	.56	3	800u	.40m	Green		NR	350m		26			565n	INT/OTHR	E183a	PY1382
41	LTM8522HR	.56	3	800u	.40m	Red		NR	660m		26			635n	INT/OTHR	E183a	PY1382
42	M5643-11	.56	3	1.0m	10m	Orange	CC	NR								E123e	PY1204
43	M5643R11	.56	3	1.0m	10m	Red	CC	NR								E123e	PY1204
44	N5643-11	.56	3	1.0m	10m	Orange	CA	NR								E123d	PY1204
45	N5643R11	.56	3	1.0m	10m	Red	CA	NR								E123d	PY1204
46	LN516RA	.57	1	300u	5.0m	Red	CA	NR	50m	20m	27	2.1 †	20m	700n		E101t	PY176h
47	LN516RK	.57	1	300u	5.0m	Red	CC	NR	50m	20m	27	2.1 †	20m	700n		E101u	PY176h
48	LN516YA	.57	1	300u	10m	Orange	CA	NR	50m	20m	38%	2.8	20m	590n		E101t	PY176h
49	LN516YK	.57	1	300u	10m	Orange	CC	NR	50m	20m	38%	2.8	20m	590n		E101u	PY176h
50	LN516GA	.57	1	500u	10m	Green	CA	NR	50m	20m	27	2.1 †	20m	560n		E101t	PY176h
51	LN516GK	.57	1	500u	10m	Green	CC	NR	50m	20m	27	2.1 †	20m	560n		E101u	PY176h
52	LN516OA	.57	1	1.2m	10m	Orange	CA	NR	50m	20m	38%	2.8	20m	630n		E101t	PY176h
53	LN516OK	.57	1	1.2m	10m	Orange	CC	NR	50m	20m	38%	2.8	20m	630n		E101u	PY176h
54	LN526RA	.57	2	300u	10m	Red	CA	NR	50m	20m	27	2.1 †	20m	700n		E182p	PY225e
55	LN526RK	.57	2	300u	10m	Red	CC	NR	50m	20m	27	2.1 †	20m	700n		E182d	PY225e
56	LN526YA	.57	2	300u	10m	Orange	CA	NR	60m	20m	38%	2.8	20m	590n		E182p	PY225e
57	LN526YK	.57	2	300u	10m	Orange	CC	NR	60m	20m	38%	2.8	20m	590n		E182d	PY225e
58	LN526GA	.57	2	500u	10m	Green	CA	NR	50m	20m	27	2.1 †	20m	560n		E182p	PY225e
59	LN526GK	.57	2	500u	10m	Green	CC	NR	50m	20m	27	2.1 †	20m	560n		E182d	PY225e
60	GL4R06A	.59	.5	170u	20m	Red	CC	PR	300m	25m	27	2.0	20m	655n	(+/-1.)	E141av	PY64k
61	LTR306	.59	1	0.3m	10m	Red	CA	NR	750m	35m	27	2.8	30m	700n		E101at	PY891 ☑
62	LTR308	.59	1	0.3m	10m	Red	CC	NR	750m	35m	27	2.8	30m	700n	CoM Ka	E101au	PY891 ☑
63	TLR306	.59	1	300u	10m	Red	CA	NR	750m	35m	27	2.8	30m	700n		E101e	PY104 ☑
64	TLR308	.59	1	300u	10m	Red	CC	NR	750m	35m	27	2.8	30m	700n		E101c	PY104 ☑
65	SL1160L	.59	1	750u	5.0m	Red	CC	NR	300m	20m	27	1.9 †	5.0m	700n		E101c	PY1480
66	SL1169L	.59	1	750u	5.0m	Red	CA	NR	300m	20m	27	1.9 †	5.0m	700n		E101e	PY1480
67	LAA6010	.59	1	800uΔ	10mΔ	Red	CA	NR	110m	20m	48	1.6 †	10m	655n		E101e	PY1373a
68	LAC6010	.59	1	800uΔ	10mΔ	Red	CC	NR	110m	20m	48	1.6 †	10m	655n		E101c	PY1373a
69	LAA6011	.59	1	1.3mΔ	10mΔ	Red	CA	NR	120m	20m	48	1.9 †	10m	695n		E101e	PY1373a
70	LAC6011	.59	1	1.3mΔ	10mΔ	Red	CC	NR	120m	20m	48	1.9 †	10m	695n		E101c	PY1373a
71	SL2160G	.59	1	1.5m	15m	Green	CC	NR	300m	20m	27	2.0 †	15m	565n		E101c	PY1480
72	SL2169G	.59	1	1.5m	15m	Green	CA	NR	300m	20m	27	2.0 †	15m	565n		E101e	PY1480
73	LAA6013	.59	1	2.8mΔ	10mΔ	Yellow	CA	NR	115m	20m	48	2.0 †	10m	585n		E101e	PY1373a
74	LAC6013	.59	1	2.8mΔ	10mΔ	Yellow	CC	NR	115m	20m	48	2.0 †	10m	585n		E101c	PY1373a
75	LAA6012	.59	1	3.5mΔ	10mΔ	Green	CA	NR	115m	20m	48	2.0 †	10m	565n		E101e	PY1373a
76	LAA6014	.59	1	3.5mΔ	10mΔ	Orange	CA	NR	115m	20m	48	2.0 †	10m	635n		E101e	PY1373a
77	LAC6012	.59	1	3.5mΔ	10mΔ	Green	CC	NR	115m	20m	48	2.0 †	10m	565n		E101c	PY1373a
78	LAC6014	.59	1	3.5mΔ	10mΔ	Orange	CC	NR	115m	20m	48	2.0 †	10m	635n		E101c	PY1373a
79	SL1161	.59	1	220m		Red	CA	NR	600m	20m	27	1.9 †	5.0m	700u		E101e	PY1479
80	SL1162	.59	1	220m		Red	CC	NR	600m	20m	27	1.9 †	5.0m	700u		E101c	PY1479
81	SL2161	.59	1	250m		Green	CA	NR	600m	25m	27	2.0 †	15m	565u		E101e	PY1479
82	SL2162	.59	1	250m		Green	CC	NR	600m	25m	27	2.0 †	15m	565u		E101c	PY1479
83	SL1261-01	.59	2	220u	5.0m	Red		NR	700m	20m	27	1.9 †	5.0m	700n		E202n	PY1484
84	SL1262-01	.59	2	220u	5.0m	Red		NR	700m	20m	27	1.9 †	5.0m	700n		E202p	PY1484
85	SL2261-01	.59	2	450u	15m	Green		NR	700m	30m	26	2.0 †	15m	565n		E202n	PY1484
86	SL2262-01	.59	2	450u	15m	Green		NR	700m	30m	26	2.0 †	15m	565n		E202p	PY1484
87	SL2240G	.59	2	1.5m	15m	Green		NR	700m	20m	26	2.0 †	15m	565n		E182ak	PY1485
88	SL2249G	.59	2	1.5m	15m	Green		NR	700m	20m	26	2.0 †	15m	565n		E182am	PY1485
89	CQ4-32	.59	4	200u	10m	Red		FM		600m	26	2.3	10m	700n		None	PY596
90	CQ327	.59	4	200u	5m	Red		N		20m	26§	2.3	10m	700n		None ♦	PY811
91	CQ327R	.59	4	200u	5m	Red		N		20m	26§	2.3	10m	700n		None ♦	PY811
92	CQ330	.59	4	200u	5m	Red		N		20m	26§	2.3	10m	700n		None ♦	PY811
93	CQ330R	.59	4	200u	5m	Red		N		20m	26§	2.3	10m	700n		None ♦	PY811
94	CQ331	.59	4	200u	5m	Red		N		20m	26§	2.3	10m	700n		None ♦	PY811
95	CQ331R	.59	4	200u	5m	Red		N		20m	26§	2.3	10m	700n		None ♦	PY811
96	CQ332	.59	4	200u	5m	Red		N		20m	26§	2.3	10m	700n		None ♦	PY811
97	CQ332R	.59	4	200u	5m	Red		N		20m	26§	2.3	10m	700n		None ♦	PY811
98	CQ427	.59	4	200u	5m	Red		N		20m	26§	2.3	10m	700n		None ♦	PY308
99	CQ427R	.59	4	200u	5m	Red		N		20m	26§	2.3	10m	700n		None ♦	PY308
100	CQ430	.59	4	200u	5m	Red		N		20m	26§	2.3	10m	700n		None ♦	PY308
101	CQ430R	.59	4	200u	5m	Red		N		20m	26§	2.3	10m	700n		None ♦	PY308
102	CQ431	.59	4	200u	5m	Red		N		20m	26§	2.3	10m	700n		None ♦	PY308
103	CQ431R	.59	4	200u	5m	Red		N		20m	26§	2.3	10m	700n		None ♦	PY308
104	CQ432	.59	4	200u	5m	Red		N		20m	26§	2.3	10m	700n		None ♦	PY308
105	CQ432R	.59	4	200u	5m	Red		N		20m	26§	2.3	10m	700n		None ♦	PY308
106	LTR4224	.59	4	0.2m	10m	Red	CC	NC		15m	26	2.5	10m	700n	Com Ka	E344t	PY770 ☑
107	SL1015-41T	.59	4	200u	10m	Red		NRKC	1.0	15m	26	1.9 †	5.0m	700n		None	PY1522
108	SL1423	.59	4	200u	5.0m	Red		NK	1.4	20m	26	1.9 †	5.0m	700n		None	PY1519
109	SL1424	.59	4	200u	5.0m	Red		NK	1.4	20m	26	1.9 †	5.0m	700n		None	PY1519
110	SL1447	.59	4	200u	5.0m	Red		NRK	1.2	15m	26	1.9 †	5.0m	700n		None	PY1521

SYMBOLS AND CODES EXPLAINED IN INTERPRETER

35. LED CHARACTER DISPLAYS - Seven-Segment Numeric (Cont'd)

IN ORDER OF FONT AND: (1) CHAR. HEIGHT (2)NO. CHAR. (3) INTENSITY & (4) TYPE NO.

LINE No.	4 TYPE NUMBER	1 CHAR. HGHT (in)	2 NO. CHAR	3 LUMINOUS INTENSITY Iv MIN (cd)	IF TEST (A)	COLOR	CONN.	DISP NOMEN	PD RATED MAX (W)	IF RATED MAX (A)	TEMP RNGE CODE - +	FORWARD VOLTAGE VF MAX (V)	IF TEST (A)	PEAK WAVE-LENGTH λP (m)	FEATURES	DRAWINGS SCHE-MATIC	OUTLINE
1	SL2424	.59	4	250u	15m	Green		NK	2.2	30m	26	2.0 †	15m	565n		None	PY1519
2	SL1493T	.59	4	300u	10m	Red		NRK	1.1	15m	26	1.9 †	5.0m	700n		None	PY1516
3	SL1494T	.59	4	300u	10m	Red		NRK	1.1	15m	26	1.9 †	5.0m	700n		None	PY1516
4	SL1497T	.59	4	300u	15m	Red		NRKE	1.1	30m	26	1.9 †	5.0m	700n		None	PY1517
5	SL1498T	.59	4	300u	15m	Red		NRKE	1.1	30m	26	1.9 †	5.0m	700n		None	PY1517
6	SL2015-41T	.59	4	300u	15m	Green		NRKC	1.3	20m	26	2.0 †	15m	565n		None	PY1522
7	SL2447	.59	4	350u	15m	Green		NRK	1.0	30m	26	2.0 †	15m	565n		None	PY1521
8	SL1450L	.59	4	700u	5.0m	Red		NK	1.1	15m	26	1.9 †	5.0m	700n		None	PY1518
9	SL1459L	.59	4	700u	5.0m	Red		NK	1.1	15m	26	1.9 †	5.0m	700n		None	PY1518
10	SL1490L	.59	4	1.0m	10m	Red		NK	1.1	15m	26	1.9 †	5.0m	700n		None	PY1520
11	SL1499L	.59	4	1.0m	10m	Red		NK	1.1	15m	26	1.9 †	5.0m	700n		None	PY1520
12	SL2450G	.59	4	1.3m	15m	Green		NK	2.3	30m	26	2.0 †	15m	565n		None	PY1518
13	SL2459G	.59	4	1.3m	15m	Green		NK	2.3	30m	26	2.0 †	15m	565n		None	PY1518
14	SL2490G	.59	4	1.4m	15m	Green		NK	2.2	30m	26	2.0 †	15m	565n		None	PY1520
15	SL2499G	.59	4	1.4m	15m	Green		NK	2.2	30m	26	2.0 †	15m	565n		None	PY1520
16	SL2562	.59	5	150u	15m	Green		NRK	2.4	25m	26	2.0 †	15m	565n		None	PY1527
17	SL1562	.59	5	200u	10m	Red		NRK	1.8	20m	26	1.9 †	5.0m	700n		None	PY1527
18	730-6004	.60	1			Red		NR	208m	30m	07	2.0 †	13m			None	PY559a☑
19	730-6009	.60	1			Red		NR	208m	30m	07	2.0 †	13m			None	PY559 ☑
20	730-6010	.60	1			Red		P	104m	30m	07	2.0 †	13m			None	PY560 ☑
21	TLG306	.60	1	90u	10m	Green	CA	NR		20m	37	2.5	10m	5655n	COMMON A	E101e	PY104
22	TLG308	.60	1	90u	10m	Green	CC	NR		20m	37	2.5	10m	565n	COMMON K	E101c	PY104
23	GL8N06	.60	1	0.2m	10m	Green		N		15m	37	2.5	10m	565n		None	None
24	GL9N06	.60	1	0.2m	10m	Green		N		15m	37	2.5	10m	565n		None	None
25	GL9N06A	.60	1	0.2m	10m	Green		A		15m	37	2.5	10m	565n		None	None
26	730-6001	.60	1	300u△	10m△	Red	CC	NR	600m	30m	27	2.8	10m	700n		E101c	PY104a☑
27	730-6003	.60	1	300u	10m	Red	CC	NR		30m	27	2.8	10m	700n		E101c	PY104a
28	730-6005	.60	1	300u△	10m△	Red	CA	P	400m	30m	27	2.8	10m	700n		E101i	PY437e
29	LTS306P	.60	1	300u	10m	Red	CA	NR	40m	15m	28	2.8	20m	697n		E101e	PY1373
30	LTS307P	.60	1	300u	10m	Red	CA	P	40m	15m	28	2.8	20m	697n		E101i	PY1374
31	LTS308P	.60	1	300u	10m	Red	CC	NR	40m	15m	28	2.8	20m	697n		E101c	PY1373
32	LTS309P	.60	1	300u	10m	Red	CC	P	40m	15m	28	2.8	20m	697n		E101h	PY1374
33	MS162A	.60	1	350u	20m	Red	CA	N				2.6	20m	700n		E101ba	PY176d
34	MS161A	.60	1	400u	10m	Red		N	300m	20m	27	1.7	10m	585n		None ♦	PY176d
35	MS161C	.60	1	400u	10m	Red		N	300m	20m	27	1.7	10m	585n		None ♦	PY176d
36	MS162C	.60	1	400u	10m	Red		N	300m	20m	27	1.7 †	10m	660n	Supf Bright	None	PY176d
37	GL8D06	.60	1	700u	10m	Red	CC	NR		20m	37	2.2	10m	635		E141u	PY64k
38	LTS306G	.60	1	800u	10m	Green	CA	NR	75m	25m	28	2.8	20m	565n		E101e	PY1373
39	LTS306HR	.60	1	800u	10m	Red	CA	NR	75m	25m	28	2.8	20m	635n		E101e	PY1373
40	LTS307G	.60	1	800u	10m	Green	CA	P	75m	25m	28	2.8	20m	565n		E101i	PY1374
41	LTS307HR	.60	1	800u	10m	Red	CA	P	75m	25m	28	2.8	20m	635n		E101i	PY1374
42	LTS308G	.60	1	800u	10m	Green	CC	NR	75m	25m	28	2.8	20m	565n		E101c	PY1373
43	LTS308HR	.60	1	800u	10m	Red	CC	NR	75m	25m	28	2.8	20m	635n		E101c	PY1373
44	LTS309G	.60	1	800u	10m	Green	CC	P	75m	25m	28	2.8	20m	565n		E101h	PY1374
45	LTS309HR	.60	1	800u	10m	Red	CC	P	75m	25m	28	2.8	20m	635n		E101h	PY1374
46	NAG161	.60	1*	1.0m		Green		NR	63m	25m	48	2.5	20m	555n	Black Face	E101t	PY1373☑
47	NAG163	.60	1*	1.0m		Green	CA	NR	63m	25m	48	2.5	20m	555n	Gray Face	E101t	PY1373☑
48	NKG161	.60	1*	1.0m		Green	CC	NR	63m	25m	48	2.5	20m	555n	Black Face	E101u	PY1373☑
49	NKG163	.60	1*	1.0m		Green	CC	NR	63m	25m	48	2.5	20m	555n	Gray Face	E101u	PY1373☑
50	NSG161	.60	1*	1.0m		Green	OTHR	PN	63m	25m	48	2.5	20m	555n	Black Face	E101bw	PY1606☑
51	NSG163	.60	1*	1.0m		Green	OTHR	PN	63m	25m	48	2.5	20m	555n	Gray Face	E101bw	PY1606☑
52	NAA161	.60	1*	2.0m		Orange	CA	NR	63m	25m	48	2.5	20m	605n	Black Face	E101t	PY1373☑
53	NAA163	.60	1*	2.0m		Orange	CA	NR	63m	25m	48	2.5	20m	605n	Gray Face	E101t	PY1373☑
54	NAY161	.60	1*	2.0m		Yellow	CA	NR	63m	25m	48	2.5	20m	580n	Black Face	E101t	PY1373☑
55	NAY163	.60	1*	2.0m		Yellow	CA	NR	63m	25m	48	2.5	20m	580n	Gray Face	E101t	PY1373☑
56	NKA161	.60	1*	2.0m		Orange	CC	NR	63m	25m	48	2.5	20m	605n	Black Face	E101u	PY1373☑
57	NKA163	.60	1*	2.0m		Orange	CC	NR	63m	25m	48	2.5	20m	605n	Gray Face	E101u	PY1373☑
58	NKY161	.60	1*	2.0m		Yellow	CC	NR	63m	25m	48	2.5	20m	580n	Black Face	E101u	PY1373☑
59	NKY163	.60	1*	2.0m		Yellow	CC	NR	63m	25m	48	2.5	20m	580n	Gray Face	E101u	PY1373☑
60	NSA161	.60	1*	2.0m		Orange	OTHR	PN	63m	25m	48	2.5	20m		Black Face	E101bw	PY1606
61	NSA163	.60	1*	2.0m		Orange	OTHR	PN	63m	25m	48	2.5	20m	605n	Gray Face	E101bw	PY1606☑
62	NSY161	.60	1*	2.0m		Yellow	OTHR	PN	63m	25m	48	2.5	20m	580n	Black Face	E101bw	PY1606☑
63	NSY163	.60	1*	2.0m		Yellow	OTHR	PN	63m	25m	48	2.5	20m	580n	Gray Face	E101bw	PY1606☑
64	NAR161	.60	1*	3.0m	20m	Red	CA	NR	60m	30m	48	2.0	20m	660n	Black Face	E101t	PY1373☑
65	NAR163	.60	1*	3.0m	20m	Red	CA	NR	60m	30m	48	2.0	20m	660n	Gray Face	E101t	PY1373☑
66	NKR161	.60	1*	3.0m	20m	Red	CC	NR	60m	30m	48	2.0	20m	660n	Black Face	E101u	PY1373☑
67	NKR163	.60	1*	3.0m	20m	Red	CC	NR	60m	30m	48	2.0	20m	660n	Gray Face	E101u	PY1373☑
68	NSR161	.60	1*	3.0m	20m	Red	OTHR	PN	60m	30m	48	2.0	20m	660n	Black Face	E101bw	PY1606☑
69	NSR163	.60	1*	3.0m	20m	Red	OTHR	PN	60m	30m	48	2.0	20m	660	Gray Face	E101bw	PY1606☑
70	LTC614A1P12	.60	1.5			Red		NK							(+/-1.8)	E224d	PY1404
71	LTC624A1P12	.60	1.5			Red		NK							(+/-1.8)	E224e	PY1406
72	DM6003	.60	2	250u	10m△	Red	CA	NP	280m	20m	27	3.0	10m	630n		E102c	None
73	DM6004	.60	2	250u	10m△	Red	CC	NP	280m	20m	27	3.0	10m	630n		E102d	None
74	DM6009	.60	2	250u	10m△	Red	CA	NB	280m	20m	27	3.0	10m	630n		E102e	None
75	DM6010(2)	.60	2	250u	10m△	Red	OTHR	NB	280m	20m	27	3.0	10m	630n		E102f	None
76	739-0261-601	.60	2	300u△	10m△	Red	CA	NR	750m	30m	28	2.8	10m	700n		E104zz	PY373 ☑
77	739-0261-602	.60	2	300u△	10m△	Red	CA	NPR	750m	30m	28	2.8	10m	700n		E104zz	PY373h☑
78	MS261A	.60	2	400u		Red		N				1.7	10m			None ♦	PY843
79	MS261C	.60	2	400u		Red		N				1.7	10m		ComKa	None ♦	PY843
80	NAG261	.60	2*	1.0m		Green	CA	NR	63m	25m	48	2.5	20m	555n	Black Face	E182c	PY1486☑
81	NAG263	.60	2*	1.0m		Green	CA	NR	63m	25m	48	2.5	20m	555n	Gray Face	E182c	PY1486☑
82	NKG261	.60	2*	1.0m		Green	CC	NR	63m	25m	48	2.5	20m	555n	Black Face	E182d	PY1486☑
83	NKG263	.60	2*	1.0m		Green	CC	NR	63m	25m	48	2.5	20m	555n	Gray Face	E182d	PY1486☑
84	NAA261	.60	2*	2.0m		Orange	CA	NR	63m	25m	48	2.5	20m	605n	Black Face	E182c	PY1486☑
85	NAA263	.60	2*	2.0m		Orange	CA	NR	63m	25m	48	2.5	20m	605n	Gray Face	E182c	PY1486☑
86	NAY261	.60	2*	2.0m		Yellow	CA	NR	63m	25m	48	2.5	20m	580n	Black Face	E182c	PY1486☑
87	NAY263	.60	2*	2.0m		Yellow	CA	NR	63m	25m	48	2.5	20m	580n	Gray Face	E182c	PY1486☑
88	NKA261	.60	2*	2.0m		Orange	CC	NR	63m	25m	48	2.5	20m	605n	Black Face	E182d	PY1486☑
89	NKA263	.60	2*	2.0m		Orange	CC	NR	63m	25m	48	2.5	20m	605n	Gray Face	E182d	PY1486☑
90	NKY261	.60	2*	2.0m		Yellow	CC	NR	63m	25m	48	2.5	20m	580n	Black Face	E182d	PY1486☑
91	NKY263	.60	2*	2.0m		Yellow	CC	NR	63m	25m	48	2.5	20m	580n	Gray Face	E182d	PY1486☑
92	NAR261	.60	2*	3.0m	20m	Red	CA	NR	60m	30m	48	2.0	20m	660n	Black Face	E182c	PY1486☑
93	NAR263	.60	2*	3.0m	20m	Red	CA	NR	60m	30m	48	2.0	20m	660n	Gray Face	E182c	PY1486☑
94	NKR261	.60	2*	3.0m	20m	Red	CC	NR	60m	30m	48	2.0	20m	660n	Black Face	E182d	PY1486☑
95	NKR263	.60	2*	3.0m	20m	Red	CC	NR	60m	30m	48	2.0	20m	660n	Gray Face	E182d	PY1486☑
96	LTC637A1	.60	3*			Red	CC	NC								E304s	PY1390
97	739-0361-601	.60	3	300u△	10m△	Red	CA	NR	750m	30m	28	2.8	10m	700n		E104zz	PY373a☑
98	739-0361-602	.60	3	300u△	10m△	Red	CA	NPR	750m	30m	28	2.8	10m	700n		E104zz	PY373h☑
99	LTC612B1P	.60	4			Red	OTHR	NK								E304r	PY1403
100	LTC617A1	.60	4			Red	OTHR	NK								E294f	PY1405
101	LTC656T1	.60	4*			Red	CC	NK								E344k	PY1407
102	LTC656T1G	.60	4			Green	CC	NK								E344k	PY1407
103	LTC656T1P	.60	4			Red	CC	NK								E344k	PY1407
104	LTC667A1	.60	4			Red	CC	NK								E344n	PY1411
105	LTC674B1G	.60	4			Green	CA	NK								E354f	PY1409
106	LTC677A1	.60	4			Red	CC	NK								E344n	PY1410
107	LTC697A1	.60	4			Red	CA	NK								E304t	PY1412
108	TLG2198	.60	4	80u	10m	Green		N		30m	26	2.7	20m	565n	12 hr Com A	None ♦	PY673
109	TLG2229	.60	4	.08m	10m	Green		NC		15m	26	2.5	10m	565n	CK/Freq Dis	None	PY770
110	TLG2231	.60	4	80u	50m	Green		N		60m	26	2.3	50m	565n	12 hr Com A	None ♦	PY673

SYMBOLS AND CODES EXPLAINED IN INTERPRETER

35. LED CHARACTER DISPLAYS - Seven-Segment Numeric (Cont'd)

IN ORDER OF FONT AND: (1) CHAR. HEIGHT (2)NO. CHAR. (3) INTENSITY & (4) TYPE NO.

LINE No.	4 TYPE NUMBER	1 CHAR. HGHT (in)	2 NO. CHAR	3 LUMINOUS INTENSITY Iv MIN (cd)	IF TEST (A)	COLOR	CONN.	DISP NOMEN	PD RATED MAX (W)	IF RATED MAX (A)	TEMP RNGE CODE - +	FORWARD VOLTAGE VF MAX (V)	IF TEST (A)	PEAK WAVE-LENGTH λP (m)	FEATURES	DRAWINGS SCHE-MATIC	OUTLINE
1	TLG2259	.60	4	80u	10m	Green		N		15m	26	2.5	10m	565n	12 hr Com A	None ♦	PY673
2	TLG2268	.60	4	80u	10m	Green		N		30m	26	2.7	20m	565n	12 hr Com K	None ♦	PY673
3	TLG2281	.60	4	80u	50m	Green		N		60m	26	2.3	50m	565n	12 hr Com A	None ♦	PY673
4	TLG4192	.60	4	80u	10m	Green		N		30m	26	2.7	20m	565n	24 hr Com A	None ♦	PY673
5	TLG4224	.60	4	.08m	10m	Green		NC		15m	26	2.5	10m	565n	CK/Freq Dis	None	PY770
6	TLG4236	.60	4	80u	50m	Green		N		60m	26	2.3	50m	565n	24 hr Com A	None ♦	PY673
7	TLG4254	.60	4	80u	10m	Green		N		15m	26	2.5	10m	565n	24 hr Com A	None ♦	PY673
8	TLG4262	.60	4	80u	10m	Green		N		30m	26	2.7	20m	565n	24 hr Com K	None ♦	PY673
9	TLG4286	.60	4	80u	50m	Green		N		60m	26	2.3	50m	565n	24 hr Com A	None ♦	PY673
10	LT707GDS	.60	4	100u	10m	Green	INT	NK	1.5		26			565n	24 Hr Modul	E214zz	PY653
11	TLR2098A	.60	4	100u	10m	Red	CA	NC			26	2.7	20m	700n	Dupl;Com A	E284b	PY676 ☑
12	TLR2168	.60	4	100u	40m	Red	OTHR	NC		15m	27%	2.4 †	40m	700n	12Hr;Com K	E244a	PY676 ☑
13	TLR2177	.60	4	100u	10m	Red	CA	NC		15m	26	2.5	10m	700n		E344o	PY675 ☑
14	TLR2198	.60	4	100u	10m	Red	CA	NC			26	2.7	20m	700n	Dupl;Com A	E304a	PY673 ☑
15	TLR2207	.60	4	100u	10m	Red	CC	NC		15m	26	2.5	10m	700n		E344m	PY675 ☑
16	TLR2218	.60	4	.10m	40m	Red		NC		60m	26	3.4	40m	700n	12Hr Dis	None	PY673
17	TLR2229	.60	4	.10m	10m	Red		NC		15m	26	2.5	10m	700n	Ck/Freq Dis	None	PY770
18	TLR2231	.60	4	100u	10m	Red		NC		15m	26	3.4	40m	700n	12 hr Com A	None ♦	PY673
19	TLR2259	.60	4	100u	10m	Red		NC		15m	26	2.5	10m	700n	12 hr Com A	None ♦	PY673
20	TLR2268	.60	4	.10m	10m	Red		NC		30m	26	2.7	20m	700n	12Hr Dis	None	PY673
21	TLR2281	.60	4	100u	10m	Red		NC		15m	26	3.4	40m	700n	24 hr Com K	None ♦	PY673
22	TLR4093A	.60	4	100u	10m	Red	CA	NC			26	2.7	20m	700n	Dupl;Com A	E284b	PY676 ☑
23	TLR4163	.60	4	100u	40m	Red	CA	NC		15m	27%	2.4 †	40m	700n	24Hr;Com K	E294a	PY676 ☑
24	TLR4172	.60	4	100u	10m	Red	CC	NC		15m	26	2.5	10m	700n		E344n	PY675 ☑
25	TLR4192	.60	4	100u	10m	Red	CA	NC			26	2.7	20m	700n	Dupl;Com A	E304a	PY673 ☑
26	TLR4202	.60	4	100u	10m	Red	CC	NC		15m	26	2.5	10m	700n		E344k	PY675 ☑
27	TLR4213	.60	4	.10m	40m	Red		NC		60m	26	3.4	40m	700n	24Hr Dis	None	PY673
28	TLR4224	.60	4	.10m	10m	Red		NC		15m	26	2.5	10m	700n	Ck/Freq Dis	None	PY770
29	TLR4236	.60	4	100u	10m	Red		NC		15m	26	3.4	40m	700n	24 hr Com A	None ♦	PY673
30	TLR4254	.60	4	100u	10m	Red		NC		15m	26	2.5	10m	700n	24 hr Com A	None ♦	PY673
31	TLR4262	.60	4	.10m	10m	Red		NC		30m	26	2.7	20m	700n	24Hr Dis	None	PY673
32	TLR4286	.60	4	100u	10m	Red		NC		15m	26	3.4	40m	700n	24 hr 6mK	None ♦	PY673
33	LTC612A1P	.60	4	140u	10m	Red	OTHR	NR	2.4	30m	26	2.8	20m	697n		E304r	PY1403
34	LTC612D1P	.60	4	140u	10m	Red	OTHR	NR	2.4	30m	26	2.8	20m	697n		E304r	PY1403a
35	LTC617A1P	.60	4	140u	10m	Red	OTHR	NR	2.4	30m	26	2.8	20m	697n		E294f	PY1405a
36	LTC617D1P	.60	4	140u	10m	Red	OTHR	NR	2.4	30m	26	2.8	20m	697n		E294f	PY1405
37	LTC627A1P	.60	4	140u	10m	Red		NR	2.4	30m	26	2.8	20m	697n		E294g	PY1408a
38	LTC627D1P	.60	4	140u	10m	Red		NR	2.4	30m	26	2.8	20m	697n		E294g	PY1408
39	LTC637A1P	.60	4	140u	10m	Red		NR	2.4	30m	26	2.8	20m	697n		E294h	PY1390
40	LTC637A1P12	.60	4	140u	10m	Red		NR	2.4	30m	26	2.8	20m	697n		E294h	PY1390
41	LTC637C1P	.60	4	140u	10m	Red		NR	2.4	30m	26	2.8	20m	697n		E294h	PY1390a
42	LTC637C1P12	.60	4	140u	10m	Red		NR	2.4	30m	26	2.8	20m	697n		E294h	PY1390a
43	LTC637D1P12	.60	4	140u	10m	Red		NR	2.4	30m	26	2.8	20m	697n		E294h	PY1390a
44	LTC656TP	.60	4	140u	10m	Red		NR	2.4	30m	26	2.8	20m	697n		E344w	PY1407
45	LTC667A1P	.60	4	140u	10m	Red	CC	NR	2.4	30m	26	2.8	20m	697n		E354a	PY1596a
46	LTC667A1P12	.60	4	140u	10m	Red	CC	NR	2.4	30m	26	2.8	20m	697n		E354a	PY1596a
47	LTC667C1P	.60	4	140u	10m	Red	CC	NR	2.4	30m	26	2.8	20m	697n		E354a	PY1596a
48	LTC667C1P12	.60	4	140u	10m	Red	CC	NR	2.4	30m	26	2.8	20m	697n		E354a	PY1596a
49	LTC667D1P	.60	4	140u	10m	Red	CC	NR	2.4	30m	26	2.8	20m	697n		E354a	PY1596
50	LTC667D1P12	.60	4	140u	10m	Red	CC	NR	2.4	30m	26	2.8	20m	697n		E354a	PY1596
51	LTC677A1P	.60	4	140u	10m	Red	CC	NR	2.4	30m	26	2.8	20m	697n		E344k	PY1598
52	LTC677D1P	.60	4	140u	10m	Red	CC	NR	2.4	30m	26	2.8	20m	697n		E344k	PY1598a
53	LTC687A1P	.60	4	140u	10m	Red		NR	2.4	30m	26	2.8	20m	697n		E284m	PY1600
54	LTC687S1P	.60	4	140u	10m	Red		NR	2.4	30m	26	2.8	20m	697n		E284l	PY1600
55	LTC697A1P	.60	4	140u	10m	Red		NR	2.4	30m	26	2.8	20m	697n		E304y	PY1599a
56	LTC697A1P12	.60	4	140u	10m	Red		NR	2.4	30m	26	2.8	20m	697n		E304y	PY1599a
57	LTC697C1P	.60	4	140u	10m	Red		NR	2.4	30m	26	2.8	20m	697n		E304y	PY1600a
58	LTC697C1P12	.60	4	140u	10m	Red		NR	2.4	30m	26	2.8	20m	697n		E304y	PY1600a
59	LTC697D1P	.60	4	140u	10m	Red		NR	2.4	30m	26	2.8	20m	697n		E304y	PY1599
60	LTC697D1P12	.60	4	140u	10m	Red		NR	2.4	30m	26	2.8	20m	697n		E304y	PY1599
61	LTC6703A1P	.60	4	140u	10m	Red		NR	2.4	30m	26	2.8	20m	697n		E304x	PY1403
62	LTC6703D1P	.60	4	140u	10m	Red		NR	2.4	30m	26	2.8	20m	697n		E304x	PY1403a
63	TLG2168	.60	4	160u	50m	Green	OTHR	NC		15m	27%	2.4 †	50m	565n	12Hr;Com K	E244a	PY676 ☑
64	TLG2218	.60	4	.16m	50m	Green		NC		60m	26	3.3	50m	565n	12HrDis	None	PY673
65	TLG4163	.60	4	160u	50m	Green	CA	NC		15m	27%	2.4 †	50m	565n	24Hr;Com K	E294a	PY676 ☑
66	TLG4213	.60	4	.16m	50m	Green		NC		60m	26	3.3	50m	565n	24Hr Dis	None	PY673
67	LT698PG12	.60	4	200u	10m	Green	CA	AC	2.4	30m	26	3.0	10m	550n	AM/PM,Alarm	E284b	PY596g△
68	LT698PG24	.60	4	200u	10m	Green	CA	NC	2.4	30m	26	3.0	10m	550n	W/Alarm	E284b	PY596g△
69	MS463MC	.60	4	200u	10m	Red	UNIV	NKC	300m	20m	27	1.7 †	10m	660n	Multiplex	E154e	PY503
70	TLR2248	.60	4	.2m△	10m△	Red	CC	NKC		30m	26	2.8	20m	700n		E284i	PY770
71	TLR3010	.60	4	.2m△	10m△	Red	CA	NEKC		30m	26	2.8	20m	700n		E354e	PY1210
72	TLR3010WG	.60	4	.2m△	10m△	Red	CA	NEKC		30m	26	2.8	20m	700n		E354e	PY1210
73	TLR4243	.60	4	200u	10m	Red		NC		30m	26	2.5	10m	700n	Dupl:Comk	None	PY675
74	LTC637A1G	.60	4	245u	10m	Green		NR	2.4	30m	26	2.8	20m	565n		E294h	PY1390
75	LTC637C1G	.60	4	245u	10m	Green		NR	2.4	30m	26	2.8	20m	565n		E294h	PY1390a
76	LTC637D1G	.60	4	245u	10m	Green		NR	2.4	30m	26	2.8	20m	565n		E294h	PY1390a
77	LTC656TG	.60	4	245u	10m	Green		NR	2.4	30m	26	2.8	20m	565n		E344w	PY1407
78	LTC667A1G	.60	4	245u	10m	Green	CC	NR	2.4	30m	26	2.8	20m	565n		E354a	PY1596a
79	LTC667D1G	.60	4	245u	10m	Green	CC	NR	2.4	30m	26	2.8	20m	565n		E354a	PY1596
80	LTC672A1G	.60	4	245u	10m	Green	CA	NR	2.4	30m	26	2.8	20m	565n		E364d	PY1408
81	LTC672D1G	.60	4	245u	10m	Green	CA	NR	2.4	30m	26	2.8	20m	565n		E364d	PY1408b
82	LTC672D1G12	.60	4	245u	10m	Green	CA	NR	2.4	30m	26	2.8	20m	565n		E364d	PY1408b
83	LTC674A1G	.60	4	245u	10m	Green		NR	2.4	30m	26	2.8	20m	565n		E344x	PY1597
84	LTC674D1G	.60	4	245u	10m	Green		NR	2.4	30m	26	2.8	20m	565n		E344x	PY1597a
85	LTC674D1G12	.60	4	245u	10m	Green		NR	2.4	30m	26	2.8	20m	565n		E344x	PY1597
86	LTC697A1G	.60	4	245u	10m	Green		NR	2.4	30m	26	2.8	20m	565n		E304y	PY1599a
87	LTC697D1G	.60	4	245u	10m	Green		NR	2.4	30m	26	2.8	20m	565n		E304y	PY1599
88	DM6015	.60	4	250u	10m△	Red	CA	NP	560m	20m	27	3.0	10m	630n		E154h	None
89	DM6016	.60	4	250u	10m△	Red	CC	NP	560m	20m	27	3.0	10m	630n		E154i	None
90	DM6021	.60	4	250u	10m△	Red	CA	NB	560m	20m	27	3.0	10m	630n		E154j	None
91	DM6022	.60	4	250u	10m△	Red	CC	NB	560m	20m	27	3.0	10m	630n		E154k	None
92	739-0461-601	.60	4	300u△	10m△	Red	CA	NR	750m	30m	28	2.8	10m	700n		E104zz	PY373b☑
93	739-0461-602	.60	4	300u△	10m△	Red	CA	NPR	750m	30m	28	2.8	10m	700n		E104zz	PY373h☑
94	LT612AG	.60	4	300u	10m	Green	CA	NKC	2.4	20m	26	2.5	10m	565n		E294b	PY596p△
95	LT687B24	.60	4	300u	10m	Red	CA	NC	2.0	20m	26	2.2	10m	680n		E284b	PY780
96	LT699-12	.60	4	300u	10m	Red	CA	AC	2.0	20m	26	2.2	10m	655n	AM/PM,Ind	E184c	PY596h△
97	LT699-24	.60	4	300u	10m	Red	CA	NC	2.0	20m	26	2.2	10m	655n	Alarm	E184c	PY596h△
98	MS465A12	.60	4	300u	20m			NC	300m	20m	28	2.1	20m	660n	12 Hr ComA	None ♦	PY854
99	MS465A24	.60	4	300u	20m			NC	300m	20m	28	2.1	20m	660n	24 Hr ComA	None ♦	PY854
100	MS465C12	.60	4	300u	20m			NC	300m	20m	28	2.1	20m	660n	12 Hr ComK	None ♦	PY854
101	MS465C24	.60	4	300u	20m			NC	300m	20m	28	2.1	20m	660n	24 Hr ComK	None ♦	PY854
102	MS466DA12	.60	4	300u	20m			NC	300m	20m	28	2.1	20m	660n	24 Hr ComA	None ♦	PY854
103	MS466DA24	.60	4	300u	20m			NC	300m	20m	28	2.1	20m	660n	Full ComA	None ♦	PY854
104	MS466DA	.60	4	300u	20m			NC	300m	20m	28	2.1	20m	660n	12 Hr ComA	None ♦	PY854
105	MS466DC12	.60	4	300u	20m			NC	300m	20m	28	2.1	20m	660n	24 HR ComK	None ♦	PY854
106	MS466DC24	.60	4	300u	20m			NC	300m	20m	28	2.1	20m	660n	Full ComK	None ♦	PY854
107	MS466DC	.60	4	300u	20m			NC	300m	20m	28	2.1	20m	660n	12 Hr ComK	None ♦	PY854
108	MS467DA12	.60	4	300u	20m	Red	CA	NKC	300m	20m	28	2.1	20m	660n		E304i	PY916
109	MS467DA24	.60	4	300u	20m	Red	CA	NKC	300m	20m	28	2.1	20m	660n		E304i	PY916
110	MS467DA	.60	4	300u	20m	Red	CA	NKC	300m	20m	28	2.1	20m	660n		E304i	PY916

SYMBOLS AND CODES EXPLAINED IN INTERPRETER

35. LED CHARACTER DISPLAYS - Seven-Segment Numeric (Cont'd)

IN ORDER OF FONT AND: (1) CHAR. HEIGHT (2)NO. CHAR. (3) INTENSITY & (4) TYPE NO.

LINE No.	4 TYPE NUMBER	1 CHAR. HGHT (in)	2 NO. CHAR	3 LUMINOUS INTENSITY Iv MIN (cd)	IF TEST (A)	COLOR	CONN.	DISP NOMEN	PD RATED MAX (W)	IF RATED MAX (A)	TEMP RNGE CODE	FORWARD VOLTAGE VF MAX (V)	IF TEST (A)	PEAK WAVE-LENGTH λP (m)	FEATURES	DRAWINGS SCHE-MATIC	OUTLINE
1	MS467DC12	.60	4	300u	20m	Red	CC	NKC	300m	20m	28	2.1	20m	660n		E304j	PY916
2	MS467DC24	.60	4	300u	20m	Red	CC	NKC	300m	20m	28	2.1	20m	660n		E304j	PY916
3	MS467DC	.60	4	300u	20m	Red	CC	NKC	300m	20m	28	2.1	20m	660n		E304j	PY916
4	MS468A12	.60	4	300u	20m	Red	CA	NKC	300m	20m	28	2.1	20m	660n		E344u	PY917
5	MS468A24	.60	4	300u	20m	Red	CA	NKC	300m	20m	28	2.1	20m	660n		E344u	PY917
6	MS468A	.60	4	300u	20m	Red	CA	NKC	300m	20m	28	2.1	20m	660n		E344u	PY917
7	MS468C12	.60	4	300u	20m	Red	CC	NKC	300m	20m	28	2.1	20m	660n		E344v	PY917
8	MS468C24	.60	4	300u	20m	Red	CC	NKC	300m	20m	28	2.1	20m	660n		E344v	PY917
9	MS468C	.60	4	300u	20m	Red	CC	NKC	300m	20m	28	2.1	20m	660n		E344v	PY917
10	MS468MA12	.60	4	300u	20m	Red	OTHR	NKC	300m	20m	28	2.1	20m	660n		E304k	PY918
11	MS468MA24	.60	4	300u	20m	Red	OTHR	NKC	300m	20m	28	2.1	20m	660n		E304k	PY918
12	MS468MA	.60	4	300u	20m	Red	OTHR	NKC	300m	20m	28	2.1	20m	660n		E304k	PY918
13	MS468MC12	.60	4	300u	20m	Red	CC	NKC	300m	20m	28	2.1	20m	660n		E304l	PY918
14	MS468MC24	.60	4	300u	20m	Red	CC	NKC	300m	20m	28	2.1	20m	660n		E304l	PY918
15	MS468MC	.60	4	300u	20m	Red	CC	NKC	300m	20m	28	2.1	20m	660n		E304l	PY918
16	MS469DA12	.60	4	300u	20m	Red	CA	NKC	300m	20m	28	2.1	20m	660n		E284f	PY919
17	MS469DA24	.60	4	300u	20m	Red	CA	NKC	300m	20m	28	2.1	20m	660n		E284f	PY919
18	MS469DA	.60	4	300u	20m	Red	CA	NKC	300m	20m	28	2.1	20m	660n		E284f	PY919
19	MS469DC12	.60	4	300u	20m	Red	CC	NKC	300m	20m	28	2.1	20m	660n		E284g	PY919
20	MS469DC24	.60	4	300u	20m	Red	CC	NKC	300m	20m	28	2.1	20m	660n		E284g	PY919
21	MS469DC	.60	4	300u	20m	Red	CC	NKC	300m	20m	28	2.1	20m	660n		E284g	PY919
22	TLG2098A	.60	4	.3mΔ	10mΔ	Green	CA	NKC		30m	26	2.8	20m	565n		E284h	PY770
23	TLG3010	.60	4	.3mΔ	10mΔ	Green	CA	NEKC		30m	26	2.8	20m	565n		E354e	PY1210
24	TLG4093A	.60	4	300u	10m	Green	OTHR	NC		30m	26	2.5	10m	565n		E374c	PY675
25	TLG4172	.60	4	300u	10m	Green	CC	NC		15m	26	2.5	10m	565n	ComAnn	E344n	PY675
26	TLG4202	.60	4	300u	10m	Green	CC	NC		15m	26	2.5	10m	565n	ComKa	E344k	PY675
27	TLG4243	.60	4	.3mΔ	10mΔ	Red	CC	NKC		30m	26	2.8	20m	565n		E284i	PY770
28	TLG4243A	.60	4	300u	10m	Green		NC		30m	26	2.5	10m	565n		None	PY675
29	MS461A	.60	4	350u	10m	Red	CC	NKC	300m		27	2.0	10m	700n		E344n	PY1070
30	MS461C	.60	4	350u	10m	Red	CC	NKC	300m		27	2.0	10m	700n	Com Ca	E344k	PY1070
31	MS465A	.60	4	350u	10m	Red	CC	NKC	300m		27	2.0	10m	700n		E344n	PY917
32	MS465C	.60	4	350u	10m	Red	CC	NKC	300m		27	2.0	10m	700n	Com Ca	E344k	PY917
33	MS461A12	.60	4	400u	10m	Red		NKC	300m	20m	27	1.7 †	10m	660n		None ♦	None
34	MS461A24	.60	4	400u	10m	Red		NKC	300m	20m	27	1.7 †	10m	660n		None ♦	None
35	MS461C12	.60	4	400u	10m	Red		NKC	300m	20m	27	1.7 †	10m	660n	ComKa	None ♦	None
36	MS461C24	.60	4	400u	10m	Red		NKC	300m	20m	27	1.7 †	10m	660n	ComKa	None ♦	None
37	ADD6401	.60	4	600u	20m	Red	OTHR	NRK					20m	680n		E204j	PY1116
38	739-0561-601	.60	5	300uΔ	10mΔ	Red	CA	NR	750m	30m	28	2.8	10m	700n		E104zz	PY373c☑
39	739-0561-602	.60	5	300uΔ	10mΔ	Red	CA	NPR	750m	30m	28	2.8	10m	700n		E104zz	PY373h☑
40	739-0661-601	.60	6	300uΔ	10mΔ	Red	CA	NR	750m	30m	28	2.8	10m	700n		E104zz	PY373d☑
41	739-0661-602	.60	6	300uΔ	10mΔ	Red	CA	NPR	750m	30m	28	2.8	10m	700n		E104zz	PY373h☑
42	739-0761-601	.60	7	300uΔ	10mΔ	Red	CA	NR	750m	30m	28	2.8	10m	700n		E104zz	PY373e☑
43	739-0761-602	.60	7	300uΔ	10mΔ	Red	CA	NPR	750m	30m	28	2.8	10m	700n		E104zz	PY373h☑
44	E10416A	.60	8	250u	10mΔ	Red	CC	NR	1.1k	20m	27	3.0	10m	630n		E168a	PY769
45	739-0861-601	.60	8	300uΔ	10mΔ	Red	CA	NR	750m	30m	28	2.8	10m	700n		E104zz	PY373f☑
46	739-0861-602	.60	8	300uΔ	10mΔ	Red	CA	NPR	750m	30m	28	2.8	10m	700n		E104zz	PY373h☑
47	739-0961-601	.60	9	300uΔ	10mΔ	Red	CA	NR	750m	30m	28	2.8	10m	700n		E104zz	PY373g☑
48	739-0961-602	.60	9	300uΔ	10mΔ	Red	CA	NPR	750m	30m	28	2.8	10m	700n		E104zz	PY373h☑
49	739-1061-601	.60	10	300uΔ	10mΔ	Red	CA	NR	750m	30m	28	2.8	10m	700n		E104zz	PY373h☑
50	739-1061-602	.60	10	300uΔ	10mΔ	Red	CA	NPR	750m	30m	28	2.8	10m	700n		E104zz	PY373h☑
51	LT1820P	.63	.5	1.3mΔ	20m	Red	UNIV	PV	400m	160m	28	2.8	20m	697n	(+/-1);ComAn	E141bi	PY599 ☑
52	GL8R06	.63	1	60u	20m	Red	CC	NR	400m	25m	27	2.0	20m	655n		E141an	PY64k
53	A6311-11	.63	1	250u	10m	Red		NL								E141ae	PY64k
54	C6311-11	.63	1	250u	10m	Red		NL								E141af	PY64k
55	A6331-11	.63	1	400u	10m	Yellow		NL								E141ae	PY64k
56	C6331-11	.63	1	400u	10m	Yellow		NL								E141af	PY64k
57	MD747	.63	1	400u	10m	Red		NL	300m	20m	28	1.7 †	10m	660n		EA135	PY444 ☑
58	A6321-11	.63	1	450u	10m	Green		NL								E141ae	PY64k
59	C6321-11	.63	1	450u	10m	Green		NL								E141af	PY64k
60	A6311-21	.63	1	500u	10m	Red		NR								E141ae	PY64k
61	A6311-23	.63	1	500u	10m	Red		P								E141bi	PY64k
62	C6311-21	.63	1	500u	10m	Red		NR								E141af	PY64k
63	C6311-23	.63	1	500u	10m	Red		P								E141bj	PY64k
64	A6331-21	.63	1	700u	10m	Yellow		NR								E141ae	PY64k
65	A6331-23	.63	1	700u	10m	Yellow		P								E141bi	PY64k
66	C6331-21	.63	1	700u	10m	Yellow		NR								E141af	PY64k
67	C6331-23	.63	1	700u	10m	Yellow		P								E141bj	PY64k
68	A6321-21	.63	1	750u	10m	Green		NR								E141ae	PY64k
69	A6321-23	.63	1	750u	10m	Green		P								E141bi	PY64k
70	C6321-21	.63	1	750u	10m	Green		NR								E141af	PY64k
71	C6321-23	.63	1	750u	10m	Green		P								E141bj	PY64k
72	A6341-11	.63	1	1.0m	10m	Orange		NL								E141ae	PY64k
73	A6341R11	.63	1	1.0m	10m	Red	CA	NL								E141ae	None
74	C6341-11	.63	1	1.0m	10m	Orange		NL								E141af	PY64k
75	C6341R11	.63	1	1.0m	10m	Red		NL								E141af	PY64k
76	LT1810P	.63	1	1.3mΔ	20m	Red	CC	NR	400m	160m	28	2.8	20m	697n		E141an	PY599 ☑
77	LT1825AP	.63	1	1.3m	20m	Red	CC	NV	400m	20m	28	2.8	20m	697n		E141br	None
78	A6341-21	.63	1	2.0m	10m	Orange		NR								E141ae	PY64k
79	A6341-23	.63	1	2.0m	10m	Orange		P								E141bi	PY64k
80	A6341R21	.63	1	2.0m	10m	Red		NR								E141ae	PY64k
81	A6341R23	.63	1	2.0m	10m	Red		P								E141bi	PY64k
82	C6341-21	.63	1	2.0m	10m	Orange		NR								E141af	PY64k
83	C6341-23	.63	1	2.0m	10m	Orange		P								E141bj	PY64k
84	C6341R21	.63	1	2.0m	10m	Red		NR								E141af	PY64k
85	C6341R23	.63	1	2.0m	10m	Red		P								E141bj	PY64k
86	LT1810G	.63	1	3.5mΔ	20m	Green	CC	NR	400m	160m	28	2.8	20m	565n		E141an	PY599 ☑
87	LT1811E	.63	1	4.5mΔ	20m	Orange	CA	NR	400m	160m	28	2.8	20m	635n		E141ao	PY599 ☑
88	NSN734	.70	2	100uΔ	10mΔ	Red	CA	NR		20m	27	2.0	10m	660n		E242a	PY418b☑
89	NSN781	.70	2	100uΔ	10mΔ	Red	CC	NR		20m	27	2.0	10m	660n		E242b	PY418b☑
90	NSN782	.70	2	100uΔ	10mΔ	Red	CA	NR		20m	27	2.0	10m	660n		E242c	PY418b☑
91	NSN783	.70	2	100uΔ	10mΔ	Red	CC	NR		20m	27	2.0	10m	660n		E242d	PY418b☑
92	NSN784	.70	2	100uΔ	10mΔ	Red	CA	NR		20m	27	2.0	10m	660n		E242e	PY418b☑
93	LTC737A1P	.70	4			Red	CC	NK								E304s	PY1413
94	LTC797A1	.70	4			Red	CA	NK								E304t	PY1415
95	LTC797A1P	.70	4			Red	CA	NK								E304t	PY1415
96	NSB7382	.70	4	100uΔ	10mΔ	Red	CA	NR		20m	27	2.0	10m	660n		E154b	PY419b☑
97	NSB7881	.70	4	100uΔ	10mΔ	Red	CC	NR		20m	27	2.0	10m	660n		E154c	PY419b☑
98	NSB7882	.70	4	100uΔ	10mΔ	Red	CA	NR		20m	27	2.0	10m	660n		E154d	PY419b☑
99	LTC737A1P24	.70	4	120u	10m	Red	CC	NR	2.4	30m	26	2.8	20m	697n		E304s	PY1415
100	LTC767A1P	.70	4	120u	10m	Red	CC	NK	2.4	30m	26	2.8	20m	697n		E344s	PY1414
101	TLR2349	.70	4	.2mΔ	10mΔ	Red	CC	NKC		15m	26	2.5	10m	700n		E354d	PY1209
102	TLR4344	.70	4	.2mΔ	10mΔ	Red	CC	NKC		15m	26	2.5	10m	700n		E354d	PY1209
103	MS477DA12	.70	4	300u	20m	Red	CA	NKC	300m	20m	28	2.1	20m	660n		E304i	PY920
104	MS477DA24	.70	4	300u	20m	Red	CA	NKC	300m	20m	28	2.1	20m	660n		E304i	PY920
105	MS477DA	.70	4	300u	20m	Red	CA	NKC	300m	20m	28	2.1	20m	660n		E304i	PY920
106	MS477DC12	.70	4	300u	20m	Red	CC	NKC	300m	20m	28	2.1	20m	660n		E304j	PY920
107	MS477DC24	.70	4	300u	20m	Red	CC	NKC	300m	20m	28	2.1	20m	660n		E304j	PY920
108	MS477DC	.70	4	300u	20m	Red	CC	NKC	300m	20m	28	2.1	20m	660n		E304j	PY920
109	TLG2399	.70	4	.3mΔ	10mΔ	Green	CA	NKC		30m	26	2.8	20m	565n		E324a	PY1209
110	TLG4393	.70	4	.3mΔ	10mΔ	Green	CA	NKC		30m	26	2.8	20m	565n		E324a	PY1209

SYMBOLS AND CODES EXPLAINED IN INTERPRETER

35. LED CHARACTER DISPLAYS - Seven-Segment Numeric (Cont'd)

IN ORDER OF FONT AND: (1) CHAR. HEIGHT (2)NO. CHAR. (3) INTENSITY & (4) TYPE NO.

LINE No.	4 TYPE NUMBER	1 CHAR. HGHT (in)	2 NO. CHAR	3 LUMINOUS INTENSITY Iv MIN (cd)	IF TEST (A)	COLOR	CONN.	DISP NOMEN	PD RATED MAX (W)	IF RATED MAX (A)	TEMP RNGE CODE	FORWARD VOLTAGE VF MAX (V)	IF TEST (A)	PEAK WAVE-LENGTH λP (m)	FEATURES	DRAWINGS SCHE-MATIC	OUTLINE
1	TLR2369	.70	4	.3mΔ	10mΔ	Red	CC	NKC		30m	26	2.8	20m	700n		E324b	PY1209
2	TLR2399	.70	4	.3mΔ	10mΔ	Red	CA	NKC		30m	26	2.8	20m	700n		E324a	PY1209
3	TLR4369	.70	4	.3mΔ	10mΔ	Red	CA	NKC		30m	26	2.8	20m	700n		E324a	PY1209
4	TLR4393	.70	4	.3mΔ	10mΔ	Red	CA	NKC		30m	26	2.8	20m	700n		E324a	PY1209
5	SL1051T	.71	4	280u	10m	Red		NKC	1.1	30m	26	1.9 †	5.0m	700n		None	PY1526
6	SL1052T	.71	4	280u	10m	Red		NKC	1.1	30m	26	1.9 †	5.0m	700n		None	PY1526
7	SL1072T	.71	4	300u	10m	Red		NKC	1.1	30m	26	1.9 †	5.0m	700n		None	PY1525
8	SL1722T	.71	6	200u	10m	Red		NEKC	2.1	15m	26	1.9 †	5.0m	700n		None	PY1523
9	SL5722T	.71	6	250u	20m			NEKC	2.5	30m	26	2.0 †	15m	565n		None	PY1523
10	HDSP3406	.74	.5	900uΔ	20m	Red	CA	PV	100m	50m	48	2.0	20m	655n		E181o	PY473b⊠
11	730-6023	.77	6			Red		FH	356m		07	2.2	27m			None	PY564 ⊠
12	730-6025	.77	6			Red	OTHR	FH	810m		07	5.0 ♦	27m		W/Resistors	E071zy	PY565 ⊠
13	HDSP3906	.79	.5	2.2mΔ		Red	CA	NB	105mΔ	40m	48	3.5	100m	635n	Multiplex	E181o	PY261a
14	HDSP4206	.79	.5	2.2mΔ		Yellow	CA	NB	105mΔ	40m	48	3.5	100m	583n	Multiplex	E181o	PY261a
15	HDSP8600	.79	1	1.5m	10m	Green	CA	NC	105mΔ	30m	48	2.5	10m	566n		E181j	PY261a
16	HDSP3900	.79	1	2.2mΔ		Red	CA	NB	105mΔ	40m	48	3.5	100m	635n	Multiplex	E181j	PY261a
17	HDSP3901	.79	1	2.2mΔ		Red	CC	NB	105mΔ	40m	48	3.5	100m	635n	Multiplex	E181k	PY261a
18	HDSP3903	.79	1	2.2mΔ		Red	CC	NB	105mΔ	40m	48	3.5	100m	635n	Multiplex	E181m	PY261a
19	HDSP3905	.79	1	2.2mΔ		Red	CC	NB	105mΔ	40m	48	3.5	100m	635n	Multiplex	E181n	PY261a
20	HDSP4200	.79	1	2.2mΔ		Yellow	CA	NB	105mΔ	40m	48	3.5	100m	583n	Multiplex	E181j	PY261a
21	HDSP4201	.79	1	2.2mΔ		Yellow	CC	NB	105mΔ	40m	48	3.5	100m	583n	Multiplex	E181k	PY261a
22	HDSP4203	.79	1	2.2mΔ		Yellow	CC	NB	105mΔ	40m	48	3.5	100m	583n	Multiplex	E181m	PY261a
23	HDSP4205	.79	1	2.2mΔ		Yellow	CC	NB	105mΔ	40m	48	3.5	100m	583n	Multiplex	E181n	PY261a
24	MAN8930	.80	.5	320n	10m	Red	CA	NV	450m	180m	48	2.5	20m	635n		E181q	PY521
25	LTS3406LR	.80	.5	200u	10m	Red	CA	NVB	55m	25m	28	2.0	20m	655n	Univ(+/-1)	E181o	PY1376
26	LTS3406LP	.80	.5	300u	10m	Red	CA	NVB	40m	15m	28	2.8	20m	697n	Univ(+/-1)	E181o	PY1376
27	S8011-11	.80	.5	300u	10m	Red	CA	PR							Univ +/-1	E181o	PY261a
28	S8031-11	.80	.5	400u	10m	Yellow	CA	PR							Univ +/-1	E181o	PY261a
29	S8021-11	.80	.5	450u	10m	Green	CA	PR							Univ +/-1	E181o	PY261a
30	LTS3406LY	.80	.5	750u	10m	Yellow	CA	NVB	60m	20m	28	2.8	20m	585n	Univ(+/-1)	E181o	PY1376
31	LTS3406AR	.80	.5	800u	20m	Red	CA	NVR								E181o	PY1376
32	LTS3406LE	.80	.5	900u	10m	Orange	CA	NVB	75m	25m	28	2.8	20m	630n	Univ(+/-1)	E181o	PY1376
33	LTS3406LG	.80	.5	900u	10m	Green	CA	NVB	75m	25m	28	2.8	20m	565n	Univ(+/-1)	E181o	PY1376
34	MAN8630	.80	.5	1.0m	10m	Red	CA	PRVE	650m	240m	48	2.5	20m	630n		E181q	PY521 ⊠
35	LTS3406AP	.80	.5	1.1m	20m	Red	CA	NVR								E181o	PY1376
36	S8041-11	.80	.5	1.2m	10m	Orange	CA	PR							Univ +/-1	E181o	PY261a
37	S8041R11	.80	.5	1.2m	10m	Red	CA	PR							Univ +/-1	E181o	PY261a
38	HDSP8606	.80	.5	1.5m		Green	CA	NV	105mΔ	30m	48	2.5	10m	566n		E181o	PY261a
39	LTS3406AY	.80	.5	2.5m	20m	Yellow	CA	NVR								E181o	PY1376
40	LT3406G	.80	.5	3.5mΔ	20m	Green	CA	PVR	300m	100m	28	2.8	20m	565n	(+/-1.8.);CA	E181o	PY473b
41	LTS3406AE	.80	.5	3.6m	20m	Orange	CA	NVR								E181o	PY1376
42	LTS3406AG	.80	.5	4.0m	20m	Green	CA	NVR								E181o	PY1376
43	MAN8910	.80	1	320n	10m	Red	CC	NR	600m	240m	48	2.5	20m	635n		E181r	PY522
44	MAN8940	.80	1	320n	10m	Red	CC	NR	600m	240m	48	2.5	20m	635n		E181r	PY522
45	MAN8950	.80	1	320n	10m	Red	CC	NV	450m	180m	48	2.5	20m	635n		E181s	PY521
46	LTS3401LR	.80	1	200u	10m	Red	CA	NB	55m	25m	28	2.0	20m	655n		E181x	PY1375
47	LTS3403LR	.80	1	200u	10m	Red	CC	NB	55m	25m	28	2.0	20m	655n		E181y	PY1375
48	A8011-11	.80	1	300u	10m	Red	CA	NB								E181j	PY261a
49	C8011-11	.80	1	300u	10m	Red	CC	NB								E181n	PY261a
50	LTS3401LP	.80	1	300u	10m	Red	CA	NB	40m	15m	28	2.8	20m	697n		E181x	PY1375
51	LTS3403LP	.80	1	300u	10m	Red	CC	NB	40m	15m	28	2.8	20m	697n		E181y	PY1375
52	CMN8910	.80	1	320u	10m	Red	CA	NR	600m	30m	48	2.5	20m			E181p	PY522
53	CMN8930	.80	1	320u	10m	Red	CC	NR	450m	30m	48	2.5	20m		+/-1 Overflow	E181g	PY522a
54	CMN8940	.80	1	320u	10m	Red	CC	NR	600m	30m	48	2.5	20m			E181r	PY522
55	CMN8950	.80	1	320u	10m	Red	CC	NR	450m	30m	48	2.5	20m		+/-1 Overflow	E181s	PY522a
56	A8031-11	.80	1	400u	10m	Yellow	CA	NB								E181j	PY261a
57	C8031-11	.80	1	400u	10m	Yellow	CC	NB								E181n	PY261a
58	A8021-11	.80	1	450u	10m	Green	CA	NB								E181j	PY261a
59	C8021-11	.80	1	450u	10m	Green	CC	NB								E181n	PY261a
60	MAN8810(A)	.80	1	500uΔ	10m	Yellow		NR	.6	25m	48	3.0	20m	585n		None	PY522
61	MAN8830(A)	.80	1	500uΔ	10m	Yellow		PR	450m	25m	48	3.0	20m	585n		None	PY522a
62	MAN8840(A)	.80	1	500uΔ	10m	Yellow		NR	.6	25m	48	3.0	20m	585n		None	PY522
63	MAN8850(A)	.80	1	500uΔ	10m	Yellow		PR	450m	25m	48	3.0	20m	585n		None	PY522a
64	HDSP8601	.80	1	.70m	10mΔ	Green	CC	NR	105mΔ	30m	48	2.5	10m	566n		E181k	PY261a
65	LTS3401LY	.80	1	750u	10m	Yellow	CA	NB	60m	20m	28	2.8	20m	585n		E181x	PY1375
66	LTS3403LY	.80	1	750u	10m	Yellow	CC	NB	60m	20m	28	2.8	20m	585n		E181y	PY1375
67	LAA8010	.80	1	800uΔ	10mΔ	Red	CC	NR	110m	20m	48	1.6 †	10m	655n		E181k	PY1447
68	LAA8110	.80	1	800uΔ	10mΔ	Red	CA	NL	110m	20m	48	1.6 †	10m	655n		E181j	PY1447
69	LAC8010	.80	1	800uΔ	10mΔ	Red	CC	NR	110m	20m	48	1.6 †	10m	655n		E181m	PY1447
70	LAC8110	.80	1	800uΔ	10mΔ	Red	CC	NL	110m	20m	48	1.6 †	10m	655n		E181n	PY1447
71	LTS3401AR	.80	1	800u	20m	Red	CA	NB								E181x	PY1375
72	LTS3403AR	.80	1	800u	20m	Red	CC	NB								E181y	PY1375
73	HDSP3400	.80	1	900uΔ	20m	Red	CA	NL	100m	50m	48	2.0	20m	655n		E181j	PY473 ⊠
74	HDSP3401	.80	1	900uΔ	20m	Red	CC	NR	100m	50m	48	2.0	20m	655n		E181k	PY473a⊠
75	HDSP3403	.80	1	900uΔ	20m	Red	CC	NR	100m	50m	48	2.0	20m	655n		E181m	PY473a⊠
76	HDSP3405	.80	1	900uΔ	20m	Red	CC	NL	100m	50m	48	2.0	20m	655n		E181n	PY473 ⊠
77	LTS3401LE	.80	1	900u	10m	Orange	CA	NB	75m	25m	28	2.8	20m	630n		E181x	PY1375
78	LTS3401LG	.80	1	900u	10m	Green	CA	NB	75m	25m	28	2.8	20m	565n		E181x	PY1375
79	LTS3403LE	.80	1	900u	10m	Orange	CC	NB	75m	25m	28	2.8	20m	630n		E181y	PY1375
80	LTS3403LG	.80	1	900u	10m	Green	CC	NB	75m	25m	28	2.8	20m	565n		E181y	PY1375
81	MAN8610	.80	1	1.0m	10m	Red	CA	NR	800m	240m	4A	2.5	20m	630n		E181p	PY522 ⊠
82	MAN8640	.80	1	1.0m	10m	Red	CC	NR	800m	240m	4A	2.5	20m	630n		E181r	PY522 ⊠
83	MAN8650	.80	1	1.0m	10m	Red	CC	PRVE	650m	240m	48	2.5	20m	630n		E181s	PY521 ⊠
84	LTS3401AP	.80	1	1.1m	20m	Red	CA	NB								E181x	PY1375
85	LTS3403AP	.80	1	1.1m	20m	Red	CC	NB								E181y	PY1375
86	A8041-11	.80	1	1.2m	10m	Orange	CA	NB								E181j	PY261a
87	A8041R11	.80	1	1.2m	10m	Red	CA	NB								E181j	None
88	C8041-11	.80	1	1.2m	10m	Orange	CC	NB								E181n	PY261a
89	C8041R11	.80	1	1.2m	10m	Red	CC	NB								E181n	PY261a
90	LAA8011	.80	1	1.2mΔ	10mΔ	Red	CC	NR	120m	20m	48	1.9 †	10m	695n		E181k	PY1447
91	LAA8111	.80	1	1.2mΔ	10mΔ	Red	CA	NL	120m	20m	48	1.9 †	10m	695n		E181j	PY1447
92	LAC8011	.80	1	1.2mΔ	10mΔ	Red	CC	NR	120m	20m	48	1.9 †	10m	695n		E181m	PY1447
93	LAC8111	.80	1	1.2mΔ	10mΔ	Red	CC	NL	120m	20m	48	1.9 †	10m	695n		E181n	PY1447
94	HDSP8603	.80	1	1.5m		Green	CC	NR	105mΔ	30m	48	2.5	10m	566n		E181m	PY473a
95	HDSP8605	.80	1	1.5m		Green	CC	NL	105mΔ	30m	48	2.5	10m	566n		E181m	PY261a
96	LTS3401AY	.80	1	2.5m	20m	Yellow	CA	NB								E181x	PY1375
97	LTS3403AY	.80	1	2.5m	20m	Yellow	CC	NB								E181y	PY1375
98	LAA8013	.80	1	2.8mΔ	10mΔ	Yellow	CC	NR	115m	20m	48	2.0 †	10m	585n		E181k	PY1447
99	LAA8113	.80	1	2.8mΔ	10mΔ	Yellow	CA	NL	115m	20m	48	2.0 †	10m	585n		E181j	PY1447
100	LAC8013	.80	1	2.8mΔ	10mΔ	Yellow	CC	NR	115m	20m	48	2.0 †	10m	585n		E181m	PY1447
101	LAC8113	.80	1	2.8mΔ	10mΔ	Yellow	CC	NL	115m	20m	48	2.0 †	10m	585n		E181n	PY1447
102	LAA8012	.80	1	3.0mΔ	10mΔ	Green	CC	NR	115m	20m	48	2.0 †	10m	565n		E181k	PY1447
103	LAA8112	.80	1	3.0mΔ	10mΔ	Green	CA	NL	115m	20m	48	2.0 †	10m	565n		E181j	PY1447
104	LAC8012	.80	1	3.0mΔ	10mΔ	Green	CC	NR	115m	20m	48	2.0 †	10m	565n		E181m	PY1447
105	LAC8112	.80	1	3.0mΔ	10mΔ	Green	CC	NL	115m	20m	48	2.0 †	10m	565n		E181n	PY1447
106	LAA8014	.80	1	3.5mΔ	10mΔ	Orange	CC	NR	115m	20m	48	2.0 †	10m	635n		E181k	PY1447
107	LAA8114	.80	1	3.5mΔ	10mΔ	Orange	CA	NL	115m	20m	48	2.0 †	10m	635n		E181j	PY1447
108	LAC8014	.80	1	3.5mΔ	10mΔ	Orange	CC	NR	115m	20m	48	2.0 †	10m	635n		E181m	PY1447
109	LAC8114	.80	1	3.5mΔ	10mΔ	Orange	CC	NL	115m	20m	48	2.0 †	10m	635n		E181n	PY1447
110	LTS3401AE	.80	1	3.6m	20m	Orange	CA	NB								E181x	PY1375

SYMBOLS AND CODES EXPLAINED IN INTERPRETER

35. LED CHARACTER DISPLAYS - Seven-Segment Numeric (Cont'd)

IN ORDER OF FONT AND: (1) CHAR. HEIGHT (2)NO. CHAR. (3) INTENSITY & (4) TYPE NO.

LINE No.	4 TYPE NUMBER	1 CHAR. HGHT (in)	2 NO. CHAR	3 LUMINOUS INTENSITY Iv MIN (cd)	IF TEST (A)	COLOR	CONN.	DISP NOMEN	PD RATED MAX (W)	IF RATED MAX (A)	TEMP RNGE CODE	FORWARD VOLTAGE VF MAX (V)	IF TEST (A)	PEAK WAVE-LENGTH λP (m)	FEATURES	DRAWINGS SCHE-MATIC	OUTLINE
1	LTS3403AE	.80	1	3.6m	20m	Orange	CC	NB								E181y	PY1375
2	LTS3401AG	.80	1	4.0m	20m	Green	CA	NB								E181x	PY1375
3	LTS3403AG	.80	1	4.0m	20m	Green	CC	NB								E181y	PY1375
4	LT3400E	.80	1	4.5mΔ	20m	Orange	CA	NL	400m	160m	28	2.8	20m	635n		E181j	PY261a
5	GL6P401	.80	3	200u	5.0m	Red	CC	NC		10m	26	2.5	5.0m	695		E354c	PY683a
6	LTC955A1P	.90	4			Red	CC	NK								E374h	PY1420
7	LTC975A1P	.90	4			Red	CA	NK								E374i	PY1421
8	LTC997A1P	.90	4			Red	CA	NK								E304t	PY1422
9	TLR2057A	.90	4	100u	10m	Red	OTHR	NC		15m	27%	2.5	10m	700n		E374b	PY683 ☑
10	TLR2087A	.90	4	100u	10m	Red	OTHR	NC		15m	27%	2.5	10m	700n		E374c	PY683 ☑
11	TLR4052A	.90	4	100u	10m	Red	OTHR	NC		15m	27%	2.5	10m	700n		E374b	PY683a☑
12	TLR4082A	.90	4	100u	10m	Red	OTHR	NC		15m	27%	2.5	10m	700n		E374c	PY683a☑
13	LTC917A1P	.90	4	135u	10m	Red	OTHR	NK	2.4	30m	26	2.8	20m	697n		E304u	PY1416
14	LTC927A1P	.90	4	135u	10m	Red	OTHR	NK	2.4	30m	26	2.8	20m	697n		E304v	PY1417
15	LTC937A1P	.90	4	135u	10m	Red	CC	NK	2.4	30m	26	2.8	20m	697n		E304w	PY1418
16	LTC937S1P	.90	4	135u	10m	Red	CC	NK	2.4	30m	26	2.8	20m	697n		E304w	PY1419
17	LTC937S1P12	.90	4	135u	10m	Red	CC	NR	2.4	30m	26	2.8	20m	697n		E304w	PY1419
18	TLR2187	.90	4	140u	60m	Red	OTHR	NC		15m	27%	2.4 †	60m	700n	12Hr;Com K	E284c	PY674 ☑
19	TLR4182	.90	4	140u	60m	Red	OTHR	NC		15m	27%	2.4 †	60m	700n	24Hr;Com K	E284c	PY674 ☑
20	TLR2297	.90	4	.20mΔ	10mΔ	Red	CA	NKC		45m	26	2.8	20m	700n		E304c	PY674
21	TLR2307	.90	4	.20mΔ	10mΔ	Red	CC	NKC		45m	26	2.8	20m	700n		E304p	PY674
22	TLR4152	.90	4	200u	10m	Green		NC		90m	26	2.5	10m	700n		None	PY674
23	TLR4291	.90	4	200u	10m	Red		NC		45m	26	2.5	10m	700n	Dupl:Com A	None	PY674
24	TLR4301	.90	4	200u	10m	Red		NC		45m	26	2.5	10m	700n	Dupl:Com K	None	PY674
25	TLR2157	.90	4	.25mΔ	60mΔ	Red	CA	NKC		90m	26	3.6	60m	700n		E284e	PY674
26	MS497DA24	.90	4	300u	20m	Red	CA	NKC	300m	20m	28	2.1	20m	660n		E304i	PY921
27	MS497DC12	.90	4	300u	20m	Red	CA	NKC	300m	20m	28	2.1	20m	660n		E304i	PY921
28	MS497DC24	.90	4	300u	20m	Red	CA	NKC	300m	20m	28	2.1	20m	660n		E304i	PY921
29	MS497DC	.90	4	300u	20m	Red	CA	NKC	300m	20m	28	2.1	20m	660n		E304i	PY921
30	MS498A12	.90	4	300u	20m	Red	CA	NKC	300m	20m	28	2.1	20m	660n		E374d	PY922
31	MS498A24	.90	4	300u	20m	Red	CA	NKC	300m	20m	28	2.1	20m	660n		E374d	PY922
32	MS498A	.90	4	300u	20m	Red	CA	NKC	300m	20m	28	2.1	20m	660n		E374d	PY922
33	MS498C12	.90	4	300u	20m	Red	CC	NKC	300m	20m	28	2.1	20m	660n		E374e	PY922
34	MS498C24	.90	4	300u	20m	Red	CC	NKC	300m	20m	28	2.1	20m	660n		E374e	PY922
35	MS498C	.90	4	300u	20m	Red	CC	NKC	300m	20m	28	2.1	20m	660n		E374e	PY922
36	TLG2057A	.90	4	.3mΔ	10mΔ	Green	CA	NKC		20m	26	2.5	10m	565n		E374f	PY674
37	TLG2087A	.90	4	.3mΔ	10mΔ	Green	CC	NKC		20m	26	2.5	10m	565n		E374g	PY674
38	TLG4052A	.90	4	300u	10m	Green	OTHR	NC		20m	26	2.5	10m	565n		E374b	PY674
39	TLG4082A	.90	4	300u		Green	OTHR	NC		20m	26	2.5	10m	565n	ComKa	E374c	PY674
40	SL1453P	.91	4	200u	5.0m	Red		NK	1.4	20m	26	1.9 †	5.0m	700n		None	PY1524
41	SL1454P	.91	4	200u	5.0m	Red		NK	1.4	20m	26	1.9 †	5.0m	700n		None	PY1524
42	SL1071T	.91	4	300u	10m	Red		NKC	1.1	30m	26	1.9 †	5.0m	700n		None	PY1525
43	GL4R10A	.98	1	100u	20m	Red	CA	PR	430m	25m	27	2.0	20m	655n		E141au	PY64i
44	GL8R10	1.0	1	200u	20m	Red	CC	NR	715m	25m	27	3.8	20m	655n		E141an	PY64i
45	A2611-21	1.0	1	300u	10m	Red	CC	NR								E141u	PY1218
46	A2611-23	1.0	1	300u	10m	Red		PR								E141ag	PY1218a
47	C2611-21	1.0	1	300u	10m	Red	CA	NR								E141t	PY1218
48	C2611-23	1.0	1	300u	10m	Red		PR								E141ah	PY1218a
49	A2631-21	1.0	1	400u	10m	Yellow	CC	NR								E141u	PY1218
50	A2631-23	1.0	1	400u	10m	Yellow		PR								E141ag	PY1218a
51	C2621-23	1.0	1	400u	10m	Yellow		PR								E141ah	PY1218a
52	C2631-21	1.0	1	400u	10m	Yellow	CA	NR								E141t	PY1218
53	C2631-23	1.0	1	400u	10m	Yellow		PR								E141ah	PY1218a
54	LTS1720R	1.0	1	400u	10m	Red		NR	90m	25m	28	4.0	20m	655n		E141an	PY1377
55	LTS1723R	1.0	1	400u	10m	Red		NR	90m	25m	28	4.0	20m	655n		E141ap	PY1377
56	LTS1740R	1.0	1	400u	10m	Red		NVR	90m	25m	28	4.0	20m	655n		E141ag	PY1378
57	LTS1743R	1.0	1	400u	10m	Red		NVR	90m	25m	28	4.0	20m	655n		E141ah	PY1378
58	A2621-21	1.0	1	450u	10m	Green	CC	NR								E141u	PY1218
59	A2621-23	1.0	1	450u	10m	Green		PR								E141ag	PY1218a
60	C2621-21	1.0	1	450u	10m	Green	CA	NR								E141t	PY1218
61	LTS1720P	1.0	1	650u	10m	Red		NR	65m	15m	28	5.6	20m	697n		E141an	PY1377
62	LTS1723P	1.0	1	650u	10m	Red		NR	65m	15m	28	5.6	20m	697n		E141ap	PY1377
63	LTS1740P	1.0	1	650u	10m	Red		NVR	65m	15m	28	5.6	20m	697n		E141ag	PY1378
64	LTS1743P	1.0	1	650u	10m	Red		NVR	65m	15m	28	5.6	20m	697n		E141ah	PY1378
65	LTS1720Y	1.0	1	1.4m	10m	Yellow		NR	100m	20m	28	5.6	20m	585n		E141an	PY1377
66	LTS1723Y	1.0	1	1.4m	10m	Yellow		NR	100m	20m	28	5.6	20m	585n		E141ap	PY1377
67	LTS1740Y	1.0	1	1.4m	10m	Yellow		NVR	100m	20m	28	5.6	20m	585n		E141ag	PY1378
68	LTS1743Y	1.0	1	1.4m	10m	Yellow		NVR	100m	20m	28	5.6	20m	585n		E141ah	PY1378
69	LTS1720G	1.0	1	1.6m	10m	Green		NR	120m	25m	28	5.6	20m	565n		E141an	PY1377
70	LTS1723G	1.0	1	1.6m	10m	Green		NR	120m	25m	28	5.6	20m	565n		E141ap	PY1377
71	LTS1740G	1.0	1	1.6m	10m	Green		NVR	120m	25m	28	5.6	20m	565n		E141ag	PY1378
72	LTS1743G	1.0	1	1.6m	10m	Green		NVR	120m	25m	28	5.6	20m	565n		E141ah	PY1378
73	A2641-21	1.0	1	2.0m	10m	Orange	CC	NR								E141u	PY1218
74	A2641-23	1.0	1	2.0m	10m	Orange		PR								E141ag	PY1218a
75	A2641R21	1.0	1	2.0m	10m	Red	CC	NR								E141u	PY1218
76	A2641R23	1.0	1	2.0m	10m	Red		PR								E141ag	PY1218a
77	C2641-21	1.0	1	2.0m	10m	Orange	CA	NR								E141t	PY1218
78	C2641-23	1.0	1	2.0m	10m	Orange		PR								E141ah	PY1218a
79	C2641R21	1.0	1	2.0m	10m	Red	CA	NR								E141t	PY1218
80	C2641R23	1.0	1	2.0m	10m	Red		PR								E141ah	PY1218a
81	LTS1720E	1.0	1	2.2m	10m	Orange		NR	120m	25m	28	5.6	20m	630n		E141an	PY1377
82	LTS1723E	1.0	1	2.2m	10m	Orange		NR	120m	25m	28	5.6	20m	630n		E141ap	PY1377
83	LTS1740E	1.0	1	2.2m	10m	Orange		NVR	120m	25m	28	5.6	20m	630n		E141ag	PY1378
84	LTS1743E	1.0	1	2.2m	10m	Orange		NVR	120m	25m	28	5.6	20m	630n		E141ah	PY1378
85	NAG101	1.0	1*	4.0m		Green	CA	NR	126m	25m	28	5.0	20m	555n	Black Face	E141cu	PY1218☑
86	NAG103	1.0	1*	4.0m		Green	CA	NR	126m	25m	28	5.0	20m	555n	Gray Face	E141cu	PY1218☑
87	NKG101	1.0	1*	4.0m		Green	CC	NR	126m	25m	28	5.0	20m	555n	Black Face	E141cv	PY1218☑
88	NKG103	1.0	1*	4.0m		Green	CC	NR	126m	25m	28	5.0	20m	555n	Gray Face	E141cv	PY1218☑
89	NSG101	1.0	1*	4.0m		Green	OTHR	PN	126m	25m	28	5.0	20m	555n	Black Face	E141ct	PY1378☑
90	NSG103	1.0	1*	4.0m		Green	OTHR	PN	126m	25m	28	5.0	20m	555n	Gray Face	E141ct	PY1378☑
91	NAY101	1.0	1*	6.0m		Yellow	CA	NR	126m	25m	28	5.0	20m	580n	Black Face	E141cu	PY1218☑
92	NAY103	1.0	1*	6.0m		Yellow	CA	NR	126m	25m	28	5.0	20m	580n	Grey Face	E141cu	PY1218☑
93	NKY101	1.0	1*	6.0m		Yellow	CC	NR	126m	25m	28	5.0	20m	580n	Black Face	E141cv	PY1218☑
94	NKY103	1.0	1*	6.0m		Yellow	CC	NR	126m	25m	28	5.0	20m	580n	Gray Face	E141cv	PY1218☑
95	NSY101	1.0	1*	6.0m		Yellow	OTHR	PN	126m	25m	28	5.0	20m	580n	Black Face	E141ct	PY1378☑
96	NSY103	1.0	1*	6.0m		Yellow	OTHR	PN	126m	25m	28	5.0	20m	580n	Gray Face	E141ct	PY1378☑
97	NAA101	1.0	1*	8.0m		Orange	CA	NR	126m	25m	28	5.0	20m	605n	Black Face	E141cu	PY1218☑
98	NAA103	1.0	1*	8.0m		Orange	CA	NR	126m	25m	28	5.0	20m	605n	Gray Face	E141cu	PY1218☑
99	NKA101	1.0	1*	8.0m		Orange	CC	NR	126m	25m	28	5.0	20m	605n	Black Face	E141cv	PY1218☑
100	NKA103	1.0	1*	8.0m		Orange	CC	NR	126m	25m	28	5.0	20m	605n	Gray Face	E141cv	PY1218☑
101	NSA101	1.0	1*	8.0m		Orange	OTHR	PN	126m	25m	28	5.0	20m	605n	Black Face	E141ct	PY1378☑
102	NSA103	1.0	1*	8.0m		Orange	OTHR	PN	126m	25m	28	5.0	20m	605n	Gray Face	E141ct	PY1378☑
103	NAR101	1.0	1*	10m	20m	Red	CA	NR	120m	30m	28	4.0	20m	660n	Black Face	E141cu	PY1218☑
104	NAR103	1.0	1*	10m	20m	Red	CA	NR	120m	30m	28	4.0	20m	660n	Gray Face	E141cu	PY1218☑
105	NKR101	1.0	1*	10m	20m	Red	CC	NR	120m	30m	28	4.0	20m	660n	Black Face	E141cv	PY1218☑
106	NKR103	1.0	1*	10m	20m	Red	CC	NR	120m	30m	28	4.0	20m	660n	Gray Face	E141cv	PY1218☑
107	NSR101	1.0	1*	10m	20m	Red	OTHR	PN	120m	30m	28	4.0	20m	660n	Black Face	E141ct	PY1378☑
108	NSR103	1.0	1*	10m	20m	Red	OTHR	PN	120m	30m	28	4.0	20m	660n	Gray Face	E141ct	PY1378☑
109	DM10348-04	1.0	2	350u	10mΔ	Red	CA	ND	840m	20m	25	6.0	10m	690n		E202f	None
110	DM10348-03	1.0	6	350u	10mΔ	Red		ND	840m	20m	25	6.0	10m	690n		E506a	None

SYMBOLS AND CODES EXPLAINED IN INTERPRETER

35. LED CHARACTER DISPLAYS- Seven-Segment Numeric (Cont'd)

IN ORDER OF FONT AND: (1) CHAR. HEIGHT (2)NO. CHAR. (3) INTENSITY & (4) TYPE NO.

LINE No.	4 TYPE NUMBER	1 CHAR. HGHT (in)	2 NO. CHAR	3 LUMINOUS INTENSITY Iv MIN (cd)	IF TEST (A)	COLOR	CONN.	DISP NOMEN	PD RATED MAX (W)	IF RATED MAX (A)	TEMP RNGE CODE	FORWARD VOLTAGE VF MAX (V)	IF TEST (A)	PEAK WAVE-LENGTH λP (m)	FEATURES	DRAWINGS SCHE-MATIC	OUTLINE
1	LTC14301A1P12	1.4	4	245u	10m	Red		NR	2.4	30m	26	2.8	20m	697n		E424c	PY1472
2	LTC115402A1P	1.5	4	230u	10m	Red	CC	NK	2.4	30m	26	2.8	20m	697n		E424b	PY1423
3	LTC115402A1P12	1.5	4	230u	10m	Red	CC	NR	2.4	30m	26	2.8	20m	697n		E424b	PY1423
4	TLG380	1.8	1	0.8mΔ	10mΔ	Green		NR		20m	25	5.0	10m	565n		None ♦	PY1207
5	TLR380	1.8	1	1.0mΔ	10mΔ	Red		NR		20m	26	5.0	10m	700n		None ♦	PY1207
6	TLS380	1.8	1	1.4mΔ	♦	Red		NR		20m	26	5.0	10m	635n		None	PY1207
7	LTC1867T1P	1.8	4			Red	CC	NK								E424b	PY1424
8	LTC1867TA1P12	1.8	4	270u	10m	Red	CC	NC	2.4	30m	26	2.8	20m	697n		E424b	PY1424
9	LTC18501A1P12	1.8	4	270u	10m	Red		NC	2.4	30m	26	2.8	20m	697n		E304z	PY1473
10	LTC18501A1P24	1.8	4	270u	10m	Red		NC	2.4	30m	26	2.8	20m	697n		E304z	PY1473
11	TLR2327	1.8	4	1.0mΔ	10mΔ	Red	CC	NKC		15m	26	5.0	10m	700n		E424a	PY1208
12	TLR4322	1.8	4	1.0mΔ	10mΔ	Red	CC	NKC		15m	26	5.0	10m	700n		E424a	PY1208
13	SL1066	1.85	4	1.0m	10m	Red		NRK	2.4	20m	26	3.9 †	10m	700n		None	PY1528
14	SL2066	1.85	4	1.5m	15m	Green		NRK	3.1	25m	26	4.1 †	25m	565n		None	PY1528
15	SL1086	2.52	4	2.8m	10m	Red		NRK	3.5	20m	26	5.7 †	10m	700n		None	PY1529

DISPLAY, LED SEGMENTED ALPHANUMERIC

19	MAN2815	.135	8	120u	2.5m	Red	CC	AL	640m	20m	48	2.0	20m	660n		E248a	PY469 ☑
20	HDSP6300	.14	8E	400u		Red	CC	ADK	1.0	150m	48	1.9	24m	655n	8 Char DIP	E268a	PY614a
21	HDSP6504	.15	4	1.6m	30m	Red	CC	AE	138m	200m	48	1.9	30m	655n		E224b	PY614
22	HDSP6508	.15	8	1.6m	30m	Red	CC	AE	138m	200m	48	1.9	30m	655n		E268a	PY614a
23	HDSP8716	.15	16E	1.6m	30m	Red	CC	ADK	138m†#	200m	48	1.9	30m	655n	16 Char Sys	E268a	PY614a
24	HDSP8724	.15	24E	1.6m	30m	Red	CC	ADK	138m†#	200m	48	1.9	30m	655n	24 Char Sys	E268a	PY614a
25	HDSP8732	.15	32E	1.6m	30m	Red	CC	ADK	138m†#	200m	48	1.9	30m	655n	32 Char Sys	E268a	PY614a
26	HDSP8740	.15	40E	1.6m	30m	Red	CC	ADK	138m†#	200m	48	1.9	30m	655n	40 Char Sys	E268a	PY614a
27	TLG370	.50	1	60u	10m	Green	CC	AR		15m	37	2.5	10m	565n	COMMON K	E181t	PY581
28	TLG371	.50	1	60u	10m	Green	CA	AR		15m	37	2.5	10m	565n	COMMON A1	E181u	PY581
29	LTG370	.50	1	.20mΔ	10m	Green	CC	AR		15m	37	2.5	10.m	565n	Com Ka	E181t	PY581 ☑
30	LTP537R	.50	1	200u	10m	Red	CC	AR	55m	25m	28	2.0	20m	655n	CC Multplx	E181t	PY1453
31	LTP587R	.50	1	200u	10m	Red	CA	AR	55m	25m	28	2.0	20m	655n	CA Multplx	E181u	PY1453
32	LTP537P	.50	1	250u	10m	Red	CC	AR	40m	15m	28	2.8	20m	697n	CC Multplx	E181t	PY1453
33	LTP587P	.50	1	250u	10m	Red	CA	AR	40m	15m	28	2.8	20m	697n	CA Multplx	E181u	PY1453
34	LTR370	.50	1	.25mΔ	5.0m	Red	CC	AR		15m	37	2.5	15m	700n	Com Ka	E181t	PY581 ☑
35	LTR371	.50	1	.25mΔ	5.0m	Red	CA	AR		15m	37	2.5	15m	700n		E181u	PY581 ☑
36	LTP537E	.50	1	750u	10m	Orange	CC	AR	75m	25m	28	2.8	20m	630n		E181t	PY1453
37	LTP537G	.50	1	750u	10m	Green	CC	AR	75m	25m	28	2.8	20m	565n	CC Multplx	E181t	PY1453
38	LTP537HR	.50	1	750u	10m	Red	CC	AR	75m	25m	28	2.8	20m	630n		E181t	PY1453
39	LTP587E	.50	1	750u	10m	Orange	CA	AR	75m	25m	28	2.8	20m	630n		E181u	PY1453
40	LTP587G	.50	1	750u	10m	Green	CA	AR	75m	25m	28	2.8	20m	565n	CA Multplx	E181u	PY1453
41	LTP587HR	.50	1	750u	10m	Red	CA	AR	75m	25m	28	2.8	20m	630n		E181u	PY1453
42	AND370R	.50	1	2.5m	5.0m	Red	CC	A		80	37	2.5	15m	700n		E181t	PY581 ☑
43	AND371R	.50	1	2.5m	5.0m	Red	CA	A		80	37	2.5	15m	700n		E181u	PY581 ☑
44	TLR370	.50	1	130m	5m	Red		AR		15m	37	2.5	15m	700n		None	None
45	TLR371	.50	1	130m	5m	Red		AR		15m	37	2.5	15m	700n		None	None
46	LTG371	.50	2	.20mΔ	10m	Green	CA	AR		15m	37	2.5	10.m	565n		E181u	PY581 ☑
47	C5412-21	.54	.5	300u	10m	Red	CC	AD								E182j	PY225f
48	C5432-21	.54	.5	400u	10m	Yellow	CC	AD								E182j	PY225f
49	C5422-21	.54	.5	450u	10m	Green	CC	AD								E182j	PY225f
50	C5442-21	.54	.5	1.0m	10m	Orange	CC	AD								E182j	PY225f
51	C5442R21	.54	.5	1.0m	10m	Red	CC	AD								E182j	PY225f
52	LTM8494AR	.54	2	200u	.40m	Red		A	350m		26			655n	INT/OTHR	E182aj	PY1603
53	LTP3784R	.54	2	200u	10m	Red	CC	AR	55m	25m	28	2.0	20m	655n	CC Multplx	E182i	PY1383
54	LTP3785R	.54	2	200u	10m	Red	CC	AR	55m	25m	28	2.0	20m	655n	CC Multplx	E182h	PY1383
55	LTP3784P	.54	2	250u	10m	Red	CC	AR	40m	15m	28	2.8	20m	697n	CC Multplx	E182i	PY1383
56	LTP3785P	.54	2	250u	10m	Red	CC	AR	40m	15m	28	2.8	20m	697n	CC Multplx	E182h	PY1383
57	C5412-11	.54	2	300u	10m	Red	CC	AD								E182i	PY225f
58	LTM8494AP	.54	2	300u	.40m	Red		A	350m		26			700n	INT/OTHR	E182aj	PY1603
59	C5432-11	.54	2	400u	10m	Yellow	CC	AD								E182i	PY225f
60	C5422-11	.54	2	450u	10m	Green	CC	AD								E182i	PY225f
61	LTM8494AE	.54	2	600u	.40m	Orange		A	350m		26			630n	INT/OTHR	E182aj	PY1603
62	LTM8494AG	.54	2	600u	.40m	Green		A	350m		26			565n	INT/OTHR	E182aj	PY1603
63	LTM8494AHR	.54	2	600u	.40m	Red		A	350m		26			635n	INT/OTHR	E182aj	PY1603
64	LTP3784E	.54	2	600u	10m	Orange	CC	AR	75m	25m	28	2.8	20m	630n	CC Multplx	E182i	PY1383
65	LTP3784G	.54	2	600u	10m	Green	CC	AR	75m	25m	28	2.8	20m	565n	CC Multplx	E182i	PY1593
66	LTP3785E	.54	2	600u	10m	Orange	CC	AR	75m	25m	28	2.8	20m	630n	CC Multplx	E182h	PY1383
67	LTP3785G	.54	2	600u	10m	Green	CC	AR	75m	25m	28	2.8	20m	565n	CC Multplx	E182h	PY1593
68	LAA5810	.54	2	800uΔ	10mΔ	Red		AR	110m	20m	48	1.6 †	10m	655n		E182ag	PY1446
69	LAC5810	.54	2	800uΔ	10mΔ	Red		AR	110m	20m	48	1.6 †	10m	655n		E182af	PY1446
70	C5442-11	.54	2	1.0m	10m	Orange	CC	AD								E182i	PY225f
71	C5442R11	.54	2	1.0m	10m	Red	CC	AD								E182i	PY225f
72	LAA5811	.54	2	1.3mΔ	10mΔ	Red		AR	120m	20m	48	1.9 †	10m	695n		E182ag	PY1446
73	LAC5811	.54	2	1.3mΔ	10mΔ	Red		AR	120m	20m	48	1.9 †	10m	695n		E182af	PY1446
74	LAA5813	.54	2	2.8mΔ	10mΔ	Yellow		AR	115m	20m	48	2.0 †	10m	585n		E182ag	PY1446
75	LAC5813	.54	2	2.8mΔ	10mΔ	Yellow		AR	115m	20m	48	2.0 †	10m	585n		E182af	PY1446
76	LAA5812	.54	2	3.5mΔ	10mΔ	Green		AR	115m	20m	48	2.0 †	10m	565n		E182ag	PY1446
77	LAA5814	.54	2	3.5mΔ	10mΔ	Orange		AR	115m	20m	48	2.0 †	10m	635n		E182ag	PY1446
78	LAC5812	.54	2	3.5mΔ	10mΔ	Green		AR	115m	20m	48	2.0 †	10m	565n		E182af	PY1446
79	LAC5814	.54	2	3.5mΔ	10mΔ	Orange		AR	115m	20m	48	2.0 †	10m	635n		E182af	PY1446
80	AAG101	1.0	1	0.5m	20m	Green	CA	A	60mΔ	25m	28	2.5	20m	555n	Black Face	E241a	PY1647☑
81	AAG103	1.0	1	0.5m	20m	Green	CA	A	60mΔ	25m	28	2.5	20m	555n	Gray Face	E241a	PY1647☑
82	AKG101	1.0	1	0.5m	20m	Green	CC	A	60mΔ	25m	28	2.5	20m	555n	Black Face	E241b	PY1647☑
83	AKG103	1.0	1	0.5m	20m	Green	CC	A	60mΔ	25m	28	2.5	20m	555n	Gray Face	E241b	PY1647☑
84	AAA101	1.0	1	1.0m	20m	Orange	CA	A	60mΔ	25m	28	2.5	20m	605n	Black Face	E241a	PY1647☑
85	AAA103	1.0	1	1.0m	20m	Orange	CA	A	60mΔ	25m	28	2.5	20m	605n	Gray Face	E241a	PY1647☑
86	AAY101	1.0	1	1.0m	20m	Yellow	CA	A	60mΔ	25m	28	2.5	20m	580n	Black Face	E241a	PY1647☑
87	AAY103	1.0	1	1.0m	20m	Yellow	CA	A	60mΔ	25m	28	2.5	20m	580n	Gray Face	E241a	PY1647☑
88	AKA101	1.0	1	1.0m	20m	Orange	CC	A	60mΔ	25m	28	2.5	20m	605n	Black Face	E241b	PY1647☑
89	AKA103	1.0	1	1.0m	20m	Orange	CC	A	60mΔ	25m	28	2.5	20m	605n	Gray Face	E241b	PY1647☑
90	AKY101	1.0	1	1.0m	20m	Yellow	CC	A	60mΔ	25m	28	2.5	20m	580n	Black Face	E241b	PY1647☑
91	AKY103	1.0	1	1.0m	20m	Yellow	CC	A	60mΔ	25m	28	2.5	20m	580n	Gray Face	E241b	PY1647☑
92	AAR101	1.0	1	3.0m	20m	Red	CA	A	50mΔ	25m	28	2.0	20m	660n	Black Face	E241a	PY1647☑
93	AAR103	1.0	1	3.0m	20m	Red	CA	A	50mΔ	25m	28	2.0	20m	660n	Gray Face	E241a	PY1647☑
94	AKR101	1.0	1	3.0m	20m	Red	CC	A	50mΔ	25m	28	2.0	20m	660n	Black Face	E241b	PY1647☑
95	AKR103	1.0	1	3.0m	20m	Red	CC	A	50mΔ	25m	28	2.0	20m	660n	Gray Face	E241b	PY1647☑
96	BU4274-2GA	2.0	1	1.0m	20m	Green	CA	A	200m	40m	26	5.0	40m	555n		E201a	PY1607☑
97	BU4274-2GK	2.0	1	1.0m	20m	Green	CC	A	200m	40m	26	5.0	40m	555n		E201b	PY1607☑
98	BU4274-2AA	2.0	1	2.0m	20m	Orange	CA	A	200m	40m	26	5.0	40m	605n		E201a	PY1607☑
99	BU4274-2AK	2.0	1	2.0m	20m	Orange	CC	A	200m	40m	26	5.0	40m	605n		E201b	PY1607☑
100	BU4274-2YA	2.0	1	3.5m	20m	Yellow	CA	A	200m	40m	26	5.0	40m	570n		E201a	PY1607☑
101	BU4274-2YK	2.0	1	3.5m	20m	Yellow	CC	A	200m	40m	26	5.0	40m	570n		E201b	PY1607☑
102	BU4274-2RA	2.0	1	4.0m	20m	Red	CA	A	200m	50m	26	4.0	40m	660n		E201a	PY1607☑
103	BU4274-2RK	2.0	1	4.0m	20m	Red	CC	A	200m	50m	26	4.0	40m	660n		E201b	PY1607☑

DISPLAY, LED 5x7 DOT MATRIX

107	HDSP2440	.15	.5G	200uΔ	5.0 ♦	Red	INT		.66 #Δ		05			655n	ASCII OPTS	E164zz	PY362
108	HDSP2010	.15	4	200uΔ		Red		AET	1.7		47			655n	ASCII	None	PY362
109	HDSP2010TXV	.15	4	200u		Red		G	1.3		48			655n		None	PY362
110	HDSP2010TXVB	.15	4	200u		Red		G	1.3		48			655n		None	PY362

SYMBOLS AND CODES EXPLAINED IN INTERPRETER

35. LED CHARACTER DISPLAYS - 5x7 Dot Matrix (Cont'd)

IN ORDER OF FONT AND: (1) CHAR. HEIGHT (2)NO. CHAR. (3) INTENSITY & (4) TYPE NO.

LINE No.	4 TYPE NUMBER	1 CHAR. HGHT (in)	2 NO. CHAR	3 LUMINOUS INTENSITY Iv MIN (cd)	IF TEST (A)	COLOR	CONN.	DISP NOMEN	PD RATED MAX (W)	IF RATED MAX (A)	TEMP RNGE CODE - +	FORWARD VOLTAGE VF MAX (V)	IF TEST (A)	PEAK WAVE-LENGTH λP (m)	FEATURES	DRAWINGS SCHE-MATIC	OUTLINE
1	HDSP2003	.15	4	1.6m		Green		G	1.2		28			568n		None	PY632
2	HP5082-7011	.18	.5	115u△		Red	CC	P	2.3		59⊠	5.5 ♦	350m	655n	(+/-)	E081e	PY262b⊠
3	HDSP2310	.19	4	370u		Red		G	1.5		58			655n		None	PY362a
4	HDSP2310TXV	.19	4	370u		Red		G	1.5		58			655n		None	PY362a
5	HDSP2310TXVB	.19	4	370u		Red		G	1.5		58			655n		None	PY362a
6	HDSP2311	.19	4	1.1m		Yellow		G	1.5		58			583n		None	PY362a
7	HDSP2311TXV	.19	4	1.1m		Yellow		G	1.5		58			583n		None	PY362a
8	HDSP2311TXVB	.19	4	1.1m		Red		G	1.5		58			583n		None	PY362a
9	HDSP2312	.19	4	1.4m		Red		G	1.5		58			635		None	PY362a
10	HDSP2312TXV	.19	4	1.4m		Red		G	1.5		58			635		None	PY362a
11	HDSP2312TXVB	.19	4	1.4m		Red		G	1.5		58			635n		None	PY362a
12	HDSP2450	.27	4	370n		Red		G	1.5		58			655n		None	PY855
13	HDSP2450TXV	.27	4	370u		Red		G	1.5		58			655n		None	PY855
14	HDSP2450TXVB	.27	4	370u		Red		G	1.5		58			655n		None	PY855
15	HDSP2490	.27	4	.37m△		Red		G	1.4		28			655n		None	PY855
16	HDSP2451	.27	4	1.4m		Yellow		G	1.5		58			583n		None	PY855
17	HDSP2451TXV	.27	4	1.4m		Yellow		G	1.5		58			583n		None	PY855
18	HDSP2451TXVB	.27	4	1.4m		Yellow		G	1.5		58			583n		None	PY855
19	HDSP2491	.27	4	1.4m△		Yellow		G	1.4		28			583n		None	PY855
20	HDSP2452	.27	4	1.5m		Red		G	1.5		58			635n		None	PY855
21	HDSP2492	.27	4	1.5m△		Red		G	1.4		28			635n		None	PY855
22	HP5082-7101	.27	4	2.2m	100m	Red	CC	A	700m	10m	59⊠	2.0	50m	655n		E284a	PY63a ⊠
23	HDSP2493	.27	4	2.4m△		Green		G	1.4		28			568n		None	PY855
24	5082-7101	.27	4	1.0	100m	Red	CC	A	700m#	100m	59	2.0	100m	655n		E284a	PY63
25	HP5082-7102	.27	5	2.2m	100m	Red	CC	A	700m	10m	59⊠	2.0	50m	655n		E365a	PY63b ⊠
26	5082-7102	.27	5	1.0	100m	Red	CC	A	700m#	100m	59	2.0	100m	655n		E365a	PY63
27	SLA1221	.28	1	100u	2.0m	Red		A	720m	10m	27	1.8 †	2.0m	700n		None	PY1555
28	SLA2221	.28	1	110u	5.0m	Green		A	1.2	15m	27	2.0 †	5.0m	565n		None	PY1555
29	745-0005	.30	1	110u	10m	Red	OTHR	AL	750m	400m	07	2.0	10m	650n		E141a	PY50 ⊠
30	749-1901	.30	1	110u	10m	Red	OTHR	AL	750m	400m	07	2.0	10m	650n		E141a	PY571 ⊠
31	J3511-11	.30	1	110u	10m	Red	OTHR	AL								E141a	PY50
32	J3511-21	.30	1	110u	10m	Red		AL								E141ch	PY50
33	TIL305	0.3	1	110u	10m	Red	OTHR	AL		200m	07*	2.0	10m	660n	X-Y Select & DP	E141a	PY50b ⊠
34	J3521-11	.30	1	300u	10m	Green	OTHR	AL								E141a	PY50
35	J3521-21	.30	1	300u	10m	Green		AL								E141ch	PY50
36	J3531-11	.30	1	480u	10m	Yellow	OTHR	AL								E141a	PY50
37	J3531-21	.30	1	480u	10m	Yellow		AL								E141ch	PY50
38	LTP305HR	.30	1	600u	10m	Red	OTHR	AL	1.0	20m	28	2.8	20m	635n	An Col	E141cj	PY1384a
39	J3541-11	.30	1	1.0m	10m	Orange	OTHR	AL								E141a	PY50
40	J3541-21	.30	1	1.0m	10m	Orange		AL								E141ch	PY50
41	J3541R11	.30	1	1.0m	10m	Red	OTHR	AL							Hi-Eff	E141a	PY50
42	J3541R21	.30	1	1.0m	10m	Red		AL							Hi-Eff	E141ch	PY50
43	LTP305R	.30	2	200u	10m	Red	OTHR	AL	750m	20m	28	2.0	20m	655n	An Col	E141cj	PY1384
44	LTP305G	.30	2	600u	10m	Green	OTHR	AL	1.0	20m	28	2.8	20m	565n	An Col	E141cj	PY1384
45	MAN2A	.32	1	125u	10m	Red	OTHR	AL	750m	20m	48	2.0	20m	660n		E141a	PY82a ⊠
46	DLR5735	.69	1	200u△	20m	Red	OTHR	A	750m	20m	27%	2.0	20m	650n	Common Row Cathod	E121b	PY926 ⊠
47	DLR5736	.69	1	200u△	20m	Red	OTHR	A	750m	20m	27%	2.0	20m	650n	Common Row Anode	E121c	PY926 ⊠
48	DLG5735	.69	1	650u△	10m	Green	OTHR	A	750m	20m	27%	3.0	20m	565n	Common Row Cathod	E121b	PY926 ⊠
49	DLG5736	.69	1	650u△	10m	Green	OTHR	A	750m	20m	27%	3.0	20m	565n	Common Row Anode	E121c	PY926 ⊠
50	LTP747R	.70	1	200u	10m	Red		AL	45m	20m	28	2.0	20m	655n	An Col	E121d	PY926a
51	LTP757R	.70	1	200u	10m	Red	OTHR	AL	45m	20m	28	2.0	20m	655n	Ka Col	E121c	PY926a
52	LTP747PR	.70	1	300u	10m	Red		AL	30m	12m	28	2.8	20m	697n	An Col	E121d	PY926a
53	LTP757PR	.70	1	300u	10m	Red	OTHR	AL	30m	12m	28	2.8	20m	697n	Ka Col	E121c	PY926a
54	LTP747Y	.70	1	600u	10m	Yellow		AL	50m	16m	28	2.8	20m	585n	An Col	E121d	PY926a
55	LTP757Y	.70	1	600u	10m	Yellow	OTHR	AL	50m	16m	28	2.8	20m	585n	Ka Col	E121c	PY926a
56	LTP747E	.70	1	700u	10m	Orange		AL	60m	20m	28	2.8	20m	630n	An Col	E121d	PY926a
57	LTP747G	.70	1	700u	10m	Green		AL	60m	20m	28	2.8	20m	565n	An Col	E121d	PY926a
58	LTP747HR	.70	1	700u	10m	Red		AL	60m	20m	28	2.8	20m	635n	An Col	E121d	PY926a
59	LTP757E	.70	1	700u	10m	Orange	OTHR	AL	60m	20m	28	2.8	20m	630n	Ka Col	E121c	PY926a
60	LTP757G	.70	1	700u	10m	Green	OTHR	AL	60m	20m	28	2.8	20m	565n	Ka Col	E121c	PY926a
61	LTP757HR	.70	1	700u	10m	Red	OTHR	AL	60m	20m	28	2.8	20m	635n	Ka Col	E121c	PY926a
62	LAA1010	.70	1	800u△	10m△	Red		A	110m	20m	48	1.6 †	10m	655n		E121d	PY1448
63	LAC1010	.70	1	800u△	10m△	Red	OTHR	A	110m	20m	48	1.6 †	10m	655n		E121c	PY1448
64	LAA1013	.70	1	2.5m△	10m△	Yellow		A	115m	20m	48	2.0 †	10m	585n		E121d	PY1448
65	LAC1013	.70	1	2.5m△	10m△	Yellow	OTHR	A	115m	20m	48	2.0 †	10m	585n		E121c	PY1448
66	LAA1011	.70	1	3.0m△	10m△	Red		A	120m	20m	48	1.9 †	10m	695n		E121d	PY1448
67	LAC1011	.70	1	3.0m△	10m△	Red	OTHR	A	120m	20m	48	1.9 †	10m	695n		E121c	PY1448
68	LAA1012	.70	1	3.4m△	10m△	Green		A	115m	20m	48	2.0 †	10m	565n		E121d	PY1448
69	LAC1012	.70	1	3.4m△	10m△	Green	OTHR	A	115m	20m	48	2.0 †	10m	565n		E121c	PY1448
70	LAA1014	.70	1	3.5m△	10m△	Orange		A	115m	20m	48	2.0 †	10m	635n		E121d	PY1448
71	LAC1014	.70	1	3.5m△	10m△	Orange	OTHR	A	115m	20m	48	2.0 †	10m	635n		E121c	PY1448
72	SLA1232	.71	1	550u	5.0m	Red		A	1.2	15m	27	1.9 †	5.0m	700n		None	PY1556
73	SLA2232	.71	1	1.7m	15m	Green		A	1.4	20m	27	2.0 †	15m	565n		None	PY1556
74	HDSP4501	1.02	1	1.4m△	26	Red		A	60m△	15m	48	2.5	20m	635n	-com An Row	E18lab	E181ab
75	HDSP4503	1.02	1	1.4m△	26	Red		A	60m△	15m	48	2.5	20m	635n	-com Ka Row	E18lac	E181ac
76	LAA1110	1.1	1	800u△	10m△	Red	OTHR	A	110m	20m	48	1.6 †	10m	655n		E141ck	PY1449
77	LAC1110	1.1	1	800u△	10m△	Red	OTHR	A	110m	20m	48	1.6 †	10m	655n		E141cl	PY1449
78	LAA1113	1.1	1	2.5m△	10m△	Yellow	OTHR	A	115m	20m	48	2.0 †	10m	585n		E141ck	PY1449
79	LAC1113	1.1	1	2.5m△	10m△	Yellow	OTHR	A	115m	20m	48	2.0 †	10m	585n		E141cl	PY1449
80	LAA1111	1.1	1	3.0m△	10m△	Red	OTHR	A	120m	20m	48	1.9 †	10m	695n		E141ck	PY1449
81	LAC1111	1.1	1	3.0m△	10m△	Red	OTHR	A	120m	20m	48	1.9 †	10m	695n		E141cl	PY1449
82	LAA1112	1.1	1	3.4m△	10m△	Green	OTHR	A	115m	20m	48	2.0 †	10m	565n		E141ck	PY1449
83	LAC1112	1.1	1	3.4m△	10m△	Green	OTHR	A	115m	20m	48	2.0 †	10m	565n		E141cl	PY1449
84	LAA1114	1.1	1	3.5m△	10m△	Orange	OTHR	A	115m	20m	48	2.0 †	10m	635n		E141ck	PY1449
85	LAC1114	1.1	1	3.5m△	10m△	Orange	OTHR	A	115m	20m	48	2.0 †	10m	635n		E141cl	PY1449
86	LTP1057AR	1.2	1	200u	10m	Red	OTHR	A	55m	25m	28	2.0	20m	655n	Ka Col	E141ck	PY1594
87	LTP1057AY	1.2	1	200u	10m	Yellow	OTHR	A	60m	20m	28	2.8	20m	585n	An Col	E141cl	PY1594
88	LTP1157AY	1.2	1	200u	10m	Yellow	OTHR	A	60m	20m	28	2.8	20m	585n	Ka Col	E141ck	PY1594
89	LTP1057R	1.2	1	400u	10m	Red		A								E141ck	PY1385
90	LTP1157R	1.2	1	400u	10m	Red		A								E141cl	PY1385
91	J5711-11	1.2	1	450u	10m	Red		A								E141bs	PY601
92	J5711-21	1.2	1	450u	10m	Red		A								E141ci	PY601
93	J5731-11	1.2	1	650u	10m	Yellow		A								None	PY601
94	J5731-21	1.2	1	650u	10m	Yellow		A								E141ci	PY601
95	J5721-11	1.2	1	700u	10m	Green		A								None	PY601
96	J5721-21	1.2	1	700u	10m	Green		A								E141ci	PY601
97	LTP1057AE	1.2	1	800u	10m	Orange	OTHR	A	75m	25m	28	2.8	20m	630n	An Col	E141cl	PY1594
98	LTP1057AG	1.2	1	800u	10m	Green	OTHR	A	75m	25m	28	2.8	20m	565n	Ka Col	E141cl	PY1594
99	LTP1057AHR	1.2	1	800u	10m	Red	OTHR	A	75m	25m	28	2.8	20m	635n	An Col	E141cl	PY1594
100	LTP1157AE	1.2	1	800u	10m	Orange	OTHR	A	75m	25m	28	2.8	20m	630n	Ka Col	E141ck	PY1594
101	LTP1157AG	1.2	1	800u	10m	Green	OTHR	A	75m	25m	28	2.8	20m	565n	Ka Col	E141ck	PY1594
102	LTP1157AHR	1.2	1	800u	10m	Red	OTHR	A	75m	25m	28	2.8	20m	635n	Ka Col	E141ck	PY1594
103	J5741-11	1.2	1	1.5m	10m	Orange		A								None	PY601
104	J5741-21	1.2	1	1.5m	10m	Orange		A								E141ci	PY601
105	J5741R11	1.2	1	1.5m	10m	Red		A							Hi-Eff	None	PY601
106	J5741R21	1.2	1	1.5m	10m	Red		A							Hi-Eff	E141ci	PY601
107	LTP1057Y	1.2	1	1.5m	10m	Yellow		A								E141ck	PY1385
108	LTP1157Y	1.2	1	1.5m	10m	Yellow		A								E141cl	PY1385
109	LTP1057E	1.2	1	2.0m	10m	Orange		A								E141ck	PY1385
110	LTP1057G	1.2	1	2.0m	10m	Green		A								E141ck	PY1385

SYMBOLS AND CODES EXPLAINED IN INTERPRETER

35. LED CHARACTER DISPLAYS - 5x7 Dot Matrix (Cont'd)

IN ORDER OF FONT AND: (1) CHAR. HEIGHT (2)NO. CHAR. (3) INTENSITY & (4) TYPE NO.

LINE No.	4 TYPE NUMBER	1 CHAR. HGHT (in)	2 NO. CHAR	3 LUMINOUS INTENSITY Iv MIN (cd)	IF TEST (A)	COLOR	CONN.	DISP NOMEN	PD RATED MAX (W)	IF RATED MAX (A)	TEMP RNGE CODE - +	FORWARD VOLTAGE VF MAX (V)	IF TEST (A)	PEAK WAVE-LENGTH λP (m)	FEATURES	DRAWINGS SCHE-MATIC	OUTLINE
1	LTP1057HR	1.2	1	2.0m	10m	Red		A								E141ck	PY1385
2	LTP1157E	1.2	1	2.0m	10m	Orange		A								E141cl	PY1385
3	LTP1157G	1.2	1	2.0m	10m	Green		A								E141cl	PY1385
4	LTP1157HR	1.2	1	2.0m	10m	Red		A								E141cl	PY1385
5	LAA1210	1.8	1	800u△	10m△	Red	OTHR	A	110m	20m	48	1.6 †	10m	655n		E141ck	PY1450
6	LAC1210	1.8	1	800u△	10m△	Red	OTHR	A	110m	20m	48	1.6 †	10m	655n		E141cl	PY1450
7	LAA1213	1.8	1	2.5m△	10m△	Yellow	OTHR	A	115m	20m	48	2.0 †	10m	585n		E141ck	PY1450
8	LAC1213	1.8	1	2.5m△	10m△	Yellow	OTHR	A	115m	20m	48	2.0 †	10m	585n		E141cl	PY1450
9	LAA1211	1.8	1	3.0m△	10m△	Red	OTHR	A	120m	20m	48	1.9 †	10m	695n		E141ck	PY1450
10	LAC1211	1.8	1	3.0m△	10m△	Red	OTHR	A	120m	20m	48	1.9 †	10m	695n		E141cl	PY1450
11	LAA1212	1.8	1	3.4m△	10m△	Green	OTHR	A	115m	20m	48	2.0 †	10m	565n		E141ck	PY1450
12	LAC1212	1.8	1	3.4m△	10m△	Green	OTHR	A	115m	20m	48	2.0 †	10m	565n		E141cl	PY1450
13	LAA1214	1.8	1	3.5m△	10m△	Orange	OTHR	A	115m	20m	48	2.0 †	10m	635n		E141ck	PY1450
14	LAC1214	1.8	1	3.5m△	10m△	Orange	OTHR	A	115m	20m	48	2.0 †	10m	635n		E141cl	PY1450
15	LTP2057AR	2.0	1	200u	10m	Red	OTHR	A	55m	25m	28	2.0	20m	655n	An Col	E141cl	PY601a
16	LTP2157AR	2.0	1	200u	10m	Red	OTHR	A	55m	25m	28	2.0	20m	655n	Ka Col	E141ck	PY601a
17	LTP2057R	2.0	1	400u	10m	Red		A								E141ck	PY1386
18	LTP2157R	2.0	1	400u	10m	Red		A								E141cl	PY1386
19	LTP2057AY	2.0	1	750u	10m	Yellow	OTHR	A	60m	20m	28	2.8	20m	585n	An Col	E141cl	PY601a
20	LTP2157AY	2.0	1	750u	10m	Yellow	OTHR	A	60m	20m	28	2.8	20m	585n	Ka Col	E141ck	PY601a
21	LTP2057AE	2.0	1	900u	10m	Orange	OTHR	A	75m	25m	28	2.8	20m	630n	An Col	E141cl	PY601a
22	LTP2057AHR	2.0	1	900u	10m	Red	OTHR	A	75m	25m	28	2.8	20m	635n	An Col	E141cl	PY601a
23	LTP2157AE	2.0	1	900u	10m	Orange	OTHR	A	75m	25m	28	2.8	20m	630n	Ka Col	E141ck	PY601a
24	LTP2157AHR	2.0	1	900u	10m	Red	OTHR	A	75m	25m	28	2.8	20m	635n	Ka Col	E141ck	PY601a
25	LTP2057AG	2.0	1	960u	10m	Green	OTHR	A	75m	25m	28	2.8	20m	565n	An Col	E141cl	PY601a
26	LTP2157AG	2.0	1	960u	10m	Green	OTHR	A	75m	25m	28	2.8	20m	565n	Ka Col	E141ck	PY601a
27	LTP2057Y	2.0	1	1.5m	10m	Yellow		A								E141ck	PY1386
28	LTP2157Y	2.0	1	1.5m	10m	Yellow		A								E141cl	PY1386
29	LTP2057E	2.0	1	2.0m	10m	Orange		A								E141ck	PY1386
30	LTP2057G	2.0	1	2.0m	10m	Green		A								E141ck	PY1386
31	LTP2057HR	2.0	1	2.0m	10m	Red		A								E141ck	PY1386
32	LTP2157E	2.0	1	2.0m	10m	Orange		A								E141cl	PY1386
33	LTP2157G	2.0	1	2.0m	10m	Green		A								E141cl	PY1386
34	LTP2157HR	2.0	1	2.0m	10m	Red		A								E141cl	PY1386
35	LTP2058AR	2.3	1	200u	10m	Red		85A	55m	25m	28	2.0	20m	655n	5x8 Matrix	E141cq	PY1454
36	LTP2158AR	2.3	1	200u	10m	Red		85A	55m	25m	28	2.0	20m	655n	5x8 Matrix	E141cr	PY1454
37	LTP2058AY	2.3	1	250u	10m	Yellow		85A	60m	20m	28	2.8	20m	585n	5x8 Matrix	E141cq	PY1454
38	LTP2158AY	2.3	1	250u	10m	Yellow		85A	60m	20m	28	2.8	20m	585n	5x8 Matrix	E141cr	PY1454
39	LTP2058AE	2.3	1	900u	10m	Orange		85A	75m	25m	28	2.8	20m	630n	5x8 Matrix	E141cq	PY1454
40	LTP2058AG	2.3	1	900u	10m	Green		85A	75m	25m	28	2.8	20m	565n	5x8 Matrix	E141cq	PY1454
41	LTP2058AHR	2.3	1	900u	10m	Red		85A	75m	25m	28	2.8	20m	635n	5x8 Matrix	E141cq	PY1454
42	LTP2158AE	2.3	1	900u	10m	Orange		85A	75m	25m	28	2.8	20m	630n	5x8 Matrix	E141cr	PY1454
43	LTP2158AG	2.3	1	900u	10m	Green		85A	75m	25m	28	2.8	20m	565n	5x8 Matrix	E141cr	PY1454
44	LTP2158AHR	2.3	1	900u	10m	Red		85A	75m	25m	28	2.8	20m	635n	5x8 Matrix	E141cr	PY1454

DISPLAY, LED SMART SEVEN-SEGMENT NUMERIC

48	730-6030		1			Red		HR		210m	07	5.0			With/Itch,dec,d	None ♦	PY807
49	749-2001		1	100u		Red		HR	450m	90m	07	5.0		660n	With/logic	FB90	PY572
50	745-008		1	1.3m		Red		NL	700m	160m	07	5.0		650n	With/logic	FB89	PY52
51	745-009		1	1.3m		Red		NL	1.3m	165m	07	5.0		650n	With/logic	FB88	PY52
52	932(1)	.14	32	1.5m	5.0m	Red	INT	AE	7.0	10m	29	2.0	20m	700n	w/Mem-Log	E032zz	PY409
53	745-007	.27	1	100u		Red		HR	450m	90m	07	5.0		660n	With/logic	FB90	PY28
54	TIL311	.27	1	100u	5.0 ♦	Red	OTHR	NB			08☑	5.5 ♦		660n	With Logic	FB90	PY28 ☑
55	TIL311A	.27	1	100u	5.0 ♦	Red	OTHR	NB			08☑	5.5 ♦		660n	With Logic	FB90	PY28 ☑
56	TIL306	.27	1	1.2m	5.0 ♦	Red	OTHR	NL			08☑	5.5 ♦		660n	With Logic	FB88	PY25 ☑
57	TIL306A	.27	1	1.2m	5.0 ♦	Red	OTHR	NL			08☑	5.5 ♦		660n	With Logic	FB88	PY25 ☑
58	TIL307	0.27	1	1.2m	5.0 ♦	Red	OTHR	NR			08☑	5.5 ♦		660n	With Logic	FB88	PY25 ☑
59	TIL307A	0.27	1	1.2m	5.0 ♦	Red	OTHR	NR			08☑	5.5 ♦		660n	With Logic	FB88	PY25 ☑
60	TIL308	0.27	1	1.2m	5.0 ♦	Red	OTHR	NL			08☑	5.5 ♦		660n	With Logic	FB89	PY25 ☑
61	TIL308A	0.27	1	1.2m	5.0 ♦	Red	OTHR	NL	900m	120m	08☑	5.5 ♦		660n	With Logic	FB89	PY25 ☑
62	TIL309	0.27	1	1.2m	5.0 ♦	Red	OTHR	NR			08☑	5.5 ♦		660n	With Logic	FB89	PY25 ☑
63	TIL309A	0.27	1	1.2m	5.0 ♦	Red	OTHR	NR			08☑	5.5 ♦		660n	With Logic	FB89	PY25 ☑
64	740-3006	.30	1			Red		NL	1.0	15m	07	5.0 ♦			W/Dec Dvr	None ♦	PY569c☑
65	740-3012	.30	1			Red		NL	875m	15m	07	5.0 ♦			Dec Dvr,Lat	None ♦	PY569d☑
66	740-3014	.30	1			Red		NL	875m	15m	07	5.0 ♦			Dvr,Lat,Cnt	None ♦	PY569e☑
67	749-1501	.30	1			Red		NL	1.0	15m	07	5.0 ♦	210m		W/Dec Dvr	None ♦	PY569 ☑
68	749-1601	.30	1			Red		NL	875m	15m	07	5.0 ♦	175m		Dec Dvr Lat	None ♦	PY569a☑
69	749-1701	.30	1			Red		NL	875m	15m	07	5.0 ♦	175m		Dvr,Lat,Cnt	None ♦	PY569b☑
70	NSM4307	.30	2	200u△	10m			N			27			660n	With/Logic	E002	PY1241
71	NSM4000	.30	4	200u△	10m	Red		NR			27			660n	With/Logic	E004	PY1242
72	NSM4000A	.30	4	200u		Red		NR	660m	7.0m	27	11		660n	With/logic	FB104	PS234
73	NSM4700	.30	4	200u△		Red		NR						635n	With/Logic	E004	PY1242
74	NSM4507	.50	2	200u△	10m	Red		N			27			660n	With/Logic	E002a	PY1239
75	NSM4508	.50	2	200u△	10m	Green		N			27			568n	With/Logic	E002a	PY1239
76	NSM4005A	.50	4	200u△		Red		NR						660n	With/Logic	E004a	PY1240
77	730-6002	.60	1			Red		NR	790m		07				W/Dec Dvr	None ♦	PY558b☑
78	730-6007	.60	1			Red		NR	790m		07				W/Dec Dvr	None ♦	PY558 ☑
79	730-6020	.60	1			Red		NR	875m		07				Dec Dvr,Lat	None ♦	PY558a☑
80	730-6029	.60	1			Red		NR	875m		07				Dec Dvr,Lat	None ♦	PY566 ☑
81	730-6031	.60	1	300u△	10m△	Red		NR		30m	07			700n	w/DecDvr	None ♦	PY911

DISPLAY, LED SMART SEGMENTED ALPHANUMERIC

85	IDA1414-16(A)		16	500u		Red		A	2.0 †		06	5.0 ♦	400m	660n	With/logic	FB197	PS415
86	DL1414	.11	4	0.5m		Red	INT	A	450m†	90m	26	5.0 ♦	25m	660n	Intell Sys	E124m	PY555 ☑
87	IDA1414-16-1	.110	16E	500u	5.0 ♦	Red	INT	A			26			660n	Buffered Inp	FB197	PS415 ☑
88	IDA1414-16-2	.110	16E	500u	5.0 ♦	Red	INT	A			26			660n	W/O Buffered Inp	FB197	PS415 ☑
89	DL1414T	.112	4*	0.4m	5.0 ♦	Red	INT	ADE §			26	5.5 ♦		660n	Access Time 280ns	E124g	PY555 ☑
90	DL1814	.112	8*	5.0m	5.0 ♦	Red	INT	ADE §			27%	5.5 ♦		660n	Access Time 600ns	FB203	PY1336
91	MDL2416(A)	.15	4	100u△	5.0 ♦	Red	INT	A			5C*	5.5 ♦		660n	Cursor Function	FB207	PY1343☑
92	MDL2416B(A)	.15	4	1.0m△		Red		A			5A	5.0	150m	660n	With/logic	FB207	PY1343
93	MDL2416C	.15	4	1.0m△		Red		A			5A	5.0	150m	660n	-w/logic	FB207	PY1343
94	DL1416	.16	4*	500u	5.0 ♦	Red	INT	A			26	5.0 ♦	100m	660n	Access Time 500ns	FB202	PY1335☑
95	DL1416T	.16	4	500u		Red		A			26	5.0	100m	660n	With/logic	FB202	PY1335
96	DL2416	.16	4	500u	5.0 ♦	Red	INT	A			26			660n	With/Logic	E184f	PY556a
97	DL2416H	.16	4*	500u	5.0 ♦	Red	INT	ADE			26			660n	Access Time 300ns	E184f	PY556a
98	DL2416T	.16	4*	500u	5.0 ♦	Red	INT	ADE			48%	5.5 ♦		660n	Access Time 350ns	FB204	PY1340
99	HPDL2416	.16	4	500u		Red		A	910m	170m	48	5.5 ♦	170m	655n	w/Logic	E184h	PY556a
100	NSM1416	.16	4	500u△				G			27			660n	With/Logic	204zz	PY1238
101	DL1416B	.16	4*	750u	5.0 ♦	Red	INT	ADE			27%	5.5 ♦		660n	Access Time 500ns	FB202	PY1335☑
102	PD2816	.16	8E	159u△	5.0 ♦	Red	INT	G	750m		27%	5.5 ♦		655n	Cascadable;Prgmbl	FB201	PY1268☑
103	IDA2416-16	.16	16E	500u	5.0 ♦	Red	INT	A			26			660n	Cursor Function	None	PY1549☑
104	IDA1416-32	.16	32E	500u	5.0 ♦	Red	INT	AE	2.0 †	900m	27%	5.0 ♦	390m	660n	Buffered Inputs	FB198	PS416
105	IDA2416-32	.16	32E	500u	5.0 ♦	Red	INT	A			26			660n	Cursor Function	None	PY1549a
106	DL3422	.170	4	500u	5.0 ♦	Red	INT	A			26			660n	With Logic	FB204	PY793 ☑
107	DL3416	.224	4*	500u	5.0 ♦	Red	INT	ADE			26			660n	Access Time 500ns	E224c	PY793 ☑
108	DL3416H	.224	4*	0.5m	5.0 ♦	Red	INT	ADE			26			660n	Access Time 300ns	E224c	PY793
109	IDA3416-16	.225	16E	800u	5.0 ♦	Red	INT	G	2.0 †	850m	27%	5.0 ♦	25m	660n	Cursor Function	None	PS417
110	IDA3416-20	.225	20	800u	5.0 ♦	Red	INT	G	2.5 †	1.1	27%	5.0 ♦	25m	660n	Cursor Function	None	PS417a

SYMBOLS AND CODES EXPLAINED IN INTERPRETER

35. LED CHARACTER DISPLAYS - Intelligent Segmented Alphanumeric (Cont'd)

IN ORDER OF FONT AND: (1) CHAR. HEIGHT (2)NO. CHAR. (3) INTENSITY & (4) TYPE NO.

LINE No.	4 TYPE NUMBER	1 CHAR. HGHT (in)	2 NO. CHAR	3 LUMINOUS INTENSITY Iv MIN (cd)	IF TEST (A)	COLOR	CONN.	DISP NOMEN	PD RATED MAX (W)	IF RATED MAX (A)	TEMP RNGE CODE	FORWARD VOLTAGE VF MAX (V)	IF TEST (A)	PEAK WAVE-LENGTH λP (m)	FEATURES	DRAWINGS SCHE-MATIC	OUTLINE
1	IDA3416-32	.225	32E	800u	5.0 ♦	Red	INT	G	4.0 †	1.7	27%	5.0 ♦	25m	660n	Cursor Function	None	PS418
2	XDS2724P	.31	24	50u		Red		G		1.0m	07	5.0		660n	With/logic;parl	FB113	None
3	XDS2724S	.31	24	50u		Red		G		1.0m	07	5.0		660n	With/logic;seri	FB114	None
4	XDS2732P(A)	.31	32	50u		Red		G		450m	07	5.0		660n	With/logic;parl	FB113	None
5	XDS2732S(A)	.31	32	50u		Red		G		450m	07	5.0		660n	With/logic;seri	FB114	None
6	HPDL1414	.98	4	400u		Red		A	715m	130m	48	5.5 ♦	130m	655n	w/Logic	E124m	PY555
7	PD1165	1.19	1	1.7mΔ		Red		X	1.6	265m	27			635n	8x8 Prog Disp Mod	FB213	PY1650
8	PD1167	1.19	1	1.7mΔ		Green		X	1.6	265m	27			635n	8x8 Prog Disp Mod	FB213	PY1650

DISPLAY, LED SMART 4X7 DOT MATRIX

12	HDSP0963	.29	.5	390u	8.0m	Green		RV	963m	10m	57	2.2	8.0m	565n		None	PY758
13	HDSP0863	.29	.5	490u	8.0m	Yellow		RV	963m	10m	57	2.2	8.0m	583n		None	PY758
14	HDSP0763	.29	.5	620u	8.0m	Red		RV	282m	10m	57	2.2	8.0m	635n	Lo Power	None	PY758
15	HP5082-7356	.29	1	40uΔ		Red	INT	NR	935m		5A			655n	With/Dec,Mem	E081a	PY56 ☑
16	HP5082-7357	.29	1	40uΔ		Red	INT	NL	935m		5A			655n	With/Dec,Mem	E081a	PY56a ☑
17	HP5082-7359	.29	1	40uΔ		Red	INT	H	935m		5A			655n	With/Dec,Mem	E081b	PY56b ☑
18	5082-7300	.29	1	70uΔ	5.0 ♦	Red	INT	NR	935m		28	5.5 ♦		655n	With/Dec,Mem	E081a	PY56
19	5082-7302	.29	1	70uΔ	5.0 ♦	Red	INT	NR	935m		28	5.5 ♦		655n	With/Dec,Mem	E081a	PY56a
20	5082-7304	.29	1	70uΔ	5.0 ♦	Red	CA	PRV	935m		28	5.5 ♦		655n	With/Dec,Mem	E081c	PY56c
21	5082-7340	.29	1	70uΔ	5.0 ♦	Red	INT	H	935m		28	5.5 ♦		655n	With/Dec,Mem	E081b	PY56b
22	HP5082-7300	.29	1	70u		Red	INT	N	935m		28☑	5.5	170m	655n	Dec Driver	E081zy	PY56 ☑
23	HP5082-7302	.29	1	70u		Red	INT	N	935m		28☑	5.5	170m	655n	Dec Driver	E081zy	PY56a ☑
24	HP5082-7304	.29	1	70u		Red	CA	NP	320m	10m	28☑	2.0	10m	655n	+/-,1,Decimal	E081c	PY56c ☑
25	HP5082-7340	.29	1	70u		Red	INT	H	935m		28☑	5.5	170m	655n	Dec Driver	E081zx	PY56b ☑
26	5082-7356	.29	1	85uΔ	5.0 ♦	Red	INT	NR	935m		5A	5.5 ♦		655n	With/Dec,Mem	E081a	PY56
27	5082-7357	.29	1	85uΔ	5.0 ♦	Red	INT	NL	935m		5A	5.5 ♦		655n	With/Dec,Mem	E081a	PY56a
28	5082-7358	.29	1	85uΔ	5.0 ♦	Red	CA	PRV	935m		5A	5.5 ♦		655n	With/Dec,Mem	E081c	PY56c
29	5082-7359	.29	1	85uΔ	5.0 ♦	Red	INT	H	935m		5A	5.5 ♦		655n	With/Dec,Mem	E081b	PY56b
30	HP5082-7358	.29	1	85uΔ	6.0m	Red	CA	NP	320m	10m	5A	2.0	10m	655n	+/-,1,Decimal	E081c	PY56d ☑
31	HDSP0760	.29	1	140u		Red		NR	573m	10m	57			635n	Lo Power	None	PY758
32	HDSP0761	.29	1	140u		Red		NL	573m	10m	57			635n	Lo Power	None	PY758
33	HDSP0762	.29	1	140u		Red		H	573m	10m	57			635n	Lo Power	None	PY758
34	HDSP0781TXVB	.29	1	140uΔ	5.0 ♦	Red	INT	NR	573m		5A	5.5 ♦		635n	With/Dec,Mem	E081a	PY56
35	HDSP0782	.29	1	140uΔ	5.0 ♦	Red	INT	NL	573m		5A	5.5 ♦		635n	With/Dec,Mem	E081a	PY56a
36	HDSP0782TXV	.29	1	140uΔ	5.0 ♦	Red	INT	NL	573m		5A	5.5 ♦		635n	With/Dec,Mem	E081a	PY56a
37	HDSP0782TXVB	.29	1	140uΔ	5.0 ♦	Red	INT	NL	573m		5A	5.5 ♦		635n	With/Dec,Mem	E081a	PY56a
38	HDSP0783	.29	1	140uΔ	5.0 ♦	Red	CA	PRV	573m		5A	5.5 ♦		635n	With/Dec,Mem	E081c	PY56c
39	HDSP0783TXV	.29	1	140uΔ	5.0 ♦	Red	CA	PRV	573m		5A	5.5 ♦		635n	With/Dec,Mem	E081c	PY56c
40	HDSP0783TXVB	.29	1	140uΔ	5.0 ♦	Red	CA	PRV	573m		5A	5.5 ♦		635n	With/Dec,Mem	E081c	PY56c
41	HDSP0784	.29	1	140uΔ	5.0 ♦	Red	INT	H	573m		5A	5.5 ♦		635n	With/Dec,Mem	E081b	PY56b
42	HDSP0784TXV	.29	1	140uΔ	5.0 ♦	Red	INT	H	573m		5A	5.5 ♦		635n	With/Dec,Mem	E081b	PY56b
43	HDSP0784TXVB	.29	1	140uΔ	5.0 ♦	Red	INT	H	573m		5A	5.5 ♦		635n	With/Dec,Mem	E081b	PY56b
44	HDSP0881	.29	1	215u		Yellow	INT	NR	963m	175m*	5A	5.5	105m	583n		E081a	PY56
45	HDSP0882	.29	1	215u		Yellow	INT	NL	963m	175m*	5A	5.5	105m	583n		E081a	PY56a
46	HDSP0883	.29	1	215u		Yellow	CA	PRV	963m	10m	5A	2.2	8m	583n		E081c	PY56c
47	HDSP0960	.29	1	390u		Green		NR	963m	10m	57			565n		None	PY758
48	HDSP0961	.29	1	390u		Green		NL	963m	10m	57			565n		None	PY758
49	HDSP0962	.29	1	390u		Green		H	963m	10m	57			565n		None	PY758
50	HDSP0860	.29	1	490u		Yellow		NR	963m	10m	57			583n		None	PY758
51	HDSP0861	.29	1	490u		Yellow		NL	963m	10m	57			583n		None	PY758
52	HDSP0862	.29	1	490u	8.0m	Yellow	INT	H	963m	10m	57	2.2	8.0m	583n		E081b	PY56c ☑
53	HDSP0883TXVB	.29	1	490u	5.0 ♦	Yellow	CA	RV	963m		5A	5.5 ♦		583n		E081c	None
54	HDSP0884	.29	1	490u	5.0 ♦	Yellow		H	963m		5A	5.5 ♦		583n		E0816	None
55	HDSP0884TXV	.29	1	490u	5.0 ♦	Yellow		H	963m		5A	5.5 ♦		583n		E0816	None
56	HDSP0884TXVB	.29	1	490u	5.0 ♦	Yellow		H	963m		5A	5.5 ♦		583n		E0816	None
57	HDSP0770	.29	1	620u		Red		NR	963m	10m	57			635n	Hi Bright	None	PY758
58	HDSP0771	.29	1	620u		Red		NL	963m	10m	57			635n	Hi Bright	None	PY758
59	HDSP0772	.29	1	620u		Red		H	963m	10m	57			635n	Hi Bright	None	PY758
60	HDSP0773	.29	1	620u	8.0m	Red		NV	963m	10m	57	2.2	8.0m	635n		E081C	PY56d ☑
61	HDSP0791	.29	1	620uΔ	5.0 ♦	Red	INT	NR	963m		5A	5.5 ♦		626n	With/Dec,Mem	E081a	PY56
62	HDSP0791TXV	.29	1	620uΔ	5.0 ♦	Red	INT	NR	963m		5A	5.5 ♦		626n	With/Dec,Mem	E081a	PY56
63	HDSP0791TXVB	.29	1	620uΔ	5.0 ♦	Red	INT	NR	963m		5A	5.5 ♦		626n	With/Dec,Mem	E081a	PY56
64	HDSP0792	.29	1	620uΔ	5.0 ♦	Red	INT	NL	963m		5A	5.5 ♦		626n	With/Dec,Mem	E081a	PY56a
65	HDSP0792TXV	.29	1	620uΔ	5.0 ♦	Red	INT	NL	963m		5A	5.5 ♦		626n	With/Dec,Mem	E081a	PY56a
66	HDSP0792TXVB	.29	1	620uΔ	5.0 ♦	Red	INT	NL	963m		5A	5.5 ♦		626n	With/Dec,Mem	E081a	PY56a
67	HDSP0793	.29	1	620uΔ	5.0 ♦	Red	CA	PRV	963m		5A	5.5 ♦		626n	With/Dec,Mem	E081c	PY56c
68	HDSP0793TXV	.29	1	620uΔ	5.0 ♦	Red	CA	PRV	963m		5A	5.5 ♦		626n	With/Dec,Mem	E081c	PY56c
69	HDSP0793TXVB	.29	1	620uΔ	5.0 ♦	Red	CA	PRV	963m		5A	5.5 ♦		626n	With/Dec,Mem	E081c	PY56c
70	HDSP0794	.29	1	620uΔ	5.0 ♦	Red	INT	H	963m		5A	5.5 ♦		626n	With/Dec,Mem	E081b	PY56b
71	HDSP0794TXV	.29	1	620uΔ	5.0 ♦	Red		H	963m		5A	5.5 ♦		626n	With/Dec,Mem	E0816	PY56b
72	HDSP0794TXVB	.29	1	620uΔ	5.0 ♦	Red		H	963m		5A	5.5 ♦		626n	With/Dec,Mem	E0816	PY56b
73	HDSP0781	.29	1	140 Δ	5.0 ♦	Red	INT	NR	573m		5A	5.5 ♦		635n	With/Dec,Mem	E081a	PY56
74	HDSP0781TXV	.29	1	140 Δ	5.0 ♦	Red	INT	NR	573m		5A	5.5 ♦		635n	With/Dec,Mem	E081a	PY56
75	4N53	.305	.5	40u	6.0m	Red	CA	PR	320m	10m	5A	2.0	10m	670n	(+/-1.)/decdr	E081c	PY758
76	4N51	.305	1	40u	5.0 ♦	Red	INT	NR	935m		5A			670n	On-board memory	E081a	PY758
77	4N52	.305	1	40u	5.0 ♦	Red	INT	NL	935m		5A			670n	On-board memory	E081a	PY758
78	4N54	.305	1	40u	5.0 ♦	Red	INT	H	935m		5A			670n	On-board memory	E081b	PY758

DISPLAY, LED SMART 5X7 DOT MATRIX

82	HDSP2000	.145	4	200uΔ	5.0 ♦	Red	INT	A	1.2		27			665n	On-Board SR	E164zz	PY362 ☑
83	HDSP2001	.145	4	750uΔ	5.0 ♦	Yellow	INT	A	1.2	410m	27			583n	On-Board SR	E164zz	PY362 ☑
84	HDSP2416	.15	.5G	200uΔ	5.0 ♦	Red	INT	A	.66 †#		05			655n	ASCII OPTS	E164zz	PY362
85	HDSP2424	.15	.5G	200u	5.0 ♦	Red	INT	A	.66 †#		05			655n	ASCII OPTS	E164zz	PY362
86	HDSP2432	.15	.5G	200u	5.0 ♦	Red	INT	A	.66 †#		05			655n	ASCII OPTS	E164zz	PY362
87	HDSP2002	.15	4	1.4m	5.0m♦	Red	INT	A	1.2		28	5.2 ♦		635n	With/Dec,Mem	E124j	PY362a
88	HDSP2300	.19	4	200u		Red	INT	A	1.3		27			655n		E124j	PY362a☑
89	HDSP2301	.19	4	1.1m		Yellow	INT	A	1.5		27			583n		E124j	PY362a☑
90	HDSP2302	.19	4	1.4m		Red	INT	A	1.5		27			635n		E124j	PY362a☑
91	HDSP2382	.19	4	1.9m		Red	INT		1.7	100m	28	5.2 ♦		635n		E124j	PY1552
92	HDSP2303	.19	4	2.4m		Green	INT	G	780m		28			568n		E124j	PY362a
93	HDSP2381	.19	4	2.4m		Orange	INT		1.7	100m	28	5.2 ♦		583n		E124j	PY1552
94	HDSP2383	.19	4	2.4m		Green	INT		1.7	100m	28	5.2 ♦		568n		E124j	PY1552
95	PD2435(A)	.20	4	50uΔ	5.0 ♦	Orange	INT	G			27%	5.5 ♦		635n	Cascadable;Prgmbl	None ♦	PY1649☑
96	PD2437(A)	.20	4	50uΔ	5.0 ♦	Green	INT	G			27%	5.5 ♦		565n	Cascadable;Prgmbl	None ♦	PY1649☑
97	MPD2545(A)	.25	4	50uΔ	5.0 ♦	Orange	INT	G			5C*	5.5 ♦		635n	Cascadable;Prgmbl	None ♦	PY1648☑
98	MPD2547(A)	.25	4	50uΔ	5.0 ♦	Green	INT	G			5C*	5.5 ♦		565n	Cascadable;Prgmbl	None ♦	PY1648☑
99	HP5082-7010	.27	1	115uΔ	260m	Red	INT	NL	2.3		59☑	5.5 ♦	350m	655n	. Dec Driver	E081d	PY262a☑
100	HP5082-7100	.27	3	2.2m	100m	Red	OTHR	A	700m	10m	59☑	2.0	50m	655n		E223a	PY63 ☑
101	5082-7100	.27	3	1.0	100m	Red		A	700m#	100m	59	2.0	100m	655n		E223	PY63
102	PD3435(A)	.27	4	50uΔ	5.0 ♦	Orange	INT	G			27%	5.5 ♦		635n	Cascadable;Prgmbl	None	PY1548☑
103	PD3437(A)	.27	4	50uΔ	5.0 ♦	Green	INT	G			27%	5.5 ♦		565n	Cascadable;Prgmbl	None	PY1548☑
104	HDSP2452TXVB	.27	4	.85m☑	5.0 ♦	Red	INT	A	1.5		58	5.2 ♦		635n	w/Dec; Mem	E284d	None
105	HDSP2452TXV	.27	4	1.5m		Red		G	1.5		58			635n			PY855
106	DLG4137(A)	.43	1	500uΔ	5.0 ♦	Green	INT	G			27%	5.5 ♦		565n	96 Char ASCII	FB205	PY1341☑
107	DLO4135(A)	.43	1	500uΔ	5.0 ♦	Orange	INT	G			27%	5.5 ♦		640n	96 Char ASCII	FB205	PY1341☑
108	GPD320(2)	.67	2	200u		Yellow			2.3	6.5m	49			585n	With/Logic	082zz	PY1333
109	GPD370	.67	2	200u		Red			2.3	6.5m	49			630n	With/Logic	082zz	PY1333
110	GPD340	.67	2	600u		Green			2.3	6.5m	49			565n	With/Logic	082zz	PY1333

SYMBOLS AND CODES EXPLAINED IN INTERPRETER

35. LED CHARACTER DISPLAYS- Intelligent 5x7 Dot Matrix (Cont'd)

IN ORDER OF FONT AND: (1) CHAR. HEIGHT (2)NO. CHAR. (3) INTENSITY & (4) TYPE NO.

LINE No.	4 TYPE NUMBER	1 CHAR. HGHT (in)	2 NO. CHAR	3 LUMINOUS INTENSITY Iv MIN (cd)	IF TEST (A)	COLOR	CONN.	DISP NOMEN	PD RATED MAX (W)	IF RATED MAX (A)	TEMP RNGE CODE - +	FORWARD VOLTAGE VF MAX (V)	IF TEST (A)	PEAK WAVE-LENGTH λP (m)	FEATURES	DRAWINGS SCHE-MATIC	OUTLINE
1	DLG7137	.68	1	500uΔ	5.0 ♦	Green	INT	G			27%	5.5 ♦		565n	96 Char ASCII	FB206	PY1342
2	DLO7135	.68	1	500uΔ	5.0 ♦	Orange	INT	G			27%	5.5 ♦		640n	96 Char ASCII	FB206	PY1342
3	IDA7135-16	.68	16	250u	5.0 ♦	Orange	INT	G		220m*	26%	5.0 ♦	170m	640n	96 Char ASCII	FB200	PS419
4	IDA7137-16	.68	16	250u	5.0 ♦	Green	INT	G		220m*	26%	5.0 ♦	170m	565n	96 Char ASCII	FB200	PS419
5	IDA7135-20	.68	20	250u	5.0 ♦	Orange	INT	G		220m*	26%	5.0 ♦	170m	640n	96 Char ASCII	FB200	PS419a
6	IDA7137-20	.68	20	250u	5.0 ♦	Green	INT	G		220m*	26%	5.0 ♦	170m	565n	96 Char ASCII	FB200	PS419a

LED Bar Graph Displays, both standard-and self-driven types, are described beginning on page 91.

IN ORDER OF FONT AND: (1) CHAR. HEIGHT (2) No CHAR. (3) PWR CONSUMP & (4)TYPE No.

DISPLAY, LCD SEVEN-SEGMENT NUMERIC

LINE No.	4 TYPE NUMBER	1 CHAR. HGHT. (in)	2 NO. CHAR	NOMEN	3 MAX. PWR. CONS. Δ-/seg (W)	TEMP RNG. CODE - +	OPERATING VOLTAGE MIN. VOLT (V)	MAX. VOLT (V)	FREQ. MIN. (Hz)	FREQ. MAX. (Hz)	CONTRAST RATIO	RISE TIME tr (s)	DECAY TIME tf (s)	LIFE (hrs)	COL -OR	FEATURES	SCHE-MATIC	DRAWING
4	LCD844-81					26	3.2 †				7†	80m	60m				None	PY ⊠
5	PCID131		4	N		05	2.6	10	30	100		200m	200m				None	PY1042e
6	PCID162		4	N		05	2.6	10	30	100		200m	200m				None	PY1042f
7	FLB350508		4	NEW		25	2.8	6.0	30	1.0k	20	150m	150m*	50k			E284i	PY996a
8	PCID100		4	NK		05	2.6	10	30	100		200m	200m				None	PY1042a
9	PCID110		4	NK		05	2.6	10	30	100		200m	200m				None	PY1042b
10	PCID401		4	NKL	0	05	2.6	10	30	100		200m	200m				None	PY514
11	PCID404		4	NKL	0	05	2.6	10	30	100		200m	200m				None	PY514b
12	PCID501		4	NKL	0	05	2.6	10	30	100		200m	200m				None	PY514a
13	PCID177		5	NR		05	2.6	10	30	100		200m	200m				None	PY1042g
14	PCID122		6	N		05	2.6	10	30	100		200m	200m				None	PY1042d
15	PCID120		6	NL		05	2.6	10	30	100		200m	200m				None	PY1042c
16	PCID200		6	NL		05	2.6	10	30	100		200m	200m				None	PY1042h
17	FRD0109		8*	NE		04	2.7	3.3	50	500		90m	70m	50k	11 %	For Calc	None	PY1247c
18	FRD0109D		8*	NE		04	2.7	3.3	50	500		90m	70m	50k	11 %	For Calc	None	PY1247c
19	PCID305		8	NL	0	05	2.6	10	30	100		200m	200m				None	PY514
20	PCID300		8	NR		05	2.6	10	30	100		200m	200m				None	PY1042j
21	PCID302		8	NR		05	2.6	10	30	100		200m	200m				None	PY1042k
22	LCD834-81		10	NER		26	3.2 †				7†	80m	60m				None	PY1574a
23	LCD840-81		10	NER		26	3.2 †				7†	80m	60m				None	PY1583a
24	LCD848-81		10	NER		26	3.2 †				7†	80m	60m				None	PY1583a
25	LCD850-81		10	NER		26	3.2 †				7†	80m	60m				None	PY1574d
26	LCD907-52		13	NER		26	3.1 †				7†	90m	70m				None	PY1260
27	LCD847-81		15	NER		26	3.2 †				7†	80m	60m				None	PY1581
28	LCD852-81		15	NER		26	3.2 †				7†	80m	60m				None	PY1580a
29	LCM435	.28m	4	C		04	1.5 †										None	PY1587
30	LCM436	.28m	4	C		04	1.5 †										None	PY1587
31	LCM422	.31m	11	C		05	1.5 †										None	PY1586
32	LCM440	.39m	4	C		04	1.5 †										None	PY1588
33	LCM441	.39m	4	C		04	1.5 †										None	PY1588
34	FRS1153P	.71m	4	NCM		55		3.1 †				50m	70m	50k	11 %	Pin Conn	None	PY514k
35	FRS1155P	.71m	4	NEM		55		3.1 †				50m	70m	50k	11 %	Pin Conn	None	PY586c
36	FRS1320P	.71m	5	NM		55		3.1 †				50m	70m	50k	11 %	Pin Conn	None	PY1306
37	FRS1156P	.71m	6	NCM		55		3.1 †				50m	70m	50k	11 %	Pin Conn	None	PY590d
38	FLB600301	.12	6	NEW		25	2.8	6.0	30	1.0k	20	150m	150m*	50k			EB466b	PY1008a
39	711-1	120m	6	NKW		05	2.7	10	25	100	20Ø	120m	185m*	50k	11	FE,Ref,Trn	EB464a	PY451 Δ
40	710-1(2)	130m	3*	NKW		05	2.7	10	25	100	20Ø	120m	185m*	50k	11	FE,Ref,Trn	EB244a	PY449b Δ
41	LCD713-51	.14		NER		26	3.1 †				7†	90m	70m				None	PY ⊠
42	710-3	142m	3*	NKW		05	2.7	10	25	100	20Ø	120m	185m*	50k	11	FE,Ref,Trn	EB244a	PY449b Δ
43	710-2	150m	3*	NKW		05	2.7	10	25	100	20Ø	120m	185m*	50k	11	FE,Ref,Trn	EB244a	PY449b Δ
44	FLB350407	.15	4	NEW		25	2.8	6.0	30	1.0k	20	150m	150m*	50k			E284h	PY996
45	FLB450401	.15	5	NEW		25	2.8	6.0	30	1.0k	20	150m	150m*	50k			E354d	PY1003
46	FTD2013	157m	8*	NEW		05		2.9 †	30	360		80m	80m	50k	11 %		None	PY1283
47	FTD2066	157m	8*	NEW		05		2.9 †	30	360		80m	80m	50k	11 %		None	PY1302
48	3491	.16	1	N	45u†	06	15	90	30	100	15	200m	200m	50k	10	DS	None	None
49	4421	.16	1	N		48	3	18	50	1.0k		100m	100m		%		None	None
50	3402	.16	2	N	45u†	06	35	110	60	90	15	250m	250m	50k	10	DS	None	None
51	706-1	160m	3*	NKW		05	2.7	10	25	100	20Ø	120m	185m*	50k	11	FE,Ref,Trn	EB244a	PY449c Δ
52	3414	.16	4	N	45u†	06	15	120	30	100	15	200m	200m	50k	10	DS	None	None
53	LC150931-111.XX/0S	.16	4	ND	1u†	16	2.8	3.2	30	100	20	80m	120m	100k	11	FE,Ref	None	PY840
54	FLB350401	.16	4	NKW		25	2.8	6.0	30	1.0k	20	150m	150m*	50k			E245b	PY995
55	FLB650401	.16	6	NEW		25	2.8	6.0	30	1.0k	20	150m	150m*	50k			EB526b	PY1010
56	LF4050PJ	.16	6	NKC		15	3.1		32			150m	150m			Transmissive	None	PY935
57	FTD2048	161m	4*	NEW		05		2.9 †	30	360		80m	80m	50k	11 %		None	PY1282b
58	FTS2018	165m	6*	NEW		05		3.0 †	30	360		50m	70m	50k	11 %		None	PY1297
59	FRD0148	165m	8	NE		04	2.7	3.3	50	500		90m	70m	50k	11 %	For Calc	None	None
60	FRD0120	169m	8	NE		04	2.7	3.3	50	500		90m	70m	50k	11 %	For Calc	None	None
61	FRD0155	169m	8	NE		04	2.7	3.3	50	500		90m	70m	50k	11 %	For Calc	None	None
62	FTD2035	169m	8*	NEW		05		2.9 †	30	360		80m	80m	50k	11 %		None	PY1299
63	LF4070NJ	.17	8	NKC		55	3.1		32			150m	150m			Transmissive	None	None ⊠
64	FRD0152	173m	8	NE		04	2.7	3.3	50	500		90m	70m	50k	11 %		None	None
65	FRD0166	173m	8	NE		04	2.7	3.3	50	500		90m	70m	50k	11 %		None	PY1258
66	FRD0188	177m	8	NE		04	2.7	3.3	50	500		90m	70m	50k	11 %	For Calc	None	None
67	LCD703-54	.18		NER		26	3.1 †				7†	90m	70m				None	PY ⊠
68	LCD704-54	.18		NER		26	3.1 †				7†	90m	70m				None	PY ⊠
69	LCD709-54	.18		NER		26	3.1 †				7†	90m	70m				None	PY ⊠
70	708-1	180m	3*	NKW		05	2.7	10	25	100	20Ø	120m	185m*	50k	11	FE,Ref,Trn	EB244a	PY449 Δ
71	708-13	180m	3*	NKW		05	2.7	10	25	100	20Ø	120m	185m*	50k	11	FE,Ref,Trn	EB364c	PY453 Δ
72	FLB350501	.18	4	NKW		25	2.8	6.0	30	1.0k	20	150m	150m*	50k			E245b	PY998
73	LF4055TJ	.18	6	NKC		15	3.1		32			150m	150m			Transmissive	None	PY936
74	711-6	180m	6	NKW		05	2.7	10	25	100	20Ø	120m	185m*	50k	11	FE,Ref,Trn	EB464a	PY451 Δ
75	LF8080SE	.18	8	NR		04	3.1		100			150m	150m			w/Symbol	None	None ⊠
76	LCD825-54	.18	10	NER		26	3.1 †				7†	90m	70m				None	PY1582
77	LCD825-81	.18	10	NER		26	3.2 †				7†	80m	60m				None	PY1582
78	FTD2021	181m	6*	NEW		05		2.9 †	30	360		80m	80m	50k	11 %		None	PY1298
79	FTD2039	181m	8*	NEW		05		2.9 †	30	360		80m	80m	50k	11 %		None	PY1300
80	FRD0251	189m		NE		04	2.7	3.3	50	500		90m	70m	50k	11 %	World Time	None	None
81	FLB600506	.19	6	NEW		25	2.8	6.0	30	1.0k	20	150m	150m*	50k			EB466c	PY1008b
82	FRD0112	197m		NE		04	2.7	3.3	50	500		90m	70m	50k	11 %	For Calc	None	None
83	FRD0112DA	197m		NE		04	2.7	3.3	50	500		90m	70m	50k	11 %	For Calc	None	None
84	FRD0153	197m	8	NE		04	2.7	3.3	50	500		90m	70m	50k	11 %	For Calc	None	None
85	FRD0204	197m	8*	NE		04	2.7	3.3	50	500		90m	70m	50k	11 %	For Calc	None	PY1247
86	FRD0204S	197m	8*	NE		04	2.7	3.3	50	500		90m	70m	50k	11 %	Solar	None	PY1247
87	FRD0292	197m	8*	NE		04	2.7	3.3	50	500		90m	70m	50k	11 %	Solar	None	PY1247
88	FRD0303	197m	8*	NE		04	2.7	3.3	50	500		90m	70m	50k	11 %	Solar	None	PY1248
89	FRD0303B	197m	8*	NE		04	2.7	3.3	50	500		90m	70m	50k	11 %	Solar	None	PY1248
90	FRD0097A	197m	11	NE		04	2.7	3.3	50	500		90m	70m	50k	11 %		None	None
91	LCD838-51	.20				26	3.1 †				7†	90m	70m				None	PY ⊠
92	LTR1341HS	.20	1	NR		26	3.5 Δ	8.0 Δ	30	100	18	60m	95m*			Trf	None ♦	PY1011
93	LTR1341HW	.20	1	NR		28	3.5 Δ	8.0 Δ	30	100	10	60m	95m*			Trf	None ♦	PY1011
94	LTR1341RS	.20	1	NR		26	3.5 Δ	8.0 Δ	30	100	18	60m	95m*			Ref	None ♦	PY1011
95	LTR1341RW	.20	1	NR		28	3.5 Δ	8.0 Δ	30	100	10	60m	95m*			Ref	None ♦	PY1011
96	LTR1341TS	.20	1	NR		26	3.5 Δ	8.0 Δ	30	100	18	60m	95m*			Trn	None ♦	PY1011
97	LTR1341TW	.20	1	NR		28	3.5 Δ	8.0 Δ	30	100	10	60m	95m*			Trn	None ♦	PY1011
98	LTR1341XS	.20	1	NR		26	3.5 Δ	8.0 Δ	30	100	18	60m	95m*			No polar	None ♦	PY1011
99	LTR1341XW	.20	1	NR		28	3.5 Δ	8.0 Δ	30	100	10	60m	95m*			No polar	None ♦	PY1011
100	FE2201ATFG	.2	4	FEM		28		10 Δ	30	100	20	150m	600m	50k	5	Trn	None ♦	PY899
101	FE2201THR	.2	4	FEM		25		10 Δ	30	100	20	150m	600m	50k	2	Ref	None ♦	PY899
102	FLB350502	.20	4	NKW		25	2.8	6.0	30	1.0k	20	150m	150m*	50k			E245b	PY999
103	FE2201	.20	4	NP		25	3.0	5.5	30	35	20†	15m	60m	50k		Field Effect	None	PY899
104	FLB450501	.20	5	NEW		25	2.8	6.0	30	1.0k	20	150m	150m*	50k			E354d	PY1003a
105	LF8075SE	200m	8	NR		04	3.1		100			150m	150m			w/Symbol	None	None ⊠
106	LF8130QE	200m	8	NR		04	3.1		64			150m	150m			Clk Function	None	PY931
107	LF8200SE	200m	8	NR		04	3.1		100			150m	150m			w/Symbol	None	None ⊠
108	LF8220SS	.20	8	NR		04	3.1		100			150m	150m			Solar type	None	None ⊠
109	LF8240SE	200m	8	NR		04	3.1		100			150m	150m			w/Symbol	None	None ⊠

SYMBOLS AND CODES EXPLAINED IN INTERPRETER

36. LCD DISPLAYS - Seven-Segment Numeric (Cont'd)

IN ORDER OF FONT AND: (1) CHAR. HEIGHT
(2) No CHAR. (3) PWR CONSUMP & (4)TYPE No.

LINE No.	4 TYPE NUMBER	1 CHAR. HGHT. (in)	2 NO. CHAR	NOMEN	3 MAX. PWR. CONS. Δ-/seg (W)	TEMP RNG. CODE - +	OPERATING VOLTAGE MIN. VOLT (V)	MAX. VOLT (V)	FREQ. MIN. (Hz)	FREQ. MAX. (Hz)	CONTRAST RATIO	RISE TIME tr (s)	DECAY TIME tf (s)	LIFE (hrs)	COL -OR	FEATURES	SCHE-MATIC	DRAWING
1	LCD832-51	.20	10	NER		26	3.1 †				7†	90m	70m				None	PY1574
2	LCD840-51	.20	10	NER		26	3.1 †				7†	90m	70m				None	PY1583a
3	LCD845-51	.20	10	NER		26	3.1 †				7†	90m	70m				None	PY1583b
4	LCD846-51	.20	10	NER		26	3.1 †				7†	90m	70m				None	PY ☑
5	LCD850-51	.20	10	NER		26	3.1 †				7†	90m	70m				None	PY1574d
6	LCD711-51	.20	13	NER		26	3.1 †				7†	90m	70m				None	PY1577
7	LCD714-51	.20	13	NER		26	3.1 †				7†	90m	70m				None	PY1579
8	FXS4109	201m	4*	NEC		55		3.0 †	30	500		50m	70m	50k	11 %		None	PY1281
9	FRD0125	205m	10	NE		04	2.7	3.3	50	500		90m	70m	50k	11 %		None	None
10	LCD913-51	.21				26	3.1 †				7†	90m	70m				None	PY ☑
11	130B01AA	.21	3*	NREM		15	3 Δ	12 Δ		32 †					11	Ref	None ♦	PY1545
12	130B01AB	.21	3*	NREM		15	3 Δ	12 Δ		32 †					11	Trf	None ♦	PY1545
13	130B01AC	.21	3*	NREM		15	3 Δ	12 Δ		32 †					11	Trf	None ♦	PY1545
14	130B01AD	.21	3*	NREM		15	3 Δ	12 Δ		32 †					*	Trf	None ♦	PY1545
15	130B03BF	.21	3*	NREM		38	4 Δ	12 Δ		32 †					11	Ref	None ♦	PY1545
16	130B03BG	.21	3*	NREM		38	4 Δ	12 Δ		32 †					11	Trf	None ♦	PY1545
17	130B03BH	.21	3*	NREM		38	4 Δ	12 Δ		32 †					11	Trf	None ♦	PY1545
18	130B03BK	.21	3*	NREM		38	4 Δ	12 Δ		32 †					*	Trf	None ♦	PY1545
19	129B01AA	.21	4	NRKM		15	3 Δ	12 Δ		32 †					11	Ref	None ♦	PY1544
20	129B01AB	.21	4	NRKM		15	3 Δ	12 Δ		32 †					11	Trf	None ♦	PY1544
21	129B01AC	.21	4	NRKM		15	3 Δ	12 Δ		32 †					11	Trf	None ♦	PY1544
22	129B01AD	.21	4	NRKM		15	3 Δ	12 Δ		32 †					*	Trf	None ♦	PY1544
23	129B03BF	.21	4	NRKM		38	4 Δ	12 Δ		32 †					11	Ref	None ♦	PY1544
24	129B03BG	.21	4	NRKM		38	4 Δ	12 Δ		32 †					11	Trf	None ♦	PY1544
25	129B03BH	.21	4	NRKM		38	4 Δ	12 Δ		32 †					11	Trf	None ♦	PY1544
26	129B03BK	.21	4	NRKM		38	4 Δ	12 Δ		32 †					*	Trf	None ♦	PY1544
27	FLB550503	.21	6	NEW		25	2.8	6.0	30	1.0k	20	150m	150m*	50k			EB466a	PY1005
28	LCD607-51	.21	20	NERV		26	3.1 †				7†	120m	60m				None	PY1573
29	FRD0239	219m		NE		04	2.7	3.3	50	500		90m	70m	50k	11 %	Solar	None	None
30	FRD0257	219m		NE		04	2.7	3.3	50	500		90m	70m	50k	11 %	Solar	None	None
31	FRD0094	219m	8	NE		04	2.7	3.3	50	500		90m	70m	50k	11 %	For Calc	None	None
32	FRD0113	219m	8*	NE		04	2.7	3.3	50	500		90m	70m	50k	11 %	For Conv Calc	None	PY1253
33	FRD0124	219m	8	NE		04	2.7	3.3	50	500		90m	70m	50k	11 %	for Calcul	None	None
34	FRD0154	219m	8*	NE		04	2.7	3.3	50	500		90m	70m	50k	11 %	For Calc	None	PY1247g
35	FRD0189	219m	8*	NE		04	2.7	3.3	50	500		90m	70m	50k	11 %	For Calc	None	PY1247e
36	FRD0198	219m	8*	NE		04	2.7	3.3	50	500		90m	70m	50k	11 %	Calc	None	PY1247a
37	FRD0203	219m	8	NE		04	2.7	3.3	50	500		90m	70m	50k	11 %		None	None
38	FRD0238	219m	8	NE		04	2.7	3.3	50	500		90m	70m	50k	11 %	For Calc	None	PY1255
39	FRD0280	219m	8*	NE		04	2.7	3.3	50	500		90m	70m	50k	11 %	Solar	None	PY1247b
40	FRD0280A	219m	8*	NE		04	2.7	3.3	50	500		90m	70m	50k	11 %	Solar	None	PY1247b
41	FRD0289	219m	8*	NE		04	2.7	3.3	50	500		90m	70m	50k	11 %	Solar	None	PY1247d
42	FRD0289A	219m	8*	NE		04	2.7	3.3	50	500		90m	70m	50k	11 %	Solar	None	PY1247e
43	LCD831-51	.22				26	3.1 †				7†	90m	70m				None	PY ☑
44	LC554731-312.15/0S	.22	3*	NKEC		16	2.8	3.2	30	100		80m	90m	100k	11	Ref	EB103	PY1105
45	708-2	220m	3*	NKW		05	2.7	10	25	100	20Ø	120m	185m*	50k	11	FE,Ref,Trn	EB244a	PY449 Δ
46	FLB350601	.22	4	NKW		25	2.8	6.0	30	1.0k	20	150m	150m*	50k			E245c	PY449d
47	FLB600601	.22	6	NEW		25	2.8	6.0	30	1.0k	20	150m	150m*	50k			EB466c	PY1008
48	FLB600602	.22	6	NEW		25	2.8	6.0	30	1.0k	20	150m	150m*	50k			EB466c	PY1008c
49	FRD0139	220m	10	NE		04	2.7	3.3	50	500		90m	70m	50k	11 %	For Calc	None	None
50	FRD0267	228m	8	NE		04	2.7	3.3	50	500		90m	70m	50k	11 %	Solar	None	PY1259
51	FRD0240	228m	10*	NE		04	2.7	3.3	50	500		90m	70m	50k	11 %	For Calc	None	PY1250
52	LCD423-62	.23	4	NR		38	3.0 †				10†	20m	60m				None	PY1562
53	LCD412-01	.23	8	NEKC		38	3.0 †				10†	20m	60m				None	PY1558
54	FXS4066	234m	4*	NEC		55		3.0 †	30	500		50m	70m	50k	11 %		None	PY1271
55	FRD0193	236m		NE		04	2.7	3.3	50	500		90m	70m	50k	11 %	For Calc	None	None
56	FRD0216	236m		NE		04	2.7	3.3	50	500		120m	60m	50k	11 %	For Calc	None	None
57	FRD0217	236m		NE		04	2.7	3.3	50	500		120m	60m	50k	11 %	For Calc	None	None
58	FRD0247	236m		NE		04	2.7	3.3	50	500		90m	70m	50k	11 %	Solar	None	None
59	FRD0247A	236m		NE		04	2.7	3.3	50	500		90m	70m	50k	11 %	Solar	None	None
60	FRD0272	236m		NE		04	2.7	3.3	50	500		90m	70m	50k	11 %	Solar	None	PY1247j
61	CM727	236m	4	NEC		27%								50k	11 %	LCD:FXS4066	None	PY1320
62	FXS4083	236m	4*	NEC		55		3.0 †	30	500		50m	70m	50k	11 %		None	PY1278
63	FTD6056	236m	5*	NE		55		5.0 †	30	500		80m	80m	50k	11 %	For Audio TV	None	PY1296
64	FRD0126	236m	8	NE		04	2.7	3.3	50	500		90m	70m	50k	11 %	For Calc	None	None
65	FRD0134	236m	8	NE		04	2.7	3.3	50	500		90m	70m	50k	11 %		None	None
66	FRD0150	236m	8*	NE		04	2.7	3.3	50	500		90m	70m	50k	11 %	For Conv Calc	None	None
67	FRD0151	236m	8*	NE		04	2.7	3.3	50	500		90m	70m	50k	11 %	For Calc	None	PY1247n
68	FRD0164	236m	8	NE		04	2.7	3.3	50	500		90m	70m	50k	11 %		None	PY1262
69	FRD0171	236m	8	NE		04	2.7	3.3	50	500		90m	70m	50k	11 %		None	PY1260
70	FRD0195A	236m	8*	NE		04	2.7	3.3	50	500		90m	70m	50k	11 %	For Calc	None	PY1247i
71	FRD0195G	236m	8*	NE		04	2.7	3.3	50	500		90m	70m	50k	11 %	Solar	None	PY1247i
72	FRD0195K	236m	8*	NE		04	2.7	3.3	50	500		90m	70m	50k	11 %	Solar	None	PY1247i
73	FRD0195S	236m	8*	NE		04	2.7	3.3	50	500		90m	70m	50k	11 %	Solar	None	PY1247i
74	FRD0210	236m	8	NE		04	2.7	3.3	50	500		90m	70m	50k	11 %	For Calc	None	PY1254
75	FRD0214	236m	8	NE		04	2.7	3.3	50	500		90m	70m	50k	11 %	Full Calendar	None	PY1256
76	FRD0224	236m	8*	NE		04	2.7	3.3	50	500		90m	70m	50k	11 %	For Calc	None	PY1247j
77	FRD0224B	236m	8*	NE		04	2.7	3.3	50	500		90m	70m	50k	11 %	For Calc	None	PY1247j
78	FRD0224S	236m	8*	NE		04	2.7	3.3	50	500		90m	70m	50k	11 %	Solar	None	PY1247j
79	FRD0233	236m	8	NE		04	2.7	3.3	50	500		90m	70m	50k	11 %	For Calc	None	None
80	FRD0234	236m	8*	NE		04	2.7	3.3	50	500		90m	70m	50k	11 %	For Calc	None	PY1247f
81	FRD0235	236m	8*	NE		04	2.7	3.3	50	500		120m	60m	50k	11 %	For Conv Calc	None	None
82	FRD0285	236m	8*	NE		04	2.7	3.3	50	500		90m	70m	50k	11 %	Solar	None	PY1247k
83	FRD0285A	236m	8*	NE		04	2.7	3.3	50	500		90m	70m	50k	11 %	Solar	None	PY1247k
84	FRD0286	236m	8*	NE		04	2.7	3.3	50	500		90m	70m	50k	11 %	Solar	None	PY1248a
85	FRD0286A	236m	8*	NE		04	2.7	3.3	50	500		90m	70m	50k	11 %	Solar	None	PY1248b
86	FRD0286B	236m	8*	NE		04	2.7	3.3	50	500		90m	70m	50k	11 %	Solar	None	PY1248c
87	FRD0308	236m	8	NE		04	2.7	3.3	50	500		90m	70m	50k	11 %	For Calc	None	PY1249
88	FRD0107	236m	10	NE		04	2.7	3.3	50	500		120m	60m	50k	11 %		None	PY1264
89	FRD0207	236m	10	NE		04	2.7	3.3	50	500		90m	70m	50k	11 %	For Calc	None	None
90	FRD0213	236m	10	NE		04	2.7	3.3	50	500		90m	70m	50k	11 %	For Calc	None	PY1257
91	FRD0264A	236m	10	NE		04	2.7	3.3	50	500		120m	60m	50k	11 %		None	PY1263
92	FRD0298	236m	11	NE		04	2.7	3.3	50	500		90m	70m	50k	11 %		None	PY1261
93	LCD830-54	.24				26	3.1 †				7†	90m	70m				None	PY ☑
94	LCD905-52	.24				26	3.1 †				7†	90m	70m				None	PY ☑
95	LCD822-55	.24		NER		26	3.1 †				7†	90m	70m				None	PY ☑
96	LCD902-54	.24		NER		26	3.1 †				7†	90m	70m				None	PY ☑
97	3601(2)	.24	1	N		48	3	18	50	1.0k		100m	100m		%		None	None
98	708-6	240m	3*	NKW		05	2.7	10	25	100	20Ø	120m	185m*	50k	11	FE,Ref,Trn	EB244a	PY449a Δ
99	LCM401	.24	8	C		05	1.5 †										None	PY1576
100	LCM412	.24	8	C		04	1.5 †										None	PY1585
101	LTA1310HW	.24	8	NM		28	3.5	8.0	30	100	10	60m	95m*			Trf	None ♦	PY1019
102	LTA1310RS	.24	8	NM		26	3.5	8.0	30	100	18	60m	95m*			Ref	None ♦	PY1019
103	LTA1310RW	.24	8	NM		28	3.5	8.0	30	100	10	60m	95m*			Ref	None ♦	PY1019
104	LTA1310TS	.24	8	NM		26	3.5	8.0	30	100	18	60m	95m*			Trn	None ♦	PY1019
105	LTA1310TW	.24	8	NM		28	3.5	8.0	30	100	10	60m	95m*			Trn	None ♦	PY1019
106	LC382080-411.15/0S	.24	8	NR		16	3.0	3.2	30	100	20	80m	120m	100k	11	Std. Ref.	None ♦	PY959
107	LC382080-411.28/0E	.24	8	NR		28	4.2	4.5	30	100	20	40m	60m	100k	11	Ext. Ref.	None ♦	PY959

SYMBOLS AND CODES
EXPLAINED IN INTERPRETER

36. LCD DISPLAYS - Seven-Segment Numeric (Cont'd)

IN ORDER OF FONT AND: (1) CHAR. HEIGHT (2) No CHAR. (3) PWR CONSUMP & (4)TYPE No.

LINE No.	4 TYPE NUMBER	1 CHAR. HGHT. (in)	2 NO. CHAR	NOMEN	3 MAX. PWR. CONS. Δ-/seg (W)	TEMP RNG. CODE - +	OPERATING VOLTAGE MIN. VOLT (V)	MAX. VOLT (V)	FREQ. MIN. (Hz)	FREQ. MAX. (Hz)	CONTRAST RATIO	RISE TIME tr (s)	DECAY TIME tf (s)	LIFE (hrs)	COL -OR	FEATURES	SCHE-MATIC	DRAWING
1	LF8095SE	240m	8	NR		04	3.1		100			150m	150m			w/Symbol	None	PY930
2	LF8100SE	240m	8	NR		04	3.1		100			150m	150m			w/Symbol	None	None ☑
3	LF8110SE	240m	8	NR		04	3.1		100			150m	150m			w/Symbol	None	None ☑
4	LF8120SS	.24	8	NR		04	3.1		100			150m	150m			Solar type	None	None ☑
5	LF8140SE	240m	8	NR		04	3.1		100			150m	150m			w/Symbol	None	None ☑
6	LCD834-51	.24	10	NER		26	3.1 †				7†	90m	70m				None	PY1574a
7	LCD835-52	.24	10	NER		26	3.1 †				7†	90m	70m				None	PY1583
8	LCD836-51	.24	10	NER		26	3.1 †				7†	90m	70m				None	PY1574c
9	LF8060SE	240m	10	NR		04	3.1		100			150m	150m			Science funct	None	PY932
10	LF8065SE	240m	10	NR		04	3.1		100			150m	150m			Printer	None	PY934
11	FRD0146	240m	11	NE		04	2.7	3.3	50	500		90m	70m	50k	11 %		None	None
12	FRD0165	240m	11	NE		04	2.7	3.3	50	500		90m	70m	50k	11 %		None	None
13	LF8070SE	240m	11	NR		04	3.1		100			150m	150m			Science funct	None	PY933
14	LCD708-52	.24	13	NER		26	3.1 †				7†	90m	70m				None	PY1575
15	LC7020160-412.15/0S																	
		.24	16	NB		16	3.0	3.2	30	100	20	80m	120m	100k	11	FE,Ref,Mux1:2	EB6816zy	PY929
16	LC7020160-412.28/0E																	
		.24	16	NB		28	4.2	4.5	30	100	20	40m	60m	100k	11	FE,Ref,Mux1:2	EB6816zy	PY929
17	LC7020160-430.15/0S																	
		.24	16	NB		16	3.2	3.5	30	100	20	150m	80m	100k	11	FE,Ref,Mux1:4	EB6816zy	PY1463
18	LC7020160-430.28/0E																	
		.24	16	NB		27	4.4	4.7	30	100	20	80m	50m	100k	11	FE,Ref,Mux1:4	EB6816zy	PY1463
19	MB7020160(A)	.24	16	NB		16	2.8	3.2			20	80m	120m	50	11	Logic;Mux1:2	EB3216zz	PY1464
20	MG7020160	.24	16	NB		16	3.0	3.2			20	80m	90m	50k	11	w/Logic;FE	EB3216zy	PY1471
21	126B07AA	.24	16	NEM		15	3 Δ	12 Δ		32 †		35m	80m		11	Ref	EB3816zz	PY1541
22	126B07AB	.24	16	NEM		15	3 Δ	12 Δ		32 †		35m	80m		11	Trf	EB3816zz	PY1541
23	126B07AC	.24	16	NEM		15	3 Δ	12 Δ		32 †		35m	80m		11	Trf	EB3816zz	PY1541
24	126B07AD	.24	16	NEM		15	3 Δ	12 Δ		32 †		35m	80m		*	Trf	EB3816zz	PY1541
25	LCD829-52	.24	18	NER		26	3.1 †				7†	90m	70m				None	PY1580
26	LCD918-81	.24	18	NER		26	3.2 †				7†	80m	60m				None	PY1578
27	LCD920-81	.24	18	NER		26	3.2 †				7†	80m	60m				None	PY1578a
28	FXD4117	244m	6*	NEC		55		3.1 †	30	500		80m	80m	50k	11 %		None	PY1285
29	FRD0256	244m	8*	NE		04	2.7	3.3	50	500		90m	70m	50k	11 %	Solar app	None	PY1247h
30	FRD0256A	244m	8*	NE		04	2.7	3.3	50	500		90m	70m	50k	11 %	Solar app	None	PY1247h
31	FRD0256B	244m	8*	NE		04	2.7	3.3	50	500		90m	70m	50k	11 %	Solar app	None	PY1247h
32	FRD0243	248m	8	NE		04	2.7	3.3	50	500		90m	70m	50k	11 %	Solar	None	PY1247m
33	65025	250m	3*	NEPV	150u	18	2.5	15	30	100	20	150m	150m	50k	11	Ref,Trn,Trf	None	PY513 Δ
34	741-3-1	250m	3*	NLPM	2.5u†	15	3.0	20	30	300	20Ø	120m	18m*	50k	11	No Polarizer	EB364e	PY455a
35	741-3-2	250m	3*	NLPM	2.5u†	15	3.0	20	30	300	20Ø	120m	18m*	50k	11	TexturizedREF	EB364e	PY455a Δ
36	741-3-3	250m	3*	NLPM	2.5u†	15	3.0	20	30	300	20Ø	120m	18m*	50k	11	Transflective	EB364e	PY455a Δ
37	741-3-4	250m	3*	NLPM	2.5u†	15	3.0	20	30	300	20Ø	120m	18m*	50k	11	Transmissive	EB364e	PY455a Δ
38	741-3-5	250m	3*	NLPM	2.5u†	15	3.0	20	30	300	20Ø	120m	18m*	50k	11	Smooth Ref	EB364e	PY455a Δ
39	65025-3HX-XA	250m	4*	NEPK$		58	2.6	10	30	100	20†	80m	110m				EB364a	PY513a
40	65025-3HX-XC	250m	4*	NEPK$		48	3.0	10	30	100	20†	90m	110m				EB364a	PY513a
41	65025-3HX-XD	250m	4*	NEPK$		26	3.0 †		30	100	20†	100m	130m				EB364a	PY513a
42	65025-3HX-XM	250m	4*	NEPK$		26	4.5 †	5.5	30	100	10†	50m	80m				EB364a	PY513a
43	65025-3HX-XQ	250m	4*	NEPK$		25	3.0 †		30	100	18†	90m	120m				EB364a	PY513a
44	65025-4X-XA	250m	4*	NK $		58	2.6	10	30	100	20†	80m	110m				EB364b	PY514g
45	65025-4X-XC	250m	4*	NK $		48	3.0	10	30	100	20†	90m	110m				EB364b	PY514g
46	65025-4X-XD	250m	4*	NK $		26	3.0 †		30	100	20†	100m	130m				EB364b	PY514g
47	65025-4X-XM	250m	4*	NK $		26	4.5	5.5	30	100	10†	50m	80m				EB364b	PY514g
48	65025-4X-XQ	250m	4*	NK $		25	3.0 †		30	100	18†	90m	120m				EB364b	PY514g
49	741-4-1	250m	4	NLPM	2.5u†	15	3.0	20	30	300	20Ø	140m	74m*	50k	11	No Polarizer	EB364f	PY454a Δ
50	741-4-2	250m	4	NLPM	2.5u†	15	3.0	20	30	300	20Ø	140m	74m*	50k	11	TexturizedRef	EB364f	PY454a Δ
51	741-4-3	250m	4	NLPM	2.5u†	15	3.0	20	30	300	20Ø	140m	74m*	50k	11	Transflective	EB364f	PY454a Δ
52	741-4-4	250m	4	NLPM	2.5u†	15	3.0	20	30	300	20Ø	140m	74m*	50k	11	Transmissive	EB364f	PY454a Δ
53	741-4-5	250m	4	NLPM	2.5u†	15	3.0	20	30	300	20Ø	140m	74m*	50k	11	Smooth Ref	EB364f	PY454a Δ
54	LCD428-01	.25	7	NEKC		38	3.0 †				10†	20m	60m				None	PY1571
55	2220-29	250m	36		4.0u†	08	4.0	15	30	100	20	100m	100m	50k	11	Dual Bar	None	None
56	FTS2040	260m	4*	NEW		05		3.0 †	30	360		50m	70m	50k	11 %		None	PY1301
57	FLB350701	.26	4	NKW		25	2.8	6.0	30	1.0k	20	150m	150m*	50k			E245b	PY449e
58	FRD0211	260m	10	NE		04	2.7	3.3	50	500		90m	70m	50k	11 %	For Calc	None	None
59	FRD0212	260m	12*	NE		04	2.7	3.3	50	500		90m	70m	50k	11 %	For Calc	None	PY1251
60	FXD4111	268m	4*	NEC		55		3.1 †	30	500		80m	80m	50k	11 %		None	PY1282a
61	LC241440-101.15/0S																	
		.27	4	NR	4.1u†	16	3.0	6.0	30	200	20	40m	80m	100k	11	Ref	None ♦	PY960
62	LCD436-01	.27	7	NK		04	3.1 †				7†	80m	60m				None	PY1566
63	LCD435-01	.27	7	NR		04	3.1 †				7†	80m	60m				None	PY1562a
64	LCD437-01	.27	8	NDEC		04	3.1 †				7†	80m	60m				None	PY1282a
65	FXD4164	276m	4*	NEC		55		3.0 †	30	500		80m	80m	50k	11 %		None	PY1287
66	SX162-6	.28	3*	NEPV	30u†	28	4.0	15			20†	75m	75m	50k			None	PY588d Δ
67	119B07AA	.28	8	NREM		15	3 Δ	12 Δ				35m	80m		11	REF	EB278zz	PY1539
68	119B07AB	.28	8	NREM		15	3 Δ	12 Δ				35m	80m		11	Trf	EB278zz	PY1539
69	119B07AC	.28	8	NREM		15	3 Δ	12 Δ				35m	80m		11	Trf	EB278zz	PY1539
70	119B07AD	.28	8	NREM		15	3 Δ	12 Δ				35m	80m		*	Trf	EB278zz	PY1539
71	CM751	283m	7	NEC		27%								50k	11 %	LCD:FXD1184	None	PY1322
72	FXD1184	283m	7*	NEC		55		3.1 †	30	500		80m	80m	50k	11 %		None	PY1294
73	FRD0215	295m	10	NE		04	2.7	3.3	50	500		120m	60m	50k	11 %		None	PY1265
74	FRD0215A	295m	10	NE		04	2.7	3.3	50	500		120m	60m	50k	11 %		None	PY1265
75	FRD0295	295m	10	NE		04	2.7	3.3	50	500		120m	60m	50k	11 %	For Calc	None	None
76	3353	300m	3	N	600n†	08	4.0	15	30	100	20	100m	100m	20k	11	FE	None	None
77	C533A5	300m	3*	NC	28u†	26	3.0	15			20†	50m	50m	50k		AM/PM Clock	None	PY591 Δ
78	C533A6	300m	3*	NC	30u†	28	4.0	15			20†	75m	75m	50k		AM/PM Clock	None	PY591 Δ
79	C533A-G	.30	3*	NC	28u	15	3.0	15			20†	100m	120m	50k		AM/PM Clock	None	PY591 Δ
80	C533A-M	.30	3*	NC	28u	29	3.0	15			20†	60m	100m	50k		AM/PM Clock	None	PY591 Δ
81	C533A-X	.30	3*	NC	24u	25	9.0	15			20†	80m	40m	50k		AM/PM Clock	None	PY591 Δ
82	L563A-G	.30	3*	NC	28u	15	3.0	15			20†	100m	120m	50k		12 hr AM/PM	None	PY591a Δ
83	L563A-M	.30	3*	NC	28u	29	3.0	15			20†	60m	100m	50k		12 hr AM/PM	None	PY591a Δ
84	L563A-X	.30	3*	NC	24u	25	9.0	15			20†	80m	40m	50k		12 hr AM/PM	None	PY591a Δ
85	C5335-5	300m	3*	NPV	28u†	16	3.0	15			20†	100m	160m	50k		FE	None	PY587 Δ
86	C5335-6	300m	3*	NPV	30u†	28	4.0	15			20†	75m	75m	50k		FE	None	PY587 Δ
87	C5335G	.30	3*	NPV	28u	15	3.0	15			20†	100m	120m	50k		FE	None	PY587 Δ
88	C5335M	.30	3*	NPV	28u	29	3.0	15			20†	60m	100m	50k		FE	None	PY587 Δ
89	C5335X	.30	3*	NPV	24u	25	9.0	15			20†	80m	40m	50k		FE	None	PY587 Δ
90	FE0101TGB	.3	4	FEM		25		10 Δ	30	100	20	150m	600m	50k	6	No polar	None ♦	PY582
91	FE0101TGG	.3	4	FEM		25		10 Δ	30	100	20	150m	600m	50k	5	No polar	None ♦	PY582
92	FE0101TGQ	.3	4	FEM		25		10 Δ	30	100	20	150m	600m	50k		No polar	None ♦	PY582
93	FE0101TGR	.3	4	FEM		25		10 Δ	30	100	20	150m	600m	50k	2	No polar	None ♦	PY582
94	FE0101TH	.3	4	FEM		25		10 Δ	30	100	20	150m	600m	50k	9	Ref	None ♦	PY582
95	FE0101THB	.3	4	FEM		25		10 Δ	30	100	20	150m	600m	50k	6	Ref	None ♦	PY582
96	FE0101THG	.3	4	FEM		25		10 Δ	30	100	20	150m	600m	50k	5	Ref	None ♦	PY582
97	FE0101THR	.3	4	FEM		25		10 Δ	30	100	20	150m	600m	50k	2	Ref	None ♦	PY582
98	FE0101TI	.3	4	FEM		25		10 Δ	30	100	20	150m	600m	50k		Ref	None ♦	PY582
99	FE0101TIB	.3	4	FEM		25		10 Δ	30	100	20	150m	600m	50k	6	Ref	None ♦	PY582
100	FE0101TIG	.3	4	FEM		25		10 Δ	30	100	20	150m	600m	50k	5	Ref	None ♦	PY582
101	FE0101TIQ	.3	4	FEM		25		10 Δ	30	100	20	150m	600m	50k		Ref	None ♦	PY582
102	FE0101TIR	.3	4	FEM		25		10 Δ	30	100	20	150m	600m	50k	2	Ref	None ♦	PY582
103	FE0101TJ	.3	4	FEM		25		10 Δ	30	100	20	150m	600m	50k		Trf	None ♦	PY582
104	3334(2)	300m	4	N	500n†	06	4.0	15	30	100	20	100m	100m	50k	11		None	None
105	FE0101	300m	4	NEC		05	3.0	10	30		20†	50m	120m			FE	None ♦	PY582 Δ

SYMBOLS AND CODES EXPLAINED IN INTERPRETER

36. LCD DISPLAYS - Seven-Segment Numeric (Cont'd)

IN ORDER OF FONT AND: (1) CHAR. HEIGHT (2) No CHAR. (3) PWR CONSUMP & (4)TYPE No.

LINE No.	4 TYPE NUMBER	1 CHAR. HGHT. (in)	2 NO. CHAR	NOMEN	3 MAX. PWR. CONS. Δ-/seg (W)	TEMP RNG. CODE - +	OPERATING VOLTAGE MIN. VOLT (V)	MAX. VOLT (V)	FREQ. MIN. (Hz)	FREQ. MAX. (Hz)	CONTRAST RATIO	RISE TIME tr (s)	DECAY TIME tf (s)	LIFE (hrs)	COL -OR	FEATURES	SCHE-MATIC	DRAWING
1	35D5R02H	300m	4*	NEM		15	3.0	12	30	60		80m	120m*			Ref	None ♦	PY1083
2	35E3R02GH	300m	4*	NEM		48	4.0	15	30	60		20m	45m*			Ref	None ♦	PY1083
3	35E5R02H	300m	4*	NEM		15	3.0	12	30	60		80m	120m*			Ref	None ♦	PY1083
4	35E9R02GH	300m	4*	NEM		29	4.0	15	30	60		32m	55m*			Ref	None ♦	PY1083
5	35R3R02GH	300m	4*	NEM		48	4.0	15	30	60		20m	45m*			Ref	None ♦	PY1083
6	35R9R02GH	300m	4*	NEM		29	4.0	15	30	60		32m	55m*			Ref	None ♦	PY1083
7	38D3R02H	300m	4	NEM		48	4.0	15	30	60		20m	45m*			Ref	None ♦	PY1349
8	38D8R02H	300m	4	NEM		26	3.0	12	30	60		32m	91m*			Ref	None ♦	PY1349
9	38E3R02GH	300m	4	NEM		48	4.0	15	30	60		20m	45m*			Ref	None ♦	PY1349
10	38E3R02H	300m	4	NEM		48	4.0	15	30	60		20m	45m*			Ref	None ♦	PY1349
11	38E8R02H	300m	4	NEM		26	3.0	12	30	60		32m	91m*			Ref	None ♦	PY1349
12	38R3R02GH	300m	4	NEM		48	4.0	15	30	60		20m	45m*			Ref	None ♦	PY1349
13	D5340-5	300m	4	NEP	28u†	16	3.0	15			20†	100m	160m	50k		FE	None	PY589d Δ
14	D5340-6	300m	4	NEP	30u†	28	4.0	15			20†	75m	75m	50k		FE	None	PY589d Δ
15	D5340G	.30	4	NEP	28u	15	3.0	15			20†	100m	120m	50k		FE	None	PY589d Δ
16	D5340M	.30	4	NEP	28u	29	3.0	15			20†	60m	100m	50k		FE	None	PY589d Δ
17	D5340X	.30	4	NEP	24u	25	9.0	15			20†	80m	40m	50k		FE	None	PY589d Δ
18	D5345-5	300m	4*	NEPV	28u†	16	3.0	15			20†	100m	160m	50k		FE	None	PY621b Δ
19	D5345-6	300m	4*	NEPV	30u†	28	4.0	15			20†	75m	75m	50k		FE	None	PY621b Δ
20	D5345G	.30	4*	NEPV	28u	15	3.0	15			20†	100m	120m	50k		FE	None	PY621b Δ
21	D5345M	.30	4*	NEPV	28u	29	3.0	15			20†	60m	100m	50k		FE	None	PY621b Δ
22	D5345X	.30	4*	NEPV	24u	25	9.0	15			20†	80m	40m	50k		FE	None	PY621b Δ
23	FE0803	.30	6	FE		05	3.0	5.5	30	35	20†	15m	60m	50k	11 %	FE6D.P.	EB526a	PY716
24	D5360-5	300m	6	N	28u†	16	3.0	15			20†	100m	160m	50k		FE	None	PY590
25	D5360-6	300m	6	N	30u†	28	4.0	15			20†	75m	75m	50k		FE	None	PY590b Δ
26	D5360G	.30	6	N	28u	15	3.0	15			20†	100m	120m	50k		FE	None	PY590 Δ
27	D5360M	.30	6	N	28u	29	3.0	15			20†	60m	100m	50k		FE	None	PY590 Δ
28	D5360X	.30	6	N	24u	25	9.0	15			20†	80m	40m	50k		FE	None	PY590 Δ
29	SX518G	.30	8	NBHK		15	1.8	2.5			20	350m	350m	50k		Elastomeric	None ♦	PY993
30	SX518H	.30	8	NBHK		38	2.0	2.8			20	100m	100m	50k		Elastomeric	None ♦	PY993
31	SX585G	.30	8	NBHK		15	1.8	2.5			20	350m	350m	50k		Pinned	None ♦	PY993
32	SX585H	.30	8	NBHK		38	2.0	2.8			20	100m	100m	50k		Pinned	None ♦	PY993
33	F5380-1	300m	8	NEP	24u†	05	2.5	15			20†	100m	100m	50k		FE	None	PY592 Δ
34	F5380-5	300m	8	NEP	28u†	16	3.0	15			20†	100m	160m	50k		FE	None	PY592 Δ
35	F5380-6	300m	8	NEP	30u†	28	4.0	15			20†	75m	75m	50k		FE	None	PY592 Δ
36	F5380G	.30	8	NEP	28u	15	3.0	15			20†	100m	120m	50k		FF	None	PY592 Δ
37	F5380M	.30	8	NEP	28u	29	3.0	15			20†	60m	100m	50k		FF	None	PY592 Δ
38	F5380X	.30	8	NEP	24u	25	9.0	15			20†	80m	40m	50k		FF	None	PY592 Δ
39	SX519G	.30	10	NBHK		15	1.8	2.5			20	350m	350m	50k		Elastomeric	None ♦	PY992
40	SX519H	.30	10	NBHK		38	2.0	2.8			20	100m	100m	50k		Elastomeric	None ♦	PY992
41	SX586G	.30	10	NBHK		15	1.8	2.5			20	350m	350m	50k		Pinned	None ♦	PY992
42	SX586H	.30	10	NBHK		38	2.0	2.8			20	100m	100m	50k		Pinned	None ♦	PY992
43	LTC1120HS	.30	12	NR		26	3.5	8.0	30	100	18	60m	95m*			Trf	None ♦	PY1021
44	LTC1120HW	.30	12	NR		28	3.5	8.0	30	100	10	60m	95m*			Trf	None ♦	PY1021
45	LTC1120RS	.30	12	NR		26	3.5	8.0	30	100	18	60m	95m*			Ref	None ♦	PY1021
46	LTC1120RW	.30	12	NR		28	3.5	8.0	30	100	10	60m	95m*			Ref	None ♦	PY1021
47	LTC1120TS	.30	12	NR		26	3.5	8.0	30	100	18	60m	95m*			Trn	None ♦	PY1021
48	LTC1120TW	.30	12	NR		28	3.5	8.0	30	100	10	60m	95m*			Trn	None ♦	PY1021
49	LTC1120XS	.30	12	NR		26	3.5	8.0	30	100	18	60m	95m*			No polar	None ♦	PY1021
50	LTC1120XW	.30	12	NR		28	3.5	8.0	30	100	10	60m	95m*			No polar	None ♦	PY1021
51	LC382040-401.15/0S	.31	4	NDEK	7.5u†	16	3.0	6.0	30	200	20	40m	80m	100k	11	Std. Ref.	None ♦	PY832
52	LC382040-401.28/0E	.31	4	NDEK	5.0u†	28	3.0	6.0	30	200	20	40m	40m	100k	11	Ext. Ref.	None ♦	PY832
53	S1437QE	.31	4	NKC		04	3.0		32			150m	150m			Reflective	None	PY937
54	S1437QF	.31	4	NKC		04	3.0		32			150m	150m			Transmissive	None	None ☑
55	S1453QE	.31	4	NKC		04	3.0		32			150	150			Reflective	None	PY938
56	S1453QF	.31	4	NKC		04	3.0		32			150	150			Transmissive	None	None ☑
57	LCM402	.31	7	C		05	1.5 †										None	PY1563
58	LCD422-01	.31	11	NEKC		04	3.1 †				7†	80m	60m				None	PY1560
59	LCD413-91	.31	17	NEKC		04	3.1 †				7†	80m	60m				None	PY1568
60	LCD411-91	.31	24	NEKC		04	3.1 †				7†	80m	60m				None	PY1567
61	CM702	315m	4	NEC		27%								50k	11 %	LCD:FXS4066	None	PY1319
62	FXD4177	315m	4*	NEC		55		3.0 †	30	500		80m	80m	50k	11 %		None	PY1288
63	FXS4068	315m	4*	NEC		55		3.0 †	30	500		50m	70m	50k	11 %		None	PY1272
64	FXS4118	315m	4*	NEC		55		3.0 †	30	500		50m	70m	50k	11 %		None	PY1278a
65	FXD4074	315m	6*	NEC		55		3.1 †	30	500		80m	80m	50k	11 %		None	PY1275
66	FRD0106	315m	8	NE		04	2.7	3.3	50	500		90m	70m	50k	11 %	For Calc	None	None
67	FRD0122	315m	8	NE		04	2.7	3.3	50	500		90m	70m	50k	11 %	For Calc	None	None
68	FRD0147	319m	10	NE		04	2.7	3.3	50	500		90m	70m	50k	11 %	For Calc	None	None
69	FSD4179	327m	4*	NEC		55		3.1 †	30	500		80m	80m	50k	11 %		None	PY1289
70	FSD4190	327m	6*	NEC		55		3.1 †	30	500		80m	80m	50k	11 %		None	PY1291
71	LC382232-700.21/0S	.33	4*	NEK	7.5u†	16	3.0	6.0	30	200	20	40m	80m	100k	11	Std. Trf.	None ♦	PY1100
72	LC382232-700.27/0E	.33	4*	NEK	5.0u†	28	3.0	6.0	30	200	20	40m	40m	100k	11	Ext. Trf.	None ♦	PY1100
73	PCIM300	.33	8	N												Up/Down Cntr	None	PY1331
74	FXD1194	335m	4*	NEC		55		3.0 †	30	500		80m	80m	50k	11 %		None	PY1295
75	LTA1300HS	.34	4	NK		26	3.5	8.0	30	100	18	60m	95m*			Trf	None ♦	PY1025
76	LTA1300HW	.34	4	NK		28	3.5	8.0	30	100	10	60m	95m*			Trf	None ♦	PY1025
77	LTA1300RS	.34	4	NK		26	3.5	8.0	30	100	18	60m	95m*			Ref	None ♦	PY1025
78	LTA1300RW	.34	4	NK		28	3.5	8.0	30	100	10	60m	95m*			Ref	None ♦	PY1025
79	LTA1300TS	.34	4	NK		26	3.5	8.0	30	100	18	60m	95m*			Trn	None ♦	PY1025
80	LTA1300TW	.34	4	NK		28	3.5	8.0	30	100	10	60m	95m*			Trn	None ♦	PY1025
81	LTA1300XS	.34	4	NK		26	3.5	8.0	30	100	18	60m	95m*			No polar	None ♦	PY1025
82	LTA1300XW	.34	4	NK		28	3.5	8.0	30	100	10	60m	95m*			No polar	None ♦	PY1025
83	FXS4060	345m	6*	NEC		55		3.1 †	30	500		50m	70m	50k	11 %		None	PY1269
84	LCD612-01	.35		NN		26	3.1 †				7†	90m	70m				None	PY ☑
85	3603	350m	3	N	800n†	08	3.0	12	30	100	20	100m	100m	20k	11	FE	None	None
86	30D5R99H	350m	3	NL		15	3.0	12	30	60		80m	120m*			Ref	None ♦	PY1348
87	30E3R99GH	350m	3	NL		48	4.0	15	30	60		20m	45m*			Ref	None ♦	PY1348
88	30E5R99H	350m	3	NL		15	3.0	12	30	60		80m	120m*			Ref	None ♦	PY1348
89	30E9R99GH	350m	3	NL		29	4.0	15	30	60		32m	55m*			Ref	None ♦	PY1348
90	30R3R99GH	350m	3	NL		48	4.0	15	30	60		20m	45m*			Ref	None ♦	PY1348
91	30R9R99GH	350m	3	NL		29	4.0	15	30	60		32m	55m*			Ref	None ♦	PY1348
92	3940-05	.35	3	NR		15§	3.0	9.0	30	100	20†	75m	150m	50k	95		EB243a	PY815 Δ
93	3940-06	.35	3	NR		19§	4.0	13	30	100	20†	45m	75m	50k	95		EB243a	PY815 Δ
94	FE0804A	350m	4	N		05	3.0 Δ	5.5 Δ	30	35	20†	30m	120m	50k		Transmissiv	None ♦	PY800
95	FE0804J	350m	4	N		05	3.0 Δ	5.5 Δ	30	35	20†	30m	120m	50k		Transflective	None ♦	PY800
96	LC512332-300.15/0S	.35	4*	NEK	6.9u†	16	3.0	6.0	30	200	20	40m	80m	100k	11	Std. Ref.	None ♦	PY1101
97	LC512332-300.21/0S	.35	4*	NEK	4.6u†	16	3.0	6.0	30	200	20	40m	80m	100k	11	Std. Trf.	None ♦	PY1101
98	PCIM17D2S	.35	4	NEK			3.0	3.0 †	32 †			200m				12 Hr	E304m	PY1030
99	PCIM17D3S	.35	4	NEK			3.0	3.0 †	32 †			200m				24 Hr.	E304n	None
100	PCIM17D4	.35	4	NEK				3.0 †		32 †		200m				12 Hr	E304m	PY1030
101	PCIM17D5	.35	4	NEK				3.0 †		32 †		200m				12 Hr	E304n	None
102	33D5R02H	350m	4	NEM		15	3.0	12	30	60		80m	120m*			Ref	None ♦	PY1013
103	33E3R02GH	350m	4	NEM		48	4.0	15	30	60		20m	45m*			Ref	None ♦	PY1013
104	33E5R02H	350m	4	NEM		15	3.0	12	30	60		80m	120m*			Ref	None ♦	PY1013

SYMBOLS AND CODES EXPLAINED IN INTERPRETER

36. LCD DISPLAYS - Seven-Segment Numeric (Cont'd)

IN ORDER OF FONT AND: (1) CHAR. HEIGHT (2) No CHAR. (3) PWR CONSUMP & (4)TYPE No.

LINE No.	4 TYPE NUMBER	1 CHAR. HGHT. (in)	2 NO. CHAR	NOMEN	3 MAX. PWR. CONS. Δ-/seg (W)	TEMP RNG. CODE	OPERATING VOLTAGE MIN. VOLT - + (V)	MAX. VOLT (V)	FREQ. MIN. (Hz)	FREQ. MAX. (Hz)	CONTRAST RATIO	RISE TIME tr (s)	DECAY TIME tf (s)	LIFE (hrs)	COL -OR	FEATURES	SCHE-MATIC	DRAWING
1	33E9R02GH	350m	4	NEM		29	4.0	15	30	60		32m	55m*			Ref	None ♦	PY1013
2	33R3R02GH	350m	4	NEM		48	4.0	15	30	60		20m	45m*			Ref	None ♦	PY1013
3	33R9R02GH	350m	4	NEM		29	4.0	15	30	60		32m	55m*			Ref	None ♦	PY1013
4	65035-3HX-XA	350m	4*	NEPK$		58	2.6	10	30	100	20†	80m	110m				EB404b	PY513b
5	65035-3HX-XC	350m	4*	NEPK$		48	3.0	10	30	100	20†	90m	110m				EB404b	PY513b
6	65035-3HX-XD	350m	4*	NEPK$		26	3.0 †		30	100	20†	100m	130m				EB404b	PY513b
7	65035-3HX-XQ	350m	4*	NEPK$		25	3.0 †		30	100	18†	90m	120m				EB404b	PY513b
8	65035-4X-XA	350m	4*	NK $		26	2.6	10	30	100	20†	80m	110m				EB404c	PY514h
9	65035-4X-XC	350m	4*	NK $		48	3.0	10	30	100	20†	90m	110m				EB404c	PY514h
10	65035-4X-XD	350m	4*	NK $		28	3.0 †		30	100	20†	100m	130m				EB404c	PY514h
11	65035-4X-XM	350m	4*	NK $		26	4.5	5.5	30	100	10†	50m	80m				EB404c	PY514h
12	65035-4X-XQ	350m	4*	NK $		25	3.0 †		30	100	18†	90m	120m				EB404c	PY514h
13	34D5R02H	350m	4	NR		15	3.0	12	30	60		80m	120m*			Ref	None ♦	PY1082
14	34E3R02GH	350m	4	NR		48	4.0	15	30	60		20m	45m*			Ref	None ♦	PY1082
15	34E5R02H	350m	4	NR		15	3.0	12	30	60		80m	120m*			Ref	None ♦	PY1082
16	34E9R02GH	350m	4	NR		29	4.0	15	30	60		32m	55m*			Ref	None ♦	PY1082
17	34R3R02GH	350m	4	NR		48	4.0	15	30	60		20m	45m*			Ref	None ♦	PY1082
18	34R9R02GH	350m	4	NR		29	4.0	15	30	60		32m	55m*			Ref	None ♦	PY1082
19	3900-01	.35	4	NR		57	3.0	9.0	30	100	20	35m	45m*	50k		FE	E404a	PY738
20	3900-05	.35	4	NR		15	3.0	9.0	30	100	20	75m	150m*	50k		FE	E404a	PY738
21	3900-06	.35	4	NR		19	4.5	13	30	100	20	45m	75m*	50k		FE	E404a	PY738
22	3937-01	.35	4	NR		57	3.0	9.0	30	100	20	30m	45m*	50k		FE	E404b	PY750
23	3937-05	.35	4	NR		15	3.0	9.0	30	100	20	75m	150m*	50k		FE	E404b	PY750
24	3937-06	.35	4	NR		19	4.5	13	30	100	20	45m	75m*	50k		FE	E404b	PY750
25	3938-01	.35	4	NR		57	3.0	9.0	30	100	20	30m	45m*	50k		FE	E405a	PY751
26	3938-05	.35	4	NR		15	3.0	9.0	30	100	20	75m	150m*	50k		FE	E405a	PY751
27	3938-06	.35	4	NR		19	4.5	13	30	100	20	45m	75m*	50k		FE	E405a	PY751
28	3970-01	.35	4	NR		57	3.0	9.0	30	100	20	30m	45m*	50k		FE	EB544a	PY752
29	3970-05	.35	4	NR		15	3.0	9.0	30	100	20	75m	150m*	50k		FE	EB544a	PY752
30	3970-06	.35	4	NR		19	4.5	13	30	100	20	45m	75m*	50k		FE	EB544a	PY752
31	36D5R37H	350m	6	N		15	3.0	12	30	60		80m	120m*			Ref	None ♦	PY1087
32	36E3R37GH	350m	6	N		48	4.0	15	30	60		20m	45m*			Ref	None ♦	PY1087
33	36E5R37H	350m	6	N		15	3.0	12	30	60		80m	120m*			Ref	None ♦	PY1087
34	36E9R37GH	350m	6	N		29	4.0	15	30	60		32m	55m*			Ref	None ♦	PY1087
35	36R3R37GH	350m	6	N		48	4.0	15	30	60		20m	45m*			Ref	None ♦	PY1087
36	36R9R37GH	350m	6	N		29	4.0	15	30	60		32m	55m*			Ref	None ♦	PY1087
37	65035-6X-XA	350m	6	NK $		58	2.6	10	30	100	20†	80m	110m				EB506a	PY516b
38	65035-6X-XC	350m	6	NK $		48	3.0	10	30	100	20†	90m	110m				EB506a	PY516b
39	65035-6X-XD	350m	6	NK $		26	3.0 †		30	100	20†	100m	130m				EB506a	PY516b
40	65035-6X-XM	350m	6	NK $		26	4.5	5.5	30	100	10†	50m	80m				EB506a	PY516b
41	65035-6X-XQ	350m	6	NK $		25	3.0 †		30	100	18†	90m	120m				EB506a	PY516b
42	LCD403-91	.35	8	NEKC		38	3.0 †				10†	20m	60m				None	PY1557
43	124B01AA	.35	8	NR		15	3 Δ	12		32 †					11	Ref	None ♦	PY1538
44	124B01AB	.35	8	NR		15	3 Δ	12		32 †					11	Trf	None ♦	PY1538
45	124B01AC	.35	8	NR		15	3 Δ	12		32 †					11	Trf	None ♦	PY1538
46	124B01AD	.35	8	NR		15	3 Δ	12		32 †					*	Trf	None ♦	PY1538
47	124B03BF	.35	8	NR		38	4 Δ	12		32 †					11	Ref	None ♦	PY1538
48	124B03BG	.35	8	NR		38	4 Δ	12		32 †					11	Trf	None ♦	PY1538
49	124B03BH	.35	8	NR		38	4 Δ	12		32 †					11	Trf	None ♦	PY1538
50	124B03BK	.35	8	NR		38	4 Δ	12		32 †					*	Trf	None ♦	PY1538
51	124F01AA	.35	8	NR		15	3 Δ	12 Δ		32					11	Ref	None ♦	PY1538
52	124F01AB	.35	8	NR		15	3 Δ	12 Δ		32					11	Trf	None ♦	PY1538
53	124F01AC	.35	8	NR		15	3 Δ	12 Δ		32					11	Trf	None ♦	PY1538
54	124F01AD	.35	8	NR		15	3 Δ	12 Δ		32					*	Trf	None ♦	PY1538
55	124F03BF	.35	8	NR		38	4 Δ	12 Δ		32					11	Ref	None ♦	PY1538
56	124F03BG	.35	8	NR		38	4 Δ	12 Δ		32					11	Trf	None ♦	PY1538
57	124F03BH	.35	8	NR		38	4 Δ	12		32 †					11	Trf	None ♦	PY1538
58	124F03BK	.35	8	NR		38	4 Δ	12		32 †					*	Trf	None ♦	PY1538
59	122B01AA	.35	8	NREM		15	3 Δ	12 Δ				35m	80m		11	Ref	EB278zy	PY1540
60	122B01AB	.35	8	NREM		15	3 Δ	12 Δ				35m	80m		11	Trf	EB278zy	PY1540
61	122B01AC	.35	8	NREM		15	3 Δ	12 Δ				35m	80m		11	Trf	EB278zy	PY1540
62	122B01AD	.35	8	NREM		15	3 Δ	12 Δ				35m	80m		*	Trf	EB278zy	PY1540
63	LCD517-02	.35	16			27	4.8 †				5†	150m	150m				None	PY ⊠
64	FXS1003	354m	5*	NEC		55		5.0 †	30	500		50m	70m	50k	11 %		None	PY1292
65	FXS1017	354m	5*	NEC		55		5.0 †	30	500		50m	70m	50k	11 %		None	PY1293
66	CM723	354m	6	NEC		27%								50k	11 %	LCD:FXD4069	None	PY1319a
67	CM758	354m	6	NEC		27%								50k	11 %	LCD:FXS4063	None	PY1323
68	FXD4063	354m	6*	NEC		55		3.1 †	30	500		80m	80m	50k	11 %		None	PY1270
69	FXD4069	354m	6*	NEC		55		3.1 †	30	500		80m	80m	50k	11 %		None	PY1273
70	LCD611-01	.37		NERV		26	3.1 †				7†	90m	70m				None	PY ⊠
71	FXD4110	370m	4*	NEC		55		3.1 †	30	500		80m	80m	50k	11 %		None	PY1282
72	LCD438-01	.37	8	NDEC		04	3.1 †				7†	80m	60m				None	PY1282
73	FRD0169	370m	10	NE		04	2.7	3.3	50	500		90m	70m	50k	11 %	For Calc	None	None
74	SX481-5	.38	4	NPV	28u	16	3.0	15			20†	100m	160m	50k			None	PY872 Δ
75	SX481G	.38	4	NPV	28u	15	3.0	15			20†	100m	120m	50k			None	PY872 Δ
76	SX481M	.38	4	NPV	28u	29	3.0	15			20†	60m	100m	50k			None	PY872 Δ
77	SX481X	.38	4	NPV	24u	25	9.0	15			20†	80m	40m	50k			None	PY872 Δ
78	LCD606-51	.39				26	3.1 †				7†	90m	70m				None	PY ⊠
79	LCD415-11	.39		NEKC		07	3.1 †				7†	80m	60m				None	PY ⊠
80	LC513031-320.15/0S	.39	4	NBEM		16	3.2	3.4	30	100	20	120m	80m	100k	11	Ref;Mux1:3	None	PY1465
81	LC522232-300.21/0S	.39	4*	NKC	11u†	16	3.0	6.0	30	200	20	40m	80m	100k	11	FE,Trf	None ♦	PY1108
82	LC522232-300.27/0E	.39	4*	NKC	7.4u†	28	3.0	6.0	30	200	20	40m	40m	100k	11	FE,Trf	None ♦	PY1108
83	LCD440-01	.39	4	NKC		04	3.1 †				7†	80m	60m				None	PY1562b
84	LCD441-01	.39	4	NKC		04	3.1 †				7†	80m	60m				None	PY1566
85	LC513041-300.15/1S	.39	5*	NBPM	12u†	16	3.0	6.0	30	200	20	40m	80m	100k	11	FE,Ref	None ♦	PY958
86	LC513041-300.28/1E	.39	5*	NBPM	8.0u†	28	3.0	6.0	30	200	20	40m	40m	100k	11	FE,Ref	None ♦	PY958
87	LC513041-301.15/0S	.39	5*	NBPM	12u†	16	3.0	6.0	30	200	20	40m	80m	100k	11	FE,Ref	None ♦	PY958
88	LC513041-301.28/0E	.39	5*	NBPM	8.0u†	28	3.0	6.0	30	200	20	40m	40m	100k	11	FE,Ref	None ♦	PY958
89	LC513050-300.15/1S	.39	5	NRM		16	3.0	6.0	30	200		40m	80m	100k	11	Ref	None ♦	PY1487
90	LC513050-300.28/1E	.39	5	NRM		28	3.0	6.0	30	200		40m	40m	100k	11	Ref	None ♦	PY1487
91	LCM405	.39	7	C		05	1.5 †										None	PY1563
92	LCD429-01	.39	7	NEKC		38	3.0 †				10†	20m	60m				None	PY1571a
93	LCD405-91	.39	8	NEKC		38	3.0 †				10†	20m	60m				None	PY1559
94	CM729	394m	4	NEC		27%								50k	11 %	LCD:FXS4079	None	PY1319
95	FXS4079	394m	4*	NEC		55		3.0 †	30	500		50m	70m	50k	11 %		None	PY1277
96	FXS4115	394m	4*	NEC		55		3.0 †	30	500		50m	70m	50k	11 %		None	PY1284
97	FRS1141P	394m	4	NEM		55		3.1 †				50m	70m	50k	11 %	Pin Conn	None	PY714a
98	FXD4084	394m	5*	NEC		55		3.1 †	30	500		80m	80m	50k	11 %		None	PY1279
99	FRS1143P	394m	5	NEM		55		3.1 †				50m	70m	50k	11 %	Pin Conn	None	PY715a
100	FRD0236	394m	12*	NE		04	2.7	3.3	50	500		90m	70m	50k	11 %	For Calc	None	PY1252
101	FE0801	.40	3	FE		05	3.0	5.5	30	35	20†	15m	60m	50k	11	FE3D.P.	EB403a	PY714

SYMBOLS AND CODES EXPLAINED IN INTERPRETER

36. LCD DISPLAYS - Seven-Segment Numeric (Cont'd)

IN ORDER OF FONT AND: (1) CHAR. HEIGHT (2) No CHAR. (3) PWR CONSUMP & (4)TYPE No.

LINE No.	4 TYPE NUMBER	1 CHAR. HGHT. (in)	2 NO. CHAR	NOMEN	3 MAX. PWR. CONS. Δ-/seg (W)	TEMP RNG. CODE - +	OPERATING VOLTAGE MIN. VOLT (V)	MAX. VOLT (V)	FREQ. MIN. (Hz)	FREQ. MAX. (Hz)	CONTRAST RATIO	RISE TIME tr (s)	DECAY TIME tf (s)	LIFE (hrs)	COL -OR	FEATURES	SCHE-MATIC	DRAWING
1	3403	400m	3	N	800n†	06	4.0	15	30	100	20	90m	90m	20k	11	FE	None	None
2	FE0802	.40	4	FE		05	3.0	5.5	30	35	20†	15m	60m	50k	11	FE4D.P.	EB404n	PY715
3	FE0801ABB	.4	4	FEM		28		10 Δ	30	100	20	150m	600m	50k	6	No polar	None ♦	PY714
4	FE0801B	.4	4	FEM		25		10 Δ	30	100	20	150m	600m	50k		No polar	None ♦	PY714
5	FE0801BB	.4	4	FEM		25		10 Δ	30	100	20	150m	600m	50k	2	No polar	None ♦	PY714
6	FE0801BG	.4	4	FEM		25		10 Δ	30	100	20	150m	600m	50k	5	No polar	None ♦	PY714
7	FE0801BQ	.4	4	FEM		25		10 Δ	30	100	20	150m	600m	50k		No polar	None ♦	PY714
8	FE0801BR	.4	4	FEM		25		10 Δ	30	100	20	150m	600m	50k	2	No Polar	None ♦	PY714
9	FE0801C	.4	4	FEM		25		10 Δ	30	100	20	150m	600m	50k	9	Ref	None ♦	PY714
10	FE0801CB	.4	4	FEM		25		10 Δ	30	100	20	150m	600m	50k	6	Ref	None ♦	PY714
11	FE0801CG	.4	4	FEM		25		10 Δ	30	100	20	150m	600m	50k	5	Ref	None ♦	PY714
12	FE0801CR	.4	4	FEM		25		10 Δ	30	100	20	150m	600m	50k	2	Ref	None ♦	PY714
13	FE0801D	.4	4	FEM		25		10 Δ	30	100	20	150m	600m	50k		Ref	None ♦	PY714
14	FE0801DB	.4	4	FEM		25		10 Δ	30	100	20	150m	600m	50k	6	Ref	None ♦	PY714
15	FE0801DG	.4	4	FEM		25		10 Δ	30	100	20	150m	600m	50k	5	Ref	None ♦	PY714
16	FE0801DQ	.4	4	FEM		25		10 Δ	30	100	20	150m	600m	50k		Ref	None ♦	PY714
17	FE0801DR	.4	4	FEM		25		10 Δ	30	100	20	150m	600m	50k	2	Ref	None ♦	PY714
18	FE0801E	.4	4	FEM		25		10 Δ	300	100	20	150m	600m	50k		Trf	None ♦	PY714
19	FE0801EB	.4	4	FEM		25		10 Δ	30	100	20	150m	600m	50k	6	Trf	None ♦	PY714
20	FE0801EG	.4	4	FEM		25		10 Δ	30	100	20	150m	600m	50k	5	Trf	None ♦	PY714
21	FE0801EQ	.4	4	FEM		25		10 Δ	30	100	20	150m	600m	50k		Trf	None ♦	PY714
22	FE0801ER	.4	4	FEM		25		10 Δ	30	100	20	150m	600m	50k	2	Trf	None ♦	PY714
23	FE0801TF	.4	4	FEM		25		10 Δ	30	100	20	150m	600m	50k		Trn	None ♦	PY714
24	FE0801TFB	.4	4	FEM		25		10 Δ	30	100	20	150m	600m	50k	6	Trn	None ♦	PY714
25	FE0801TFG	.4	4	FEM		25		10 Δ	30	100	20	150m	600m	50k	5	Trn	None ♦	PY714
26	FE0801TFQ	.4	4	FEM		25		10 Δ	30	100	20	150m	600m	50k		Trn	None ♦	PY714
27	FE0801TFR	.4	4	FEM		25		10 Δ	30	100	20	150m	600m	50k	2	Trn	None ♦	PY714
28	FE0801TG	.4	4	FEM		25		10 Δ	30	100	20	150m	600m	50k		No Polar	None ♦	PY714
29	FE0801TGB	.4	4	FEM		25		10 Δ	30	100	20	150m	600m	50k	6	No Polar	None ♦	PY714
30	FE0801TGG	.4	4	FEM		25		10 Δ	30	100	20	150m	600m	50k	5	No polar	None ♦	PY714
31	FE0801TGQ	.4	4	FEM		25		10 Δ	30	100	20	150m	600m	50k		No polar	None ♦	PY714
32	FE0801TGR	.4	4	FEM		25		10 Δ	30	100	20	150m	600m	50k	2	No polar	None ♦	PY714
33	FE0801TH	.4	4	FEM		25		10 Δ	30	100	20	150m	600m	50k	9	Ref	None ♦	PY714
34	FE0801THB	.4	4	FEM		25		10 Δ	30	100	20	150m	600m	50k	6	Ref	None ♦	PY714
35	FE0801THG	.4	4	FEM		25		10 Δ	30	100	20	150m	600m	50k	5	Ref	None ♦	PY714
36	FE0801THR	.4	4	FEM		25		10 Δ	30	100	20	150m	600m	50k	2	Ref	None ♦	PY714
37	FE0801TI	.4	4	FEM		25		10 Δ	30	100	20	150m	600m	50k		Ref	None ♦	PY714
38	FE0801TIB	.4	4	FEM		25		10 Δ	30	100	20	150m	600m	50k	6	Ref	None ♦	PY714
39	FE0801TIG	.4	4	FEM		25		10 Δ	30	100	20	150m	600m	50k	5	Ref	None ♦	PY714
40	FE0801TIQ	.4	4	FEM		25		10 Δ	30	100	20	150m	600m	50k		Ref	None ♦	PY714
41	FE0801TIR	.4	4	FEM		25		10 Δ	30	100	20	150m	600m	50k	2	Ref	None ♦	PY714
42	FE0801TJ	.4	4	FEM		25		10 Δ	30	100	20	150m	600m	50k	6	Trf	None ♦	PY714
43	FE0801TJB	.4	4	FEM		25		10 Δ	30	100	20	150m	600m	50k	6	Trf	None ♦	PY714
44	FE0801TJG	.4	4	FEM		25		10 Δ	30	100	20	150m	600m	50k	5	Trf	None ♦	PY714
45	FE0801TJQ	.4	4	FEM		25		10 Δ	30	100	20	150m	600m	50k		Trf	None ♦	PY714
46	FE0801TJR	.4	4	FEM		25		10 Δ	30	100	20	150m	600m	50k	2	Trf	None ♦	PY714
47	LTB1181HS	.40	4	FEM		26	3.5	8.0	30	100	18	60m	95m*			Trf	None ♦	PY1014b
48	LTB1181HW	.40	4	FEM		28	3.5	8.0	30	100	10	60m	95m*			Trf	None ♦	PY1014b
49	LTB1181RS	.40	4	FEM		26	3.5	8.0	30	100	18	60m	95m*			Ref	None ♦	PY1014b
50	LTB1181RW	.40	4	FEM		28	3.5	8.0	30	100	10	60m	95m*			Ref	None ♦	PY1014b
51	LTB1181TS	.40	4	FEM		26	3.5	8.0	30	100	18	60m	95m*			Trn	None ♦	PY1014b
52	LTB1181TW	.40	4	FEM		28	3.5	8.0	30	100	10	60m	95m*			Trn	None ♦	PY1014b
53	LTB1181XS	.40	4	FEM		26	3.5	8.0	30	100	18	60m	95m*			No polar	None ♦	PY1014b
54	LTB1181XW	.40	4	FEM		28	3.5	8.0	30	100	10	60m	95m*			No polar	None ♦	PY1014b
55	LTB1182HS	.40	4	FEM		26	3.5	8.0	30	100	18	60m	95m*			Trf	None ♦	PY1014a
56	LTB1182RS	.40	4	FEM		26	3.5	8.0	30	100	18	60m	95m*			Ref	None ♦	PY1014a
57	LTB1182RW	.40	4	FEM		28	3.5	8.0	30	100	10	60m	95m*			Ref	None ♦	PY1014a
58	LTB1182TS	.40	4	FEM		26	3.5	8.0	30	100	18	60m	95m*			Trn	None ♦	PY1014a
59	LTB1182TW	.40	4	FEM		28	3.5	8.0	30	100	10	60m	95m*			Trn	None ♦	PY1014a
60	LTB1182XS	.40	4	FEM		26	3.5	8.0	30	100	10	60m	95m*			No Polar	None ♦	PY1014a
61	LTB1182XW	.40	4	FEM		28	3.5	8.0	30	100	10	60m	95m*			No Polar	None ♦	PY1014a
62	LTB1190HS	.40	4	FEM		26	3.5	8.0	30	100	18	60m	95m*			Trf	None ♦	PY1014
63	LTB1190HW	.40	4	FEM		28	3.5	8.0	30	100	10	60m	95m*			Trf	None ♦	PY1014
64	LTB1190RS	.40	4	FEM		26	3.5	8.0	30	100	18	60m	95m*			Ref	None ♦	PY1014
65	LTB1190RW	.40	4	FEM		28	3.5	8.0	30	100	10	60m	95m*			Ref	None ♦	PY1014
66	LTB1190TS	.40	4	FEM		26	3.5	8.0	30	100	18	60m	95m*			Trn	None ♦	PY1014
67	LTB1190TW	.40	4	FEM		28	3.5	8.0	30	100	10	60m	95m*			Trn	None ♦	PY1014
68	LTB1190XS	.40	4	FEM		26	3.5	8.0	30	100	18	60m	95m*			No Polar	None ♦	PY1014
69	LTB1190XW	.40	4	FEM		28	3.5	8.0	30	100	10	60m	95m*			No Polar	None ♦	PY1014
70	5644	400m	4	N	600n†	18	4.0	15	30	100	20	100m	100m	50k	11		None	None Ø
71	3906-110	400m	4	NC	150u†	05	4.0	17	30	100	20†	75m	150m*	50k	11	Trn	E404a	PY292e Δ
72	3909-210	400m	4*	NC	150u†	05	4.0	17	30	100	20†	75m	150m*	50k		FE,Trn	E405a	PY621a
73	3909-312	400m	4*	NC	150u†	05	4.0	17	30	100	20†	75m	150m*	50k	11	FE,Trf	E405a	PY621a
74	3909-313	400m	4*	NC	150u†	05	4.0	17	30	100	20†	75m	150m*	50k	11	FE,Ref	E405a	PY621a
75	PCIM17D2M	.40	4	NEK			3.0	3.0 †	32 †			200m				12 Hr.	E304m	PY1030
76	PCIM17D3M	.40	4	NEK			3.0	3.0 †	32 †			200m				24 Hr.	E304n	None
77	45D5R03H	400m	4*	NEM		15	3.0	12	30	60		80m	120m*			Ref	None ♦	PY1083a
78	45E3R03GH	400m	4*	NEM		48	4.0	15	30	60		20m	45m*			Ref	None ♦	PY1083a
79	45E5R03H	400m	4*	NEM		15	3.0	12	30	60		80m	120m*			Ref	None ♦	PY1083a
80	45E9R03GH	400m	4*	NEM		29	4.0	15	30	60		32m	55m*			Ref	None ♦	PY1083a
81	45R3R03GH	400m	4*	NEM		48	4.0	15	30	60		20m	45m*			Ref	None ♦	PY1083a
82	45R9R03GH	400m	4*	NEM		29	4.0	15	30	60		32m	55m*			Ref	None ♦	PY1083a
83	49D5R03H	400m	4*	NEM		15	3.0	12	30	60		80m	120m*			Ref	None ♦	PY1083b
84	49E3R03GH	400m	4*	NEM		48	4.0	15	30	60		30m	45m*			Ref	None ♦	PY1083b
85	49E5R03H	400m	4*	NEM		15	3.0	12	30	60		80m	120m*			Ref	None ♦	PY1083b
86	49E9R03GH	400m	4*	NEM		29	4.0	15	30	60		32m	55m*			Ref	None ♦	PY1083b
87	49R3R03GH	400m	4*	NEM		48	4.0	15	30	60		20m	45m*			Ref	None ♦	PY1083b
88	49R9R03GH	400m	4*	NEM		29	4.0	15	30	60		32m	55m*			Ref	None ♦	PY1083b
89	FE0403	400m	4*	NEM		15	3.0	10	30	100	20†	30m	120m	50k		Ref,Trn,Trf	None ♦	PY585 Δ
90	PCIM174M	.40	4	NK		05	1.2	1.9	32k†							12/24 Hr	None	PY1034
91	PCIM17D6M	.40	4	NL	10u		3.0		32 †			200m	200m			DVM	E304o	None
92	3612-312	400m	4*	NM	21u	05	4.0	7.0	30	100	20†	100m	200m		11	FE;Trf	EB505a	PY224c Δ
93	3624-23	400m	4*	NP	600n†	06	4.0	15	30	100	20	80m	100m	50k	11	FE	None	None
94	3913-01	.40	4	NR		57	3.0	9.0	30	100	20	30m	45m*	50k		FE	EB404o	PY744
95	3913-05	.40	4	NR		15	3.0	9.0	30	100	20	75m	150m*	50k		FE	EB404o	PY744
96	3913-06	.40	4	NR		19	4.5	13	30	100	20	45m	75m*	50k		FE	EB404o	PY744
97	353D3R03H	400m	4*	NRE		48	4.0	15	30	60		20m	45m*			Ref	None ♦	PY1350
98	353D8R03H	400m	4*	NRE		26	3.0	12	30	60		32m	91m*			Ref	None ♦	PY1350
99	353E3R03GH	400m	4*	NRE		48	4.0	15	30	60		20m	45m*			Ref	None ♦	PY1350
100	353E3R03H	400m	4*	NRE		48	4.0	15	30	60		20m	45m*			Ref	None ♦	PY1350
101	353E8R03H	400m	4*	NRE		26	3.0	12	30	60		32m	91m*			Ref	None ♦	PY1350
102	353R3R03GH	400m	4*	NRE		48	4.0	15	30	60		20m	45m*			Ref	None ♦	PY1350
103	103B03	.4	4.5*	NBE		38	4.0 Δ	12 Δ	32 †	32 †		47m	60m		%		E405a	PY621a
104	FE0208	.40	5	FE		05	3.0	5.5	30	35	20†	15m	60m	50k	11	FE2D.P.	EB405d	PY713
105	FE0206AAQ	.4	5	FEM		28		10 Δ	30	100	20	150m	600m	50k		Trn	None ♦	PY712
106	FE0403ADG	.4	5	FEM		28		10 Δ	30	100	20	150m	600m	50k	5	Ref	None ♦	PY585
107	FE0403E	.4	5	FEM		25		10 Δ	30	100	20	150m	600m	50k		Trf	None ♦	PY585
108	FE0802ATJB	.4	5	FEM		28		10 Δ	30	100	20	150m	600m	50k	6	Trf	None ♦	PY715
109	3324-30	400m	5*	N	400n†	18	3.0	15	30	100	20	80m	100m	50k	11	FE	None	None
110	47D5T03	400m	5	NE		15	3	12	30	60		80m	120m		%	Trn	None ♦	PY1084

SYMBOLS AND CODES EXPLAINED IN INTERPRETER

IN ORDER OF FONT AND: (1) CHAR. HEIGHT (2) No CHAR. (3) PWR CONSUMP & (4)TYPE No.

LINE No.	4 TYPE NUMBER	1 CHAR. HGHT. (in)	2 NO. CHAR	NOMEN	3 MAX. PWR. CONS. Δ-/seg (W)	TEMP RNG. CODE	OPERATING VOLTAGE MIN. VOLT - + (V)	MAX. VOLT (V)	FREQ. MIN. (Hz)	FREQ. MAX. (Hz)	CONTRAST RATIO	RISE TIME tr (s)	DECAY TIME tf (s)	LIFE (hrs)	COL -OR	FEATURES	SCHE-MATIC	DRAWING
1	65040-4HX-XA	400m	5*	NEPK$		58	2.6	10	30	100	20†	80m	110m				EB406a	PY612c
2	65040-4HX-XC	400m	5*	NEPK$		48	3.0	10	30	100	20†	90m	110m				EB406a	PY612c
3	65040-4HX-XD	400m	5*	NEPK$		26	3.0 †		30	100	20†	100m	130m				EB406a	PY612c
4	65040-4HX-XM	400m	5*	NEPK$		26	4.5	5.5	30	100	10†	50m	80m				EB406a	PY612c
5	65040-4HX-XQ	400m	5*	NEPK$		25	3.0 †		30	100	18†	90m	120m				EB406a	PY612c
6	SX262-5	.40	5	NEPV	28u	16	3.0	15			20†	100m	160m	50k			None	PY873 Δ
7	SX262G	.40	5	NEPV	28u	15	3.0	15			20†	100m	120m	50k			None	PY873 Δ
8	SX262M	.40	5	NEPV	28u	29	3.0	15			20†	60m	100m	50k			None	PY873 Δ
9	SX262X	.40	5	NEPV	24u	25	9.0	15			20†	80m	40m	50k			None	PY873 Δ
10	SX441-5	.40	5	NEPV	28u	16	3.0	15			20†	100m	160m	50k			None	PY712 Δ
11	SX441G	.40	5	NEPV	28u	15	3.0	15			20†	100m	120m	50k			None	PY712 Δ
12	SX441M	.40	5	NEPV	28u	29	3.0	15			20†	60m	100m	50k			None	PY712 Δ
13	SX441X	.40	5	NEPV	24u	25	9.0	15			20†	80m	40m	50k			None	PY712 Δ
14	103B3-11	.40	5	NLP		38	4.0	12	32	100		40m	60m	50k	11	Ref Rear Conn	E405a	PY720d
15	103B3-12	.40	5	NLP		38	4.0	12	32	100		40m	60m	50k	11	Trf Rear Conn	E405a	PY720d
16	103B3-13	.40	5	NLP		38	4.0	12	32	100		40m	60m	50k	11	Trn Rear Conn	E405a	PY720d
17	103B3-14	.40	5	NLP		38	4.0	12	32	100		40m	60m	50k	*	Trn Rear Conn	E405a	PY720d
18	103B3-26	.40	5	NLP		38	4.0	12	32	100		40m	60m	50k	11	Ref Rear Conn	E405a	PY720d
19	103B3-27	.40	5	NLP		38	4.0	12	32	100		40m	60m	50k	11	Trf Rear Conn	E405a	PY720d
20	103B3-31	.40	5	NLP		38	4.0	12	32	100		40m	60m	50k	2	Ref Rear Conn	E405a	PY720d
21	103B3-32	.40	5	NLP		38	4.0	12	32	100		40m	60m	50k	2	Trf Rear Conn	E405a	PY720d
22	103B3-41	.40	5	NLP		38	4.0	12	32	100		40m	60m	50k	6	Ref Rear Conn	E405a	PY720d
23	103B3-42	.40	5	NLP		38	4.0	12	32	100		40m	60m	50k	6	Trf Rear Conn	E405a	PY720d
24	103B3-51	.40	5	NLP		38	4.0	12	32	100		40m	60m	50k	5	Ref Rear Conn	E405a	PY720d
25	103B3-52	.40	5	NLP		38	4.0	12	32	100		40m	60m	50k	5	Trf Rear Conn	E405a	PY720d
26	47D5R03H	400m	5*	NRK		15	3.0	12	30	60		80m	120m*			Ref	None ♦	PY1084
27	47E3R03GH	400m	5*	NRK		48	4.0	15	30	60		20m	45m*			Ref	None ♦	PY1084
28	47E5R03H	400m	5*	NRK		15	3.0	12	30	60		80m	120m*			Ref	None ♦	PY1084
29	47E9R03GH	400m	5*	NRK		29	4.0	15	30	60		32m	55m*			Ref	None ♦	PY1084
30	47R3R03GH	400m	5*	NRK		48	4.0	15	30	60		20m	45m*			Ref	None ♦	PY1084
31	47R9R03GH	400m	5*	NRK		29	4.0	15	30	60		32m	55m*			Ref	None ♦	PY1084
32	66D3R09H	400m	10	NR		48	4.0	15	30	60		20m	45m*			Ref	None ♦	PY1351
33	66D8R09H	400m	10	NR		26	3.0	12	30	60		32m	91m*			Ref	None ♦	PY1351
34	66E3R09GH	400m	10	NR		48	4.0	15	30	60		20m	45m*			Ref	None ♦	PY1351
35	66E3R09H	400m	10	NR		48	4.0	15	30	60		20m	45m*			Ref	None ♦	PY1351
36	66E8R09H	400m	10	NR		26	3.0	12	30	60		32m	91m*			Ref	None ♦	PY1351
37	66R3R09GH	400m	10	NR		48	4.0	15	30	60		20m	45m*			Ref	None ♦	PY1351
38	LC513041-320.15/0S	.43	4*	NREM		16	3.2	3.4	30	100		120m	80m	100k	11	Ref	EB155a	PY1222
39	FRS1103P	433m	5	NEM		55		3.1 †				50m	70m	50k	11 %	Pin Conn	None	PY1304
40	LTB1020HS	.45	4	FEM		26	3.5	8.0	30	100	18	60m	95m*			Trf	None ♦	PY1012
41	LTB1020HW	.45	4	FEM		28	3.5	8.0	30	100	10	60m	95m*			Trf	None ♦	PY1012
42	LTB1020RS	.45	4	FEM		26	3.5	8.0	30	100	18	60m	95m*			Ref	None ♦	PY1012
43	LTB1020RW	.45	4	FEM		28	3.5	8.0	30	100	10	60m	95m*			Ref	None ♦	PY1012
44	LTB1020TS	.45	4	FEM		26	3.5	8.0	30	100	18	60m	95m*			Trn	None ♦	PY1012
45	LTB1020TW	.45	4	FEM		28	3.5	8.0	30	100	10	60m	95m*			Trn	None ♦	PY1012
46	LTB1020XS	.45	4	FEM		26	3.5 Δ	8.0 Δ	30	100	18	60m	95m*			No polar	None ♦	PY1012
47	LTB1020XW	.45	4	FEM		28	3.5 Δ	8.0 Δ	30	100	10	60m	95m*			No polar	None ♦	PY1012
48	SX139-5	.45	4	NEPV	28u	16	3.0	15			20†	100m	160m	50k			None	PY587 Δ
49	SX139G	.45	4	NEPV	28u	15	3.0	15			20†	100m	120m	50k			None	PY587 Δ
50	SX139M	.45	4	NEPV	28u	29	3.0	15			20†	60m	100m	50k			None	PY587 Δ
51	SX139X	.45	4	NEPV	24u	25	9.0	15			20†	80m	40m	50k			None	PY587 Δ
52	LCD417-11	.45	10	NEKC		38	3.0 †				10†	20m	60m				None	PY1570
53	LCD444-01	.46	10	NEKC		38	3.0 †				10†	20m	60m				None	PY1566
54	CM730	465m	4	NEC		27%								50k	11 %	LCD:FXS4076	None	PY1321
55	FXS4076	465m	4*	NEC		55		3.0 †	30	500		50m	70m	50k	11 %		None	PY1276
56	3291	.47	1	N	50u†	18	6.0	15	30	100	20	200m	200m	30k	11	FE	None	None
57	LC513031-390.28/0E	.47	4	NBEK		28	3	6	30	200	20	40m	40m	100k	11	Ref.	None	PY1467
58	LC513031-390.15/0S	.47	4*	NBEM		16	3	6	30	200	20	40m	80m	100k	11	Ref.	None	PY1467
59	LCD410-91	.47	8	NEKC		38	3.0 †				10†	20m	60m				None	PY1561
60	LCD615-81	.47	10	NER		26	3.2 †				7†	80m	60m				None	PY1574
61	FRD4187	472m	4*	NEC		55		3.0 †	30	500		80m	80m	50k	11 %		None	PY1288a
62	3602	500m	2	N	1.0u†	18	4.0	12	30	100	20	100m	100m	50k	10 $	FE	None	None
63	65050-2X-XA	500m	2*	N $		58	2.6	10	30	100	20†	80m	110m				EB182b	PY749a
64	65050-2X-XC	500m	2*	N $		48	3.0	10	30	100	20†	90m	110m				EB182b	PY749a
65	65050-2X-XD	500m	2*	N $		26	3.0 †		30	100	20†	100m	130m				EB182b	PY749a
66	65050-2X-XM	500m	2*	N $		26	4.5	5.5	30	100	10†	50m	80m				EB182b	PY749a
67	65050-2X-XQ	500m	2*	N $		25	3.0 †		30	100	18†	90m	120m				EB182b	PY749a
68	29D5R19H	500m	2	NL		15	3.0	12	30	60		80m	120m*			Ref	None ♦	PY1079
69	29E3R19GH	500m	2	NL		48	4.0	15	30	60		20m	45m*			Ref	None ♦	PY1079
70	29E5R19H	500m	2	NL		15	3.0	12	30	60		80m	120m*			Ref	None ♦	PY1079
71	29E9R19GH	500m	2	NL		29	4.0	15	30	60		32m	55m*			Ref	None ♦	PY1079
72	29R3R19GH	500m	2	NL		48	4.0	15	30	60		20m	45m*			Ref	None ♦	PY1079
73	29R9R19GH	500m	2	NL		29	4.0	15	30	60		32m	55m*			Ref	None ♦	PY1079
74	FE1901	.50	2	NL		25	3.0	5.5	30	35	20†	15m	60m	50k		Field Effect	None	PY898
75	LC283020-300.15/0S	.5	2	NL	7.9u†	16	3.0	6.0	30	200	20	40m	80m	100k	11	Std. Ref.	None ♦	PY534
76	LC283020-300.28/0E	.5	2	NL	5.2u†	28	3.0	6.0	30	200	20	40m	40m	100k	11	Ext. Ref.	None ♦	PY534
77	LC283020-301.15/1S	.5	2	NL	7.9u†	16	3.0	6.0	30	200	20	40m	80m	100k	11	Ref DIP 5mm	None ♦	PY534
78	LC283020-301.28/1E	.5	2	NL	5.2u†	28	3.0	6.0	30	200	20	40m	40m	100k	11	EXT Ref DIP	None ♦	PY534
79	FE1901ADB	.5	2	NLM		28		10 Δ	30	100	20	150m	600m	50k	6	Ref	None ♦	PY898
80	SX200-5	.50	2	NR	28u	16	3.0	15			20†	100m	160m	50k			None	PY749 Δ
81	SX200G	.50	2	NR	28u	15	3.0	15			20†	100m	120m	50k			None	PY749 Δ
82	SX200M	.50	2	NR	28u	29	3.0	15			20†	60m	100m	50k			None	PY749 Δ
83	SX200X	.50	2	NR	24u	25	9.0	15			20†	80m	40m	50k			None	PY749 Δ
84	5623	500m	3	N	1.0u†	06	4.0	15	30	100	20	90m	100m	20k	11	Digit w/Bar	None	None
85	FE0201	500m	3*	NBPV	425u	15	3.0	17	30	100	20†	20m	95m	50k		Ref,Trn,Trf	None ♦	PY513 Δ
86	FE0203	500m	3*	NBPV		15	3.0	10	30	100	20†	30m	120m	50k		Ref,Trn,Trf	None	PY583 Δ
87	3624-26	500m	3	NC	700n†	06	4.0	15	30	100	20	100m	100m	50k	11	FE;AM/PM	None	None
88	3902-210	500m	3*	NC	150u†	05	4.0	17	30	100	20†	75m	150m*	50k		FE,Trn	E404b	PY513
89	3902-312	500m	3*	NC	150u†	05	4.0	17	30	100	20†	75m	150m*	50k	11	FE,Trn	E404b	PY513
90	3902-313	500m	3*	NC	150u†	05	4.0	17	30	100	20†	75m	150m*	50k	11	FE,Ref	E404b	PY513
91	3930-210	500m	3*	NC		15	4.0	17	30	100	20†	75m	150m*	50k		Trn	EB404i	PY1093 Δ
92	3930-312	500m	3*	NC		15	4.0	17	30	100	20†	75m	150m*	50k	11	Trf	EB404i	PY1093 Δ
93	3930-313	500m	3*	NC		15	4.0	17	30	100	20†	75m	150m*	50k	11	Ref	EB404i	PY1093 Δ
94	41D5R03H	500m	3*	NEM		15	3.0	12	30	60		80m	120m*			Ref	None ♦	PY1081a
95	41E3R03GH	500m	3*	NEM		48	4.0	15	30	60		20m	45m*			Ref	None ♦	PY1081a
96	41E5R03H	500m	3*	NEM		15	3.0	12	30	60		80m	120m*			Ref	None ♦	PY1081a
97	41E9R03GH	500m	3*	NEM		29	4.0	15	30	60		32m	55m*			Ref	None ♦	PY1081a
98	41R3R03GH	500m	3*	NEM		48	4.0	15	30	60		20m	45m*			Ref	None ♦	PY1081a
99	41R9R03GH	500m	3*	NEM		29	4.0	15	30	60		32m	55m*			Ref	None ♦	PY1081a
100	43D5R03H	500m	3*	NEM		15	3.0	12	30	60		80m	120m*			Ref	None ♦	PY1081b
101	43E3R03GH	500m	3*	NEM		48	4.0	15	30	60		20m	45m*			Ref	None ♦	PY1081b
102	43E5R03H	500m	3*	NEM		15	3.0	12	30	60		80m	120m*			Ref	None ♦	PY1081b
103	43E9R03GH	500m	3*	NEM		29	4.0	15	30	60		32m	55m*			Ref	None ♦	PY1081b

SYMBOLS AND CODES EXPLAINED IN INTERPRETER

36. LCD DISPLAYS- Seven-Segment Numeric (Cont'd)

IN ORDER OF FONT AND: (1) CHAR. HEIGHT (2) No CHAR. (3) PWR CONSUMP & (4)TYPE No.

LINE No.	4 TYPE NUMBER	1 CHAR. HGHT. (in)	2 NO. CHAR	NOMEN	3 MAX. PWR. CONS. Δ-/seg (W)	TEMP RNG. CODE - +	OPERATING VOLTAGE MIN. VOLT (V)	MAX. VOLT (V)	FREQ. MIN. (Hz)	FREQ. MAX. (Hz)	CONTRAST RATIO	RISE TIME tr (s)	DECAY TIME tf (s)	LIFE (hrs)	COL -OR	FEATURES	SCHE-MATIC	DRAWING
1	43R3R03GH	500m	3*	NEM		48	4.0	15	30	60		20m	45m*			Ref	None ♦	PY1081b
2	43R9R03GH	500m	3*	NEM		29	4.0	15	30	60		32m	55m*			Ref	None ♦	PY1081b
3	FE0402	500m	3*	NEM		15	3.0	10	30	100	20†	30m	120m	50k		Ref,Trn,Trf	None ♦	PY584 Δ
4	65050	500m	3*	NEPV	150u	18	2.5	15	30	100	20	150m	150m	50k	11	Ref,Trn,Trf	None	PY513 Δ
5	H5535-5	500m	3*	NEPV	28u†	16	3.0	15			20†	100m	160m	50k		FE	None	PY588 Δ
6	H5535-6	500m	3*	NEPV	30u†	28	4.0	15			20†	75m	75m	50k		FE	None	PY588 Δ
7	H5535G	.50	3*	NEPVV	28u	15	3.0	15			20†	100m	120m	50k		FE	None	PY588 Δ
8	H5535M	.50	3*	NEPV	28u	29	3.0	15			20†	60m	100m	50k		FE	None	PY588 Δ
9	H5535X	.50	3*	NEPV	24u	25	9.0	15			20†	80m	40m	50k		FE	None	PY588 Δ
10	SX140-6	500m	3*	NEPV	30u†	28	4.0	15			20†	75m	75m	50k			None	PY588 Δ
11	LC513031-307.15/0S	.5	3*	NERM		16	3.0	6.0	30	200		40m	80m	100k	11	Ref	None ♦	PY1490
12	LC513031-307.28/0E	.5	3*	NERM		28	3.0	6.0	30	200		40m	40m	100k	11	Ref	None ♦	PY1490
13	LC513031-309.15/0S	.5	3*	NERM		16	3.0	6.0	30	200		40m	80m	100k	11	Ref	None ♦	PY830
14	LC513031-309.28/0E	.5	3*	NERM		28	3.0	6.0	30	200		40m	40m	100k	11	Ref	None ♦	PY830
15	739-2-1	500m	3*	NLPC	20u†	15	3.0	20	30	300	20Ø	100m	100m*	50k	11	No Polarizer	EB404r	PY681 Δ
16	739-2-2	500m	3*	NLPC	20u†	15	3.0	20	30	300	20Ø	100m	100m*	50k	11	Text Ref	EB404r	PY681 Δ
17	739-2-3	500m	3*	NLPC	20u†	15	3.0	20	30	300	20Ø	100m	100m*	50k	11	Transflective	EB404r	PY681 Δ
18	739-2-4	500m	3*	NLPC	20u†	15	3.0	20	30	300	20Ø	100m	100m*	50k	11	Transmissive	EB404r	PY681 Δ
19	739-2-5	500m	3*	NLPC	20u†	15	3.0	20	30	300	20Ø	100m	100m*	50k	11	Smooth Ref	EB404r	PY681 Δ
20	3600	500m	3	NP	1.0u†	06	4.0	15	30	100	20	100m	100m	50k	11	FE	None	None
21	3624-22	500m	3	NP	700n†	18	4.0	15	30	100	20	100m	100m	30k	11	FE	None	None
22	3624-28	500m	3	NPE	700n†	06	4.0	15	30	100	20	100m	100m	50k	11	FE;BAR	None	None
23	739-3-1	500m	3*	NPM	20u†	15	3.0	20	30	300	20Ø	100m	100m*	50k	11	No Polarizer	EB404s	PY681a Δ
24	739-3-2	500m	3*	NPM	20u†	15	3.0	20	30	300	20Ø	100m	100m*	50k	11	Text Ref	EB404s	PY681a Δ
25	739-3-3	500m	3*	NPM	20u†	15	3.0	20	30	300	20Ø	100m	100m*	50k	11	Transflective	EB404s	PY681a Δ
26	739-3-4	500m	3*	NPM	20u†	15	3.0	20	30	300	20Ø	100m	100m*	50k	11	Transmissive	EB404s	PY681a Δ
27	739-3-5	500m	3*	NPM	20u†	15	3.0	20	30	300	20Ø	100m	100m*	50k	11	Smooth Ref	EB404s	PY681a Δ
28	H2535-5	500m	3*	NPV	28u†	26	3.0	15			20†	50m	50m	50k		FE	None	PY587a Δ
29	H2535-6	500m	3*	NPV	30u†	28	4.0	15			20†	75m	75m	50k		FE	None	PY587a Δ
30	FE0203ADG	.5	4	FEM		28		10 Δ	30	100	20	150m	600m	50k	5	Ref	None ♦	PY583
31	FE0203EG	.5	4	FEM		25		10 Δ	30	100	20	150m	600m	50k	5	Trf	None ♦	PY583
32	FE0402ACG	.5	4	FEM		28		10 Δ	30	100	20	150m	600m	50k	5	Ref	None ♦	PY584
33	FE0402ADB	.5	4	FEM		28		10 Δ	30	100	20	150m	600m	50k	6	Ref	None ♦	PY584
34	FE0402DB	.5	4	FEM		25		10 Δ	30	100	20	150m	600m	50k	6	Ref	None ♦	PY584
35	LTB1080HS	.50	4	FEM		26	3.5	8.0	30	100	18	60m	95m*			Trf	None ♦	PY1013
36	LTB1080HW	.50	4	FEM		28	3.5	8.0	30	100	10	60m	95m*			Trf	None ♦	PY1013
37	LTB1080RS	.50	4	FEM		26	3.5	8.0	30	100	18	60m	95m*			Ref	None ♦	PY1013
38	LTB1080RW	.50	4	FEM		28	3.5	8.0	30	100	10	60m	95m*			Ref	None ♦	PY1013
39	LTB1080TS	.50	4	FEM		26	3.5	8.0	30	100	18	60m	95m*			Trn	None ♦	PY1013
40	LTB1080TW	.50	4	FEM		28	3.5	8.0	30	100	10	60m	95m*			Trn	None ♦	PY1013
41	LTB1080XS	.50	4	FEM		26	3.5	8.0	30	100	18	60m	95m*			No polar	None ♦	PY1013
42	LTB1080XW	.50	4	FEM		28	3.5	8.0	30	100	10	60m	95m*			No polar	None ♦	PY1013
43	LTB1091HS	.50	4	FEM		26	3.5	8.0	30	100	18	60m	95m*			Trf	None ♦	PY1013b
44	LTB1091HW	.50	4	FEM		28	3.5	8.0	30	100	10	60m	95m*			Trf	None ♦	PY1013b
45	LTB1091RS	.50	4	FEM		26	3.5	8.0	30	100	18	60m	95m*			Ref	None ♦	PY1013b
46	LTB1091RW	.50	4	FEM		28	3.5	8.0	30	100	10	60m	95m*			Ref	None ♦	PY1013b
47	LTB1091TS	.50	4	FEM		26	3.5	8.0	30	100	18	60m	95m*			Trn	None ♦	PY1013b
48	LTB1091TW	.50	4	FEM		28	3.5	8.0	30	100	10	60m	95m*			Trn	None ♦	PY1013b
49	LTB1091XS	.50	4	FEM		26	3.5	8.0	30	100	18	60m	95m*			No polar	None ♦	PY1013b
50	LTB1091XW	.50	4	FEM		28	3.5	8.0	30	100	10	60m	95m*			No polar	None ♦	PY1013b
51	LTB1092HS	.50	4	FEM		26	3.5	8.0	30	100	18	60m	95m*			Trf	None ♦	PY1013a
52	LTB1092HW	.50	4	FEM		28	3.5	8.0	30	100	10	60m	95m*			Trf	None ♦	PY1013a
53	LTB1092RS	.50	4	FEM		26	3.5	8.0	30	100	18	60m	95m*			Ref	None ♦	PY1013a
54	LTB1092RW	.50	4	FEM		28	3.5	8.0	30	100	10	60m	95m*			Ref	None ♦	PY1013a
55	LTB1092TS	.50	4	FEM		26	3.5	8.0	30	100	18	60m	95m*			Trn	None ♦	PY1013a
56	LTB1092TW	.50	4	FEM		28	3.5	8.0	30	100	10	60m	95m*			Trn	None ♦	PY1013a
57	LTB1092XS	.50	4	FEM		26	3.5	8.0	30	100	18	60m	95m*			No polar	None ♦	PY1013a
58	LTB1092XW	.50	4	FEM		28	3.5	8.0	30	100	10	60m	95m*			No polar	None ♦	PY1013a
59	FE0205	.50	4	HE		05	3.0	5.5	30	35	20†	15m	60m	50k	11	FE	EB404m	PY711
60	3604(1)	500m	4	N	1.0u†	08	4.0	15	30	100	20	100m	100m	50k	11	FE	None	None
61	3614	500m	4	N	800n†	18	5.0	15	30	100	20	100m	100m	50k	11	FE	None	None
62	3624-06	500m	4	N	1.0u†	06	4.0	15	30	100	20	100m	100m	50k	11	FE	None	None
63	3624-16	500m	4	N	1.0u†	08	4.0	15	30	100	20	100m	100m	50k	11	FE	None	None
64	3624-24	500m	4	N	800n†	18	5.0	15	30	100	20	100m	100m	50k	11	FE	None	None
65	3624-27	500m	4	N	800n†	26$	5.0	15	30	100	20	80m	60m	30k	11	MPLX	None	None
66	FE0204A	500m	4	N		05	3.9 Δ	4.3 Δ	100	200	5†	300m	300m	50k		Transmissive	E204h	PY797a
67	SX172-6	500m	4	N	30u†	28	4.0	15			20†	75m	75m	50k			None	PY514b Δ
68	FE0202	500m	4	NBK	425u	15	3.0	17	30	100	20†	20m	95m	50k		Ref,Trn,Trf	None ♦	PY514 Δ
69	LC513031-300.15/1S	.5	4	NBPM	16u†	16	3.0	6.0	30	200	20	40m	80m	100k	11	FE,Ref	None ♦	PY1103
70	LC513031-300.28/1E	.5	4*	NBPM	11u†	28	3.0	6.0	30	200	20	40m	40m	100k	11	FE,Ref	None ♦	PY1103
71	LC513031-302.15/1S	.5	4*	NBPM	12u†	16	3.0	6.0	30	200	20	40m	80m	100k	11	FE,Ref	None ♦	PY1103
72	LC513031-302.27/1E	.5	4*	NBPM	8.4u†	28	3.0	6.0	30	200	20	40m	40m	100k	11	FE,Trf	None ♦	PY1103
73	LC513031-302.28/1E	.5	4*	NBPM	8.4u†	28	3.0	6.0	30	200	20	40m	40m	100k	11	FE,Ref	None ♦	PY1103
74	LC513031-303.15/0S	.5	4*	NBPM	12u†	16	3.0	6.0	30	200	20	40m	80m	100k	11	FE,Ref	None ♦	PY1103
75	LC513031-303.28/0E	.5	4*	NBPM	8.4u†	28	3.0	6.0	30	200	20	40m	40m	100k	11	FE,Ref	None ♦	PY1103
76	LC513040-301.15/1S	.5	4*	NBVK	17u†	16	3.0	6.0	30	200	20	40m	80m	100k	11	FE,Ref	None ♦	PY829
77	LC513040-301.21/1S	.5	4*	NBVK	17u†	16	3.0	6.0	30	200	20	40m	80m	100k	11	FE,Trf	None ♦	PY829
78	LC513040-301.27/1E	.5	4*	NBVK	11u†	28	3.0	6.0	30	200	20	40m	40m	100k	11	FE,Trf	None ♦	PY829
79	LC513040-301.28/1E	.5	4*	NBVK	11u†	28	3.0	6.0	30	200	20	40m	40m	100k	11	FE,Ref	None ♦	PY829
80	LC513040-303.15/0S	.5	4*	NBVK	17u†	16	3.0	6.0	30	200	20	40m	80m	100k	11	FE,Ref	None ♦	PY829
81	LC513040-303.28/0E	.5	4*	NBVK	11u†	28	3.0	6.0	30	200	20	40m	40m	100k	11	FE,Ref	None ♦	PY829
82	3906-210	500m	4	NC	150u†	15	4.0	17	30	100	20†	75m	150m*	50k		FE,Trn	E404a	PY514
83	3906-312	500m	4	NC	150u†	15	4.0	17	30	100	20†	75m	150m*	50k	11	FE,Trf	E404a	PY514
84	3906-313	500m	4	NC	150u†	15	4.0	17	30	100	20†	75m	150m*	50k	11	FE,Ref	E404a	PY514
85	3929-210	500m	4	NC		15	4.0	17	30	100	20†	75m	150m*	50k		Trn	EB404j	PY514 Δ
86	3929-312	500m	4	NC		15	4.0	17	30	100	20†	75m	150m*	50k	11	Trf	EB404j	PY514 Δ
87	3929-313	500m	4	NC		15	4.0	17	30	100	20†	75m	150m*	50k	11	Ref	EB404j	PY514 Δ
88	PCIM17D2	.50	4	NEK			3.0	3.0 †	32 †			200m				12 Hr.	E304m	PY1030
89	PCIM17D3	.50	4	NEK			3.0	3.0 †	32 †			200m				24 Hr.	E304n	None
90	PCIM17D6	.50	4	NEK			3.0	3.0 †	32 †			200m				DVM	E304o	None
91	H5540-5	500m	4	NEP	28u†	16	3.0	15			20†	100m	160m	50k		FE	None	PY589 Δ
92	H5540-6	500m	4	NEP	30u†	28	4.0	15			20†	75m	75m	50k		FE	None	PY589 Δ
93	H5540G	.50	4	NEP	28u	15	3.0	15			20†	100m	120m	50k		FE	None	PY589 Δ

SYMBOLS AND CODES EXPLAINED IN INTERPRETER

36. LCD DISPLAYS - Seven-Segment Numeric (Cont'd)

IN ORDER OF FONT AND: (1) CHAR. HEIGHT
(2) No CHAR. (3) PWR CONSUMP & (4)TYPE No.

LINE No.	4 TYPE NUMBER	1 CHAR. HGHT. (in)	2 NO. CHAR	NOMEN	3 MAX. PWR. CONS. Δ-/seg (W)	TEMP RNG. CODE - +	OPERATING VOLTAGE MIN. VOLT (V)	MAX. VOLT (V)	FREQ. MIN. (Hz)	FREQ. MAX. (Hz)	CONTRAST RATIO	RISE TIME tr (s)	DECAY TIME tf (s)	LIFE (hrs)	COL -OR	FEATURES	SCHE-MATIC	DRAWING
1	H5540M	.50	4	NEP	28u	29	3.0	15			20†	60m	100m	50k		FE	None	PY589 Δ
2	H5540X	.50	4	NEP	24u	35	9.0	15			20†	80m	40m	50k		FE	None	PY589 Δ
3	SX190-5	.50	4	NEP	28u	16	3.0	15			20†	100m	160m	50k			None	PY525 Δ
4	SX190G	.50	4	NEP	28u	15	3.0	15			20†	100m	120m	50k			None	PY525 Δ
5	SX190M	.50	4	NEP	28u	29	3.0	15			20†	60m	100m	50k			None	PY525 Δ
6	SX190X	.50	4	NEP	24u	25	9.0	15			20†	80m	40m	50k			None	PY525 Δ
7	65050-3HLX-XA	500m	4*	NEPK$		58	2.6	10	30	100	20†	80m	110m			LO BAT	EB406a	PY583
8	65050-3HLX-XC	500m	4*	NEPK$		48	3.0	10	30	100	20†	90m	110m			LO BAT	EB406a	PY583
9	65050-3HLX-XD	500m	4*	NEPK$		26	3.0 †		30	100	20†	100m	130m			LO BAT	EB406a	PY583
10	65050-3HLX-XM	500m	4*	NEPK$		26	4.5	5.5	30	100	10†	50m	80m			LO BAT	EB406a	PY583
11	65050-3HLX-XQ	500m	4*	NEPK$		25	3.0 †		30	100	18†	90m	120m			LO BAT	EB406a	PY583
12	65050-3HX-XA	500m	4*	NEPK$		58	2.6	10	30	100	20†	80m	110m				EB404b	PY513
13	65050-3HX-XC	500m	4*	NEPK$		48	3.0	10	30	100	20†	90m	110m				EB404b	PY513
14	65050-3HX-XD	500m	4*	NEPK$		26	3.0 †		30	100	20†	100m	130m				EB404b	PY513
15	65050-3HX-XM	500m	4*	NEPK$		26	4.5	5.5	30	100	10†	50m	80m				EB404b	PY513
16	65050-3HX-XQ	500m	4*	NEPK$		25	3.0 †		30	100	18†	90m	120m				EB404b	PY513
17	H5545-5	500m	4*	NEPV	28u†	16	3.0	15			20†	100m	160m	50k		FE	None	PY621a Δ
18	H5545-6	500m	4*	NEPV	30u†	28	4.0	15			20†	75m	75m	50k		FE	None	PY621a Δ
19	H5545G	.50	4*	NEPV	28u	15	3.0	15			20†	100m	120m	50k		FE	None	None
20	H5545M	.50	4*	NEPV	28u	29	3.0	15			20†	60m	100m	50k		FE	None	None
21	H5545X	.50	4*	NEPV	24u	25	9.0	15			20†	80m	40m	50k		FE	None	None
22	SX140-5	500m	4	NEPV	28u†	16	3.0	15			20†	100m	160m	50k			None	PY588 Δ
23	SX140G	.50	4	NEPV	28u	15	3.0	15			20†	100m	120m	50k			None	PY588 Δ
24	SX140M	.50	4	NEPV	28u	29	3.0	15			20†	60m	100m	50k			None	PY588 Δ
25	SX140X	.50	4	NEPV	24u	25	9.0	15			20†	80m	40m	50k			None	PY588 Δ
26	SX177-5	500m	4*	NEPV	28u†	16	3.0	15			20†	100m	160m	50k			None	PY621 Δ
27	SX177-6	500m	4*	NEPV	30u†	28	4.0	15			20†	75m	75m	50k			None	PY621 Δ
28	SX177G	.50	4*	NEPV	28u	15	3.0	15			20†	100m	120m	50k			None	PY621 Δ
29	SX177M	.50	4*	NEPV	28u	29	3.0	15			20†	60m	100m	50k			None	PY621 Δ
30	SX177X	.50	4*	NEPV	24u	25	9.0	15			20†	80m	40m	50k			None	PY621 Δ
31	SX440-5	.50	4	NEPV	28u	16	3.0	15			20†	100m	160m	50k			None	PY583 Δ
32	SX440G	.50	4	NEPV	28u	15	3.0	15			20†	100m	120m	50k			None	PY583 Δ
33	SX440M	.50	4	NEPV	28u	29	3.0	15			20†	60m	100m	50k			None	PY583 Δ
34	SX440X	.50	4	NEPV	24u	25	9.0	15			20†	80m	40m	50k			None	PY583 Δ
35	3624-25	500m	4	NH	1.0u†	08	4.0	15	30	100	20	100m	100m	50k	11	FE;9 Seg	None	None
36	739-52-1	.5	4	NHBK	20u†	18	3.0	20	20	300	20Ø	100m	100m*	50k	11	No Polarizer	EB404r	PY782 ⊠
37	739-52-2	.5	4	NHBK	20u†	18	3.0	20	20	300	20Ø	100m	100m*	50k	11	Rep; Texture	EB404r	PY782 ⊠
38	739-52-3	.5	4	NHBK	20u†	18	3.0	20	20	300	20Ø	100m	100m*	50k	11	Rep; Texture	EB404r	PY782 ⊠
39	739-52-4	.5	4	NHBK	20u†	18	3.0	20	20	300	20Ø	100m	100m*	50k	11	Trm	EB404r	PY782 ⊠
40	739-52-5	.5	4	NHBK	20u†	18	3.0	20	20	300	20Ø	100m	100m*	50k	11	Rep; Smooth	EB404r	PY782 ⊠
41	739-53-1	.5	4	NHBK	20u†	18	3.0	20	30	300	20Ø	100m	100m*	50k	11	No Polarizer	EB404s	PY782 ⊠
42	739-53-2	.5	4	NHBK	20u†	18	3.0	20	30	300	20Ø	100m	100m*	50k	11	Rep; Texture	EB404s	PY782 ⊠
43	739-53-3	.5	4	NHBK	20u†	18	3.0	20	30	300	20Ø	100m	100m*	50k	11	Trf	EB404s	PY782 ⊠
44	739-53-4	.5	4	NHBK	20u†	18	3.0	20	30	300	20Ø	100m	100m*	50k	11	Trm	EB404s	PY782 ⊠
45	739-53-5	.5	4	NHBK	20u†	18	3.0	20	30	300	20Ø	100m	100m*	50k	11	Ref; Smooth	EB404s	PY782 ⊠
46	739-54-1	.5	4	NHBK	20u†	18	3.0	20	30	300	20Ø	100	100 *	50k	11	No Polarizer	E404a	None
47	739-54-2	.5	4	NHBK	20u†	18	3.0	20	30	300	20Ø	100m	100m*	50k	11	Ref; Texture	E404a	PY782 ⊠
48	739-54-3	.5	4	NHBK	20u†	18	3.0	20	30	300	20Ø	100m	100m*	50k	11	Trf	E404a	PY782 ⊠
49	739-54-4	.5	4	NHBK	20u†	18	3.0	20	30	300	20Ø	100m	100m*	50k	11	Trm	E404a	PY782 ⊠
50	739-54-5	.5	4	NHBK	20u†	18	3.0	20	30	300	20Ø	100m	100m*	50k	11	Ref; Smooth	E404a	PY782 ⊠
51	737-1-1	500m	4	NK		15	2.7	15	30	120	20Ø	140m	74m*	30k	11	No Polarizer	EB364d	PY471 Δ
52	737-1-2	500m	4	NK		15	2.7	15	30	120	20Ø	140m	74m*	30k	11	Textured Ref	EB364d	PY471 Δ
53	737-1-3	500m	4	NK		15	2.7	15	30	120	20Ø	140m	74m*	30k	11	Trf	EB364d	PY471 Δ
54	737-1-4	500m	4	NK		15	2.7	15	30	120	20Ø	140m	74m*	30k	11	Trn	EB364d	PY471 Δ
55	737-1-5	500m	4	NK		15	2.7	15	30	120	20Ø	140m	74m*	30k	11	Smooth Ref	EB364d	PY471 Δ
56	739-4-1	500m	4	NK		15	3.0	15	30	300	20Ø	100m	100m*	30k	11	No Polarizer	E404a	PY470 Δ
57	739-4-2	500m	4	NK		15	3.0	20	30	300	20Ø	100m	100m*	30k	11	Textured Ref	E404a	PY470 Δ
58	739-4-3	500m	4	NK		15	3.0	20	30	300	20Ø	100m	100m*	30k	11	Trf	E404a	PY470 Δ
59	739-4-4	500m	4	NK		15	3.0	20	30	300	20Ø	100m	100m*	30k	11	Trn	E404a	PY470 Δ
60	739-4-5	500m	4	NK		15	3.0	20	30	300	20Ø	100m	100m*	30k	11	Smooth Ref	E404a	PY470 Δ
61	65050-4X-XA	500m	4*	NK $		58	2.6	10	30	100	20†	80m	110m				EB404c	PY514
62	65050-4X-XC	500m	4*	NK $		48	3.0	10	30	100	20†	90m	110m				EB404c	PY514
63	65050-4X-XD	500m	4*	NK $		26	3.0 †		30	100	20†	100m	130m				EB404c	PY514
64	65050-4X-XM	500m	4*	NK $		26	4.5	5.5	30	100	10†	50m	80m			Multiplex	EB99a	PY514
65	65050-4X-XQ	500m	4*	NK $		25	3.0 †		30	100	18†	90m	120m				EB404c	PY514
66	PCIM183	.50	4	NKL	0.6m	05	3.0	10	0	1.5M	20	100m	150m	50k	11	UPC Disp Mod	EC214ZY	PY1037
67	FE0202AEQ	.5	4	NKM		28		10 Δ	30	100	20	150m	600m	50k		Trf	None ♦	PY514
68	FE0202TFQ	.5	4	NKM		25		10 Δ	30	100	20	150m	600m	50k		Trn	None ♦	PY514
69	SX165-5	.50	4	NL	28u	16	3.0	15			20†	100m	160m	50k			None	PY711 Δ
70	SX165G	.50	4	NL	28u	15	3.0	15			20†	100m	120m	50k			None	PY711 Δ
71	SX165M	.50	4	NL	28u	29	3.0	15			20†	60m	100m	50k			None	PY711 Δ
72	SX165X	.50	4	NL	24u	25	9.0	15			20†	80m	40m	50k			None	PY711 Δ
73	101B1-11	.50	4	NLP		15	3.0	12	32	100		35m	65m	50k	11	Ref Rear Conn	E404b	PY720e
74	101B1-12	.50	4	NLP		15	3.0	12	32	100		35m	65m	50k	11	Trf Rear Conn	E404b	PY720e
75	101B1-13	.50	4	NLP		15	3.0	12	32	100		35m	65m	50k	11	Trn Rear Conn	E404b	PY720e
76	101B1-14	.50	4	NLP		15	3.0	12	32	100		35m	65m	50k	*	Trn Rear Conn	E404b	PY720e
77	101B1-26	.50	4	NLP		15	3.0	12	32	100		35m	65m	50k	11	Ref Rear Conn	E404b	PY720e
78	101B1-27	.50	4	NLP		15	3.0	12	32	100		35m	65m	50k	11	Trn Rear Conn	E404b	PY720e
79	101B1-31	.50	4	NLP		15	3.0	12	32	100		35m	65m	50k	2	Ref Rear Conn	E404b	PY720e
80	101B1-32	.50	4	NLP		15	3.0	12	32	100		35m	65m	50k	2	Trn Rear Conn	E404b	PY720e
81	101B1-41	.50	4	NLP		15	3.0	12	32	100		35m	65m	50k	6	Ref Rear Conn	E404b	PY720e
82	101B1-42	.50	4	NLP		15	3.0	12	32	100		35m	65m	50k	6	Trn Rear Conn	E404b	PY720e
83	101B1-51	.50	4	NLP		15	3.0	12	32	100		35m	65m	50k	5	Ref Rear Conn	E404b	PY720e
84	101B1-52	.50	4	NLP		15	3.0	12	32	100		35m	65m	50k	5	Trf Rear Conn	E404b	PY720e
85	101F3-52	.50	4	NLP		38	4.0	12	32	100		40m	60m	50k	5	Trf Frt Conn	E404b	PY720e
86	101B3-52	.50	4	NPL		38	4.0	12	32	100		40m	60m	50k	5	Trf Rear Conn	E404b	PY720e
87	PCIM176	.50	4	NPM	20m												None	PY1330
88	44D5R03H	500m	4	NR		15	3.0	12	30	60		80m	120m*			Ref	None ♦	PY1082a
89	44E3R03GH	500m	4	NR		48	4.0	15	30	60		20m	45m*			Ref	None ♦	PY1082a
90	44E5R03H	500m	4	NR		15	3.0	12	30	60		80m	120m*			Ref	None ♦	PY1082a
91	44E9R03GH	500m	4	NR		29	4.0	15	30	60		32m	55m*			Ref	None ♦	PY1082a
92	44R3R03GH	500m	4	NR		48	4.0	15	30	60		20m	45m*			Ref	None ♦	PY1082a
93	44R9R03GH	500m	4	NR		29	4.0	15	30	60		32m	55m*			Ref	None ♦	PY1082a
94	3901-01	.50	4	NR		57	3.0	9.0	30	100	20	30m	45m*	50k		FE	E404c	PY739
95	3901-05	.50	4	NR		15	3.0	9.0	30	100	20	75m	150m*	50k		FE	E404c	PY739
96	3901-06	.50	4	NR		19	4.5	13	30	100	20	45m	75m*	50k		FE	E404c	PY739
97	3922-01	.50	4	NR		57	3.0	9.0	30	100	20	30m	45m*	50k		FE	EB684a	PY746
98	3922-05	.50	4	NR		15	3.0	9.0	30	100	20	75m	150m*	50k		FE	EB684a	PY746
99	3922-06	.50	4	NR		19	4.5	13	30	100	20	45m	75m*	50k		FE	EB684a	PY746
100	3926-01	.50	4	NR		57	3.0	9.0	30	100	20	30m	45m*	50k		FE	EB404q	PY747
101	3926-05	.50	4	NR		15	3.0	9.0	30	100	20	75m	150m*	50k		FE	EB404q	PY747
102	3926-06	.50	4	NR		19	4.5	13	30	100	20	45m	75m*	50k		FE	EB404q	PY747
103	3935-01	.50	4	NR		57	3.0	9.0	30	100	20	30m	45m*	50k		FE	EB184a	PY749
104	3935-05	.50	4	NR		15	3.0	9.0	30	100	20	75m	150m*	50k		FE	EB184a	PY749
105	3935-06	.50	4	NR		19	4.5	13	30	100	20	45m	75m*	50k		FE	EB184a	PY749
106	4572-01	.50	4	NR		26§	3.0	15	30	100	20†	30m	100m	50k	95		EB664b	PY817 Δ
107	4572-05	.50	4	NR		15§	3.0	9.0	30	100	20†	75m	150m	50k	95		EB664b	PY817 Δ
108	4572-06	.50	4	NR		19§	4.0	13	30	100	20†	45m	75m	50k	95		EB664b	PY817 Δ
109	LTB1030HS	.50	4	NRK		26	3.5	8.0	30	100	18	60m	95m*			Trf	None ♦	PY514
110	LTB1030HW	.50	4	NRK		28	3.5	8.0	30	100	10	60m	95m*			Trf	None ♦	PY514

SYMBOLS AND CODES EXPLAINED IN INTERPRETER

36. LCD DISPLAYS - Seven-Segment Numeric (Cont'd)

IN ORDER OF FONT AND: (1) CHAR. HEIGHT (2) No CHAR. (3) PWR CONSUMP & (4)TYPE No.

LINE No.	4 TYPE NUMBER	1 CHAR. HGHT. (in)	2 NO. CHAR	NOMEN	3 MAX. PWR. CONS. Δ-/seg (W)	TEMP RNG. CODE - +	OPERATING VOLTAGE MIN. VOLT (V)	MAX. VOLT (V)	FREQ. MIN. (Hz)	FREQ. MAX. (Hz)	CONTRAST RATIO	RISE TIME tr (s)	DECAY TIME tf (s)	LIFE (hrs)	COL -OR	FEATURES	SCHE-MATIC	DRAWING
1	LTB1030RS	.50	4	NRK		26	3.5	8.0	30	100	18	60m	95m*			Ref	None ♦	PY514
2	LTB1030RW	.50	4	NRK		28	3.5	8.0	30	100	10	60m	95m*			Ref	None ♦	PY514
3	LTB1030TS	.50	4	NRK		26	3.5	8.0	30	100	18	60m	95m*			Trn	None ♦	PY514
4	LTB1030TW	.50	4	NRK		28	3.5	8.0	30	100	10	60m	95m*			Trn	None ♦	PY514
5	LTB1030XS	.50	4	NRK		26	3.5	8.0	30	100	18	60m	95m*			No polar	None ♦	PY514
6	LTB1030XW	.50	4	NRK		28	3.5	8.0	30	100	10	60m	95m*			No polar	None ♦	PY514
7	LTB1041HS	.50	4	NRK		26	3.5	8.0	30	100	18	60m	95m*			Trf	None ♦	PY514
8	LTB1041HW	.50	4	NRK		28	3.5	8.0	30	100	10	60m	95m*			Trf	None ♦	PY514
9	LTB1041RS	.50	4	NRK		26	3.5	8.0	30	100	18	60m	95m*			Ref	None ♦	PY514
10	LTB1041RW	.50	4	NRK		28	3.5	8.0	30	100	10	60m	95m*			Ref	None ♦	PY514
11	LTB1041TS	.50	4	NRK		26	3.5	8.0	30	100	18	60m	95m*			Trn	None ♦	PY514
12	LTB1041TW	.50	4	NRK		28	3.5	8.0	30	100	10	60m	95m*			Trn	None ♦	PY514
13	LTB1041XS	.50	4	NRK		26	3.5	8.0	30	100	18	60m	95m*			No polar	None ♦	PY514
14	LTB1041XW	.50	4	NRK		28	3.5	8.0	30	100	10	60m	95m*			No polar	None ♦	PY514
15	LTB1042HS	.50	4	NRK		26	3.5	8.0	30	100	18	60m	95m*			Trf	None ♦	PY514
16	LTB1042HW	.50	4	NRK		28	3.5	8.0	30	100	10	60m	95m*			Trf	None ♦	PY514
17	LTB1042RS	.50	4	NRK		26	3.5	8.0	30	100	18	60m	95m*			Ref	None ♦	PY514
18	LTB1042RW	.50	4	NRK		28	3.5	8.0	30	100	10	60m	95m*			Ref	None ♦	PY514
19	LTB1042TS	.50	4	NRK		26	3.5	8.0	30	100	18	60m	95m*			Trn	None ♦	PY514
20	LTB1042TW	.50	4	NRK		28	3.5	8.0	30	100	10	60m	95m*			Trn	None ♦	PY514
21	LTB1042XS	.50	4	NRK		26	3.5	8.0	30	100	18	60m	95m*			No polar	None ♦	PY514
22	LTB1042XW	.50	4	NRK		28	3.5	8.0	30	100	10	60m	95m*			No polar	None ♦	PY514
23	LTE1110XS	.50	4	NRK		26	3.5	8.0	30	100	18	60m	95m*			No polar	None ♦	PY514a
24	SX172-5	500m	4	NRK	28u†	16	3.0	15			20†	100m	160m	50k			None	PY514b Δ
25	SX172G	.50	4	NRK	28u	15	3.0	15			20†	100m	120m	50k			None	PY514b Δ
26	SX172M	.50	4	NRK	28u	29	3.0	15			20†	60m	100m	50k			None	PY514b Δ
27	SX172X	.50	4	NRK	24u	25	9.0	15			20†	80m	40m	50k			None	PY514b Δ
28	60D5R05H	500m	6	N		15	3.0	12	30	60		80m	120m*			Ref	None ♦	PY1087a
29	60E3R05GH	500m	6	N		48	4.0	15	30	60		20m	45m*			Ref	None ♦	PY1087a
30	60E5R05H	500m	6	N		15	3.0	12	30	60		80m	120m*			Ref	None ♦	PY1087a
31	60E9R05GH	500m	6	N		29	4.0	15	30	60		32m	55m*			Ref	None ♦	PY1087a
32	60R3R05GH	500m	6	N		48	4.0	15	30	60		20m	45m*			Ref	None ♦	PY1087a
33	60R9R05GH	500m	6	N		29	4.0	15	30	60		32m	55m*			Ref	None ♦	PY1087a
34	3626(1)	500m	6	N	1.0u†	06	4.5	15	30	100	20	100m	100m	50k	11	FE	None	None
35	740-56-2-1	.5	6	NBK	50u†	15	3.0	20	40	150	5.0Ø	85	95 *	50k	11	Ref; Smooth	EB526a	PY590
36	740-56-5-1	.5	6	NBK	50u†	15	3.0	20	40	150	5.0Ø	85	95 *	50k	11	Ref; Texture	EB526a	PY590
37	FE0401	500m	6	NBK	425u	15	3.0	17	30	100	20†	20m	95m	50k		Ref,Trn,Trf	None ♦	PY516 Δ
38	LC703060-301.15/1S	.5	6	NBK	25u†	16	3.0	6.0	30	200	20	40m	80m	100k	11	FE,Ref	None ♦	PY827
39	LC703060-301.28/1E	.5	6	NBK	17u†	28	3.0	6.0	30	200	20	40m	40m	100k	11	FE,Ref	None ♦	PY827
40	3918-110	500m	6	NC	150u†	05	4.0	17	30	100	20†	75m	150m*	50k	11	Trn	E506b	PY516a Δ
41	3918-210	500m	6	NC	150u†	05	4.0	17	30	100	20†	75m	150m*	50k		FE.Trn	E506b	PY516a
42	3918-312	500m	6	NC	150u†	05	4.0	17	30	100	20†	75m	150m*	50k	11	FE,Trf	E506b	PY516a
43	3918-313	500m	6	NC	150u†	05	4.0	17	30	100	20†	75m	150m*	50k	11	FE,Ref	E506b	PY516a
44	SX135-5	500m	6	NC	28u†	16	3.0	15			20†	100m	160m	50k			None	PY590 Δ
45	SX135-6	500m	6	NC	30u†	28	4.0	15			20†	75m	75m	50k			None	PY590 Δ
46	SX135G	.50	6	NC	28u	15	3.0	15			20†	100m	120m	50k			None	PY590 Δ
47	SX135M	.50	6	NC	28u	29	3.0	15			20†	60m	100m	50k			None	PY590 Δ
48	SX135X	.50	6	NC	24u	25	9.0	15			20†	80m	40m	50k			None	PY590 Δ
49	H5560G	.50	6	NEP	28u	15	3.0	15			20†	100m	120m	50k		FE	None	PY620 Δ
50	H5560M	.50	6	NEP	28u	29	3.0	15			20†	60m	100m	50k		FE	None	PY620 Δ
51	H5560X	.50	6	NEP	24u	25	9.0	15			20†	80m	40m	50k		FE	None	PY620 Δ
52	K5560-5	500m	6	NEP	28u†	16	3.0	15			20†	100m	160m	50k		FE	None	PY620 Δ
53	K5560-6	500m	6	NEP	30u†	28	4.0	15			20†	75m	75m	50k		FE	None	PY620 Δ
54	65050-6X-XA	500m	6	NK $		58	2.6	10	30	100	20†	80m	110m				EB506a	PY516c
55	65050-6X-XC	500m	6	NK $		48	3.0	10	30	100	20†	90m	110m				EB506a	PY516c
56	65050-6X-XD	500m	6	NK $		26	3.0 †		30	100	20†	100m	130m				EB506a	PY516c
57	65050-6X-XM	500m	6	NK $		26	4.5	5.5	30	100	10†	50m	80m				EB506a	PY516c
58	65050-6X-XQ	500m	6	NK $		25	3.0 †		30	100	18†	90m	120m				EB506a	PY516c
59	FE1001	.50	8	FE		05	3.0	5.5	30	35	20†	15m	60m	50k	11	FE 7D.P.	EB688a	PY717
60	3682	500m	8	N	700n†	06	5.0	15	30	100	20	100m	100m	30k	11	FE	None	None
61	742-58-2-1	.5	8	NBK	50u†	15	3.0	20	40	150	5.0Ø	85	95 *	50k	11	Ref;Smooth	EB688a	None
62	742-58-5-1	.5	8	NBK	50u†	15	3.0	20	40	150	5.0Ø	85	95 *	50k	11	Ref;Texture	EB688a	None
63	LC943080-301.15/1S	.5	8	NBK	37u†	16	3.0	6.0	30	200	20	40m	80m	100k	11	FE,Ref	None ♦	PY823
64	LC943080-301.27/1E	.5	8	NBK	22u†	28	3.0	6.0	30	200	20	40m	40m	100k	11	FE,Trf	None ♦	PY823
65	LC943080-301.28/1E	.5	8	NBK	22u†	28	3.0	6.0	30	200	20	40m	40m	100k	11	FE,Ref	None ♦	PY823
66	LCD445-11	.50	8	NEKC		04	3.1 †				7†	80m	60m				None	PY1565
67	P5580-5	500m	8	NEP	28u†	16	3.0	15			20†	100m	160m	50k		FE	None	PY592a Δ
68	P5580-6	500m	8	NEP	30u†	28	4.0	15			20†	75m	75m	50k		FE	None	PY592a Δ
69	P5580G	.50	8	NEP	28u	15	3.0	15			20†	100m	120m	50k		FE	None	PY592a Δ
70	P5580M	.50	8	NEP	28u	29	3.0	15			20†	60m	100m	50k		FE	None	PY592a Δ
71	P5580X	.50	8	NEP	24u	25	9.0	15			20†	80m	40m	50k		FE	None	PY592a Δ
72	65050-8X-XA	500m	8	NK $		58	2.6	10	30	100	20†	80m	110m				EB688b	PY1243
73	65050-8X-XC	500m	8	NK $		48	3.0	10	30	100	20†	90m	110m				EB688b	PY1243
74	65050-8X-XD	500m	8	NK $		26	3.0 †		30	100	20†	100m	130m				EB688b	PY1243
75	65050-8X-XM	500m	8	NK $		26	4.5	5.5	30	100	10†	50m	80m				EB688b	PY1243
76	65050-8X-XQ	500m	8	NK $		25	3.0 †		30	100	18†	90m	120m				EB688b	PY1243
77	69D3R09H	500m	8	NR		48	4.0	15	30	60		20m	45m*			Ref	None ♦	PY1096
78	69D8R09H	500m	8	NR		26	3.0	12	30	60		32m	91m*			Ref	None ♦	PY1096
79	69E3R09GH	500m	8	NR		48	4.0	15	30	60		20m	45m*			Ref	None ♦	PY1096
80	69E3R09H	500m	8	NR		48	4.0	15	30	60		20m	45m*			Ref	None ♦	PY1096
81	69E8R09H	500m	8	NR		26	3.0	12	30	60		32m	91m*			Ref	None ♦	PY1096
82	69R3R09GH	500m	8	NR		48	4.0	15	30	60		20m	45m*			Ref	None ♦	PY1096
83	65D5R09H	500m	8	NRK		15	3.0	12	30	60		80m	120m*			Ref	None ♦	PY1088
84	65E3R09GH	500m	8	NRK		48	4.0	15	30	60		20m	45m*			Ref	None ♦	PY1088
85	65E5R09H	500m	8	NRK		15	3.0	12	30	60		80m	120m*			Ref	None ♦	PY1088
86	65E9R09GH	500m	8	NRK		29	4.0	15	30	60		32m	55m*			Ref	None ♦	PY1088
87	65R3R09GH	500m	8	NRK		48	4.0	15	30	60		20m	45m*			Ref	None ♦	PY1088
88	65R9R09GH	500m	8	NRK		29	4.0	15	30	60		32m	55m*			Ref	None ♦	PY1088
89	LTE1361HS	.50	8	NRK		26	3.5	8.0	30	100	18	60m	95m*			Trf	None ♦	PY405
90	LTE1361HW	.50	8	NRK		28	3.5	8.0	30	100	10	60m	95m*			Trf	None ♦	PY405
91	LTE1361RS	.50	8	NRK		26	3.5	8.0	30	100	18	60m	95m*			Ref	None ♦	PY405
92	LTE1361RW	.50	8	NRK		28	3.5	8.0	30	100	10	60m	95m*			Ref	None ♦	PY405
93	LTE1361TS	.50	8	NRK		26	3.5	8.0	30	100	18	60m	95m*			Trn	None ♦	PY405
94	LTE1361TW	.50	8	NRK		28	3.5	8.0	30	100	10	60m	95m*			Trn	None ♦	PY405
95	LTE1361XS	.50	8	NRK		26	3.5	8.0	30	100	18	60m	95m*			No polar	None ♦	PY405
96	LTE1361XW	.50	8	NRK		28	3.5	8.0	30	100	10	60m	95m*			No polar	None ♦	PY405
97	LTE1460HS	.50	8	NRK		26	3.5	8.0	30	100	18	60m	95m*			Trf	None ♦	PY405 Δ
98	LTE1460HW	.50	8	NRK		28	3.5	8.0	30	100	10	60m	95m*			Trf	None ♦	PY405 Δ
99	LTE1460RS	.50	8	NRK		26	3.5	8.0	30	100	18	60m	95m*			Ref	None ♦	PY405 Δ
100	LTE1460RW	.50	8	NRK		28	3.5	8.0	30	100	10	60m	95m*			Ref	None ♦	PY405 Δ
101	LTE1460TS	.50	8	NRK		26	3.5	8.0	30	100	18	60m	95m*			Trn	None ♦	PY405 Δ
102	LTE1460TW	.50	8	NRK		28	3.5	8.0	30	100	10	60m	95m*			Trn	None ♦	PY405 Δ
103	LTE1460XS	.50	8	NRK		26	3.5	8.0	30	100	18	60m	95m*			No polar	None ♦	PY405 Δ
104	LTE1460XW	.50	8	NRK		28	3.5	8.0	30	100	10	60m	95m*			No polar	None ♦	PY405 Δ
105	SX180-5	.50	8	NRK	28u	16	3.0	15			20†	100m	160m	50k			None	PY717 Δ

SYMBOLS AND CODES EXPLAINED IN INTERPRETER

36. LCD DISPLAYS - Seven-Segment Numeric (Cont'd)

IN ORDER OF FONT AND: (1) CHAR. HEIGHT (2) No CHAR. (3) PWR CONSUMP & (4)TYPE No.

LINE No.	[4] TYPE NUMBER	[1] CHAR. HGHT. (in)	[2] NO. CHAR	NOMEN	[3] MAX. PWR. CONS. Δ-/seg (W)	TEMP RNG. CODE - +	OPERATING VOLTAGE MIN. VOLT (V)	MAX. VOLT (V)	FREQ. MIN. (Hz)	FREQ. MAX. (Hz)	CONTRAST RATIO	RISE TIME tr (s)	DECAY TIME tf (s)	LIFE (hrs)	COL -OR	FEATURES	SCHE-MATIC	DRAWING
1	SX180G	.50	8	NRK	28u	15	3.0	15			20†	100m	120m	50k			None	PY717 Δ
2	SX180M	.50	8	NRK	28u	29	3.0	15			20†	60m	100m	50k			None	PY717 Δ
3	SX180X	.50	8	NRK	24u	25	9.0	15			20†	80m	40m	50k			None	PY717 Δ
4	131F01AA	.5	8	NRKM		15	3 Δ	12 Δ		32 †					11	Ref	None ♦	PY1546
5	131F01AB	.5	8	NRKM		15	3 Δ	12 Δ		32 †					11	Trf	None ♦	PY1546
6	131F01AC	.5	8	NRKM		15	3 Δ	12 Δ		32 †					11	Trf	None ♦	PY1546
7	131F01AD	.5	8	NRKM		15	3 Δ	12 Δ		32 †					*	Trf	None ♦	PY1546
8	131F03BF	.5	8	NRKM		38	4 Δ	12 Δ		32 †					11	Ref	None ♦	PY1546
9	131F03BG	.5	8	NRKM		38	4 Δ	12 Δ		32 †					11	Trf	None ♦	PY1546
10	131F03BH	.5	8	NRKM		38	4 Δ	12 Δ		32 †					11	Trf	None ♦	PY1546
11	131F03BK	.5	8	NRKM		38	4 Δ	12 Δ		32 †					*	Trf	None ♦	PY1546
12	131N01AA	.5	8	NRKM		15	3 Δ	12 Δ		32 †					11	Ref	None ♦	PY1546
13	131N01AB	.5	8	NRKM		15	3 Δ	12 Δ		32 †					11	Trf	None ♦	PY1546
14	131N01AC	.5	8	NRKM		15	3 Δ	12 Δ		32 †					11	Trf	None ♦	PY1546
15	131N01AD	.5	8	NRKM		15	3 Δ	12 Δ		32 †					*	Trf	None ♦	PY1546
16	131N03BF	.5	8	NRKM		38	4 Δ	12 Δ		32 †					11	Ref	None ♦	PY1546
17	131N03BG	.5	8	NRKM		38	4 Δ	12 Δ		32 †					11	Trf	None ♦	PY1546
18	131N03BH	.5	8	NRKM		38	4 Δ	12 Δ		32 †					11	Trf	None ♦	PY1546
19	131N03BK	.5	8	NRKM		38	4 Δ	12 Δ		32 †					*	Trf	None ♦	PY1546
20	36316	500m	16	N	1.0u†	08	4.5	15	30	100	20	120m	150m	30k	11	FE;Edge Conn	None	None
21	FXS4096	512m	4*	NEC		55		3.0 †	30	500		50m	70m	50k	11 %		None	PY1280
22	FXS4120	512m	4*	NEC		55		3.0 †	30	500		50m	70m	50k	11 %		None	PY1286
23	FRS1117P	512m	4	NEM		55		3.1 †				50m	70m	50k	11 %	Pin Conn	None	PY586b
24	FRS1200	512m	4	NEM		55		3.1 †				50m	70m	50k	11 %	Rubber Conn	None	PY583a
25	FRS1080P	512m	4	NM		55		3.1 †				50m	70m	50k	11 %	Pin Conn	None	PY514j
26	FRS1105P	512m	4	NM		55		3.1 †				50m	70m	50k	11 %	Pin Conn	None	PY583b
27	FRS1154P	512m	6	NCM		55		3.1 †				50m	70m	50k	11 %	Pin Conn	None	PY590c
28	FRS1412P	512m	8	NM		55		3.1 †				50m	70m	50k	11 %	Pin Conn	None	PY1308
29	RCL1	.55	4	NKC		38	5.5	16						5.0k		Grn Backgrnd	None ♦	PY1329
30	109F07AA	571m	8	N		15	1.9					35m	80m		11 %	Reflective	EB248ZZ	PY909
31	109F07AB	571m	8	N		15	1.9					35m	80m		11 %	Transflective	EB248ZZ	PY909
32	109F07AC	571m	8	N		15	1.9					35m	80m		11 %	Transmissive	EB248ZZ	PY909
33	109F07AD	571m	8	N		15	1.9					35m	80m		11 %	Transmissive	EB248ZZ	PY909
34	FRS4188	591m	4*	NEC		55		3.0 †	30	500		50m	70m	50k	11 %		None	PY1290
35	FXS4073	591m	4	NEC		55		3.0 †	30	500		50m	70m	50k	11 %		None	PY1270
36	L563A5	600m	3*	NC	28u†	16	3.0	15			20†	100m	160m	50k		12 hr AM/PM	None	PY591a Δ
37	L563A6	600m	3*	NC	30u†	28	4.0	15			20†	75m	75m	50k		12 hr AM/PM	None	PY591a Δ
38	L5635-5	600m	3*	NEPV	28u†	16	3.0	15			20†	100m	160m	50k		FE	None	PY588a Δ
39	L5635-6	600m	3*	NEPV	30u†	28	4.0	15			20†	75m	75m	50k		FE	None	PY588a Δ
40	L5635G	.60	3*	NEPV	28u	15	3.0	15			20†	100m	120m	50k		FE	None	PY588a Δ
41	L5635M	.60	3*	NEPV	28u	29	3.0	15			20†	60m	100m	50k		FE	None	PY588a Δ
42	L5635X	.60	3*	NEPV	24u	25	9.0	15			20†	80m	40m	50k		FE	None	PY588a Δ
43	L564C5	600m	4	NC	28u†	26	3.0	15			20†	50m	50m	50k		24 hr Clock	None	PY514d Δ
44	L564C6	600m	4	NC	30u†	28	4.0	15			20†	75m	75m	50k		24 hr Clock	None	PY514d Δ
45	55D5R08H	600m	4*	NEM		15	3.0	12	30	60		80m	120m*			Ref	None ♦	PY1083c
46	55E3R08GH	600m	4*	NEM		48	4.0	15	30	60		20m	45m*			Ref	None ♦	PY1083c
47	55E5R08H	600m	4*	NEM		15	3.0	12	30	60		80m	120m*			Ref	None ♦	PY1083c
48	55E9R08GH	600m	4*	NEM		29	4.0	15	30	60		32m	55m*			Ref	None ♦	PY1083c
49	55R3R08GH	600m	4*	NEM		48	4.0	15	30	60		20m	45m*			Ref	None ♦	PY1083c
50	55R9R08GH	600m	4*	NEM		29	4.0	15	30	60		32m	55m*			Ref	None ♦	PY1083c
51	L5640-5	600m	4	NEP	28u†	16	3.0	15			20†	100m	160m	50k		FE	None	PY589b Δ
52	L5640-6	600m	4	NEP	30u†	28	4.0	15			20†	75m	75m	50k		FE	None	PY589b Δ
53	L5640G	.60	4	NEP	28u	15	3.0	15			20†	100m	120m	50k		FE	None	PY589b Δ
54	L5640M	.60	4	NEP	28u	29	3.0	15			20†	60m	100m	50k		FE	None	PY589b Δ
55	L5640X	.60	4	NEP	24u	25	9.0	15			20†	80m	40m	50k		FE	None	PY589b Δ
56	SX406-5	.60	4	NEP	28u	16	3.0	15			20†	100m	160m	50k			None	PY1093 Δ
57	SX406G	.60	4	NEP	28u	15	3.0	15			20†	100m	120m	50k			None	PY1093 Δ
58	SX406M	.60	4	NEP	28u	29	3.0	15			20†	60m	100m	50k			None	PY1093 Δ
59	SX406X	.60	4	NEP	24u	25	9.0	15			20†	80m	40m	50k			None	PY1093 Δ
60	LCD431-01	.60	7	NEKC		38	3.0 †				10†	20m	60m				None	PY1571b
61	LCD414-01	.60	8	NEKC		38	3.0 †				10†	20m	60m				None	PY1557a
62	LCD446-11	.63	8	NEKC		04	3.1 †				7†	80m	60m				None	PY1565a
63	3627	650m	6	N	3.0u†	06	4.0	15	30	100	20	120m	120m	50k	11	FE;No DC	None	None
64	28D5R24H	700m	2	NL		15	3.0	12	30	60		80m	120m*			Ref	None ♦	PY1079a
65	28E3R24GH	700m	2	NL		48	4.0	15	30	60		20m	45m*			Ref	None ♦	PY1079a
66	28E5R24H	700m	2	NL		15	3.0	12	30	60		80m	120m*			Ref	None ♦	PY1079a
67	28E9R24GH	700m	2	NL		29	4.0	15	30	60		32m	55m*			Ref	None ♦	PY1079a
68	28R3R24GH	700m	2	NL		48	4.0	15	30	60		20m	45m*			Ref	None ♦	PY1079a
69	28R9R24GH	700m	2	NL		29	4.0	15	30	60		32m	55m*			Ref	None ♦	PY1079a
70	3703(2)	700m	3	N	1.0u†	06	4.0	15	30	100	20	100m	100m	30k	11	FE	None	None
71	FE0501	700m	3*	NBEV		15	3.0	10	30	100	20†	30m	120m	50k		Ref,Trn,Trf	None	PY586 Δ
72	3927-110	700m	3*	NC	150u†	05	4.0	17	30	100	20†	75m	150m*	50k	11	Trn	EB404k	PY748 Δ
73	3927-210	700m	3*	NC	150u†	05	4.0	17	30	100	20†	75m	150m*	50k		FE,Trn	EB404k	PY748
74	3927-312	700m	3*	NC	150u†	05	4.0	17	30	100	20†	75m	150m*	50k	11	FE,Trf	EB404k	PY748
75	3927-313	700m	3*	NC	150u†	05	4.0	17	30	100	20†	75m	150m*	50k	11	FE,Ref	EB404k	PY748
76	51D5R08H	700m	3*	NEM		15	3.0	12	30	60		80m	120m*			Ref	None ♦	PY1081c
77	51E3R08GH	700m	3*	NEM		48	4.0	15	30	60		20m	45m*			Ref	None ♦	PY1081c
78	51E5R08H	700m	3*	NEM		15	3.0	12	30	60		80m	120m*			Ref	None ♦	PY1081c
79	51E9R08GH	700m	3*	NEM		29	4.0	15	30	60		32m	55m*			Ref	None ♦	PY1081c
80	51R3R08GH	700m	3*	NEM		48	4.0	15	30	60		20m	45m*			Ref	None ♦	PY1081c
81	51R9R08GH	700m	3*	NEM		29	4.0	15	30	60		32m	55m*			Ref	None ♦	PY1081c
82	53D5R08H	700m	3*	NEM		15	3.0	12	30	60		80m	120m*			Ref	None ♦	PY1081d
83	53E3R08GH	700m	3*	NEM		48	4.0	15	30	60		20m	45m*			Ref	None ♦	PY1081d
84	53E5R08H	700m	3*	NEM		15	3.0	12	30	60		80m	120m*			Ref	None ♦	PY1081d
85	53E9R08GH	700m	3*	NEM		29	4.0	15	30	60		32m	55m*			Ref	None ♦	PY1081d
86	53R3R08GH	700m	3*	NEM		48	4.0	15	30	60		20m	45m*			Ref	None ♦	PY1081d
87	53R9R08GH	700m	3*	NEM		29	4.0	15	30	60		32m	55m*			Ref	None ♦	PY1081d
88	SX162-5	.70	3*	NEPV	28u†	16	3.0	15			20†	100m	160m	50k			None	PY588d Δ
89	SX162G	.70	3*	NEPV	28u	15	3.0	15			20†	100m	120m	50k			None	PY588d Δ
90	SX162M	.70	3*	NEPV	28u	29	3.0	15			20†	60m	100m	50k			None	PY588d Δ
91	SX162X	.70	3*	NEPV	24u	25	9.0	15			20†	80m	40m	50k			None	PY588d Δ
92	58D5R79H	700m	3	NL		15	3.0	12	30	60		80m	120m*			Ref	None ♦	PY1080a
93	58E3R79GH	700m	3	NL		48	4.0	15	30	60		20m	45m*			Ref	None ♦	PY1080a
94	58E5R79H	700m	3	NL		15	3.0	12	30	60		80m	120m*			Ref	None ♦	PY1080a
95	58E9R79GH	700m	3	NL		29	4.0	15	30	60		32m	55m*			Ref	None ♦	PY1080a
96	58R3R79GH	700m	3	NL		48	4.0	15	30	60		20m	45m*			Ref	None ♦	PY1080a
97	58R9R79GH	700m	3	NL		29	4.0	15	30	60		32m	55m*			Ref	None ♦	PY1080a
98	3940-01	.70	3	NRV		26§	3.0	15	30	100	20†	30m	100m	50k	95		EB243a	PY815 Δ
99	FE0501ATIR	.7	4	FEM		28		10 Δ	30	100	20	150m	600m	50k	2	Ref	None ♦	PY740
100	FE0501EB	.7	4	FEM		25		10 Δ	30	100	20	150m	600m	50k	6	Trf	None ♦	PY740
101	101B01AA	.7	4*	N		15	3.0 Δ	12 Δ		32 †					11 %	Reflective	E404b	PY739 ⊠
102	101B01AB	.7	4*	N		15	3.0 Δ	12 Δ		32 †					11 %	Transflective	E404b	PY739 ⊠
103	101B01AC	.7	4*	N		15	3.0 Δ	12 Δ		32 †					11 %	Transmissive	E404b	PY739 ⊠
104	101B01AD	.7	4*	N		15	3.0 Δ	12 Δ		32 †					11 %	Transmissive	E404b	PY739 ⊠
105	101B01BF	.7	4*	N		15	3.0 Δ	12 Δ		32 †					11 %	Reflective	E404b	PY739 ⊠
106	101B01BG	.7	4*	N		15	3.0 Δ	12 Δ		32 †					11 %	transflective	E404b	PY739 ⊠
107	101B01BH	.7	4*	N		15	3.0 Δ	12 Δ		32 †					11 %	transmissive	E404b	PY739 ⊠
108	101B01BK	.7	4*	N		15	3.0 Δ	12 Δ		32 †					11 %	transmissive	E404b	PY739 ⊠
109	101B03AA	.7	4*	N		38	4.0 Δ	12 Δ		32 †					11 %	Reflectiveve	E404b	PY739 ⊠
110	101B03AB	.7	4*	N		38	4.0 Δ	12 Δ		32 †					11 %	Transflective	E404b	PY739 ⊠

SYMBOLS AND CODES EXPLAINED IN INTERPRETER

36. LCD DISPLAYS - Seven-Segment Numeric (Cont'd)

IN ORDER OF FONT AND: (1) CHAR. HEIGHT (2) No CHAR. (3) PWR CONSUMP & (4)TYPE No.

LINE No.	4 TYPE NUMBER	1 CHAR. HGHT. (in)	2 NO. CHAR	NOMEN	3 MAX. PWR. CONS. Δ-/seg (W)	TEMP RNG. CODE - +	OPERATING VOLTAGE MIN. VOLT (V)	MAX. VOLT (V)	FREQ. MIN. (Hz)	FREQ. MAX. (Hz)	CONTRAST RATIO	RISE TIME tr (s)	DECAY TIME tf (s)	LIFE (hrs)	COL -OR	FEATURES	SCHE-MATIC	DRAWING
1	101B03AC	.7	4*	N		38	4.0 Δ	12 Δ		32 †					11 %	Transmissive	E404b	PY739 ☑
2	101B03AD	.7	4*	N		38	4.0 Δ	12 Δ		32 †					11 %	Transmissive	E404b	PY739 ☑
3	101B03BF	.7	4*	N		38	4.0 Δ	12 Δ		32 †					11 %	Reflective	E404b	PY739 ☑
4	101B03BG	.7	4*	N		38	4.0 Δ	12 Δ		32 †					11 %	Transflective	E404b	PY739 ☑
5	101B03BH	.7	4*	N		38	4.0 Δ	12 Δ		32 †					11 %	Transmissive	E404b	PY739 ☑
6	101B03BK	.7	4*	N		38	4.0 Δ	12 Δ		32 †					11 %	Transmissive	E404b	PY739 ☑
7	101F01AA	.7	4*	N		15	3.0 Δ	12 Δ		32 †					11 %	Reflective	E404b	PY739 ☑
8	101F01AB	.7	4*	N		15	3.0 Δ	12 Δ		32 †					11 %	Transflective	E404b	PY739 ☑
9	101F01AC	.7	4*	N		15	3.0 Δ	12 Δ		32 †					11 %	Transmissive	E404b	PY739 ☑
10	101F01AD	.7	4*	N		15	3.0 Δ	12 Δ		32 †					11 %	Transmissive	E404b	PY739 ☑
11	101F01BF	.7	4*	N		15	3.0 Δ	12 Δ		32 †					11 %	Reflective	E404b	PY739 ☑
12	101F01BG	.7	4*	N		15	3.0 Δ	12 Δ		32 †					11 %	Transflective	E404b	PY739 ☑
13	101F01BH	.7	4*	N		15	3.0 Δ	12 Δ		32 †					11 %	Transmissive	E404b	PY739 ☑
14	101F01BK	.7	4*	N		15	3.0 Δ	12 Δ		32 †					11 %	Transmissive	E404b	PY739 ☑
15	101F03AA	.7	4*	N		38	3.0 Δ	12 Δ		32 †					11 %	Reflective	E404b	PY739 ☑
16	101F03AB	.7	4*	N		38	3.0 Δ	12 Δ		32 †					11 %	Transflective	E404b	PY739 ☑
17	101F03AC	.7	4*	N		38	4.0 Δ	12 Δ		32 †					11 %	transmissive	E404b	PY739 ☑
18	101F03AD	.7	4*	N		38	4.0 Δ	12 Δ		32 †					11 %	transmissive	E404b	PY739 ☑
19	101F03BF	.7	4*	N		38	4.0 Δ	12 Δ		32 †					11 %	reflective	E404b	PY739 ☑
20	101F03BG	.7	4*	N		38	4.0 Δ	12 Δ		32 †					11 %	transflective	E404b	PY739 ☑
21	101F03BH	.7	4*	N		38	4.0 Δ	12 Δ		32 †					11 %	transmissive	E404b	PY739 ☑
22	101F03BK	.7	4*	N		38	4.0 Δ	12 Δ		32 †					11 %	transmissive	E404b	PY739 ☑
23	102F01AA	.7	4	N		15	3.0 Δ	12 Δ		32 †					11 %	Reflective	E404a	PY514 ☑
24	102F01AB	.7	4	N		15	3.0 Δ	12 Δ		32 †					11 %	Transflective	E404a	PY514 ☑
25	102F01AC	.7	4	N		15	3.0 Δ	12 Δ		32 †					11 %	Transmissive	E404a	PY514 ☑
26	102F01AD	.7	4	N		15	3.0 Δ	12 Δ		32 †					11 %	Transmissive	E404a	PY514 ☑
27	102F01BF	.7	4	N		15	3.0 Δ	12 Δ		32 †					11 %	Reflective	E404a	PY514 ☑
28	102F01BG	.7	4	N		15	3.0 Δ	12 Δ		32 †					11 %	Transflective	E404a	PY514 ☑
29	102F01BH	.7	4	N		15	3.0 Δ	12 Δ		32 †					11 %	Transmissive	E404a	PY514 ☑
30	102F01BK	.7	4	N		15	3.0 Δ	12 Δ		32 †					11 %	Transmissive	E404a	PY514 ☑
31	102F03AA	.7	4	N		38	4.0 Δ	12 Δ		32 †					11 %	Reflective	E404a	PY514 ☑
32	102F03AB	.7	4	N		38	4.0 Δ	12 Δ		32 †					11 %	Transflective	E404a	PY514 ☑
33	102F03AC	.7	4	N		38	4.0 Δ	12 Δ		32 †					11 %	Transmissive	E404a	PY514 ☑
34	102F03AD	.7	4	N		38	4.0 Δ	12 Δ		32 †					11 %	Transmissive	E404a	PY514 ☑
35	102F03BF	.7	4	N		38	4.0 Δ	12 Δ		32 †					11 %	Reflective	E404a	PY514 ☑
36	102F03BG	.7	4	N		38	4.0 Δ	12 Δ		32 †					11 %	Transflective	E404a	PY514 ☑
37	102F03BH	.7	4	N		38	4.0 Δ	12 Δ		32 †					11 %	Transmissive	E404a	PY514 ☑
38	102F03BK	.7	4	N		38	4.0 Δ	12 Δ		32 †					11 %	Transmissive	E404a	PY514 ☑
39	108B01AA	.7	4*	N		15	3.0 Δ	12 Δ		32 †					11 %	Reflective	E404c	PY901
40	108B01AB	.7	4*	N		15	3.0 Δ	12 Δ		32 †					11 %	Transflective	E404c	PY901
41	108B01AC	.7	4*	N		15	3.0 Δ	12 Δ		32 †					11 %	Transmissive	E404c	PY901
42	108B01AD	.7	4*	N		15	3.0 Δ	12 Δ		32 †					11 %	Transmissive	E404c	PY901
43	108B01BF	.7	4*	N		15	3.0 Δ	12 Δ		32 †					11 %	Reflective	E404c	PY901
44	108B01BG	.7	4*	N		15	3.0 Δ	12 Δ		32 †					11 %	Transflective	E404c	PY901
45	108B01BH	.7	4*	N		15	3.0 Δ	12 Δ		32 †					11 %	Transmissive	E404c	PY901
46	108B01BK	.7	4*	N		15	3.0 Δ	12 Δ		32 †					11 %	Transmissive	E404c	PY901
47	108B03AA	.7	4*	N		38	4.0 Δ	12 Δ		32 †					11 %	Reflective	E404c	PY901
48	108B03AB	.7	4*	N		38	4.0 Δ	12 Δ		32 †					11 %	Transflective	E404c	PY901
49	108B03AC	.7	4*	N		38	4.0 Δ	12 Δ		32 †					11 %	Transmissive	E404c	PY901
50	108B03AD	.7	4*	N		38	4.0 Δ	12 Δ		32 †					11 %	Transmissive	E404c	PY901
51	108B03BF	.7	4*	N		38	4.0 Δ	12 Δ		32 †					11 %	Reflective	E404c	PY901
52	108B03BG	.7	4*	N		38	4.0 Δ	12 Δ		32 †					11 %	Transflective	E404c	PY901
53	108B03BH	.7	4*	N		38	4.0 Δ	12 Δ		32 †					11 %	Transmissive	E404c	PY901
54	108B03BK	.7	4*	N		38	4.0 Δ	12 Δ		32 †					11 %	Transmissive	E404c	PY901
55	108F01AA	.7	4*	N		15	3.0 Δ	12 Δ		32 †					11 %	Reflective	E404c	PY901
56	108F01AB	.7	4*	N		15	3.0 Δ	12 Δ		32 †					11 %	Transflective	E404c	PY901
57	108F01AC	.7	4*	N		15	3.0 Δ	12 Δ		32 †					11 %	Transmissive	E404c	PY901
58	108F01AD	.7	4*	N		15	3.0 Δ	12 Δ		32 †					11 %	Transmissive	E404c	PY901
59	108F01BF	.7	4*	N		15	3.0 Δ	12 Δ		32 †					11 %	Reflective	E404c	PY901
60	108F01BG	.7	4*	N		15	3.0 Δ	12 Δ		32 †					11 %	Transflective	E404c	PY901
61	108F01BH	.7	4*	N		15	3.0 Δ	12 Δ		32 †					11 %	Transmissive	E404c	PY901
62	108F01BK	.7	4*	N		15	3.0 Δ	12 Δ		32 †					11 %	Transmissive	E404c	PY901
63	108F03AA	.7	4*	N		38	4.0 Δ	12 Δ		32 †					11 %	Reflective	E404c	PY901 ☑
64	108F03AB	.7	4*	N		38	4.0 Δ	12 Δ		32 †					11 %	Transflective	E404c	PY901 ☑
65	108F03AC	.7	4*	N		38	4.0 Δ	12 Δ		32 †					11 %	Transmissive	E404c	PY901 ☑
66	108F03AD	.7	4*	N		38	4.0 Δ	12 Δ		32 †					11 %	Transmissive	E404c	PY901
67	108F03BF	.7	4*	N		38	4.0 Δ	12 Δ		32 †					11 %	Reflective	E404c	PY901
68	108F03BG	.7	4*	N		38	4.0 Δ	12 Δ		32 †					11 %	Transflective	E404c	PY901
69	108F03BH	.7	4*	N		38	4.0 Δ	12 Δ		32 †					11 %	Transmissive	E404c	PY901
70	108F03BK	.7	4*	N		38	4.0 Δ	12 Δ		32 †					11 %	Transmissive	E404c	PY901
71	SX181-5	.70	4	N	28u†	16	3.0	15			20†	100m	160m	50k			None	PY514c Δ
72	SX181-6	700m	4	N	30u†	28	4.0	15			20†	75m	75m	50k			None	PY514c Δ
73	SX181G	.70	4	N	28u	15	3.0	15			20†	100m	120m	50k			None	PY514c Δ
74	SX181M	.70	4	N	28u	29	3.0	15			20†	60m	100m	50k			None	PY514c Δ
75	SX181X	.70	4	N	24u	25	9.0	15			20†	80m	40m	50k			None	PY514c Δ
76	LC703831-300.15/1S	.7	4	NBEKP	29u†	16	3.0	6.0	30	200	20	40m	80m	100k	11	Std. Ref. DIP	None ♦	PY826
77	LC703831-300.28/1E	.7	4	NBEKP	19u†	28	3.0	6.0	30	200	20	40m	40m	100k	11	FE,Ref	None ♦	PY826
78	FE0502	700m	4	NBK		15	3.0	10	30	100	20†	30m	120m	50k		Ref,Trn,Trf	None ♦	PY514a Δ
79	LC703840-300.15/1S	.7	4	NBK	31u†	16	3.0	6.0	30	200	20	40m	80m	100k	11	FE,Ref	None ♦	PY514a
80	LC703840-300.27/1E	.7	4	NBK	21u†	28	3.0	6.0	30	200	20	40m	40m	100k	11	FE,Trf	None ♦	PY514a
81	LC703840-300.28/1E	.7	4	NBK	21u†	28	3.0	6.0	30	200	20	40m	40m	100k	11	FE,Ref	None ♦	PY514a
82	51E3T08	700m	4	NEC		48	4.0	15	32	60		15m	25m		%	Trn	None ♦	PY1081c
83	51E5F08	700m	4	NEC		15	3	12	30	60		80m	120m		%	Trf	None ♦	PY1081c
84	51E5R08	700m	4	NEC		15	3	12	30	60		80m	120m		%	Ref	None ♦	PY1081c
85	51E5T08	700m	4	NEC		15	3	12	30	60		80m	120m		%	Trn	None ♦	PY1081c
86	51E9F08	700m	4	NEC		29	4	15	30	60		32m	55m		%	Trf	None ♦	PY1081c
87	51E9R08	700m	4	NEC		29	4	15	30	60		32m	55m		%	Ref	None ♦	PY1081c
88	51E9T08	700m	4	NEC		29	4	15	30	60		32m	55m		%	Trn	None ♦	PY1081c
89	53D3F08	700m	4	NEC		48	4	15	32	60		15m	25m		%	Trf	None ♦	PY1081d
90	53D3R08	700m	4	NEC		48	4	15	32	60		15m	25m		%	Ref	None ♦	PY1081d
91	53D3T08	700m	4	NEC		48	4	15	32	60		15m	25m		%	Trn	None ♦	PY1081d
92	53D5F08	700m	4	NEC		15	3	12	30	60		80m	120m		%	Trf	None ♦	PY1081d
93	53D5R08	700m	4	NEC		15	3.0	12	30	60		80m	120m		%	Ref	None ♦	PY1081d
94	53D5T08	700m	4	NEC		15	3	12	30	60		80m	120m		%	Trn	None ♦	PY1081d
95	65070-4X-XA	700m	4	NK $		58	2.6	10	30	100	20†	80m	110m				EB404c	PY514i
96	65070-4X-XC	700m	4	NK $		48	3.0	10	30	100	20†	90m	110m				EB404c	PY514i
97	65070-4X-XD	700m	4	NK $		26	3.0 †		30	100	20†	100m	130m				EB404c	PY514i
98	65070-4X-XM	700m	4	NK $		26	4.5	5.5	30	100	10†	50m	80m				EB404c	PY514i
99	65070-4X-XQ	700m	4	NK $		25	3.0 †		30	100	18†	90m	12m				EB404c	PY514i
100	FE0502ABR	.7	4	NKM		28		10 Δ	30	100	20	150m	600m	50k	2	No polar	None ♦	PY514a
101	FED0501C	.70	4	NLP		25	3.0	5.5	30	35	20†	30m	120m	50k	9	Ref	None ♦	PY586
102	FED0501D	.70	4	NLP		25	3.0	5.5	30	35	20†	30m	120m	50k		Ref	None ♦	PY586
103	65070-3HX-XA	700m	4*	NPEK$		58	2.6	10	30	100	20†	80m	110m				EB404b	PY513b
104	65070-3HX-XC	700m	4*	NPEK$		48	3.0	10	30	100	20†	90m	110m				EB404b	PY513b
105	65070-3HX-XD	700m	4*	NPEK$		26	3.0 †		30	100	20†	100m	130m				EB404b	PY513b

SYMBOLS AND CODES EXPLAINED IN INTERPRETER

36. LCD DISPLAYS - Seven-Segment Numeric (Cont'd)

IN ORDER OF FONT AND: (1) CHAR. HEIGHT (2) No CHAR. (3) PWR CONSUMP & (4)TYPE No.

LINE No.	4 TYPE NUMBER	1 CHAR. HGHT. (in)	2 NO. CHAR	NOMEN	3 MAX. PWR. CONS. Δ-/seg (W)	TEMP RNG. CODE - +	OPERATING VOLTAGE MIN. VOLT (V)	MAX. VOLT (V)	FREQ. MIN. (Hz)	FREQ. MAX. (Hz)	CONTRAST RATIO	RISE TIME tr (s)	DECAY TIME tf (s)	LIFE (hrs)	COL -OR	FEATURES	SCHE-MATIC	DRAWING
1	65070-3HX-XM	700m	4*	NPEK$		26	4.5	5.5	30	100	10†	50m	80m				EB404b	PY513b
2	65070-3HX-XQ	700m	4*	NPEK$		25	3.0 †		30	100	18†	90m	120m				EB404b	PY513b
3	54D5R08H	700m	4	NR		15	3.0	12	30	60		80m	120m*			Ref	None ♦	PY1082b
4	54E3R08GH	700m	4	NR		48	4.0	15	30	60		20m	45m*			Ref	None ♦	PY1082b
5	54E5R08H	700m	4	NR		15	3.0	12	30	60		80m	120m*			Ref	None ♦	PY1082b
6	54E9R08GH	700m	4	NR		29	4.0	15	30	60		32m	55m*			Ref	None ♦	PY1082b
7	54R3R08GH	700m	4	NR		48	4.0	15	30	60		20m	45m*			Ref	None ♦	PY1082b
8	54R9R08GH	700m	4	NR		29	4.0	15	30	60		32m	55m*			Ref	None ♦	PY1082b
9	3903-01	.70	4	NR		57	3.0	9.0	30	100	20	30m	45m*	50k		FE	E404b	PY740
10	3903-05	.70	4	NR		15	3.0	9.0	30	100	20	7.5m	150m*	50k		FE	E404b	PY740
11	3903-06	.70	4	NR		19	4.5	13	30	100	20	45m	75m*	50k		FE	E404b	PY740
12	3907-01	.70	4	NR		57	3.0	9.0	30	100	20	30m	45m*	50k		FE	E404a	PY741
13	3907-05	.70	4	NR		15	3.0	9.0	30	100	20	75m	150m*	50k		FE	E404a	PY741
14	3907-06	.70	4	NR		19	4.5	13	30	100	20	45m	75m*	50k		FE	E404a	PY741
15	3919-01	.70	4	NR		57	3.0	9.0	30	100	20	30m	45m*	50k		FE	E506b	PY745
16	3919-05	.70	4	NR		15	3.0	9.0	30	100	20	75m	150m*	50k		FE	E506b	PY745
17	3919-06	.70	4	NR		19	4.5	13	30	100	20	45m	75m*	50k		FE	E506b	PY745
18	3931-01	.70	4	NR		57	3.0	9.0	30	100	20	30m	45m*	50k		FE	EB404p	PY748
19	3931-05	.70	4	NR		15	3.0	9.0	30	100	20	75m	150m*	50k		FE	EB404p	PY748
20	3931-06	.70	4	NR		19	4.5	13	30	100	20	45m	75m*	50k		FE	EB404p	PY748
21	LTE1071HS	.70	4	NRK		26	3.5	8.0	30	100	18	60m	95m*			Trf	None ♦	PY514a
22	LTE1071HW	.70	4	NRK		28	3.5	8.0	30	100	10	60m	95m*			Trf	None ♦	PY514a
23	LTE1071RS	.70	4	NRK		26	3.5	8.0	30	100	18	60m	95m*			Ref	None ♦	PY514a
24	LTE1071RW	.70	4	NRK		28	3.5	8.0	30	100	10	60m	95m*			Ref	None ♦	PY514a
25	LTE1071TS	.70	4	NRK		26	3.5	8.0	30	100	18	60m	95m*			Trn	None ♦	PY514a
26	LTE1071TW	.70	4	NRK		28	3.5	8.0	30	100	10	60m	95m*			Trn	None ♦	PY514a
27	LTE1071XS	.70	4	NRK		26	3.5	8.0	30	100	18	60m	95m*			No polar	None ♦	PY514a
28	LTE1071XW	.70	4	NRK		28	3.5	8.0	30	100	10	60m	95m*			No polar	None ♦	PY514a
29	LTE1072HS	.70	4	NRK		26	3.5	8.0	30	100	18	60m	95m*			Trf	None ♦	PY514a
30	LTE1072HW	.70	4	NRK		28	3.5	8.0	30	100	10	60m	95m*			Trf	None ♦	PY514a
31	LTE1072RS	.70	4	NRK		26	3.5	8.0	30	100	18	60m	95m*			Ref	None ♦	PY514a
32	LTE1072RW	.70	4	NRK		28	3.5	8.0	30	100	10	60m	95m*			Ref	None ♦	PY514a
33	LTE1072TS	.70	4	NRK		26	3.5	8.0	30	100	18	60m	95m*			Trn	None ♦	PY514a
34	LTE1072TW	.70	4	NRK		28	3.5	8.0	30	100	10	60m	95m*			Trn	None ♦	PY514a
35	LTE1072XS	.70	4	NRK		26	3.5	8.0	30	100	18	60m	95m*			No polar	None ♦	PY514a
36	LTE1072XW	.70	4	NRK		28	3.5	8.0	30	100	10	60m	95m*			No polar	None ♦	PY514a
37	LTE1110HS	.70	4	NRK		26	3.5	8.0	30	100	18	60m	95m*			Trf	None ♦	PY514a
38	LTE1110HW	.70	4	NRK		28	3.5	8.0	30	100	10	60m	95m*			Trf	None ♦	PY514a
39	LTE1110RS	.70	4	NRK		26	3.5	8.0	30	100	18	60m	95m*			Ref	None ♦	PY514a
40	LTE1110RW	.70	4	NRK		28	3.5	8.0	30	100	10	60m	95m*			Ref	None ♦	PY514a
41	LTE1110TS	.70	4	NRK		26	3.5	8.0	30	100	18	60m	95m*			Trn	None ♦	PY514a
42	LTE1110TW	.70	4	NRK		28	3.5	8.0	30	100	10	60m	95m*			Trn	None ♦	PY514a
43	LTE1110XW	.70	4	NRK		28	3.5	8.0	30	100	10	60m	95m*			No polar	None ♦	PY514a
44	103B01AA	.7	5*	N		15	3.0 Δ	12 Δ		32 †					11 %	Reflective	E405a	PY294b
45	103B01AB	.7	5*	N		15	3.0 Δ	12 Δ		32 †					11 %	Transflective	E405a	PY294b
46	103B01AC	.7	5*	N		15	3.0 Δ	12 Δ		32 †					11 %	Transmissive	E405a	PY294b
47	103B01AD	.7	5*	N		15	3.0 Δ	12 Δ		32 †					11 %	Transmissive	E405a	PY294b
48	103B01BF	.7	5*	N		15	3.0 Δ	12 Δ		32 †					11 %	Reflective	E405a	PY294b
49	103B01BG	.7	5*	N		15	3.0 Δ	12 Δ		32 †					11 %	Transflective	E405a	PY294b
50	103B01BH	.7	5*	N		15	3.0 Δ	12 Δ		32 †					11 %	Transmissive	E405a	PY294b
51	103B01BK	.7	5*	N		15	3.0 Δ	12 Δ		32 †					11 %	Transmissive	E405a	PY294b
52	103B03AA	.7	5*	N		38	4.0 Δ	12 Δ		32 †					11 %	Reflective	E405a	PY294b
53	103B03AB	.7	5*	N		38	4.0 Δ	12 Δ		32 †					11 %	Transflective	E405a	PY294b
54	103B03AC	.7	5*	N		38	4.0 Δ	12 Δ		32 †					11 %	Transmissive	E405a	PY294b
55	103B03AD	.7	5*	N		38	4.0 Δ	12 Δ		32 †					11 %	Transmissive	E405a	PY294b
56	103B03BF	.7	5*	N		38	4.0 Δ	12 Δ		32 †					11 %	Reflective	E405a	PY294b
57	103B03BG	.7	5*	N		38	4.0 Δ	12 Δ		32 †					11 %	Transflective	E405a	PY294b
58	103B03BH	.7	5*	N		38	4.0 Δ	12 Δ		32 †					11 %	Transmissive	E405a	PY294b
59	103B03BK	.7	5*	N		38	4.0 Δ	12 Δ		32 †					11 %	Transmissive	E405a	PY294b
60	103F01AA	.7	5*	N		15	3.0 Δ	12 Δ		32 †					11 %	Reflective	E405a	PY294b
61	103F01AB	.7	5*	N		15	3.0 Δ	12 Δ		32 †					11 %	Transflective	E405a	PY294b
62	103F01AC	.7	5*	N		15	3.0 Δ	12 Δ		32 †					11 %	Transmissive	E405a	PY294b
63	103F01AD	.7	5*	N		15	3.0 Δ	12 Δ		32 †					11 %	Transmissive	E405a	PY294b
64	103F01BF	.7	5*	N		15	3.0 Δ	12 Δ		32 †					11 %	Reflective	E405a	PY294b
65	103F01BG	.7	5*	N		15	3.0 Δ	12 Δ		32 †					11 %	Transflective	E405a	PY294b
66	103F01BH	.7	5*	N		15	3.0 Δ	12 Δ		32 †					11 %	Transmissive	E405a	PY294b
67	103F01BK	.7	5*	N		15	3.0 Δ	12 Δ		32 †					11 %	Transmissive	E405a	PY294b
68	103F03AA	.7	5*	N		38	4.0 Δ	12 Δ		32 †					11 %	Reflective	E405a	PY294b
69	103F03AB	.7	5*	N		38	4.0 Δ	12 Δ		32 †					11 %	Transflective	E405a	PY294b
70	103F03AC	.7	5*	N		38	4.0 Δ	12 Δ		32 †					11 %	Transmissive	E405a	PY294b
71	103F03AD	.7	5*	N		38	4.0 Δ	12 Δ		32 †					11 %	Transmissive	E405a	PY294b
72	103F03BF	.7	5*	N		38	4.0 Δ	12 Δ		32 †					11 %	Reflective	E405a	PY294b
73	103F03BG	.7	5*	N		38	4.0 Δ	12 Δ		32 †					11 %	Transflective	E405a	PY294b
74	103F03BH	.7	5*	N		38	4.0 Δ	12 Δ		32 †					11 %	Transmissive	E405a	PY294b
75	103F03BK	.7	5*	N		38	4.0 Δ	12 Δ		32 †					11 %	Transmissive	E405a	PY294b
76	282R9R21GHB	700m	5	N		29	4.0	15	30	60		32m	55m*			Ref	None ♦	PY1017
77	FE1202A	700m	5	N		05	3.0 Δ	5.5 Δ	30	35	20†	30m	120m	50k		Transmissive	None ♦	PY801
78	57D9F21	700m	5	NE		29	4	15	30	60		32m	55m		%	Trf	None ♦	PY1085
79	57D9R21	700m	5	NE		29	4	15	30	60		32m	55m		%	Ref	None ♦	PY1085
80	57D9T21	700m	5	NE		29	4	15	30	60		32m	55m		%	Trn	None ♦	PY1085
81	65070-5X-XA	700m	5	NK $		58	2.6	10	30	100	20†	80m	110m				EB506c	PY1244
82	65070-5X-XC	700m	5	NK $		48	3.0	10	30	100	20†	90m	110m				EB506c	PY1244
83	65070-5X-XD	700m	5	NK $		26	3.0 †		30	100	20†	100m	130m				EB506c	PY1244
84	65070-5X-XM	700m	5	NK $		26	4.5	5.5	30	100	10†	50m	80m				EB506c	PY1244
85	65070-5X-XQ	700m	5	NK $		25	3.0 †		30	100	18†	90m	120m				EB506c	PY1244
86	SX318-5	.70	5	NL	28u	16	3.0	15			20†	100m	160m	50k			None	PY713 Δ
87	SX318G	.70	5	NL	28u	15	3.0	15			20†	100m	120m	50k			None	PY713 Δ
88	SX318M	.70	5	NL	28u	29	3.0	15			20†	60m	100m	50k			None	PY713 Δ
89	SX318X	.70	5	NL	24u	25	9.0	15			20†	80m	40m	50k			None	PY713 Δ
90	57D9R21GH	.70	5	NLK		29	5.0	9.0	30	60	20	20m	140m				None	PY535
91	SX377-5	.70	5	NLK	28u	16	3.0	15			20†	100m	160m	50k			None	PY713 Δ
92	SX377G	.70	5	NLK	28u	15	3.0	15			20†	100m	120m	50k			None	PY713 Δ
93	SX377M	.70	5	NLK	28u	29	3.0	15			20†	60m	100m	50k			None	PY713 Δ
94	SX377X	.70	5	NLK	24u	25	9.0	15			20†	80m	40m	50k			None	PY713 Δ
95	57D5R21H	700m	5	NR		15	3.0	12	30	60		80m	120m*			Ref	None ♦	PY1085
96	57E3R21GH	700m	5	NR		48	4.0	15	30	60		20m	45m*			Ref	None ♦	PY1085
97	57E5R21H	700m	5	NR		15	3.0	12	30	60		80m	120m*			Ref	None ♦	PY1085
98	57E9R21GH	700m	5	NR		29	4.0	15	30	60		32m	55m*			Ref	None ♦	PY1085
99	57R3R21GH	700m	5	NR		48	4.0	15	30	60		20m	45m*			Ref	None ♦	PY1085
100	57R9R21GH	700m	5	NR		29	4.0	15	30	60		32m	55m*			Ref	None ♦	PY1085
101	3915-01	.70	5	NR		26§	3.0	15	30	100	20†	30m	100m	50k	95		EB505b	PY535
102	3915-05	.70	5	NR		15§	3.0	9.0	30	100	20†	75m	150m	50k	95		EB505b	PY535
103	3915-06	.70	5	NR		19§	4.0	13	30	100	20†	45m	75m	50k	95		EB505b	PY535
104	LTF1541HS	.70	5	NRM		26	3.5	8.0	30	100	18	60m	95m*			Trf	None ♦	PY1017
105	LTF1541HW	.70	5	NRM		28	3.5	8.0	30	100	10	60m	95m*			Trf	None ♦	PY1017
106	LTF1541RS	.70	5	NRM		26	3.5	8.0	30	100	18	60m	95m*			Ref	None ♦	PY1017
107	LTF1541RW	.70	5	NRM		28	3.5	8.0	30	100	10	60m	95m*			Ref	None ♦	PY1017
108	LTF1541TS	.70	5	NRM		26	3.5	8.0	30	100	18	60m	95m*			Trn	None ♦	PY1017
109	LTF1541TW	.70	5	NRM		28	3.5	8.0	30	100	10	60m	95m*			Trn	None ♦	PY1017
110	LTF1541XS	.70	5	NRM		26	3.5	8.0	30	100	18	60m	95m*			No polar	None ♦	PY1017

SYMBOLS AND CODES EXPLAINED IN INTERPRETER

36. LCD DISPLAYS - Seven-Segment Numeric (Cont'd)

IN ORDER OF FONT AND: (1) CHAR. HEIGHT (2) No CHAR. (3) PWR CONSUMP & (4)TYPE No.

LINE No.	4 TYPE NUMBER	1 CHAR. HGHT. (in)	2 NO. CHAR	NOMEN	3 MAX. PWR. CONS. Δ-/seg (W)	TEMP RNG. CODE - +	OPERATING VOLTAGE MIN. VOLT (V)	MAX. VOLT (V)	FREQ. MIN. (Hz)	FREQ. MAX. (Hz)	CONTRAST RATIO	RISE TIME tr (s)	DECAY TIME tf (s)	LIFE (hrs)	COL -OR	FEATURES	SCHE-MATIC	DRAWING
1	LTF1541XW	.70	5	NRM		28	3.5	8.0	30	100	10	60m	95m*			No polar	None ♦	PY1017
2	3939-01	.70	5	NRV		26§	3.0	15	30	100	20†	30m	100m	50k	95		E405a	PY720e Δ
3	3939-05	.70	5	NRV		15§	3.0	9.0	30	100	20†	75m	150m	50k	95		E405a	PY720e Δ
4	3939-06	.70	5	NRV		19§	4.0	13	30	100	20†	45m	75m	50k	95		E405a	PY720e Δ
5	104B01AA	.7	6	N		15	3.0 Δ	12 Δ		32 †					11 %	Reflective	E506b	PY516 ☑
6	104B01AB	.7	6	N		15	3.0 Δ	12 Δ		32 †					11 %	Transflective	E506b	PY516 ☑
7	104B01AC	.7	6	N		15	3.0 Δ	12 Δ		32 †					11 %	Transmissive	E506b	PY516 ☑
8	104B01AD	.7	6	N		15	3.0 Δ	12 Δ		32 †					11 %	Transmissive	E506b	PY516 ☑
9	104B01BF	.7	6	N		15	3.0 Δ	12 Δ		32 †					11 %	Reflective	E506b	PY516 ☑
10	104B01BG	.7	6	N		15	3.0 Δ	12 Δ		32 †					11 %	Transflective	E506b	PY516 ☑
11	104B01BH	.7	6	N		15	3.0 Δ	12 Δ		32 †					11 %	Transmissive	E506b	PY516 ☑
12	104B01BK	.7	6	N		15	3.0 Δ	12 Δ		32 †					11 %	Transmissive	E506b	PY516 ☑
13	104B03AA	.7	6	N		38	4.0 Δ	12 Δ		32 †					11 %	Reflective	E506b	PY516 ☑
14	104B03AB	.7	6	N		38	4.0 Δ	12 Δ		32 †					11 %	Transflective	E506b	PY516 ☑
15	104B03AC	.7	6	N		38	4.0 Δ	12 Δ		32 †					11 %	Transmissive	E506b	PY516 ☑
16	104B03AD	.7	6	N		38	4.0 Δ	12 Δ		32 †					11 %	Transmissive	E506b	PY516 ☑
17	104B03BF	.7	6	N		38	4.0 Δ	12 Δ		32 †					11 %	Reflective	E506b	PY516 ☑
18	104B03BG	.7	6	N		38	4.0 Δ	12 Δ		32 †					11 %	Transflective	E506b	PY516 ☑
19	104B03BH	.7	6	N		38	4.0 Δ	12 Δ		32 †					11 %	Transmissive	E506b	PY516 ☑
20	104B03BK	.7	6	N		38	4.0 Δ	12 Δ		32 †					11 %	Transmissive	E506b	PY516 ☑
21	104F01AA	.7	6	N		15	3.0 Δ	12 Δ		32 †					11 %	Reflective	E506b	PY516 ☑
22	104F01AB	.7	6	N		15	3.0 Δ	12 Δ		32 †					11 %	Transflective	E506b	PY516 ☑
23	104F01AC	.7	6	N		15	3.0 Δ	12 Δ		32 †					11 %	Transmissive	E506b	PY516 ☑
24	104F01AD	.7	6	N		15	3.0 Δ	12 Δ		32 †					11 %	Transmissive	E506b	PY516 ☑
25	104F01BF	.7	6	N		15	3.0 Δ	12 Δ			32†				11 %	Reflective	E506b	PY516 ☑
26	104F01BG	.7	6	N		15	3.0 Δ	12 Δ			32†				11 %	Transflective	E506b	PY516 ☑
27	104F01BH	.7	6	N		15	3.0 Δ	12 Δ			32†				11 %	Transmissive	E506b	PY516 ☑
28	104F01BK	.7	6	N		15	3.0 Δ	12 Δ			32†				11 %	Transmissive	E506b	PY516 ☑
29	104F03AA	.7	6	N		38	4.0 Δ	12 Δ			32†				11 %	Reflective	E506b	PY516 ☑
30	104F03AB	.7	6	N		38	4.0 Δ	12 Δ			32†				11 %	Transflective	E506b	PY516 ☑
31	104F03AC	.7	6	N		38	4.0 Δ	12 Δ			32†				11 %	Transmissive	E506b	PY516 ☑
32	104F03AD	.7	6	N		38	4.0 Δ	12 Δ			32†				11 %	Transmissive	E506b	PY516 ☑
33	104F03BF	.7	6	N		38	4.0 Δ	12 Δ			32†				11 %	Reflective	E506b	PY516 ☑
34	104F03BG	.7	6	N		38	4.0 Δ	12 Δ			32†				11 %	Transflective	E506b	PY516 ☑
35	104F03BH	.7	6	N		38	4.0 Δ	12 Δ		32 †					11 %	Transmissive	E506b	PY516 ☑
36	104F03BK	.7	6	N		38	4.0 Δ	12 Δ		32 †					11 %	Transmissive	E506b	PY516 ☑
37	3736-8	700m	6	N	3.0u†	06	5.0	15	30	100	20	100m	120m	50k	11	FE	None	None
38	3736-18	700m	6	N	3.0u†	06	5.0	15	30	100	20	100m	120m	50k	11	FE	None	None
39	SX179-5	700m	6	N	28u†	16	3.0	15			20†	100m	160m	50k			None	PY590a Δ
40	SX179-6	700m	6	N	30u†	28	4.0	15			20†	75m	75m	50k			None	PY590a Δ
41	SX179G	.70	6	N	28	15	3.0	15			20†	100m	120m	50k			None	PY590a Δ
42	SX179M	.70	6	N	28	29	3.0	15			20†	60m	100m	50k			None	PY590a Δ
43	SX179X	.70	6	N	24u	25	9.0	15			20†	80m	40m	50k			None	PY590a Δ
44	FE0601	700m	6	NBK		15	3.0	10	30	100	20†	30m	120m	50k		Ref,Trn,Trf	None ♦	PY516a Δ
45	70D5F10	700m	6	NE		15	3	12	30	60		80m	120m		%	Trf	None ♦	PY1087b
46	65070-6X-XA	700m	6	NK $		58	2.6	10	30	100	20†	80m	110m				EB506b	PY516d
47	65070-6X-XC	700m	6	NK $		48	3.0	10	30	100	20†	90m	110m				EB506b	PY516d
48	65070-6X-XD	700m	6	NK $		48	3.0 †		30	100	20†	100m	130m				EB506b	PY516d
49	65070-6X-XM	700m	6	NK $		26	4.5	5.5	30	100	10†	50m	80m				EB506b	PY516d
50	65070-6X-XQ	700m	6	NK $		25	3.0 †		30	100	18†	90m	120m				EB506b	PY516d
51	FE0601TGB	.7	6	NKM		25		10 Δ	30	100	20	150m	600m	50k	6	No polar	None ♦	PY516a
52	FE0601TGQ	.7	6	NKM		25		10 Δ	30	100	20	150m	600m	50k		No polar	None ♦	PY516a
53	3920-01	.70	6	NR		26§	3.0	15	30	100	20†	30m	100m	50k	95		E506b	PY814 Δ
54	3920-05	.70	6	NR		15§	3.0	9.0	30	100	20†	75m	150m	50k	95		E506b	PY814 Δ
55	3920-06	.70	6	NR		19§	4.0	13	30	100	20†	45m	75m	50k	95		E506b	PY814 Δ
56	70D5R10H	700m	6	NRK		15	3.0	12	30	60		80m	120m*			Ref	None ♦	PY1087b
57	70E3R10GH	700m	6	NRK		48	4.0	15	30	60		20m	45m*			Ref	None ♦	PY1087b
58	70E5R10H	700m	6	NRK		15	3.0	12	30	60		80m	120m*			Ref	None ♦	PY1087b
59	70E9R10GH	700m	6	NRK		29	4.0	15	30	60		32m	55m*			Ref	None ♦	PY1087b
60	70R3R10GH	700m	6	NRK		48	4.0	15	30	60		20m	45m*			Ref	None ♦	PY1087b
61	70R9R10GH	700m	6	NRK		29	4.0	15	30	60		32m	55m*			Ref	None ♦	PY1087b
62	LTG1370HS	.70	6	NRK		26	3.5	8.0	30		18	60m	95m*			Trf	None ♦	PY516a Δ
63	LTG1370HW	.70	6	NRK		28	3.5	8.0	30		10	60m	95m*			Trf	None ♦	PY516a Δ
64	LTG1370RS	.70	6	NRK		26	3.5	8.0	30		18	60m	95m*			Ref	None ♦	PY516a Δ
65	LTG1370RW	.70	6	NRK		28	3.5	8.0	30		10	60m	95m*			Ref	None ♦	PY516a Δ
66	LTG1370TS	.70	6	NRK		26	3.5	8.0	30	100	18	60m	95m*			Trn	None ♦	PY516a Δ
67	LTG1370TW	.70	6	NRK		28	3.5	8.0	30	100	10	60m	95m*			Trn	None ♦	PY516a Δ
68	LTG1370XS	.70	6	NRK		26	3.5	8.0	30	100	18	60m	95m*			No polar	None ♦	PY516a Δ
69	LTG1370XW	.70	6	NRK		28	3.5	8.0	30	100	10	60m	95m*			No polar	None ♦	PY516a Δ
70	LTG1381HS	.70	6	NRK		26	3.5	8.0	30	100	18	60m	95m*			Trf	None ♦	PY516a
71	LTG1381HW	.70	6	NRK		28	3.5	8.0	30	100	10	60m	95m*			Trf	None ♦	PY516a
72	LTG1381RS	.70	6	NRK		26	3.5	8.0	30	100	18	60m	95m*			Ref	None ♦	PY516a
73	LTG1381RW	.70	6	NRK		28	3.5	8.0	30	100	10	60m	95m*			Ref	None ♦	PY516a
74	LTG1381TS	.70	6	NRK		26	3.5	8.0	30	100	18	60m	95m*			Trn	None ♦	PY516a
75	LTG1381TW	.70	6	NRK		28	3.5	8.0	30	100	10	60m	95m*			Trn	None ♦	PY516a
76	LTG1381XS	.70	6	NRK		26	3.5	8.0	30	100	18	60m	95m*			No polar	None ♦	PY516a
77	LTG1381XW	.70	6	NRK		28	3.5	8.0	30	100	10	60m	95m*			No polar	None ♦	PY516a
78	LC943860-301.28/1E	.71	6	NBK		28	3	6	30	200	20	40m	40m	100k	11	Direct Drive	None	PY1470
79	118B01AA	743m	2	N		15	3.0 Δ	12 Δ		32 †					11 %	Reflective	EB182a	PY1221
80	118B01AB	743m	2	N		15	3.0 Δ	12 Δ		32 †					11 %	Transflective	EB182a	PY1221
81	118B01AC	743m	2	N		15	3.0 Δ	12 Δ		32 †					11 %	Transmissive	EB182a	PY1221
82	118B01AD	743m	2	N		15	3.0 Δ	12 Δ		32 †					11 %	Transmissive	EB182a	PY1221
83	118B01BF	743m	2	N		15	3.0 Δ	12 Δ		32 †					11 %	Reflective	EB182a	PY1221
84	118B01BG	743m	2	N		15	3.0 Δ	12 Δ		32 †					11 %	Transflective	EB182a	PY1221
85	118B01BH	743m	2	N		15	3.0 Δ	12 Δ		32 †					11 %	Transmissive	EB182a	PY1221
86	118B01BK	743m	2	N		15	3.0 Δ	12 Δ		32 †					11 %	Transmissive	EB182a	PY1221
87	118B03AA	743m	2	N		38	4.0 Δ	12 Δ		32 †					11 %	Reflective	EB182a	PY1221
88	118B03AB	743m	2	N		38	4.0 Δ	12 Δ		32 †					11 %	Transflective	EB182a	PY1221
89	118B03AC	743m	2	N		38	4.0 Δ	12 Δ		32 †					11 %	Transmissive	EB182a	PY1221
90	118B03AD	743m	2	N		38	4.0 Δ	12 Δ		32 †					11 %	Transmissive	EB182a	PY1221
91	118B03BF	743m	2	N		38	4.0 Δ	12 Δ		32 †					11 %	Reflective	EB182a	PY1221
92	118B03BG	743m	2	N		38	4.0 Δ	12 Δ		32 †					11 %	Transflective	EB182a	PY1221
93	118B03BH	743m	2	N		38	4.0 Δ	12		32 †					11 %	Transmissive	EB182a	PY1221
94	118B03BK	743m	2	N		38	4.0 Δ	12		32 †					11 %	Transmissive	EB182a	PY1221
95	118F01AA	743m	2	N		15	3.0 Δ	12 Δ		32 †					11 %	Reflective	EB182a	PY1221
96	118F01AB	743m	2	N		15	3.0 Δ	12 Δ		32 †					11 %	Transflective	EB182a	PY1221
97	118F01AC	743m	2	N		15	3.0 Δ	12 Δ		32 †					11 %	Transmissive	EB182a	PY1221
98	118F01AD	743m	2	N		15	3.0 Δ	12 Δ		32 †					11 %	Transmissive	EB182a	PY1221
99	118F01BF	743m	2	N		15	3.0 Δ	12 Δ		32 †					11 %	Reflective	EB182a	PY1221
100	118F01BG	743m	2	N		15	3.0 Δ	12 Δ		32 †					11 %	Transflective	EB182a	PY1221
101	118F01BH	743m	2	N		15	3.0 Δ	12 Δ		32 †					11 %	Transmissive	EB182a	PY1221
102	118F01BK	743m	2	N		15	3.0 Δ	12 Δ		32 †					11 %	Transmissive	EB182a	PY1221
103	118F03AA	743m	2	N		38	4.0 Δ	12 Δ		32 †					11 %	Reflective	EB182a	PY1221
104	118F03AB	743m	2	N		38	4.0 Δ	12 Δ		32 †					11 %	Transflective	EB182a	PY1221
105	118F03AC	743m	2	N		38	4.0 Δ	12 Δ		32 †					11 %	Transmissive	EB182a	PY1221
106	118F03AD	743m	2	N		38	4.0 Δ	12 Δ		32 †					11 %	Transmissive	EB182a	PY1221
107	118F03BF	743m	2	N		38	4.0 Δ	12 Δ		32 †					11 %	Reflective	EB182a	PY1221
108	118F03BG	743m	2	N		38	4.0 Δ	12 Δ		32 †					11 %	Transflective	EB182a	PY1221
109	118F03BH	743m	2	N		38	4.0 Δ	12 Δ		32 †					11 %	Transmissive	EB182a	PY1221

SYMBOLS AND CODES EXPLAINED IN INTERPRETER

36. LCD DISPLAYS - Seven-Segment Numeric (Cont'd)

IN ORDER OF FONT AND: (1) CHAR. HEIGHT (2) No CHAR. (3) PWR CONSUMP & (4)TYPE No.

LINE No.	4 TYPE NUMBER	1 CHAR. HGHT. (in)	2 NO. CHAR	NOMEN	3 MAX. PWR. CONS. Δ-/seg (W)	TEMP RNG. CODE - +	OPERATING VOLTAGE MIN. VOLT (V)	MAX. VOLT (V)	FREQ. MIN. (Hz)	MAX. (Hz)	CONTRAST RATIO	RISE TIME tr (s)	DECAY TIME tf (s)	LIFE (hrs)	COL -OR	FEATURES	SCHE-MATIC	DRAWING
1	118F03BK	743m	2	N		38	4.0 Δ	12 Δ		32 †					11 %	Transmissive	EB182a	PY1221
2	121B07AA	744m	5*	N		15	1.9 Δ					35m	80m		11 %	Reflective	EB155a	PY1222
3	121B07AB	744m	5*	N		15	1.9 Δ					35m	80m		11 %	Transflective	EB155a	PY1222
4	121B07AC	744m	5*	N		15	1.9 Δ					35m	80m		11 %	Transmissive	EB155a	PY1222
5	121B07AD	744m	5*	N		15	1.9 Δ					35m	80m		11 %	Transmissive	EB155a	PY1222
6	121F07AA	744m	5*	N		15	1.9 Δ					35m	80m		11 %	Reflective	EB155a	PY1222
7	121F07AB	744m	5*	N		15	1.9 Δ					35m	80m		11 %	Transflective	EB155a	PY1222
8	121F07AC	744m	5*	N		15	1.9 Δ					35m	80m		11 %	Transmissive	EB155a	PY1222
9	121F07AD	744m	5*	N		15	1.9 Δ					35m	80m		11 %	Transmissive	EB155a	PY1222
10	M5735-5	750m	3*	NEPV	28u†	16	3.0	15			20†	100m	160m	50k		FE	None	PY588b Δ
11	M5735-6	750m	3*	NEPV	30u†	28	4.0	15			20†	75m	75m	50k		FE	None	PY588b Δ
12	M5735G	.75	3*	NEPV	28u	15	3.0	15			20†	100m	120m	50k		FE	None	PY588b Δ
13	M5735M	.75	3*	NEPV	28u	29	3.0	15			20†	60m	100m	50k		FE	None	PY588b Δ
14	M5735X	.75	3*	NEPV	24u	25	9.0	15			20†	80m	40m	50k		FE	None	PY588b Δ
15	M5740-5	750m	4	NEP	28u†	16	3.0	15			20†	100m	160m	50k		FE	None	PY589c Δ
16	M5740-6	750m	4	NEP	30u†	28	4.0	15			20†	75m	75m	50k		FE	None	PY589c Δ
17	M5740G	.75	4	NEP	28u	15	3.0	15			20†	100m	120m	50k		FE	None	PY589c Δ
18	M5740M	.75	4	NEP	28u	29	3.0	15			20†	60m	100m	50k		FE	None	PY589c Δ
19	M5740X	.75	4	NEP	24u	25	9.0	15			20†	80m	40m	50k		FE	None	PY589c Δ
20	M5745-5	750m	4*	NEPV	28u†	16	3.0	15			20†	100m	160m	50k		FE	None	PY622 Δ
21	M5745-6	750m	4*	NEPV	30u†	28	4.0	15			20†	75m	75m	50k		FE	None	PY622 Δ
22	M5745G	.75	4*	NEPV	28u	15	3.0	15			20†	100m	120m	50k		FE	None	PY622 Δ
23	M5745M	.75	4*	NEPV	28u	29	3.0	15			20†	60m	100m	50k		FE	None	PY622 Δ
24	M5745X	.75	4*	NEPV	24u	25	9.0	15			20†	80m	40m	50k		FE	None	PY622 Δ
25	R5760-5	750m	6	NEP	28u†	16	3.0	15			20†	100m	160m	50k		FE	None	PY620a Δ
26	R5760-6	750m	6	NEP	30u†	28	4.0	15			20†	75m	75m	50k		FE	None	PY620a Δ
27	R5760G	.75	6	NEP	28u	15	3.0	15			20†	100m	120m	50k		FE	None	PY620a Δ
28	R5760M	.75	6	NEP	28u	29	3.0	15			20†	60m	100m	50k		FE	None	PY620a Δ
29	R5760X	.75	6	NEP	24u	25	9.0	15			20†	80m	40m	50k		FE	None	PY620a Δ
30	123B01AA	.78	6	N		15	3 Δ	12 Δ		32					11	Ref	None ♦	PY1537
31	123B01AB	.78	6	N		15	3 Δ	12 Δ		32					11	Trf	None ♦	PY1537
32	123B01AC	.78	6	N		15	3 Δ	12 Δ		32					11	Trf	None ♦	PY1537
33	123B01AD	.78	6	N		15	3 Δ	12 Δ		32					*	Trf	None ♦	PY1537
34	123B03BF	.78	6	N		38	4 Δ	12 Δ		32 †					11	Ref	None ♦	PY1537
35	123B03BG	.78	6	N		38	4 Δ	12 Δ		32 †					11	Trf	None ♦	PY1537
36	123B03BH	.78	6	N		38	4 Δ	12 Δ		32 †					11	Trf	None ♦	PY1537
37	123B03BK	.78	6	N		38	4 Δ	12 Δ		32 †					*	Trf	None ♦	PY1537
38	123F01AA	.78	6	N		15	3 Δ	12 Δ		32 †					11	Ref	None ♦	PY1537
39	123F01AB	.78	6	N		15	3 Δ	12 Δ		32 †					11	Trf	None ♦	PY1537
40	123F01AC	.78	6	N		15	3 Δ	12 Δ		32 †					11	Trf	None ♦	PY1537
41	123F01AD	.78	6	N		15	3 Δ	12 Δ		32 †					*	Trf	None ♦	PY1537
42	123F03BF	.78	6	N		38	4 Δ	12 Δ		32 †					11	Ref	None ♦	PY1537
43	123F03BG	.78	6	N		38	4 Δ	12 Δ		32 †					11	Trf	None ♦	PY1537
44	123F03BH	.78	6	N		38	4 Δ	12 Δ		32 †					11	Trf	None ♦	PY1537
45	123F03BK	.78	6	N		38	4 Δ	12 Δ		32 †					*	Trf	None ♦	PY1537
46	3812(2)	800m	2	N	1.2u†	18	4.0	12	30	100	20	100m	100m	50k	10 $	FE	None	None
47	3812-1	.8	2	NE		06	6 †	6 †	60 †	60 †		100m	150m			DS	None	None †
48	3804(3)	800m	4	N	3.0u†	26	4.0	15	30	100	15	80m	60m	30k	11	FE;MPLX	None	None
49	85D5R11H	800m	4*	NEM		15	3.0	12	30	60		80m	120m*			Ref	None ♦	PY1083d
50	85E3R11GH	800m	4*	NEM		48	4.0	15	30	60		20m	45m*			Ref	None ♦	PY1083d
51	85E5R11H	800m	4*	NEM		15	3.0	12	30	60		80m	120m*			Ref	None ♦	PY1083d
52	85E9R11GH	800m	4*	NEM		29	4.0	15	30	60		32m	55m*			Ref	None ♦	PY1083d
53	85R3R11GH	800m	4*	NEM		48	4.0	15	30	60		20m	45m*			Ref	None ♦	PY1083d
54	85R9R11GH	800m	4*	NEM		29	4.0	15	30	60		32m	55m*			Ref	None ♦	PY1083d
55	3912-01	.80	4	NR		57	3.0	9.0	30	100	20	30m	45m*	50k		FE	E405a	PY743
56	3912-05	.80	4	NR		15	3.0	9.0	30	100	20	75m	150m*	50k		FE	E405a	PY743
57	3912-06	.80	4	NR		19	4.5	13	30	100	20	45m	75m*	50k		FE	E405a	PY743
58	3103	900m	3	N	2.0u†	06	4.0	15	30	100	20	150m	150m	30k	11	FE	None	None
59	3102(1)	1.0	2	N	4.0u†	16	4.0	15	30	100	20	100m	100m	50k	10 $	FE	None	None
60	FE0701	1.0	3*	NBEV		15	3.0	10	30	100	20†	30m	120m	50k		Ref,Trn,Trf	None ♦	PY586a Δ
61	83D5R11H	1.0	3*	NEM		15	3.0	12	30	60		80m	120m*			Ref	None ♦	PY1081e
62	83E3R11GH	1.0	3*	NEM		48	4.0	15	30	60		20m	45m*			Ref	None ♦	PY1081e
63	83E5R11H	1.0	3*	NEM		15	3.0	12	30	60		80m	120m*			Ref	None ♦	PY1081e
64	83E9R11GH	1.0	3*	NEM		29	4.0	15	30	60		32m	55m*			Ref	None ♦	PY1081e
65	83R3R11GH	1.0	3*	NEM		48	4.0	15	30	60		20m	45m*			Ref	None ♦	PY1081e
66	83R9R11GH	1.0	3*	NEM		29	4.0	15	30	60		32m	55m*			Ref	None ♦	PY1081e
67	T5135-5	1.0	3*	NEPV	28u†	16	3.0	15			20†	100m	160m	50k		FE	None	PY588c Δ
68	T5135-6	1.0	3*	NEPV	30u†	28	4.0	15			20†	75m	75m	50k		FE	None	PY588c Δ
69	T5135G	1.0	3*	NEPV	28u	15	3.0	15			20†	100m	120m	50k		FE	None	PY588c Δ
70	T5135M	1.0	3*	NEPV	28u	29	3.0	15			20†	60m	100m	50k		FE	None	PY588c Δ
71	T5135X	1.0	3*	NEPV	24u	25	9.0	15			20†	80m	40m	50k		FE	None	PY588c Δ
72	FE0701TIQ	1.0	4	FEM		25		10 Δ	30	100	20	150m	600m	50k		Ref	None ♦	PY586a
73	111F01AA	1.0	4	N		15	3.0 Δ	12 Δ		32 †					11 %	Reflective	EB404a	PY514a
74	111F01AB	1.0	4	N		15	3.0 Δ	12 Δ		32 †					11 %	Transflective	EB404a	PY514a
75	111F01AC	1.0	4	N		15	3.0 Δ	12 Δ		32 †					11 %	Transmissive	EB404a	PY514a
76	111F01AD	1.0	4	N		15	3.0 Δ	12 Δ		32 †					11 %	Transmissive	EB404a	PY514a
77	111F01BF	1.0	4	N		15	3.0 Δ	12 Δ		32 †					11 %	Reflective	EB404a	PY514a
78	111F01BG	1.0	4	N		15	3.0 Δ	12 Δ		32 †					11 %	Transflective	EB404a	PY514a
79	111F01BH	1.0	4	N		15	3.0 Δ	12 Δ		32 †					11 %	Transmissive	EB404a	PY514a
80	111F01BK	1.0	4	N		15	3.0 Δ	12 Δ		32 †					11 %	Transmissive	EB404a	PY514a
81	111F03AA	1.0	4	N		38	4.0 Δ	12 Δ		32 †					11 %	Reflective	EB404a	PY514a
82	111F03AB	1.0	4	N		38	4.0 Δ	12 Δ		32 †					11 %	Transflective	EB404a	PY514a
83	111F03AC	1.0	4	N		38	4.0 Δ	12 Δ		32 †					11 %	Transmissive	EB404a	PY514a
84	111F03AD	1.0	4	N		38	4.0 Δ	12 Δ		32 †					11 %	Transmissive	EB404a	PY514a
85	111F03BF	1.0	4	N		38	4.0 Δ	12 Δ		32 †					11 %	Reflective	EB404a	PY514a
86	111F03BG	1.0	4	N		38	4.0 Δ	12 Δ		32 †					11 %	Transflective	EB404a	PY514a
87	111F03BH	1.0	4	N		38	4.0 Δ	12 Δ		32 †					11 %	Transmissive	EB404a	PY514a
88	111F03BK	1.0	4	N		38	4.0 Δ	12 Δ		32 †					11 %	Transmissive	EB404a	PY514a
89	116F01AA	1.0	4*	N		15	3.0 Δ	12 Δ		32 †					11 %	Reflective	E404b	PY740
90	116F01AB	1.0	4*	N		15	3.0 Δ	12 Δ		32 †					11 %	Transflective	E404b	PY740
91	116F01AC	1.0	4*	N		15	3.0 Δ	12 Δ		32 †					11 %	Transmissive	E404b	PY740
92	116F01AD	1.0	4*	N		15	3.0 Δ	12 Δ		32 †					11 %	Transmissive	E404b	PY740
93	116F01BF	1.0	4*	N		15	3.0 Δ	12 Δ		32 †					11 %	Reflective	E404b	PY740
94	116F01BG	1.0	4*	N		15	3.0 Δ	12 Δ		32 †					11 %	Transflective	E404b	PY740
95	116F01BH	1.0	4*	N		15	3.0 Δ	12 Δ		32 †					11 %	Transmissive	E404b	PY740
96	116F01BK	1.0	4*	N		15	3.0 Δ	12 Δ		32 †					11 %	Transmissive	E404b	PY740
97	116F03AA	1.0	4*	N		38	4.0 Δ	12 Δ		32 †					11 %	Reflective	E404b	PY470
98	116F03AB	1.0	4*	N		38	4.0 Δ	12 Δ		32 †					11 %	Transflective	E404b	PY470
99	116F03AC	1.0	4*	N		38	4.0 Δ	12 Δ		32 †					11 %	Transmissive	E404b	PY470
100	116F03AD	1.0	4*	N		38	4.0 Δ	12 Δ		32 †					11 %	Transmissive	E404b	PY470
101	116F03BF	1.0	4*	N		38	4.0 Δ	12 Δ		32 †					11 %	Reflective	E404b	PY470
102	116F03BG	1.0	4*	N		38	4.0 Δ	12 Δ		32 †					11 %	Transflective	E404b	PY470
103	116F03BH	1.0	4*	N		38	4.0 Δ	12 Δ		32 †					11 %	Transmissive	E404b	PY740
104	116F03BK	1.0	4*	N		38	4.0 Δ	12 Δ		32 †					11 %	Transmissive	E404b	PY740
105	3104	1.0	4*	N	4.0u†	06	4.5	15	30	100	20	120m	120m	50k	11	FE	None	None
106	3124	1.0	4	N	4.0u†	06	4.0	15	30	100	20	100m	100m	50k	11	FE	None	None
107	3124-45	1.0	4	N	1.0u†	06	4.0	15	30	100	20	100m	100m	50k	11	FE	None	None
108	T5140-5	1.0	4	NEP	28u†	16	3.0	15			20†	100m	160m	50k		FE	None	PY589a Δ
109	T5140-6	1.0	4	NEP	30u†	28	4.0	15			20†	75m	75m	50k		FE	None	PY589a Δ
110	T5140G	1.0	4	NEP	28u	15	3.0	15			20†	100m	120m	50k		FE	None	PY589a Δ

SYMBOLS AND CODES EXPLAINED IN INTERPRETER

36. LCD DISPLAYS - Seven-Segment Numeric (Cont'd)

IN ORDER OF FONT AND: (1) CHAR. HEIGHT (2) No CHAR. (3) PWR CONSUMP & (4)TYPE No.

LINE No.	4 TYPE NUMBER	1 CHAR. HGHT. (in)	2 NO. CHAR	NOMEN	3 MAX. PWR. CONS. Δ-/seg (W)	TEMP RNG. CODE - +	OPERATING VOLTAGE MIN. VOLT (V)	MAX. VOLT (V)	FREQ. MIN. (Hz)	FREQ. MAX. (Hz)	CONTRAST RATIO	RISE TIME tr (s)	DECAY TIME tf (s)	LIFE (hrs)	COL -OR	FEATURES	SCHE-MATIC	DRAWING
1	T5140M	1.0	4	NEP	28u	29	3.0	15			20†	60m	100m	50k		FE	None	PY589a Δ
2	T5140X	1.0	4	NEP	24u	25	9.0	15			20†	80m	40m	50k		FE	None	PY589a Δ
3	T5145-5	1.0	4*	NEPV	28u†	16	3.0	15			20†	100m	160m	50k		FE	None	PY622a Δ
4	T5145-6	1.0	4*	NEPV	30u†	28	4.0	15			20†	75m	75m	50k		FE	None	PY622a Δ
5	T5145G	1.0	4*	NEPV	28u	15	3.0	15			20†	100m	120m	50k		FE	None	PY622a Δ
6	T5145M	1.0	4*	NEPV	28u	29	3.0	15			20†	60m	100m	50k		FE	None	PY622a Δ
7	T5145X	1.0	4*	NEPV	24u	25	9.0	15			20†	80m	40m	50k		FE	None	PY622a Δ
8	3908-01	1.0	4	NR		57	3.0	9.0	30	100	20	30m	45m*	50k		FE	E404a	PY742
9	3908-05	1.0	4	NR		15	3.0	9.0	30	100	20	75m	150m*	50k		FE	E404a	PY742
10	3908-06	1.0	4	NR		19	4.5	13	30	100	20	45m	75m*	50k		FE	E404a	PY742
11	84D5R11H	1.0	4	NRK		15	3.0	12	30	60		80m	120m*			Ref	None ♦	PY1082c
12	84E3R11GH	1.0	4	NRK		48	4.0	15	30	60		20m	45m*			Ref	None ♦	PY1082c
13	84E5R11H	1.0	4	NRK		15	3.0	12	30	60		80m	120m*			Ref	None ♦	PY1082c
14	84E9R11GH	1.0	4	NRK		29	4.0	15	30	60		32m	55m*			Ref	None ♦	PY1082c
15	84R3R11GH	1.0	4	NRK		48	4.0	15	30	60		20m	45m*			Ref	None ♦	PY1082c
16	84R9R11GH	1.0	4	NRK		29	4.0	15	30	60		32m	55m*			Ref	None ♦	PY1082c
17	3125(2)	1.0	5	N	4.0u†	06	4.5	15	30	100	20	120m	120m	50k	11	FE	None	None
18	3135(2)	1.0	5	N	4.0u†	06	4.5	15	30	100	20	120m	120m	50k	11	FE	None	None
19	LC11404650-301.15/1S	1.0	5	NBE	70u†	16	3.0	6.0	30	200	20	40m	80m	100k	11	FE,Ref	None ♦	PY1104
20	LC11404650-301.28/1E	1.0	5	NBE	47u†	28	3.0	6.0	30	200	20	40m	40m	100k	11	FE,Ref	None ♦	PY1104
21	87D5R84H	1.0	5	NRK		15	3.0	12	30	60		80m	120m*			Ref	None ♦	PY1086
22	87E3R84GH	1.0	5	NRK		48	4.0	15	30	60		20m	45m*			Ref	None ♦	PY1086
23	87E5R84H	1.0	5	NRK		15	3.0	12	30	60		80m	120m*			Ref	None ♦	PY1086
24	87E9R84GH	1.0	5	NRK		29	4.0	15	30	60		32m	55m*			Ref	None ♦	PY1086
25	87R3R84GH	1.0	5	NRK		48	4.0	15	30	60		20m	45m*			Ref	None ♦	PY1086
26	87R9R84GH	1.0	5	NRK		29	4.0	15	30	60		32m	55m*			Ref	None ♦	PY1086
27	112F01AA	1.0	6*	N		15	3.0 Δ	12 Δ		32 †					11 %	Reflective	E506c	PY1061
28	112F01AB	1.0	6*	N		15	3.0 Δ	12 Δ		32 †					11 %	Transflective	E506c	PY1061
29	112F01AC	1.0	6*	N		15	3.0 Δ	12 Δ		32 †					11 %	Transmissive	E506c	PY1061
30	112F01AD	1.0	6*	N		15	3.0 Δ	12 Δ		32 †					11 %	Transmissive	E506c	PY1061
31	112F01BF	1.0	6*	N		15	3.0 Δ	12 Δ		32 †					11 %	Reflective	E506c	PY1061
32	112F01BG	1.0	6*	N		15	3.0 Δ	12 Δ		32 †					11 %	Transflective	E506c	PY1061
33	112F01BH	1.0	6*	N		15	3.0 Δ	12 Δ		32 †					11 %	Transmissive	E506c	PY1061
34	112F01BK	1.0	6*	N		15	3.0 Δ	12 Δ		32 †					11 %	Transmissive	E506c	PY1061
35	112F03AA	1.0	6*	N		38	4.0 Δ	12 Δ		32 †					11 %	Reflective	E506c	PY1061
36	112F03AB	1.0	6*	N		38	4.0 Δ	12 Δ		32 †					11 %	Transflective	E506c	PY1061
37	112F03AC	1.0	6*	N		38	4.0 Δ	12 Δ		32 †					11 %	Transmissive	E506c	PY1061
38	112F03AD	1.0	6*	N		38	4.0 Δ	12 Δ		32 †					11 %	Transmissive	E506c	PY1061
39	112F03BF	1.0	6*	N		38	4.0 Δ	12 Δ		32 †					11 %	Reflective	E506c	PY1061
40	112F03BG	1.0	6*	N		38	4.0 Δ	12 Δ		32 †					11 %	Transflective	E506c	PY1061
41	112F03BH	1.0	6*	N		38	4.0 Δ	12 Δ		32 †					11 %	Transmissive	E506c	PY1061
42	112F03BK	1.0	6*	N		38	4.0 Δ	12 Δ		32 †					11 %	Transmissive	E506c	PY1061
43	3126	1.0	6	N	4.0u†	26	5.0	15	30	100	20	80m	60m	50k	11	FE;MPLX	None	None
44	90D5R99H	1.0	6	NRK		15	3.0	12	30	60		80m	120m*			Ref	None ♦	PY1353
45	90E3R99GH	1.0	6	NRK		48	4.0	15	30	60		20m	45m*			Ref	None ♦	PY1353
46	90E5R99H	1.0	6	NRK		15	3.0	12	30	60		80m	120m*			Ref	None ♦	PY1353
47	90E9R99GH	1.0	6	NRK		29	4.0	15	30	60		32m	55m*			Ref	None ♦	PY1353
48	90R3R99GH	1.0	6	NRK		48	4.0	15	30	60		20m	45m*			Ref	None ♦	PY1353
49	90R9R99GH	1.0	6	NRK		29	4.0	15	30	60		32m	55m*			Ref	None ♦	PY1353
50	3222	1.6	2	N	8.0u†	16	4.0	15	30	100	20	100m	100m	50k	10 $	FE	None	None
51	5201-5	2.0	1	NR	28u†	26	3.0	15			20†	50m	50m	50k		Numeric	None	PY593 ☑
52	5201-6	2.0	1	NR	30u†	28	4.0	15			20†	75m	75m	50k		Numeric	None	PY593 ☑
53	3202(2)	2.0	2	N	15u†	16	4.0	15	30	100	20	100m	100m	50k	10 $	FE	None	None
54	3204	2.0	4	N	20u†	06	15	90	30	100	15	200m	200m	50k	10	DS	None	None
55	3205(2)	2	5	N		48	3	18	50	1.0k		100m	100m		%		None	None
56	3206	2.0	6	NC	16u†	06	5.0	15	30	100	20	200m	200m	50k	11	FE	None	None
57	3391	3.0	1	N	30u†	06	15	90	30	100	15	200m	200m	50k	10	DS	None	None
58	5301-5	3.0	1	NR	28u†	26	3.0	15			20†	50m	50m	50k		Numeric	None	PY593a ☑
59	5301-6	3.0	1	NR	30u†	28	4.0	15			20†	75m	75m	50k		Numeric	None	PY593a ☑
60	LC07610110-300.15/1S	3.0	1	NR	146u†	16	3.0	6.0	30	200	20	40m	80m	100k	11	FE,Ref	None ♦	PY822
61	LC07610110-300.28/1E	3.0	1	NR	97u†	28	3.0	6.0	30	200	20	40m	40m	100k	11	FE,Ref	None ♦	PY822
62	3203	3.0	3	N	20u†	06	15	90	30	100	15	200m	200m	50k	10	DS	None	None
63	3233-9	3.0	3	N	20u†	06	5.0	15	30	100	20	100m	100m	50k	11	FE;DS SUBLIM	None	None
64	3344	3	4	C		48	3	18	50	1.0k		100m	100m		%		None	None
65	4344	3	4	N		48	3	18	50	1.0k		100m	100m		%		None	None
66	3345	3	5	N		48	3	18	50	1.0k		100m	100m		%		None	None
67	4345	3	5	N		48	3	18	50	1.0k		100m	100m		%		None	None
68	3306	3.0	6	N	30u†	06	5.0	15	30	100	20	200m	200m	50k	10 $	FE;DS	None	None

DISPLAY, LCD SEGMENTED ALPHANUMERIC

72	6496	.16		G		06	3	30	50	200		50m	1.0		%	DS/Ref/Trf	None	None †
73	350E3R99GH	275m	8	A		48	4.0	15	30	60		20m	45m*			Ref	None ♦	PY1352b
74	350E3R99H	275m	8	A		48	4.0	15	30	60		20m	45m*			Ref	None ♦	PY1352b
75	350E8R99H	275m	8	A		26	3.0	12	30	60		32m	91m*			Ref	None ♦	PY1352b
76	FRD0196	276m	8	AE		04	2.7	3.3	50	500		120m	60m	50k	11 %		None	PY1266
77	FRD1266	276m	8	AM		55		3.1 †				50m	70m	50k	11 %	Rubber Conn	None	PY1305
78	FRD0180	276m	16	AE		04	2.7	3.3	50	500		120m	60m	50k	11 %		None	PY1267
79	FRD1352P	276m	16	AM		55		3.1 †				50m	70m	50k	11 %	Pin Conn	None	PY1307
80	SX459-5	.31	8	NL	28u	16	3.0	15			20†	100m	160m	50k			None	PY657 Δ
81	SX459G	.31	8	NL	28u	15	3.0	15			20†	100m	120m	50k			None	PY657 Δ
82	SX459M	.31	8	NL	28u	29	3.0	15			20†	60m	100m	50k			None	PY657 Δ
83	SX459X	.31	8	NL	24u	25	9.0	15			20†	80m	40m	50k			None	PY657 Δ
84	LTC1160HS	.35	8	AE		26	3.5	8.0	30	100	18	60m	95m*			Trf	None ♦	PY1023
85	LTC1160HW	.35	8	AE		28	3.5	8.0	30	100	10	60m	95m*			Trf	None ♦	PY1023
86	LTC1160RS	.35	8	AE		26	3.5	8.0	30	100	18	60m	95m*			Ref	None ♦	PY1023
87	LTC1160RW	.35	8	AE		28	3.5	8.0	30	100	10	60m	95m*			Ref	None ♦	PY1023
88	LTC1160TS	.35	8	AE		26	3.5	8.0	30	100	18	60m	95m*			Trn	None ♦	PY1023
89	LTC1160TW	.35	8	AE		28	3.5	8.0	30	100	10	60m	95m*			Trn	None ♦	PY1023
90	LTC1160XS	.35	8	AE		26	3.5	8.0	30	100	18	60m	95m*			No polar	None ♦	PY1023
91	LTC1160XW	.35	8	AE		28	3.5	8.0	30	100	10	60m	95m*			No polar	None ♦	PY1023
92	LTC1421HS	.35	8	AE		26	3.5	8.0	30	100	18	60m	95m*			Trf	None ♦	PY1024
93	LTC1421HW	.35	8	AE		28	3.5	8.0	30	100	10	60m	95m*			Trf	None ♦	PY1024
94	LTC1421RS	.35	8	AE		26	3.5	8.0	30	100	18	60m	95m*			Ref	None ♦	PY1024
95	LTC1421RW	.35	8	AE		28	3.5	8.0	30	100	10	60m	95m*			Ref	None ♦	PY1024
96	LTC1421TS	.35	8	AE		26	3.5	8.0	30	100	18	60m	95m*			Trn	None ♦	PY1024
97	LTC1421TW	.35	8	AE		26	3.5	8.0	30	100	18	60m	95m*			Trn	None ♦	PY1024
98	LTC1421XS	.35	8	AE		26	3.5	8.0	30	100	18	60m	95m*			No polar	None ♦	PY1024
99	LTC1421XW	.35	8	AE		28	3.5	8.0	30	100	10	60m	95m*			No polar	None ♦	PY1024
100	FLB8009A1	.35	8	AK		26	2.8	12	30	1.0k	20	150m	150m*	50k			EB1308a	PY994
101	FLB8009B1	.35	8	AK		26	2.8	12	30	1.0k	20	150m	150m*	50k			EB1308a	PY994
102	FLB8009C1	.35	8	AK		26	2.8	12	30	1.0k	20	150m	150m*	50k			EB1308a	PY994
103	FLB8009D1	.35	8	AK		26	2.8	12	30	1.0k	20	150m	150m*	50k			EB1308a	PY994
104	107F07AA	492m	8	A		15	1.9 Δ					35m	80m		11 %	Reflective	EB528a	PY910 ☑
105	107F07AB	492m	8	A		15	1.9 Δ					35m	80m		11 %	Transflective	EB528a	PY910 ☑
106	107F07AC	492m	8	A		15	1.9 Δ					35m	80m		11 %	Transmissive	EB528a	PY910 ☑

SYMBOLS AND CODES EXPLAINED IN INTERPRETER

36. LCD DISPLAYS - Segmented Alphanumeric (Cont'd)

IN ORDER OF FONT AND: (1) CHAR. HEIGHT (2) No CHAR. (3) PWR CONSUMP & (4)TYPE No.

LINE No.	4 TYPE NUMBER	1 CHAR. HGHT. (in)	2 NO. CHAR	NOMEN	3 MAX. PWR. CONS. Δ-/seg (W)	TEMP RNG. CODE	OPERATING VOLTAGE MIN. VOLT (V)	MAX. VOLT (V)	FREQ. MIN. (Hz)	FREQ. MAX. (Hz)	CONTRAST RATIO	RISE TIME tr (s)	DECAY TIME tf (s)	LIFE (hrs)	COL -OR	FEATURES	SCHE-MATIC	DRAWING
1	107F07AD	492m	8	A		15	1.9 Δ					35m	80m		11 %	Transmissive	EB528a	PY910 ⊠
2	5832	.5		G		06	3	30	50	200		50m	1.0		%	DS/Ref/Trf	None	None †
3	SX228-5	.50	3	N	28u	16	3.0	15			20†	100m	160m	50k			None	PY874 Δ
4	SX228G	.50	3	N	28u	15	3.0	15			20†	100m	120m	50k			None	PY874 Δ
5	SX228M	.50	3	N	28u	29	3.0	15			20†	60m	100m	50k			None	PY874 Δ
6	SX228X	.50	3	N	24u	25	9.0	15			20†	80m	40m	50k			None	PY874 Δ
7	3947-210	500m	4	A		15	4.0	17	30	100	20†	75m	150m*	50k	*	Trn	EB664a	PY331
8	3947-312	500m	4	A		15	4.0	17	30	100	20†	75m	150m*	50k	11	Trf	EB664a	PY331
9	3947-313	500m	4	A		15	4.0	17	30	100	20†	75m	150m*	50k	11	Ref	EB664a	PY331
10	SX227-5	.50	4	N	28u	16	3.0	15			20†	100m	160m	50k			None	PY331 Δ
11	SX227G	.50	4	N	28u	15	3.0	15			20†	100m	120m	50k			None	PY331 Δ
12	SX227M	.50	4	N	28u	29	3.0	15			20†	60m	100m	50k			None	PY331 Δ
13	SX227X	.50	4	N	24u	25	9.0	15			20†	80m	40m	50k			None	PY331 Δ
14	76D3R09H	500m	8	A		48	4.0	15	30	60		20m	45m*			Ref	None ♦	PY1352
15	76D8R09H	500m	8	A		26	3.0	12	30	60		32m	91m*			Ref	None ♦	PY1352
16	76E3R09GH	500m	8	A		48	4.0	15	30	60		20m	45m*			Ref	None ♦	PY1352
17	76E3R09H	500m	8	A		48	4.0	15	30	60		20m	45m*			Ref	None ♦	PY1352
18	76E8R09H	500m	8	A		26	3.0	12	30	60		32m	91m*			Ref	None ♦	PY1352
19	76R3R09GH	500m	8	A		48	4.0	15	30	60		20m	45m*			Ref	None ♦	PY1352
20	SX526G	.50	8	ADK		15	1.8	2.5			20	350m	350m	50k		Elastomeric	None ♦	PY991
21	SX526H	.50	8	ADK		38	2.0	2.8			20	100m	100m	50k		Elastomeric	None ♦	PY991
22	SX616G	.50	8	ADK		15	1.8	2.5			20	350m	350m	50k		Pinned	None ♦	PY991
23	SX616H	.50	8	ADK		38	2.0	2.8			20	100m	100m	50k		Pinned	None ♦	PY991
24	SX217-5	.50	12	NL	28u	16	3.0	15			20†	100m	160m	50k			None	PY875 Δ
25	SX217G	.50	12	NL	28u	15	3.0	15			20†	100m	120m	50k			None	PY875 Δ
26	SX217M	.50	12	NL	28u	29	3.0	15			20†	60m	100m	50k			None	PY875 Δ
27	SX217X	.50	12	NL	24u	25	9.0	15			20†	80m	40m	50k			None	PY875 Δ
28	54216	.5	16	G		06	3	30	50	200		50m	1.0		%	DS/Ref/Trf	None	None †
29	77D3R10H	700m	4	A		48	4.0	15	30	60		20m	45m*			Ref	None ♦	PY1352a
30	77D8R10H	700m	4	A		26	3.0	12	30	60		32m	91m*			Ref	None ♦	PY1352a
31	77E3R10GH	700m	4	A		48	4.0	15	30	60		20m	45m*			Ref	None ♦	PY1352a
32	77E3R10H	700m	4	A		48	4.0	15	30	60		20m	45m*			Ref	None ♦	PY1352a
33	77E8R10H	700m	4	A		26	3.0	12	30	60		32m	91m*			Ref	None ♦	PY1352a
34	77R3R10GH	700m	4	A		48	4.0	15	30	60		20m	45m*			Ref	None ♦	PY1352a
35	78D5F10	700m	4	A		15	3	12	30	60		80m	120m		%	Trf	None ♦	PY1090
36	78D5R10H	700m	4	A		15	3.0	12	30	60		80m	120m*			Ref	None ♦	PY1090
37	78E3R10GH	700m	4	A		48	4.0	15	30	60		20m	45m*			Ref	None ♦	PY1090
38	78E5R10H	700m	4	A		15	3.0	12	30	60		80m	120m*			Ref	None ♦	PY1090
39	78E9R10GH	700m	4	A		29	4.0	15	30	60		32m	55m*			Ref	None ♦	PY1090
40	78R3R10GH	700m	4	A		48	4.0	15	30	60		20m	45m*			Ref	None ♦	PY1090
41	78R9R10GH	700m	4	A		29	4.0	15	30	60		32m	55m*			Ref	None ♦	PY1090
42	SX423-5	.70	4	N	28u	16	3.0	15			20†	100m	160m	50k			None	PY404 Δ
43	SX423G	.70	4	N	28u	15	3.0	15			20†	100m	120m	50k			None	PY404 Δ
44	SX423M	.70	4	N	28u	29	3.0	15			20†	60m	100m	50k			None	PY404 Δ
45	SX423X	.70	4	N	24u	25	9.0	15			20†	80m	40m	50k			None	PY404 Δ
46	SX218-5	.75	10	N	28u	16	3.0	15			20†	100m	160m	50k			None	PY876 Δ
47	SX218G	.75	10	N	28u	15	3.0	15			20†	100m	120m	50k			None	PY876 Δ
48	SX218M	.75	10	N	28u	29	3.0	15			20†	60m	100m	50k			None	PY876 Δ
49	SX218X	.75	10	N	24u	25	9.0	15			20†	80m	40m	50k			None	PY876 Δ
50	4134(2)	1.0	4	A	1.0u†	06	5.0	15	30	100	20	100m	100m	50k	10 $	FE;DS	None	None
51	SX416-5	1.4	1	A	28u	16	3.0	15			20†	100m	160m	50k			None	PY886 Δ
52	SX416G	1.4	1	A	28u	15	3.0	15			20†	100m	120m	50k			None	PY886 Δ
53	SX416M	1.4	1	A	28u	29	3.0	15			20†	60m	100m	50k			None	PY886 Δ
54	SX416X	1.4	1	A	24u	25	9.0	15			20†	80m	40m	50k			None	PY886 Δ
55	5201A5	2.0	1	A	28u†	26	3.0	15			20†	50m	50m	50k		Alpha	None	PY594 ⊠
56	5201A6	2.0	1	A	30u†	28	4.0	15			20†	75m	75m	50k		Alpha	None	PY594 ⊠
57	4301(2)	3.0	1	A	30u†	06	15	90	30	100	15	200m	200m	50k	10	DS	None	None
58	5301A5	3.0	1	A	28u†	26	3.0	15			20†	50m	50m	50k		Alpha	None	PY594a ⊠
59	5301A6	3.0	1	A	30u†	28	4.0	15			20†	75m	75m	50k		Alpha	None	PY594a ⊠

DISPLAY, LCD 5x7 DOT MATRIX

63	56016			A	300n†	26	1.8	10	30	100	20	50m	70m	10k	11	FE	None	None
64	114M			GE		05		5.5									EB1432ZZ	PY1197
65	115M			GE		05		5.5									EB1432ZZ	PY1196
66	AND1811		16	AE	30m	05		5.0									EB2616ZZ	PY984
67	AND1861		40	AE	30m	05		5.0									EB3040ZZ	PY983
68	SX399-5	.17	8	A	28u	16	3.0	15			20†	100m	160m	50k			None	PY877 Δ
69	SX399G	.17	8	A	28u	15	3.0	15			20†	100m	120m	50k			None	PY877 Δ
70	SX399M	.17	8	A	28u	29	3.0	15		0	20†	60m	100m	50k			None	PY877 Δ
71	SX399X	.17	8	A	24u	25	9.0	15			20†	80m	40m	50k			None	PY877 Δ
72	FE0602THB	.17	40	AEM		05		10 Δ		120 $	5.0	520m	600m	50k	6	Ref	None ♦	PY799
73	FE0404F	173m	13			04	431mΔ	10 Δ	10 †	120 †	5†	150m	150m	50k	265	Transmissive	None ♦	PY798
74	FE0602F	173m	40			04	431mΔ	10 Δ		120 †	5†	150m	150m	50k	265	Transmissive	None ♦	PY799
75	FRD7058	219m	*			27%		4.8 †				150m	150m	50k	11 %	32x2 Char	None	PY1313
76	FRD7069	219m	*			27%		5.0 †				150m	150m	50k	11 %		None	None
77	DMC32216	219m		AE	22m	05		7.0			6.0Ø	120m	120m			32x2;RAM/ROM	None ♦	PY1324e
78	DMC40218	219m		AE	15m	05		7.0			6.0Ø	120m	120m			40x2;RAM,ROM	None ♦	PY1324g
79	FRD7047	219m	32			27%		5.0 †				150m	150m	50k	11 %	16x2 Char	None	PY1311
80	DMC16207	219m	32	AE	12m	05		7.0			6.0Ø	120m	120m			Int RAM/ROM	None ♦	PY1324c
81	FRD7057	219m	40			27%		5.0 †				150m	150m	50k	11 %	20x2 Char	None	PY1312
82	DMC20215	219m	40	AE	12m	05		7.0			6.0Ø	120m	120m			Int RAM/ROM	None ♦	PY1324d
83	PCIM206	.22		AE		05	0	5.0							11	2x40 w/Logic	EB1440ZZ	PY1328
84	LCD522-01	.22	32	A		27	4.4 †				4†	150m	150m				None	PY1572a
85	LCM522-01A	.22	32	E		05	5.0 †	13									None	PY1584a
86	LCD523-01	.22	48	A		27	4.4 †				4†	150m	150m				None	PY1572
87	LCM523-01A	.22	48	E		05	5.0 †	13									None	PY1584b
88	LCD524-01	.22	80	A		27	4.4 †				4†	150m	150m				None	PY1572b
89	LCM524-01A	.22	80	E		05	5.0 †	13									None	PY1584c
90	PCIM200	.23	16	GE	55m	05	0	5.0	0		7.5†	100m	150m	50k	11	One Line	EC1316ZZ	PY1039
91	PCIM201	.23	32	GE	55m	05	4.5	5.5	0		10	100m	150m	50k	11	Two Line	EC1332ZZ	PY1040
92	FRD7062	234m	16			27%		4.0 †				140m	60m	50k	11 %		None	None
93	FRD7070	234m	16			27%		5.0 †				150m	150m	50k	11 %		None	None
94	DMC16106C	234m	16	AE	10m	05		7.0			10Ø	100m	100m			Int RAM/ROM	None ♦	PY1324
95	DMC16117	234m	16	AE	10m	05		7.0			6.0Ø	120m	120m			Int RAM/ROM	None ♦	PY1324b
96	FRD7037	238m	*			27%		9.0 †				150m	110m	50k	11 %	40x4 w/Cursor	None	PY1315
97	FRD7038	238m	*			27%		5.0 †				150m	150m	50k	11 %	40x2 w/Cursor	None	PY1314
98	DMC40209	238m		AE	27m	05		7.0			6.0Ø	120m	120m			40x2;RAM,ROM	None ♦	PY1324f
99	MB7030320	.24	32	A		23	4.7	5.2						50k	11		None ♦	PY1509
100	SX147-5	250m	8	A	12u†	16	3.0	15			20†	100m	160m	50k			None	PY595 Δ
101	SX147-6	250m	8	A	16u†	18	4.0	15			20†	75m	75m	50k			None	PY595 Δ
102	SX147G	.25	8	A	28u	15	3.0	15			20†	100m	120m	50k			None	PY595 Δ
103	SX147M	.25	8	A	28u	29	3.0	15			20†	60m	100m	50k			None	PY595 Δ
104	SX147X	.25	8	A	24u	25	9.0	15			20†	80m	40m	50k			None	PY595 Δ
105	SX221-5	.25	8	A	28u	16	3.0	15			20†	100m	160m	50k			None	PY878 Δ
106	SX221G	.25	8	A	28u	15	3.0	15			20†	100m	120m	50k			None	PY878 Δ
107	SX221M	.25	8	A	28u	29	3.0	15			20†	60m	100m	50k			None	PY878 Δ
108	SX221X	.25	8	A	24u	25	9.0	15			20†	80m	40m	50k			None	PY878 Δ
109	SX296-5	.26	16	A	28u	16	3.0	15			20†	100m	160m	50k			None	PY880 Δ
110	SX296G	.26	16	A	28u	15	3.0	15			20†	100m	120m	50k			None	PY880 Δ

SYMBOLS AND CODES EXPLAINED IN INTERPRETER

36. LCD DISPLAYS - 5x7 Dot Matrix (Cont'd)

IN ORDER OF FONT AND: (1) CHAR. HEIGHT (2) No CHAR. (3) PWR CONSUMP & (4)TYPE No.

LINE No.	4 TYPE NUMBER	1 CHAR. HGHT. (in)	2 NO. CHAR	NOMEN	3 MAX. PWR. CONS. Δ-/seg (W)	TEMP RNG. CODE - +	OPERATING VOLTAGE MIN. VOLT (V)	MAX. VOLT (V)	FREQ. MIN. (Hz)	FREQ. MAX. (Hz)	CONTRAST RATIO	RISE TIME tr (s)	DECAY TIME tf (s)	LIFE (hrs)	COL -OR	FEATURES	SCHE-MATIC	DRAWING
1	SX296M	.26	16	A	28u	29	3.0	15			20†	60m	100m	50k			None	PY880 Δ
2	SX296X	.26	16	A	24u	25	9.0	15			20†	80m	40m	50k			None	PY880 Δ
3	347D3R99H	262m	8	A		48	4.0	15	30	60		20m	45m*			Ref	None ♦	PY1355
4	347D8R99H	262m	8	A		26	3.0	12	30	60		32m	91m*			Ref	None ♦	PY1355
5	347E3R99GH	262m	8	A		48	4.0	15	30	60		20m	45m*			Ref	None ♦	PY1355
6	347E3R99H	262m	8	A		48	4.0	15	30	60		20m	45m*			Ref	None ♦	PY1355
7	347E8R99H	262m	8	A		26	3.0	12	30	60		32m	91m*			Ref	None ♦	PY1355
8	347R3R99H	262m	8	A		48	4.0	15	30	60		20m	45m*			Ref	None ♦	PY1355
9	AND651	.28	*	AE	400m	05		5.0			5.0	150m	150m			160char	EB63	PY982
10	SX469-5	.28	20	A	28u	16	3.0	15			20†	100m	160m	50k			None	PY882 Δ
11	SX469G	.28	20	A	28u	15	3.0	15			20†	100m	120m	50k			None	PY882 Δ
12	SX469M	.28	20	A	28u	29	3.0	15			20†	60m	100m	50k			None	PY882 Δ
13	SX469X	.28	20	A	24u	25	9.0	15			20†	80m	40m	50k			None	PY882 Δ
14	SX208G	.28	32	A	28u	15	3.0	15			20†	100m	120m	50k			None	PY595a Δ
15	SX208M	.28	32	A	28u	29	3.0	15			20†	60m	100m	50k			None	PY595a Δ
16	SX208X	.28	32	A	24u	25	9.0	15			20†	80m	40m	50k			None	PY595a Δ
17	SX208-5	284m	32	A	12u†	16	5.0 †				20†	100m	160m	50k			None	PY595a Δ
18	SX208-6	284m	32	A	16u†	18	5.0 †				20†	75m	75m	50k			None	PY595a Δ
19	PCIM202	.29	32	GE		05	0	5.0			7.5†				11	w/Logic	EC1332ZZ	PY1328
20	SX471-5	.29	40	A	28u	16	3.0	15			20†	100m	160m	50k			None	PY884 Δ
21	SX471G	.29	40	A	28u	15	3.0	15			20†	100m	120m	50k			None	PY884 Δ
22	SX471M	.29	40	A	28u	29	3.0	15			20†	60m	100m	50k			None	PY884 Δ
23	SX471X	.29	40	A	24u	25	9.0	15			20†	80m	40m	50k			None	PY884 Δ
24	93D3R31H	300m	8	A		48	4.0	15	30	60		20m	45m*			Ref	None ♦	PY1097
25	93D8R31H	300m	8	A		26	3.0	12	30	60		32m	91m*			Ref	None ♦	PY1097
26	93E3R31GH	300m	8	A		48	4.0	15	30	60		20m	45m*			Ref	None ♦	PY1097
27	93E3R31H	300m	8	A		48	4.0	15	30	60		20m	45m*			Ref	None ♦	PY1097
28	93E8R31H	300m	8	A		26	3.0	12	30	60		32m	91m*			Ref	None ♦	PY1097
29	93R3R31GH	300m	8	A		48	4.0	15	30	60		20m	45m*			Ref	None ♦	PY1097
30	94D3R32H	300m	16	A		48	4.0	15	30	60		20m	45m*			Ref	None ♦	PY1098
31	94D8R32H	300m	16	A		26	3.0	12	30	60		32m	91m*			Ref	None ♦	PY1098
32	94E3R32GH	300m	16	A		48	4.0	15	30	60		20m	45m*			Ref	None ♦	PY1098
33	94E3R32H	300m	16	A		48	4.0	15	30	60		20m	45m*			Ref	None ♦	PY1098
34	94E8R32H	300m	16	A		26	3.0	12	30	60		32m	91m*			Ref	None ♦	PY1098
35	94R3R32GH	300m	16	A		48	4.0	15	30	60		20m	45m*			Ref	None ♦	PY1098
36	85030-16X-XA	300m	16	A		58	2.6	10	30	100	20†	80m	110n				None	PY1245
37	85030-16X-XC	300m	16	A		48	3.0	10	30	100	20†	90m	110n				None	PY1245
38	85030-16X-XD	300m	16	A		26	3.0 †		30	100	20†	100m	130n				None	PY1245
39	85030-16X-XM	300m	16	A		26	4.5	5.5	30	100	10†	50m	80n				None	PY1245
40	85030-16X-XQ	300m	16	A		25	3.0 †		30	100	18†	90m	120m				None	PY1245
41	LC9430160-344.15/0S	.30	16	X		15	3.7	4.0	30	100	20	270m	80m	100	11	FE,Ref,Mux1:8	None ♦	PY1107
42	LC9430160-344.28/0E	.30	16	X		27	5.2	5.5	30	100	20	150m	70m	100	11	FE,Ref,Mux1:8	None ♦	PY1107
43	99D3R99H	300m	20	A		48	4.0	15	30	60		20m	45m*			Ref	None ♦	PY1354
44	99D8R99H	300m	20	A		26	3.0	12	30	60		32m	91m*			Ref	None ♦	PY1354
45	99E3R99GH	300m	20	A		48	4.0	15	30	60		20m	45m*			Ref	None ♦	PY1354
46	99E3R99H	300m	20	A		48	4.0	15	30	60		20m	45m*			Ref	None ♦	PY1354
47	99E8R99H	300m	20	A		26	3.0	12	30	60		32m	91m*			Ref	None ♦	PY1354
48	99R3R99GH	300m	20	A		48	4.0	15	30	60		20m	45m*			Ref	None ♦	PY1354
49	96E3R33GH	300m	32	A		48	4.0	15	30	60		20m	45m*			Ref	None ♦	PY1099
50	96E3R33H	300m	32	A		48	4.0	15	30	60		20m	45m*			Ref	None ♦	PY1099
51	96E8R33H	300m	32	A		26	3.0	12	30	60		32m	91m*			Ref	None ♦	PY1099
52	95030-32X-XA	300m	32	A		58	2.6	10	30	100	20†	80m	110m				None	PY1246
53	95030-32X-XC	300m	32	A		48	3.0	10	30	100	20†	90m	110m				None	PY1246
54	95030-32X-XD	300m	32	A		26	3.0 †		30	100	20†	100m	130m				None	PY1246
55	95030-32X-XM	300m	32	A		26	4.5	5.5	30	100	10†	50m	80m				None	PY1246
56	95030-32X-XQ	300m	32	A		25	3.0 †		30	100	18†	90m	120m				None	PY1246
57	FRD7036	374m	16			27%		4.0 †				140m	60m	50k	11 %	w/Cursor	None	PY1309
58	DMC16106B	374m	16	AE	10m	05		7.0			10Ø	100m	100m			Int RAM/ROM	None ♦	PY1324a
59	5626-31	400m	6	A	700n†	26	4.0	15	30	100	20	80m	60m	10k	11	FE;8x30 W/Dot	None	None
60	5832-32	500m		A	100n†	26	1.5	8.0	30	100	20	50m	50m	10k	11	FE;MATRIX	None	None
61	SX287-5	.58	32	A	28u	16	3.0	15			20†	100m	160m	50k			None	PY881 Δ
62	SX287G	.58	32	A	28u	15	3.0	15			20†	100m	120m	50k			None	PY881 Δ
63	SX287M	.58	32	A	28u	29	3.0	15			20†	60m	100m	50k			None	PY881 Δ
64	SX287X	.58	32	A	24u	25	9.0	15			20†	80m	40m	50k			None	PY881 Δ
65	SX376-5	.64	64	A	28u	16	3.0	15			20†	100m	160m	50k			None	PY883 Δ
66	SX376G	.64	64	A	28u	15	3.0	15			20†	100m	120m	50k			None	PY883 Δ
67	SX376M	.64	64	A	28u	29	3.0	15			20†	60m	100m	50k			None	PY883 Δ
68	SX376X	.64	64	A	24u	25	9.0	15			20†	80m	40m	50k			None	PY883 Δ
69	SX454-5	.82	6	A	28u	16	3.0	15			20†	100m	160m	50k			None	PY879 Δ
70	SX454G	.82	6	A	28u	15	3.0	15			20†	100m	120m	50k			None	PY879 Δ
71	SX454M	.82	6	A	28u	29	3.0	15			20†	60m	100m	50k			None	PY879 Δ
72	SX454X	.82	6	A	24u	25	9.0	15			20†	80m	40m	50k			None	PY879 Δ
73	HX845800-380	2.36	1	X		27	4.0	4.5			20	40m	50m	50k	11	w/Logic	EB341ZZ	PY1459
74	117M	2.36	1.5	FE		17	4.0	10									EB121ZZ	PY1199
75	117F01AA	2.5	1*	A		15	3.0 Δ	12 Δ		32 †					11 %	Reflective	EB401a	PY1220
76	117F01AB	2.5	1*	A		15	3.0 Δ	12 Δ		32 †					11 %	Transflective	EB401a	PY1220
77	117F01AC	2.5	1*	A		15	3.0 Δ	12 Δ		32 †					11 %	Transmissive	EB401a	PY1220
78	117F01AD	2.5	1*	A		15	3.0 Δ	12 Δ		32 †					11 %	Transmissive	EB401a	PY1220
79	117F01BF	2.5	1*	A		15	3.0 Δ	12 Δ		32 †					11 %	Reflective	EB401a	PY1220
80	117F01BG	2.5	1*	A		15	3.0 Δ	12 Δ		32 †					11 %	Transflective	EB401a	PY1220
81	117F01BH	2.5	1*	A		15	3.0 Δ	12 Δ		32 †					11 %	Transmissive	EB401a	PY1220
82	117F01BK	2.5	1*	A		15	3.0 Δ	12 Δ		32 †					11 %	Transmissive	EB401a	PY1220
83	117F03AA	2.5	1*	A		15	4.0 Δ	12 Δ		32 †					11 %	Reflective	EB401a	PY1220
84	117F03AB	2.5	1*	A		15	4.0 Δ	12 Δ		32 †					11 %	Transflective	EB401a	PY1220
85	117F03AC	2.5	1*	A		15	4.0 Δ	12 Δ		32 †					11 %	Transmissive	EB401a	PY1220
86	117F03AD	2.5	1*	A		15	4.0 Δ	12 Δ		32 †					11 %	Transmissive	EB401a	PY1220
87	117F03BF	2.5	1*	A		15	4.0 Δ	12 Δ		32 †					11 %	Reflective	EB401a	PY1220
88	117F03BG	2.5	1*	A		15	4.0 Δ	12 Δ		32 †					11 %	Transflective	EB401a	PY1220
89	117F03BH	2.5	1*	A		15	4.0 Δ	12 Δ		32 †					11 %	Transmissive	EB401a	PY1220
90	117F03BK	2.5	1*	A		15	4.0 Δ	12 Δ		32 †					11 %	Transmissive	EB401a	PY1220
91	LC518000-300.15/1S	2.6	1	G		16	3.0	6.0	30	200		40m	80m	100k	11	Ref	None ♦	PY1491
92	LC518000-300.28/1E	2.6	1	G		28	3.0	6.0	30	200		40m	40m	100k	11	Ref	None ♦	PY1491
93	6464	3.0		A	100n†	26	1.5	8.0	30	100	20	80m	60m	10k	11		None	None
94	5371	3.0	1	A	25u†	06	15	90	30	100	15	200m	200m	50k	10	DS	None	None
95	HX10607600-380	3.15	1	X		27	4.0	4.5			20	40m	50m	50k	11	w/Logic	EB341ZZ	PY1460

DISPLAY, LCD OTHER CONFIGURATION MATRIX

99	FRD7004					27%		9.0 †				150m	110m	50k	11 %		None	PY1316
100	DMF605			X	120m	05	0.3	7.0								128x480	None	PY1326
101	DMF606			X	130m	05	0.3	7.0								200x640	None	PY1327
102	DMF608			X	100m	05	0.3	7.0								128x160	None	PY1325
103	FRD7065			X		27%		12 †				190m	160m	50k	11 %	240x64	None	PY1318
104	FRD7066			X		27%		9.0 †				150m	110m	50k	11 %	160x32	None	PY1317
105	LM052L	.15	16	X	15m	25		5.0									None	None
106	LM016	.19	16	X	15m	25		5.0									None	None

SYMBOLS AND CODES EXPLAINED IN INTERPRETER

36. LCD DISPLAYS - Other Configuration Matrix (Cont'd)

IN ORDER OF FONT AND: (1) CHAR. HEIGHT (2) No CHAR. (3) PWR CONSUMP & (4)TYPE No.

LINE No.	4 TYPE NUMBER	1 CHAR. HGHT. (in)	2 NO. CHAR	NOMEN	3 MAX. PWR. CONS. Δ-/seg (W)	TEMP RNG. CODE	OPERATING VOLTAGE MIN. VOLT - + (V)	MAX. VOLT (V)	FREQ. MIN. (Hz)	FREQ. MAX. (Hz)	CONTRAST RATIO	RISE TIME tr (s)	DECAY TIME tf (s)	LIFE (hrs)	COL -OR	FEATURES	SCHE-MATIC	DRAWING
1	LM016L	.19	16	X	15m	25		5.0									None	None
2	LTR1401HS	.20	1	AE		26	3.5	8.0	30	100	18	60m	95m*			Trf	None ♦	PY1022
3	LTR1401HW	.20	1	AE		28	3.5	8.0	30	100	10	60m	95m*			Trf	None ♦	PY1022
4	LTR1401RS	.20	1	AE		26	3.5	8.0	30	100	18	60m	95m*			Ref	None ♦	PY1022
5	LTR1401RW	.20	1	AE		28	3.5	8.0	30	100	10	60m	95m*			Ref	None ♦	PY1022
6	LTR1401TS	.20	1	AE		26	3.5	8.0	30	100	18	60m	95m*			Trn	None ♦	PY1022
7	LTR1401TW	.20	1	AE		28	3.5	8.0	30	100	10	60m	95m*			Trn	None ♦	PY1022
8	LTR1401XS	.20	1	AE		26	3.5	8.0	30	100	18	60m	95m*			No polar	None ♦	PY1022
9	LTR1401XW	.20	1	AE		28	3.5	8.0	30	100	10	60m	95m*			No polar	None ♦	PY1022
10	LM015	.21	16	X	10m	25		5.0									None	None
11	LM020	.22	16	X	10m	25		5.0									None	None
12	LM020L	.22	16	X	10m	25		5.0									None	None
13	LC7030160-340.15/0S	.28	16	X		16	3.8	4.8	30	90	10	100m	190m	100k	11	Ref;5x10;5x7	None	PY1469
14	H2570	.31	16	X	10m	25		5.0									None	None
15	LM027	.31	24	X	10m	25		5.0									None	None
16	H2571	.31	32	X	10m	25		5.0									None	None
17	H2572	.31	40	X	10m	25		5.0									None	None
18	FRD7056	323m	16			27%		5.0 †						50k	11 %		None	None
19	DMC16106A	323m	16	AE	10m	05		7.0			8.0Ø	120m	120m			Int RAM/ROM	None ♦	PY1324
20	MB7030160	.33	16	A		13	4.7	5.2						50k	11		None ♦	PY1508
21	LCD512-01	.34	16	A		27	3.9 †				5†	150m	150m				None	PY ☑
22	LCM512-01A	.34	16	E		05	5.0 †	13									None	PY1584a
23	LCD513-01	.34	24	A		27	3.9 †				5†	150m	150m				None	PY ☑
24	LCM513-01A	.34	24	E		05	5.0 †	13									None	PY1584b
25	LCD514-01	.34	40	A		27	3.9 †				5†	150m	150m				None	PY1569
26	PCIM205	.34	40	AE		05	0	5.0							11	1x40 w/Logic	EB1440ZZ	PY1328
27	LCM514-01A	.34	40	E		05	5.0 †	13									None	PY1584c
28	FRD7043	344m	16			27%		5.0 †						50k	11 %		None	PY1310
29	LM054	.37	8	X	10m	25		5.0									None	None
30	LM038	.37	20	X	10m	25		5.0									None	None
31	393D3R99H	500m	*			48	4.0	15	30	60		20m	45m*			Ref	None ♦	PY1356
32	393D8R99H	500m	*			26	3.0	12	30	60		32m	91m*			Ref	None ♦	PY1356
33	393E3R99GH	500m	*			48	4.0	15	30	60		20m	45m*			Ref	None ♦	PY1356
34	393E3R99H	500m	*			48	4.0	15	30	60		20m	45m*			Ref	None ♦	PY1356
35	393E8R99H	500m	*			26	3.0	12	30	60		32m	91m*			Ref	None ♦	PY1356
36	SX402-5	1.4	1	A	28u	16	3.0	15			20†	100m	160m	50k			None	PY885 Δ
37	SX402G	1.4	1	A	28u	15	3.0	15			20†	100m	120m	50k			None	PY885 Δ
38	SX402M	1.4	1	A	28u	29	3.0	15			20†	60m	100m	50k			None	PY885 Δ
39	SX402X	1.4	1	A	24u	25	9.0	15			20†	80m	40m	50k			None	PY885 Δ
40	HX106076(A)	3.15	1	A		27	3.9	4.5			20	40m	60m	50k	11	CHIP ON GLASS	EB341ZZ	PY1077

DISPLAY, LCD BAR GRAPH

44	5.346		§	§		Y8	3	18	50	1.0k		100m	100m		%	Ref/Trf	None	None †
45	2018.2		§	§		48	3	18	50	1.0k		100m	100m		%	Ref/Trf	None	None †
46	2020-29		§			06	3	30	50	200		50m	10		%	DS/Ref/Trf	None	None †
47	2032		§	§		48	3	18	50	1.0k		100m	100m		%	Ref/Trf	None	None †
48	2050(2)		§	§		48	3	18	50	1.0k		100m	100m		%	Ref/Trf	None	None †
49	2050.2		§	§		48	3	18	50	1.0k		100m	100m		%	Ref/Trf	None	None †
50	2100(2)		§	§		Y8	3	18	50	1.0k		100m	100m		%	Ref/Trf	None	None †
51	2322-4		§	§		48	3	18	50	1.0k		100m	100m		%	Ref/Trf	None	None †
52	2600		§			48	3	18	50	1.0k		100m	100m		%	Ref/Trf	None	None †
53	5040(2)		§	§		Y8	3	18	50	1.0k		100m	100m		%	Ref/Trf	None	None †
54	5061(2)		§	§		Y8	3	18	50	1.0k		100m	100m		%	Ref/Trf	None	None †
55	5415		§	§		48	3	18	50	1.0k		100m	100m		%	Ref/Trf	None	None †
56	5415-2		§	§		06	3	30	50	200		50m	10		%	DS/Ref/Trf	None	None †
57	5502(2)		§	§		06	3	30	50	200		50m	10		%	DS/Ref/Trf	None	None †
58	FE0405		*	S		05	3.0	5.5	30	35	20†	15m	60m	50k	11 %	FE;2x32	None	PY718
59	SX475-5	.14	21§	5	28u	16		15.								Dual-display	None	PY889 Δ
60	SX475G	.14	21§	5	28u	15		15.								Dual-display	None	PY889 Δ
61	SX475M	.14	21§	5	28u	29		15.								Dual-display	None	PY889 Δ
62	SX475X	.14	21§	5	24u	25		15.								Dual-display	None	PY889 Δ
63	LC513000-300.28/0E	.15		FVM	12u†	28	3.0	6.0	30	100	20	40m	40m	100k	11	FE,Ref	None ♦	PY831
64	LC513000-300.15/0S	.15	2§	FVM	18u†	16	3.0	6.0	30	200	20	40m	80m	100k	11	FE,Ref	None ♦	PY831
65	FE0405AAB	.16	32	FEM		28		10 Δ	30	100	20	150m	600m	50k	6	Trn;2x32 b-gr	None ♦	PY718
66	FE0405AAQ	.16	32	FEM		28		10 Δ	30	100	20	150m	600m	50k		Trn;2x32 b-gr	None ♦	PY718
67	FE0405ACR	.16	32	FEM		28		10 Δ	30	100	20	150m	600m	50k	2	Ref;2x32 b-gr	None ♦	PY718
68	FE0405ATI	.16	32	FEM		28		10 Δ	30	100	20	150m	600m	50k		Ref;2x32 b-gr	None ♦	PY718
69	FE0405ATIB	.16	32	FEM		28		10 Δ	30	100	20	150m	600m	50k	6	Ref;2x32 b-gr	None ♦	PY718
70	FE0405TJG	.16	32	FEM		25		10 Δ	30	100	20	150m	600m	50k	5	Trf;2x32 b-gr	None ♦	PY718
71	FE0405TJQ	.16	32	FEM		25		10 Δ	30	100	20	150m	600m	50k		Trf;2x32 b-gr	None ♦	PY718
72	LF5001QE	200m		F		04	3.0		32			150	150			36x2; Ref	None	None ☑
73	LF5001QF	200m		F		04	3.0		32			150	150			36x2; Trn	None	None ☑
74	LC11402600-310.28/0E	.20		FM		28	3.9	4.5	30	100	20	40m	60m	100k	11	FE,Ref,Mux1:2	None ♦	PY1106
75	LC703000-300.28/1E	.20		FVM	26u†	28	3.0	6.0	30	200	20	40m	40m	100k	11	FE,Ref	None ♦	PY828
76	LC11402600-310.15/0S	.20	2§	FM		16	3.0	3.2	30	100	20	80m	120m	100k	11	FE,Ref,Mux1:2	None ♦	PY1106
77	LC703000-300.15/1S	.20	2§	FVM	39u†	16	3.0	6.0	30	200	20	40m	80m	100k	11	FE,Ref	None ♦	PY828
78	SX474-5	.2	32§	5	28u	16		15.								Bars .20x.07	None	None
79	SX474G	.2	32§	5	28u	15		15.								Bars .20x.07	None	None
80	SX474M	.2	32§	5	28u	29		15.								Bars .20x.07	None	None
81	SX474X	.2	32§	5	24u	25		15.								Bars .20x.07	None	None
82	LC554731-311.15/0S	.22	4*	FC		16	2.8	3.2	30	100	20	80m	120m	100k	11	FE,Ref,Mux1:2	None ♦	PY1105
83	91D5R11H	300m	20§	5		15	3.0	12	30	60		80m	120m*			Ref	None ♦	PY1094
84	91E3R11GH	300m	20§	5		48	4.0	15	30	60		20m	40m*			Ref	None ♦	PY1094
85	91E5R11H	300m	20§	5		15	3.0	12	30	60		80m	120m*			Ref	None ♦	PY1094
86	91E9R11GH	300m	20§	5		29	4.0	15	30	60		32m	55m*			Ref	None ♦	PY1094
87	91R3R11GH	300m	20§	5		48	4.0	15	30	60		20m	45m*			Ref	None ♦	PY1094
88	91R9R11GH	300m	20§	5		29	4.0	15	30	60		32m	55m*			Ref	None ♦	PY1094
89	SX476-5	.3	20§	5	28u	16		15.								Bars .30X.15	None	PY890 Δ
90	SX476G	.3	20§	5	28u	15		15.								Bars .30X.15	None	PY890 Δ
91	SX476M	.3	20§	5	28u	29		15.								Bars .30X.15	None	PY890 Δ
92	SX476X	.3	20§	5	24u	25		15.								Bars .30X.15	None	PY890 Δ
93	SX473-5	.3	99§	5	28u	16		15.								Bars .30x.03	None	PY887 Δ
94	SX473G	.3	99§	5	28u	15		15.								Bars .30x.03	None	PY887 Δ
95	SX473M	.3	99§	5	28u	29		15.								Bars .30x.03	None	PY887 Δ
96	SX473X	.3	99§	5	24u	25		15.								Bars .30x.03	None	PY887 Δ
97	LM40101	378m		F		05	-5	5.0								40x1	None	None ☑
98	416D5R99H	400m	64§		§	15	3.0	12	30	60		80m	120m*			Ref	None ♦	PY1357
99	416E3R99GH	400m	64§		§	48	4.0	15	30	60		20m	45m*			Ref	None ♦	PY1357
100	416E5R99H	400m	64§		§	15	3.0	12	30	60		80m	120m*			Ref	None ♦	PY1357
101	416E9R99GH	400m	64§	5		29	4.0	15	30	60		32m	55m*			Ref	None ♦	PY1357
102	416R3R99GH	400m	64§	5		48	4.0	15	30	60		20m	45m*			Ref	None ♦	PY1357

SYMBOLS AND CODES EXPLAINED IN INTERPRETER

36. LCD DISPLAYS - Bar Graph (Cont'd)

IN ORDER OF FONT AND: (1) CHAR. HEIGHT (2) No CHAR. (3) PWR CONSUMP & (4)TYPE No.

LINE No.	4 TYPE NUMBER	1 CHAR. HGHT. (in)	2 NO. CHAR	NOMEN	3 MAX. PWR. CONS. Δ-/seg (W)	TEMP RNG. CODE - +	OPERATING VOLTAGE MIN. VOLT (V)	MAX. VOLT (V)	FREQ. MIN. (Hz)	FREQ. MAX. (Hz)	CONTRAST RATIO	RISE TIME tr (s)	DECAY TIME tf (s)	LIFE (hrs)	COL -OR	FEATURES	SCHE-MATIC	DRAWING
1	416R9R99GH	400m	64§	5		29	4.0	15	30	60		32m	55m*			Ref	None ♦	PY1357
2	LM24102	430m		F		05	-5	5.0								24X1	None	None ⊠
3	PCIM500(A)	.45	32	M				5.0 †								Analog	None	PY1332
4	FTD2072	512m		FC		05		2.9 †	30	360		80m	80m	50k	11 %		None	PY1303
LCD DISPLAY SHUTTER																		
8	127B01AA					15	3 Δ	12 Δ		32 †					11	Ref	None ♦	PY1542b
9	127B01AB					15	3 Δ	12 Δ		32 †					11	Trf	None ♦	PY1542b
10	127B01AC					15	3 Δ	12 Δ		32 †					11	Trf	None ♦	PY1542b
11	127B01AD					15	3 Δ	12 Δ		32 †					*	Trf	None ♦	PY1542b
12	127B03BF					38	4 Δ	12 Δ		32 †					11	Ref	None ♦	PY1542b
13	127B03BG					38	4 Δ	12 Δ		32 †					11	Trf	None ♦	PY1542b
14	127B03BH					38	4 Δ	12 Δ		32 †					11	Trf	None ♦	PY1542b
15	127B03BK					38	4 Δ	12 Δ		32 †					*	Trf	None ♦	PY1542b
16	127F01AA					15	3 Δ	12 Δ		32 †					11	Ref	None ♦	PY1542
17	127F01AB					15	3 Δ	12 Δ		32 †					11	Trf	None ♦	PY1542
18	127F01AC					15	3 Δ	12 Δ		32 †					11	Trf	None ♦	PY1542
19	127F01AD					15	3 Δ	12 Δ		32 †					*	Trf	None ♦	PY1542
20	127F03BF					38	4 Δ	12 Δ		32 †					11	Ref	None ♦	PY1542
21	127F03BG					38	4 Δ	12 Δ		32 †					11	Trf	None ♦	PY1542
22	127F03BH					38	4 Δ	12 Δ		32 †					11	Trf	None ♦	PY1542
23	127F03BK					38	4 Δ	12 Δ		32 †					*	Trf	None ♦	PY1542
24	128B01AA					15	3 Δ	12 Δ		32 †					11	Ref	None ♦	PY1543
25	128B01AB					15	3 Δ	12 Δ		32 †					11	Trf	None ♦	PY1543
26	128B01AC					15	3 Δ	12 Δ		32 †					11	Trf	None ♦	PY1543
27	128B01AD					15	3 Δ	12 Δ		32 †					*	Trf	None ♦	PY1543
28	128B03BF					38	4 Δ	12 Δ		32 †					11	Ref	None ♦	PY1543
29	128B03BG					38	4 Δ	12 Δ		32 †					11	Trf	None ♦	PY1543
30	128B03BH					38	4 Δ	12 Δ		32 †					11	Trf	None ♦	PY1543
31	128B03BK					38	4 Δ	12 Δ		32 †					*	Trf	None ♦	PY1543
32	128F01AA					15	3 Δ	12 Δ		32 †					11	Ref	None ♦	PY1543
33	128F01AB					15	3 Δ	12 Δ		32 †					11	Trf	None ♦	PY1543
34	128F01AC					15	3 Δ	12 Δ		32 †					11	Trf	None ♦	PY1543
35	128F01AD					15	3 Δ	12 Δ		32 †					*	Trf	None ♦	PY1543
36	128F03BF					38	4 Δ	12 Δ		32 †					11	Ref	None ♦	PY1543
37	128F03BG					38	4 Δ	12 Δ		32 †					11	Trf	None ♦	PY1543
38	128F03BH					38	4 Δ	12 Δ		32 †					11	Trf	None ♦	PY1543
39	128F03BK					38	4 Δ	12 Δ		32 †					*	Trf	None ♦	PY1543
40	3510(2)	700m	1		10u†	08	1.5	20	30	100	10	200m	200m	30k	10 $	Light Valve	None	None ⊠
41	4X11	1.0	4		40u†	08	1.5	20	30	100	10	200m	200m	30k	10 $	Light Valve	None	None ⊠

For more than 1,200 display driver circuits, see D.A.T.A.'s 22nd INTERFACE ICs.

SYMBOLS AND CODES EXPLAINED IN INTERPRETER

IN ORDER OF: (1) TYPE (2) CHAR. HEIGHT (3) No. CHAR. & (4) TYPE NUMBER

LINE No.	4 TYPE NUMBER	1 TYPE OF DIS-PLAY	3 NO. OF CHR	2 CHAR. HGHT. (in)	COLOR	D.C. VOLT (V)	D.C. CURR per seg (A)	PD per seg	TEMP RNG. CODE - +	RESP TIME (s)	LUMINANCE Lv (fL)	LUMINANCE V SUPP (V)	LIFE (hr)	FEATURES	SCHE-MATIC	DRAWING
DISPLAY, ELECTROLUMINESCENT																
4	CQW32	ELL	32	18 *			30m	2.5 #	28%		0.3mΔ			Alph: Pk Wave Lgth 650 nm	None	None
DISPLAY, GAS DISCHARGE																
8	SM810-001	GAS	40	235m		5.0	1.8 #	8.8 #	05		100 Ø			Dot Matrix Display Sys	EC268c	PY709
9	AS03250	GAS	3	.25	2	180	.42m				80 Ø		25k	Cross Hair,Descriptors	None	None
10	SP324	GAS	4	250m	3	180	155u	145m	0A		200	180	25k	Cathode Multiplex Op;7 Seg	None	PY806a
11	SP325	GAS	5	250m	3	180	155u	145m	0A		200	180	25k	Cathode Multiplex Op;7 Seg	None	PY806a
12	HTI20BG1	GAS	6	.25	2	180	.15m				80 Ø		25k	Guide Slope Indicator	None	None
13	NL4997	GAS	1	300m	3	170	2.0m		68				200k	Readout Tube	None	PY270
14	NL4998	GAS	1	300m	3	170	2.0m		68				200k	Readout Tube	None	PY270
15	HB233	GAS	3	300m	3	170	520u	325m	07	20u	500	170	50k	14 Seg,Planar,Alph	None	None
16	NL7009	GAS	1	310m	3	170	1.2m#		47					Readout Tube;Num	None	PY272 Ø
17	NL7977/4032	GAS	1	310m	3	170	1.4m#		47					Readout Tube;Num	None	PY271 Ø
18	NL8502	GAS	1	310m	3	120	1.1m#	30m#						Readout Tube	None	None
19	NL8502/4021	GAS	1	310m	3	170	1.4m#		47					Readout Tube;Num	None	PY272 Ø
20	SP334	GAS		330m	3	180	180u	24m	07	20u	210	180	100k	7-Segm,Planar;Num	EC91a	PY10c ☑
21	SP331	GAS	1	330m	3	180	180u	24m	07	20u	210	180	100k	7-Segm,Planar;Num	EC91a	PY10 ☑
22	HB332	GAS	2	330m	3	170	520u	485m	07		225	170	100k	7-Segment;Planar,Multiplex	EC102a	PY10a ☑
23	SP332	GAS	2	330m	3	180	180u	24m	07	20u	210	180	100k	7-Segm,Planar;Num	EC91a	PY10a ☑
24	HB333	GAS	3	330m	3	170	520u	485m	07		225	170	100k	7-Segment;Planar,Multiplex	EC102a	PY10b ☑
25	SP333	GAS	3	330m	3	180	180u	24m	07	20u	210	180	100k	7-Segm,Planar;Num	EC91a	PY10b ☑
26	TSO5400	GAS	5	.40	2	180	.50m				80 Ø		25k	W/Fraction	None	None
27	AR09450	GAS	9	400m	2	180	600u		05		50 Ø	70	10k	Numeric;7 Segment;Commas	None	PY162cΔ
28	AS10400	GAS	10	.40	2	180	.35m				80 Ø		25k	Special Descriptors	None	None
29	AR11450	GAS	11	400m	2	180	600u		05		50 Ø	70	10k	Numeric;7 Segment;Commas	None	PY162dΔ
30	SM810-002	GAS	20	480m		5.0	1.7		05					Self Test and Scroll Modes	None ♦	PY805
31	AR04502	GAS	4	500m	3	180	350u	6.0m	47%	20u	80	70	18k	7-Seg Timer W/Colon	EC174b	PY355 ☑
32	SP452	GAS	16	500m	3	180	830u	130m	05	20u	105	200	50k	14 Segment, Planar	EC5316ZZ	PY462 Δ
33	NL5560	GAS	1	520m	3	170	2.0m#		47					Readout Tube;Num	None	PY275 Ø
34	SM851	GAS	1	550m	3	180	330u	45m	05	20u	210	180	100k	7-Segm,Planar;Num w/Logic	EC141ZZ	PY9 ☑
35	SP351	GAS	1	550m	3	180	330u	45m	07	20u	210	180	100k	7-Segm,Planar;Num	EC91a	PY11 ☑
36	HB352	GAS	2	550m	3	170	900u	800m	07		225	170	100k	7-Segment;Planar,Multiplex	EC102a	PY11a ☑
37	SM852	GAS	2	550m	3	180	330u	45m	05	20u	210	180	100k	7-Segm,Planar;Num w/Logic	EC141ZY	PY9a ☑
38	SM854	GAS	2	550m	3	180	330u	45m	05	20u	210	180	100k	7-Segm,Planar;Num w/Logic	EC141ZW	PY9c ☑
39	SM856	GAS	2	550m	3	180	330u	45m	05	20u	210	180	100k	7-Segm,Planar;Num w/Logic	EC142ZY	PY9a ☑
40	SP252	GAS	2	550m	3	180	330	575m#	07	20u	210	180	100k	14 Seg;Planar;Alpha Num	EC172a	PY191
41	SP352	GAS	2	550m	3	180	330u	45m	07	20u	210	180	100k	7-Segm,Planar;Num	EC91a	PY11a ☑
42	SP354	GAS	2	550m	3	180	330u	45m	07	20u	210	180	100k	7-Segm,Planar;Num	EC91a	PY11c ☑
43	HB353	GAS	3	550m	3	170	900u	800m	07		225	170	100k	7-Segment;Planar,Multiplex	EC102a	PY11b ☑
44	SM853	GAS	3	550m	3	180	330u	45m	05	20u	210	180	100k	7-Segm,Planar;Num w/Logic	EC141ZX	PY9b ☑
45	SM857	GAS	3	550m	3	180	330u	45m	05	20u	210	180	100k	7-Segm,Planar;Num w/Logic	EC142ZX	PY9b ☑
46	SP353	GAS	3	550m	3	180	330u	45m	07	20u	210	180	100k	7-Segm,Planar;Num	EC91a	PY11b ☑
47	SP355	GAS	3	550m	3	180	330u	45m	07	20u	210	180	100k	7-Segment,Planar,Numeric	EC91a	PY192a☑
48	SP357	GAS	3	550m	3	180	330u	45m	07	20u	210	180	100k	7-Seg,Planar,Num,Clock	EC141c	PY192b☑
49	HB356	GAS	4	550m	3	170	900u	800m	07		225	170	100k	7-Segment;Planar,Multiplex	EC102a	PY11d ☑
50	SP356	GAS	4	550m	3	180	330u	45m	07	20u	210	180	100k	7-Segment,Planar,Numeric	EC91a	PY11d ☑
51	SP358	GAS	4	550m	3	180	330u	45m	07	20u	210	180	100k	7-Seg,Planar,Num,Clock	EC141c	PY192c☑
52	NL840	GAS	1	600m	3	170	2.5m#	430m#						Readout Tube	None	None
53	NL809	GAS	1	610m	3	170	3.0m#		47					Readout Tube;Lt Hand Dec	None	PY270bØ
54	NL841	GAS	1	610m	3	170	3.0m#		47					Readout Tube;Lt Hand Dec	None	PY278 Ø
55	NL842	GAS	1	610m	3	170	3.0m#		47					Readout Tube;Rt Hand Dec	None	PY278 Ø
56	NL843	GAS	1	610m	3	170	3.0m#		47					Readout Tube;Plus or Minus	None	PY278 Ø
57	NL844	GAS	1	610m	3	170	4.0m#		68				200k	Readout Tube	EC141d	PY276 Ø
58	NL845	GAS	1	610m	3	170	4.0m#		68				200k	Readout Tube;Lt Hand Dec	EC141e	PY276 Ø
59	NL846	GAS	1	610m	3	170	4.0m#		68				200k	Readout Tube;Rt Hand Dec	EC141e	PY276 Ø
60	NL847	GAS	1	610m	3	170	4.0m#		68				200k	Readout Tube;Plus or Minus	EC141f	PY276 Ø
61	NL848	GAS	1	610m	3	170	3.0m#		47					Readout Tube;2 Decimals	None	PY278 Ø
62	NL874	GAS	1	610m	3	170	3.0m#		68				200k	Readout Tube	EC141d	PY689 Ø
63	NL875	GAS	1	610m	3	170	3.0m#		68				200k	Readout Tube;Lt Hand Dec	EC141e	PY689 Ø
64	NL876	GAS	1	610m	3	170	3.0m#		68				200k	Readout Tube;Rt Hand Dec	EC141e	PY689 Ø
65	NL877	GAS	1	610m	3	170	3.0m#		68				200k	Readout Tube;Rt,Lt Hand Dec	None	PY689 Ø
66	NL884	GAS	1	610m	3	170	3.0m#		68				200k	Readout Tube;Plus or Minus	EC141f	PY689 Ø
67	NL900	GAS	1	610m	3	170	3.0m#		47					Readout Tube;Num	None	PY279 Ø
68	NL901	GAS	1	610m	3	170	3.0m#		47					Readout Tube;Lt Hand Dec	None	PY279 Ø
69	NL902	GAS	1	610m	3	170	3.0m#		47					Readout Tube;Rt Hand Dec	None	PY279 Ø
70	NL903	GAS	1	610m	3	170	3.0m#		47					Readout Tube;Plus or Minus	None	PY279 Ø
71	NL904	GAS	1	610m	3	170	3.0m#		47					Readout Tube;Num	None	PY280 Ø
72	NL905	GAS	1	610m	3	170	3.0m#		47					Readout Tube;Lt Hand Dec	None	PY280 Ø
73	NL5016	GAS	1	610m	3	170	4.0m		68					Readout Tube;Plus or Minus	EC141h	PY273 Ø
74	NL5025	GAS	1	610m	3	70	4.0m						10k	Readout Tube	None ♦	None
75	NL5440	GAS	1	610m	3	170	3.0m#		47					Readout Tube;Num	None	PY276 Ø
76	NL5440A	GAS	1	610m	3	170	3.0m#		47					Readout Tube;Num	None	PY277 Ø
77	NL5441	GAS	1	610m	3	170	3.0m#		47					Readout Tube;2 Decimals	None	PY276 Ø
78	NL5441A	GAS	1	610m	3	170	3.0m#		47					Readout Tube;2 Decimals	None	PY277 Ø
79	NL5442	GAS	1	610m	3	170	3.0m#		47					Readout Tube;Plus or Minus	None	PY276 Ø
80	NL5442A	GAS	1	610m	3	170	3.0m#		47					Readout Tube;Plus or Minus	None	PY277 Ø
81	NL5560/918	GAS	1	610m	3	170	2.0m		47					Readout Tube	EC141i	None
82	NL5961	GAS	1	610m	3	250	4.0m						3.0k	Readout Tube	EC141g	PY270c☑
83	NL5992	GAS	1	610m	3	170	3.0m#		47					Readout Tube;Plus or Minus	None	PY270aØ
84	NL6844A	GAS	1	610m	3	170	3.0m		68					Readout Tube	EC141h	PY273 Ø
85	NL8037/5031	GAS	1	610m	3	170	3.0m#		68					Readout Tube	EC141h	PY273 Ø
86	NL8421/5092	GAS	1	610m	3	170	3.0m#		47					Readout Tube;Num	None	PY273 Ø
87	NL8422/5991	GAS	1	610m	3	170	3.0m#		47					Readout Tube;Num	None	PY270aØ
88	NL8754/840	GAS	1	610m	3	170	3.0m#		47					Readout Tube;Num	None	PY278 Ø
89	NL50911	GAS	1	610m	3	170	3.0m#		47					Readout Tube;Plus or Minus	None	PY273 Ø
90	NL5971	GAS	1	625m	3	170	4.0m		68				50k	Display Tube	None ♦	None
91	SP491	GAS	6	700m	3	200	3.2m	510m	05	20u	125	200	50k	7-Segment;Planar;Numeric	EC66	PY612 ☑
92	SP492	GAS	6	700m	3	200	3.4m	500m	05	20u	125	200	50k	7 Seg.,Planar,Num	EC66	PY612
93	ARO7700	Gas	7	.7	3	180	4.5m		90☑		50 Ø		255k	Pinball Display	EC397a	PY904
94	NL807	GAS	1	808m	3	170	4.5m#		47					Readout Tube;Num	None	PY281aØ
95	NL821	GAS	1	808m	3	170	4.5m#		47					Readout Tube;Lt Hand Dec	None	PY281aØ
96	NL6034	GAS	1	808m	3	170	4.0m#		47					Readout Tube;Plus or Minus	None	PY273aØ
97	NL8423/6091	GAS	1	808m	3	170	4.0m#		47					Readout Tube;Num	None	PY273aØ
98	SP101(2)	GAS	1	1.0	3	180	700u	95m	07	20u	225	180	100k	7-Segm,Planar	EC211a	PY190 ☑
99	SP102(2)	GAS	1	1.0	3	180	700u	95m	07	20u	225	180	100k	7-Segment,Planar	EC231a	PY461 ☑
100	NL8091	GAS	1	1.3	3	170	6.0m#		47					Readout Tube;Num	None	PY274 Ø
101	NL934	GAS	1	2.0	3	170	10m#		47					Readout Tube;Lt Hand Dec	None	PY282 Ø
102	NL7037	GAS	1	2.0	3	170	10m#		47					Readout Tube;Num	None	PY282 Ø
103	NL7094	GAS	1	2.0	3	170	7.0m#		47					Readout Tube;Num	None	PY274aØ
104	SP431	GAS	4	2.0	3	200	5.0m	735m	05	20u	180	200	50k	7-Segment,+/-Sign,Colon	EC884ZZ	PY610 ☑
DISPLAY, INCANDESCENT																
108	15-15	INC			10	1.5	15m	22m		5.0m	60m$	1.5	800	Micro-miniature Lamp	None	PY128aØ
109	30-30	INC			10	3.0	30m	90m		7.0m	250m$	3.0	1.0k	Micro-miniature Lamp	None	PY128bØ
110	60-20	INC			10	6.0	20m	120m		10m	400m$	6.0	2.0k	Micro-miniature Lamp	None	PY128cØ

SYMBOLS AND CODES EXPLAINED IN INTERPRETER

37. OTHER TECHNOLOGY DISPLAYS- Incandescent (Cont'd)

IN ORDER OF: (1) TYPE (2) CHAR. HEIGHT (3) No. CHAR. & (4) TYPE NUMBER

LINE No.	4 TYPE NUMBER	1 TYPE OF DIS-PLAY	3 NO. OF CHR	2 CHAR. HGHT. (in)	COLOR	D.C. VOLT (V)	CURR per seg (A)	PD per seg	TEMP RNG. CODE - +	RESP TIME (s)	LUMINANCE Lv (fL)	V SUPP (V)	LIFE (hr)	FEATURES	SCHE-MATIC	DRAWING
1	L12-12	INC			10	1.2	12m	14m		5.0m	45m$	1.2	1.0k	Micro-miniature Lamp	None	PY128 Ø
2	L15-30	INC			10	1.5	30m	45m		7.0m	160m$	1.5	1.0k	Micro-miniature Lamp	None	PY128 Ø
3	L15-45	INC			10	1.5	45m	67m		10m	220m$	1.5	1.0k	Micro-miniature Lamp	None	PY128 Ø
4	L30011	INC			10	5.0	115m		05					Lamp;Use w/P30011 Dectector	FB184	PS385
5	L30041	INC			10	5.0	115m		05					Lamp;Use w/P30041 Dectector	FB184	PS386
6	MD430DP	INC			10	3.0	9.0m			14m	1.4k	3.0		Decimal Point	None	PY130c
7	MD440DP	INC			10	4.0	10m			10m	9.0k	4.0		Decimal Point	None	PY130c
8	MD450DP	INC			10	5.0	12m			10m	9.0k	5.0		Decimal Point	None	PY130c
9	MD630DP	INC			10	3.0	9.0m			14m	1.4k	3.0		Decimal Point	None	PY134 ☑
10	MD640DP	INC			10	4.0	14m			60m	9.0k	4.0		Decimal Point	None	PY134 ☑
11	MD430PM	INC		156m	10	3.0	8.0m			18m	1.4k	3.0		Plus/Minus	None	PY652
12	MD440PM	INC		156m	10	4.0	12m			21m	9.0k	4.0		Plus/Minus	None	PY652
13	MD450PM	INC		156m	10	5.0	12m			17m	9.0k	5.0		Plus/Minus	None	PY652
14	MD630PM	INC		156m	10	3.0	8.0m			18m	1.4k	3.0		Plus/Minus	None	PY134 ☑
15	MD640PM	INC		156m	10	4.0	17m			16m	9.0k	4.0		Plus/Minus	None	PY134 ☑
16	MD650PM	INC		156m	10	5.0	18m			24m	9.0k	5.0		Plus/Minus	None	PY134
17	DIP630PM	INC	1	156m	10	3.0	8.0m	24m		18m	1.4k	3.0	100k	Plus/Minus	None ♦	PY132 ☑
18	DIP640PM	INC	1	156m	10	4.0	17m	68m		16m	9.0k	4.0	100k	Plus/Minus	None ♦	PY132 ☑
19	DIP650PM	INC	1	156m	10	5.0	18m	90m		24m	9.0k	5.0	100k	Plus/Minus	None ♦	PY132 ☑
20	MD4N50	INC		225m	10	5.0	18m				9.0k	5.0	100k	1 1/2 Digit	None	PY652
21	MD4H50	INC	1	225m	10	5.0	18m				9.0k	5.0	100k	Hexadecimal	None	PY652
22	MDD450	INC	1	225m	10	5.0	12m				9.0k	5.0	100k	Digit	None	None ☑
23	O44	INC	1	225m	10	4.0	12m				9.0k	4.0	100k	16 Segment	None	None ☑
24	O45	INC	1	225m	10	5.0	12m				9.0k	5.0	100k	16 Segment	None	None ☑
25	DIP850PM	INC	1	250m	10	5.0	18m	90m		24m	7.0k	5.0	100k	Plus/Minus	None ♦	PY132a☑
26	MD430(1)	INC	1	250m	10	3.0	8.0m			18m	1.4k	3.0		Digit	None	PY652
27	MD440(1)	INC	1	250m	10	4.0	12m			21m	9.0k	4.0		Digit	None	PY652
28	MD450(1)	INC	1	250m	10	5.0	12m			17m	9.0k	5.0		Digit	None	PY652
29	MDD43	INC	1	.25	10	3.0 #	8m	24m		18m	1.4k		100k	16-Segment Alphanumeric	None ♦	PY775
30	MDD44	INC	1	.25	10	4.0 #	12m	48m		21m	9.0k		100k	16 Segment Alphenumeric	None ♦	PY775
31	MDD45	INC	1	.25	10	5.0 #	12m	60m		17m	9.0k		100k	16 Segment Alphenumeric	None ♦	PY775
32	O43	INC	1	250m	10	3.0	8.0m	24m		18m	1.4k	3.0	100k	Alph	None ♦	PY129 ☑
33	DR630	INC	1	.30		3.0	8.0m			18m	3.0k			Digit	EC81a	PY127
34	DR630EW	INC	1	.30		3.0	8.0m			18m	3.0k			ALPHA	None	PY127
35	DR630NS	INC	1	.30		3.0	8.0m			18m	3.0k			ALPHA	EC81c	PY127
36	DR640	INC	1	.30		4.0	17m			16m	15k			Digit	EC81a	PY127
37	DR640EW	INC	1	.30		4.0	17m			16m				ALPHA	None	PY127
38	DR640NS	INC	1	.30		4.0	17m			16m	15k			ALPHA	None	PY127
39	DR650	INC	1	300m	10	5.0	18m				9.0k	5.0	100k	Digit	None	None
40	DR650EW	INC	1	300m	10	5.0	18m				9.0k	5.0	100k	East/West	None	None
41	DR650NS	INC	1	300m	10	5.0	18m				9.0k	5.0	100k	North/South	None	None
42	MDD63	INC	1	300m	10	3.0	8.0m				1.4k	3.0	100k	16 Segment	None	PY776
43	MDD64	INC	1	300m	10	4.0	17m				9.0k	4.0	100k	16 Segment	None	PY776
44	MDD65	INC	1	300m	10	5.0	18m				9.0k	5.0	100k	16 Segment	None	PY776
45	MDD640	INC	1	300m	10	4.0	17m				9.0k	4.0	100k	Digit	None	None ☑
46	MDD650	INC	1	300m	10	5.0	18m				9.0k	5.0	100k	Digit	None	None ☑
47	O63	INC	1	300m	10	3.0	8.0m	24m	5A		1.4k	3.0	100k	ALPH;16 Segm	None ♦	PY129a☑
48	O64	INC	1	300m	10	4.0	17m	68m	5A		9.0k	4.0	100k	Alph;16 Segm	None ♦	PY129a☑
49	5136	INC	1	310m	10	4.0	15m	60m	58		4.0k		100k	7-Seg. Num	None ♦	PY493 ☑
50	MD640EW	INC		312m	10	4.0	17m			16m	9.0k	4.0		East/West	None	PY134 ☑
51	MD640LR	INC		312m	10	4.0	17m			16m	9.0k	4.0		Left/Right	None	PY134
52	MD640NS	INC		312m	10	4.0	17m			16m	9.0k	4.0		North/South	None	PY134
53	MD640XY	INC		312m	10	4.0	17m			16m	9.0k	4.0		X,Y;Up,Dn;Lt,Rt	None	PY134
54	MD650DP	INC		312m	10	5.0	17m			45m	9.0k	5.0		Decimal Point	None	PY134
55	MD650EW	INC		312m	10	5.0	18m			24m	9.0k	5.0		East/West	None	PY134
56	MD650LR	INC		312m	10	5.0	18m			24m	9.0k	5.0		Left/Right	None	PY134
57	MD650NS	INC		312m	10	5.0	18m			24m	9.0k	5.0		North/South	None	PY134
58	MD650XY	INC		312m	10	5.0	18m			24m	9.0k	5.0		X,Y;Up,Dn;Lt,Rt	None	PY134
59	DIP630	INC	1	312m	10	3.0	8.0m	24m		18m	1.4k	3.0	100k	Digit	None ♦	PY132 ☑
60	DIP631L	INC	1	312m	10	3.0	8.0m	24m		18m	1.4k	3.0	100k	Digit w/L.H. Dec Pt	None ♦	PY132 ☑
61	DIP631R	INC	1	312m	10	3.0	8.0m	24m		18m	1.4k	3.0	100k	Digit w/R.H. Dec.Pt	None ♦	PY132 ☑
62	DIP632	INC	1	312m	10	3.0	8.0m	24m		18m	1.4k	3.0	100k	Digit w/Colon	None ♦	PY132 ☑
63	DIP640	INC	1	312m	10	4.0	17m	68m		16m	9.0k	4.0	100k	Digit	None ♦	PY132 ☑
64	DIP641L	INC	1	312m	10	4.0	17m	68m		16m	9.0k	4.0	100k	Digit w/L.H. Dec.Pt	None ♦	PY132 ☑
65	DIP641R	INC	1	312m	10	4.0	17m	68m		16m	9.0k	4.0	100k	Digit w/R.H. Dec Pt	None ♦	PY132 ☑
66	DIP642	INC	1	312m	10	4.0	17m	68m		16m	9.0k	4.0	100k	Digit w/Colon	None ♦	PY132 ☑
67	DIP650	INC	1	312m	10	5.0	18m	90m		24m	9.0k	5.0	100k	Digit	None ♦	PY132 ☑
68	DIP651L	INC	1	312m	10	5.0	18m	90m		24m	9.0k	5.0	100k	Digit w/L.H. Dec.Pt	None ♦	PY132 ☑
69	DIP651R	INC	1	312m	10	5.0	18m	90m		24m	9.0k	5.0	100k	Digit w/R.H. Dec.Pt	None ♦	PY132 ☑
70	DIP652	INC	1	312m	10	5.0	18m	90m		24m	9.0k	5.0	100k	Digit w/Colon	None ♦	PY132 ☑
71	MD630(2)	INC	1	312m	10	3.0	8.0m	24m		18m	1.4k	3.0	100k	Digit	None ♦	PY134 ☑
72	MD640	INC	1	312m	10	4.0	17m	68m		16m	9.0k	4.0	100k	Digit	None ♦	PY134 ☑
73	MD650	INC	1	312m	10	5.0	18m	90m		24m	9.0k	5.0	100k	Digit	None ♦	PY134 ☑
74	O65	INC	1	312m	10	5.0	18m	90m		24m	9.0k	5.0	100k	Alph	None ♦	PY129a☑
75	3015FBM10	INC	1	360m	10	5.0	10m	50m	58		1.7k	5.0	100k	7-Seg,Num	None ♦	PY135 ☑
76	3015FBM15	INC	1	360m	10	5.0	15m	75m	58		4.5k	5.0	100k	7-Seg,Num	None ♦	PY135 ☑
77	3015FBM20	INC	1	360m	10	5.0	20m	100m	58		5.5k	5.0	100k	7-Seg;Num	None ♦	PY135 ☑
78	3015FBM	INC	1	360m	10	5.0	8.0m	40m	58		700	5.0	250k	7-Seg,Num	None ♦	PY135 ☑
79	3015FBN10	INC	1	360m	10	5.0	10m	50m	58		1.7k	5.0	100k	7-Seg,Num	None ♦	PY135a☑
80	3015FBN15	INC	1	360m	10	5.0	15m	75m	58		4.5k	5.0	100k	7-Seg;Num	None	None
81	3015FBN20	INC	1	360m	10	5.0	20m	100m	58		5.5k	5.0	100k	7-Seg;Num	None ♦	PY135a☑
82	3015FBN	INC	1	360m	10	5.0	8.0m	40m	58		700	5.0	250k	7-Seg,Num	None ♦	PY135a☑
83	3015G10	INC	1	360m	10	5.0	10m	50m			1.7k	5.0	100k	Plus,Minus,One,Decimal	None ♦	PY136 ☑
84	3015G	INC	1	360m	10	5.0	8.0m	40m	58		700		250k	Plus,Minus,One Decimal	None ♦	PY136 ☑
85	DIP850	INC	1	453m	10	5.0	17m	85m		24m	7.0k	5.0	100k	Digit	None ♦	PY132a☑
86	DIP851L	INC	1	453m	10	5.0	17m	85m		24m	7.0k	5.0	100k	Digit w/L.H. Dec.Pt	None ♦	PY132a☑
87	DIP851R	INC	1	453m	10	5.0	17m	85m		24m	7.0k	5.0	100k	Digit w/R.H. Dec.Pt	None ♦	PY132a☑
88	DIP852	INC	1	453m	10	5.0	17m	85m		24m	7.0k	5.0	100k	Digit w/Colon	None ♦	PY132a☑
89	GL751RS	INC	1	.47	%	5.0	17m		58	24m	15k			Digit R.D.P.	EC141a	PY120
90	GL951RS	INC	1	.61	%	5.0	17m		58	24m	15k			Digit R.D.P.	EC161a	PY121
91	DIP1050	INC	1	625m	10	5.0	17m	85m		28m	6.0k	5.0	100k	7-Seg Digital	None ♦	PY60p
92	DIP1050A	INC	1	625m	10	5.0	17m	85m		28m	6.0k	5.0	100k	16-Seg Alphanumeric	None ♦	PY133a☑
93	DIP1050PM1	INC	1	625m	10	5.0	17m	85m		28m	6.0k	5.0	100k	Plus/Minus 1	None ♦	PY60p
94	DIP1051L	INC	1	625m	10	5.0	17m	85m		28m	6.0k	5.0	100k	7-Seg Dig Lf Hand Dec Pt	None ♦	PY60p
95	DIP1051R	INC	1	625m	10	5.0	17m	85m		28m	6.0k	5.0	100k	7-Seg Dig Rt Hand Dec Pt	None ♦	PY60p
96	DIP1052	INC	1	625m	10	5.0	17m	85m		28m	6.0k	5.0	100k	7-Seg Digital Colon	None ♦	PY60p

DISPLAY, VACUUM FLUORESCENT

100	CP1009GLR	VFD				50			48		300		10k	Meter Scale	EC189ZZ	PY648
101	FG48SA1	VFD			5	15	625u	13m	05	8.0u	180	15		Bar Graph:24 Seg 2 Lines	EC1816ZY	PY642ai
102	FG100SA1	VFD			5	35	400u	3.5m	15	8.0u	250	35		Bar Graph:100 Seg	EC1816ZY	PY642aj
103	FG100SB1	VFD			5	35	350u	3.6m	15	8.0u	250	35		Bar Graph:100 Seg W/3 Digit	EC1816ZY	PY642ak
104	FG120S1	VFD			5	35	600u	4.7m	15	8.0u	200	35		Bar Graph:120 Seg	EC1816ZY	PY642al
105	FG202SA2	VFD			5	35	250u	1.6m	15	8.0u	250	35		Bar Graph:101 Seg 2 Lines	EC1816ZY	PY646j
106	M1400	VFD	40		%	5.0								5x12 dot matrix	EC2610ZZ	None
107	M2400	VFD	80		%	5.0								5x7 dot matrix	EC2610ZZ	None
108	FIP24DW17YS	VFD	24	.08	5				16		180	16		Dual 24 element bar graph	EC3324ZY	PY1177
109	FIP24EW17YS	VFD	24	.08	5				16		180	16		Dual 24 element bar graph	EC3324ZX	PY1177
110	FIP24FW17YS	VFD	24	.08	5				16		180	16		Dual 24 element bar graph	EC3324ZW	PY952

SYMBOLS AND CODES EXPLAINED IN INTERPRETER

37. OTHER TECHNOLOGY DISPLAYS - Vacuum Fluorescent (Cont'd)

IN ORDER OF: (1) TYPE (2) CHAR. HEIGHT (3) No. CHAR. & (4) TYPE NUMBER

LINE No.	4 TYPE NUMBER	1 TYPE OF DIS-PLAY	3 NO. OF CHR	2 CHAR. HGHT. (in)	COLOR	D.C. VOLT (V)	D.C. CURR per seg (A)	PD per seg	TEMP RNG. CODE - +	RESP TIME (s)	LUMINANCE Lv (fL)	LUMINANCE V SUPP (V)	LIFE (hr)	FEATURES	SCHE-MATIC	DRAWING
1	FIP80X2AA	VFD		140m		8.2 *	200m				150			Dot Matrix,160 digits	EC14260Z	PY1055
2	FIP160A4X	VFD		140m		8.2 *	200m				150			Dot Matrix,160 digits	EC14260Z	PY1055
3	FG94B1	VFD	9	.14	65	2.7	12m	5.4m			180			7-Seg Numeric	EC1810ZZ	None
4	FG134A2	VFD	13	.14	65	3.6	22m	9.5m			200			7-Seg Numeric w/D.P	EC1810ZZ	PY646b△
5	DC40125A	VFD	48	.14		60		127m	48		200		50k	5x7 Dot Matrix	None	PY642aq
6	FG124B2	VFD	12	146m	5	24	50u	600u	15	8.0u	180	24		7-Seg Num W/DP	EC1810ZY	PY646a
7	FG144B2	VFD	14	146m	5	24	50u	600u	15	8.0u	180	24		7-Seg Num W/DP	EC1810ZY	PY646d
8	FG94C1	VFD	9	.16	65	2.7	12m	6.4m			180			7-Seg Numeric	EC1810ZZ	None
9	FG94G	VFD	9	.16		29		7.2m	48		200		50k	7-Seg w/Special Symbols	None	PY641ao
10	LD8197A/FIP12A4	VFD	12	.16	5				16		80 Ø			Num;D.P.	EC2212a	PY486
11	LD81971/FIP12A4	VFD	12	.16	5				16		80 Ø			Num;D.P.	EC2212a	PY486
12	LD8225/FIP8A5	VFD	8	.17	5				16		80 Ø			Num;D.P.	EC188a	PY724
13	FG95J6	VFD	9	.17	65	3.4	6.3m	5.3m			200			7Seg Numeric for Calculator	EC1810ZZ	None
14	FG135B5	VFD	13	.17	65	3.7	12m	5.8m			200			7-Seg Numeric w/D.P	EC1810ZZ	None
15	FG135G	VFD	13	.17	65	3.7	18m	8.9m			200			7seg Numeric for Calculator	EC1810ZZ	PY644 △
16	FG136C6	VFD	13	.17		29		8.9m	48		200		50k	7-Seg w/Special Symbols	None	PY641ap
17	FG85A1	VFD	8	177m	5	24	.07m	900u	15	8.0u	160	24		7-Seg Num W/DP	EC1810ZY	PY642b
18	FG135F	VFD	13	177m	5	24	.10m	1.0m	15	8.0u	160	24		7-Seg Num W/DP	EC1810ZY	PY644
19	FG165A	VFD	16	177m	5	24	.12m	1.1m	15	8.0u	200	24		7-SegNum W/D.P.	EC1810ZY	PY761
20	FIP8A5	VFD	8	.18		2.8 *	12m				170			Drive mode; multiplex	None ♦	PY955
21	LD8225	VFD	8	.18		2.8 *	12m				170			Drive mode; multiplex	None ♦	PY955
22	FG95A1	VFD	9	.19	65	3.0	22m	12m			200			7-Seg Numeric	EC1810ZZ	PY642d△
23	FG95F6	VFD	9	.19	65	3.6	6.3m	4.9m			200			7-Seg Numeric	EC1810ZZ	None
24	FG95K2	VFD	9	.19		28		8.5m	48		180		50k	14 Seg w/colon	EC189ZZ	PY641ah
25	FG95M1	VFD	9	.19		28		14m	48		180		50k	7-Seg w/Special Symbols	None	PY641ah
26	LD8231/FIP9C5	VFD	9	.19	5				16		80 Ø			Num;D.P.	EC209a	PY725
27	FG105E1	VFD	10	.19	65	3.6 *	22m	11m			180			14 Seg Alpha Numeric	EC1810ZZ	PY641g△
28	FG115F7	VFD	11	.19	65	3.7	12m	6.4m			200			7-Seg Numeric w/D.P.	EC1810ZZ	None
29	DC20026A2	VFD	40	.19		42		55m	48		200		50k	5x7 Dot Matrix	None	PY641an
30	DC16055A	VFD	80	.19		96		204m	48		800		50k	5x7 Dot Matrix	None	PY641am
31	FG85E2	VFD	8	196m	5	24	.05m	.60m	15	8.0u	250	24		14 Seg Alpha Num W/D.P.	EC1810ZZ	PY641
32	FG106A2	VFD	10	196m	5	24	.14m	1.5m	15	8.0u	250	24		14 Seg Alpha Num	EC1810ZZ	None
33	FIP40X6AA	VFD		197m		8.8 *	312m				200			Dot Matrix,240 digits	EC14260Z	PY1635b
34	FG85C1	VFD	8	197m	5	24	.07m	900u	15	8.0u	180	24		7-Seg Num W/DP	EC1810ZY	PY642c
35	FG95B1	VFD	9	197m	5	24	.08m	1.0m	15	8.0u	200	24		7-Seg Num W/DP	EC1810ZY	PY642d
36	FG95H6	VFD	9	197m	5	24	.08m	1.0m	15	8.0u	200	24		7-Seg Num W/DP	EC1810ZY	PY643
37	FG125A2	VFD	12	197m	5	24	.12m	1.3m	15	8.0u	200	24		7-Seg Num W/DP	EC1810ZY	PY646b
38	DC40046A	VFD	16	197m	5	50	.18m	.50m	15	8.0u	200	50		5X12 Dot Matrix W/Curser	EC1816ZZ	PY641ad
39	DC40066A	VFD	24	197m	5	50	100u	400u	15	8.0u	200	50		5x7 Dot Matrix W/Cursor,6 R	EC1816ZZ	PY641v
40	FG85D2	VFD	8	199m	5	24	156u	800u	05	8.0u	200	24		14 Seg Alpha Num W/DP	EC1810ZZ	PY641 ⊠
41	DC95A2	VFD	9	199m	5	24	.07m	500u	15	8.0u	250	24		5x7 Dot Matrix W/DP	EC189ZZ	PY641g⊠
42	DC165A2	VFD	16	199m	5	28	.07m	400u	15	8.0u	250	28		5x7 Dot Matrix	EC189ZZ	PY641i⊠
43	DC205A2	VFD	20	199m	5	35	100u	500u	15	8.0u	250	35		5x7 Dot Matrix	EC189ZZ	PY641l⊠
44	FIP20A5X	VFD	20	199m	5	5.7 *	56m				300			Dot Matrix,5X7	EC5820ZZ	PY1175
45	FIP20X1AA	VFD	20	199m		5.7 *	56m				300			Dot Matrix;5x7	EC5820ZZ	PY1175
46	FM20X1AA-D	VFD	20	199m	65	5.0	600m#		06		300		30k	Dot Matrix;5x7	None	PY1638
47	DC326A2	VFD	32	199m	5	40	.16m	400u	15	8.0u	250	40		5x7 Dot Matrix W/Cursor	EC189ZZ	PY641n⊠
48	DC405A2	VFD	40	199m	5	45	200u	800u	15	8.0u	250	45		5x7 Dot Matrix	EC189ZZ	PY641p⊠
49	DC406A2	VFD	40	199m	5	45	.16m	700u	15	8.0u	250	45		5x7 Dot Matrix W/Cursor	EC189ZZ	PY641q⊠
50	FIP20X2AA	VFD	40	199m		6.0 *	125m				250			Dot Matrix,5X7	EC7840ZZ	PY1176
51	FIP40C5X	VFD	40	199m		6.0 *	125m				250			Dot Matrix,5X7	EC7840ZZ	PY1176
52	FIP40E5X	VFD	40	199m		8.9 *	78m		16		200			Drive mode; multiplexed	None ♦	PY953
53	FIP40X1AA	VFD	40	199m		8.9 *	78m		16		200			Drive mode; multiplexed	None ♦	PY953
54	FIP40X1DA	VFD	40	199m		8.9 *	78m		16		200			Drive mode; multiplexed	None ♦	PY953
55	FIP40X1HB	VFD	40	199m		9.0 *	78m		16		200			Drive mode; multiplexed	None ♦	PY1634o
56	FM20X2AA-DA	VFD	40	199m	65	5.0	1.0 #		06		250		30k	Dot Matrix;5x7	None	PY1640
57	FM40X1AA-B	VFD	40	199m	65	5.0	1.0 #		06		200		30k	Dot Matrix;5x7	None	PY1641
58	FIP20X3AA	VFD	60	199m		4.8 *	156m				400			Drive mode; multiplexed	None ♦	PY1619
59	FIP60A5X	VFD	60	199m		4.8 *	156m				400			Drive mode; multiplexed	None ♦	PY1619
60	FIP40X2CC	VFD	80	199m		9.0 *	156m				200			Drive mode; multiplexed	None ♦	PY1634r
61	FIP4C5	VFD	4	.20		1.2 *	52m				500			Seg,7	EC154a	PY1122
62	FIP8B5	VFD	8	.20		3.2 *	12m				200			Seven Segment	EC198c	PY1190
63	LD8228	VFD	8	.20		3.0 *	12m				200			Seven Segment	EC198c	PY1190
64	FIP9C5	VFD	9	.20		3.3 *	13m				170			Drive mode; multiplex	None ♦	PY956
65	FIP9J5	VFD	9	.20		2.4 *	38m				300			Drive mode; multiplexed	None ♦	PY947
66	FIP9J5A	VFD	9	.20	5	2.4 *	38m		16	200u*	300			Drive mode; multiplexed	None ♦	PY947
67	FIP9K5	VFD	9	.20	5				16		200	24		Seven Segment	EC209a	PY956
68	LD8191/FIP9A5	VFD	9	.20	5	4.0	800u		16		170			Seven Segment Numeric	EC199c	PY842
69	LD8231	VFD	9	.20		3.3 *	13m				170			Drive mode; multiplex	None ♦	PY956
70	FIP10A5R	VFD	10	.20	5	1.0	2.0m		05		200			14 Segment Alpha-Numeric	EC2810a	None
71	FIP10C5R	VFD	10	.20	5				48		300	26		14 Segment Alpha-Numeric	EC2310a	PY1155
72	FG115A6	VFD	11	.20		3.6	22m	11m			200			7Seg Numeric for Calculator	EC1810ZZ	PY643c△
73	FG115C1	VFD	11	.20		4.2	18m	10m			200			7Seg Numeric for Calculator	EC1810ZZ	None
74	FG135E7	VFD	13	.20	65	4.2	22m	11m			200			7seg Numeric for Calculator	EC1810ZZ	None
75	FIP13C5	VFD	13	.20	5				16		200	24		Seven Segment	EC2413a	PY1188
76	FIP13E5A	VFD	13	.20		4.0 *	23m				200			Seven Segment	EC2912ZZ	PY1166
77	LD8224	VFD	13	200m	5	24	1.0m		06		100			Fl Indicator Panel;Dyn	EC2413a	PY492
78	DC80025B	VFD	16	.20		55	.20m		48	5.0u	250		50k	5X7 Dot Matrix	None	None
79	DE432A	VFD	32	.20	6 ⊠	5.0	650m#	2.8 #						32char;5x7 sq dot matrix	EC2610ZZ	None
80	FG405A2	VFD	40	.20		45		28m	48		200		50k	14 Seg w/Dec./Underscore	None	PY641ak
81	M6400A	VFD	40	.20	5 ⊠	5.0	1.8 #	15 #						6x40;5x7 dot matrix	EC2610ZZ	None
82	DC40026B2	VFD	80	.20		54	0.2m	38m	48	5.0u	250		50k	5x7 Dot Matrix	EC189ZZ	PY641t
83	FG115E7	VFD	10	206m	5	24	150u	1.2m	15	8.0u	180	24		7-Seg Num W/DP,Comma,Symbol	EC1810ZY	PY643b
84	FG135C1	VFD	12	209m	5	24	100u	1.1m	15	8.0u	180	24		7-Seg Num W/DP,Comma,Symbol	EC1810ZY	PY642g
85	FG46C5	VFD	4	.21		29		28m	48		400		50k	7-Seg w/Special Symbols	None	PY645
86	FIP32B5X	VFD	32	211m		6.8 *	78m				200			Dot Matrix,5X7	EC7032ZZ	PY1181
87	FIP32X1BA	VFD	32	211m		6.8 *	78m				200			Dot Matrix,5X7	EC7032ZZ	PY1181
88	FIP32X2AA	VFD	64	211m		6.8 *	156m				250			Drive mode; multiplexed	None ♦	PY1634p
89	FIP42X2AA	VFD	80	211m		9.2 *	156m				200			Drive mode; multiplexed	None ♦	PY1634t
90	FM40X2CB-AA	VFD	80	211m	65	5.0	1.3 #		06		200			Dot Matrix;5x7	None	PY1643
91	FG46A5	VFD	4	217m	5	28	214u	4.4m	05	8.0u	500	28		7-Seg W/Colon,Clock	EC1810ZY	PY645
92	FG206A2	VFD	20	217m	5	35	250u	1.4m	15	8.0u	250	35		14 Seg Alpha Num W/DP,Comma	EC1810ZZ	PY641d⊠
93	FG36A2	VFD	3	.22	65	1.7 *	38m				200			7-Seg Numerica	EC1810ZZ	None
94	FIP4A6	VFD	4	.22		1.5 *	52m				300			Seven Segment	EC164a	PY1118
95	FG116B7	VFD	11	.22	65	3.3	58m	22m			200			7Seg Numeric for Calculator	EC1810ZZ	None
96	FG116D6	VFD	11	.22	65	4.0	18m	9.6m			200			7Seg Numeric for Calculator	EC1810ZZ	PY643d△
97	FIP11A6A	VFD	11	.22		3.9 *	17m		16		200	24		Seven Segment	EC2610a	PY1158
98	FG116A6	VFD	10	226m	5	24	150u	1.2m	15	8.0u	200	24		7-Seg Num W/DP,Symbol	EC1810ZY	PY643c
99	FG116C6	VFD	11	226m	5	22	.08m	1.0m	15	8.0u	180	22		7-Seg Num W/DP	EC1810ZY	PY643d
100	FG146A6	VFD	14	.23		33		12m	48		200		50k	7-Seg w/Special Symbols	None	PY643f
101	FG326B2	VFD	32	.23	65	8.4 *	78m	36m			260			14 Seg Alpha Numeric	EC1810ZZ	PY641f△
102	FG126A2	VFD	12	236m	5	30	.18m	1.6m	15	8.0u	250	30		14 Seg Alpha Num W/DP,Comma	EC1810ZZ	PY641a⊠
103	FG166A2	VFD	16	236m	5	35	250u	1.7m	15	8.0u	250	35		14 Seg Alpha Num W/DP,Comma	EC1810ZZ	PY641b⊠
104	FG326A2	VFD	32	236m	5	45	.31m	1.7m	15	8.0u	250	45		14 Seg Alpha Num W/D.P.	EC1810ZZ	PY641f⊠
105	FG326B2A	VFD	32	236m	5	45	.43m	2.2m	48	8.0u	250	45		14 SegAlphaNumW/D.P.Comma	EC1810ZZ	None
106	FIP11D6	VFD	10	237m	5				16		200	20		Seg,7	EC2610c	PY1162
107	FIP4B6S	VFD	4	.24		1.6	57m				600			Seven Segment	EC364c	PY1053
108	FIP4E6S	VFD	4	.24	5				48		800	10		Seven Segment	EC384a	PY1193

SYMBOLS AND CODES EXPLAINED IN INTERPRETER

37. OTHER TECHNOLOGY DISPLAYS - Vacuum Fluorescent (Cont'd)

IN ORDER OF: (1) TYPE (2) CHAR. HEIGHT (3) No. CHAR. & (4) TYPE NUMBER

LINE No.	4 TYPE NUMBER	1 TYPE OF DIS-PLAY	3 NO. OF CHR	2 CHAR. HGHT. (in)	COLOR	D.C. VOLT (V)	D.C. CURR per seg (A)	PD per seg	TEMP RNG. CODE - +	RESP TIME (s)	LUMINANCE Lv (fL)	LUMINANCE V SUPP (V)	LIFE (hr)	FEATURES	SCHE-MATIC	DRAWING
1	FIP4F6S	VFD	4	.24		1.3	90m				800			Seven Segment	EC364b	PY1053
2	FIP6E6	VFD	4	.24	5	2.3	85m		16	250u*	450			Drive mode; multiplexed	None ♦	PY945
3	FIP10A6R	VFD	10	.24		3.9 *	16m				250			Alphanumeric	EC2810b	PY1154
4	FIP11F6	VFD	11	.24		3.5 *	22m				200			Seven Segment Numeric	EC2210a	PY643q
5	FIP16B6X	VFD	16	.24		4.3 *	78m		16	100u*	200			Drive mode; multiplexed	None ♦	PY948
6	FIP20B6R	VFD	20	.24		5.8 *	37m				300			Alphanumeric	EC3820a	PY1173
7	DE232	VFD	32	240m	%	54	10m#	1.8	05					1 Line;14 Seg;Period;ASCII	EC2610ZZ	PY518
8	FIP32B6R	VFD	32	.24		6.8 *	80m				260			Alphanumeric	EC4932a	PY641f
9	A65-40-0400	VFD	40	.24	6	5.0			07%					w/intelligent controller	EC4040ZZ	None
10	DC806A2	VFD	80	247m	5	55	.10m	.40m	15	8.0u	250	55		5X12 Dot Matrix	EC189ZZ	PY641ab
11	FG97L6	VFD	9	.25	65	3.7 *	38m	20m			240			14 Seg Alpha Numeric	EC1810ZZ	PY642eΔ
12	FG117C6	VFD	11	.25	65	3.9	37m	20m			200			7Seg Numeric for Calculator	EC1810ZZ	PY642eΔ
13	FG117D6	VFD	11	.25	65	4.4	22m	14m			200			7Seg Numeric for Calculator	EC1810ZZ	PY642eΔ
14	FG137D6	VFD	13	.25	65	5.5	22m	13m			200			7seg Numeric for Calculator	EC1810ZZ	PY643iΔ
15	FG137E7	VFD	13	.25	65	4.2	58m	23m			200			7seg Numeric for Calculator	EC1810ZZ	PY643eΔ
16	FG137F6	VFD	13	.25	65	4.4	22m	13m			200			7seg Numeric for Calculator	EC1810ZZ	PY643fΔ
17	FG157C7	VFD	15	.25		31		18m	48		200		50k	7-Seg w/Special Symbols	None	PY642l
18	FIP80A6X	VFD	80	.25		9.3	160m				200			Dot Matrix	EC14260Z	PY1055
19	FG117C7	VFD	10	256m	5	26	200u	2.0m	15	8.0u	200	26		7-Seg Num W/DP,Comma,Symbol	EC1810ZY	PY643e
20	FG137C6	VFD	12	256m	5	26	130u	1.2m	15	8.0u	200	26		7-Seg Num W/DP,Comma,Symbol	EC1810ZY	PY643f
21	FG137A1	VFD	13	256m	5	26	180u	1.5m	15	8.0u	200	26		7-Seg Num W/DP,Comma	EC1810ZY	PY642h
22	FG157C1	VFD	14	256m	5	26	200u	1.8m	15	8.0u	200	26		7-Seg Num W/DP,Comma,Symbol	EC1810ZY	PY642l
23	FG157D7	VFD	15	256m	5	26	.20m	1.6m	15	8.0u	180	26		7-Seg Num W/DP,Comma	EC1810ZY	PY643i
24	FIP4A8	VFD	4	.26	5				16		420	24		Seven Segment	EC164e	PY1119
25	FIP9D7	VFD	9	.26		4.4 *	23m				170			7-Segment	EC2848a	PY1152
26	FIP13A7	VFD	12	.26	5				06		170	26		Seven Segment	EC2812ZZ	PY1184
27	FIP13F7	VFD	13	.26		4.2 *	58m				250			Seven Segment	EC2812a	PY643p
28	LD8200	VFD	13	260m	5	26	2.0m		06		80			FI Indicator Panel;Dyn	EC2813ZZ	PY488
29	FIP15B7	VFD	14	.26		4.7 *	37m				200			Seven Segment	EC3214a	PY1169
30	FIP40A5AX	VFD	40	.26		8.9 *	78m		16	100u*	200			Drive mode; multiplexed	None ♦	PY953
31	FIP40A5X	VFD	40	.26		8.9 *	78m		16		200			Drive mode; multiplexed	None ♦	PY953
32	FIP80A5X	VFD	80	.26		8.0	15m		16		250			X-Y Dot Display	EC143	PY1054
33	FIP24A7X	VFD	20	266m		6.5 *	75m				200			Dot Matrix,5X7	EC13220a	PY1178
34	FIP24X1AA	VFD	24	266m		6.5 *	75m				200			Dot Matrix,5X12	EC13220a	PY1178
35	FG97C6	VFD	9	.27		3.9	37m	26m			200			7Seg Numeric for Calculator	EC1810ZZ	PY642eΔ
36	FG97D6	VFD	9	276m	5	26	.02m	2.6m	15	8.0u	200	26		7-Seg Num W/DP	EC1810ZY	PY643
37	FIP12AW7YS	VFD	12	.28		3.3 *	52m				300			Indicator Panel	EC3324ZZ	PY1044
38	CP2032	VFD	4	.29		29		35m	48		200		50k	7-Seg w/Special Symbols	None	PY642am
39	FG47A2	VFD	4	.29	65	1.6 *	84m				400			7-Seg Numeric w/Colon	EC1810ZZ	None
40	FG48A2	VFD	4	.29	65	1.7 *	78m				400			7-Seg Numeric w/Colon	EC1810ZZ	None
41	FG48B2	VFD	4	.29	65	1.7 *	106m				600			7-Seg Numeric w/Colon	EC1810ZZ	PY646iΔ
42	FG58G2	VFD	5	.29		14			48		400		50k	7-Seg w/Special Symbols	None	PY642ad
43	FG78C2	VFD	7	.29		14			48		300		50k	7-Seg w/Special Symbols	None	PY642ad
44	FG710C1	VFD	7	.29		29		37m	48		240		50k	7-Seg w/Special Symbols	None	PY641al
45	CP2006A	VFD	8	.29		40		47m	48		200		50k	7-Seg	None	PY642bb
46	FG38C2	VFD	3	.30	65	1.7 *	106m				200			7-Seg Numeric w/D.P	EC1810ZZ	PY646iΔ
47	FG48C2	VFD	4	300m	5	12	.14m	9.1m	48	8.0u	400	12		7-Seg W/Colon,Clock(Static)	EC1810ZY	PY646h
48	FG48E1	VFD	4	300m	5	24	.21m	4.1m	15	8.0u	400	24		7-Seg W/Colon,Clock	EC1810ZY	PY642ad
49	FG48E1A	VFD	4	.30	65	1.7 *	52m	29m			400			7-Seg Numeric w/Colon	EC1810ZZ	PY643nΔ
50	FG48K6	VFD	4	300m	5	24	.28m	7.5m	48	8.0u	400	24		7-Seg W/Colon,Clock	EC1810ZY	PY643n
51	FG48P2	VFD	4	300m	5	12	.11m	10m	48	8.0u	600	12		7-Seg W/Colon,Clock(Static)	EC1810ZY	PY646i
52	FG48W2	VFD	4	.30	65	1.7 *	104m				400			7-Seg Numeric w/Colon	EC1810ZZ	None
53	FG48X2	VFD	4	.30	65	1.7 *	78m				500			7-Seg Numeric w/Colon	EC1810ZZ	None
54	FG48Y2A	VFD	4	.30	65	1.7 *	78m				400			7-Seg Numeric w/Colon	EC1810ZZ	None
55	FIP4E8S	VFD	4	.30		1.4	78m				400			Drive mode; Static	None ♦	PY940
56	FIP4F8S	VFD	4	.30		1.7	78m				400			Drive mode; Static	None ♦	PY941
57	FIP5D8S	VFD	4	.30		1.7	78m				400			7-Segment,Static	EC364d	PY1127
58	FIP6A8A	VFD	4	.30	5				16		100 Ø			Num;Colon	EC224ZZ	PY735
59	FG58E2	VFD	5	.30	65	2.0	78m				200			7-Seg Numeric w/D.P.	EC1810ZZ	PY646hΔ
60	FIP5A8B	VFD	5	.30		1.7	78m				600			Seven Segment	EC165b	PY1126
61	FIP5F8S	VFD	5	.30		1.7	78m				400			Drive mode; Static	None ♦	PY943
62	FIP6A8B	VFD	6	300m		2.6 *	53m				200			Seg,7	None	PY1613
63	FG101SB	VFD		.31		42			48		200		50k	Bar Graph	None	PY646j
64	FIP6C8	VFD	4	.31	5				16		200			Numeric;1 Decimal Point	EC254a	PY707
65	FIP7A8S	VFD	4	.31		2.3 *	75m				250			Seven Segment	EC354b	PY1138
66	FIP7C8S	VFD	4	.31	5				16		200	15		Seven Segment	EC364e	PY1142
67	FIP6A8S	VFD	6	.31		2.3 *	75m				250			Static Drive	None	PY1138
68	FG78A1	VFD	7	.31	65	2.7	80m	56m			200			14 Seg Numeric	EC1810ZZ	None
69	FIP7B8S	VFD	7	.31		2.3 *	75m				250			Seven Segment	EC355b	PY1141
70	FIP7D8	VFD	7	.31		2.3 *	75m				200			Seven Segment	EC265a	PY1145
71	FIP7E8S	VFD	7	.31		3.0 *	78m				700			Seven Segment	EC365b	PY1144
72	FIP7F8S	VFD	7	.31		3.0 *	78m				700			Seven Segment	EC365c	PY1147
73	FIP7G8	VFD	7	.31		3.0 *	78m				200			Seven Segment	EC265b	PY1146
74	DE210	VFD	10	310m	%	34	10m#	1.3	05					1 Line;14 Seg;Com/Per;ASCII	EC2610ZZ	PY517
75	FG108A1	VFD	10	.31	65	4.8	57m	62m			200			14 Seg Numeric w/D.P.	EC1810ZZ	PY642
76	FIP11C8	VFD	10	.31	5				16		200	26		Seven Segment	EC2610b	PY1161
77	FG118E7	VFD	11	.31	65	4.0	37m	24m			200			7Seg Numeric for Calculator	EC1810ZZ	PY643eΔ
78	FIP13D8	VFD	11	.31	5				16		350	30		Seven Segment	EC3011a	PY1164
79	FIP13G8	VFD	12	.31	5	6.5	3.5m		27		170			7-Segment Numeric	EC4012a	PY1045
80	FG138G7	VFD	13	.31		31		29m	48		240		50k	7-Seg w/Special Symbols	None	PY643g
81	FIP13B8	VFD	13	.31	5	4.2 *	55m				200			Seven Segment	EC2812b	PY1163
82	FIP13C8	VFD	13	.31	5	4.2 *	55m				200			Seven Segment	EC2812c	PY1163
83	FIP13E8	VFD	13	.31		4.2 *	55m				200			Seven Segment	EC2812b	PY1163
84	FG108A1A	VFD	10	314m	5	24	.21m	2.5m	48	8.0u	250	24		14 Seg Alpha NumW/D.PComma	EC1810ZZ	PY642
85	FG48D6	VFD	4	315m	5	24	.22m	4.1m	48	8.0u	400	24		7-Seg W/Colon,Symbol,Clock	EC1810ZY	PY643m
86	FG108M1	VFD	10	315m	5	26	.31m	2.4m	15	8.0u	200	26		14 Seg Alpha Num W/DP,Comma	EC1810ZZ	PY642 Ø
87	FG118A1	VFD	10	315m	5	26	.11m	2.0m	15	8.0u	200	26		7-Seg Num W/DP,Comma,Symbol	EC1810ZY	PY642e
88	FG138A1	VFD	12	315m	5	26	.22m	2.3m	15	8.0u	200	26		7-Seg Num W/DP,Comma,Symbol	EC1810ZY	PY642i
89	FG138B7	VFD	12	315m	5	26	.33m	3.0m	15	8.0u	180	26		7-Seg Num W/DP,Comma,Symbol	EC1810ZY	PY643g
90	FIP6A8R	VFD	6	320m		2.4 *	125m				180			Alphanumeric	EC169	PY1133
91	FIP11B8X	VFD	11	.32		6.0	6.0m		16		200			X-Y Dot Display	EC4811ZZ	PY642ah
92	FIP12XM2AA	VFD	24	321m		4.6 *	189m		16	100u*	500			Drive mode; multiplexed	None ♦	PY1634k
93	FIP4C9	VFD	4	.33		2.3 *	75m				180			Drive mode; multiplexed	None ♦	PY939
94	FIP4C9B	VFD	4	.33		2.4 *	75m				180			Drive mode; multiplexed	None ♦	PY1052
95	DC209B2A	VFD	20	.34		35		43m			200			5x12 Dot Matrix	EC189ZZ	PY641aa
96	DC809B2	VFD	80	342m	5	60	.16m	.70m	15	8.0u	200	60		5X12 Dot Matrix	EC189ZZ	PY641ac
97	FIP20D9X	VFD	20	344m	5	5.0 *	78m				200			Dot Matrix,5X12	EC10420a	PY1174
98	FIP20X1EA	VFD	20	344m	5	5.0 *	78m				200			Dot Matrix,5X12	EC10420a	PY1174
99	DC269A2	VFD	26	344m	5	45	.25m	.80m	15	8.0u	250	45		5X12 Dot Matrix	EC189ZZ	PY641f
100	FIP26A9X	VFD	26	344m		5.7 *	78m				200			Dot Matrix,5X12	EC8826ZZ	PY1179
101	FIP26X1AA	VFD	26	344m		5.7 *	78m				200			Dot Matrix,5X12	EC8826ZZ	PY1179
102	DC209B2	VFD	20	346m	5	35	.16m	.70m	15	8.0u	250	35		5X12 Dot Matrix	EC189ZZ	None
103	DC329A2	VFD	32	346m	5	42	.13m	.60m	15	8.0u	250	42		5X12 Dot Matrix	None	PY641aa
104	DC409A2	VFD	40	346m	5	45	250u	700u	15	8.0u	250	45		5x12 Dot Matrix	EC189ZZ	PY641r
105	FIP40B9X	VFD	40	346m	5				16		200	45		Dot Matrix,5X12	EC10240Z	PY1182
106	FG80SB1GRY	VFD		.35		45			48		250		10k	Bar Graph	EC189ZZ	PY642an
107	CP2025GR	VFD	4	.35		32		86m	48		240		50k	7-Seg w/Special Symbols	None	PY642az
108	FG79B6	VFD	5	.35	65	5.2 *	55m				300			7-Seg Numeric w/Radio Freqs	EC1810ZZ	PY646jΔ
109	FG79C6	VFD	5	.35	65	5.2 *	55m				300			7-Seg Numeric w/Radio Freqs	EC1810ZZ	PY646jΔ
110	DC169A2A	VFD	16	.35		42		61m	48		200		50k	5x7 Dot Matrix	None	PY641j

SYMBOLS AND CODES EXPLAINED IN INTERPRETER

37. OTHER TECHNOLOGY DISPLAYS - Vacuum Fluorescent (Cont'd)

IN ORDER OF: (1) TYPE (2) CHAR. HEIGHT (3) No. CHAR. & (4) TYPE NUMBER

LINE No.	4 TYPE NUMBER	1 TYPE OF DIS-PLAY	3 NO. OF CHR	2 CHAR. HGHT. (in)	COLOR	D.C. VOLT (V)	CURR per seg (A)	PD per seg	TEMP RNG. CODE - +	RESP TIME (s)	LUMINANCE Lv (fL)	V SUPP (V)	LIFE (hr)	FEATURES	SCHE-MATIC	DRAWING
1	DE220	VFD	20	350m	%	44	20m#	2.3	05					1 Line;14 Seg;Com/Per;ASCII	EC2610ZZ	PY518
2	DE420A	VFD	20	.35	6 Ø	5.0	600m#	2.5 #						20char;5x7rnd dot matrix	EC2610ZZ	None
3	FG209A2	VFD	20	.35	65	6.4	120m	67m			200			14 Seg Numeric w/D.P.	EC1810ZZ	None
4	FIP20B9X	VFD	20	.35		5.1 *	78m		16	100u*	200			Drive mode; multiplexed	None ♦	PY950
5	FIP20C9X	VFD	20	.35		6.4 *	120m		16	100u*	200			Drive mode; multiplexed	None ♦	PY951
6	FIP32A9X	VFD	32	.35		8.4	78m				200			Dot Matrix	EC9432ZZ	PY641ag
7	DC169A2	VFD	16	354m	5	35	.21m	1.7m	15	8.0u	250	35		5x7 Dot Matrix	EC189ZZ	PY641jØ
8	DC209A2	VFD	20	354m	5	35	.21m	1.7m	15	8.0u	250	35		5x7 Dot Matrix	EC189ZZ	PY641mØ
9	FG209M2	VFD	20	354m	5	35	.62m	4.2m	15	8.0u	200	35		14 Seg Alpha Num W/DP,Comma	EC1810ZZ	PY641eØ
10	FG169B2	VFD	16	368m	5	40	.56m	4.7m	15	8.0u	250	40		14 Seg Alpha Num W/DP,Comma	EC1810ZZ	PY641cØ
11	FIP40A9X	VFD	80	368m		9.7 *	156m				250			Drive mode; multiplexed	None ♦	PY1634s
12	FIP40X2BA	VFD	80	368m		9.7 *	156m				250			Drive mode; multiplexed	None ♦	PY1634s
13	FG1210RA1	VFD		.37		42		87m	48		300		50k	7-Seg w/colon	None	PY643h
14	FG99D1	VFD	9	.37		3.8	55m	45m			200			7Seg Numeric	EC1810ZZ	PY642oΔ
15	FG119B7	VFD	11	.37	65	5.5	55m	39m			200			7Seg Numeric for Calculator	EC1810ZZ	PY643hΔ
16	FIP11B10	VFD	11	.37	5				16		100 Ø			Num;Colon	EC2511b	PY734
17	FIP13D10	VFD	12	.37	5				16		200	26		Seven Segment	EC3012b	PY1165
18	FIP13H10	VFD	12	.37		5.5 *	55m				250			Seven Segment	EC3012c	PY1167
19	FG139D1	VFD	13	.37	65	5.5	55m	36m			200			7seg Numeric for Calculator	EC1810ZZ	None
20	FG139E7	VFD	13	.37	65	5.5	55m	36m			200			7Seg Numeric for Calculator	EC1810ZZ	None
21	FG139N7	VFD	13	.37		31		33m	48		240		50k	7-Seg w/Special Symbols	None	PY642ba
22	FIP13C10	VFD	13	.37		5.5 *	55m				250			For Multiplex Drive	None	PY1626
23	FIP13K10	VFD	13	.37		5.5 *	55m				350			Seven Segment	EC3312ZZ	PY1168
24	FG159B7	VFD	15	.37	65	5.5	55m	36m			200			7Seg Numeric for Calculator	EC1810ZZ	PY643hΔ
25	FG169RA2	VFD	16	.37	65	5.1	117m	57m			20			7-Seg Numeric w/D.P.	EC1810ZZ	None
26	FIP17A10	VFD	16	.37		6.0 *	81m				170			Seven Segment	EC3316ZZ	PY1191
27	LD8230	VFD	16	.37		6.0 *	81m				170			Seven Segment	EC3316ZZ	PY1191
28	FG610A1	VFD	6	374m	5	24	.22m	4.9m	15	8.0u	200	24		7-Seg Num W/DP,+/-	EC1810ZY	PY642s
29	FG99A2	VFD	8	374m	5	24	.27m	3.9m	15	8.0u	200	24		7-Seg Num W/DP,Comma,Symbol	EC1810ZY	PY646
30	FG99C1	VFD	8	374m	5	24	.33m	4.0m	15	8.0u	200	24		7-Seg W/DP,Comma,Annunciato	EC1810ZY	PY642x
31	FG99E1	VFD	8	374m	5	24	.33m	4.0m	15	8.0u	200	24		7-Seg W/DP,Comma,Annunciato	EC1810ZY	PY642y
32	FG119A1	VFD	10	374m	5	30	.31m	4.4m	15	8.0u	200	30		7-Seg Num W/DP,Comma,Symbol	EC1810ZY	PY642f
33	FG139A1	VFD	12	374m	5	30	280u	3.5m	15	8.0u	200	30		7-Seg Num W/DP,Comma,Symbol	EC1810ZY	PY642j
34	FG139A3	VFD	12	374m	5	30	280u	3.5m	15	8.0u	200	30		7-Seg Num W/DP,Comma,Symbol	EC1810ZY	PY646c
35	FG139E1	VFD	12	374m	5	26	400u	3.6m	15	8.0u	180	26		7-Seg Num W/DP,Comma,Symbol	EC1810ZY	PY642k
36	FG139F7	VFD	12	374m	5	30	340u	3.6m	15	8.0u	200	30		7-Seg Num W/DP,Comma,Symbol	EC1810ZY	PY643h
37	FG159A2	VFD	14	374m	5	35	.38m	3.8m	15	8.0u	200	35		7-Seg Num W/DP,Comma,Symbol	EC1810ZY	PY646e
38	FG179A2	VFD	16	374m	5	35	.72m	4.8m	15	8.0u	200	35		7-Seg Num W/DP,Comma,Symbol	EC1810ZY	PY646f
39	FG715B1	VFD	4	.39	65	3.7	73m	346m			200			7-Seg Numeric w/Radio Freqs	EC1810ZZ	None
40	FG715D1	VFD	4	.39	65	3.7	73m	331m			200			7-Seg Numeric w/Radio Freqs	EC1810ZZ	None
41	FG510B1	VFD	5	.39	65	3.2 *	55m	45m			250			7-Seg Numeric w/Colon	EC1810ZZ	PY642sΔ
42	FG518B1	VFD	5	.39	65	2.0 *	200m	119m			250			7-Seg Numeric w/Colon	EC1810ZZ	None
43	FG710B1	VFD	5	.39	65	3.6	55m	202m			200			7-Seg Numeric w/Radio Freqs	EC1810ZZ	PY642af
44	DC610A2	VFD	6	.39		29		82m	48		200		50k	5x7 Dot Matrix	None	PY641al
45	FIP9B10	VFD	9	.39		3.5 *	75m				170			Seven Segment	EC219b	PY1150
46	FIP13C10A	VFD	13	.39	5 Ø				16		250			For Multiplex Drive	None	None
47	FG210B9	VFD	2	394m	5	12	.11m	18m	15	8.0u	400	12		7-Seg Num W/Triangle(Static	EC1810ZY	PY647
48	FG410E2	VFD	4	394m	5	15	150u	6.4m	15	8.0u	200	15		7-Seg Num W/DP,+/-(Static)	EC1810ZY	PY646g
49	FG410F1	VFD	4	394m	5	24	.31m	5.4m	15	8.0u	250	24		7-Seg Num W/DP,+/-	EC1810ZY	PY642m
50	FG510A1	VFD	5	394m	5	24	.26m	5.8m	15	8.0u	200	24		7-Seg Num W/DP,+/-	EC1810ZY	PY642n
51	FIP8B11	VFD	8	413m		3.0 *	100m				180			Seg,7	EC338a	PY1148
52	FG1211RA1	VFD	12	.42		33		77m	48		200		50k	14 Seg w/Colon	None	PY641ai
53	CP5011C	VFD	2	.43		21			48		360		50k	7-Seg w/Special Symbols	None	PY642bc
54	FIP5A11S	VFD	4	.43	5	15	1.3m		16		200			7-Seg,Num,AM/PM,Alarm	EC122	PY1043
55	FIP8A11	VFD	8	.43		3.5 *	78m				160			Seven Segment	EC188b	PY1186
56	FIP16B11X	VFD	16	.43		8.3 *	106m		16	100u*	300			Drive mode; multiplexed	None ♦	PY949
57	FG511E6	VFD	5	433m	5	24	.43m	7.7m	15	8.0u	200	24		7-Seg Num W/DP,+/-,Arrow	EC1810ZY	PY643k
58	FG48SD1BGLR	VFD		.44		18			48		100		50k	Bar Graph	None	PY641ag
59	FG48SD1BGRY	VFD		.44		150			48		100		10k	Bar Graph	EC189ZZ	PY641ag
60	FG48SD1GR	VFD		.44		18			15					Bar Graph	None	PY641ag
61	DC1612B2A	VFD	16	.44		42		111m	48		200		50k	5x7 Dot Matrix	None	PY641k
62	DC1612C2A	VFD	16	.44		51		123m	48		200		50k	5x7 Dot Matrix	None	PY641k
63	DC1612D2	VFD	16	.44		51		142m	48		200		50k	5x7 Dot Matrix	None	PY641k
64	DC1612B2	VFD	16	445m	5	35	540u	3.0m	15	8.0u	250	35		5x7 Dot Matrix W/DP,Comma	EC189ZZ	PY641kØ
65	DC1612C2	VFD	16	445m	5	43	.73m	3.2m	15	8.0u	250	43		5X7 Dot Matrix W/D.P. Comma	EC189ZZ	None
66	FIP20XM1AA	VFD	20	445m		9.6 *	156m		16	100u*	500			Drive mode; multiplexed	None ♦	PY1634i
67	FIP20XM1BA	VFD	20	445m		9.6 *	130m		16	100u*	500			Drive mode; multiplexed	None ♦	PY1634j
68	FIP32A11X	VFD	32	445m		8.3 *	212m				300			Dot Matrix,5X7	EC9232ZZ	PY1180
69	FIP32X1AA	VFD	32	445m		8.3 *	212m				300			Dot Matrix,5X7	EC9232ZZ	PY1180
70	FIP20X2CA	VFD	40	445m		9.5 *	212m				250			Dot Matrix,5X7	None	PY1634m
71	FIP20X4AA	VFD	80	445m		9.0 *	432m				175			Drive mode; multiplexed	None ♦	PY1634q
72	FIP40X2CB	VFD	80	445m		9.0 *	156m				250			Drive mode; multiplexed	None ♦	PY1622c
73	FG28SB1	VFD		.45		15					200			Bar Graph	EC189ZZ	PY641ad
74	FG28SB1GR	VFD		.45		150					200			Bar Graph	EC189ZZ	PY641ad
75	FG28SL1	VFD		.45		18			15		100			Bar Graph	None	PY641ad
76	FG620A1	VFD	6	.45	65	2.5 *	200m	162m			250			7-Seg Numeric w/Colon	EC1810ZZ	None
77	FG1612A2	VFD	16	.45		57		142m	48		250		50k	14 Seg w/Colon	None	PY641aj
78	FG619B1	VFD	4	453m	5	26	750u	10m	15	8.0u	250	26		7-Seg W/Colon,Annunciat,Clk	EC1810ZY	PY642ah
79	FG612A1	VFD	6	453m	5	24	.37m	6.5m	15	8.0u	200	24		7-Seg Num W/DP,+/-	EC1810ZY	PY642t
80	FIP6B12S	VFD	4	465m	5				16		200	12		Seg,7	EC334d	PY1134
81	FIP4B9	VFD	4	.47		2.4 *	75m				180			7-Segment Numeric	EC254ZZ	PY1051
82	FIP5H13S	VFD	4	.47		2.4 *	75m				200			7-Segment	EC139	PY1125
83	FG520A1	VFD	5	.47	65	2.6 *	200m	156m			250			7-Seg Numeric w/Colon	EC1810ZZ	None
84	FIP12A11R	VFD	12	.47		5.9	104m				350			Alphanumeric	EC3012a	PY642ae
85	FIP16A11R	VFD	16	.47		8.0 *	104m				350			14 Segment Alpha-Numeric	EC3416a	PY642af
86	FG412D1	VFD	4	472m	5	26	.42m	9.9m	15	8.0u	250	26		7-Seg W/Colon,AM,PM,Clock	EC1810ZY	PY642ae
87	FG512A1	VFD	5	472m	5	24	.37m	7.2m	15	8.0u	200	24		7-Seg Num W/DP,+/-	EC1810ZY	PY642o
88	FG912E1	VFD	7	472m	5	35	.66m	11m	15	8.0u	250	35		7-Seg W/DP,Comma,Kg,Symbol	EC1810ZY	PY642z
89	FIP9A12	VFD	9	488m		4.6 *	54m				360			Seg, 7	None	PY1615b
90	FIP9A12A	VFD	9	488m		4.6 *	54m				360			Seg, 7	None	PY1618
91	LD8185	VFD	9	488m		4.6 *	54m				360			Seg, 7	None	PY1615b
92	FG28SJ1	VFD		.49		15					200			Bar Graph	EC189ZZ	PY641af
93	FG213C10	VFD	2	.49	65	1.5	74m				300			7-Seg Numeric	EC1810ZZ	None
94	FG213D10	VFD	2	.49		16			48		300		50k	7-Seg w/Special Symbols	None	PY647a
95	FG913B1	VFD	9	.49	65	3.9	160m	102m			200			7-Seg Numeric w/D.P.	EC1810ZZ	None
96	FIP2A13	VFD	2	492m		1.7 *	58m				250			Seg,7	EC122a	PY1117
97	FG413D1	VFD	4	492m	5	26	500u	13m	15	8.0u	250	26		7-Seg W/Colon,Clock	EC1810ZY	PY642af
98	FIP4C13A	VFD	4	492m		2.3 *	100m				200			Seg,7	EC164c	PY1123
99	FIP4C13C	VFD	4	492m		2.4 *	100m				200			Seg,7	EC164c	PY1123
100	FIP4F13S	VFD	4	492m		2.4 *	75m				200			7-Seg,Static	EC344c	PY1125
101	FIP5D13A	VFD	4	492m		2.3 *	75m				180			Seg,7	EC204a	PY1128b
102	FG512F1	VFD	5	492m	5	26	.56m	11m	15	8.0u	200	26		7-Seg Num W/Colon,DP,Symbol	EC1810ZY	PY642p
103	FIP7C13	VFD	5	492m		3.4 *	104m		16		200			Seg,7	EC365a	PY1143
104	FIP6C13	VFD	6	492m		3.0 *	100m				200			Seg,7	EC206b	PY1136
105	FIP6L13	VFD	6	492m		3.0 *	75m				200			Drive mode; multiplexed	None ♦	PY485
106	FIP7A13	VFD	7	492m		3.2 *	100m		16		200			Seg,7	EC355a	PY1140
107	FIP7A13A	VFD	7	492m		3.2 *	100m		16		200			Seg,7	EC355a	PY1140
108	FIP9A13A	VFD	9	492m		4.6 *	75m				200			Seg, 7	EC219a	PY1149
109	FIP9C13	VFD	9	492m		3.9 *	140m				200			Seg, 7	EC279b	PY1151
110	FIP10A13	VFD	10	492m	5				16		200	45		Seg, 7	EC2210c	PY1189

SYMBOLS AND CODES EXPLAINED IN INTERPRETER

37. OTHER TECHNOLOGY DISPLAYS - Vacuum Fluorescent (Cont'd)

IN ORDER OF: (1) TYPE (2) CHAR. HEIGHT (3) No. CHAR. & (4) TYPE NUMBER

LINE No.	4 TYPE NUMBER	1 TYPE OF DIS-PLAY	3 NO. OF CHR	2 CHAR. HGHT. (in)	COLOR	D.C. VOLT (V)	D.C. CURR per seg (A)	PD per seg	TEMP RNG. CODE - +	RESP TIME (s)	LUMINANCE Lv (fL)	LUMINANCE V SUPP (V)	LIFE (hr)	FEATURES	SCHE-MATIC	DRAWING
1	FIP10C13	VFD	10	492m	5				16		190	43		Seg,7	EC2210b	PY1189a
2	FIP11A13	VFD	10	492m		4.8 *	120m				200			Seg,7	EC2810ZZ	PY1159
3	LD8227	VFD	10	492m	5				16		200	45		Seg, 7	EC2210c	PY1189
4	FIP16B13R	VFD	16	492m		7.2 *	75m				300			Alphanumeric	EC3716a	PY1170
5	FG213B9	VFD	2	496m	5	12	.14m	20m	15	8.0u	400	12		7-Seg Num W/Triangle(Static	EC1810ZY	PY647a
6	FIP4A13S	VFD	4	496m		2.4 *	75m				200			Seg, 7	EC344b	PY1124
7	FIP4B13	VFD	4	496m		2.3 *	75m				250			Seg, 7	EC174a	PY1192
8	FIP4E13S	VFD	4	496m		2.3 *	108m				300			Seg,7	EC344b	PY1124
9	FIP5B13S	VFD	4	496m		3.0 *	58m				250			7-Segment,Static	EC354a	PY726
10	FIP5F13	VFD	4	496m	5				16		200	32		Seg,7	EC154b	PY1131
11	FIP5G13	VFD	4	496m	5				16		180	26		Seg,7	EC204a	PY1128
12	LD8213	VFD	4	496m		2.3 *	75m				200			Fl Indicator Panel;Static	None	PY1124
13	LD8241	VFD	4	496m		2.3 *	75m				250			Seg, 7	EC174a	PY1192
14	FG713ES1	VFD	7	496m	5	35	.55m	13m	15	8.0u	250	35		7-Seg Num W/DP,Symbol	EC1810ZY	PY642v
15	FG913ES1	VFD	9	496m	5	35	500u	11m	15	8.0u	250	35		7-Seg W/DP,Symbol	EC1810ZY	PY642aa
16	FG1213RF1	VFD		.51		42		120m	48		300		50k	7-Seg w/colon	None	PY642ac
17	FIP6F13	VFD	6	.51		3.2 *	100m				360			Drive mode; multiplexed	None ♦	PY946
18	FIP10B13	VFD	10	.51		5.0 *	120m				200			Seven Segment	EC2610d	PY1187
19	FIP10B13A	VFD	10	.51		5.0 *	120m				200			Seven Segment	EC2610d	PY1187a
20	FIP10D13	VFD	10	.51		5.0 *	120m				350			Seven Segment	EC2510b	PY1157
21	LD8221	VFD	10	.51		5.0 *	120m				200			Seven Segment	EC2610d	PY1187
22	FIP11B13	VFD	11	.51		5.5 *	78m				250			7-Segment Numeric	EC2611a	PY642aq
23	FG1213RB5	VFD	12	.51	65	5.2	120m	80m			200			7-Seg Numeric w/D.P.	EC1810ZZ	PY641c
24	FG1213RE1	VFD	12	.51	65	5.9	106m	77m			200			7-Seg Numeric w/D.P.	EC1810ZZ	PY642ac
25	FIP12A13	VFD	12	.51		5.9 *	106m				350			7-Segment Numeric	EC2612a	PY642ad
26	FG1013RS1	VFD	10	512m	5	35	.45m	8.0m	15	8.0u	200	35		7-Seg W/DP,Comma,Annunciato	EC1810ZY	PY642ac
27	FG1213A1	VFD	12	519m	5	28	500u	5.6m	15	8.0u	250	28		14 Seg Alpha Num W/DP,Comma	EC1810ZZ	PY642a☑
28	FIP7B13	VFD	7	.52		3.3 *	104				250			7-Segment Numeric	EC337a	PY1049
29	FG24SD1GLR	VFD		.55		18			48		250		50k	Bar Graph	None	PY642an
30	FG24SD1GRY	VFD		.55		150					250			Bar Graph	EC189ZZ	PY641ac
31	FG514A1	VFD	5	550m	5	35	.77m	10m	15	8.0u	250	35		8 Seg Num W/DP	EC1810ZY	PY642q
32	FG614A1	VFD	6	550m	5	35	1.0m	11m	15	8.0u	250	35		8 Seg Num W/DP,Comma	EC1810ZY	PY642u
33	FG914RB1	VFD	9	.55	65	5.7	73m	78m			250			7-Seg Numeric w/D.P.	EC1810ZZ	PY642f
34	FG914RB	VFD	9	550m	5	30	.72m	8.7m	15	8.0u	250	30		7-Seg W/DP,Comma,Symbol	EC1810ZY	PY644a
35	DC1015A2	VFD	10	551m	5	35	.21m	3.0m	15	8.0u	250	35		5x7 Dot Matrix W/DP,Comma	EC189ZZ	PY641h☑
36	FG28SD1	VFD		.57		15					200			Bar Graph	EC189ZZ	PY641ae
37	FG415E6	VFD	4	570m	5	24	.62m	12m	15	8.0u	200	24		7-Seg Num W/DP,+/-,Arrow	EC1810ZY	PY643j
38	FG715RS1	VFD	7	570m	5	35	.77m	15m	15	8.0u	250	35		7-Seg W/DP,Comma,Annunciato	EC1810ZY	PY642w
39	FG915R1	VFD	9	570m	5	35	.77m	13m	15	8.0u	250	35		7-Seg W/DP,Comma,Symbol	EC1810ZY	PY642ab
40	FG1115RC1	VFD		.59		42		146m	48		200		50k	7-Seg w/colon	None	PY643l
41	FG415C1	VFD	4	.59		18			48		300		50k	7-Seg w/Special Symbols	None	PY642aw
42	FG515B7	VFD	4	590m	5	15	.21m	17m	15	8.0u	250	15		7-Seg W/Colon,AM,PM,ALM,Clk	EC1810ZY	PY643o
43	FIP4A15	VFD	4	.59	5				16		200	30		Seven Segment	EC164b	PY1120
44	FIP5A15S	VFD	4	.59	5				06		220	18		Seven Segment	EC334b	PY1130
45	FIP5E15S	VFD	4	.59		3.0 *	75m				220			7-Segment,Static	EC334c	PY1130
46	FG515B6	VFD	5	.59	65	3.4 *	106m				250			7-Seg Numeric for Clock	EC1810ZZ	PY642ai
47	FG515F1	VFD	5	.59	65	4.0 *	73m	90m			200			7-Seg Numeric for Clock	EC1810ZZ	PY642ai
48	FG516B1	VFD	5	590m	5	45	1.7m	14m	15	8.0u	250	45		7-Seg Num W/DP,Comma	EC1810ZY	PY642r
49	FIP5B15	VFD	5	.59		3.3 *	100m				180			Drive mode; multiplexed	None ♦	PY942
50	FIP5H15	VFD	5	.59		3.2 *	150m				700			Drive Mode,Multiplexed	None ♦	PY944
51	FG715G2	VFD	6	.59		36		146m	48		360		50k	7-Seg w/Special Symbols	None	PY642av
52	FIP6C15	VFD	6	.59		3.7 *	150m				700			7-Segment Numeric	EC236ZZ	PY1050
53	FIP7AM15	VFD	6	.59	5				16		350	30		Seven Segment	EC376a	PY1139
54	FG1215RB6	VFD	12	590m	5	35	.83m	12m	15	8.0u	180	35		7-Seg W/DP,Symbol	EC1810ZY	PY643l
55	FIP24A15YS	VFD	24	.59		3.0 *	100m				180			For Static Drive	None	PY1615a
56	FIP6D15	VFD	5	591m	5				16		300	35		Seg,7	EC285a	PY1137
57	DM128X24A	VFD		.60		70		2.1	48		150		50k	Graphic Display Panel	None	PY642av
58	LD8196	VFD	5	600m	5	18	1.5m		06		100			Fl Indicator Panel;Static	EC334b	PY485
59	DC2015B2	VFD	20	.60		35	.20m		48		250		50k	5X7 Dot Matrix	None	None
60	FG816A	VFD	8	.62	65	6.2 *	106m	138m			200			7-Seg Numeric w/Plus/D.P.	EC1810ZZ	PY642ac
61	FIP20X1KA	VFD	20	624m		8.3 *	130m		16	100u*	200			Drive mode; multiplexed	None ♦	PY1634g
62	FIP20X2BA	VFD	40	624m		8.0 *	260m				200			Dot Matrix,5X7	None	PY1634n
63	FIP18A14R	VFD	18	.63	5 ☑				16		200			For Multiplex Drive	None	None
64	FIP24BW16YS	VFD	24	.63		3.2 *	100m				300			Static; Bar Graph	None ♦	PY952
65	FG24SC1	VFD		.64		18			48		200		50k	Bar Graph	None	PY642ai
66	FG24SG1	VFD		.64		15					200			Bar Graph	EC189ZZ	PY642ai
67	DM256X26B	VFD		656m	5	45	192u	400u	05	8.0u	200	45		258x26 Dot Matrix Column	EC181ZZ	PY648b
68	M26X256	VFD	42	.66	6 ☑	5.0	2.5 #	9.0 #						Arabic,Kanji	None	None
69	FIP24A17YS	VFD		.67	5 ☑				16		180			For Static Drive	None	None
70	FG80SB1GLR	VFD		.71		38			48		250		50k	Bar Graph	None	PY642an
71	FG80SB6	VFD		.71		32			48		250		10k	Bar Graph	EC189ZZ	PY642an
72	FIP10AW19Y	VFD	10	728m		3.2 *	130m		16		150			Seg,7	None	PY1630
73	FG620F1	VFD	4	.78		22			48		200		50k	7-Seg w/Special Symbols	None	PY641ab
74	CP1007GL	VFD		.83		27			48		200		10k	Bar Graph	EC189ZZ	PY642ap
75	FG425A1	VFD	4	984m	5	35	.92m	27m	15	8.0u	250	35		7-Seg W/Colon,AM,PM,Clock	EC1810ZY	PY642ag
76	CP1005	VFD		1.0		23			48		200		10k	Bar Graph	EC189ZZ	PY642ao
77	FIP6A25	VFD	6	1	5				16		180	35		Seg,7	EC356a	PY1135
78	FIP7B25	VFD	7	1.0		5.5 *	125m				200			7-Segment	None	PY1617
79	FIP36A10XT	VFD		1.2		9.2	234m				200			128x20,Graphic	EC14620Z	PY1046
80	FIP60B30T	VFD	60	1.4		2.7 *	196m				200			Analogue Clock display	None ♦	PY954
81	DM256X64A	VFD		1.6		100		9.2	48		200		50k	Graphic Display Panel	None	PY642ax
82	DM41X40C	VFD		1.8		85		1.6	48		150		50k	Graphic Display Panel	None	PY642ar
83	DM41X40B	VFD	16	1.8	5	70	.20m	.90m	15	8.0u	200	45		41X40DotMatrixGraphicPanel	EC181ZZ	None
84	DM128X128C	VFD		3.0		85		5.0	48		125		50k	Graphic Display Panel	None	PY642at
85	DM400B	VFD		3.0	5	35	250u	4.5m	15	8.0u	200	35		20x20 Dot Matrix Graphic Pa	EC181ZZ	PY648
86	M128	VFD	21	3.0	6 ☑	5.0	3.5 #	13 #						Arabic,Kanji	None	None
87	DM64X64B	VFD		3.1		85		6.1	48		150		50k	Graphic Display Panel	None	PY642as
88	DM80X80C	VFD		3.1		85		5.5	48		150		50k	Graphic Display Panel	None	PY642as
89	DM64X64A	VFD	16	3.1	5	70	.20m	1.2m	15	8.0u	200	70		64X64DotMatrixGraphicPanel	EC181ZZ	None
90	FM180GX48BA-A	VFD		3.5 *	65	5.0	1.2 #		06		200		30k	48x180 Dot Graphic	None	PY1646
91	FM80X2AA-A	VFD	40	3.5 *	65	5.0	1.3 #		06		150		30k	160 Chrctr;5x7	None	PY1645
92	DM256X256B	VFD		4.0		145		7.9	48		80		50k	Graphic Display Panel	None	PY642au
93	FIP16X1EA	VFD	16	4.0 *		4.2 *	22m				200			Dot Type; multiplexed	None ♦	PY1634a
94	FIP12A4	VFD	12	4.2 *		3.7 *	16m				200			Num;Colon	None	PY1612
95	LD8197A	VFD	12	4.2 *		3.7 *	16m				200			Num;Colon	None	PY1612
96	FIP9D5	VFD	9	4.5 *		3.2 *	16				180			Num;D.P.	None	PY730
97	FIP17A5	VFD	17	4.5 *		4.5 *	22m				200			Seg,7	None	PY1608d
98	FIP4H5	VFD	4	5.0 *		1.5	40m				300			Seg,7	None	PY1633a
99	FIP8A5AR	VFD	8	5.0 *		3.0 *	22m				200			Alphanumeric	None	PY1622d
100	FIP8A5R	VFD	8	5.0 *		3.0 *	22m				200			Alphanumeric	None	PY1622d
101	FIP9A5	VFD	9	5.0 *		3.4 *	12m				170			Fl Indicator Panel;Dyn	EC198b	PY482
102	FIP9A5AR	VFD	9	5.0 *		3.4 *	22m				200			Alphanumeric	None	PY1622e
103	FIP9K5A	VFD	9	5.0 *		3.0 *	23m				200			Drive mode; multiplexed	None ♦	PY1620a
104	FIP9LM6	VFD	9	5.0 *		2.8 *	106m		16		280			Seg,7	None	PY1624
105	LD8191	VFD	9	5.0 *		3.4 *	12m				170			Fl Indicator Panel;Dyn	EC198b	PY482
106	FIP16A5CR	VFD	16	5.0 *		4.8	40m				360			Num/Alph	None	PY708
107	FIP16A5R	VFD	16	5.0 *		5.5	17m				200			Num/Alph	None	PY708
108	FIP16X1CA	VFD	16	5.0 *		5.2 *	23m				200			Dot Type; multiplexed	None ♦	PY1634b
109	FIP16X1KA	VFD	16	5.0 *		5.2 *	34m				250			Dot Type; multiplexed	None ♦	PY1634d
110	FIP20X1LB	VFD	20	5.0 *		5.6 *	38m				200			Drive mode; multiplexed	None ♦	PY1631a

SYMBOLS AND CODES EXPLAINED IN INTERPRETER

37. OTHER TECHNOLOGY DISPLAYS - Vacuum Fluorescent (Cont'd)

IN ORDER OF: (1) TYPE (2) CHAR. HEIGHT (3) No. CHAR. & (4) TYPE NUMBER

LINE No.	4 TYPE NUMBER	1 TYPE OF DISPLAY	3 NO. OF CHR	2 CHAR. HGHT. (in)	COLOR	D.C. VOLT (V)	D.C. CURR per seg (A)	PD per seg	TEMP RNG. CODE - +	RESP TIME (s)	LUMINANCE Lv (fL)	LUMINANCE V SUPP (V)	LIFE (hr)	FEATURES	SCHE-MATIC	DRAWING
1	FM40X6AA-A	VFD	40	5.0 *	65	5.0	2.5 #		06		200		30k	240 Chrctr;5x7	None	PY1644
2	80B5R	VFD	80	5.0 *		9.5 *	126m				200			14 Segment,2 Lines	None	PY1637
3	FIP12A5A	VFD	12	5.2 *		4.5 *	16m				200			Num;Colon	None	PY1610
4	FIP12A5B	VFD	12	5.2 *		4.5 *	16m				200			Num;Colon	None	PY1608a
5	FIP14A5	VFD	14	5.2 *		3.8 *	38m				170			Seg,7	None	PY1609f
6	LD8232	VFD	14	5.2 *		3.8 *	38m				170			Seg,7	None	PY1609f
7	FIP13F5	VFD	13	5.3 *		4.2 *	22m				250			Seg,7	None	PY1620e
8	FIP8A6R	VFD	8	5.5 *		2.3 *	78m				400			Alphanumeric	None	PY1614
9	FIP9B6	VFD	9	5.5 *		4.4 *	14m		16		170			Seg,7	None	PY1628b
10	FIP9B6A	VFD	9	5.5 *		4.4 *	14m		16		170			Seg,7	None	PY1628b
11	FIP6F6	VFD	6	6.0 *		2.3	85m				450			Num	None	PY1609b
12	FIP11D6A	VFD	11	6.0 *		4.0 *	18m		16		200	24		Seg,7	None	PY1625b
13	FIP16X1BA	VFD	16	6.0 *		4.3 *	78m		16	100u*	200			Drive mode; multiplexed	None ♦	PY948
14	FIP17X1AA	VFD	17	6.0 *		4.4 *	78m				800			Drive mode; multiplexed	None ♦	PY1632
15	FIP32A6R	VFD	32	6.0 *		7.5 *	50m				250			Alphanumeric	None	PY1621a
16	FIP32D6R	VFD	32	6.0 *		8.4 *	78m				260			Alphanumeric	None	PY641f
17	FIP80X1AA	VFD	80	6.3 *		9.3	160m				200			Dot Matrix	EC14260Z	PY1055
18	FIP13A7B	VFD	13	6.5 *		5.4 *	22m				170			Seg,7	None	PY1608b
19	FIP9BM12	VFD	9	7.0 *		3.6 *	135m		16		200			Seg,7	None	PY1633b
20	FIP13C7	VFD	13	7.0 *		4.5 *	22m				250			Seg,7	None	PY1620f
21	FIP101B8AY	VFD		7.6 *		5.4 *	78m				400			Bar Graphic,101	None ♦	PY721
22	FIP4A8S	VFD	4	7.6 *		1.7	78m				400			FI Indicator Panel;Static	EC56	PY480
23	FIP4B8	VFD	4	7.6 *		1.7	78m				420			Num;Colon	EC164e	PY480
24	FIP4B8AS	VFD	4	7.6 *		1.7 *	78m				750			Num;Colon	EC92	PY480
25	FIP4B8B	VFD	4	7.6 *		1.7 *	78m				400			Seg,7	None	PY1609d
26	FIP4E8AS	VFD	4	7.6 *		1.4 *	78m				600			Drive mode; Static	None ♦	PY1631b
27	FIP4E8BS	VFD	4	7.6 *		1.4	78m				600			Drive mode; Static	None ♦	PY1631b
28	FIP4S8S	VFD	4	7.6 *		1.7	104m				800			Drive mode; Static	None ♦	PY480
29	FIP4Y8S	VFD	4	7.6 *		1.5	110m				800			Drive mode; Static	None ♦	PY1631c
30	LD8164	VFD	4	7.6 *		1.7	78m				400			FI Indicator Panel;Static	EC56	PY480
31	FIP5C8S	VFD	5	7.6 *		1.7	78m				400			Num	EC405a	PY719
32	FIP5D8	VFD	5	7.6 *		1.7 *	78m				400			Num;Colon	EC165a	PY727
33	FIP6F8	VFD	6	7.6 *		2.3	78m				500			Num	None	PY1609c
34	FIP9B8	VFD	9	7.6 *		3.2 *	75m				180			Num;Colon	EC96	PY729
35	FIP9B8B	VFD	9	7.6 *		3.2 *	75m				300			Num;Colon	EC96	PY729
36	FIP9B8Y	VFD	9	7.6 *		1.7	78m				400			Static	None	PY1609d
37	FIP9F8	VFD	9	7.6 *		3.2 *	75m				300			Num;Colon	None	PY1620b
38	FIP14A8T	VFD	11	7.6 *		1.7	78m				400			Static	None	PY1609d
39	LD8180	VFD	11	7.6 *		1.7	78m				400			Static	None	PY1609d
40	FIP13H8	VFD	13	7.6 *		6.1 *	23m				170			Seg,7	None	PY1616
41	FIP48A8XT	VFD		7.9 *		3.0 *	78m				300			48x7,Graphic	None	PY1623a
42	FIP48GX7AA	VFD		7.9 *		3.0 *	78m				300			48x7,Graphic	None	PY1623a
43	FIP72GX7AA	VFD		7.9 *		3.0 *	78m				240			72x7,Graphic	None	PY1623b
44	FIP4Q8S	VFD	4	8.0 *		1.5	110m				800			Drive mode; Static	None ♦	PY1631d
45	FIP7A8AS	VFD	4	8.0 *		2.3 *	75m				250			Seg,7	EC354b	PY1138
46	FIP7B8AS	VFD	7	8.0 *		2.3 *	75m				250			Seg,7	EC355b	PY1141
47	FIP7D8A	VFD	7	8.0 *		2.3 *	75m				200			Seg, 7	None	PY1611a
48	FIP7D8F	VFD	7	8.0 *		2.3 *	75m				200			Seg, 7	None	PY1629
49	FIP7G8A	VFD	7	8.0 *		3.0 *	78m				200			Seg, 7	EC265b	PY1611a
50	FIP7G8D	VFD	7	8.0 *		3.0 *	78m				200			Seg, 7	EC265b	PY1629
51	FIP7P8	VFD	7	8.0 *		2.3 *	106m				400			Seg, 7	EC265b	PY1624
52	FIP7P8A	VFD	7	8.0 *		2.3 *	106m				400			Seg, 7	EC265b	PY1628a
53	FIP7Q8	VFD	7	8.0 *		2.3 *	106m				260			Seg, 7	EC265b	PY1624
54	FIP7Q8A	VFD	7	8.0 *		2.3 *	106m				260			Seg, 7	EC265b	PY1628a
55	FIP11B8A	VFD	11	8.0 *		4.5 *	22m				220			Num;Colon	EC2211a	PY733
56	FIP11C8A	VFD	11	8.0 *		4.5 *	22m				200			Num;Colon	None	PY1620c
57	FIP11C8B	VFD	11	8.0 *		4.5 *	22m				250			Num;Colon	None	PY1620c
58	FIP13C8A	VFD	13	8.0 *		4.2 *	55m				200			Seg,7	EC2812c	PY1163
59	FIP20X1CA	VFD	20	8.8 *		5.1 *	78m		16	100u*	200			Drive mode; multiplexed	None ♦	PY950
60	FIP32X1CA	VFD	32	8.8 *		8.4	78m				200			Dot Matrix	EC9432ZZ	PY641aq
61	FIP40B9AX	VFD	40	8.8 *		9.7 *	78m				200			Drive mode; multiplexed	None ♦	PY1622a
62	FIP40C9X	VFD	40	8.8 *		9.7 *	104m				200			Drive mode; multiplexed	None ♦	PY1620b
63	FIP40X1FB	VFD	40	8.8 *		9.7 *	78m		16		200			Drive mode; multiplexed	None ♦	PY1622a
64	FIP40X1GA	VFD	40	8.8 *		9.7 *	104m				200			Drive mode; multiplexed	None ♦	PY1622b
65	FM40X1FB-B	VFD	40	8.8 *	65	5.0	1.0 #		06		200		30k	Dot Matrix;5x7	None	PY1642
66	FIP20B9AR	VFD	20	9.0 *		7.2 *	130m				200			Alphanumeric	None	PY1609a
67	FIP20X1DB	VFD	20	9.0 *		6.4 *	120m		16	100u*	300			Drive mode; multiplexed	None ♦	PY1634f
68	FIP20X1MA	VFD	20	9.0 *		6.4 *	120m		16	100u*	250			Drive mode; multiplexed	None ♦	PY1634h
69	FM20X1DB-AC	VFD	20	9.0 *	65	5.0	800m#		06		300		30k	Dot Matrix;5x7	None	PY1639
70	FIP16X1FA	VFD	16	9.1 *		4.8 *	120m				200			Dot Type; multiplexed	None ♦	PY1634c
71	FIP18X2AA	VFD	32	9.1 *		8.0	208m				200			Dot Matrix	EC9432ZZ	PY1634l
72	FIP9C10	VFD	9	9.5 *		3.8 *	58m				220			Num;Colon	None	PY1621b
73	FIP11B10A	VFD	11	9.5 *		5.5 *	55m				200			Num;Colon	None	PY1620d
74	FIP13A10	VFD	13	9.5 *		5.5 *	55m				170			Seg,7	None	PY1608c
75	FIP13C10C	VFD	13	9.5 *		5.5 *	55m				250			For Multi-Plex Drive	None	PY1626
76	FIP13D10A	VFD	13	9.5 *		5.5 *	55m				250			For Multiplex Drive	None	PY1620g
77	FIP13D10B	VFD	13	9.5 *		5.5 *	55m				250			For Multiplex Drive	None	PY1620g
78	LD8214	VFD	13	9.5 *		5.5 *	55m				170			Seg,7	None	PY1608c
79	FIP11F10	VFD	11	9.6 *		4.8 *	78m				200			Seg,7	EC2810ZZ	PY1625a
80	LD8217	VFD	8	11 *		3.5 *	78m				160			FI Indicator Panel;Dyn	EC198a	PY1186
81	FIP16C11X	VFD	16	11 *		8.3 *	133m				500			Dot Matrix,5X7	EC5616ZZ	PY1171
82	FIP16D11X	VFD	16	11 *		8.3 *	133		15		500			Dot Matrix,5X7	EC5616ZZ	PY1172
83	FIP16XM1BA	VFD	16	11 *		8.3 *	106m		16	100u*	300			Drive mode; multiplexed	None ♦	PY949
84	FIP16XM1CA	VFD	16	11 *		8.3 *	133m				500			Dot Matrix,5X7	EC5616ZZ	PY1171
85	FIP16XM1DA	VFD	16	11 *		8.3 *	133		15		500			Dot Matrix,5X7	EC5616ZZ	PY1172
86	FIP10XM2AA	VFD	20	11 *		5.0 *	260m				350			Drive mode; multiplexed	None ♦	PY1634e
87	FIP6A13	VFD	6	13 *		3.2 *	120m				200			Num	EC206a	PY723
88	FIP13B13	VFD	13	13 *		5.2 *	120m				350			Num	EC3313a	PY722
89	FIP48AW14YS	VFD	48	14 *		3.7 *	136m				400			Static; Bar Graph	None ♦	PY1627
90	FIP2A15S	VFD	2	15 *		1.5 *	75m				220			Seg,7	None	PY1609e
91	FIP4A15A	VFD	4	15 *		3.0 *	75m				200			7-Seg	None	PY1611b
92	FIP4B15S	VFD	4	15 *		3.0 *	75m				220			7-Segment,Static	EC334a	PY484
93	FIP4C15	VFD	4	15 *		3.0 *	75m				180			Num;Colon	None	PY484
94	FIP5D15AS	VFD	5	15 *		3.0 *	75m				220			7-Segment,Static	EC334b	PY485
95	FIP5D15S	VFD	5	15 *		3.0 *	75m				220			7-Segment,Static	EC334b	PY485
96	FIP5K15S	VFD	5	15 *		3.0 *	75m				220			Drive mode; multiplexed	None ♦	PY485
97	FIP6C15A	VFD	6	15 *		3.7 *	150m				700			7-Seg, Num	EC236ZZ	PY1050
98	FIP6D15A	VFD	6	15 *		3.3 *	100m				300			7-Segment	EC285a	PY1137
99	FIP6D15B	VFD	6	15 *		3.3 *	100m				300			7-Segment	EC285a	PY1137
100	FIP11A15	VFD	11	15 *		6.3 *	125m				180			Seg,7	EC4211a	PY1160
101	FIP24AW16YS	VFD	24	16 *		3.2 *	100m				180			Static; Bar Graph	None ♦	PY952
102	FIP10A20	VFD	10	20 *		6.0 *	180m				250			Num;Colon	EC2510a	PY732
103	FIP128GX20AA	VFD		30 *		9.2	234m				200			128x20,Graphic	EC14620Z	PY1046
104	FIP180GX48BA	VFD		30 *		5.3	312m				200			180x48,Graphic	None	PY1635a
105	FIP240A4XT	VFD		39 *		8.9	450m				200			280x60,Graphic	None	PY1636
106	FIP280GX60AA	VFD		39 *		8.9	450m				200			280x60,Graphic	None	PY1636

SYMBOLS AND CODES EXPLAINED IN INTERPRETER

IN ORDER OF: (1) TYPE CODE & (2) TYPE NUMBER

LINE No.	2 TYPE NUMBER	1 TYPE CODE	PARAMETERS ELECTRICAL MAX PWR DISS. (W)	VOLT (V)	CURR. (A)	OPTICAL Pk W/L λp (m)	INTENS. Iv (cd)	TEMP RNG. CODE - +	DESCRIPTION	SCHE-MATIC	DRAWING
FIBER OPTIC RECEIVER											
4	DIR170	2				1.2u		07	Fiber Coupled PIN Detector to 40Mbs(NRZ)	None	None
5	FDR13E	2		12 †	45mØ			05	40 MBPS-NRZ Fiber Optic Receiver	FB13	None
6	FOD100	2		90		920n	620m▼	57	NEP(.90nm,10MHz,1.0Hz).29 pW/Hz 1/2;tr 1.0ns	FB56	PS142 Ø
7	FOR100B	2		12 ♦		820n			DC to 5 Mbits 4.5v to 12v CMOS/TTL	None	PS361
8	FOR261F1	2		5.0 †		820n			DC to 10 Mbits 5v TTL output Fan out 10	None	PS362
9	FOR261F2	2		5.0 †		820n			DC to 10 Mbits 5v TTL output Fan out 10	None	PS362
10	FOR361B1	2		5.0 †		820n			DC to 10 Mbits 5v TTL output Fan out 10	None	PS364
11	FOR361B2	2		5.0 †		820n			DC to 10 Mbits 5v TTL output Fan out 10	None	PS364
12	HFBR1201	2	40m	7.0 †	250m†	820n		28	Fiber Optic Logic Link;Tpd 11.5ns max	None	PS290
13	HFBR2001	2		6.0 ♦	100mØ$	770n		07	Fiber Optic Receiver Module	FB75	PS194
14	HFBR2201	2	40m	7.0	25m†	820n		28	Fiber Optic Logic Link;Tpd 75ns Max	None	None
15	HFD3000-002(A)	2	20u♦*	5.5 Ø†	20mØ†			6F%	5Mbit;Sensitivity less than 2uw peak	BE86	PD22h Ø
16	HFD3000-102(A)	2	20u♦*	5.5 Ø†	20mØ†			6F%	5Mbit;Sensitivity 2uw peak;Hermetically Tested	BE86	PD22h Ø
17	R1000-160	2		15 †		950n		X	Hybrid Optical Receiver to 100MHz	FB170	PS356
18	R5100S	2			6.0 †				Optical Recv;Vs 200-250V;BW DC-2MHz	FB171	None
19	R5105	2						26	Turnkey;Pwr Sup:+/-15V;Data Rate:NRZ 4/RZ2 Mbps	None	None
20	R5500S	2			6.0 †				Optical Recv;Vs 200-250V;BW DC-10MHz	FB171	None
21	R5800S	2			6.0 †				Optical Recv;Vs 200-250V;BW DC-30MHz	FB171	None
22	R5805	2						26	Turnkey;Pwr Sup:+/-15V;Data Rate:NRZ25/RZ15 Mbp	None	None
23	R5900S	2			6.0 †				Optical Recv;Vs 200-250V;BW DC-150MHz	FB171	None
24	R5908	2						26	Turnkey;Pwr Sup-5.2V,15V D/Rate NRZ150/RZ80Mbps	None	None
25	R5908C2	2			100m†				Fiber Optic Receiver;Pwr Supply +/-15V;ECL	None	None
26	TD201(2A)	2	6u	12	22m			36	Output Rise/Fall 50n;Min Pulse width 60n	None	PS275
FIBER OPTIC TRANSMITTER											
30	375CQY/B	3		2.5		850n$	3.0mΔ	06	Double Heterostructure Semi Conductor Laser	None	PD1089
31	375CQY/B-A	3		2.5		840n$	3.0 Δ	06	Double Heterostructure Semiconductor Laser	None	PD1089
32	375CQY/B-B	3		2.5		860n$	3.0 Δ	06	Double Heterostructure Semiconductor Laser	None	PD1089
33	375CQY/B-C	3		2.5		880n$	3.0 Δ	06	Double Heterostructure Semiconductor Laser	None	PD1089
34	497CQF/A(A)	3		2.0		810n$	2.0mΔ		Double Heterostructure Laser Diode w/Pigtail	None	PD1089
35	497CQF/A-A(A)	3		2.0		840n$	2.0mΔ		Double Heterostructure Laser Diode w/Pigtail	None	PD1089
36	497CQF/A-B(A)	3		2.0		860n$	2.0mΔ		Double Heterostructure Laser Diode w/Pigtail	None	PD1089
37	497CQF/A-C(A)	3		2.0		880n$	2.0mΔ		Double Heterostructure Laser Diode w/Pigtail	None	PD1089
38	498CQL(A)	3		2.0		840n	5.0mΔ		Double Heterostructure AlGaAs Laser	None	PD1090
39	C86037E	3		-5	300m	1.3u		35	Injection laser w/fiber Optic Output Cable	None	PS322
40	C86041E	3		-45	200m	820n		35	Injection laser w/fiber Optic Output Cable	None	PS323
41	C86042E	3		-5	300m	1.3u		35	Injection laser w/fiber Optic Output Cable	None	PS323
42	FDT13E	3		5.0 †	115mØ			05	High Power Digital Transmitter	FB13	None
43	FIP307	3		55	10m	904n	3.0 Δ		Laser;Pulsed tr 6ns;Rep Rate 10kHz	FB24a	PS82 Ø
44	FIP325	3		90	10m	904n	10 Δ		Laser;Pulsed tr 14ns;Rep Rate 5.0kHz	FB24a	PS82 Ø
45	FIP574	3		150	1.0m	904n	150 Δ		Laser;Pulsed tr 30ns;Rep Rate 30-200Hz	FB24a	PS82a Ø
46	FOE380B2	3	30u*	5.0 †	100mØ	820n			DC to 20 Mbits NRZ w/Driver and Light Source	None	PS363
47	FOE380B	3	65u*	5.0 †	100mØ	820n			DC to 20 Mbits NRZ w/Driver and Light Source	None	PS363
48	FOT180B	3	65u*	5.0 †	100mØ	820n			DC to 20 Mbits NRZ w/Driver and Light Source	None	PS361
49	HFBR1001	3	625m	5.0 $	125m§	700n		07	dc to 10Mb/s NRZ;TTL Input to Opt Pulses:100M	FB74	PS194
50	HFBR1002	3	892m	6.0 ♦	170m	820n		07	Long Dist Tx/1000 Metres;Hi-Speed/DC to 10Mbaud	FB99	PS194
51	HFE4010X12(A)	3	60u†*	5.0 †	65m†	850n		58Ø	10Mbit;GaAlAs LED;FC 200um,NA0.4,Vi5V;SWEET POT	None	TO-46 Ø
52	HFE4010X13(A)	3	120u†*	5.0 †	65m†	850n		58Ø	10Mbit;GaAlAs LED;FC 200um,NA0.4,Vi5V;SWEET POT	None	TO-46 Ø
53	HFE4010X14(A)	3	220u†*	5.0 †	65m†	850n		58Ø	10Mbit;GaAlAs LED;FC 200um,NA0.4,Vi5V;SWEET POT	None	TO-46 Ø
54	ML25	3	500m	2.0 *	250mØ	830n			IR LED;BW DC to 200MHz;Radiated Pwr 1.0mW	None	TO-5
55	ML25P	3	400m	2.0 *	250mØ	830n			IR LED;BW DC to 200MHz;Radiated Pwr 150uW	FB67	TO-5
56	ML25P-SF3	3	400m	2.0 *	250mØ	830n			IR LED;BW DC to 200MHz;Radiated Pwr 50uW	FB67	TO-5
57	ML25P-TS	3	500m	2.0 *	353m*	830n			IR LED For Systems MDL151,MDL154 And MDL358	None	None
58	ML25PS	3	400m	2.0 *	250mØ	830n			IR LED;BW DC to 70MHz;Radiated Pwr 500uW	FB67	TO-5
59	ML33	3	400m	1.7 *	500mØ	905n			IR LED;BW 30MHz;Radiated Pwr 2.0mW	None	TO-5
60	ML37	3	400m	1.7 *	1000mØ	810n			IR LED;BW 35MHz;Radiated Pwr 18mW	None	TO-5
61	MLT458	3	200m♦	5.0	100m		2.5mΔ		Digital Xmission Rate DC to 60 Mbps	FB44	None
62	MLT478	3	200m♦	5.0	100m		12mΔ		Digital Xmission Rate dc to 60Mbps	FB44	None
63	MLT488	3	300m♦			830n			Digital Xmission Rate DC to 25 Mbps	FB140	TO-5
64	PIX105(A)	3		5					Laser Transmitter; Adjustable Power Output	None	None
65	PIX109(A)	3		9					Laser Transmitter; Adjustable Power Output	None	None
66	PIX115(A)	3		15					Laser Transmitter; Adjustable Power Output	None	None
FIBER OPTIC SUPPORT											
70	5501(3)	4		15 †	53m	820n		07	Data Input Module;ADC;Digital,4-5MHz out	FB158	PS341
71	5502(3)	4		15 †	53m†			07	Data Output Module;DAC;+/-1V Analog out	FB157	PS339
72	AOF1050	4				890n			Fused Silica Fiber for Use W/XA/RA,XD/RD-1000	None	None
73	AOF1052	4				890n			Large Core Silica Fiber Use W/XA/RA,XD/RD-1000	None	None
74	AOF1300	4				660n			Single Plastic Fiber for Use W/XA/RA,XD/RD-1000	None	None
75	C86003E-RS	4	250m†	10 $	50m§	840n	500n%		Dig Data Link;PIN Det;20Mbs NRZ;TTL Out	FB49 ♦	PS148
76	C86003E-TS	4	1.2 †	5.0	250m	840n	100uØΔ		Dig Data Link;IR LED;20Mbs NRZ;TTL In	FB49 ♦	PS148
77	C86012E-RS	4	150m†	5.0	30m			35	Dig Data Link;PIN Det;20Mbs NRZ;TTL Out	FB49 ♦	PS221
78	C86012E-TS	4	1.2 †	5.0	250m			35	Dig Data Link;IR LED;20Mbs NRZ;TTL In	FB49 ♦	PS221
79	FAR4HS	4		125 †					Analog Trans Reciever;Bandwidth-25MHz	None	PS211
80	FAT4HS	4		125 †					Analog Trans Reciever;Bandwidth-25MHz	None	PS211
81	GFOD1A1	4	150m	30 %	100m%	940n	70uØ▼	58	Vis Vceo;Iis Ic;Iceo 100nA; Veco 5V	None	PT115
82	HFBR0010	4	1.2	5.0 §	225m§			07	10m Simplex Sys;Incl HFBR-1001 Xmit,2001 Rec	None	None
83	HFBR3099	4							Adapter-use w/HFBR Cable Assem.	None	PS215
84	IC1000-1	4				700n	1.0k#		Cable;NA 250 in sq;FDia.250mm;LN30cm	None	None
85	IC1000-2	4				700n	1.0k#		Cable;NA 250 in sq;FDia.250mm;LN61cm	None	None
86	IC1000-3	4				700n	1.0k#		Cable;NA 250 in sq;FDia.250mm;LN91cm	None	None
87	IC1000-4	4				700n	1.0k#		Cable;NA 250 in sq;FDia.250mm;LN122cm	None	None
88	IC1000-5	4				700n	1.0k#		Cable;NA 250 in sq;FDia.250mm;LN153cm	None	None
89	IC2000	4				700n	1.0k*		Ribbon;Dim 250mm/25,Length 30m	None	None
90	LG1000	4						2A	Light Guides;FDia .068mm;NA.66typ AL	None	None
91	LG1050	4						2A	Light Guides;FDia .068mm;NA.66typ AL	None	None
92	LG1100	4						2A	Light Guides;FDia .068mm;NA.66typ AL	None	None
93	LG1150	4						2A	Light Guides;FDia .068mm;NA.66typ AL	None	None
94	MDL258	4	3.8	%	%				Anal Sys;500kHz-100MHz;12V,185mA;-6.0V,100mA	None	None
95	MDL259	4	3.8	%	%				Anal Sys;500kHz-200MHz;MDL258 Pwr;250V,10uA	None	None
96	MDL271-4	4		12 †					Optical Analog/Digital R/T pr;BW DC to 2MHz	None	None
97	MDL275-4	4		12 †					Optical Analog/Digital R/T pr;BW DC to 10MHz	None	None
98	MDL275TV	4		12 †					R/T pr for Video;Bandwidth 6 Hz to 6 MHz	None	None
99	MDL276TV	4		12 †					R/T pr for Video;Bandwidth 6 Hz to 15 MHz	None	None
100	MDL277TV	4		12 †					R/T pr for Video;Bandwidth 6 Hz to 30 MHz	None	None
101	MDL278-4	4		12 †					Optical Analog/Digital R/T pr;BW DC to 25 MHz	None	None
102	MDL278TV	4		12 †					R/T pr for Video;Bandwidth 6 Hz to 40 MHz	None	None
103	MDL285TV	4		12 †					R/T Term pr for Composite Video;BW 6Hz to 8MHz	FB209	PS355
104	MDL286TV	4		12 †					R/T Term pr for Composite Video;BW 6Hz to 20MHz	FB209	PS355
105	MDL288TV	4		12 †					R/T Term pr for Composite Video;BW 6Hz to 35MHz	FB209	PS355
106	MDL481	4		12 †					R/T Term pr;NRZ to 4/RZ to 2 Mbps	FB196	PS355
107	MDL485	4		12 †					R/T Term pr;NRZ to 4/RZ to 2 Mbps	FB196	PS355
108	MDL488	4		12 †					R/T Term pr;NRZ to 4/RZ to 2 Mbps	FB196	PS355
109	MDL621-50	4	17m	15 †	250m†				Optical Data Link;TV;Bandwidth 5-5MHZ	None	None
110	MDL621-100	4	17m	15 †	250m†				Optical Data Link;TV;Bandwidth 5-5MHZ	None	None

SYMBOLS AND CODES EXPLAINED IN INTERPRETER

IN ORDER OF: (1) TYPE CODE & (2) TYPE NUMBER

LINE No.	TYPE NUMBER	TYPE CODE	PARAMETERS ELECTRICAL MAX PWR DISS. (W)	VOLT (V)	CURR. (A)	OPTICAL Pk W/L λp (m)	INTENS. Iv (cd)	TEMP RNG. CODE - +	DESCRIPTION	SCHE-MATIC	DRAWING
1	MDL622-50	4	17m	15 †	250m†				Optical Data Link;TV;Bandwidth 5-5MHZ	None	None
2	MDL622-150	4	17m	15 †	250m†				Optical Data Link;TV;Bandwidth 5-5MHZ	None	None
3	MDL622-300	4	17m	15 †	250m†				Optical Data Link;TV;Bandwidth 5-5MHZ	None	None
4	MDL623-200	4	17m	15 †	250m†				Optical Data Link;TV;Bandwidth 5-5MHZ	None	None
5	MDL623-500	4	17m	15 †	250m†				Optical Data Link;TV;Bandwidth 5-5MHZ	None	None
6	MDL821-50	4	17m†	15 †	250 †				Optical Data Link;Digital;Data Rate dc to 5Mbps	None	None
7	MDL821-100	4	17m†	15 †	250 †				Optical Data Link;Digital;Data Rate dc to 5Mbps	None	None
8	MDL823-200	4	17m†	15 †	250 †				Optical Data Link;Digital;Data Rate dc to 5Mbps	None	None
9	MDL2755TV	4		117 †				07	Fiber Optic Data Link for Composite Video	None	None
10	MDL2765TV	4		117 †				07	Fiber Optic Data Link for Composite Video	None	None
11	MDL2775TV	4		117 †				07	Fiber Optic Data Link for Composite Video	None	None
12	MDL2785TV	4		117 †				07	Fiber Optic Data Link for Composite Video	None	None
13	MDL4595	4		12 †	250m†	820n			Optical Xmitter and Receiver;DC to 150Mbs	None	None
14	MDL4866	4							R/T Term Pr;NRZ 20/RZ 12 Mbps	FB101	PS355
15	MDL4877	4							R/T Term Pr;NRZ 30/RZ 20 Mbps	FB101	PS355
16	MDL4995	4		12 †	250m†	820n			Optical Xmitter and Receiver;DC to 150Mbs	None	None
17	MDL27502	4		12 †	6m†				High Impedance, High Speed, Analog Data Xmitter	None	None
18	MDL27802	4		12 †	10m†				High Impedance, High Speed, Analog Data Xmitter	None	None
19	MFOD2404	4		7.5 Ø†	6.0mØ†	820n		6C	Integrated Detector Preamplifier	FB164	PS152a
20	MFOD2405	4			6.0mØ†	820n		6C	Integrated Detector Preamplifier	FB164	PS152a
21	OC1000	4				800n	15 #		Low L05s Cbl;Fbs 7;Ln 1000m;NA .22,25	None	None Ø
22	OC1100	4				750n	100 #		Low L05s Cbl;Fbs 7;Ln 1000m;NA .48,57	None	None Ø
23	OC1200	4				700n	65m#		Bundle Cbl;Fdia .068mm;NA 0.66 Typ;Fbs 210	None	None Ø
24	OC1250	4					40m#		Bundle Cbl;Fdia .068mm;NA 0.66 Typ;Fbs 210	None	None Ø
25	OC1300	4				750n			Plastic Cbl;NA .58,Fdia .250mm;FBs 32	None	None
26	OC1310	4				750n			Plastic Cbl;NA .58,Fdia .250mm;FBs 43	None	None
27	OC1315	4				750n			Plastic Cbl;NA .58,Fdia .508mm;FBs 19	None	None
28	OC1400	4							Wide band Cbl;AIn;Fdia .76mm;NA 0.23	None	PS200
29	OC1500	4							IR Cbl;NA .35 at 2.3 wm;ALN;	None	PS200
30	OF1100	4				950n	20 #		BW 20MH 2/km;NA .16 typ;Core Dia .09mm	None	None
31	OF1150	4				950n	20 #		BW 400MH 2/km;NA .16 typ;Core Dia .09mm	None	None
32	OF1300-005	4				690n	1.0k#		Core Dia .115mm;FDIA .127mm;NA .58 typ	None	None
33	OF1300-010	4				690n	1.0k#		Core Dia .228mm;FDIA .255mm;NA .58 typ	None	None
34	OF1300-020	4				690n	1.0k#		Core Dia .457mm;FDIA .508mm;NA .58 typ	None	None
35	OF1300-030	4				690n	1.0k#		Core Dia .685mm;FDIA .762mm;NA .58 typ	None	None
36	OF1300-040	4				690n	1.0k#		Core Dia .914mm;FDIA .020mm;NA .58 typ	None	None
37	OF1300-050	4				690n	1.0k#		Core Dia .140mm;FDIA .270mm;NA .58 typ	None	None
38	OPB950	4		%	%			48	VR 80 V; IF cont 75mA AbS; Data Link	None	PS277
39	P140	4				600n	400 #		NA .53 Typ;Fbs 1;Core Dia. 4mm	None	None
40	P240	4				600n	400 #		NA .53 Typ;Fbs 2;Core Dia. 4mm	None	None
41	PIR140	4				790n	340 #		NA .53TYP;Fbs 1;Core Dia .4mm	None	None
42	QSF200	4				950n	10 #		BW25MH2/km;LN10km;NA.22typ.ALN	None	None
43	QSF300	4				950n	10 #		BW20MH2/km;LN6.0km;NA.22typ.ALN	None	None
44	QSF400	4				950n			BW15MH2/km;LN5.0km;NA.22typ.ALN	None	None
45	QSF600	4				950n			BW9.0MH2/km;LN3.0km;NA.22typ.ALN	None	None
46	QSF1000	4				950n			BW5.0MH2/km;LN0.3km;NA.22typ.ALN	None	None
47	XA/RA1000	4		18	250m	890n		05	Analog Sys to 1.0km;DC-3.5MHz;Vi 1.0-10Vrms	None	None
48	XD/RD1000	4		15	200m	890n		05	Dig Sys to 1.0km;1.0Mb/s max;TTL,MOS;Rz,NRZ	None	None

IMAGE SENSOR ARRAY/QUADRANT DETECTOR

52	100Q-PIN-RM	10				0.9u	0.5 ▼		Quad Diff Jctn Si Photo Diode;Deplet v 75	None	None
53	C30843	10	100m	500m*		1.1u	12 $	48	Quadrant N Silicon Pin Photodiode	FB52	PS29 Ø
54	C30844	10	200m	500m*		1.1u	3.0 $	48	Quadrant N Silicon Pin Photodiode	FB52	PS189
55	C30845	10	200m	500m*		1.1u	1.2 $	48	Quadrant N Silicon Pin Photodiode	FB52	PS189
56	C30846	10		100 ♦	10m♦	1.1u		48	Quadrant N Silicon Pin Photodiode	FB52	PS149
57	MN8027	5	9.0	140m	.30			25	Linear Image Sensor C1KFrg 500kHz	None	PY754
58	NXA1010	5		20 ♦		600n		26	Frame Transfer CCD 604x576 TV Image Sensor	FB212	PS469
59	NXA1011(A)	5	150m	22 ♦%	10m♦△	600n$		26	Frame Xfer; 604x576; VPsub 5V; Blue Sensitivity	FB212	PS469
60	NXA1020	5		20 ♦		600n		26	Frame Transfer CCD 604x576 Color TV ImageSensor	FB212	PS469
61	NXA1021(A)	5	150m	22 ♦%	10m♦△			26	Frame Xfer; 604x576; Cyan,Yellow,Grn; VPsub 5V	FB212	PS469
62	NXA1031(A)	5	150m	22 ♦%	10m♦△	600n$		26	Frame Xfer; 610x490; VPsub 5V; Blue Sensitivity	FB212	PS469
63	NXA1041(A)	5	150m	22 ♦%	10m♦△			26	Frame Xfer; 610x490; Cyan,Yellow,Grn; VPsub 5V	FB212	PS469
64	OPA256C1	5	80m	16		18u		26	One dimensional light receiving diode array	FB148	PS313
65	OPA2048CA	5	100m	18		1.0u		28	One dimensional light receiving diode array	FB149	PS314
66	PINSPOT4D	10		10	50u				2 Axis;350-1100nm;Resp .4A/W;NEP 90f;RS 70M	None	PS95a Ø
67	PINSPOT9D	10		10	1.0mΔ	920n	641m$	5C	2 Axis;350-1100nm;Resp .5A/W;NEP 860fW/Hz 1/2	None	PS138 Ø
68	PS200-2	10	10		1.1u$				Spec Reg 400n-1170nm;Re 45A/W at 905 nm;tc4.0uS	None ♦	PS139a
69	PS200-4	10	10		1.1u$				Spec Reg 400n-1170nm;Re 45A/W at 905nm;tc 5.0uS	None ♦	PS139b
70	QD7-0	10		30	10n	900n			4 Quadrant Silicon;NEP.10pW typ at W/L 900nm	None ♦	PD203a Ø
71	QD7-1	10		10		430n			4 Quadrant Silicon;NEP.10pW typ at W/L 900nm	None ♦	PD203a Ø
72	QD7-2	10		60		900n			4 Quadrant Silicon;NEP.10pW typ at W/L 900nm	None ♦	PD203a Ø
73	QD7-3	10		100		900n			4 Quadrant Silicon;NEP.10pW typ at W/L 900nm	None ♦	PD203a Ø
74	QD7-4	10		180		1.0u			4 Quadrant Silicon;NEP.10pW typ at W/L 900nm	None ♦	PD203a Ø
75	QD7-5T	10		12 §		850n	450m▼	57	Quadrant;Blue Enhanced	None	None
76	QD50-0	10		30	100n	900n			4 Quadrant Silicon;NEP.33pW typ at W/L 900nm	None ♦	PD200a Ø
77	QD50-1	10		10		430n			4 Quadrant Silicon;NEP.33pW typ at W/L 900nm	None ♦	PD200a Ø
78	QD50-2	10		60		900n			4 Quadrant Silicon;NEP.33pW typ at W/L 900nm	None ♦	PD200a Ø
79	QD50-3	10		100		900n			4 Quadrant Silicon;NEP.33pW typ at W/L 900nm	None ♦	PD200a Ø
80	QD50-4	10		180		1.0u			4 Quadrant Silicon;NEP.33pW typ at W/L 900nm	None ♦	PD200a Ø
81	QD50-5T	10		12 %	5.0n%			57	V is operating;I is dark;Pn 87f w/Hz(1/2)	None	TO-8
82	QD100-0	10		30	300n	900n			4 Quadrant Silicon;NEP.50pW typ at W/L 900nm	None ♦	PD201 Ø
83	QD100-1	10		10		430n			4 Quadrant Silicon;NEP.50pW typ at W/L 900nm	None ♦	PD201 Ø
84	QD100-2	10		60		900n			4 Quadrant Silicon;NEP.50pW typ at W/L 900nm	None ♦	PD201 Ø
85	QD100-3	10		100		900n			4 Quadrant Silicon;NEP.50pW typ at W/L 900nm	None ♦	PD201 Ø
86	QD100-4	10		180		1.0u			4 Quadrant Silicon;NEP.50pW typ at W/L 900nm	None ♦	PD201 Ø
87	QD100-5T	10		12 §		850n	450m▼	57	Quadrant;Blue Enhanced	None	None
88	QD320-0	10		30		900n			4 Quadrant Silicon;NEP1.0pW typ at W/L 900nm	None ♦	PD202a Ø
89	QD320-1	10		10		430n			4 Quadrant Silicon;NEP1.0pW typ at W/L 900nm	None ♦	PD202a Ø
90	QD320-2	10		60		900n			4 Quadrant Silicon;NEP1.0pW typ at W/L 900nm	None ♦	PD202a Ø
91	QD320-3	10		100		900n			4 Quadrant Silicon;NEP1.0pW typ at W/L 900nm	None ♦	PD202a Ø
92	QD320-4	10		180		1.0u			4 Quadrant Silicon;NEP1.0pW typ at W/L 900nm	None ♦	PD202a Ø
93	QD320-5T	10		12 §		850n	450m▼	57	Quadrant;Blue Enhanced	None	None
94	RA32X32A	5	10m†	-13 Ø†		750n	320n*	58%	32x32 Ele;Clock:12V,ph 4,5.0MHz;Qsat 1.6pc	FB7	PS354
95	RA50X50A	5	10m†	-13 Ø†		750n	320n*	58%	50x50 Ele;Clock:12V,ph 4,5.0MHz;Qsat 1.6pc	FB7	PS354
96	RA100X100	5							100X100 element;2.36mil spacing	None	None
97	RA128X128A	5	120m	16 Ø†	10mØ	750n		X	128x128Element;2.13mil Spacing	None	FB166
98	RA256X256	5		15					IMAGE ARRAY;256x256res;ESAT .25uj/cm2	None	None
99	RA256X256A	5	120m	16 Ø†	10mØ	750n		X	256x256Element;2.36mil Spacing	None	FB167
100	RL32WD	5		-20 ♦		750n		78	Wide-Aperture Arrays	FB169	None
101	S1200	5		20		900n		16	Position Sensitive Detector	FB161	PS349
102	S1300	5		20		900n		16	Position Sensitive Detector	FB162	PS349a
103	S1352	5		20		900n		16	Position Sensitive Detector	FB160	PS345
104	S1543	5		20		900n		16	Position Sensitive Detector	FB160	TO-5
105	S1544	5		20		900n		16	Position Sensitive Detector	FB160	PS346
106	S1545	5		20		900n		16	Position Sensitive Detector	FB160	PS347
107	S1662	5		20		900n		16	Position Sensitive Detector	FB160	PS347
108	S1743	5		20		900n		16	Position Sensitive Detector	FB161	TO-8
109	S1771	5		20		900n		16	Position Sensitive Detector	FB160	PS348
110	SD11875P(A)	10		12		840n		2	Quad Det;TO5base;45A/W;Id 25nA/Quad	None	TO-5 Ø

IN ORDER OF: (1) TYPE CODE & (2) TYPE NUMBER

LINE No.	TYPE NUMBER [2]	TYPE CODE [1]	PARAMETERS ELECTRICAL MAX PWR DISS. (W)	VOLT (V)	CURR. (A)	OPTICAL Pk W/L λp (m)	INTENS. Iv (cd)	TEMP RNG. CODE - +	DESCRIPTION	SCHE-MATIC	DRAWING
1	SD12149P(A)	10		15		820n		2	Quad Det;TO5 base;Ct8pf;Tr 10nS;0.3A/W	None	TO-5
2	SID52501AD	5		20 ♦		700n		16	CCD 512x320 TV Sensor;Low Perf;3250uA/Lm Typ	FB32	PS31 △
3	SID52501BD	5		20 ♦		700n		16	CCD 512x320 TV Sensor;Hi Perf;3250uA/Lm Typ	FB32	PS31 △
4	TC102	5	100m†	20 Ø†	9.4mØ†			27	128x1 CCD Linear Image Sensor,P-P Noise 1mV typ	FB173	PS360
5	TC103	5	110m†	15 Ø†	12mØ†			27	2048x1 CCD Linear Image Sensor,P-P Noise 1mV	FB174	PS121d
6	TC104	5	112m†	15 Ø†	12mØ†			27	3456x1 CCD Linear Image Sensor,P-P Noise 0.6mV	FB175	PS121e
7	UPD791D	5	230m	12				25	4096-Bit CCD Image Sensor	FB151	PS319
8	UPD792D	5	200m	15 △			.40 *	25	9umX14um MOS Senors	FB86	PS222
9	UPD795D	5	200m†	12				25	1024-Bit CCD Image Sensor	FB152	PS320
10	UPD799D	5	70m	12				25	2048-Bit CCD Image Sensor	FB153	PS321
LIGHT PEN											
14	TXCK1200	6		3.6	180mØ	820n	20m△		Colimator PEN,Beam Dia 4.5mm,Spect Half BW 5nm	None	PD1391
15	TXCK1203	6		3.6	400m	820n	20m△		Colimator PEN,Beam Dia 4.5mm,Spect Half BW 5nm	None	PD1391
16	TXCK1500	6		3.6	180m	850n			Colimator PEN w/ Opt SMA Connector,Spect BW 5nm	None	PD1391
17	TXFK1500	6		3.6	180m	850n			Colimator PEN w/ Opt SMA Connector,Spect BW 5nm	None	PD1392
21	120-1	6		5.0	125m				Sensitivity 7FL min.Response Time 500ns	None	None
OPTOELECTRONIC CONTROLLER											
25	304(2)	7		50	80u			5F	Imp.Converter;Vgs(off)1.0V,Zo 5kohm	FB48	None
26	C32305	7		5.0	185mØ	910n		05	Photoelectric Skanner Amplifier	FB181	PS326
27	C32306	7		5.0	185mØ	910n		05	Photoelectric Skanner Amplifier	FB181	PS326
28	C32307	7		5.0	185mØ	910n		05	Photoelectric Skanner Amplifier	FB181	PS326
29	C32308	7		5.0	185mØ	910n		05	Photoelectric Skanner Amplifier	FB181	PS326
30	D24001	7							Analog Driver for CW Laser or LED Loads	None	None
31	D24002	7							Analog Driver for CW Laser or LED Loads	None	None
32	FX41	7		200 ♦					Pk I pulse 80A Laser Load,PRF 1.0kHz,Trig2.0V	FB42	None
33	FX45	7		90 ♦					Pk I pulse 20A Laser Load,PRF 10kHz,Trig2.0V	FB42	None
34	FX47	7		90 ♦					Pk I pulse 15A Laser Load,PRF 15kHz,Trig2.0V	FB42	None
35	MA41(2)	7		15 ♦	6.0m			28	Trans Z 90kohm,BW1.0MHz,Noise 120uV max	FB43	PS141 Ø
36	MCP3009	7	330m	250 △	60m▼			4A	OPTICALLY ISOLATED TRIAC DRIVER	FB178	PH122
37	MCP3010	7	330m	250 △	60m▼			4A	OPTICALLY ISOLATED TRIAC DRIVER	CD3	PH122
38	MCP3011	7	330m	250 △	60m▼			4A	OPTICALLY ISOLATED TRIAC DRIVER	CD3	PH122
39	MCP3020	7	330m	400 △	60m▼			4A	OPTICALLY ISOLATED TRIAC DRIVER	CD3	PH122
40	MCP3021	7	330m	400 △	60m▼			4A	OPTICALLY ISOLATED TRIAC DRIVER	CD3	PH122
41	MCP3022	7	330m	400 △	60m▼			4A	OPTICALLY ISOLATED TRIAC DRIVER	CD3	PH122
42	MG7712(2)	7	90m	15 ♦	6.0m♦			28	Trans Z 1.0kohm;Noise 150uV;BW 150MHz	FB43	PS141 Ø
43	MU110(2)	7	1.0	16	17.5m			07	Electro-Optical Sensor System	FB179	DL16 Ø
44	OTR120SDN	7	75m	5.0	15m			07	Switch;Photodiode Det;Schmitt Trig/Neg True Out	None	PS238
45	OTR120SDP	7	75m	5.0	15m			07	Switch;Photodiode Det;Schmitt Trig/Pos True Out	None	PS238
46	OTR121SDN	7	75m	5.0	15m			07	Switch;Phototrans Det;Schmitt Trig/Neg True Out	None	PS238
47	OTR121SDP	7	75m	5.0	15m			07	Switch;Phototrans Det;Schmitt Trig/Pos True Out	None	PS238
48	PN11596	7		30 $				07	IR Det Preamp;Vi 800V max;Gain 10 At 1.0MHz min	None ♦	PS176 Ø
49	R1500(2)	7		-40 %	2.5 Ø	905n		27	PIN Pho.dio, %-OperVott ; Resp 10mV/uV	FB112	TO-5
50	R1800(2)	7		-40 %	2.5 Ø	905n		27	PIN Pho.dio, %-OperVott ; Resp 3mV/uV	FB112	TO-5
51	R1900	7		-40 %	2.5 Ø	905n		27	PIN Pho.dio, %-OperVott ; Resp 1mV/uV	FB112	TO-5
52	R42007	7		%				05	PIn 115VAC,50-500Hz,2VA;Out Options;Relay Out	FB93	PS224
53	R42008	7		%				05	115 VAC,50-500 Hz,2VA;Relay Out Option	FB93	PS224
54	T21104(2)	7		6.0	20mØ			06	Photoelectric Amplifier Module	FB180	PS369
55	TIEF150	7	35m	8.0 ♦	6.0m♦			5C	Trans Z;BW 100 MHz;Zin 70ohm;Zout 5ohm	FB55	PS152
56	TIEF151	7	35m	8.0 ♦	6.0m♦			5C	Trans Z;BW 50 MHz;Zin 140ohm;Zout 10ohm	FB55	PS152
57	TIEF152	7	40m	8.0 ♦	7.0m♦			5C	Trans Z;BW 20 MHz;Zin 500ohm;Zout 12ohm	FB55	PS152
OPTICAL ROTARY ENCODER											
61	HEDS5000	8		7.0 ♦	5.0m△			5A	Hi Res incremental optical encoder kit;28mmdia	FB211	PS467
62	HEDS5010	8		7.0 ♦	5.0m△			5A	Hi Res incremental optical encoder kit;28mmdia	FB211	PS467
63	HEDS6000	8		7.0 ♦	5.0m△			5A	Hi Res incremental optical encoder kit;56mmdia	FB211	PS468
64	HEDS6010	8		7.0 ♦	5.0m△			5A	Hi Res incremental optical encoder kit;56mmdia	FB211	PS468
65	KRE02	8		6.0 *	150m	940n		07	Rotary Encoder;3 outp;sine/quasi;f20kHz	None ♦	PS409 Ø
66	RE2100	8		5.0 †		940n		05	Rotary Encoder;2 outp;100P/R;f10kHz	None	PS410 Ø
67	RE4500	8		5.0 †		940n		06	Rotary Encoder;2 outp;100-500P/R;f50kHz	None ♦	PS411 Ø
PACKAGED LAMP											
71	249-7867-3331-504	9		3.6	18m			57	Transient Free Switching;Frensel Lens;Red LED	None ♦	PD560a
72	249-7867-3335-504	9		3.6	18m			57	Transient Free Switching; Fresnel Lens; Red LED	None ♦	PD560a
73	249-7867-3337-504	9		3.6	18m			57	Transient Free Switching; Frensel Lens; Red LED	None ♦	PD560a
74	249-7868-3331-504	9		5.0	18m			57	Transient Free Switching;Frensel Lens;Red LED	None ♦	PD560a
75	249-7868-3335-504	9		5.0	18m			57	Transient Free Switching;Fresnel Lens;Red LED	None ♦	PD560a
76	249-7868-3337-504	9		5.0	18m			57	Transient Free Switching;Frensel Lens;Red LED	None ♦	PD560a
77	249-7869-3331-504	9		6.0	18m			57	Transient Free Switching;Frensel Lens;Red LED	None ♦	PD560a
78	249-7869-3335-504	9		6.0	18m			57	Transient Free Switching;Fresnel Lens;Red LED	None ♦	PD560a
79	249-7869-3337-504	9		6.0	18m			57	Transient Free Switching;Frensel Lens;Red LED	None ♦	PD560a
80	249-7870-3331-504	9		10	18m			57	Transient Free Switching;Frensel Lens;Red LED	None ♦	PD560a
81	249-7870-3335-504	9		10	18m			57	Transient Free Switching;Fresnel Lens;Red LED	None ♦	PD560a
82	249-7870-3337-504	9		10	18m			57	Transient Free Switching;Frensel Lens;Red LED	None ♦	PD560a
83	249-7871-3331-504	9		14	18m			57	Transient Free Switching;Frensel Lens;Red LED	None ♦	PD560a
84	249-7871-3337-504	9		14	18m			57	Transient Free Switching;Frensel Lens;Red LED	None ♦	PD560a
85	249-7872-3331-504	9		28	18m			57	Transient Free Switching;Frensel Lens;Red LED	None ♦	PD560a
86	249-7872-3335-504	9		28	18m			57	Transient Free Switching;Frensel Lens;Red LED	None ♦	PD560a
87	249-7872-3337-504	9		28	18m			57	Transient Free Switching;Frensel Lens;Red LED	None ♦	PD560a
88	249-7967-3332-504	9		3.6	18m			57	Transient Free Switching;Frensel Lens;Grn LED	None ♦	PD560a
89	249-7967-3335-504	9		3.6	18m			57	Transient Free Switching; Frensel Lens; Grn LED	None ♦	PD560a
90	249-7967-3337-504	9		3.6	18m			57	Transient Free Switching; Frensel Lens; Grn LED	None ♦	PD560a

SYMBOLS AND CODES EXPLAINED IN INTERPRETER

IN ORDER OF: (1) TYPE CODE & (2) TYPE NUMBER

LINE No.	2 TYPE NUMBER	1 TYPE CODE	PARAMETERS ELECTRICAL MAX PWR DISS. (W)	VOLT (V)	CURR. (A)	OPTICAL Pk W/L λp (m)	INTENS. Iv (cd)	TEMP RNG. CODE - +	DESCRIPTION	SCHE-MATIC	DRAWING
1	249-7968-3332-504	9		5.0	18m			57	Transient Free Switching;Frensel Lens;Grn LED	None ♦	PD560a
2	249-7968-3335-504										
3	249-7968-3337-504	9		5.0	18m			57	Transient Free Switching;Frensel Lens;Grn LED	None ♦	PD560a
		9		5.0	18m			57	Transient Free Switching;Frensel Lens;Grn LED	None ♦	PD560a
4	249-7969-3332-504	9		6.0	18m			57	Transient Free Switching;Frensel Lens;Grn LED	None ♦	PD560a
5	249-7969-3335-504										
6	249-7969-3337-504	9		6.0	18m			57	Transient Free Switching; Frensel Lens; Grn LED	None ♦	PD560a
		9		6.0	18m			57	Transient Free Switching;Frensel Lens;Grn LED	None ♦	PD560a
7	249-7970-3332-504	9		10	18m			57	Transient Free Switching;Frensel Lens;Grn LED	None ♦	PD560a
8	249-7970-3335-504										
9	249-7970-3337-504	9		10	18m			57	Transient Free Switching;Frensel Lens;Grn LED	None ♦	PD560a
		9		10	18m			57	Transient Free Switching;Frensel Lens;Grn LED	None ♦	PD560a
10	249-7971-3332-504	9		14	18m			57	Transient Free Switching;Frensel Lens;Grn LED	None ♦	PD560a
11	249-7971-3335-504										
12	249-7971-3337-504	9		14	18m			57	Transient Free Switching;Frensel Lens;Grn LED	None ♦	PD560a
		9		14	18m			57	Transient Free Switching;Frensel Lens;Grn LED	None ♦	PD560a
13	249-7972-3332-504	9		28	18m			57	Transient Free Switching;Frensel Lens;Grn LED	None ♦	PD560a
14	249-7972-3335-504										
15	249-7972-3337-504	9		28	18m			57	Transient Free Switching;Frensel Lens;Grn LED	None ♦	PD560a
		9		28	18m			57	Transient Free Switching;Frensel Lens;Grn LED	None ♦	PD560a
16	249-8067-3333-504	9		3.6	18m			57	Transient Free Switching;Frensel Lens;Yel LED	None ♦	PD560a
17	249-8067-3335-504										
18	249-8067-3337-504	9		3.6	18m			57	Transient Free Switching; Frensel Lens: Yel LED	None ♦	PD560a
		9		3.6	18m			57	Transient Free Switching;Frensel Lens;Yel LED	None ♦	PD560a
19	249-8068-3333-504	9		5.0	18m			57	Transient Free Switching;Frensel Lens;Yel LED	None ♦	PD560a
20	249-8068-3335-504										
21	249-8068-3337-504	9		5.0	18m			57	Transient Free Switching;Frensel Lens;Yel LED	None ♦	PD560a
		9		5.0	18m			57	Transient Free Switching;Frensel Lens;Yel LED	None ♦	PD560a
22	249-8069-3333-504	9		6.0	18m			57	Transient Free Switching;Frensel Lens;Yel LED	None ♦	PD560a
23	249-8069-3335-504										
24	249-8069-3337-504	9		6.0	18m			57	Transient Free Switching;Frensel Lens;Yel LED	None ♦	PD560a
		9		6.0	18m			57	Transient Free Switching;Frensel Lens;Yel LED	None ♦	PD560a
25	249-8070-3333-504	9		10	18m			57	Transient Free Switching;Frensel Lens;Yel LED	None ♦	PD560a
26	249-8070-3335-504										
27	249-8070-3337-504	9		10	18m			57	Transient Free Switching;Frensel Lens;Yel LED	None ♦	PD560a
		9		10	18m			57	Transient Free Switching;Frensel Lens;Yel LED	None ♦	PD560a
28	249-8071-3333-504	9		14	18m			57	Transient Free Switching;Frensel Lens;Yel LED	None ♦	PD560a
29	249-8071-3335-504										
30	249-8072-3333-504	9		14	18m			57	Transient Free Switching;Frensel Lens;Yel LED	None ♦	PD560a
		9		28	18m			57	Transient Free Switching;Frensel Lens;Yel LED	None ♦	PD560a
31	249-8072-3335-504	9		28	18m			57	Transient Free Switching;Frensel Lens;Yel LED	None ♦	PD560a
32	507-4756-3331-500										
33	507-4756-3335-500	9		3.6	18m			57	Transient Free Switching;Frensel Lens;Red LED	None ♦	PD339b Ø
		9		3.6	18m			57	Transiet Free Switching; Fresnel-Lens; Red LED	None ♦	PD399b
34	507-4756-3337-500	9		3.6	18m			57	Transiet Free Switching; Fresnel-Lens; Red LED	None ♦	PD399b
35	507-4757-3331-500										
36	507-4757-3335-500	9		5.0	18m			57	Transient Free Switching;Frensel Lens;Red LED	None ♦	PD399b Ø
		9		5.0	18m			57	Transient Free Switching;Fresnel-Lens;Red LED	None ♦	PD399b
37	507-4757-3337-500	9		5.0	18m			57	Transient Free Switching;Fresnel-Lens;Red LED	None ♦	PD399b
38	507-4758-3331-500										
39	507-4758-3335-500	9		6.0	18m			57	Transient Free Switching;Frensel Lens;Red LED	None ♦	PD399b Ø
		9		6.0	18m			57	Transient Free Switching;Fresnel-Lens;Red LED	None ♦	PD399b
40	507-4758-3337-500	9		6.0	18m			57	Transient Free Switching;Fresnel-Lens;Red LED	None ♦	PD399b
41	507-4759-3331-500										
42	507-4759-3335-500	9		10	18m			57	Transient Free Switching;Frensel Lens;Red LED	None ♦	PD399b Ø
		9		10	18m			57	Transient Free Switching;Fresnel-Lens;Red LED	None ♦	PD399b
43	507-4759-3337-500	9		10	18m			57	Transient Free Switching;Fresnel-Lens;Red LED	None ♦	PD399b
44	507-4760-3331-500										
45	507-4760-3335-500	9		14	18m			57	Transient Free Switching;Frensel Lens;Red LED	None ♦	PD399b Ø
		9		14	18m			57	Transient Free Switching;Fresnel-Lens;Red LED	None ♦	PD399b
46	507-4760-3337-500	9		14	18m			57	Transient Free Switching; Fresnel Lens; Red LED	None ♦	PD399b
47	507-4761-3331-500										
48	507-4761-3335-500	9		28	18m			57	Transient Free Switching;Frensel Lens;Red LED	None ♦	PD399b Ø
		9		28	18m			57	Transient Free Switching;Fresnel-Lens;Red LED	None ♦	PD399b
49	507-4856-3332-500	9		3.6	18m			57	Transient Free Switching;Frensel Lens;Grn LED	None ♦	PD339b Ø
50	507-4856-3335-500										
51	507-4856-3337-500	9		3.6	18m			57	Transient Free Switching; Fresnel Lens; Grn LED	None ♦	PD399b
		9		3.6	18m			57	Transient Free Switching; Fresnel Lens: Grn LED	None ♦	PD399b
52	507-4857-3332-500	9		5.0	18m			57	Transient Free Switching;Frensel Lens;Grn LED	None ♦	PD399b Ø
53	507-4857-3335-500										
54	507-4857-3337-500	9		5.0	18m			57	Transient Free Switching;Fresnel Lens;Grn LED	None ♦	PD399b
		9		5.0	18m			57	Transient Free Switching;Fresnel Lens;Grn LED	None ♦	PD399b
55	507-4858-3332-500	9		6.0	18m			57	Transient Free Switching;Frensel Lens;Grn LED	None ♦	PD399b Ø

SYMBOLS AND CODES EXPLAINED IN INTERPRETER

46. MISCELLANEOUS DEVICES - Packaged Lamp (Cont'd)

IN ORDER OF: (1) TYPE CODE & (2) TYPE NUMBER

LINE No.	2 TYPE NUMBER	1 TYPE CODE	PARAMETERS ELECTRICAL MAX PWR DISS. (W)	VOLT (V)	CURR. (A)	OPTICAL Pk W/L λp (m)	INTENS. Iv (cd)	TEMP RNG. CODE - +	DESCRIPTION	SCHE-MATIC	DRAWING
1	507-4858-3335-500	9		6.0	18m			57	Transient Free Switching;Fresnel Lens;Grn LED	None ♦	PD399b
2	507-4858-3337-500	9		6.0	18m			57	Transient Free Switching; Fresnel Lens; Grn LED	None ♦	PD399b
3	507-4859-3332-500	9		10	18m			57	Transient Free Switching;Frensel Lens;Grn LED	None ♦	PD399b Ø
4	507-4859-3335-500	9		10	18m			57	Transient Free Switching;Fresnel Lens;Grn LED	None ♦	PD399b
5	507-4859-3337-500	9		10	18m			57	Transient Free Switching;Fresnel Lens;Grn LED	None ♦	PD399b
6	507-4860-3332-500	9		14	18m			57	Transient Free Switching;Frensel Lens;Grn LED	None ♦	PD399b Ø
7	507-4860-3335-500	9		14	18m			57	Transient Free Switching;Fresnel Lens;Grn LED	None ♦	PD399b
8	507-4860-3337-500	9		14	18m			57	Transient Free Switching;Fresnel Lens;Grn LED	None ♦	PD399b
9	507-4861-3332-500	9		28	18m			57	Transient Free Switching;Frensel Lens;Grn LED	None ♦	PD399b Ø
10	507-4861-3335-500	9		28	18m			57	Transient Free Switching;Fresnel Lens;Grn LED	None ♦	PD399b
11	507-4861-3337-500	9		28	18m			57	Transient Free Switching;Fresnel Lens;Grn LED	None ♦	PD399b
12	507-4956-3333-500	9		3.6	18m			57	Transient Free Switching;Frensel Lens;Yel LED	None ♦	PD339b Ø
13	507-4956-3335-500	9		3.6	18m			57	Transient Free Switching; Fresnel Lens; Yel LED	None ♦	PD399b
14	507-4956-3337-500	9		3.6	18m			57	Transient Free Switching; Fresnel Lens; Yel LED	None ♦	PD399b
15	507-4957-3333-500	9		5.0	18m			57	Transient Free Switching;Frensel Lens;Yel LED	None ♦	PD399b Ø
16	507-4957-3335-500	9		5.0	18m			57	Transient Free Switching;Fresnel Lens;Yel LED	None ♦	PD399b
17	507-4957-3337-500	9		5.0	18m			57	Transient Free Switching;Fresnel Lens;Yel LED	None ♦	PD399b
18	507-4958-3333-500	9		6.0	18m			57	Transient Free Switching;Frensel Lens;Yel LED	None ♦	PD399b Ø
19	507-4958-3335-500	9		6.0	18m			57	Transient Free Switching;Fresnel Lens;Yel LED	None ♦	PD399b
20	507-4958-3337-500	9		6.0	18m			57	Transient Free Switching;Fresnel Lens;Yel LED	None ♦	PD399b
21	507-4959-3333-500	9		10	18m			57	Transient Free Switching;Frensel Lens;Yel LED	None ♦	PD399b Ø
22	507-4959-3335-500	9		10	18m			57	Transient Free Switching;Fresnel Lens;Yel LED	None ♦	PD399b
23	507-4959-3337-500	9		10	18m			57	Transient Free Switching;Fresnel Lens;Yel LED	None ♦	PD399b
24	507-4960-3333-500	9		14	18m			57	Transient Free Switching;Frensel Lens;Yel LED	None ♦	PD399b Ø
25	507-4960-3335-500	9		14	18m			57	Transient Free Switching;Fresnel Lens;Yel LED	None ♦	PD399b
26	507-4960-3337-500	9		14	18m			57	Transient Free Switching;Fresnel Lens;Yel LED	None ♦	PD399b
27	507-4961-3333-500	9		28	18m			57	Transient Free Switching;Frensel Lens;Yel LED	None ♦	PD399b Ø
28	507-4961-3335-500	9		28	18m			57	Transient Free Switching;Fresnel Lens;Yel LED	None ♦	PD399b
29	507-4961-3337-500	9		28	18m			57	Transient Free Switching;Fresnel Lens;Yel LED	None ♦	PD399b
30	6039-004-304G	9		2.3 %	50m▼		3.2m		%: DC Forw'd Volts at 20mA; Green	None	PS426
31	6039-004-304R	9		1.7 %	50m▼		2.0m		%: DC Forw'd Volts at 20mA; Red	None	PS426
32	6039-004-304Y	9		2.3 %	50m▼		3.2m		%: DC Forw'd Volts at 20mA; Yellow	None	PS426
33	6039-005-304G	9		2.3 %	50m▼		3.2m		%: DC Forw'd Volts at 20mA; Green	None	PS426
34	6039-005-304R	9		1.7 %	50m▼		2.0m		%: DC Forw'd Volts at 20mA; Red	None	PS426
35	6039-005-304Y	9		2.3 %	50m▼		3.2m		%: DC Forw'd Volts at 20mA; Yellow	None	PS426
36	6080-002-304	9		2.0 %	40m▼		16m		%:DC Forwd Volts at 20mA;HiEff Red	None	PS425
37	6080-004-304	9		2.0 %	40m▼		5.0m		%:DC Forwd Volts at 20mA;HiEff Yellow	None	PS425
38	6080-005-304	9		2.0 %	40m▼		6.0m		%:DC Forwd Volts at 20mA;HiEff Green	None	PS425
39	6081-900-304	9		2.0 %	16m▼		1.3m		%: DC Forw'd Volts at 20mA; Red	None	PS425
40	6082-004-304	9		5.0 %	40m▼		5.0m		%:DC Forwd Volts at 20mA;HiEff Yellow	None	PS425
41	6082-005-304	9		5.0 %	40m▼		6.0m		%:DC Forwd Volts at 20mA;HiEff Green	None	PS425
42	6084-002-304	9		14 %	35m▼		14m		%:DC Forwd Volts at 20mA;HiEff Red	None	PS425
43	6084-004-304	9		14 %	35m▼		4.0m		%:DC Forwd Volts at 20mA;HiEff Yellow	None	PS425
44	6084-005-304	9		14 %	35m▼		5.0m		%:DC Forwd Volts at 20mA;HiEff Green	None	PS425
45	6086-002-304	9		28 %	20m▼		8.0m		%:DC Forwd Volts at 20mA;HiEff Red	None	PS425
46	6086-004-304	9		28 %	20m▼		2.5m		%:DC Forwd Volts at 20mA; HiEffYellow	None	PS425
47	6086-005-304	9		28 %	20m▼		3.0m		%:DC Forwd Volts at 20mA;HiEff Green	None	PS425
48	6330-001-505A	9		2.0 %	40m▼		10m		%: DC Forwd Volts at 20mA; Amber	None	PS424
49	6330-002-505R	9		2.0 %	40m▼		13m		%: DC Forwd Volts at 20mA;Red	None	PS424
50	6330-301-505A	9		2.0 %	40m▼		10m		%:DC Forwd Volts at 20mA;Amber	None	PS424
51	6330-302-505R	9		2.0 %	40m▼		13m		%:DC Forwd Volts at 20mA;Red	None	PS424
52	6332-001-505A	9		5.0 %	40m▼		10m		%: DC Forwd Volts at 20mA; Amber	None	PS424
53	6332-002-505R	9		5.0 %	40m		13m		%: DC Forwd Volts at 20mA; Red	None	PS424
54	6332-301-505A	9		5.0 %	40m		10m		%: DC Forwd Volts at 20mA;Amber	None	PS424
55	6332-302-505R	9		5.0 %	40m▼		13m		%:DC Forwd Volts at 20mA;Red	None	PS424
56	6334-001-505A	9		14 %	35m▼		9.0m		%: DC Forw'd Volts at 20mA; Amber	None	PS424
57	6334-002-505R	9		14 %	35m▼		11m		%: DC Forwd Volts at 20mA; Red	None	PS424
58	6334-301-505A	9		14 %	35m▼		9.0m		%: DC Forwd Volts at 20mA;Amber	None	PS424
59	6334-302-505R	9		14 %	35m▼		11m		%:DC Forwd Volts at 20mA;Red	None	PS424
60	6336-001-505A	9		28 %	20m▼		5.0m		%: DC Forw'd Volts at 20mA; Amber	None	PS424
61	6336-002-505R	9		28 %	20m▼		7.0m		%: DC Forwd Volts at 20mA; Red	None	PS424
62	6336-301-505A	9		28 %	20m▼		5.0m		%: DC Forwd Volts at 20mA;Amber	None	PS424
63	6336-302-505R	9		28 %	20m▼		7.0m		%:DC Forwd Volts at 20mA;Red	None	PS424
64	6340-001-505A	9		2.0 %	40m▼		10m		%:DC Forwd Volts at 20mA;Amber	None	PS424a
65	6340-002-505R	9		2.0 %	40m▼		13m		%:DC Forwd Volts at 20mA; Red	None	PS424a
66	6340-301-505A	9		2.0 %	40m▼		10m		%:DC Forwd Volts at 20mA; Amber	None	PS424a
67	6340-302-505R	9		2.0 %	40m▼		13m		%:DC Forwd Volts at 20mA; Red	None	PS424a
68	6342-001-505A	9		5.0 %	40m▼		10m		%:DC Forwd Volts at 20mA;Amber	None	PS424a
69	6342-002-505R	9		5.0 %	40m▼		13m		%:DC Forwd Volts at 20mA;Red	None	PS424a
70	6342-301-505A	9		5.0 %	40m▼		10m		%:DC Forwd Volts at 20mA; Amber	None	PS424a
71	6342-302-505R	9		5.0 %	40m▼		13m		%:DC Forwd Volts at 20mA; Red	None	PS424a
72	6344-001-505A	9		14 %	35m▼		9.0m		%:DC Forwd Volts at 20mA;Amber	None	PS424a
73	6344-002-505R	9		14 %	35m▼		11m		%:DC Forwd Volts at 20mA;Red	None	PS424a
74	6344-301-505A	9		14 %	35m▼		9.0m		%:DC Forwd Volts at 20mA; Amber	None	PS424a
75	6344-302-505R	9		14 %	35m▼		11m		%:DC Forwd Volts at 20mA; Red	None	PS424a
76	6346-001-505A	9		28 %	20m▼		5.0m		%:DC Forwd Volts at 20mA;Amber	None	PS424a
77	6346-002-505R	9		28 %	20m▼		7.0m		%:DC Forwd Volts at 20mA;Red	None	PS424a
78	6346-301-505A	9		28 %	20m▼		5.0m		%:DC Forwd Volts at 20mA; Amber	None	PS424a
79	6346-302-505R	9		28 %	20m▼		7.0m		%:DC Forwd Volts at 20mA; Red	None	PS424a
80	CMD9531	9		48 ▼	12m▼		2.4m		Telephone Slide Indicator; Red	None	PS421
81	CMD9532	9		48 ▼	12m▼		2.4m		Telephone Slide Indicator; Red	None	PS422

SYMBOLS AND CODES EXPLAINED IN INTERPRETER

46. MISCELLANEOUS DEVICES - Packaged Lamp (Cont'd)

IN ORDER OF: (1) TYPE CODE & (2) TYPE NUMBER

LINE No.	TYPE NUMBER [2]	TYPE CODE [1]	PARAMETERS ELECTRICAL MAX PWR DISS. (W)	VOLT (V)	CURR. (A)	OPTICAL Pk W/L λp (m)	INTENS. Iv (cd)	TEMP RNG. CODE - +	DESCRIPTION	SCHE-MATIC	DRAWING
1	CMD9741	9		24 ▼	20m▼		6.0m		Telephone Slide Indicator; Yellow	None	PS421
2	CQL13A	9		5.0	175mØ	820n	2.0mΔ	06	Collimator Pen w/Laser and Photodiode	None ♦	PS389a
3	CQL16	9		5.0	100m♦	780n	2.0mΔ	06	Collimator Pen w/Laser and Photodiode	None ♦	PS389a
4	CQL17B	9		5.0	120m	845n	2.0mΔ	06	Collimator Pen w/Laser and Photodiode	None	PS389
5	L31011	9		5.0	115m	910n		05	incd source for throughbeam detector	FB184	PS387
6	L31014	9		1.7	40m	910n		05	LED 940 nm source for throughbeam	FB185	PS387
7	L32001	9		5.0	115m			05	incd light for throughbeam detector	FB184	PS388
8	L32004	9		1.7	40m	940n		05	LED 940nm for throughbeam detector	FB185	PS388
ADDITIONAL OPTOELECTRONIC DEVICES											
12	CS2012	11		20 ♦	2.6m†		500u$		Detector/Interface System	FA75	PS470
13	PINLSC4	11		10		900n			1 Axis;Resp .25A/W;Ree 200kohm	None	PS94 Δ
14	PINSC10	11		10		900n			2 Axis;Sens .4A/W/Cm;Resp .35A/W;RS 5kohm	None	PS93 Ø
15	PINSC25	11		10		900n			2 Axis;Sens .24A/W/Cm;Resp .35A/W;RS 5kohm	None	PS93a Ø
16	PINSC50	11		10		900n			2 Axis;Sens .14A/W/Cm;Resp .35A/W;RS 5kohm	None	PS93b Ø
17	PINSPOT2D	11		10	50u				1 Axis;350-1100nm;Resp .4A/W;NEP 90f;RS 60M	None	PS95 Ø
18	R6550P01-200	11		15 Ø†	20 Ø†			07	LARGE Area Detector, Amp with post Amp	None ♦	PS265
19	TD100(1)	11		12 Ø†	6.0 Ø†				Low Noise pre Amp,post Amp,Threshold CKt	None	PS275
20	TD200(1)	11		12 Ø†	30 †				Low Noise pre Amp,post Amp,Threshold CKt	None ♦	PS275

If this is June 1988 or later, it is time to order your next issue of OPTOELECTRONICS.

Optoelectronic components qualified under MIL-S-19500 have a government type number designation as indicated below.

SEMICONDUCTORS MIL-S-19500 GOV'T. TYPE NO. DESIGNATION

JAN	6N	136	A
Prefix (as applicable)	Component Designation	Identification Number	Suffix Letter(s)

PREFIX:
The JAN, JANTX, JANTXV, JANTXVM, JANTXVD, JANTXVH, JANS, JANSM, JANSD, JANSR, AND JANSH prefix is assigned based upon the qualification testing performed. A summary chart is provided below.

JAN Prefix Product Assurance Requirements

Requirement	JANS	JANSH JANSD JANSR JANSH	TXV	TXVM TXVD TXVR TXVH	TX	JAN
			(X = Required)			
Qualification:						
a. Product assurance program and survey	X	X	X	X	X	X
b. Manufacturer certification	X	X				
c. Inspection and testing	X	X	X	X	X	X
Inspection lot	X	X	X	X	X	X
Traceability	X	X				
Inspection during manufacture Screening	X	X	X	X	X	
Quality conformance inspection:						
a. Group A (each lot)	X	X	X	X	X	X
b. Group B (each lot)	X	X	X	X	X	X
c. Group C (every 6 months)	X	X	X	X	X	X
d. Group D (each lot)		X		X		

Devices without a JAN prefix have not been processed in accordance with MIL-S-19500 as shown above, but are electrically equivalent to the corresponding JAN prefixed device.

Continued Next Page

SEMICONDUCTORS MIL-S-19500 GOV'T. TYPE NO. DESIGNATION

Four radiation hardening levels are provided for JANS and JANTXV devices qualified as shown. (See RHA level chart).

Radiation Hardness Assurance (RHA) Level

RHA Level Designation	Total Ionizing Dose (RAD (Si))	Neutron Fluence (n/cm^2)
M	3000	2×10^{12}
D	10^4	2×10^{12}
R	10^5	10^{12}
H	10^6	10^{12}

COMPONENT DESIGNATION:

Semiconductor components are identified by the prefix "XN." An "X" will usually be a number which is one less than the number of active element terminations.

IDENTIFICATION NUMBER:

Each type of semiconductor component intended for standardization will be assigned an identification serially by the Joint Electron Device Engineering Council (J.E.D.E.C.). This assignment provides the component designation, identification number, and any applicable suffix letters.

SUFFIX LETTERS:

The suffixes shown may be used as part of the type number as applicable.

A, B, C, etc (except L, M, R, S) ..... Indicates a modified version which is substitutable for the basic numbered (non-suffix) device.

M ..... Indicates matching of specified parameters of separate devices.

R ..... Indicates reverse polarity packaging of the basic numbered device.

L or S ..... Indicates that the terminal leads are longer or shorter, respectively, than those of the basic numbered device.

DRAWING SECTION

48. SCHEMATIC DRAWINGS

D.A.T.A. LEAD CODE IDENTIFICATION GUIDE

LEAD CODE EXPANDER

- ⊠ – Terminal 1 connected to Case
- § – Terminal 2 connected to Case
- ϕ – Terminal 3 connected to Case
- $ – Terminal 4 connected to Case
- ♦ – See Outline for terminal designation

LEAD CODE	LEAD CONFIGURATION 1	2	3	4
A	A	K		
B	K	A		
C		K	A	
D	K2	K1	A1/A2	
E	K	NC	A	
F	A	NC	K	
G	K	R	A	
H	A	K	R	
J		A	K	
K	K	A	NC	
M	A	A	K	
N	A1	A2	K1/K2	
S	A		K	CASE
T	K	A	R	
U	(–)	NC	( )	
V	A		K	
W	A	R	K	
X	A	CASE	K	
Y	K		A	
Z	A	K	CASE	
AA	C	E		
AB	E	C		
AC	E	C	B	
AD	E	B	C	
AE	B	E	C	
AF	B	C	E	
AG	C	E	B	
AH	C	B	E	
AJ	E		C	
AK	E	C		
AM	C		E	
AN	NC	K	A	
AQ	A	K	A	
AR	K	K	Common A	
AS	A1	K	K	
AT	A	K	E	C

LEAD CODE	LEAD CONFIGURATION 1	2	3	4
DA	C1/C2	E2		
DB	E2	C1/C2		
DC	B1	E2	C1/C2	
DD	B1	C1/C2	E2	
DE	C1/C2	B1	E2	
DF	C1/C2	E2	B1	
DG	E2	B1	C1/C2	
DH	E2	C1/C2	B1	
EJ	B1	C1/C2	E1/B2	E2
EK	B1	C1/C2	E2	E1/B2
EM	C	G	A	
EN	E2/B3	E3	C1/C2/C3	
EQ	C	B	E1	E2
ER	C1	C2	E2	
ES	C1/C2		E2	
GA	S	D		
GB	D	S		
GC	D	G	S	
GD	D	S	G	
GE	G	D	S	
GF	G	S	D	
GG	S	D	G	
GH	S	G	D	
GJ	S	D	G	CASE
KA	A	K		
KB	K	A		
KC	A	K	G	
KD	A	G	K	
KE	K	GP	A	GN
KF	G	A	K	
KG	K	G	A	
KH	K	GP	A	GN
KJ	K	GP	GN	A
KK	D	S	CASE	

ABBREV.	TERM
A,A1,A2	Anode
B,B1,B2	Base
C,C1,C2	Collector
D	Drain
E,E1,E2	Emitter
G	Gate
GN	N-Gate (Anode Gate)
GP	P-Gate (Cathode Gate)
K,K1,K2	Cathode

ABBREV.	TERM
NC	No Connection
R	Guard Ring
S	Source
(+)	Positive Source Terminal
(–)	Negative Source Terminal

NOTE: For multi-element devices, numerical subscripts designate corresponding element terminals.

DRAWING/LEAD CODE DESIGNATIONS

DEVICE CLASS	SECTION	DEVICE TYPE	LEAD CODE GROUPING	DRAWING PREFIX LETTERS Schematic	Outline
Emitters	2	Light Emitting Diode	A to Z		PD
	3	Infrared Emitting Diode	A to Z		PD
	4	Arrays: LED and Infrared Emitting Diode		ED	PA
Sensors	10	Photodiode	A to Z		PD
	11	Phototransistor	AA to CZ		PT
	12	Photodarlington	DA to FZ		PT
	13	Photothyristor	KA to NZ		PT
	14	Photocircuit (IC)		BE	PH
	15	Arrays: Photodiode, Phototransistor		BF	PA
	16	Photoconductive Cell			PC
	17	Photovoltaic Cell	A to Z		PV
	18	Photovoltaic Array		BJ	PV
Photocouplers	25	Photocell (LDR, Voltaic) Output		CA	PH
	26	Phototransistor Output		CB	PH
	27	Photodarlington Output		CC	PH
	28	Photothyristor Output		CD	PH
	29	Photocircuit (IC) Output		CE	PH
Displays	35	LED		E	PY
	36	Liquid Crystal		EB	PY
	37	Other: Gas Discharge, Incandescent		EC	PY
Special Devices	45	Detectors		FA	PS
	46	Miscellaneous Devices		FB	PS

48. SCHEMATIC DRAWINGS

NOTES

These schematic drawings are intended as a guide for the user. They should not be used for constructive purposes without first checking with the appropriate manufacturer.

These drawings are referenced in the Technical Sections of this D.A.T.A.BOOK in accordance with information supplied by the manufacturers.

All drawings have circular symmetry unless otherwise indicated.

BE1 Light Detector W/Preamp

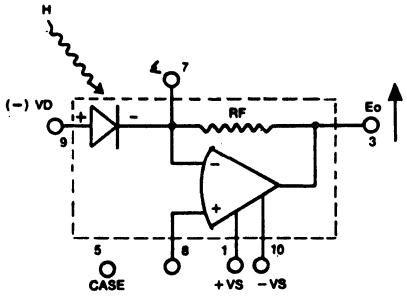

BE2 Light Detector W/Preamp

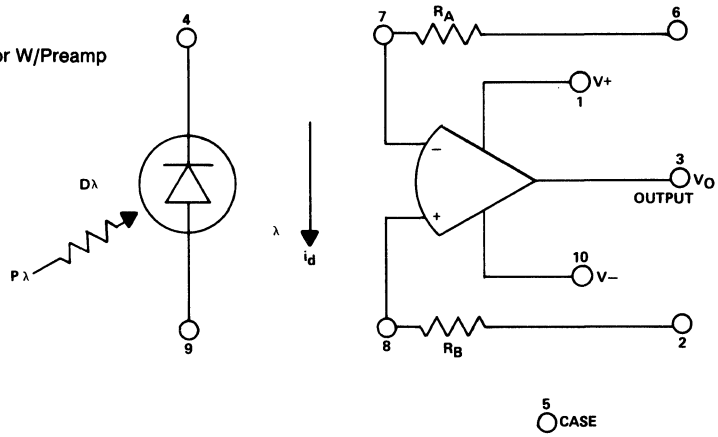

BE99 Liquid Level Sensor

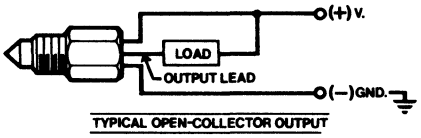

BE6 Avalanche Photodetector Module

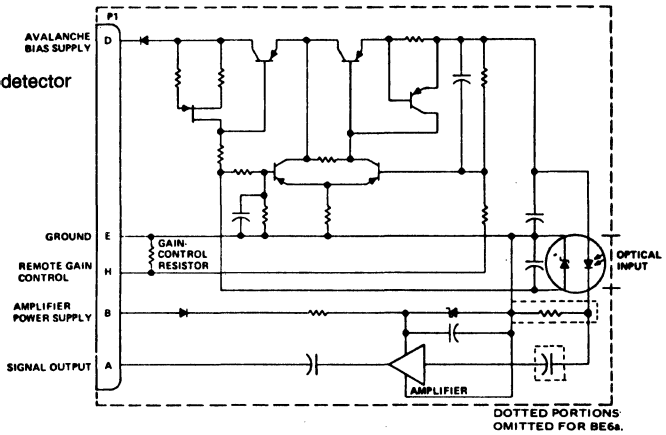

BE7 Photodiode W/Preamp

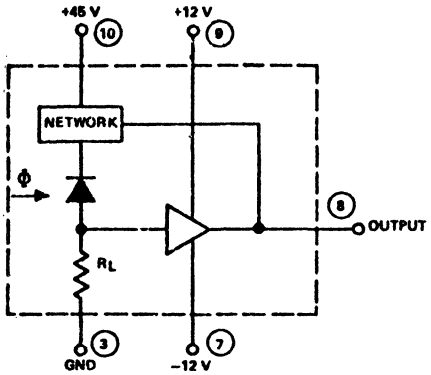

BE100 Liquid Level Sensor

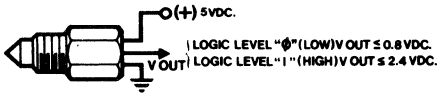

BE101 Liquid Level Sensor

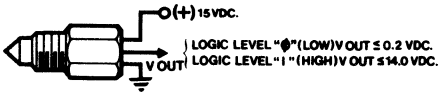

BE102 Optoschmitt

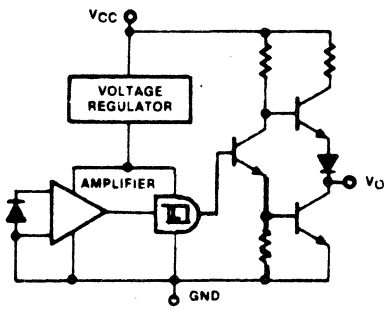

48. SCHEMATIC DRAWINGS

BE15 Opto Reader for Punched Tape Application

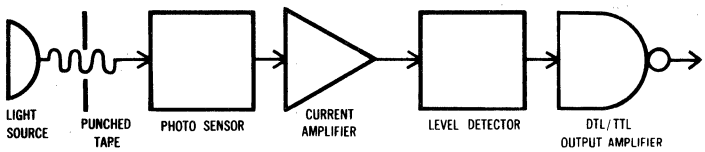

BE16 Photodiode W/Preamp

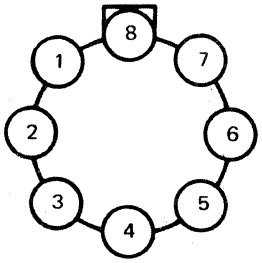

	OFF NULL	INV IN	NON INV IN	PHOTO DIODE	OFF NULL	OUT PUT	V+	V-
BE16	1	2	3	4	5	6	7	8
BE16a	1	2	3	8	5	6	7	4

BE28 Photodiode W/Op Amp

PIN CONNECTIONS
1. V+1 (+12V) COMPARATOR
2. GND
3. COMPARATOR OUTPUT
4. V+3 (+5V)
5. V−(−12V), COMPARATOR
6. AMPLIFIER OUTPUT
7. B−(12V), AMPLIFIER
8. B+(12V), AMPLIFIER

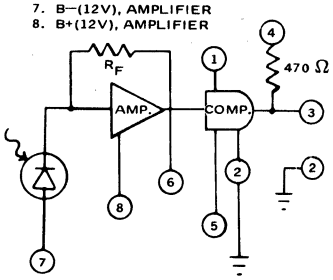

BE18 Photodiode W/Preamp

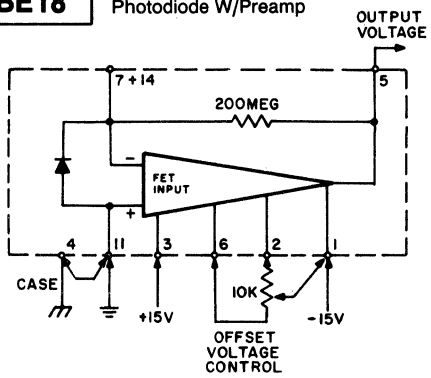

BE22 Photodiode W/Preamp

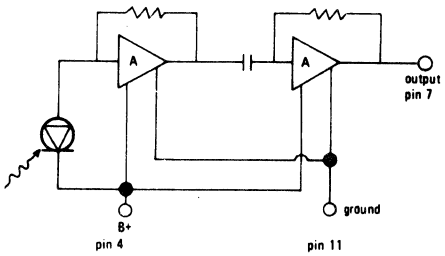

BE25 Photodiode W/Power Amp

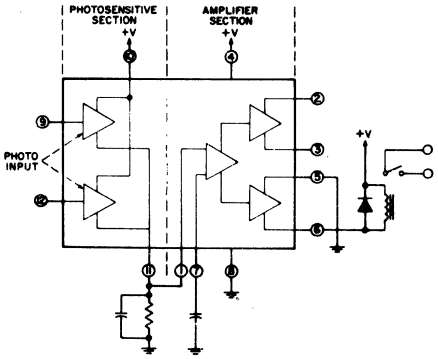

BE29 Phototransistor W/Schmitt Trigger

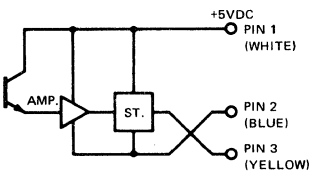

BE38 Photodiode W/Op Amp

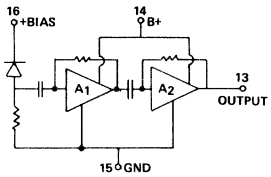

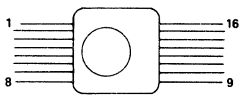

1 INCH SQUARE FLAT PACK

BE39 Photodiode W/Op Amp

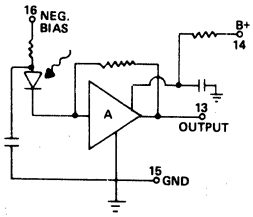

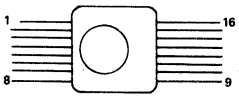

1 INCH SQUARE FLAT PACK

BE42 Pyroelectric Detector W/Voltage & Current Amplifier

PIN CONNECTIONS

Pin	Detector only	Detector + Voltage Mode Amplifier	Detector + Current Mode Amplifier
1	N/C	to pin 2	−15 VDC =
2	N/C	+ 15 VDC =	+ 15 VDC =
3	N/C	N/C	Output
4	Output	N/C	N/C
5	N/C	N/C	to pin 3
6	N/C	Output	N/C
7	Case	Case	Case
8	GND	GND	GND

48. SCHEMATIC DRAWINGS

BE43 Pyroelectric Detector W/Current Amplifier

PIN CONNECTIONS:

1	−15 VDC =
2	+15 VDC =
3	Output
4	N/C
5	N/C
6	N/C
7	Case
8	GND

Pin designations can be changed according to customer requirements.

BE44 Pyroelectric Detector W/Voltage Amplifier

PIN CONNECTIONS:

1	N/C
2	+ 15 VDC =
3	N/C
4	N/C
5	N/C
6	Output
7	Case
8	GND

Pin designations can be changed according to customer requirements.

BE37 Photodiode W/Op Amp

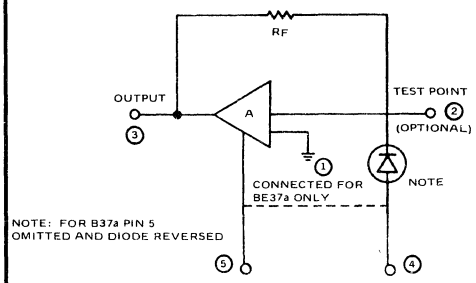

BE40 Photodiode W/Op Amp

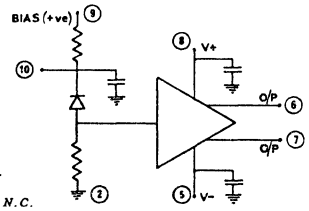

CONNECTIONS:

Pin 1	*N.C.*
2	*Earth*
3	*N C.*
4	*Can (isolated)*
5	*V⁻*
6	*Output A*
7	*Output B*
8	*V⁺*
9	*Diode Bias Volts*
10	*Diode Decouple*

BE47 Pyroelectric Detector W/Op Amp

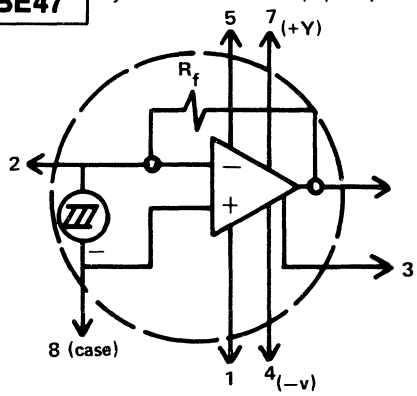

BE48 Pyroelectric Detector W/FET Preamp

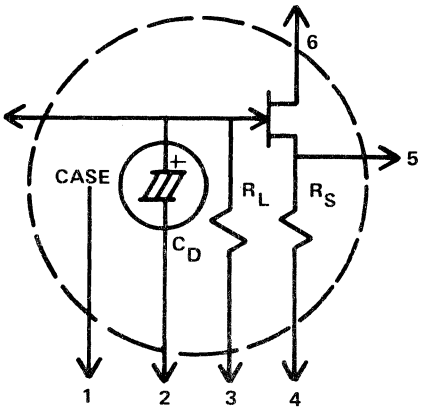

BE58 Photocoupled Bilateral Analog FET

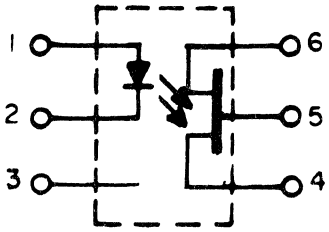

BE59 Pyroelectric Detector W/FET Preamp

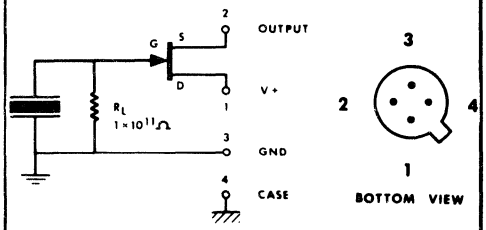

BE60 Pyroelectric Detector W/Op Amp

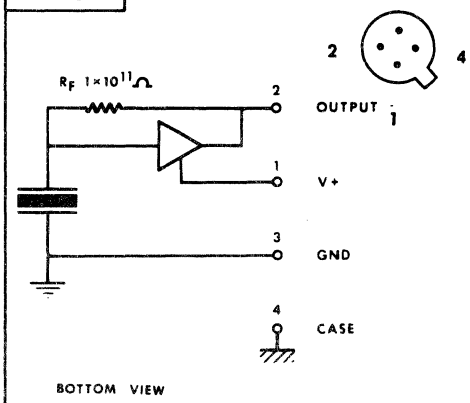

BE103 Optoschmitt

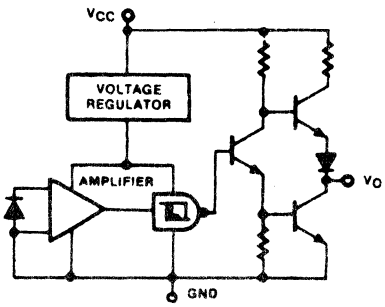

48. SCHEMATIC DRAWINGS

BE62
Photodiode Preamp Module

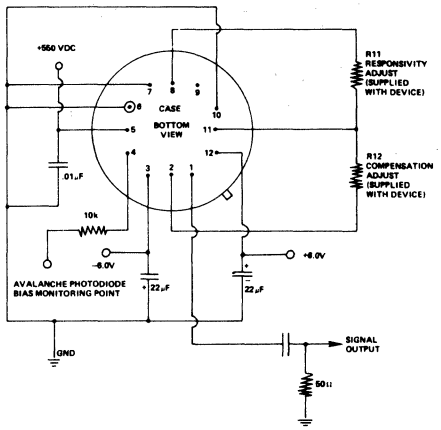

BE63
Hybrid Phototdiode FET Module

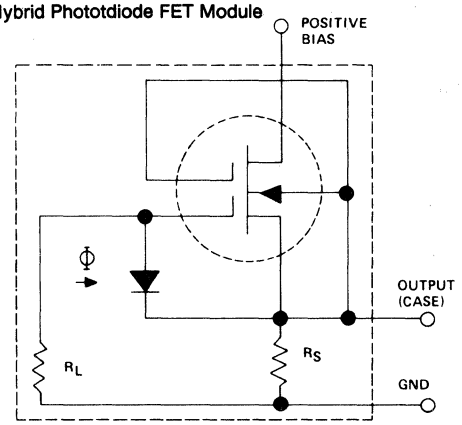

BE64
Hybrid Detector/Amplifier Module

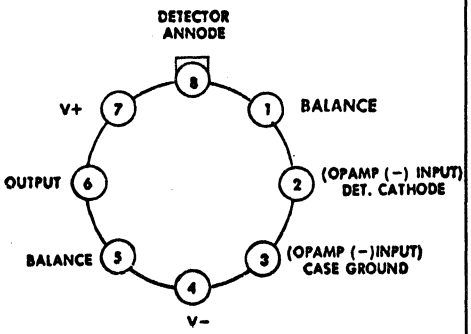

BE65
Optocoupled Switch

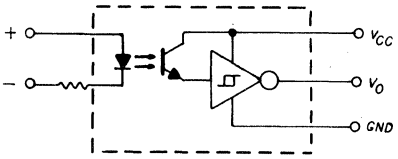

BE69
Light-Threshold Detector

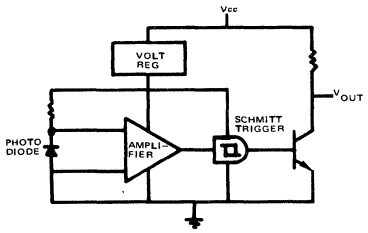

BE70
Light-Threshold Detector

LSTTL Output

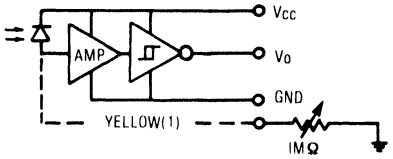

Open Collector

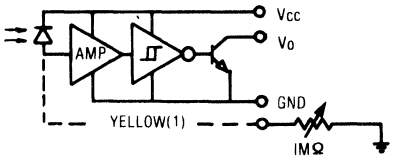

BE71
Hybrid FET Detector Preamplifier

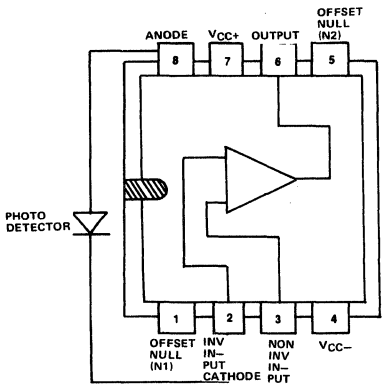

BE104
Optoschmitt

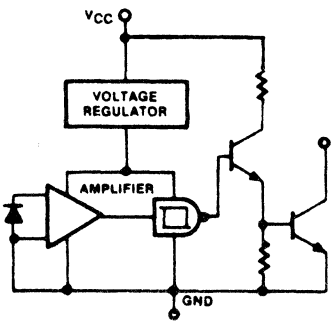

BE105
Optoschmitt

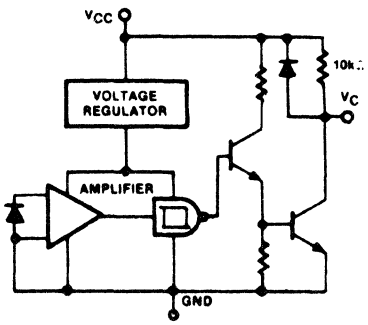

48. SCHEMATIC DRAWINGS

BE77 Photodetector W/Amplifier

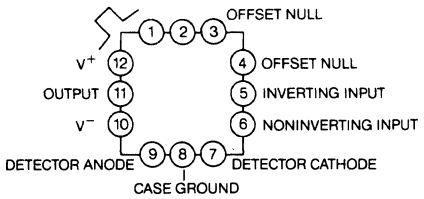

BE79 Photodiode w/Amplifier

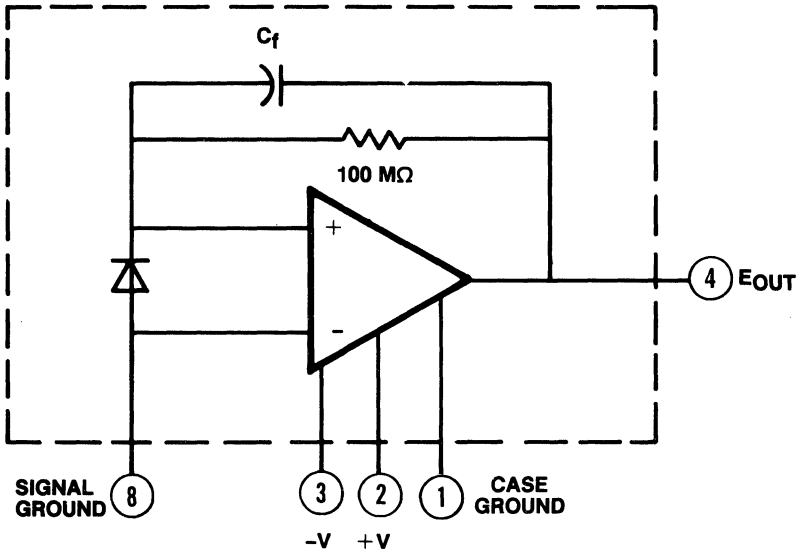

BE80 Photo Diode Sensor w/Schmitt Trigger

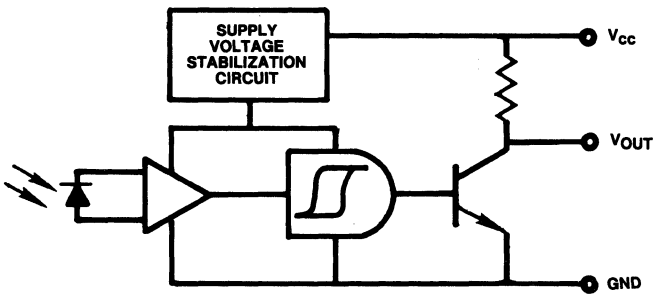

BE82 Photo I.C. Sensor with Adjustable Sensitivity

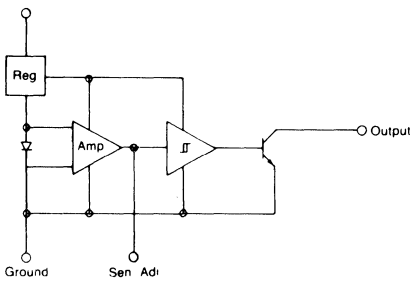

BE81 Integrated Detector Preamplifier

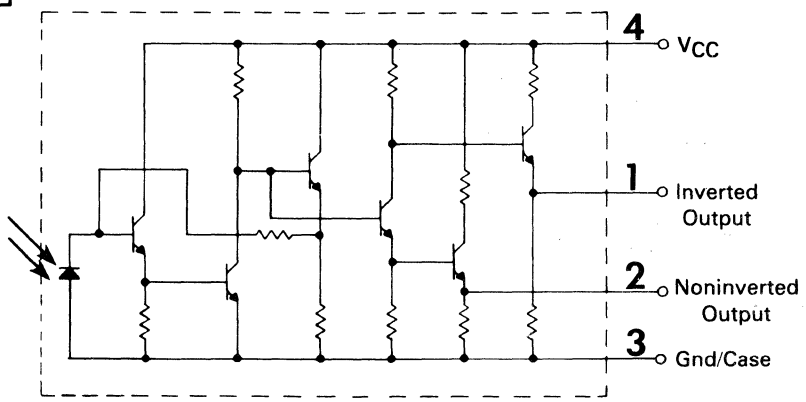

BE83 Photo I.C. Sensor

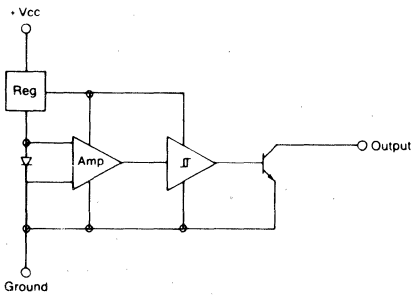

FUNCTIONAL BLOCK DIAGRAM OT 150/OT 160

48. SCHEMATIC DRAWINGS

BE85 Optoschmitt

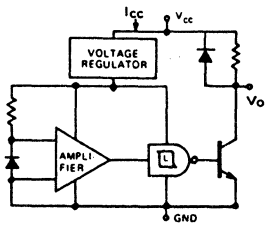

BE86 5 Mbit Fiber Optic Receiver

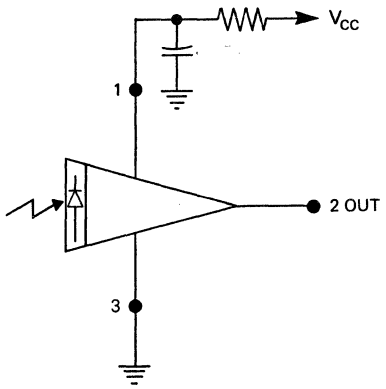

BE87 Single Element UV/VIS/IR Pyroelectric Detector

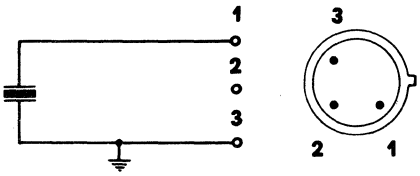

1. OUTPUT
2. N/C
3. GND

BE88 Single Element Pyroelectric IR Detector w/Source Follower

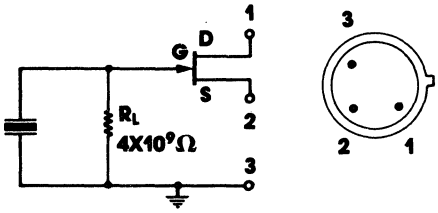

1. V+
2. OUTPUT
3. GND/CASE

BE89 Dual Element Thermally Compensated Pyroelectric IR Detector

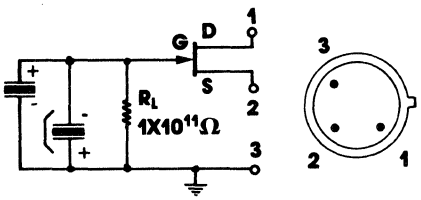

1. V+
2. OUTPUT
3. GND/CASE

BE90 Dual Pyroelectric IR Detector w/Source Follower

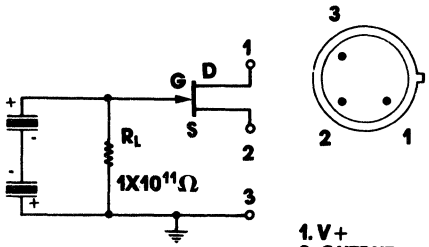

1. V+
2. OUTPUT
3. GND/CASE

BE91 Parallel Opposed Dual Pyroelectric IR Detector w/Source Follower

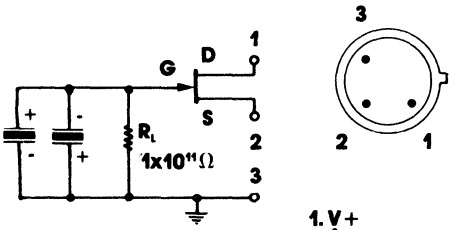

1. V+
2. OUTPUT
3. GND/CASE

BE92 Parallel Opposed Dual Pyroelectric IR Detector w/Internal Amplifier

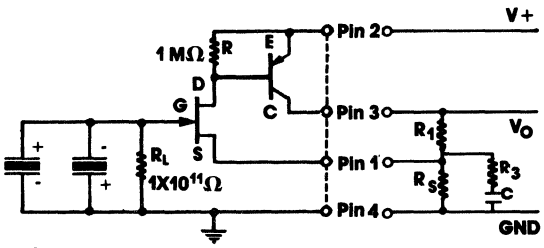

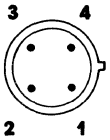

1. SOURCE
2. V+
3. COLLECTOR
4. GND

BE94 Single/Dual IR-Eye Passive Sensing Module

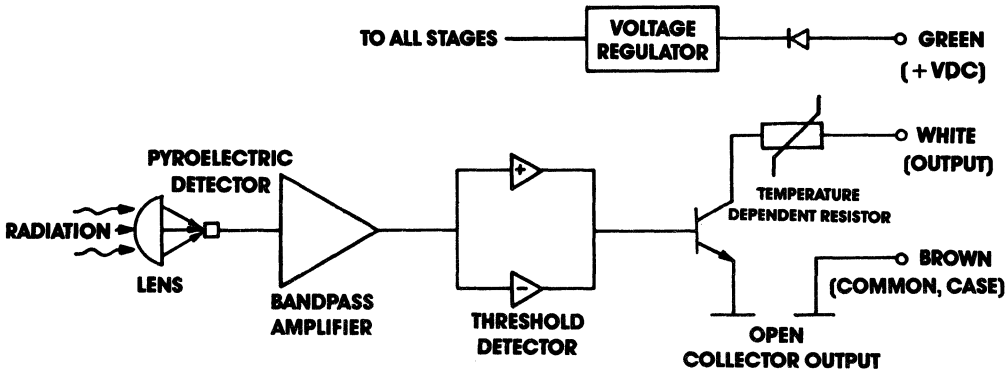

48. SCHEMATIC DRAWINGS

BE93
2 Channel Pyroelectric IR Detector w/Source Follower

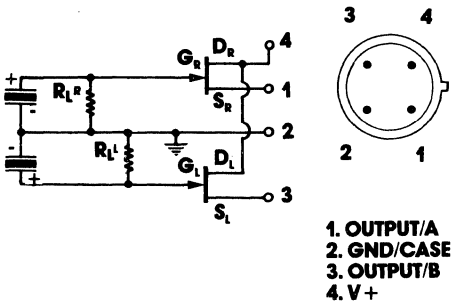

BE95
Pyroelectric IR Detector

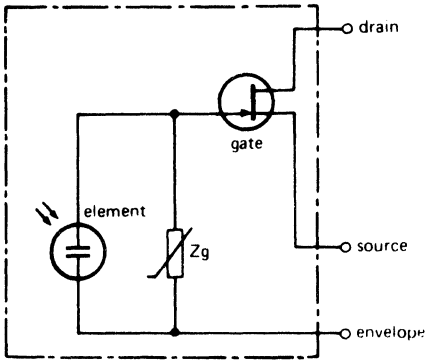

BE96
Op Amp/Photodiode Combination

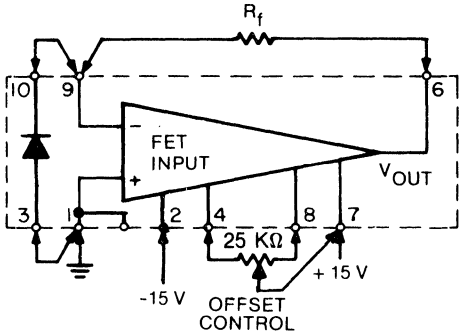

BE97
Op Amp/Photodiode Combination

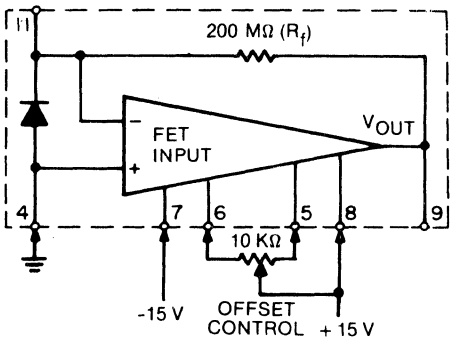

BE98
Op Amp/Photodiode Combination

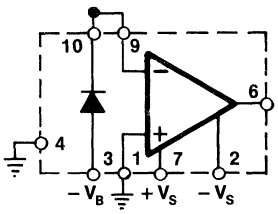

Pin Assignments

1	Signal Ground (+In)	6	Output
2	−V Supply	7	+V Supply
3	−V Bias (Anode)	8	Compensation
4	Case Ground	9	Inverting Input (−In)
5	Not Connected	10	Cathode

BE75
Light-Activated Switch

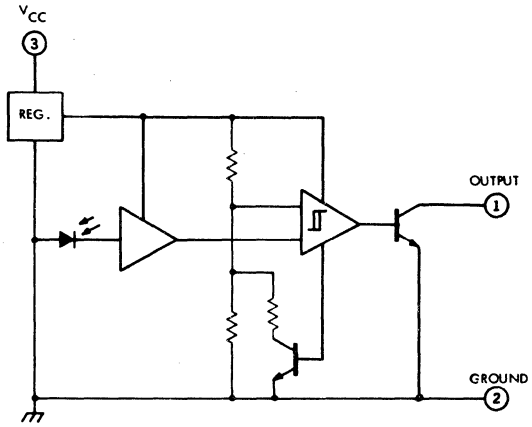

BE74
Light-Activated Switch

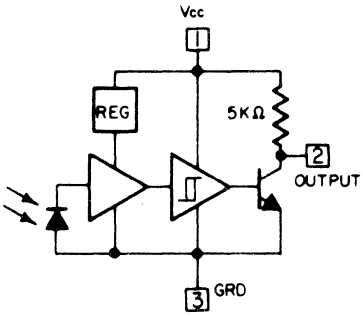

48. SCHEMATIC DRAWINGS

BF36 Quad Photodiode Array

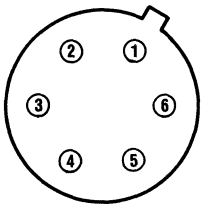

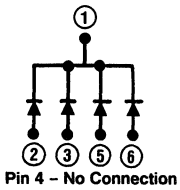

BF35 Quad Photodiode Array

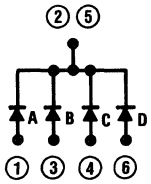

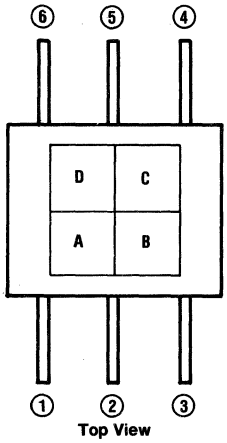

BF3 6-Element Phototransistor Array

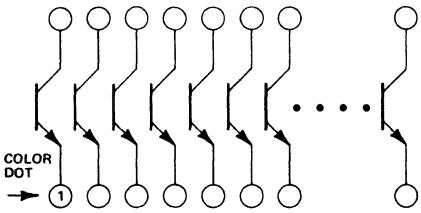

BF5 Photodiode Array

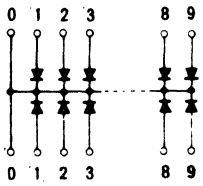

BF37 Photodiode Array

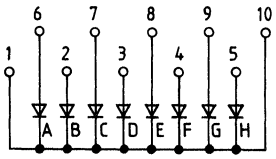

BF8 Self-Scanned Linear Photodiode Array

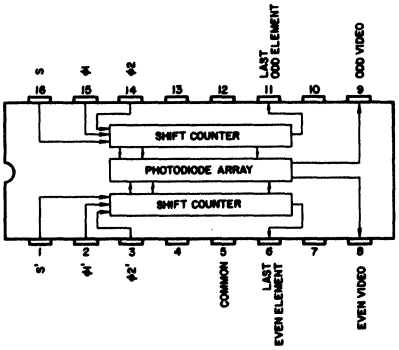

BF38 Circular Segmented Photodiode

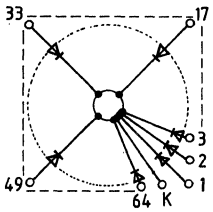

BF10 Self-Scanned Linear Photodiode Array

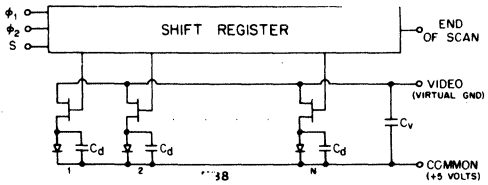

BF10a

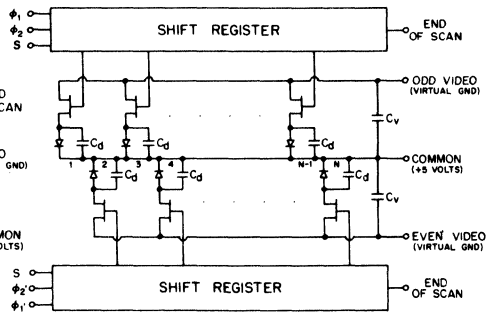

48. SCHEMATIC DRAWINGS

BF12 Self-Scanned Linear Photodiode Array

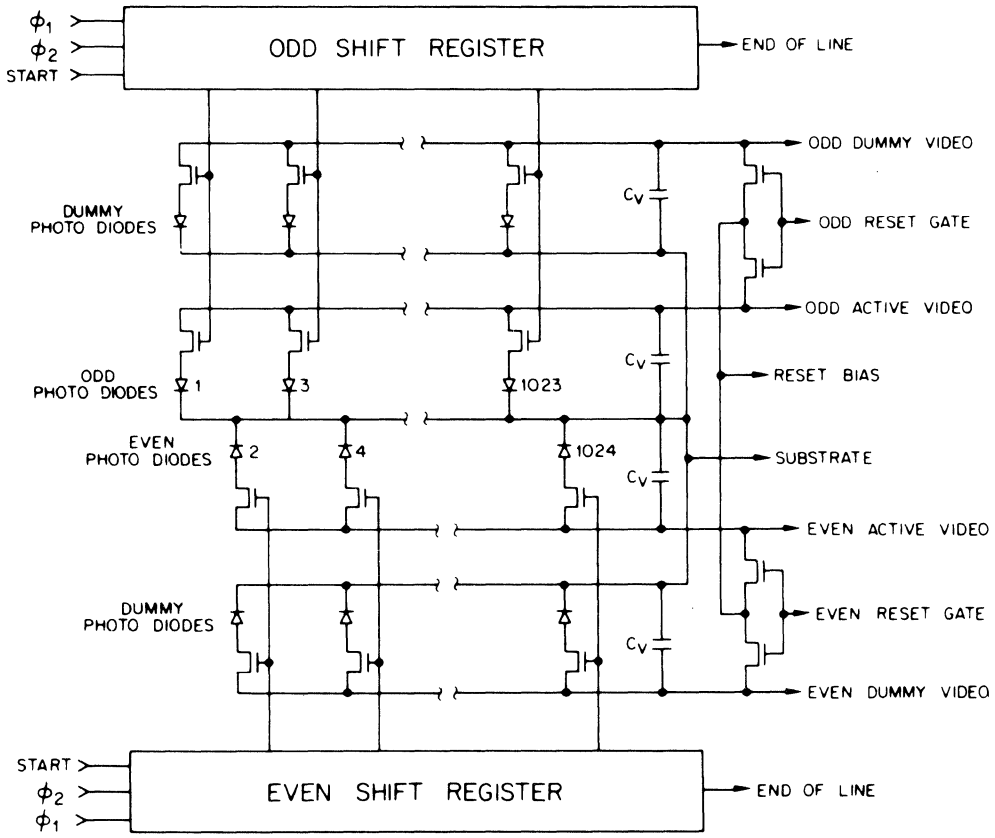

BF14 Solid State Line Scanner

S'	1	22	S
ϕ_2'	2	21	ϕ_2
ϕ_1'	3	20	ϕ_1
	4	19	
	5	18	
COMMON	6	17	COMMON
EVEN EOS	7	16	ODD EOS
	8	15	
	9	14	
	10	13	
EVEN VIDEO	11	12	ODD VIDEO

BF15 Solid State Line Scanner

S'	1	16	S
ϕ_2'	2	15	ϕ_2
ϕ_1'	3	14	ϕ_1
	4	13	
COMMON	5	12	
EVEN EOS	6	11	ODD EOS
	7	10	
EVEN VIDEO	8	9	ODD VIDEO

BF16 Solid State Line Scanner

S'	1	18	S
ϕ_2'	2	17	ϕ_2
ϕ_1'	3	16	ϕ_1
COMMON	4	15	COMMON
EVEN EOS	5	14	ODD EOS
	6	13	
	7	12	
	8	11	
EVEN VIDEO	9	10	ODD VIDEO

BF17 Solid State Line Scanner

NEG SUPPLY	1	16	CLOCK
START	2	15	NC
NC	3	14	GROUND
NC	4	13	NC
POS SUPPLY	5	12	END OF SCAN
BUFFER SUPPLY	6	11	DUMMY RECHARGE
VIDEO RECHARGE	7	10	RECHARGE GATE
VIDEO BUFFER	8	9	DUMMY BUFFER

BF18 Solid State Line Scanner

NEG SUPPLY	1	18	NC
START	2	17	CLOCK
NC	3	16	GROUND
POS SUPPLY	4	15	POS SUPPLY
BUFFER SUPPLY	5	14	END OF SCAN
NC	6	13	NC
VIDEO RECHARGE	7	12	NC
VIDEO BUFFER	8	11	DUMMY RECHARGE
DUMMY BUFFER	9	10	RECHARGE GATE

48. SCHEMATIC DRAWINGS

BF19 Solid-State Line Scanner

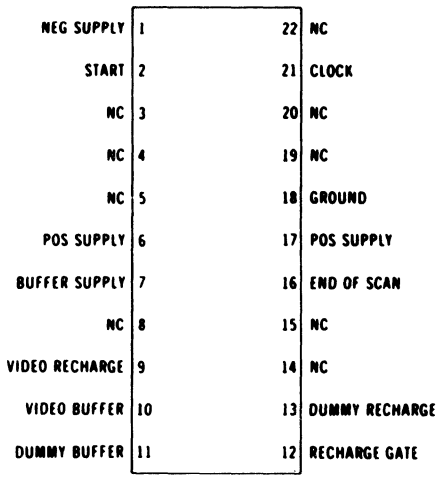

BF21 High Speed Tapped Charge-Coupled Linear Photodiode Array

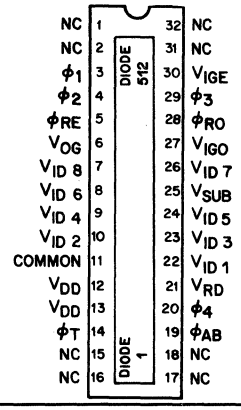

BF22 High Speed Tapped Charge-Coupled Linear Photodiode Array

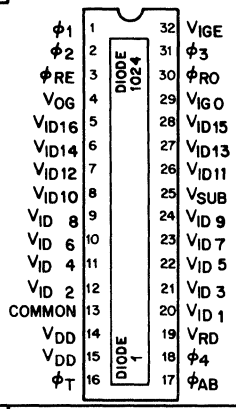

BF23 8 Element Photo Diode Sensor Array

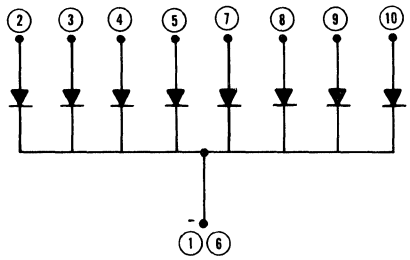

BF24 Quad Photo Diode Sensor Array

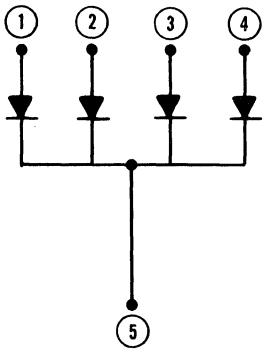

BF25 Quad Photo Diode Sensor Array

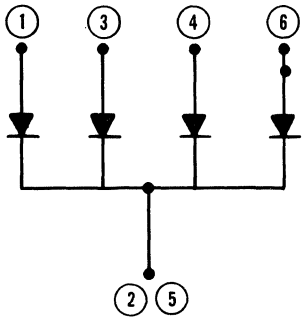

BF26 6 Element Photo Diode Sensor Array

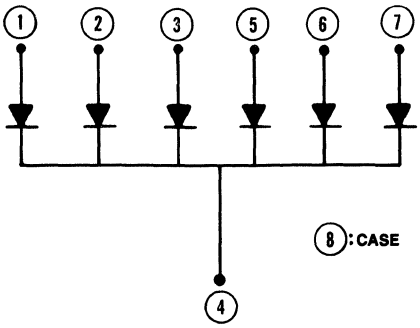

BF28 Solid-State Line Scanner

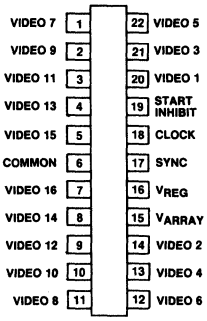

BF29 Solid-State Line Scanner

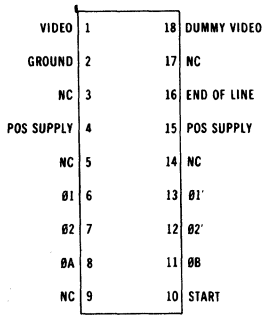

BF30 Solid-State Line Scanner

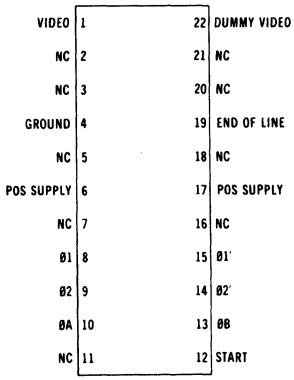

48. SCHEMATIC DRAWINGS

BF27 Image Sensor Array

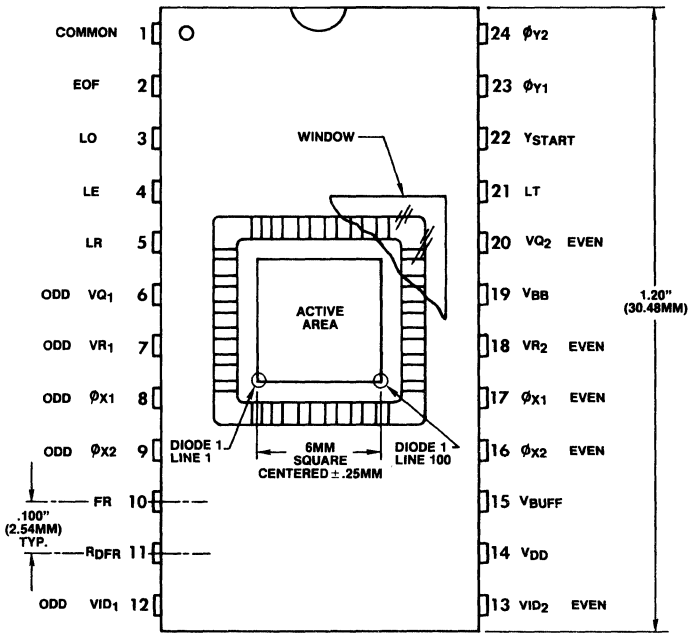

CA23 Optocoupler W/Multi-tapped Sensors

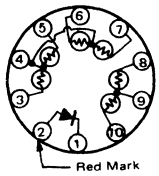

CA24 Optocoupler W/Multiple Sensors

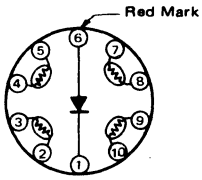

CA25 Ne Lamp + CdS Photo Coupler

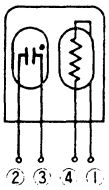

CA27 Photocell Opto-isolator

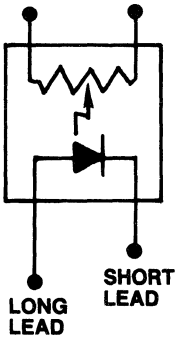

CA28 Opto-Isolator

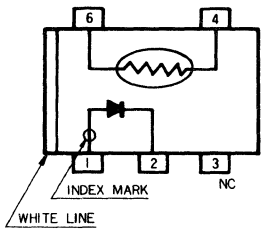

AC input Opto-Isloator

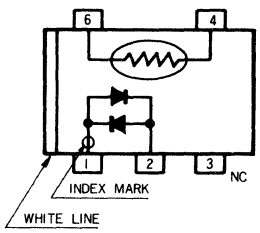

CA28a

48. SCHEMATIC DRAWINGS

CA1 Optocoupler

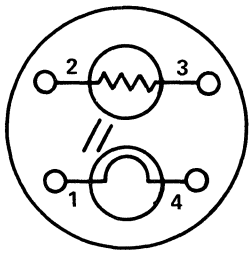

CA2 Optocoupler

DOTTED LEAD
FOR CA2a ONLY.

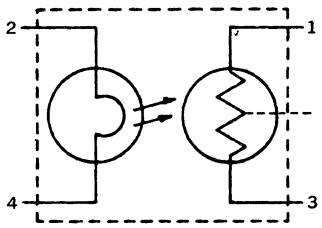

1-3 PHOTOCELL

2-4 LIGHT SOURCE

CA3 Optocoupler

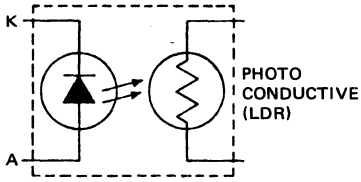

	A	K	PHOTO CONDUCTIVE (LDR)	
CA3	4	2	3	1
CA3a	3	4	1	2
CA3b	1	2	5	6

CA4 Optocoupler

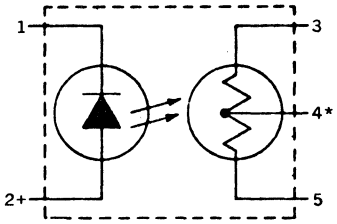

*– LEAD OMITTED ON CA4a.

CA5 Optocoupler

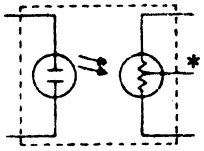

*–LEAD FOR CA5a ONLY.

CA6 Optocoupler

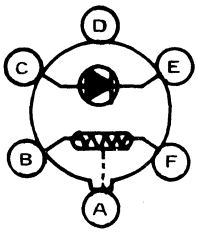

DOTTED LINE FOR CA6a ONLY.

	A	B	C	D	E	F
CA6	–	1	2	–	3	4
CA6a	6	1	2	3	4	5

CA7 Optocoupler W/Dual Sensors

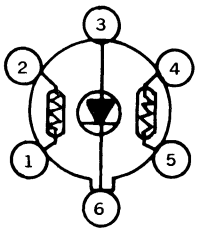

CA8 Optocoupler W/Neon Light Source

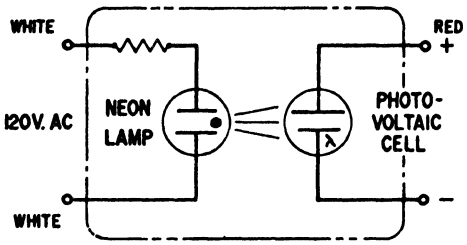

CA10 PC-Mount Optocoupler

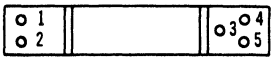

Bottom View

Pins 1, 2. Control Circuit (Light Source)
Pin 3. Shield (Ground)
Pins 4, 5. Signal Circuit (Photosensitive Resistor)

CA11 Dual Optocoupler

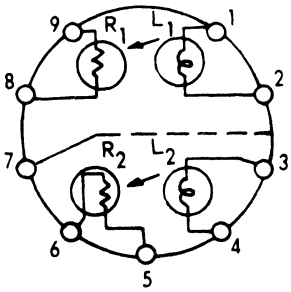

L_1 L_2 Control–lights

R_1 R_2 Photoconductors

CA12 Emmiter W/Dual Sensor

TERMINAL CONNECTIONS.
CONTROL CIRCUIT

PINS #1 & #2 - ENERGY EMITTER
IDENTIFIED - YELLOW DOT.

SIGNAL CIRCUIT
PINS #3 & #4 PHOTO RESISTOR #1
PINS #5 & #6 PHOTO RESISTOR #2

BOTTOM VIEW

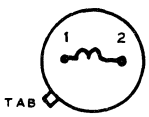

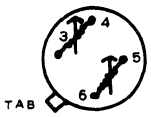

CA13 Dual Optocoupler

TERMINAL CONNECTIONS
CRYSTAL CAN – 6-PIN HEADER

PIN #1 – PC #1
PIN #2 – PC #2
PIN #3 – PC #1
PIN #4 – PC #2
PIN #5 – LAMP CONTROL
PIN #6 – LAMP CONTROL

48. SCHEMATIC DRAWINGS

CA14 Optocoupler W/Dual Sensor

SCHEMATIC

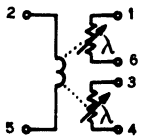

TERMINAL CONNECTIONS

PINS #2 & #5 – CONTROL CIRCUIT (ENERGY EMITTER)
PINS #1 & #6 – SIGNAL CIRCUIT (PHOTORESISTOR #1)
PINS #3 & #4 – SIGNAL CIRCUIT (PHOTORESISTOR #2)

CA16 AC-Input Optocoupler

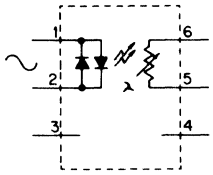

CA17 Optocoupler

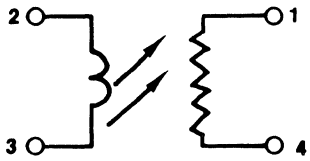

CA18 Optocoupler W/Neon Light Source

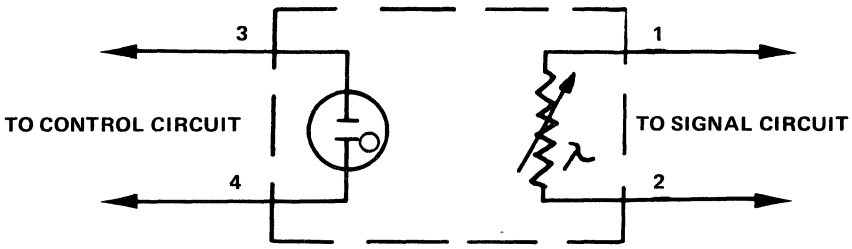

CA19 Optocoupler

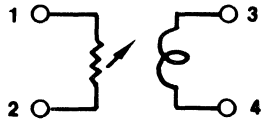

CA20 Optocoupler

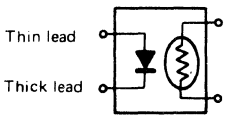

CA21 Optocoupler W/Center-Tapped Sensors

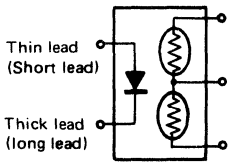

CA22 Optocoupler W/Dual Sensors

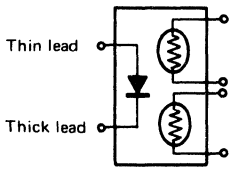

CA29 Neon Photoconductor Isolator

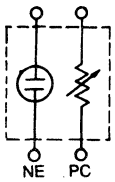

CA30 Neon Photoconductor Isolator

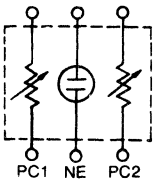

48. SCHEMATIC DRAWINGS

CB1 Emitter/Detector Pair

	A	K	E	C
CB1	1	2	4	3
CB1a	1	2	3	4
CB1b	14	1	7	8
CB1c	1	2	4	5
CB1d	4	1	3	2
CB1e	3	4	1	2
CB1f	4	2	1	3
CB1g	1	2	5	4
CB1h	3	4	2	1
CB1i	2	1	3	4
CB1j	4	1	2	3

CB2 Optocoupler Switch

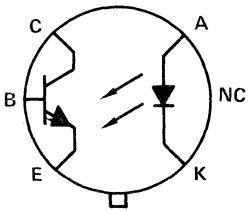

	C	B	E	A	K	REMARKS
CB2	3	2	1	5	7	
CB2a	5	6	4	1	2	
CB2b	3	2	1	5	7	Collector Isolated

CB4 Optocoupler Switch

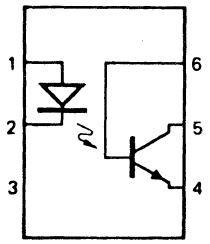

LED CHIP ON PIN 2
PT CHIP ON PIN 5

PIN NO.	FUNCTION
6	NC

CB5 Dual Optocoupler

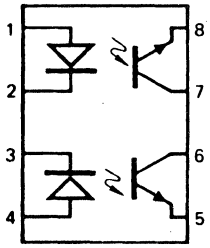

LED CHIPS ON PINS 2 AND 3
PT CHIPS ON PINS 6 AND 7

CB6 Quad Optocoupler

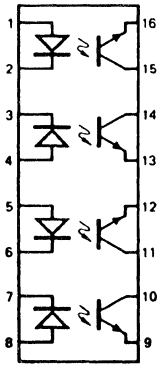

LED CHIPS ON PINS 2, 3, 6, 7
PT CHIPS ON PINS 10, 11, 14, 15

CB12 AC-Input Optocoupled Switch

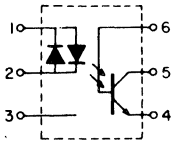

CB13 Optocoupler

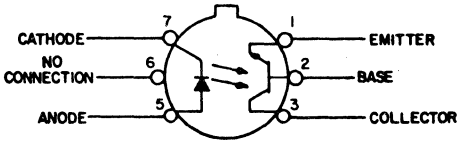

CB13–COLLECTOR CONNECTED INTERNALLY TO CASE
CB13a – COLLECTOR ISOLATED FROM CASE

CB52 Octocoupler

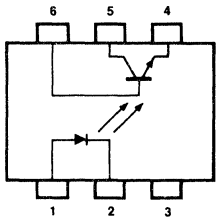

(Top View)
1. Anode
2. Cathode
3. NC
4. Emitter
5. Collector
6. Base

CB14 Optocoupler

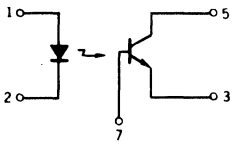

1. Anode (Case)
2. Cathode
3. Emitter
5. Collector
7. Base

	A	K	B	E	C
CB14	1	2	7	3	5
CB14a	1	2	3	5	4
CB14b	1	2	4	5	3

CB17 Triple Optocoupler

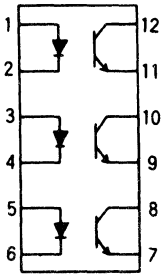

CB21 Optoisolator

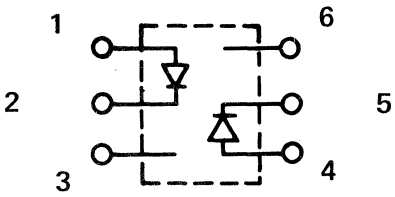

CB22 Emitter/Sensor Pair

PIN DESIGNATIONS	
1	EMITTER
2	BASE
3	COLLECTOR
5	ANODE
6	NC
7	CATHODE

48. SCHEMATIC DRAWINGS

CB23 High Speed Dual Optocoupler

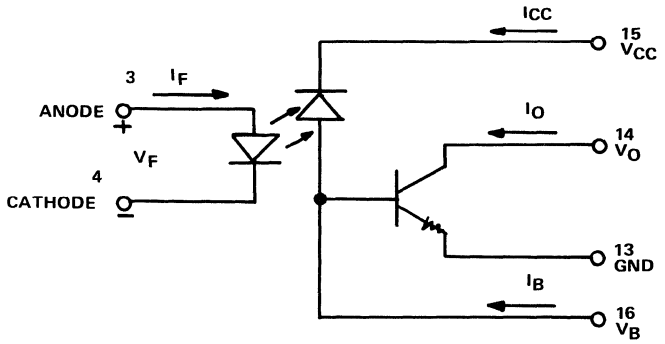

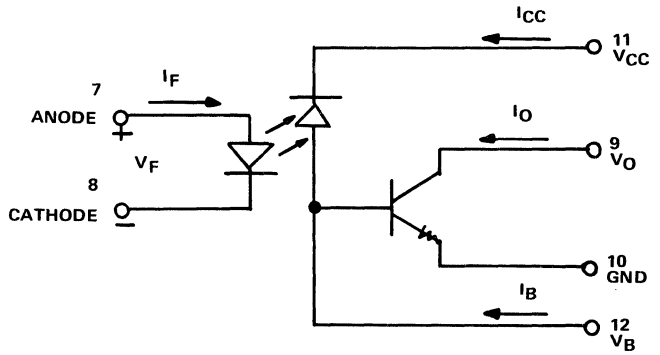

CB25 Optocoupler

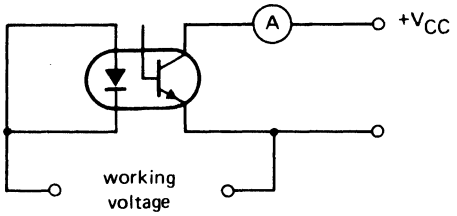

CB26 Optocoupler

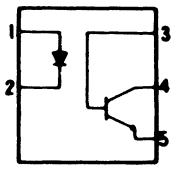

CB28 Optocoupler

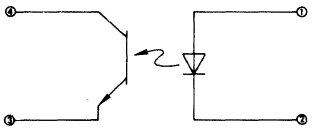

CB30 Dual Optocoupler

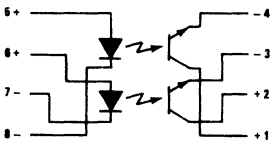

PINS 1, 4, 5 & 8 FOR UPPER CHANNEL
PINS 2, 3, 6 & 7 FOR LOWER CHANNEL

CB31 Quad Optocoupler

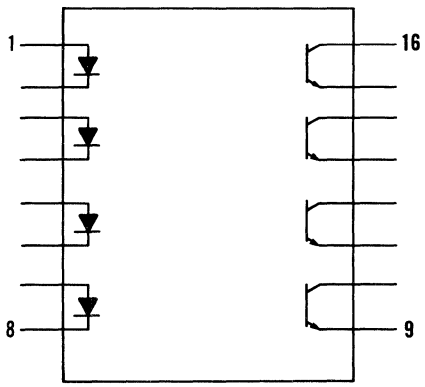

CB32 Photo-FET Optocoupler

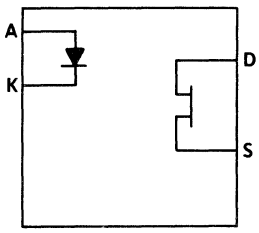

	A	K	D	S
CB32	1	2	6	4

CB34 5-Channel Optocoupler

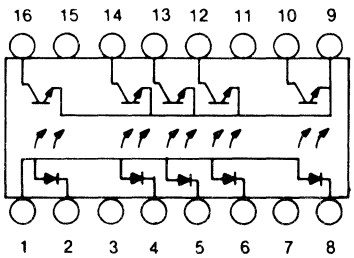

CB37 5-Channel Optocoupler

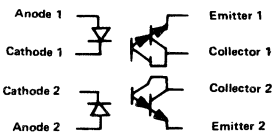

	Input			
	Anode 1	Cathode 1	Anode 2	Cathode 2
Pin number	1	2	4	3

	Output			
	Emitter 1	Collector 1	Emitter 2	Collector 2
Pin number	8	7	5	6

48. SCHEMATIC DRAWINGS

CB39 Optocoupler

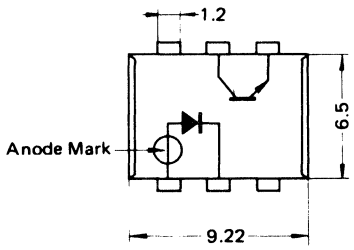

CB40 Optocoupler

1–EMITTER
2–CATHODE
3–COLLECTOR
4–ANODE

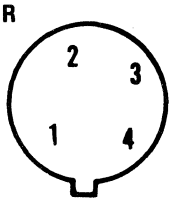

CB41 Photo Diode/Transistor Opto-Isolation

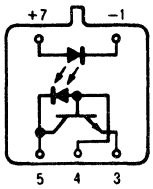

CB42 Dual Opto-Coupler

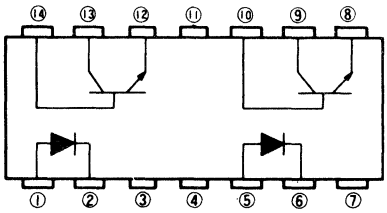

1	Anode	LED	8	Emitter	Photo transistor
2	Cathode		9	Collector	
3	NC		10	Base	
4	NC		11	NC	
5	Anode		12	Emitter	
6	Cathode		13	Collector	
7	NC		10	Base	

CB44 Dual Opto-Coupler

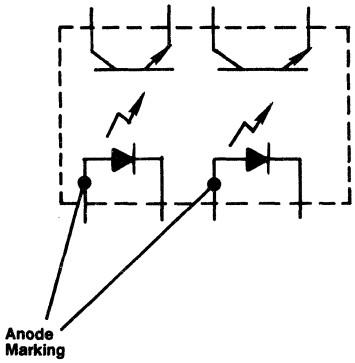

CB45 Single NPN Opto-Coupler

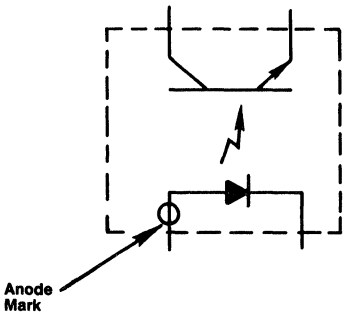

CB46 Opto-Coupler w/NPN

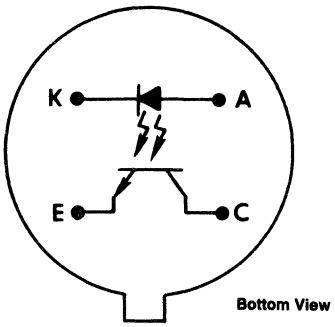

CB48 High Isolation Voltage NPN Optocoupler

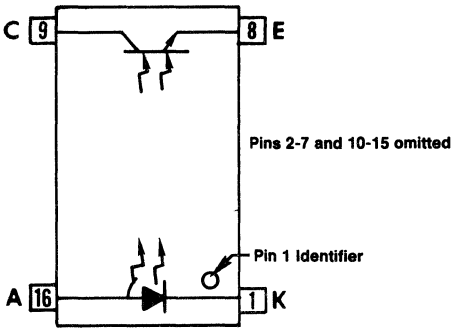

CB47 High Isolation Voltage NPN Opto-Coupler

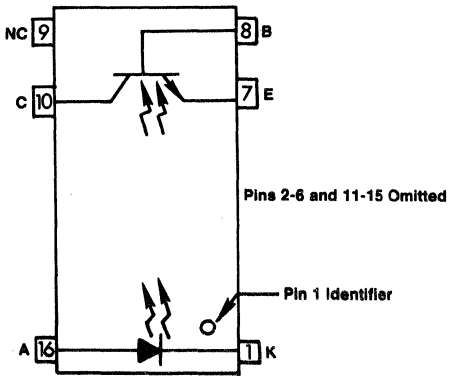

CB53 Dual Channel Octocoupler

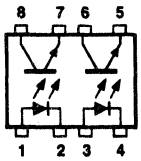

1. 3. Anode
2. 4. Cathode
5. 7. Emitter
6. 8. collector

CB50 AC input Opto-isolator

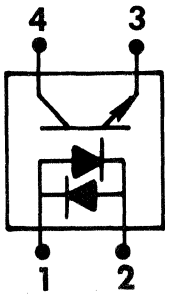

48. SCHEMATIC DRAWINGS

CB54 Photo Coupler

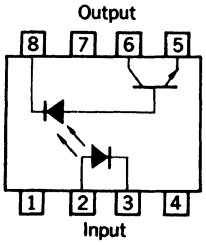

CB55 Photo Coupler

(PS2041)

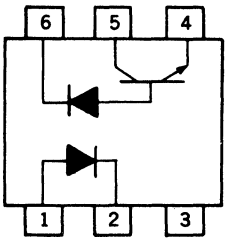

(PS2042)

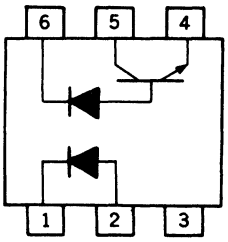

CB56 Photo Coupler

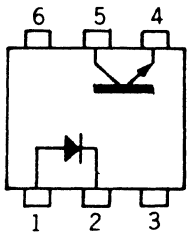

CC15 Dual Darlington Opto-Coupler

(TOP VIEW)

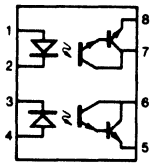

PIN NO.	FUNCTION
1	ANODE
2	CATHODE
3	CATHODE
4	ANODE
5	EMITTER
6	COLLECTOR
7	COLLECTOR
8	EMITTER

LED CHIPS ON PINS 2 AND 3
PT CHIPS ON PINS 6 AND 7

CC16 Quad Darlington Opto-Coupler

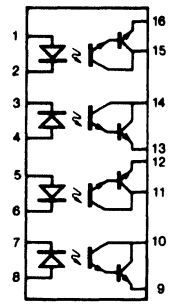

PIN NO.	FUNCTION
1	ANODE
2	CATHODE
3	CATHODE
4	ANODE
5	ANODE
6	CATHODE
7	CATHODE
8	ANODE
9	EMITTER
10	COLLECTOR
11	COLLECTOR
12	EMITTER
13	EMITTER
14	COLLECTOR
15	COLLECTOR
16	EMITTER

LED CHIPS ON PINS 2, 3, 6, 7
PT CHIPS ON PINS 10, 11, 14, 15

CC1 Photodarlington Optocoupler

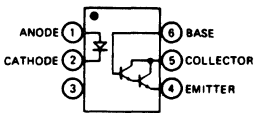

CC11 High Speed Optocoupler

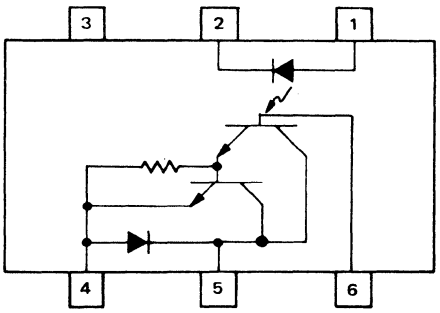

CC7 High Speed Optocoupler with Base/Collector Output

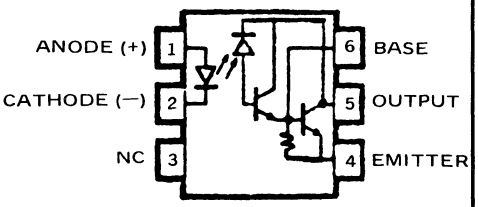

CC7a — PIN 6 NC

CC4 Photodarlington Optocoupler

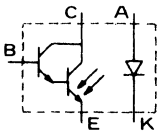

	C	B	E	A	K
CC4	3	2	1	4	5
CC4a	3	2	1	5	7
CC4b	3	4	5	1	2

CC3 Photodarlington Optocoupler

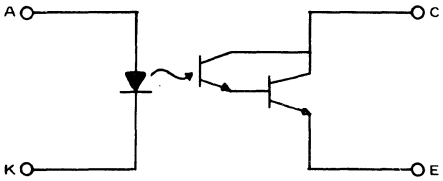

	A	K	C	E
CC3	1	2	3	4
CC3a	1	2	4	3
CC3b	1	2	5	4
CC3c	1	2	3	5

CC8 High Speed Optocoupler with Base/Collector Output

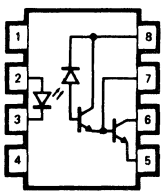

PIN	
1	N/C
2	LED ANODE
3	LED CATHODE
4	N/C
5	GROUND
6	OUTPUT
7	OUTPUT BASE
8	V_{CC}

48. SCHEMATIC DRAWINGS

CC9 High Speed Optocoupler with Thermal Compensation

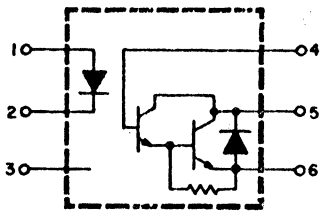

CD1 SCR-Output Optocoupler

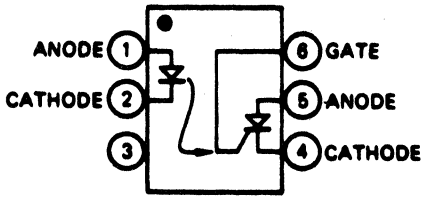

CD2 Photothyristor Optocoupler

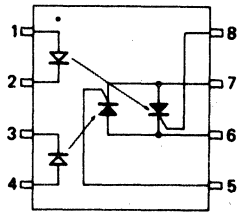

CD3 Optically Isolated Triac Driver

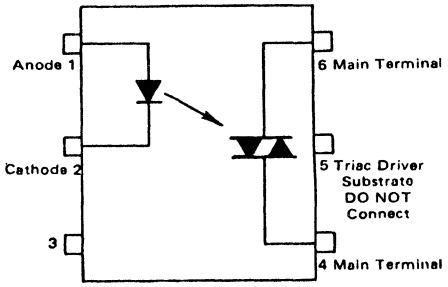

CD13 Optically Coupled Triac Driver

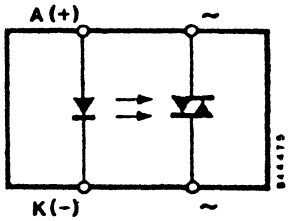

CD9 Optically Isolated Triac Driver

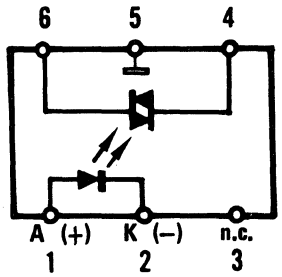

CD11 Optically Coupled SCR

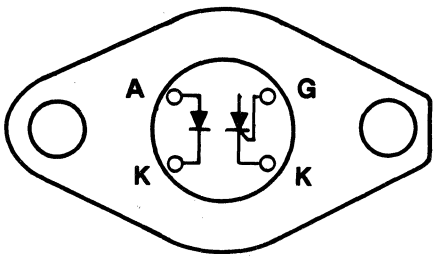

48. SCHEMATIC DRAWINGS

CD4 Photothyristor Optocoupler

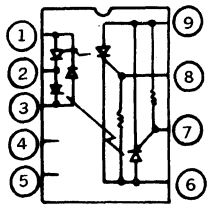

CD5 Photothyristor Optocoupler

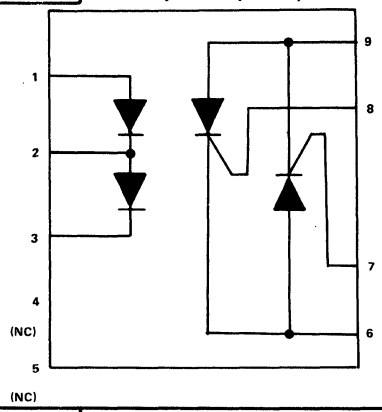

CD6 Photothyristor Optocoupler

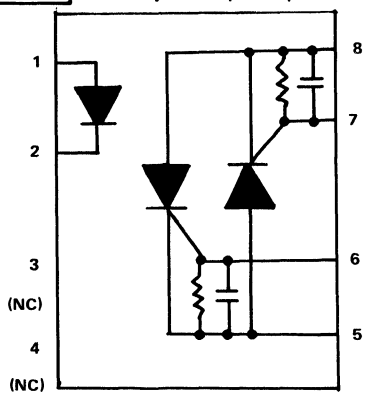

CD7 Triac-Output Optocoupler

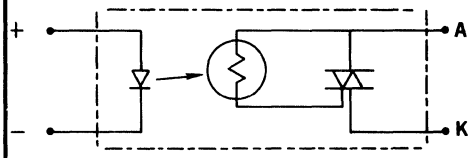

CD8 Triac-Output Optocoupler

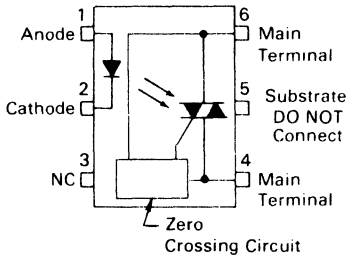

CD12 Optically Coupled SCR

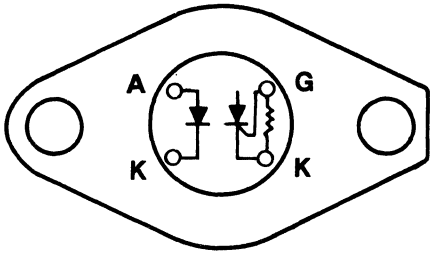

CD10 Optocoupler, Dual Photo SCR

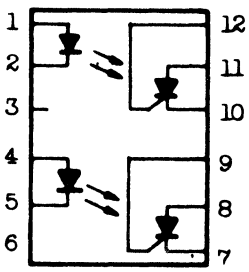

CE6 High-Speed Optocoupler

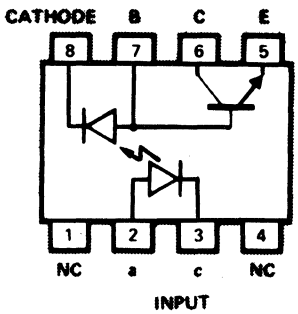

	PIN NUMBERS							
	1	2	3	4	5	6	7	8
CE6	NC	A	C	NC	E	C	B	CATHODE
CE6a	NC	ANODE	CATHODE	NC	GND	OUTP	BASE	VCC
CE6b	NC	A	C	NC	E	Vo	B	VCC

48. SCHEMATIC DRAWINGS

CE12 High-Speed Optocoupler

PIN 1. ANODE
2. CATHODE
3. N.C.
4. EMITTER
5. COLLECTOR
6. N.C.

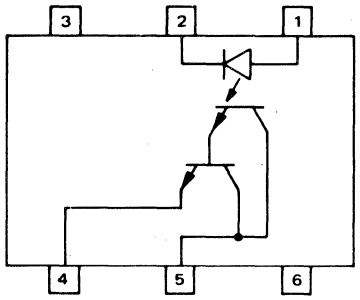

CE14 Optically Coupled Gate

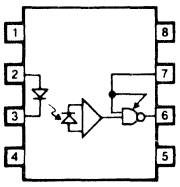

PIN NO.

1	NC
2	ANODE
3	CATHODE
4	NC
5	GROUND
6	V_O
7	GATE
8	V_{CC}

CE15 Dual TTL-Compatible Optocoupler

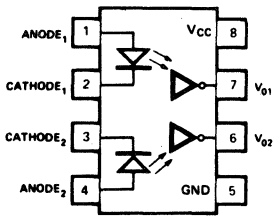

CE16 Dual TTL-Compatible Optocoupler

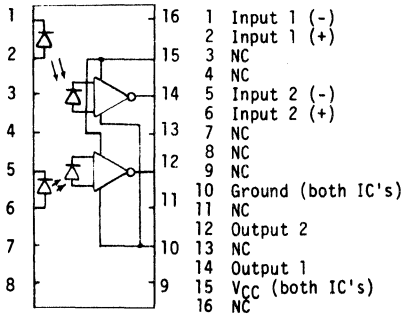

1	Input 1 (-)
2	Input 1 (+)
3	NC
4	NC
5	Input 2 (-)
6	Input 2 (+)
7	NC
8	NC
9	NC
10	Ground (both IC's)
11	NC
12	Output 2
13	NC
14	Output 1
15	V_{CC} (both IC's)
16	NC

CE17 High CMR High-Speed Optocoupler

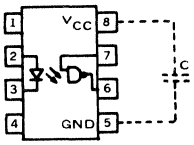

Terminal Function

1	NC
2	Anode (+)
3	Cathode (−)
4	NC
5	Ground
6	Output
7	Enable
8	V_{CC}

All leads insulated from case.

CE18 High CMR Line Receiver Optocoupler

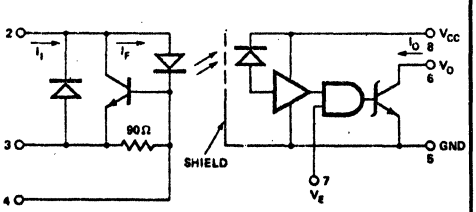

CE19 Dual High Gain Optocoupler

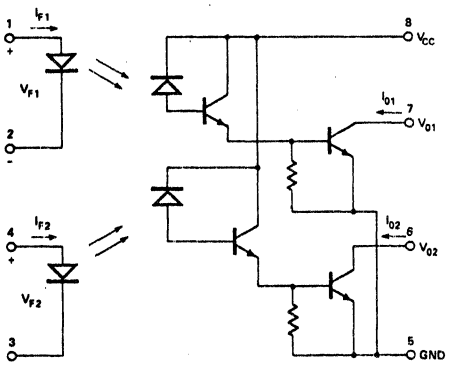

CE21 Quad High Gain Optocoupler

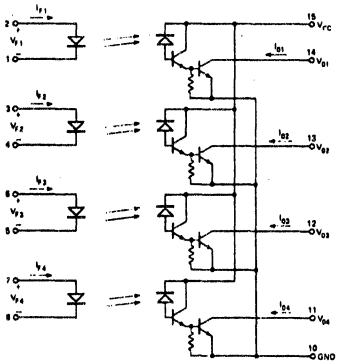

CE22 Photodiode Receiver W/Preamp

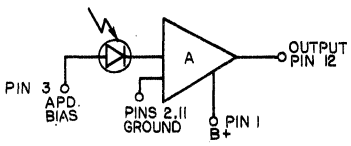

CE23 Photodiode Receiver W/Preamp

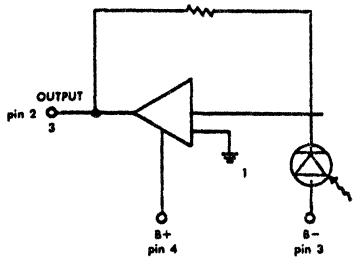

CE24 AC/DC-to-Logic Interface Optocoupler

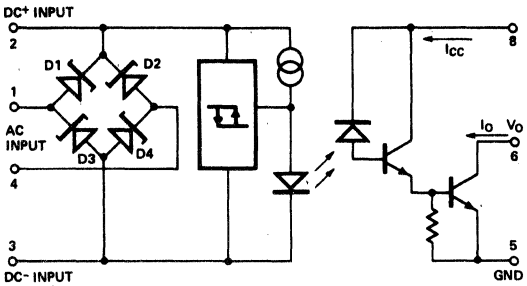

48. SCHEMATIC DRAWINGS

CE27 Opto Switch W/TTL Output

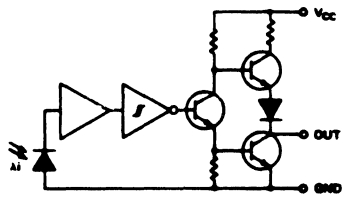

CE28 Opto Switch W/Open-Collector Output

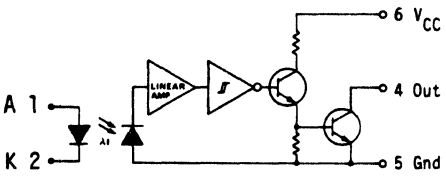

CE29 Opto Switch W/Schmitt Trigger Output

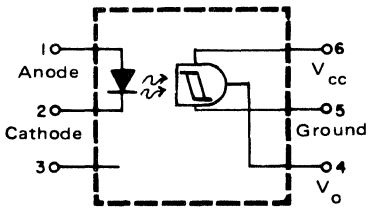

CE30 Opto Switch W/Schmitt Trigger Output

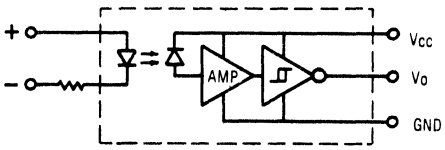

LSTTL Output

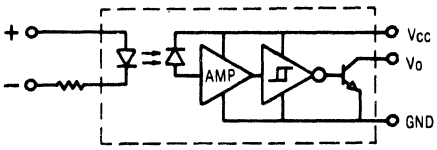

Open Collector

CE32 LASCR Optocoupler

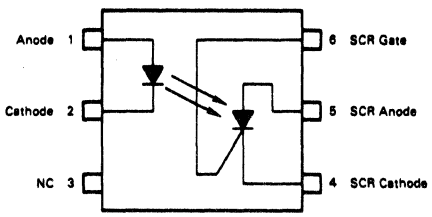

CE33 Optically Isolated AC Line Monitor

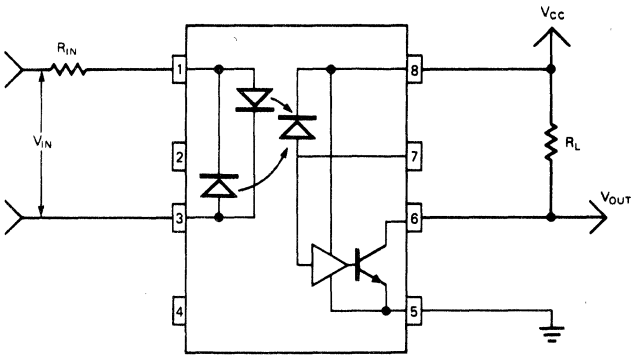

48. SCHEMATIC DRAWINGS

CE34 Optical Switch Isolator

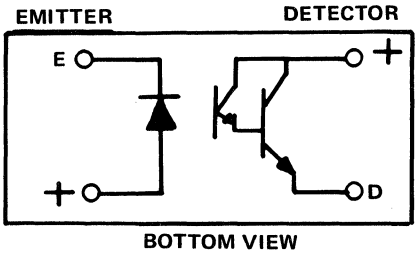

CE35 Photocoupler W/Schmitt Trigger

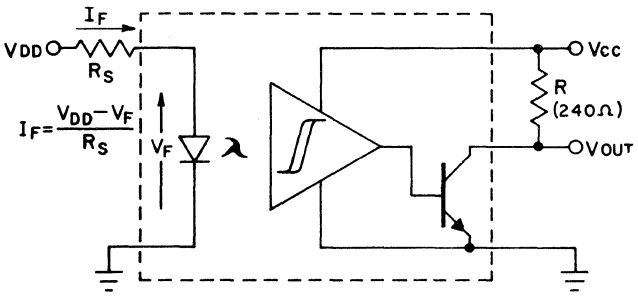

CE37 High Speed Optocoupler

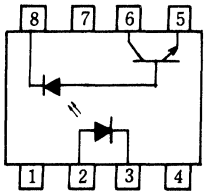

CE38 Low Input Current Logic Gate Optocoupler

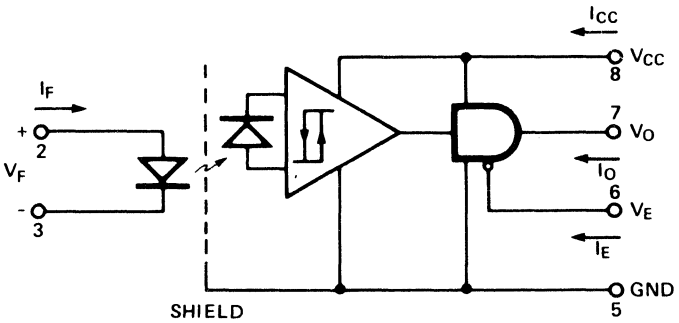

TRUTH TABLE
(Positive Logic)

Input	Enable	Output
H	H	Z
L	H	Z
H	L	H
L	L	L

CE39 High Speed Optocoupler

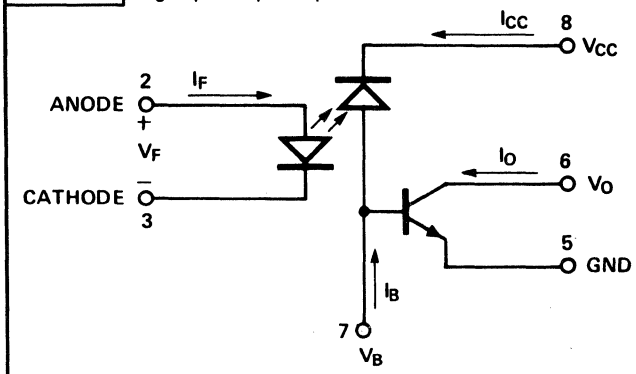

CE40 Dual Optocoupler

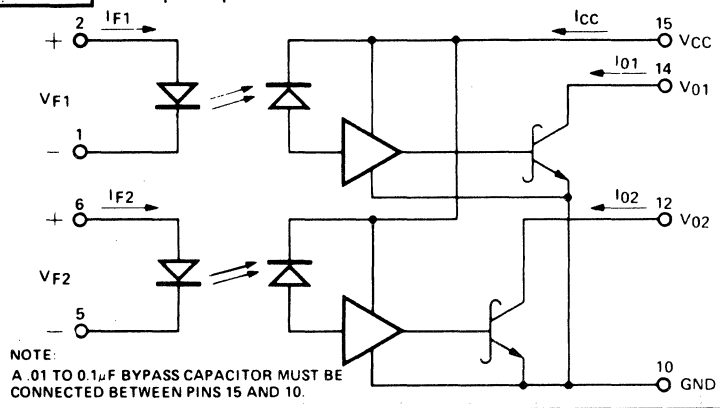

NOTE:
A .01 TO 0.1μF BYPASS CAPACITOR MUST BE CONNECTED BETWEEN PINS 15 AND 10.

48. SCHEMATIC DRAWINGS

CE41 High CMR Optocoupler

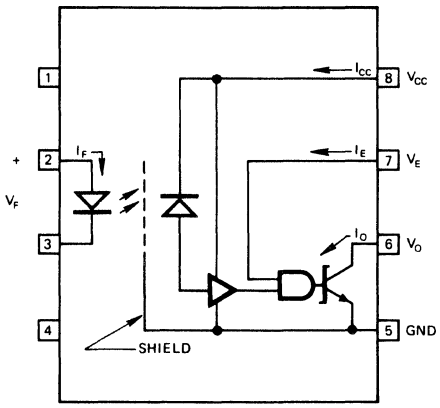

CE42 Light Sensor W/Schmitt Trigger Output

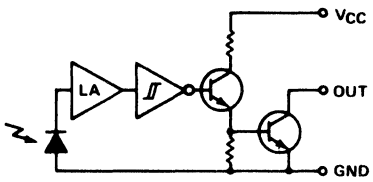

CE43 Light Sensor W/Totem-Pole Output

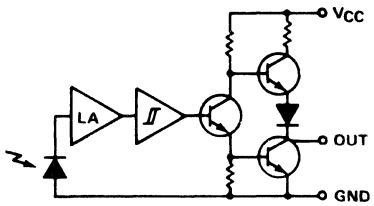

CE44 Light Sensor W/Open-Collector Output

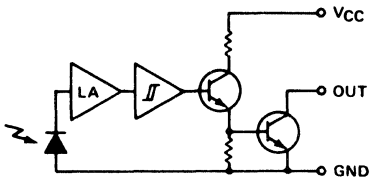

CE45 Opto Switch W/Totem-Pole Output

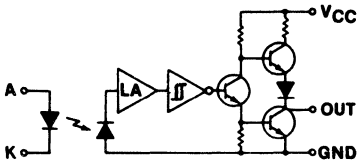

CE47 Opto Switch W/Totem-Pole Output

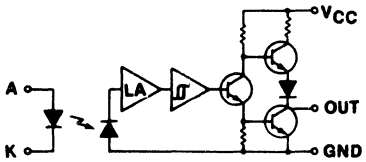

CE48 Photo Switch/Gap Detector

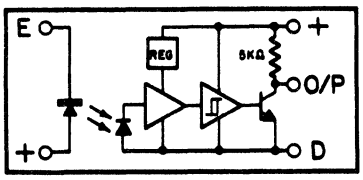

CE49 Opto Isolater W/Schmitt Trigger Output

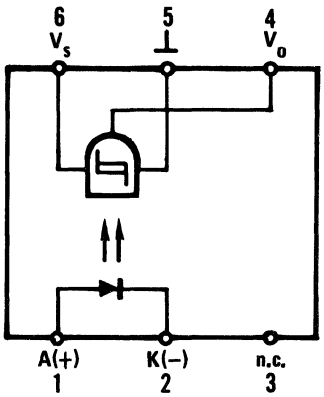

CE50 Low Input Current High Speed Optocoupler

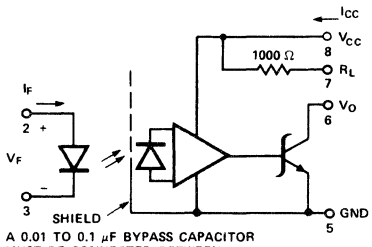

A 0.01 TO 0.1 μF BYPASS CAPACITOR MUST BE CONNECTED BETWEEN PINS 8 AND 5. (SEE NOTE 1).

TRUTH TABLE (POSITIVE LOGIC)

INPUT	OUTPUT
H	L
L	H

CE3 Dual High Speed Optocoupler

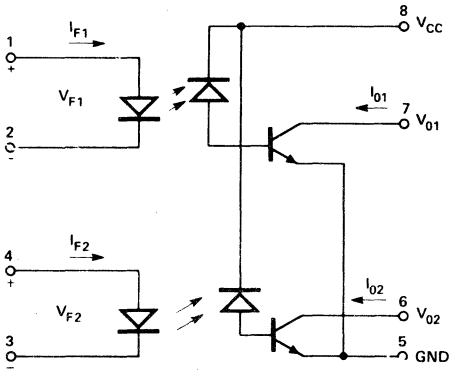

48. SCHEMATIC DRAWINGS

CE51 Optically-Coupled 20 mA Current Loop Transmitter

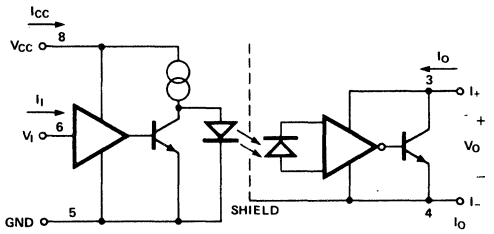

TRUTH TABLE
(POSITIVE LOGIC)*

V_I	V_{CC}	I_O
H	ON	H
L	ON	L
H	OFF	H
L	OFF	H

*CURRENT LOOP CONVENTION – H = MARK: $I_O \geq 12$ mA, L = SPACE: $I_O \leq 2$ mA.

CE52 Optically-Coupled 20 mA Current Loop Receiver

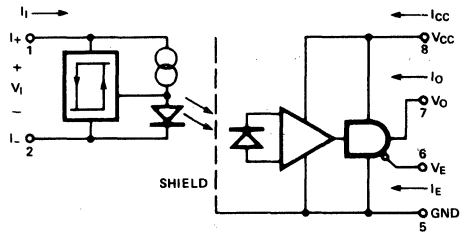

TRUTH TABLE
(POSITIVE LOGIC)*

I_I	V_E	V_O
H	H	Z
L	H	Z
H	L	H
L	L	L

*CURRENT LOOP CONVENTION – H = MARK: $I_I \geq 12$ mA, L = SPACE: $I_I \leq 3$ mA, Z = OFF (HIGH IMPEDANCE) STATE.

CE53 NAND Photocoupler

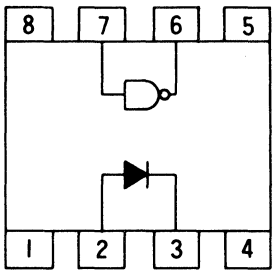

1. NC
2. Anode (LED)
3. Cathode (LED)
4. NC
5. GND (Output IC)
6. Vout (Output IC)
7. V_E (Output IC)
8. V_{CC} (Output IC)

CE54 CMOS/TTL Compatible Opto-Coupler

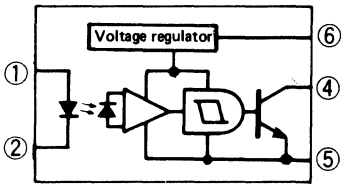

CE56 Optotransformer

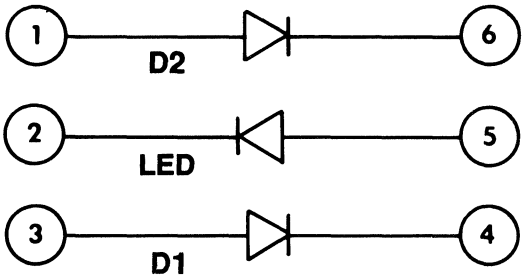

CE57 Optotransformer

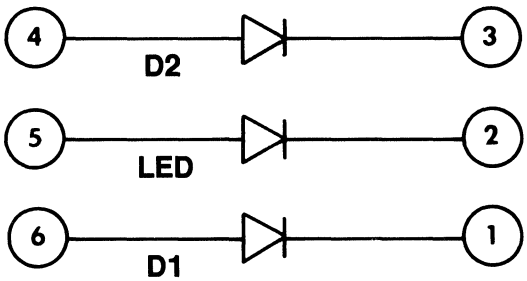

CE5 Optocoupler W/Split Darlington Output

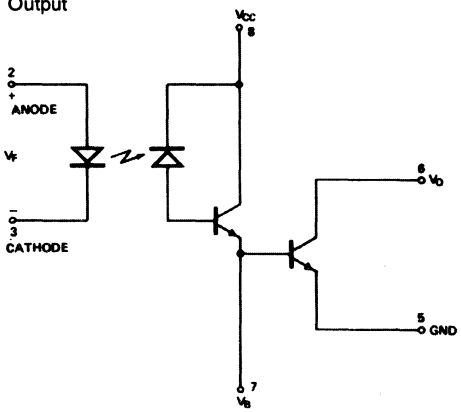

48. SCHEMATIC DRAWINGS

CE60 Photocoupler w/Integrated Diode/Output Transistor

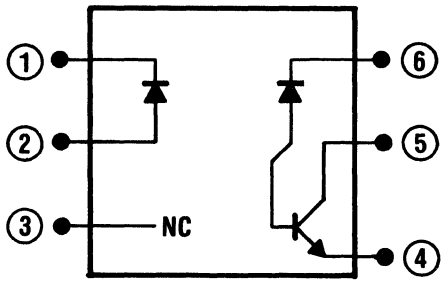

Top View

CE62 High Gain Optocoupler

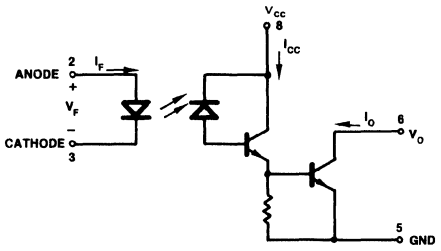

CE61 Dual Channel Line Receiver Optocoupler

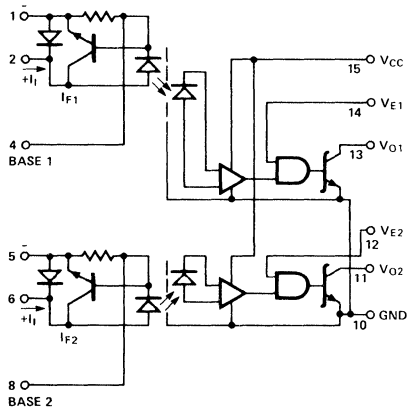

TRUTH TABLE
(Positive Logic)

Input	Enable	Output
H	H	L
L	H	H
H	L	H
L	L	H

48. SCHEMATIC DRAWINGS

E Section Numbers are explained as follows:
see type no for outline drawing number. ± to be counted as 1 digit.

IDENTIFYING NUMBER

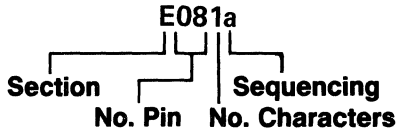

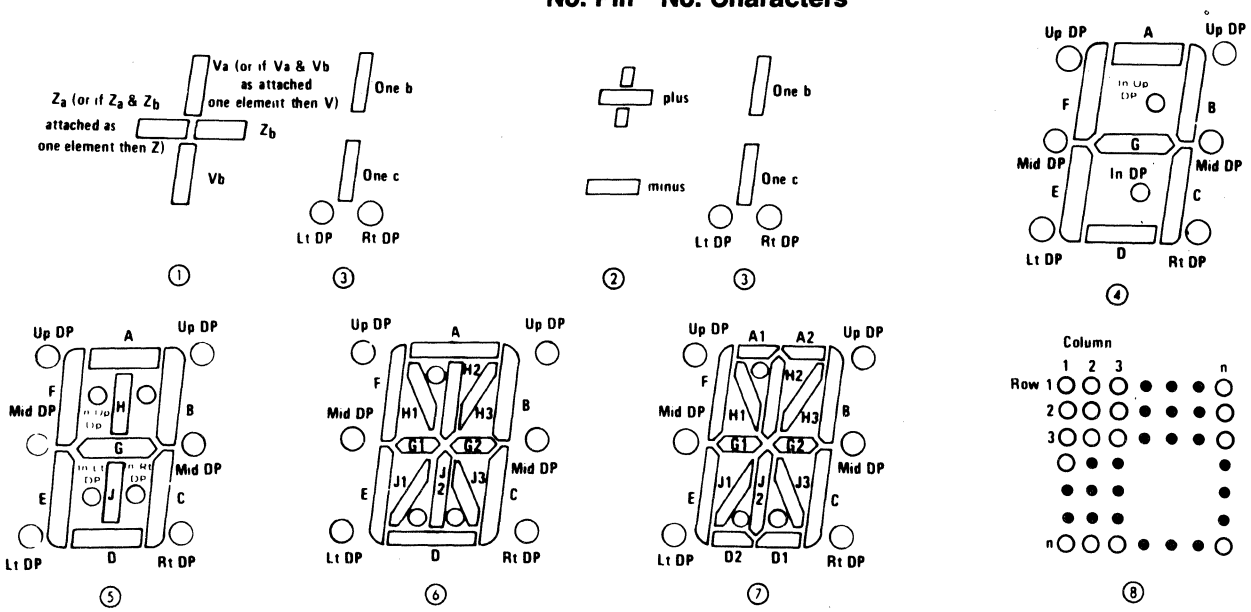

Glossary of Symbols & Abbreviations

A	- Anode	Con	- Connected	L Sen	- Light Sensor
Al	- Alarm	dec	- Decimal	LED	- Light Emitting Diode
An	- Anode	Dgr	- Degree	Lft	- Left
An Am In	- Anode AM Indicator	dig	- Digit	NC	- No Connection
An Al In	- Anode Alarm Indicator	Dig Com An	- Digit Common Anode	Opt	- Optional
An Cln	- Anode Colon	Dig Com Ka	- Digit Common Cathode	Out	- Output
An PM In	- Anode PM Indicator	DP	- Decimal Point	Rpl	- Ripple
BCD	- Binary Coded Decimal	ex	- Except	Rt	- Right
Blkng	- Blanking	ex dec	- Except Decimal	Seg	- Segment
Ca	- Cathode	Gnd	- Ground	Sel	- Select
Cln	- Colon	In	- Indicator, Input or Internal	Sen	- Sensor
Com	- Common	Int Con	- Internally Connected	V	- Volts
Com An	- Common Anode	KA	- Cathode	VCC	- Supply Voltage
Com Ka	- Common Cathode	KA PM In	- Cathode PM Indicator	WR	- Write
Com An Cln	- Common Anode Colon	KA AL In	- Cathode Alarm Indicator	( )	- Number of Digits
Com Ka Cln	- Common Cathode Colon	L	- Light	[ ]	- Mfrs. Lettering

48. SCHEMATIC DRAWINGS

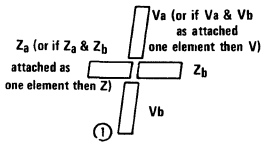

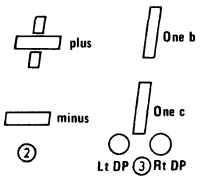

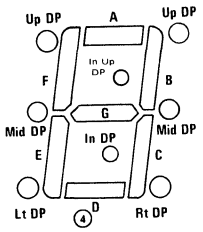

E061

Pin	a	b
1	Ka Va	An Va
2	Ka Z	An Z
3	An Com	Ka Com
4	Ka Vb	An Vb
5	Ka Z	An Z
6	An Com	Ka Com

E081

Pin	a ●	b ●	c ②③	d ●	e ②
1	In 2	In 2	Plus	In 1	NC
2	In 4	In 4	One b One c [Num 1]	VDP	ND
3	In 8	In 8	One b One c [Num 1]	VLED	Plus
4	DP	Blankingcon	DP	In 8	NC
5	Latch E	Latch E	Open	In 4	NC
6	GND	GND	Open	GNd	GND
7	VCC	VCC	VCC	VCC	Minus/Plus
8	In 1	In 1	Minus/Plus	In 2	NC

E092

Pin	a
1	Ka G
2	No. Pin
3	Ka A
4	Ka F
5	Com An (2)
6	Ka D
7	Ka E
8	Ka C
9	Ka B

E101

Pin	a ④	b ④	c ④	d ④	e ④	f ①③	g ①③
1	Ka Com	An A	An E	Ka A	Ka E	An One b [A]	Kg One b [A]
2	An F	An F	An D	Ka F	Ka D	An One b [A]	Ka One b [A]
3	An G	An E	An C	Ka E	Ka C	An One b [A]	Ka One b [A]
4	An E	An D	An Rt DP	Ka D	Ka Rt DP	An One b [A]	Ka One b [A]
5	An D	Ka Com	Ka Com	An Com	An Com	Ka Com	An Com
6	Ka Com	An C	An B	Ka C	Ka B	An Rt DP	Ka Ctr DP
7	An DP	Art DP	An A	Ka Rt DP	Ka A	An Z [C]	Ka Z [C]
8	An C	An G	An G	Ka G	Ka G	An One [B]	Ka One [B]
9	An B	An B	An F	Ka B	Ka F	An One [B]	Ka One C [B]
10	An A	Ka Com	Ka Com	An Com	An Com	Ka Com	An Com

E101

Pin	h ①	i ①	j ④	k ④	m ④	n ④	o ②③	p ④	q ④
1	An Vb [C]	Ka Vb [C]	Seg E	Seg E	Seg E	Seg E	Ka	Ka Com	An Com
2	An Vb [C]	Ka Vb [C]	Seg D	Seg D	Seg D	Seg D	An plus	Seg F	Seg F
3	An Za [B]	Ka Za [B]	An	Ka	Seg C	Seg C	An minus	Seg G	Seg G
4	An Za [B]	Ka Za [B]	Seg C	Seg C	DP	DP		Seg E	Seg E
5	Ka Com	An Com	DP	DP	Com An	Com Ka		Seg D	Seg D
6	An Va [A]	Ka Va [A]	Seg B	Seg B	Com An	Com Ka	Ka	Ka Com	An Com
7	An Va [A]	Ka Va [A]	Seg A	Seg A	Seg B	Seg B	DP	Rt DP	Ka Rt DP
8	An Zb [D]	Ka Zb [D]	An	Ka	Seg A	Seg A	An One c [C]	Seg C	Seg C
9	An Zb [D]	Ka Zb [D]	Seg F	Seg F	Seg G	Seg G	An One b [B]	Seg B	Seg B
10	Ka Com	An Com	Seg G	Seg G	Seg F	Seg F		Seg A	Seg A

NOTE: – "●" INDICATES DRAWING NOT SHOWN.

Continued on next page

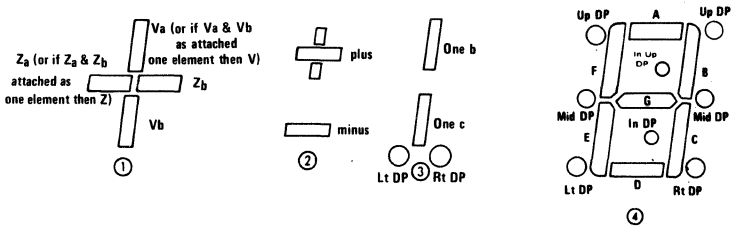

E101

Pin	r ②③	s ②③	t ④	u ④
1	Minus	Minus	Ka E	An E
2	Ka ±	An ±	Ka D	An D
3	Seg One c [C]	Seg One c [C]	An Com	Ka Com
4	Ka 1/DP	An 1/DP	Ka C	An C
5	Rt DP	Rt DP	Ka DP	An DP
6	Seg One b [B]	Seg One b [B]	Ka B	An B
7	Ka 1/DP	An 1/DP	Ka A	An A
8	Ka ±	An ±	An Com	Ka Com
9	Plus	Plus	Ka F	An F
10	NC	NC	Ka G	An G

E101

Pin	z ①	aa ②③	ab ①③	ac ①③	ad ①③	ae ①③	af ③	ag ①	ah ④
1	Ka Vb [E]	Ka minus	Ka Vb [J]	An Vb [J]	Ka Z [C]	An Z [C]	An Com	Ka Com	An E
2	NC	NC	NC	NC	Ka Vb [E]	An Vb [E]	Ka Va [F]	An Va [F]	An D
3	Ka One c [C]	An Com	An Com	Ka Com	Ka One c [B]	An One c [B]	Ka Z [G]	An Z [G]	Com Ka
4	Ka DP	Ka One c [C]	Ka One c [C]	An One c [C]	Ka DP	An DP	Ka Vb [E]	An Vb [E]	An C
5	An Com	Ka DP	Ka Rt DP	An Rt DP	An Com	Ka Com	NC	NC	An DP
6	Ka One b [B]	Ka One b [B]	Ka One b [B]	An One b [B]	An Com	Ka Com	An Com	Ka Com	An B
7	NC	NC	NC	NC	Ka One b [A]	An One b [A]	Ka DP [H]	An DP [H]	An A
8	Ka Z [G]	An Com	An Com	Ka Com	An Va [D]	Ka Va [D]	Ka One c [C]	An One c [C]	Com Ka
9	Ka Va [F]	Ka plus	Ka Va [H]	An Va [H]	Ka Va [D]	An Va [D]	Ka One b [B]	An One b [B]	An F
10	An Com	NC	Ka Z [G]	An Z [G]	An Com	Ka Com	NC	NC	An G

E101

Pin	ai ②③	aj ②③	ak ④	al ④	am ①③	an ①③
1	Ka Plus	An Plus	Seg E	Seg E	Ka Vb [du]	An Vb [du]
2	An Plus, Minus	Ka Plus, Minus	Seg D	Seg D	Ka Zb [C]	An Zb [C]
3	Ka One C [b]	An One C [b]	Com An	Com Ka	Ka One C [b]	An One C [b]
4	An One b, C [a, b] D.P.	Ka One b, C [a, b] D.P.	Seg C	Seg C	Com An One b, C [a, b] D.P.	Com Ka One b, c [a, b] D.P.
5	Ka D.P.	An D.P.	D.P.	D.P.	Ka D.P.	An D.P.
6	Ka One b [a]	An One b [a]	Seg B	Seg B	Ka One b [a]	An One b [a]
7	An One b, C [a, b] D.P.	Ka One b, c [a, b] D.P.	Seg A	Seg A	Com An One b, c [a, b] D.P.	Com Ka One b, c [a, b] D.P.
8	An Plus, Minus	Ka Plus, Minus	Com An	Com Ka	Ka Va [do]	An Va [do]
9	Ka Minus	An Minus	Seg G	Seg G	Com An Va [Ado]	Com Ka Va [Aob]
10	No Pin	No Pin	Seg F	Seg F	Com An Vb, Zb [Ac, du]	Com Ka Vb, Zb [Ac, du]

Continued on next page

48. SCHEMATIC DRAWINGS

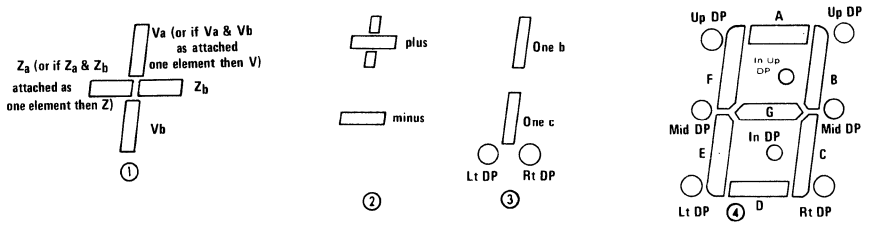

E101

Pin	ao ④	ap ④	aq ①③	ar ①③	as ②③
1	Ka G	An G	Ka Va [do]	An Va [do]	An Minus
2	Ka F	An F	Com An Va [Ado]	Com Ka Va [Ado]	NC
3	Com An	Com Ka	Ka Zb [c]	An Zb [c]	Com Ka
4	Ka E	An E	Ka Vb [du]	An Vb [du]	An Onec [C]
5	Ka D	An D	Com An Zb, Vb [Acdu]	Com Ka Zb, Vb [Kcdu]	An D.P.
6	Ka D.P.	An D.P.	Ka D.P.	An D.P.	An One b [B]
7	Ka C	An C	Ka One c [b]	An One c [h]	NC
8	Com An	Com Ka	Com An One bc [AabD.P.]	Com Ka One b, c [Aab] D.P.	Com Ka
9	Ka B	An B	Ka One b [a]	An One b [a]	An Plus
10	Ka A	An A	Com An One b, c [Aab D.P.]	Com Ka One b, c [Aab] D.P.	NC

E101

Pin	at ④	au ④	av ④	aw ④	ax ②③	ay ②③	aZ ④	ba●	bb●	bc●
1	Seg E	Seg E	Seg A	Seg A	Ka Minus	An Minus	An E	Ka E	An EJ	Ka EJ
2	Seg D	Seg D	Seg F	Seg F	Ka Minus	An Minus	Com Ka	Ka I	An D	Ka D
3	Seg C	Seg C	Seg E	Seg E	Ka Minus	An Minus	An C	Ka D	Com Ka	Com An
4	Dp Ka	Dp An	Seg D	Seg D	Ka Minus	An Minus	An Rt DP	Ka C	An C	Ka C
5	Com An	Com Ka	Com Ka	Com An	Com An	Com Ka	An B	Ka G	An DP	Ka DP
6	Seg B	Seg B	Seg C	Seg C	Dp Ka	Dp An	An A	Ka B	An B	Ka B
7	Seg A	Seg A	Dp An	Dp Ka	Ka One c [C]	An One c [C]	Com Ka	Ka H	An A	Ka A
8	Seg G	Seg G	Seg G	Seg G	Ka One b [B]	An One b [B]	An F	Ka A	Com Ka	Com An
9	Seg F	Seg F	Seg B	Seg B	Ka One b [B]	An One b [B]	An G	Ka F	An FH	Ka FH
10	Com An	Com Ka	Com Ka	Com An	Com An	Com Ka		Com An	An G	Ka G

E101

Pin	bd①③	be ④	bf ④	bg ⑤	bh ⑤	bi ②③	bj ②③	bk	bl
1	An Com	Ka Up DP	An Up DP	Ka J	An J	Ka minus	Com Ka		
2	Ka Plus	Ka F	An F	NC	NC	NC	An Plus		
3	Ka Minus	Ka G	An G	An Com	Ka Com	An Com	An Minus		
4	NC	Ka E	An E	Ka C	An C	Ka C	Com Ka		
5	NC	Ka D	An D	Ka DP	An DP	Ka DP	NC		
6	An Com	Com An	Com Ka	Ka B	An B	Ka B	Com Ka		
7	Ka DP	Ka Rt DP	An Rt DP	NC	NC	NC	An Rt DP		
8	Ka One C	Ka C	An C	An Com	Ka Com	An Com	An C		
9	Ka One B	Ka B	An B	Ka H	An H	Ka Plus	An B		
10	NC	Ka A	An A	Ka G	An G	NC	Com Ka		

Continued on next page

48. SCHEMATIC DRAWINGS

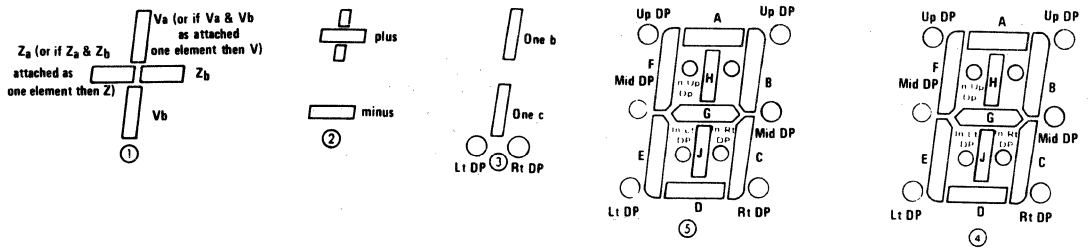

E101

Pin	bm ④	bn ④	bo ④	bp ①	bq ①	br ②③	bs ②③	bt ②③
1	Ka E	An E	Ka E	Ka Minus	An Minus	An Com	Ka C	An C
2	Ka D	An D	Ka D	An Pl/Min	Ka Pl/Min	Ka Plus	An c,d	Ka c,d
3	Com An	An C	Ka C	Ka One C (C)	An One C (C)	Ka Minus	Ka b	An b
4	Ka C	An D.P.	Ka D.P.	An One B/C/DP	Ka One B/C/DP	NC	An a,b, DP	Ka a,b, DP
5	Ka Rt DP	Com Ka	Com An	Ka D.P.	An D.P.	NC	Ka DP	An DP
6	Ka B	Com Ka	Com An	Ka One B (B)	An One B (B)	An Com	Ka a	An a
7	Ka A	An B	Ka B	An One B/C/D.P.	Ka One B/C/D.P.	Ka DP	An a,b, DP	Ka a,b DP
8	Com An	An A	Ka A	An Pl/Min	Ka Pl/Min	Ka c	An c,d	Ka c,d
9	Ka C	An G	Ka G	Ka Plus	An Plus	Ka b	Ka d	An d
10	Ka G	An F	Ka F	NC	NC	NC	No Pin	No Pin

E101

Pin	bu ②③	bv ②③
1	Ka Com	An C
2	An Plus	Ka c,d
3	An Minus	An b
4	NC	Ka a,b, DP
5	NC	An DP
6	Ka Com	An a
7	An DP	Ka a,b, DP
8	An c	Ka c,d
9	An b	An d
10	NC	No Pin

E102

Pin	a ④	b ④	c ②④	d ④
1	An G	Ka G	Ka G/K Minus	An G/A Minus
2	No Pin	No Pin	An 1/A Plus/Min	Ka 1/K Plus/Min
3	An A	Ka A	Ka E/K Plus	An EA Plus
4	An F	Ka F	Ka D	An D
5	Ka Com (2)	An Com (2)	An 2	Ka 2
6	An D	Ka D	Ka Lft D.P.	An Lft D.P.
7	An E	Ka E	Ka C	An C
8	An C	Ka C	Ka B	An B
9	An B	Ka B	Ka A	An A
10	Ka Com (1)	An Com (1)	Ka F	An F

E102

Pin	e ④	f ④	g ④	h ④	i ④⑤	j ④⑤
1	Ka G	An G	An D	Ka D	Ka D	An D
2	An 1	Ka 1	An DP	Ka D.P.	Ka D.P.	An D.P.
3	Ka E	An E	An E	Ka E	Ka Vb	An Vb
4	Ka D	An D	An C	Ka C	Ka C	An C
5	An 2	Ka 2	Com Ka 2	Com An 2	Com An 2	Com Ka 2
6	An Rt D.P.	An B	An B	Ka B	Ka B	An B
7	Ka C	An C	An A	Ka A	Ka A	An A
8	Ka B	An B	An F	Ka F	Ka Va	An Va
9	Ka A	An A	An G	Ka G	Ka G	An G
10	Ka F	An F	Com Ka 1	Com An 1	Com An 1	Com Ka 1

48. SCHEMATIC DRAWINGS

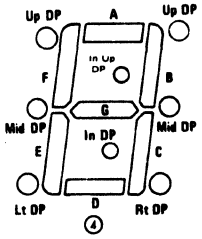

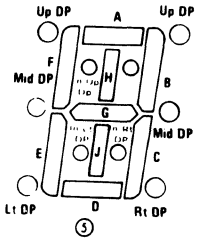

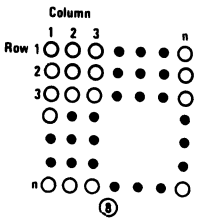

E112

Pin	a ④	b ④	c ④	d ④
1	An (1)	NC	Com Ka (1)	NC
2	Ka DP (1)	Ka (2)	NC	Ka Dig 2
3	Ka A	An E	An E	An E Dig 2/3
4	Ka F	An C	An C	An C Dig 2/3
5	Ka B	An D	An D	An D Dig 2/3
6	Ka D	NC	NC	An D.P.
7	Ka C	Ka (3)	Com Ka (3)	Ka Dig 3
8	Ka E	An G	An G	An G Dig 2/3
9	Ka G	An F	An F	An F Dig 2/3
10	An (2)	An B	An B	An B Dig 2/3
11	Ka DP (2)	An A	An A	An A Dig 2/3

E113

Pin	a ④
1	Ka (1)
2	Ka (2)
3	An E
4	An C
5	An D
6	An DP
7	Ka (3)
8	An G
9	An F
10	An B
11	An A

E121

Pin	a ④	b ⑧	c ⑧	d ⑧
1	An G	Ka Row 1	Ka Col 1	An Col 1
2	An F	Ka Row 2	An Row 3	Ka Row 3
3	Ka Com	An Col 2	Ka Col 2	An Col 2
4	An E	An Col 1	An Row 5	Ka Row 5
5		Ka Row 6	An Row 6	Ka Row 6
6	An D	Ka Row 7	An Row 7	Ka Row 7
7		An Col 3	Ka Col 4	An Col 4
8	An Rt DP	Ka Row 5	Ka Col 5	An Col 5
9	An C	An Col 4	An Row 4	Ka Row 4
10	An B	Ka Row 4	Ka Col 3	An Col 3
11		Ka Row 3	An Row 2	Ka Row 2
12	An A	An Col 5	An Row 1	Ka Row 1

E122

Pin	a ④
1	NC
2	An E
3	An D
4	NC
5	An C
6	An DP
7	Ka (2)
8	An B
9	An G
10	An A
11	An F
12	Ka (1)

E123

Pin	a ⑤	b ④	c ④	d ④
1	Ka (1)	NC	Ka (1)	Ka E
2	An E [2]	An E	An E	Ka D
3	An G [8]	An D	An D	Ka DP
4	An D [9]	Ka (2)	Ka (2)	Ka C
5	An C [6]	An C	An C	Ka G
6	An J [4]	An DP	An DP	NP
7	Ka (2)	Ka (3)	Ka (3)	Ka B
8	An B [5]	An B	An B	An (3)
9	An A [7]	An G	An G	An (2)
10	Ka (3)	An A	An A	Ka (F)
11	An F [1]	An F	An F	Ka A
12	An H [3]	NC	NC	An (1)

E123

Pin	e ④	f ④	g ④
1	An E	Ka B	An B
2	An D	An Com (3)	Ka Com (3)
3	An DP	An Com (2)	Ka Com (2)
4	An C	Ka F	An F
5	An G	Ka A	An A
6	NP	An Com (1)	Ka Com (1)
7	An B	Ka E	An E
8	Ka 3	Ka D	An D
9	Ka 2	Ka DP	An DP
10	An F	Ka C	An C
11	An A	Ka G	An G
12	Ka (1)	NC	NC

E124

Pin	a ④	b ④	c ④	d ④	e ④	f ④	g ●
1	NC	NC	Ka (1)	Ka (1)	Ka (1)	Ka (1)	Gnd
2	An E	An E	An E	An E	An E	An E	DO Data In
3	An C	An C	An C	An C	An C	An C	DI Data In
4	Ka (3)	Ka (3)	Ka (3)	Ka (3)	Ka (3)	Ka (3)	D2 Data In
5	An In DP	An Rt DP	An In DP	An Rt DP	An In DP	An Rt DP	D3 Data In
6	Ka (4)	Ka (4)	NC	NC	Ka (4)	Ka (4)	D6 Data In
7	An G	An G	An G	An G	An G	An G	D5 Data In
8	An D	An D	An D	An D	An D	An D	D4 Data In
9	An F	An F	An F	An F	An F	An F	WR Write
10	Ka (2)	Ka (2)	Ka (2)	Ka (2)	Ka (2)	Ka (2)	A1 Dig Sel
11	An B	An B	An B	An B	An B	An B	A0 Dig Sel
12	An A	An A	An A	An A	An A	An A	VCC

Continued on next page

48. SCHEMATIC DRAWINGS

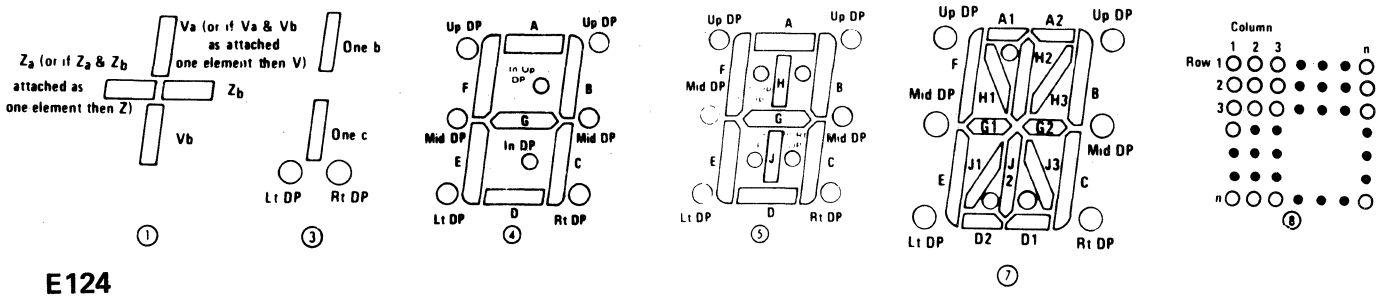

①　③　④　⑤　⑦　⑧

E124

Pin	h ⑤	i ⑤	j ⑧	k ●	l ④	m ⑦
1	An D	Ka D	Col 1	Ka 1	Ka B Dig 1-4	D5 Data In
2	An G	Ka G	Col 2	Ka 2	Ka G Dig 1-4	D4 Data In
3	Ka Com (4)	An Com (4)	Col 3	Ka 3	Ka D Dig 1-4	WR Write
4	Ka Com (3)	An Com (3)	Col 4	Ka 4	NC	AI Addr In
5	An B	Ka B	Col 5	An DP	An Dig 1	A0 Addr In
6	An C	Ka C	Int Con	An F	An Dig 2	VCC
7	An H	Ka H	Dout	An G	An Dig 3	GND
8	An E	Ka E	VB	An A	An Dig 4	D0 Data In
9	An F	Ka F	Vcc	An B	Ka C Dig 1-4	D1 Data In
10	Ka Com (2)	An Com (2)	CLK	An C	Ka E Dig 1-4	D2 Data In
11	Ka Com (1)	An Com (1)	Gnd	An D	KA F Dig 1-4	D3 Data In
12	An A	Ka A	Din	An E	Ka A Dig 1-4	D6 Data In

E135

Pin	a ④
1	An F
2	Ka (1)
3	An G
4	An E
5	Ka (2)
6	An D
7	Ka (3)
8	An DP
9	An C
10	An B
11	Ka (4)
12	Ka (5)
13	An A

E141

Pin	a ⑧	b[1] ①③	c[2] ④	d ⑧	e ④	f ①③	g[3] ④
1	Col 2	Va [H] An Z [G] An	Ka A	Col 2		An Va [H]	Ka A
2	Row 1		Ka F	Row 1	K dig/der		Ka F
3	Row 3		An dig/dec	Row 3	An F	Ka Va [H]	An Com
4	Row 4	Va [H] K Vb [J] An		Row 4	An G	Ka Z [C]	NC
5	Col 1			Col 1	An E	Ka Vb [J]	NC
6			Ka Left dec	Int Con	An D	An Vb [J]	D.P. Ka
7	dec A	Vb [J] Ka	Ka E	dec A		An Z [G]	Ka E
8	Col 3	Z [G] Ka	Ka D	Col 3		An DP	Ka D
9	Row 7/dec K	Ka [dec]	Ka Rt dec	Row 7/dec K	K dig/dec		An Com
10	Row 6	One c [C] Ka	Ka C	Row 6	A dec	Ka DP	Ka C
11	Row 5	One b [B] Ka One c [C]	Ka G	Row 5	An C	Ka One c [C]	Ka G
12	Row 2			Row 2	An B	Ka One b [B]	NC
13	Col 5		Ka B	Col 5	An A	An One b [B]	Ka B
14	Col 4	One b [B] An A [dec]	An dig/dec	Col 4		An One c [C]	An Com

E141

Pin	h ①③	i ④	j ④	k ④	m[3] ④	n[4] ④	o[5] ④	p[3] ④	q[6] ④
1	An Com VZ [C, D]	An F	An F	An A	Ka A	Ka A	An F	Ka A	An A
2		An G	An G	An F	Ka F	Ka F	An G	Ka F	An F
3		NC	An E	Ka	Com An	Com An	No Pin	Com An	Com Ka
4		Com Ka	DP Ka	No Pin	No Pin	No Pin	Com Ka	Ka E	An E
5		NC	NC	No Pin	No Pin	No Pin	No Pin	No Pin	No Pin
6		An E	DP An	No Con	Ka DP	NC	An E	Ka DP	An DP
7	Ka V [D]	An D	An D	An E	Ka E	Ka E	An D	No Pin	No Pin
8	Ka Z [C]	An C	An C	An D	Ka D	Ka D	An C	Ka D	An D
9		NC	NC	An DP	NC	Ka DP	An DP	Com An	Com Ka
10	Ka One c [B]	NC	NC	An C	Ka C	Ka C	No Pin	Ka C	An C
11	Ka One b [A]	Com Ka	NC	An G	Ka G	Ka G	No Pin	Ka G	An G
12			Com Ka (ex dec)	No Pin	No Pin	No Pin	Com Ca	Ka B	An B
13		An B	An B	An B	Ka B	Ka B	An B	No Pin	No Pin
14	An Com One b, One c [AB]	An A	An A	Ka	Com An	Com An	An A	Com An	Com Ka

Continued on next page

48. SCHEMATIC DRAWINGS

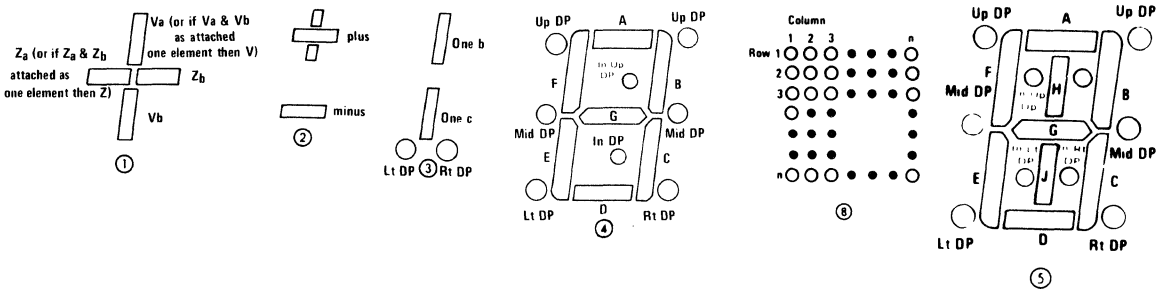

E141

Pin	r[4] ④	s[7] ④	t[8] ④	u[7] ④	v[8] ④	x[3] ④	y[9] ⑤	z[3] ④	aa ④	ab ④	ac ②③
1	Ka A	Ka A	Ka A	An A	An A	Ka A	Ka A	Ka A	Ka A	Ka A	An Plus
2	Ka F	Ka F	Ka F	An F	An F	Ka F	Ka F	Ka F	Ka F	NC	NC
3	Com An	An	An	Ka Com	Ka Com	NC	Ka J	NC	An Com	Ka F	NC
4	No Pin					NC	NC	NC	NC	Ka G	NC
5	No Pin					NC	NC	NC	NC	NC	NC
6	Ka DP	An	An	Ka Com	Ka Com	Ka DP	Ka H	NC	DP Ka	Ka E	NC
7	Ka E	Ka E	Ka E	An E	An E	Ka E	Ka E	Ka E	Ka E	Com An	Ka Plus
8	Ka D	Ka D	Ka D	An D	An D	Ka D	Ka D	Ka D	Ka D	Ka D	Ka Minus
9	NC	Ka DP	Ka DP	An DP	An DP	NC	NC	NC	An Com	Ka C	NC
10	Ka C	Ka C	Ka C	An C	An C	Ka C	Ka C	Ka C	Ka C	NC	Ka One b [b]
11	Ka G	Ka G	Ka G	An G	An G	Ka G	Ka G	Ka G	Ka G	NC	Ka One c [a]
12						NC	NC	NC	NC	NC	NC
13	Ka B	Ka B	Ka B	An B	An B	Ka B	Ka B	Ka B	Ka B	Ka Rt DP	NC
14	Com An	An	An	Ka Com	Ka Com	Com An	Com An	Com An	An Com	Ka B	Com An—One b/c [a, b]

E141

Pin	ad ②	ae[10] ④	af[10] ④	ag[11] ①③	ah ①③	ai ①③	aj ①③
1	An Plus	Ka A	An A			An Va Vb (C, D]	Ka Va [D]
2	NC	Ka F	An F	Ka V [H, J]	An V [H, J]		
3	NC	Com An	Com Ka				
4	NC	Ka E	An E	Ka Z [G]	An Z [G]	Int Con Va Vb [An E, Ka D]	Ka Vb [E]/An Va [D]
5	NC	Com An	Com Ka	An	Ka		
6	NC	Ka DP	An DP				
7	Ka Plus					Ka Vb [E]	An Z [C], Vb [E]
8	Ka Minus	Ka D	An D			Ka Z [C]	Ka One c [B]
9	NC	Com An	Com Ka	Ka Rt DP	An Rt DP	Ka Left DP	
10		Ka C	An C	Ka One c [C]	An One c [C]	Ka One c [B]	
11		Ka G	An G			Ka One b [A]	An One b, One c [A, B]
12	NC	Ka B	An B				
13	NC			Ka One b [B]	An One b [B]		Ka One b [A]
14		Com An	Com Ka	An	Ka	An One c/b [A, B] DP	Ka One c [B]

Continued on next page

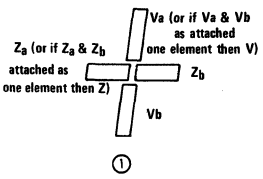

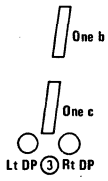

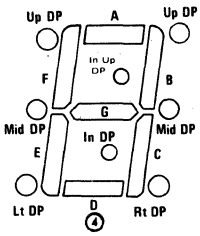

E141

Pin	ao ④	ap ④	aq ①③	ar ④	as ①③	at ①③	ak ①③	am ④	an ④
1	An A	Ka A		Ka A	An Va [D]		An Va [D]	Ka A	Ka A
2	An F	Ka F	Ka Va [A]	Ka F	No Pin	Ka Va Vb [A, D]		Ka F	Ka F
3	Ka Com	An Com	An Com	An (3)	Ka Va [D]			An (3)	An Com
4			Ka Z [E]	No Pin	Ka Z [C]	Ka Z [E]	An Vb [E]/An Va [D]	No Pin	
5				No Pin	Ka Vb [E]	An Com		No Pin	
6	Ka Com		Ka Vb [D]	NC (5)	An Vb [E]			Ka DP	An Com
7	An E	Ka E		Ka E	An Z [C]		Ka Z [C], Vb [E]	Ka E	Ka E
8	An D	Ka D		Ka D	An rt DP		An One c [B]	Ka D	Ka D
9	An Rt DP	Ka Rt DP	Ka Rt DP	Ka Rt DP	No Pin	Ka Rt DP		NC (5)	Ka rt DP
10	An C	Ka C	Ka One c [13]	Ka C	Ka rt DP	Ka One c [C]		Ka C	Ka C
11	An G	Ka G		Ka G	Ka One c [B]		Ka One b, One c [A, B]	Ka G	Ka G
12				No Pin	Ka One b [A]			No Pin	
13	An B	An B		Ka B	An One b [A]	Ka One b [B]	An One b [A]	Ka B	Ka B
14	Ka Com	Ka Com	An Com	An (3)	Ka One c [B]	An Com	An One c [B]	An (3)	An Com

E141

Pin	au ①③	av ①③	aw ④	ax ④	ay ①③	az ①③	ba ①③
1			An A		Ka Va [D]	An VZ [C, D]	An VZ [C, D]
2	An Va Vb [A, D]	An Va [A]	An F	Ka Com	An Va [D]	No Pin	No Pin
3			Ka Com	An F	No Pin	An VZ [C, D]	An VZ [C, D]
4	An Z [E]	An Z [E]		An G	Ka Z [C]	No Pin	No Pin
5	Ka Com	Ka Com		An E	Ka Vb [E]	No Pin	No Pin
6		An Vb [D]		An D	An Vb [E]	No Pin	NC
7			An E		An Z [C]	Ka V [D]	Ka V [D]
8			An D		An Rt DP	Ka Z [C]	Ka Z [C]
9	An Rt DP	An Rt DP	An Rt DP	Ka Com	Ka Rt DP	NC	Ka rt DP
10	An One c [C]	An One c [C]	An C	An Rt DP	Ka One c [B]	Ka One c [B]	Ka One c [B]
11			An G	An C	Ka One b [A]	Ka One b [A]	Ka One b [A]
12				An B	No Pin	No Pin	No Pin
13	An One b [B]	An One b [B]	An B	An A	An One b [A]	No Pin	No Pin
14	Ka Com	Ka Com	Ka Com		Ka One c [B]	An One b One c [A, B]	An One c One b [A, B] & DP

Continued on next page

48. SCHEMATIC DRAWINGS

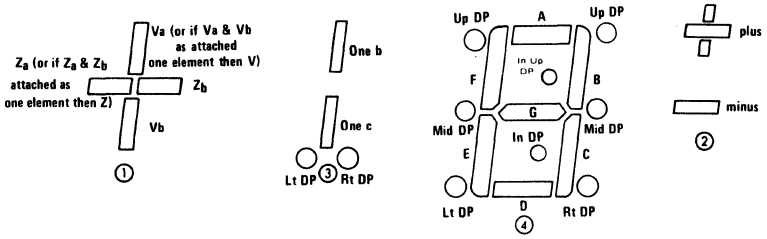

E141

Pin	bb ④	bc ②③	bd ①③	be ④	bf ①③	bg ④	bh ④	bi ①③
1	Ka A	Seg Va [D]	Seg Va [D]	Ka A	Ka Va [D]	Seg A	Seg A	Ka Va Vb [H, J]
2	Ka F	Seg Va [D]	Seg Va [D]	Ka F	An Va [D]	Seg F	Seg F	
3	An Com	Com An	Com Ka	An Com	No Pin	An Com	Ka Com	
4	Ka Rt DP	Ka Z [C]	An Z [C]	No Pin	Ka Z [C]	An Com	Ka Com	
5	NC	Com An	Com Ka	No Pin	Ka Vb [E]	An Com	Ka Com	
6	NC	Ka Vb [E]	An Vb [E]	Ka Lft DP	An Vb [E]	Seg E	Seg E	
7	Ka E	An Vb [E]	Ka Vb [E]	Ka E	An Z [C]	Seg D	Seg D	An Va, Vb, Z (H, J, G)
8	Ka D	Ka Rt DP	An Rt DP	Ka D	An DP	DP	DP	Ka One c [C]
9	An Com	Com An	Com Ka	NC	Ka DP	An Com	Ka Com	
10	Ka C	Ka One c [B]	An One c [B]	Ka C	Ka One c [B]	Seg C	Seg C	
11	Ka G	Com An	Com Ka	Ka G	Ka One b [A]	Seg G	Seg G	An One b, One c [B, C]
12	NC	Com An	Com Ka	No Pin	No Pin	An Com	Ka Com	
13	Ka B	Ka One b [A]	An One b [A]	Ka B	An One b [A]	Seg B	Seg B	Ka One b [B]
14	An Com	Com An	Com Ka	An Con	An One c [B]	An Com	Ka Com	Ka Z [G]

E141

Pin	bj ①③	bk ①③	bm ①③	bo ①③
1	An Va Vb [H, J]	Ka Va, Vb [H, J]	An Va, Vb [H, J]	
2				Ka Va, Vb [H, J]
3				
4				Ka Z [G]
5				An
6				Ka Va, Vb [H, J]
7	Ka Va, Vb, Z [H, J, G]	An Va, Vb, Z [H, J, G]	Ka Va, Vb, Z [H, J, G]	
8	An One c [C]	Ka One c [C]	An One c [C]	
9		Ka rt DP	An rt DP	Ka Rt DP
10				Ka One c [C]
11	Ka One b, One c [B, C]	An Com One b, One c [B, C]	Ka Com One b, One c [B, C]	
12				
13	An One b [B]	Ka One b [B]	An One b [B]	Ka One b [B]
14	An Z [G]	Ka Z [G]	An Z [G]	

Continued on next page

48. SCHEMATIC DRAWINGS

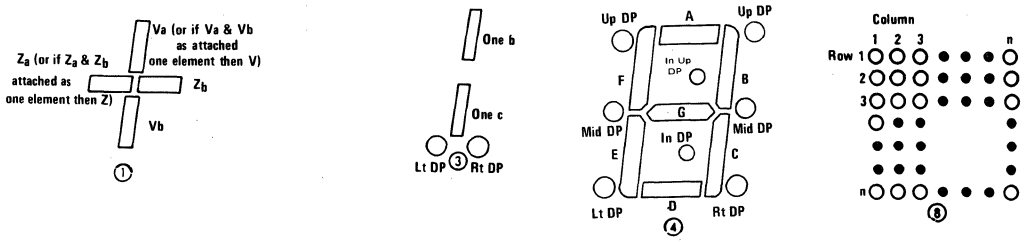

E141

Pin	bp ①③	bq ①③	br ①③	bs ⑧
1				Row 5
2	An Va, Vb [H, J]	Ka Va [H]	An Va [H]	Row 7
3				Col 2
4	An Z [G]	Ka Z [G]	An Z [G]	Col 3
5	Ka	An	Ka	Row 4
6	An Va, Vb [H, J]	Ka Vb [J]	An Vb [J]	Col 5
7				Row 6
8				Row 3
9	An Rt DP	Ka Rt DP	An Rt DP	Row 1
10	An One c [C]	Ka One c [C]	An One c [C]	Col 4
11				Col 3
12				Row 4
13	An One b [B]	Ka One b [B]	An One b [B]	Col 1
14				Row 2

E141

Pin	bt ①③	bx ④	by ④	bz ④	ca ④	cb ①③	cc ①③
1	An Va [D1]	Ka F	An A	An A	An A	An Va [H]	An Plus
2	No Pin	Ka G	An F	An F	An F	NC	NC
3	Ka Va [D1]	NC	Com Ka	Com Ka	Com Ka	Ka Va [H]	An Plus
4	Ka Z [C]	Com An	NC	NC	NC	Ka Za Zb [G]	NC
5	Ka Vb [D2]	NC	NC	NC	NC	Ka Vb [J]	NC
6	An Vb [D2]	Ka E	An LFt DP	NC	An LF DP	An Vb [J]	NC
7	An Z [C]	Ka D	An E	An E	An E	An Za Zb [G]	Ka Va Vb [H, J]
8	An DP	Ka C	An D	An D	An D	An Rt DP	Ka Minus
9	No Pin	Ka Rt DP	NC	An Rt DP	NC	NC	NC
10	Ka DP	NC	An C	An C	An C	Ka Rt DP	Ka One C [C]
11	Ka One c [B]	NC	An G	An G	An G	Ka One C [C]	Ka One b [B]
12	Ka One b [A]	Com An	NC	NC	NC	Ka One B [B]	NC
13	An One b [A]	Ka B	An B	An B	An B	An One b [B]	NC
14	An One c [B]	Ka A	Com Ka	Com Ka	Com Ka	An One C [C]	An One b, c [B, C]

Continued on next page

48. SCHEMATIC DRAWINGS

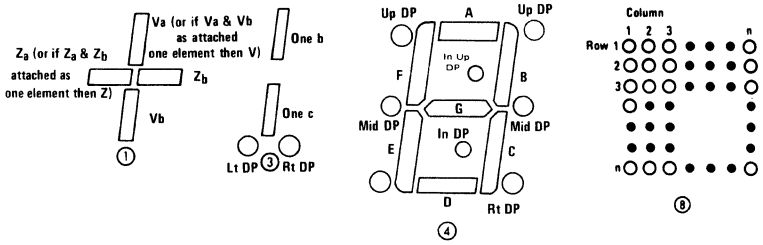

E141

Pin	cd ④	ce ④	cf ④	cg ④
1	NC	NC	Ka A	An A
2	Ka A	An A	Ka F	An F
3	Ka F	An F	Com An	Com Ka
4	Ka E	An E	NC	NC
5	Ka D	An D	NC	NC
6	An	Ka	Ka Lfe DP	An Lfe DP
7	NC	NC	Ka E	An E
8	NC	NC	Ka D	An D
9	Ka C	An C	Ka Rt DP	An Rt DP
10	Ka Rt DP	An Rt DP	Ka C	An C
11	Ka G	An G	Ka G	An G
12	Ka B	An B	NC	NC
13	An	Ka	Ka B	An B
14	NC	NC	Com An	Com Ka

E141

Pin	ch ⑧	ci ⑧	cj ⑧	ck ⑧	cl ⑧
1	Row 2	Col 5	An Col 2	Ka Row 5	An Row 5
2	Col 1	Col 7	Ka Row 1	Ka Row 7	An Row 7
3	Col 3	Row 2	Ka Row 3	An Col 2	Ka Col 2
4	Col 4	Row 3	Ka Row 4	An Col 3	Ka Col 3
5	Row 1	Col 4	An Col 1	Ka Row 4	An Row 4
6	NC	Row 5	NC	An Col 5	Ka Col 5
7	An DP	Col 6	An DP	Ka Row 6	An Row 6
8	Row 3	Col 3	An Col 3	Ka Row 3	An Row 3
9	Col 7	Col 1	Ka Row 7	Ka Row 1	An Row 1
10	Col 6	Row 4	Ka Row 6	An Col 4	Ka Col 4
11	Col 5	Row 3	Ka Row 5	An Col 3	Ka Col 3
12	Col 2	Col 4	Ka Row 2	Ka Row 4	An Row 4
13	Row 5	Row 1	An Col 5	An Col 1	Ka Col 1
14	Row 4	Col 2	An Col 4	Ka Row 2	Ka Row 2

E141

Pin	cm ①③	cn ④	co ④	cp ⑨	cq ⑧	cr ④
1	A Va Z	Ka F	An A	An Va Vb Z (G,H,J)	Ka Row 6	An Row 6
2	No Pin	Ka G	An F	No Pin	Ka Row 8	An Row 8
3	No Pin	No Pin	Com Ka	An Va Vb Z (GHJ)	An Col 2	Ka Col 2
4	Ka Va An Vb	An Com	No Pin	No Pin	An Col 3	Ka Col 3
5	No Pin	No Pin	No Pin	No Pin	Ka Row 5	An Row 5
6	No Pin	Ka E	NC	No Pin	An Col 5	Ka Col 5
7	Ka Vb	Ka D	An E	Ka Va Vb (HJ)	Ka Row 7	An Row 7
8	Ka Z	Ka C	An D	Ka Z (G)	Ka Row 3	An Row 3
9	Ka Lt DP	Ka Rt DP	An Rt DP	NC	Ka Row 1	An Row 1
10	Ka One c	No Pin	An C	Ka One C (C)	An Col 4	Ka Col 4
11	Ka One b An One c	No Pin	An G	Ka One B (B)	An Col 3	Ka Col 3
12	No Pin	An Com	No Pin	No Pin	Ka Row 4	An Row 4
13	No Pin	Ka B	An B	No Pin	An Col 1	Ka Col 1
14	An One b Lt DP	Ka A	Com Ka	An One B/C (B/C)	Ka Row 2	An Row 2

[1] Pin 2 is Internally Connected to Pin 9
[2] Pin 3 is Internally Connected to Pin 14
[3] Common Anode Left Decimal
[4] Common Anode Right Decimal
[5] Common Cathode Right Decimal
[6] Common Cathode Left Decimal
[7] Pins 3, 6 & 14 are Internally Connected
[8] Pins 3 & 4 are Internally Connected
[9] Upper Decimal Left Dec
[10] Left and Right Decimal Point
[11] Seg H & J are Internally Connected in Series. Pins 5 & 14 are Internally Commoned

48. SCHEMATIC DRAWINGS

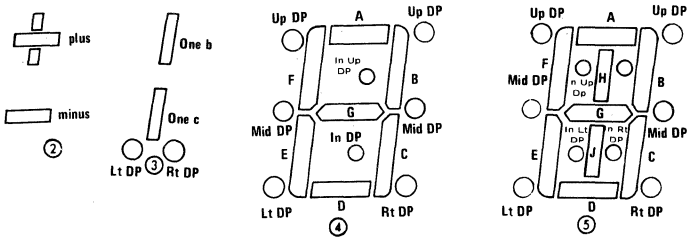

E144

Pin	a ④	b ④
1	NC	NC
2	An E	An E Dig 1-4
3	An D	Ka Dig 1
4	An C	NC
5	An DP	NC
6	An G	Ka Dig 2
7	Ka (4)	An D Dig 1-4
8	NC	An G Dig 1-4
9	An B	NC
10	Ka (3)	Ka Dig 3
11	An F	An B Dig 1-4
12	Ka (2)	An A Dig 1-4
13	An A	An F Dig 1-4
14	Ka (1)	Ka Dig 4

E146

Pin	a ④	b ④	c ④	d ④	e ④	f ④	g ④
1	An 1 (Lft)	Ka 1	Ka 1	Ka 1 (Lft)	Ka A	An F	An C, D
2	An 2	An E	An E	Ka 2	Ka F	An G	No Pin
3	An 3	An C	An C	Ka 3	Com An	No Pin	No Pin
4	Ka A	Ka (3)	Ka (3)	An A	No Pin	Com Ka	Int Conn
5	Ka F	An In DP	An Rt DP	An F	No Pin	No Pin	No Pin
6	Ka B	An D	An D	An B	NC	An E	No Pin
7	Ka G	Ka (5)	Ka (5)	An G	Ka E	An D	Ka E
8	An 4	An G	An G	Ka 4	Ka D	An C	Ka C
9	Ka D	Ka (4)	Ka (4)	An D	Ka DP	An DP	Ka DP
10	Ka C	An F	An F	An C	Ka C	No Pin	Ka B
11	Ka E	NC	NC	An E	Ka G	No Pin	Ka A
12	Ka DP	An B	An B	An Rt DP	No Pin	Com Ka	No Pin
13	An 5	Ka (2)	Ka (2)	Ka 5	Ka B	An B	No Pin
14	An 6 (Rt)	An A	An A	Ka 6 (rt)	Com A	An A	An A, B, DP

E152

Pin	a ②③④
1	Seg Minus [I] (1)
2	Seg Plus [H] (1)
3	Seg One c [C] (1)
4	Seg Rt DP (1)
5	Seg E (2)
6	Seg D (2)
7	Seg G (2)
8	Seg C (2)
9	Seg Rt D.P. (2)
10	Seg B (2)
11	Seg A (2)
12	Seg F (2)
13	An/Ka (2)
14	An/Ka (1)
15	Seg One b [B] (1)

E154

Pin	a ④	b ⑤	c ④	d ④	e ④	f ④
1	Com An (1)	NC	NC	NC	An Cln Lwr	An (1)
2	Ka Rt DP (1)	Ka H (1)	NC	NC	An Cln Up	Ka Rt DP (1)
3	Com An (2)	Ka J (1)	NC	NC	Ka E	Ka A
4	Ka Rt DP (2)	Com An (1)	Com Ka (1)	Com An (1)	Ka G	Ka F
5	Ka A	Ka F	An F	Ka F	Ka F	Ka B
6	Ka F	Com An (2)	Com Ka (2)	Com An (2)	Dr (4)	Ka D
7	Ka E	Ka C	An C	Ka C	Dr (3)	An (2)
8	Ka D	Ka Rt DP	An Rt DP	An Rt DP	Ka Cln Lwr	Ka Rt DP (2)
9	Com An (3)	Ka G	An G	Ka G	Ka Cln Up	An (3)
10	Ka Rt DP (3)	Ka E	An E	Ka E	Dr (2)	Ka Rt DP (3)
11	Ka C	Com An (3)	Com Ka (3)	Com Ka (3)	Dr (1)	Ka C
12	Ka G	Ka B	An B	Ka B	Ka B	Ka E
13	Ka B	Ka A	An A	Ka A	Ka D	Ka G
14	Com An (4)	Com An (4)	Com Ka (4)	Com An (4)	Ka A	An (4)
15	Ka Rt DP (4)	Ka D	An D	Ka D	Ka C	Ka Rt DP (4)

Continued on next page

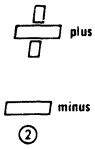

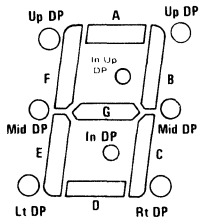

④

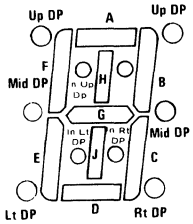

⑤

E154

Pin	g ⑤	h ②④	i ②④	j ④	k ④	m ④	n ④
1	An F	NC	NC	NC	NC	F	F
2	An H	Ka Neg	An Neg	NC	NC	NC	DP (1)
3	An D	Ka Pos	An Pos	NC	NC	D	D
4	An E	A1	K1	A1	K1	E	E
5	An Rt DP	Ka F	An F	Ka F	An F	DP	DP (2)
6	Ka (1)	A2	K2	A2	K2	DIG 1 CC/CA	DIG 1 CC/CA
7	Ka (2)	Ka C	An C	Ka C	An C	DIG 2 CC/CA	DIG 2 CC/CA
8	Ka (3)	K Rt DP	An Rt DP	Ka Rt DP	An Rt DP	DIG 3 CC/CA	DIG 3 CC/CA
9	Ka (4)	Ka G	An G	Ka G	An G	DIG 4 CC/CA	DIG 4 CC/CA
10	NC	Ka E	An E	Ka E	An E	NC	DP (3)
11	An A	A3	K3	A3	K3	A	A
12	An G	Ka B	An B	Ka B	An B	G	G
13	An B	Ka A	An A	Ka A	An A	B	B
14	An C	A4	K4	A4	K4	C	C
15	An J	Ka D	An D	Ka D	An D	NC	DP (4)

E155

Pin	a ④
1	An B
2	An G
3	An E
4	Ka 1
5	Ka 2
6	Ka 3
7	Ka 4
8	Ka 5
9	NC
10	NC
11	An DP
12	An D
13	An C
14	An A
15	An F

E162

Pin	a ④	b ④	c ⑤	d ④	e ④	f ④
1	An C (1)	Ka C (1)	Ka J (1)	An G (1)	Ka G (1)	An G
2	An E (1)	Ka E (1)	Ka C (1)	An E (1)	Ka E (1)	An E
3	An D (1)	Ka D (1)	Ka Rt DP (1)	An D (1)	Ka D (1)	NC
4	Com Ka (1)	Com An (1)	Ka G (2)	An C (1)	Ka C (1)	Com Ka (1)
5	Com-Ka (2)	Com Am (2)	Ka E (2)	An G (2)	Ka G (2)	An D
6	An D (2)	Ka D (2)	Ka D (2)	An E (2)	Ka E (2)	Com Ka (2)
7	An E (2)	Ka E (2)	Ka C (2)	An D (2)	Ka D (2)	An Rt DP
8	An C (2)	Ka C (2)	Ka Rt DP (2)	An C (2)	Ka C (2)	An C
9	An G (2)	Ka G (2)	Ka B (2)	Com Ka (1) (2)	Com An (1) (2)	An B
10	An A (2)	Ka A (2)	NC	An B (2)	Ka B (2)	NC
11	An F (2)	Ka F (2)	Ka A (2)	An A (2)	Ka A (2)	NC
12	An B (2)	Ka B (2)	Ka F (2)	An F (2)	Ka F (2)	NC
13	An B (1)	Ka B (1)	Ka B (1)	An B (1)	Ka B (1)	An A
14	An F (1)	Ka F (1)	Com An (1) (2)	An A (1)	Ka A (1)	NC
15	An A (1)	Ka A (1)	Ka H (1)	An F (1)	Ka F (1)	An F
16	An G (1)	Ka G (1)	Ka G (1)	NC	NC	NC

Continued on next page

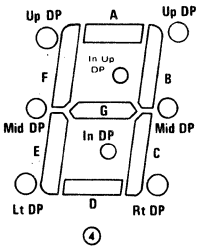

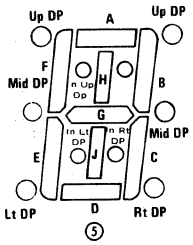

E162

Pin	g ④	h ④	i ④	j ④	k ④	m ④	n ④	o ④	p ④
1	Ka E	Ka C (1)	An C (1)	Ka E (1)	An E (1)	An E (1)	Ka E (1)	Ka G (1)	An G (1)
2	Com An (1)	Ka E (1)	An E (1)	Ka D (1)	An D (1)	An D (1)	Ka D (1)	Ka E (1)	An E (1)
3	NC	Ka D (1)	An D (1)	An Com (1)	Ka Com (1)	Ka Com (1)	An Com (1)	Ka D (1)	An D (1)
4	Ka C	An (1)	Ka (1)	Ka C (1)	An C (1)	An C (1)	Ka C (1)	Ka C (1)	An C (1)
5	Com An (2)	An (2)	Ka (2)	Ka B (2)	An B (2)	An E (2)	Ka E (2)	Ka Lft DP	An Lft DP
6	Ka D	Ka D (2)	An D (2)	Ka A (2)	An A (2)	An D (2)	Ka D (2)	Ka E (2)	An E (2)
7	Ka Rt DP	Ka E (2)	An E (2)	Ka F (2)	An F (2)	Ka Com (2)	An Com (2)	Ka D (2)	An D (2)
8	Ka G	Ka C (2)	An C (2)	Ka G (2)	An G (2)	An C (2)	Ka C (2)	Ka C (2)	An C (2)
9	Ka B	Ka G (2)	An G (2)	Ka E (2)	An E (2)	An B (2)	Ka B (2)	Com An	Com Ka
10	NC	Ka A (2)	An A (2)	Ka D (2)	An D (2)	An A (2)	Ka A (2)	Ka B (2)	An B (2)
11	NC	Ka F (2)	An F (2)	An Com (2)	Ka Com (2)	Am F (2)	Ka F (2)	Ka A (2)	An A (2)
12	NC	Ka B (2)	An B (2)	Ka C (2)	An C (2)	An G (2)	Ka G (2)	Ka F (2)	An F (2)
13	Ka A	Ka B (1)	An B (1)	Ka B (1)	An B (1)	An B (1)	Ka B (1)	Ka G (2)	An G (2)
14	NC	Ka F (1)	An F (1)	Ka A (1)	An A (1)	An A (1)	Ka A (1)	Ka B (1)	An B (1)
15	Ka F	Ka A (1)	An A (1)	Ka F (1)	An F (1)	An F (1)	Ka F (1)	Ka A (1)	An A (1)
16	NC	Ka G (1)	An G (1)	Ka G (1)	An G (1)	An G (1)	Ka G (1)	Ka F (1)	An F (1)

E162

Pin	q ④	r ④
1	Ka E (1)	An E (1)
2	Ka D (1)	An D (1)
3	Ka C (1)	An C (1)
4	An Com	Ka Com
5	No Pin	No Pin
6	Ka E (2)	An E (2)
7	Ka D (2)	An D (2)
8	Ka C (2)	An C (2)
9	Ka G (2)	An G (2)
10	Ka B (2)	An B (2)
11	Ka A (2)	An A (2)
12	Ka F (2)	An F (2)
13	Ka G (1)	An G (1)
14	Ka B (1)	An B (1)
15	Ka A (1)	An A (1)
16	Ka F (1)	An F (1)

E163

Pin	a ④
1	An A Dig 1-3
2	NC
3	An D Dig 1-3
4	Ka Dig 1
5	NC
6	NC
7	Ka Dig 2
8	An C Dig 1-3
9	NC
10	Ka Dig 3
11	An B Dig 1-3
12	An F Dig 1-3
13	An E Dig 1-3
14	NC
15	NC
16	An G Dig 1-3

E164

Pin	a ⑤	b ④	c ④
1	NC	NC	NC
2	Ka E	An E	Ka E
3	Com An (1)	Com Ka (1)	Com An (1)
4	Ka J (1)	NC	NC
5	Ka H (1)	NC	NC
6	Com An (2)	Com Ka (2)	Com An (2)
7	Ka D	An D	Ka D
8	Ka G	An G	Ka G
9	NC	NC	NC
10	Com An (3)	Com Ka (3)	Com An (3)
11	Ka B	An B	Ka B
12	Ka A	An A	Ka A
13	Ka F	An F	Ka F
14	Com An (4)	Com Ka (4)	Com An (4)
15	Ka Rt DP	An Rt DP	Ka Rt DP
16	Ka C	An C	Ka C

Continued on next page

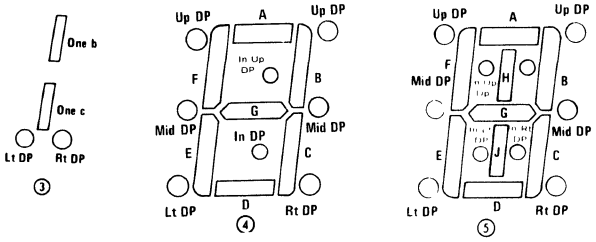

E164

Pin	d ⑤	e ④	f ④	g ⑤	h ④	i ③⑤	j ③⑤	k ④
1	Ka A	An A	Ka A	Ka PM In	PM/Dgr	NC	NC	Seg A
2	NC	NC	NC	An PM In	Seg D	An E (2,3,4)	Ka E (2,3,4)	NC
3	Ka D	An D	Ka D	An D Seg	Seg C	Ka Com (1)	An Com (1)	Seg D
4	Com An (1)	Com Ka (1)	Com An (1)	An C Seg	Seg B	An Vb (1) [J]	Ka Vb (1) [J]	Com DP 1 Digit 1
5	Ka J (1)	NC	NC	An B Seg	Seg A	An Va (1) [I]	Ka Va (1) [I]	NC
6	Ka H (1)	NC	NC	An A Seg	Seg E	Ka Com (2)	An Com (2)	NC
7	Com An (2)	Com Ka (2)	Com An (2)	An E Seg	Seg F	An D (2,3,4)	Ka D (2,3,4)	Com DP 2 Dig 2
8	Ka C	An C	Ka C	An F Seg	Seg G	An G (1,2,3,4)	Ka G (1,2,3,4)	Seg C
9	NC	NC	NC	An G Seg	(1)	NC	NC	NC
10	Com An (3)	Com Ka (3)	Com An (3)	Ka A/In (1)	(2)	Ka Com (3)	An Com (3)	Com DP 3 Dig 3
11	Ka B	An B	Ka B	Ka (2)	Mid DP	An B (1,2,3,4)	Ka B (1,2,3,4)	Seg B
12	Ka F	An F	Ka F	An H Seg Cln	Up DP	An A (2,3,4)	Ka A (2,3,4)	Seg F
13	Ka E	An E	Ka E	An J Seg Cln	(4)	An F (1,2,3,4)	Ka F (1,2,3,4)	Seg E
14	Com An (4)	Com Ka (4)	Com An (4)	Ka (4) N Seg Cln	PM/Dgr	Ka Com (4)	An Com (4)	Com DP 4 Dig 4
15	Ka Rt DP	An Rt DP	Ka Rt DP	An A1 In	(3)	An Rt DP (1-4)	Ka Rt DP (1-4)	DP
16	Ka G	An G	Ka G	Ka (3) J Seg Cln	AL	NC	NC	Seg G

E164

Pin	l ⑤	m ④	n ④	o ④	p ④	q ④	r ④
1	An PM	Ka BG (2)	An PM	NC	Ka A Dig 2-4	An A Dig 1-4	Ka A Dig 1-4
2	An D	Ka CD (2)	An E	Ka E Dig 1-4	NC	NC	NC
3	An C	Ka AF (2)	Ka (1)	An Dig 1	Ka D Dig 2-4	An D Dig 1-4	Ka D Dig 1-4
4	An B	NC	NC	NC	An Dig 1	Ka Dig 1	An Dig 1
5	An A	Ka AF (3)	NC	NC	Ka J Dig 1	NC	NC
6	An E	Ka BG (3)	Ka (2)	An Dig 2	Ka H Dig 1	NC	NC
7	An F	Ka CD (3)	An D	Ka D Dig 1-4	An Dig 2	Ka Dig 2	An Dig 2
8	An G	Ka E (4,3)	An G	Ka G Dig 1-4	Ka C Dig 1-4	An C Dig 1-4	Ka C Dig 1-4
9	Dig (1)	Ka BG (4)	NC	NC	NC	NC	NC
10	Dig (2)	Ka CD (4)	Ka (3)	An Dig 3	An Dig 3	Ka Dig 3	An Dig 3
11	An J	Ka AF (4)	An B	Ka B Dig 1-4	Ka B Dig 1-4	An B Dig 1-4	Ka B Dig 1-4
12	An H	Ka B (1) PM	An A	Ka A Dig 1-4	Ka F Dig 2-4	An F Dig 1-4	Ka F Dig 1-4
13	Dig (4)	Ka C (1) E (2)	An F	Ka F Dig 1-4	Ka E Dig 2-4	An E Dig 1-4	Ka E Dig 1-4
14	Ka PM	NC	Ka (4)	An Dig 4	An Dig 4	Ka Dig 4	An Dig 4
15	Dig (3)	Com An (1)	An DP	Ka D.P. 1-4	Ka D.P.	An D.P. 1-4	Ka D.P. 1-4
16	An ALM	Com An (2)	An C	Ka C Dig 1-4	Ka G Dig 1-4	An G Dig 1-4	Ka G Dig 1-4

Continued on next page

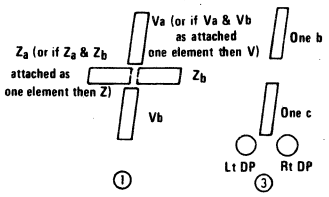

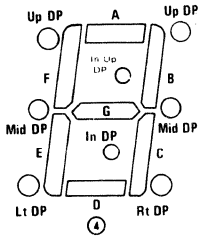

E168

Pin	a ④
1	Ka (1)
2	Ka (2)
3	Ka (3)
4	Ka (4)
5	Ka (5)
6	Ka (6)
7	Ka (7)
8	Ka (8)
9	An Rt DP
10	An F Seg
11	An G Seg
12	An A Seg
13	An B Seg
14	An C Seg
15	An D Seg
16	An E Seg

E166

Pin	a ④
1	C (1-6)
2	
3	(2)
4	D (1-6)
5	(4)
6	(6)
7	E (1-6)
8	dec
9	G (1-6)
10	
11	(5)
12	A (1-6)
13	(3)
14	(1)
15	B (1-6)
16	F (1-6)

E178

Pin	a ④
1	NC
2	An C Seg
3	Ka (1)
4	An Rt DP Seg
5	Ka (2)
6	An A Seg
7	Ka (3)
8	An E Seg
9	Ka (4)
10	An D Seg
11	Ka (5)
12	An G Seg
13	Ka (6)
14	An B Seg
15	Ka (7)
16	An F Seg
17	Ka (8)

E179

Pin	a ④	b ④
1	NC	Ka (1)
2	An C Seg	An C Seg
3	Ka (2)	Ka (2)
4	An Rt DP	An Rt DP
5	Ka (3)	Ka (3)
6	An A Seg	An A Seg
7	Ka (4)	Ka (4)
8	An E Seg	An E Seg
9	Ka (5)	Ka (5)
10	An D Seg	An D Seg
11	Ka (6)	Ka (6)
12	An G Seg	An G Seg
13	Ka (7)	Ka (7)
14	An B Seg	An B Seg
15	Ka (8)	Ka (8)
16	An F Seg	An F Seg
17	Ka (9)	Ka (9)

Continued on next page

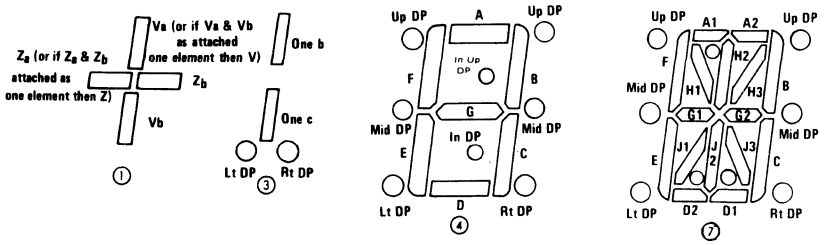

E181

Pin	a ④	b ④	c ④	d ④	e ①③	f ①③	g ④	j[13] ④
1	NC	NC	No Pin	No Pin	NC	NC	NC	No Pin
2	Ka A	An A	Ka A	An A	Ka D	An V [D]	Seg A	Ka A
3	Ka F	An F	Ka F	An F	NC	NC	Seg F	Ka F
4	An	Com Ka	Com An	Com Ka	NC	NC	Com Ka	An
5	Ka E	An E	Ka E	An E	NC	NC	Seg E	Ka E
6	An	Com Ka	No Pin	No Pin	NC	NC	Com Ka	An
7	Ka Lft DP	An Lft DP	Ka Lft DP	An Lft DP	NC	NC	NC	Ka Lft DP
8	NC	NC	No Pin	No Pin	Com An C. D	Com Ka VZ [C. D]	NC	No Pin
9	NC	NC	No Pin	No Pin	NC	NC	NC	No Pin
10	NC	NC	No Pin	No Pin	NC	NC	Rt D.P.	No Pin
11	Ka D	An D	Ka D	An D	Ka B	An One c [B]	Seg D	Ka D
12	An	Com Ka	Com An	Com Ka	NC	NC	Com Ka	An
13	Ka C	An C	Ka C	An C	NC	NC	Seg C	Ka C
14	Ka G	An G	Ka G	An G	Com An A. B	Com Ka One b One c [A. B]	Seg G	Ka G
15	Ka B	An B	Ka B	An B	NC	NC	Seg B	Ka B
16	NC	NC	No Pin	No Pin	Ka A		NC	No Pin
17	An	Com Ka	Com An	Com Ka	Ka C	An Z [C]	Com Ka	An
18	NC	NC	No Pin	No Pin	NC	NC	NC	No Pin

E181

Pin	k[13] ④	m[14] ④	n[14] ④	o ①③	p ④	q ①③	r ④	s ③	t ⑦
1	No Pin	No Pin	No Pin	No Pin	**NC**	NC	NC	**NC**	An B
2	Ka A	An A	An A	Ka One b [A]	**Ka A**	NC	An A	**NC**	An A
3	Ka F	An F	An F	An V [D]	**Ka F**	NC	An F	**NC**	An M
4	An	Ka	Ka	Ka V [D]	**Com An**	Com An	Com Ka	**Com Ka**	An K
5	Ka E	An E	An E	Ka Z [C]	**Ka E**	Ka Z [C]	An E	**An Z (C)**	An H
6	An	Ka	Ka	Ka V [E]	**NC**	NC	NC	**NC**	An G
7	NC	NC	An Lft DP	An V [E]	**Ka E**	Ka Z [C]	An E	**An Z (C)**	An T
8	No Pin	No Pin	No Pin	Ka Rt DP	**NC**	NC	NC	**NC**	An F
9	No Pin	No Pin	No Pin	No Pin	**Ka D**	Ka V [D]	Com Ka	**Com Ka**	An E
10	Ka Rt DP	An Rt DP	No Pin	An Rt DP	**Ka Rt DP**	Ka Rt DP	An Rt DP	**An Rt DP**	An Rt DP
11	Ka D	An D	An D	Ka Rt DP	**Ka D**	Ka V [D1]	An D	**An V (D2)**	An S
12	An	Ka	Ka	Ka One c [B]	**Com An**	Com An	Com Ka	**Com Ka**	An R
13	Ka C	An C	An C	An One c [B]	**Ka C**	Ka One c [B]	An C	**An One c (B)**	An D
14	Ka G	An G	An G	An Z [C]	**Ka G**	Ka V [D2]	An G	**An V (D1)**	An U
15	Ka B	An B	An B	An One b [A]	**Ka B**	Ka One b [A]	An B	**An One b (A)**	An P
16	No Pin	No Pin	No Pin	No Pin	**NC**	NC	NC	**NC**	An C
17	An	Ka	Ka	Ka One b [A]	**Com An**	Com An	Com Ka	**Com Ka**	An N
18	No Pin	No Pin	No Pin	No Pin	**NC**	NC	NC	**NC**	**Com Ka**

[1] Pin 2 is Internally Connected to Pin 9
[2] Pin 3 is Internally Connected to Pin 14
[3] Common Anode Left Decimal
[4] Common Anode Right Decimal
[5] Common Cathode Right Decimal
[6] Common Cathode Left Decimal
[7] Pins 3, 6 & 14 are Internally Connected
[8] Pins 3 & 4 are Internally Connected
[9] Upper Decimal Left Dec
[10] Left and Right Decimal Point
[11] Seg H & J are Internally Connected in Series.
[12] Pin 5 Includes DP (A) & Pin 10 Includes DP (B)
[13] Redundant Anodes
[14] Redundant Cathodes
Pins 5 & 14 are Internally Commoned

Continued on next page

48. SCHEMATIC DRAWINGS

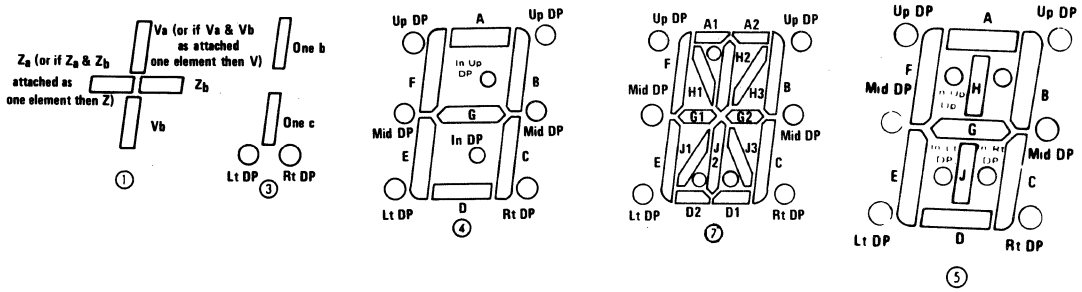

E181

Pin	u ⑦	v ⑦	w ⑦	x ④	y ④	z ④	④ aa	ab	ac
1	Ka B	Ka E	Ka I	NC	NC	NC	NC	Ka Col 1	Ka Row 1
2	Ka A	Ka D	Ka H	Ka A	An A	Ka A	Ka A	No Pin	No Pin
3	Ka M	Ka M	Ka F	Ka F	An F	Ka F	An D	An Row 3	An Col 3
4	Ka K	Ka N	Com An	An	Ka	Com An	Ka D	Ka Col 2	Ka Row 3
5	Ka H	Ka L	Ka G 1	Ka E	An E	Ka E	Ka C	No Pin	No Pin
6	Ka G	Ka J	Ka E	An	Ka	Com An	Ka E	An Row 5	An Col 1
7	Ka T	Ka C	Ka M	Ka Lt DP	An Lt DP	NC	An E	No Pin	No Pin
8	Ka F	Ka K	Ka D	NC	NC	NC	Ka DP	An Row 6	An Col 2
9	Ka E	Ka B	Ka L	NC	NC	Ka Lft DP	NC	An Row 7	Ka Row 7
10	Ka Rt DP	Ka F	Ka K	Ka Rt DP	An Rt DP	Ka Rt DP	An DP	Ka Col 3	Ka Row 6
11	Ka S	Ka G	Ka C	Ka D	An D	Ka D	Ka DP	Ka Col 5	An Col 4
12	Ka R	Ka O	Ka D.P	An	Ka	Com An	Ka B	No Pin	No Pin
13	Ka D	Ka P	Com An	Ka C	An C	Ka C	An B	An Row 4	Ka Row 5
14	Ka U	An Com	Ka G 2	Ka G	An G	Ka G	An C	No Pin	No Pin
15	Ka P	Ka I	Ka B	Ka B	An B	Ka B	An A	Ka Col 4	Ka Row 4
16	Ka C	Ka H	Ka J	NC	NC	NC	NC	An Row 2	Ka Row 2
17	Ka N	Ka DP	Com An	An	Ka	Com An	Ka A	No Pin	No Pin
18	Com An	Ka A	Ka A	NC	NC	NC	NC	An Row 1	An Col 5

[1] Pin 2 is Internally Connected to Pin 9
[2] Pin 3 is Internally Connected to Pin 14
[3] Common Anode Left Decimal
[4] Common Anode Right Decimal
[5] Common Cathode Right Decimal
[6] Common Cathode Left Decimal
[7] Pins 3, 6 & 14 are Internally Connected
[8] Pins 3 & 4 are Internally Connected
[9] Upper Decimal Left Dec
[10] Left and Right Decimal Point
[11] Seg H & J are Internally Connected in Series.
[12] Pin 5 Includes DP (A) & Pin 10 Includes DP (B)
[13] Redundant Anodes
[14] Redundant Cathodes
Pins 5 & 14 are Internally Commoned

48. SCHEMATIC DRAWINGS

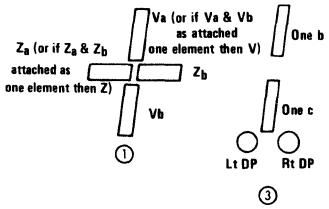

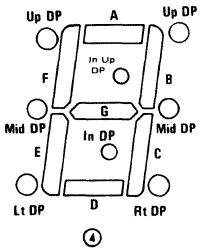

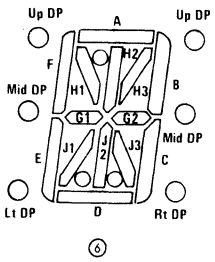

E182

Pin	a ①③④	b ①③④	c ④	d ④	e ③④
1	Ka Z [C] (1)	An V [D] (1)	Ka E (1)	An E (1)	Ka Z [C] (1)
2	Ka V [D] (1)	An Z [C] (1)	Ka D (1)	An D (1)	Ka V [D] (1)
3	Ka One c [B] (1)	An One c [B] (1)	Ka C (1)	An C (1)	Ka One c [B] (1)
4	Ka Rt DP (1)	An Rt DP (1)	Ka Rt DP (1)	An Rt DP (1)	Ka Rt DP (1)
5	Ka E (2)	An E (2)	Ka E (2)	An E (2)	Ka E (2)
6	Ka D (2)	An D (2)	Ka D (2)	An D (2)	Ka D (2)
7	Ka G (2)	An G (2)	Ka G (2)	An G (2)	Ka G (2)
8	Ka C (2)	An C (2)	Ka C (2)	An C (2)	Ka C (2)
9	Ka Rt DP (2)	An Rt DP (2)	Ka Rt DP (2)	An Rt DP (2)	Ka Rt DP (2)
10	Ka B (2)	An B (2)	Ka B (2)	An B (2)	Ka B (2)
11	Ka A (2)	An A (2)	Ka A (2)	An A (2)	Ka A (2)
12	Ka F (2)	An F (2)	Ka F (2)	An F (2)	Ka F (2)
13	An (2)	Com Ka (2)	An (2)	Com Ka (2)	An (2)
14	An Rt DP (1)	Ka Rt DP (1)	An (1)	Com Ka (1)	An (1)
15	Ka One b [A] (1)	An One b [A] (1)	Ka B (1)	An B (1)	Ka One b [A] (1)
16	An One c, One b [A, B] (1)	Com Ka One c, One b [A, B] (1)	Ka A (1)	An A (1)	NC
17	NC	NC	Ka G (1)	An G (1)	NC
18	An Vz [C, D] (1)	Com Ka Vz [C, D] (1)	Ka F (1)	An F (1)	NC

E182

Pin	f ①③④	g ①③④	h[12] ④	i ⑥	j ③④	k ④
1	An Z [C] (1)	An V [D] (1)	An D	An E	Ka	An C (1)
2	An V [D] (1)	An Z [C] (1)	NC	An M	An F	An E (1)
3	An One c [B] (1)	An One c [B] (1)	An G	NC	NC	An D (1)
4	An Rt DP (1)	An Rt DP (1)	An C	An L	An One b [H] (1)	Com Ka (1)
5	An E (2)	An E (2)	Ka (2)	An K	NC	Com Ka (2)
6	An D (2)	An D (2)	An Rt DP (A)	An J	An One c [I] (1)	An D (2)
7	An G (2)	An G (2)	NC	An D	NC	An E (2)
8	An C (2)	An C (2)	Ka (3)	An Rt DP	An E	An C (2)
9	An Rt DP (2)	An Rt DP (2)	An Rt DP (B)	An C	Ka	An Rt DP (2)
10	An B (2)	An B (2)	Ka (4)	An B	Ka	An G (2)
11	An A (2)	An A (2)	NC	Ka (2)	An D	An A (2)
12	An F (2)	An F (2)	An A	An A	NC	An F (2)
13	Ka (2)	Com Ka (2)	NC	An N	An C	An B (2)
14	Ka (1)	Com Ka (1)	An B	An H	An G	An B (1)
15	An One b [A] (1)	An One b [A] (1)	Ka (1)	An G	An B	An F (1)
16	NC	NC	NC	Ka (1)	NC	An A (1)
17	NC	NC	An E	An P	An A	An G (1)
18	NC	NC	An F	An F	Ka	An Rt DP (1)

[12] Pin 5 Includes DP (A) & Pin 10 Includes DP (B)

Continued on next page

48. SCHEMATIC DRAWINGS

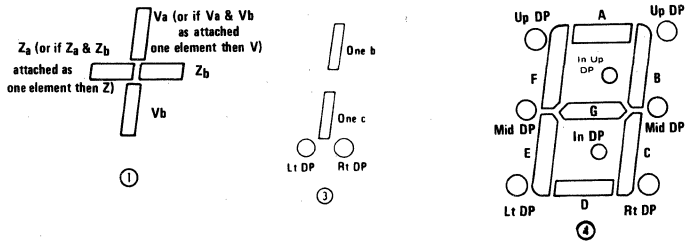

E182

Pin	m ④	n①③④	o ①③④	p ④	q ④	r ④
1	Ka C (1)	NC	NC	Ka E (1)	Com An (1, 2)	Com Ka (1, 2)
2	Ka E (1)	An Rt DP (1)	Ka Rt DP (1)	Ka D (1)	Ka E (1)	An E (1)
3	Ka D (1)	An One c [B] (1)	Ka One c [B] (1)	Ka C (1)	Ka D (1)	An D (1)
4	Com An (1)	Com Ka (1)	Com An (1)	Ka Rt DP (1)	Ka C (1)	An C (1)
5	Com An (2)	Com Ka (2)	Com An (2)	Ka E (2)	Ka Rt DP (1)	An Rt DP (1)
6	Ka D (2)	An D (2)	Ka D (2)	Ka D (2)	Ka E (2)	An E (2)
7	Ka E (2)	An E (2)	Ka E (2)	Ka G (2)	Ka D (2)	An D (2)
8	Ka C (2)	An C (2)	Ka C (2)	Ka C (2)	Ka C (2)	An C (2)
9	Ka Rt DP (2)	An Rt DP (2)	Ka Rt DP (2)	Ka Rt DP (2)	Ka Rt DP (2)	An Rt DP (2)
10	Ka G (2)	An G (2)	Ka G (2)	Ka B (2)	Com An (1, 2)	Com Ka (1, 2)
11	Ka A (2)	An A (2)	Ka A (2)	Ka A (2)	Ka B (2)	An B (2)
12	Ka F (2)	An F (2)	Ka F (2)	Ka F (2)	Ka A (2)	An A (2)
13	Ka B (2)	An B (2)	Ka B (2)	Com An	Ka F (2)	An F (2)
14	Ka B (1)	An One b [A] (1)	Ka One b [A] (1)	Com An	Ka G (2)	An G (2)
15	Ka F (1)	An Va [DL] (1)	Ka Va [DL] (1)	Ka B (1)	Ka B (1)	An B (1)
16	Ka A (1)	An Z [C] (1)	Ka Z [C] (1)	Ka A (1)	Ka A (1)	An A (1)
17	Ka G (1)	An Vb [Du] (1)	Ka Vb [Du] (1)	Ka G (1)	Ka F (1)	An F (1)
18	Ka Rt DP (1)	NC	NC	Ka F (1)	Ka G (1)	An G (1)

E182

Pin	s ①③④	t ①③④	u ④	v ①③④	w ④	x ④	y ④
1	Com An (1, 2)	Com Ka (1, 2)	Seg E (1)	Ka V [D] (1)	Ka D (1)	An EJ 1	Ka EJ 1
2	Ka Va [J] (1)	An Va [J] (1)	Seg D (1)	Ka Z [C] (1)	Ka E (1)	An D 1	Ka D 1
3	NC	NC	Seg C (1)	Ka One C [B] (1)	Ka C (1)	An C 1	Ka C 1
4	Ka One c [C] (1)	An One c [C] (1)	Seg Rt DP (1)	Ka Rt DP (1)	Ka Rt DP (1)	An DP 1	Ka DP 1
5	Ka Rt DP (1)	An Rt DP (2)	Seg E (2)	Ka E (2)	Ka E (2)	An E 2	Ka E 2
6	Ka E (2)	An E (2)	Seg D (2)	Ka D (2)	Ka D (2)	An D 2	Ka D 2
7	Ka D (2)	An D (2)	Seg G (2)	Ka G (2)	Ka G (2)	An G 2	Ka G 2
8	Ka C (2)	An C (2)	Seg C (2)	Ka C (2)	Ka C (2)	An C 2	Ka C 2
9	Ka Rt DP (2)	An Rt DP (2)	Seg Rt DP (2)	Ka Rt DP (2)	Ka Rt DP (2)	An DP 2	Ka DP 2
10	Com An (1, 2)	Com Ka (1, 2)	Seg B (2)	Ka B (2)	Ka B (2)	An B 2	Ka B 2
11	Ka B (2)	An B (2)	Seg A (2)	Ka A (2)	Ka A (2)	An A 2	Ka A 2
12	Ka A (2)	An A (2)	Seg F (2)	Ka F (2)	Ka F (2)	An F 2	Ka F 2
13	Ka F (2)	An F (2)	An/Ka (2)	An (2)	An (2)	Com Ka 2	Com An 2
14	Ka G (2)	An G (2)	An/Ka (1)	An (1)	An (1)	Com Ka 1	Com An 1
15	Ka One b [B] (1)	An One b [B] (1)	Seg B (1)	Ka One b [A] (1)	Ka B (1)	An B 1	Ka B 1
16	NC	NC	Seg A (1)	Com An Vz [C, D] (1)	Ka A (1)	An A 1	Ka A 1
17	Ka Va [H] (1)	An Va [H] (1)	Seg G (1)	NC	Ka G (1)	An G 1	Ka G 1
18	Ka Z [G] (1)	An Z [G] (1)	Seg F (1)	Com An One b, c [A, B] (1)	Ka F (1)	An FH 1	Ka FH 1

Continued on next page

48. SCHEMATIC DRAWINGS

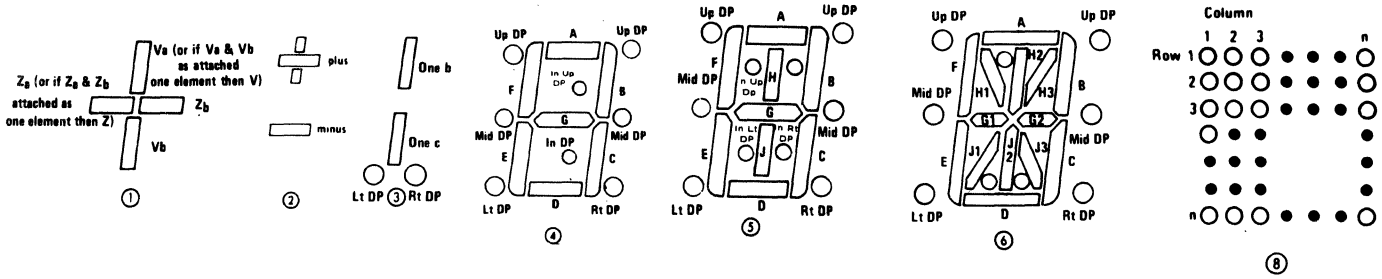

E182

Pin	②③④ z	aa②③④
1	minus	minus
2	plus	plus
3	K One C	A One C
4	KDP 1	ADP 1
5	K seg E	A seg E
6	K seg D	A seg D
7	K seg G	A seg G
8	K seg C	A seg C
9	KDP 2	ADP 2
10	K seg B	A seg B
11	K seg A	A seg A
12	K seg F	A seg F
13	Com A2	Com K2
14	Com A1	Com K1
15	K seg B	A seg B
16	NC	NC
17	NC	NC
18	NC	NC

E182

Pin	④⑤ ab	①③④ ac	ad ①③④	ae①②③	af⑥
1	Ka V1	Cc 1	An Vb (1)	Ka Vb (1)	An E
2	Ka G1	Dc 1	NC	NC	An J1
3	Ka C1	Bc 1	An One c (1)	Ka One C (1)	NC
4	Ka D.P.	DPc 1	An Rt DP (1)	Ka Rt DP (1)	An J2
5	Ka F1	Ec 2	An E (2)	Ka E (2)	An J3
6	Ka D1	Dc 2	An D (2)	Ka D (2)	An G2
7	Ka G2	Gc 2	An G (2)	Ka G (2)	An D
8	Ka C2	Cc 2	An C (2)	Ka C (2)	An Rt DP
9	Ka D.P. 2	DPc 2	An Rt DP (2)	Ka Rt DP (2)	An C
10	Ka B2	Bc 2	An B (2)	Ka B (2)	An B
11	Ka A2	Ac 2	An A (2)	Ka A (2)	Com Ka (2)
12	Ka F2	Fc 2	An F (2)	Ka F (2)	An A
13	An	a 2	Com Ka (2)	Com An (2)	An G1
14	An 1	a 1	Com Ka (1)	Com An (1)	An H3
15	a A1	Ac 1	An One b (1)	Ka One b (1)	An H2
16	An	NC	NC	NC	Com Ka (1)
17	NP	NC	An Z (1)	Ka Z (1)	An H1
18	An	NC	An Va (1)	Ka Va (1)	An F

E182

Pin	ag⑥	ah④ *	ai④*	aj⑧*	ak④	am④
1	Ka E	Vss	Vss	Bit 32 Out	Ka E (1)	An E (1)
2	Ka J1	VLED	VLED	Bit 33 Out	Ka D (1)	An D (1)
3	NC	NC	NC	Bit 34 Out	Ka C (1)	An C (1)
4	Ka J2	NC	NC	Data In	Ka Rt DP (1)	An Rt DP (1)
5	Ka J3	NC	NC	Clk In	An Com (1)	Ka Com (1)
6	Ka G2	Bit 15 Out	Bit 17 Out	Data Enable	Ka E (2)	An E (2)
7	Ka D	Bit 16 Out	18	VDD	Ka D (2)	An D (2)
8	Ka Rt DP	Bit 17 Out	19	VLED	Ka C (2)	An C (2)
9	Ka C	Bit 18 Out	20	Bright Control	Ka Rt DP (2)	An Rt DP (2)
10	Ka B	Bit 19 Out	21	NC	An Com (2)	Ka Com (2)
11	Com An (2)	Bit 20 Out	22	NC	Ka B (2)	An B (2)
12	Ka A	Bit 21 Out	23	NC	Ka A (2)	An A (2)
13	Ka G1	Bit 22 Out	24	VSS 1	Ka G (2)	An G (2)
14	Ka H3	Data Enable	Data Enable	VSS 1	Ka F (2)	An F (2)
15	Ka H2	Data In	Data In	Bit 29 Out	Ka B (1)	An B (1)
16	Com An (1)	Clk In	Clk In	Bit 30 Out	Ka A (1)	An A (1)
17	Ka H1	VDD	VDD	Bit 31 Out	Ka G (1)	An G (1)
18	Ka F	Bright Control	Bright Control	NC	Ka F (1)	An F (1)

E183

Pin	a ④ *
1	Vss
2	VLED
3	VLED
4	Bit 25 Out
5	Bit 26 Out
6	Bit 27 Out
7	Bit 28 Out
8	Bit 29 Out
9	Bit 30 Out
10	Bit 31 Out
11	Bit 32 Out
12	Bit 33 Out
13	Bit 34 Out
14	Data Enable
15	Data In
16	Clk In
17	VDD
18	Bright Control

*-Builtin M5450 Logic

48. SCHEMATIC DRAWINGS

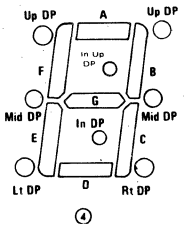

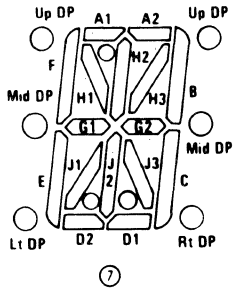

E184

Pin	a●	b ④	c ④	d ④	e ④	f●	g④	h⑦
1	CE 2	An (1, 3)	An (1, 3)	An C	Ka C	CE 1	An AM	CE1 Chip Enable
2	CE 3	An (2, 4)	An (2, 4)	Ka (2)	An (2)	CE 2	Ka Dig 1	CE2 Chip Enable
3	CLR	Ka Colon	Ka F (2)	No Pin	No Pin	CLR	Ka Col/D.P.	CLR Clear
4	CUE	Ka P.M SL	Ka G (1, 2)	An D	Ka D	CUE	Ka Dig 4	CUE Cursor Enable
5	CU	Ka F (2)	Ka E (1, 2)	Ka (3)	An (3)	CU	An A Dig 2-4	CU Cursor Select
6	WR	Ka G (1, 2)	Ka D (1, 2)	No Pin	No Pin	WR	An D.P.	WR Write
7	A1	Ka E (1, 2)	Ka C (1, 2)	Ka DP	Ka DP	A1	An C Dig 2-4	Addr In
8	AO	Ka D (1, 2)	Ka B (1, 2)	An DP	An DP	A0	An E Dig 2-4	Addr In
9	VCC	Ka C (1, 2)	Ka A (1, 2)	No Pin	No Pin	Vcc	An G Dig 2-4	Vcc
10	GND	Ka B (1, 2)	Ka PM/Up Colon	Ka (4)	Ka A	Gnd	NC	GND
11	DO	Ka A (1, 2)	Ka AL/Low Colon	An E	An (4)	D0	An F Dig 2-4	D0 Data In
12	D1	Ka A (3, 4)	Ka A (3, 4)	An B	Ka B	D1	An D Dig 2-4	D1 Data In
13	D2	Ka F (3, 4)	Ka F (3, 4)	No Pin	No Pin	D2	An UC/LC	D2 Data In
14	D3	Ka E (3, 4)	Ka E (3, 4)	An G	"G"	D3	An B Dig 2-4	D3 Data In
15	D6	Ka D (3, 4)	Ka D (3, 4)	An A	Ka F	D6	Ka Dig 4	D6 Data In
16	D5	Ka B (3, 4)	Ka C (3, 4)	No Pin	No Pin	D5	Ka Dig 2	D5 Data In
17	D4	Ka G (3, 4)	Ka G (3, 4)	An F	Ka E	D4	An PM	D4 Data In
18	CE1	Ka C (3, 4)	Ka B (3, 4)	Ka (1)	An (1)	BL	Ka AM/PM	BL Disp Blank

E186

Pin	a ④
1	NC
2	NC
3	An C Seg
4	NC
5	An Rt DP
6	Ka (3)
7	An A Seg
8	Ka (4)
9	An E Seg
10	Ka (5)
11	An D Seg
12	Ka (6)
13	An G Seg
14	Ka (7)
15	An B Seg
16	Ka (8)
17	An F Seg
18	NC

E187

Pin	a④
1	NC
2	NC
3	Seg 3
4	Dig 1
5	D.P.
6	Dig 2
7	Seg A
8	Dig 3
9	Seg E
10	Dig 4
11	Seg D
12	Dig 5
13	Seg G
14	Dig 6
15	Seg B
16	Dig 7
17	Seg F
18	NC

E188

Pin	a ④	b ④	c ⑦
1	NC	NC	NC
2	NC	NC	NC
3	An C Seg	Seg C	Ca
4	Ka (2)	Dig 1	c1
5	An Rt DP	D.P.	DPa
6	Ka (3)	Dig 2	c2
7	An A Seg	Seg A	Aa
8	Ka (4)	Dig 3	c3
9	An E Seg	Seg E	Ea
10	Ka (5)	Dig 4	c4
11	An D Seg	Seg D	Da
12	Ka (6)	Dig 5	c5
13	An G Seg	Seg G	Ga
14	Ka (7)	Dig 6	c6
15	An B Seg	Seg B	Ba
16	Ka (8)	Dig 7	c7
17	An F Seg	Seg F	Fa
18	Ka (9)	NC	c8

E189

Pin	a ④
1	NC
2	Ka (1)
3	An C Seg
4	Ka (2)
5	An Rt DP
6	Ka (3)
7	An A Seg
8	Ka (4)
9	An E Seg
10	Ka (5)
11	An D Seg
12	Ka (6)
13	An G Seg
14	Ka (7)
15	An B Seg
16	Ka (8)
17	An F Seg
18	Ka (9)

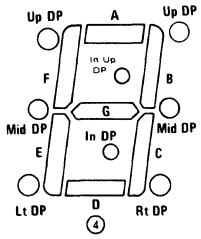

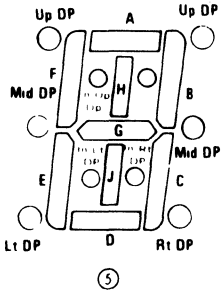

E194

Pin	a ④	b ④	c ④
1	An AM	An AM	Ka AM
2	Ka AM	An PM	Ka PM
3	Ka PM	Ka AM, PM	An AM, PM
4	An PM	Ka F	An F
5	An Cln Lwr	Ka B	An B
6	An Cln Up	Ka E	An E
7	An E	An (1)	Ka (1)
8	An G	An Low Col (1)	Ka Low Col (1)
9	An F	Ka Up Low Col	An Up Low Col
10	Ka (4)	Ka D	An D
11	Ka (3)	An Up Col (3)	Ka Up Col (3)
12	Ka Cln Lwr	Ka DP	An DP
13	Ka Cln Up	An DP (4)	Ka DP (4)
14	Ka (2)	Ka C	An C
15	Ka (1)	Ka G	An G
16	An B	Ka A	An A
17	An D	An FM, ST	Ka FM, ST
18	An A	Ka ST	An ST
19	An C	Ka FM	An FM

E202

Pin	a ⑤	b ④	c ④	d ④	e ④	f ④
1	NC	An G	Ka G	An E (1)	Ka E (1)	Com An
2	Ka J (1)	Com Ka (1)	Com An (1)	NC	NC	NC
3	NC	An E	Ka E	An D (1)	Ka D (1)	Ka E (2)
4	Ka C (1)	NC	NC	An Rt DP (1)	Ka C (1)	Ka D (2)
5	Ka Rt DP (1)	NC	NC	An C (1)	Ka Rt DP (1)	Ka C (2)
6	Ka G (2)	NC	NC	An G (2)	Ka G (2)	Ka B (2)
7	Ka E (2)	An D	Ka D	An E (2)	Ka E (2)	Ka A (2)
8	Ka D (2)	An Rt DP	Ka Rt DP	An D (2)	Ka D (2)	Ka G (2)
9	Ka C (2)	An C	Ka C	An Rt DP (2)	Ka C (2)	Ka F (2)
10	Ka Rt DP (2)	Com Ka (2)	Com An (2)	An C (2)	Ka Rt DP (2)	NC
11	Com An (1, 2)	An B	Ka B	Com Ka (1, 2)	Com An (1, 2)	NC
12	Ka B (2)	NC	NC	An B (2)	Ka B (2)	Ka E (1)
13	Ka A (2)	NC	NC	An A (2)	Ka A (2)	Ka D (1)
14	Ka F (2)	NC	NC	An F (2)	Ka F (2)	Ka C (1)
15	Ka B (2)	NC	NC	An B (1)	Ka B (1)	Ka B (1)
16	NC	NC	NC	An A (1)	Ka A (1)	Ka A (1)
17	Ka H (1)	An A	Ka A	NC	NC	Ka G (1)
18	NC	An F	Ka F	An F (1)	Ka F (1)	Ka F (1)
19	NC	NC	NC	NC	NC	NC
20	Ka G (1)	NC	NC	An G (1)	Ka G (1)	Com An

Continued on next page

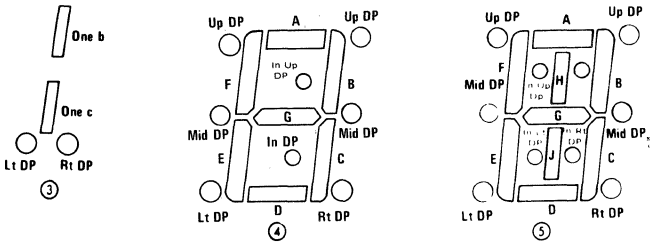

E202

Pin	g ④	h ④	i ④
1	Seg E (1)	Ka E (1)	An E (1)
2	NC	Ka D (1)	An D (1)
3	Seg D (1)	Ka C (1)	An C (1)
4	Seg DP (1)	Ka DP (1)	An DP (1)
5	NC	An Com (1)	Ka Com (1)
6	NC	Ka E (2)	An E (2)
7	Seg E (2)	Ka D (2)	An D (2)
8	Seg D (2)	Ka C (2)	An C (2)
9	Seg DP (2)	Ka DP (2)	An DP (2)
10	Seg C (2)	An Com (2)	Ka Com (2)
11	Com 1 & 2	An Com (2)	Ka Com (2)
12	Seg B (2)	Ka B (2)	An B (2)
13	Seg A (2)	Ka A (2)	An A (2)
14	Seg F (2)	Ka G (2)	An G (2)
15	Seg B (1)	Ka F (2)	An F (2)
16	Seg A (1)	An Com (1)	Ka Com (1)
17	NC	Ka B (1)	An B (1)
18	Seg F (1)	Ka A (1)	An A (1)
19	NC	Ka G (1)	An G (1)
20	Seg G (1)	Ka F (1)	An F (1)

E202

Pin	j ③④	k ③④	l ④	m ④	n ④	p ④
1	Ka Z (1)	An Z (1)	Ka E (1)	An E (1)	Ka E (1)	An E (1)
2	Ka Vb (1)	An Vb (1)	NC	NC	Ka D (1)	An D (1)
3	Ka One c (1)	An One c (1)	Ka D (1)	An D (1)	Ka C (1)	An C (1)
4	Ka DP (1)	An DP (1)	Ka C (1)	An C (1)	Ka Rt Dp (1)	An Rt Dp (1)
5	An Com (1)	Ka Com (1)	NC	NC	An Com (1)	Ka Com (1)
6	Ka E (2)	An E (2)	Ka G (2)	An G (2)	Ka E (2)	An E (2)
7	Ka D (2)	An D (2)	Ka E (2)	An E (2)	Ka D (2)	An D (2)
8	Ka C (2)	An C (2)	Ka D (2)	An D (2)	Ka C (2)	An C (2)
9	Ka DP (2)	An DP (2)	Ka C (2)	An C (2)	Ka Rt Dp (2)	An Rt Dp (2)
10	An Com (2)	Ka Com (2)	NC	NC	An Com (2)	Ka Com (2)
11	An Com (2)	Ka Com (2)	Com An	Com Ka	Ka B (2)	An B (2)
12	Ka B (2)	An B (2)	Ka B (2)	An B (2)	Ka A (2)	An A (2)
13	Ka A (2)	An A (2)	Ka A (2)	An A (2)	Ka G (2)	An G (2)
14	Ka G (2)	An G (2)	Ka F (2)	An F (2)	An Com (2)	Ka Com (2)
15	Ka F (2)	An F (2)	Ka B (1)	An B (1)	Ka F (2)	An F (2)
16	An Com (1)	Ka Com (1)	Ka A (1)	An A (1)	Ka B (1)	An B (1)
17	Ka A (1)	An A (1)	NC	NC	An Com (1)	Ka Com (1)
18	Ka Va (1)	An Va (1)	Ka F (1)	An F (1)	Ka A (1)	An A (1)
19	Ka One b (1)	An One b (1)	NC	NC	Ka G (1)	An G (1)
20	An Com (1)	Ka Com (1)	Ka G (1)	An G (1)	KA F (1)	An F (1)

48. SCHEMATIC DRAWINGS

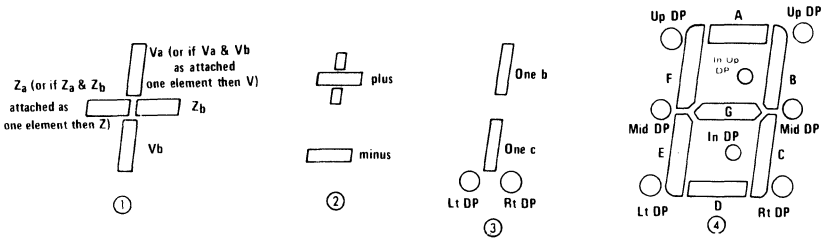

E204

Pin	a ①③④	b ●	c[17] ①④	d ②③④	e ②③④	f ④	g ④
1	Ka One b |A| (1)	D5	An Z |G| (1)	An Com (4)	Ka Com (4)	An PM	Ka PM
2	Ka Va |D1| (1)	D4	Ka Z |G| (1)	An Com (3)	Ka Com (3)	Ka (1)	An (1)
3	Ka Z |C| (1)	DO	An Va |H| (1)	An Com (2)	Ka Com (2)	An D	Ka D
4	Ka Vb |D2| (1)	D1	Ka Vb |J| (1)	Ka D (4, 3, 2)	An D (4, 3, 2)	An C	Ka C
5	Ka One c |B| (1)	D2	An Rt DP (1)	Ka C (4, 3, 2)	An C (4, 3, 2)	An Lower Colon	Ka Lower Colon
6	Com An (1)	D3	An Rt DP (2)	Ka B (4, 3, 2)	Ka B (4, 3, 2)	Ka Lower Colon (3)	An Lower Colon (3)
7	Ka Rt DP (1)	CE	An Rt DP (3)	Ka A (4, 3, 2)	An A (4, 3, 2)	Ka DP	An DP
8	Com An (2)	W	An Rt DP (4)	Ka G (4, 3, 2)	An G (4, 3, 2)	An DP	Ka DP
9	Ka Rt DP (2)	CU	An D	Ka F (4, 3, 2)	An F (4, 3, 2)	Ka Alarm	An Alarm
10	Ka A	AO	An C	Ka E (4, 3, 2)	An E (4, 3, 2)	An Alarm	Ka Alarm
11	Ka F	A1	An B	Ka Rt DP (2)	An Rt DP (2)	An G	Ka G
12	Ka E	NC	An A	Ka Rt DP (3)	An Rt DP (3)	Ka (4)	An (4)
13	Ka D	NC	An E	Ka Rt DP (4)	An Rt DP (4)	An B	Ka B
14	Com An (3)	NC	An F	Ka Rt DP (1)	An Rt DP (1)	An A	Ka A
15	Ka Rt DP (3)	NC	An G	An Com (1)	Ka Com	An E	Ka E
16	Ka C	NC	Ka Com (1)	Ka Va |B| (1)	An Va |B| (1)	An Upper Colon	Ka Upper Colon
17	Ka G	NC	Ka Com (2)	Ka Vb |C| (1)	An Vb |C| (1)	Ka Upper Colon (2)	An Upper Colon (2)
18	Ka B	V +	NC	Ka plus (1)	An plus (1)	An E	Ka E
19	Com An (4)	V –	Ka Com (3)	Ka minus (1)	An minus (1)	Ka AM PM	An AM PM
20	Ka Rt DP (4)	D6	Ka Com (4)	NC	NC	An AM	Ka AM

E204

Pin	h ④	j ●	k ●	l ④
1	NC	An AM	Ka j1j2	An G Dig 1
2	NC	An PM	Ka j4h3	Ka G Dig 1
3	NC	Ka AM PM	Ka h1h2	An J/H Dig 1
4	Seg B, C, DP (4) [4D-a]	An Colon	Ka k1k2	Ka J/H Dig 1
5	Seg B, C, DP (3) [3D-a]	Ka Colon	Ka f1f2	An D.P. 1
6	Seg B, C, DP (2) [2D-a]	Ka DIG 1	Ka d1d2	An D.P. 2
7	Seg B, C, DP (1) [1D-a]	Ka DIG 2	Ka c1c2	An D.P. 3
8	Seg D, DP Com (1-4) [BP3]	Ka DIG 3	Ka g1g2	An D.P. 4
9	NC	Ka DIG 4	Ka b1b2	An D Dig 2-4
10	NC	An DP	Ka e1e2	An C Dig 1-4
11	Seg A, B, F Com (1-4) [BP1]	An F	Ka a1a2	An B Dig 2-4
12	Seg A, D, G (1) [1D-b]	An G	Ka d3d4	An A Dig 2-4
13	Seg E, F (1) [1D-c]	An A	Ka e3e4	An E Dig 2-4
14	Seg A, D, G (2) [2D-b]	An B	Ka c3c4	An F Dig 2-4
15	Seg E, F (2) [2D-c]	An C	Ka g3g4	An G Dig 2-4
16	Seg A, D, G (3) [3D-b]	An D	Ka b3b4	Ka Dig 1
17	Seg E, F (3) [3D-c]	An E	Ka f3f4	Ka Dig 2
18	Seg A, D, G (4) [4D-b]	Ka AM FM	Ka a3a4	NC
19	Seg E, F (4) [4D-c]	An FM	Com An2 An4	Ka Dig 3
20	Seg D, DP Com (1-4) [BP2]	An AM	Com An1 An3	Ka Dig 4

48. SCHEMATIC DRAWINGS

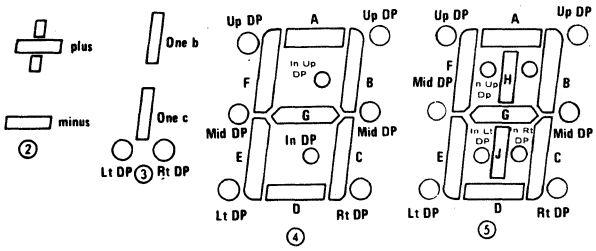

E205

Pin	a[16] ②④	b[17] ③④
1	An E	An Z |G| (1)
2	An Lft DP	Ka Z |G| (1)
3	Ka (1)	An Va |H| (1)
4	NC	Ka Vb |J| (1)
5	Ka (2)	An Rt DP (2)
6	Ka (3)	An Rt DP (3)
7	NC	An Rt DP (4)
8	Ka (4)	An Rt DP (5)
9	An C	An D
10	An D	An C
11	An A	An B
12	An F	An A
13	Ka (4)	An E
14	Ka (½)	An F
15	Ka (3)	An G
16	Ka (2)	Ka Com (2)
17	Ka (±)	Ka Com (3)
18	Ka (1)	NC
19	An G	Ka Com (4)
20	An B	Ka Com (5)

E208

Pin	a④
1	NC
2	Ka Dig 4
3	Ka Dig 3
4	Ka Dig 2
5	Ka Dig 5
6	Ka Dig 6
7	Ka Dig 7
8	Ka Dig 8
9	Ka Dig 9
10	Ka Dig 10
11	NC
12	An Seg A
13	An Seg B
14	An Seg C
15	An Seg D
16	An D.P.
17	An Seg G
18	An Seg F
19	An Seg E
20	NC

E2012

Pin	a ④	b ④	c ④
1	Ka (1)	Ka (1)	An Seg A
2	Ka (4)	Ka (2)	An Seg F
3	Ka (3)	Ka (3)	An Seg B
4	Ka (2)	An Seg C	An Seg C
5	Ka (5)	Ka (4)	An Seg D
6	Ka (6)	An DP	An Seg DP
7	Ka (7)	Ka (5)	An Seg E
8	Ka (8)	An Seg A	An Seg G
9	Ka (9)	Ka (6)	Ka (3)
10	Ka (10)	An Seg E	Ka (2)
11	Ka (11)	Ka (7)	Ka (4)
12	An A Seg	An Seg D	Ka (1)
13	An B Seg	Ka (8)	Ka (5)
14	An C Seg	An Seg G	Ka (12)
15	An D Seg	Ka (9)	Ka (6)
16	An Rt DP	An Seg B	Ka (11)
17	An G Seg	Ka (10)	Ka (7)
18	An F Seg	An Seg F	Ka (10)
19	An E Seg	Ka (11)	Ka (9)
20	Ka (12)	Ka (12)	Ka (8)

E214

Pin	a ⑤
1	An AM
2	An PM
3	Ka PM
4	Ka AM
5	An F
6	An H
7	An A
8	An E
9	An D
10	An I
11	Ka (1)
12	Ka (2)
13	Ka Lwr Cln
14	Ka Up Cln
15	Ka (3)
16	Ka (4)
17	An C
18	An G
19	An B
20	An Lwr Cln
21	An Up Cln

48. SCHEMATIC DRAWINGS

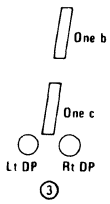

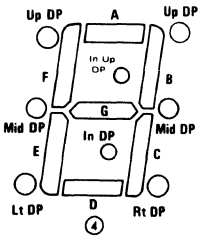

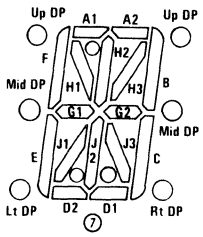

E223

Pin	a ●
1	An G
2	1c
3	1d
4	An F
5	An E
6	2b
7	2d
8	An C
9	3a
10	3c
11	3e
12	An B
13	3d
14	3b
15	An A
16	2e
17	2c
18	2a
19	An D
20	1e
21	1b
22	1a

E224

Pin	a ●	b ⑦	c	d ③④	e ③④
1	An G1	An G1	CE1	An AM/PM	Ka AM/PM
2	An In DP	An In DP	CE2	Ka AM	An AM
3	Com Ka (1)	Ka (1)	CE3	Ka PM	An PM
4	An D2	An D2	CE4	An A	An C
5	An L	An L	CLR	An B	An E
6	Com Ka (3)	Ka (3)	Vcc	Ka (1)	An G
7	An E	An E	A0	Ka (2)	Ka (1)
8	An M	An M	A1	An C	Ka (2)
9	An K	An K	WR	An D	An F
10	Com Ka (4)	Ka (4)	CU	Ka (3)	NC
11	An D1	An D1	CUE	NC	NC
12	An J	An J	Gnd	NC	NC
13	NC	An Co	NC	NC	An DP (3)
14	An G2	An G2	BL	An DP (3)	Ka DP (3)
15	An A2	An A2	NC	Ka DP (3)	An A
16	An I	An I	D0	Ka (4)	An B
17	Com Ka (2)	Ka (2)	D1	An E	Ka (4)
18	An B	An B	D2	An G	Ka (3)
19	An A1	An A1	D3	An F	An D
20	An C	An C	D4	Ka MHz	Ka MHz/KHz
21	An H	An H	D5	Ka KHz	An MHz
22	An F	An F	D6	An MHz/KHz	An KHz

E228

Pin	a ⑦
1	c8
2	La
3	c6
4	Da
5	Ca
6	G1a
7	Ma
8	c4
9	Ea
10	Na
11	c2
12	c1
13	Ha
14	Aa
15	c3
16	Ba
17	C2a
18	Ka
19	c5
20	Ja
21	Fa
22	c7

E2214

Pin	a ④	b ④
1	Ka (1)	Ka (1)
2	Ka (2)	Ka (2)
3	Ka (3)	Ka (3)
4	An Seg C	Ka (4)
5	Ka (4)	An C
6	An DP	Ka (5)
7	Ka (5)	An DP
8	An Seg A	Ka (6)
9	Ka (6)	An A
10	An Seg E	Ka (7)
11	Ka (7)	An E
12	An Seg D	Ka (8)
13	Ka (8)	An D
14	An Seg G	Ka (9)
15	Ka (9)	An G
16	An Seg B	Ka (10)
17	Ka (10)	An B
18	An Seg F	Ka (11)
19	Ka (11)	An F
20	Ka (12)	Ka (12)
21	Ka (13)	Ka (13)
22	Ka (14)	Ka (14)

E2315

Pin	a ④
1	Ka Digit 1
2	Ka Digit 2
3	Ka Digit 3
4	Ka Digit 4
5	An Seg DP
6	Ka Digit 5
7	An Seg C
8	Ka Digit 6
9	An Seg e
10	Ka Digit 7
11	An Seg a
12	Ka Digit 8
13	An Seg g
14	Ka Digit 9
15	An Seg d
16	Ka Digit 10
17	An Seg f
18	Ka Digit 11
19	An Seg b
20	Ka Digit 12
21	Ka Digit 13
22	Ka Digit 14
23	Ka Digit 15

48. SCHEMATIC DRAWINGS

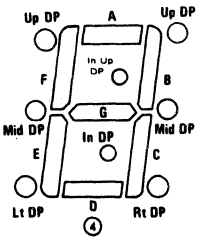

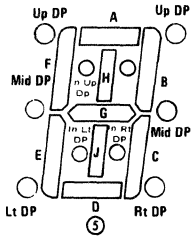

E242

Pin	a ⑤	b ④	c ④	d ④	e ④
1	NC	An G	Ka G	An E (1)	Ka E (1)
2	Ka J (1)	Com Ka (1)	Com An (1)	NC	NC
3	NC	An E	Ka E	An D (1)	Ka D (1)
4	Ka C (1)	NC	NC	An C (1)	Ka C (1)
5	Com An (1)	NC	NC	An C (1)	Ka C (1)
6	Ka Rt DP (1)	NC	NC	An Rt DP	Ka Rt DP
7	NC	NC	NC	NC	NC
8	Ka E (2)	NC	NC	An E (2)	Ka E (2)
9	Ka D (2)	An D	Ka D	An D (2)	Ka D (2)
10	Ka C (2)	Com Ka (2)	Com An (2)	An C (2)	Ka C (2)
11	Com An (2)	An Rt DP	Ka Rt DP	Com Ka (2)	Com An (2)
12	Ka Rt DP (2)	An C	Ka C	An Rt DP (2)	Ka Rt DP (2)
13	Ka B (2)	An B	Ka B	An B (2)	Ka B (2)
14	Ka A (2)	NC	NC	An A (2)	Ka A (2)
15	Ka F (2)	NC	NC	An F (2)	Ka F (2)
16	Ka G (2)	NC	NC	An G (2)	Ka G (2)
17	NC	NC	NC	NC	NC
18	Ka G (1)	An A	Ka A	An G (1)	Ka G (1)
19	Ka B (1)	NC	NC	An B (1)	Ka B (1)
20	NC	NC	NC	An A (1)	Ka A (1)
21	Ka H (1)	NC	NC	NC	NC
22	NC	NC	NC	An F (1)	Ka F(1)
23	NC	An F	Ka F	NC	NC
24	NC	NC	NC	NC	NC

E244

Pin	a ④	b ④
1	Ka PM	Ka PM
2	Ka Dot 3	Ka Dot 3
3	Ka U Colon	Ka U Colon
4	Ka L Colon	Ka L Colon
5	Ka E	NC
6	Ka A	NC
7	Ka B	Ka B
8	Ka F	NC
9	Ka C	Ka C
10	Ka G	NC
11	Ka D	NC
12	Ka Dot 2	Ka Dot 2
13	Ka Dot 1	Ka Dot 1
14	An Dot 1	An Dot 1
15	An Dot 2	An Dot 2
16	An Unit M Com	An Unit M Com
17	An 10's M Com	An 10's M Com
18	An U Colon	An U Colon
19	An Unit H Com	An Unit H Com
20	An 10's H Com	An 10's H Com
21	An L Colon	An L Colon
22	An Dot 3	An Dot 3
23	An AM & PM Com	An AM & PM Com
24	Ka AM	Ka AM

Continued on next page

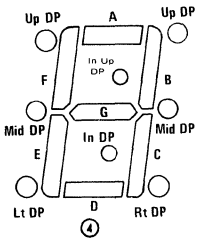

E244

Pin	c ④	d ④	e ④	f ④	g ④	h ④	i ④
1	An PM	An PM	Ka PM	An PM			An AM
2	An Dot 3	An Dot 3	An Com (1)	Ka Com (1)	Ka Com (1)	An Com (1)	An b, C (1)
3	An U Colon	An U Colon	Ka D	An D	An D	Ka D	An F (2)
4	An L Colon	An L Colon	Ka Rt DP 1	An Rt DP 1			An G (2)
5	An E	NC	An Com (2)	Ka Com (2)	Ka Com (2)	An Com (2)	An A (2)
6	An A	NC	Ka L Colon	An L Colon	An L Colon	Ka L Colon	An B (2)
7	An B	An B	Ka U Colon	An U Colon	An U Colon	Ka U Colon	An D (2)
8	An F	NC	An Com (3)	Ka Com (3)	Ka Com (3)	An Com (3)	An C (2)
9	An C	An C	Ka Rt DP 2	An Rt DP 2	An DP (1) 5-1	Ka DP (1) 5-1	An E (2)
10	An G	NC	An Com (4)	Ka Com (4)	Ka Com (4)	An Com (4)	An F (3)
11	An D	NC	Ka E	An E	An E	Ka E	An G (3)
12	An Dot 2	An Dot 2	Ka Alarm	An Alarm	An 5-2	Ka 5-2	An A (3)
13	An Dot 1	An Dot 1	An FM, Alarm	Ka FM Alarm	Ka 5-1, 5-2	An 5-1, 5-2	An B (3)
14	Ka Dot 1	Ka Dot 1	Ka FM	An FM			An E (3)
15	Ka Dot 2	Ka Dot 2	Ka A	An A	An A	Ka A	An C (3)
16	Ka Unit M Com	Ka Unit M Com	An Rt DP 2	Ka Rt DP 2	Ka DP (1)	An DP (1)	An F (4)
17	Ka 10's Com	Ka 10's M Com	An U/L Colon	Ka U/L Colon	Ka U/L Colon	An U/L Colon	An G (4)
18	Ka U Colon	Ka U Colon	Ka F	An F	An F	Ka F	An A (4)
19	Ka Unit H Com	Ka Unit H Com	Ka B	An B	An B	Ka B	An B (4)
20	Ka 10's H com	Ka 10's H Com	Ka C	An C	An C	Ka C	An E (4)
21	Ka L Colon	Ka L Colon	An Rt DP 1	Ka Rt DP 1			An C (4)
22	Ka Dot 3	Ka Dot 3	Ka G	An G	An G	Ka G	An D (4)
23	Ka AM & PM Com	Ka AM & PM Com	Ka AM	An AM	An AM	Ka AM	Com An
24	An AM	An AM	An AM, PM	Ka AM, PM	Ka AM	An AM	An Cln

Continued on next page

48. SCHEMATIC DRAWINGS

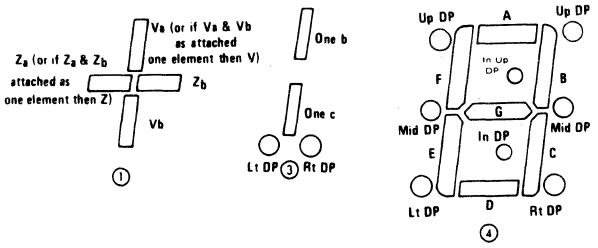

E244

Pin	j ④	k ④	l ④	m ④
1	Ka D3	An D3	An L3	Ka PM/Dig 1-4
2	Ka D2	An D2	Com Ka Dig 1	Ka Dig 1-4
3	Com An Dig 1	Com Ka Dig 1	An D Dig 1-4	Ka AM
4	Ka D	An D	An L2	An AM
5	Com An Dig 2	Com Ka Dig 2	Com Ka Dig 2	An PM
6	Ka D5	An D5	Ka UC/LC	An B Dig1
7	Ka D4	An D4	An UC/LC	An A Dig 1
8	Com An Dig 3	Com Ka Dig 3	Com Ka Dig 3	An D/E Dig 1
9	Ka D6	An D6	An D.P. 1	An C Dig 1 E Dig 2
10	Com An Dig 4	Com Ka Dig 4	Com Ka Dig 4	An B/G Dig 2
11	Ka C	Ka C	An E Dig 2-4	An C/D Dig 2
12	Ka D8	Ka D8	An D.P. 2	An A/F Dig 2
13	An D7/D8	Ka D7/D8	Ka U.D.P.	An A/F Dig 3
14	An D7	Ka D7	Ka D.P. 2	An B/G Dig 3
15	An A	Ka A	An U.D.P.	An C/D Dig 3
16	An D6	Ka D6	Ka D.P. 1	An E Dig 3/4
17	An D4	Ka D4	An A Dig 1-4	An B/G Dig 4
18	An D5	Ka D5	An F Dig 1-4	An C/D Dig 4
19	An B	Ka B	An B Dig 1-4	An A/F Dig 4
20	An F	Ka F	An C Dig 1-4	Ka Dig 1-4
21	An E	Ka E	An E Dig 1	Ka AL
22	An G	Ka G	An G Dig 1-4	An AL
23	An D1	Ka D1	An L1	NC
24	An D1/D2/D3	Ka D1/D2/D3	Ka L1/L2/L3	An UC/LC

E245

Pin	a ①③	b ④	c ④	d ④
1	An Va [H] (1)	BP	BP	An L3
2	Ka Va [H] (1)	½ Dig	H	Ka Dig 1
3	An Vb [J] (1)	E1	E1	An D Dig 1-4
4	Ka Vb [J] (1)	D1	D1	An L2
5	Ka Z [G] (1)	C1	C1	Ka Dig 2
6	An Z [G] (1)	Cln	DP	Ka UC/LC
7	An Rt DP (1)	E2	E2	An UC/LC
8	Ka Rt DP (1)	D2	D2	Ka Dig 3
9	Ka One c [C] (1)	C2	C2	An D.P.
10	An One c [C] (1)	E3	E3	Ka Dig 4
11	Ka One b [B] (1)	D3	D3	An E Dig 2-4
12	An One b [B] (1)	C3	C3	An B/C Dig 5
13	An (2)	B3	B3	Ka U.D.P.
14	An (3)	A3	A3	Ka Dig 5
15	Ka G	F3	F3	An U.D.P.
16	Ka F	G3	G3	Ka D.P.
17	Ka E	B2	B2	An A Dig 1-4
18	Ka D	A2	A2	An F Dig 1-4
19	An (4)	F2	F2	An B Dig 1-4
20	An (5)	G2	G2	An C Dig 1-4
21	Ka Rt DP	B1	B1	An E Dig 1
22	Ka C	A1	A1	An G Dig 1-4
23	Ka B	F1	F1	An L1
24	Ka A	G1	G1	Ka L1/L2/L3

48. SCHEMATIC DRAWINGS

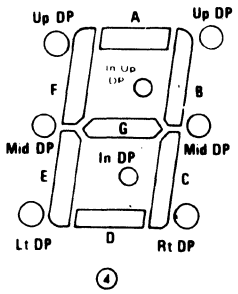

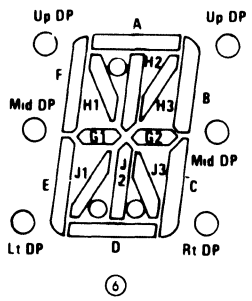

E248

Pin	a ⑥
1	Ka (1)
2	Ka (2)
3	Ka (3)
4	An D
5	Ka (4)
6	Ka (5)
7	An J
8	Ka (6)
9	An In DP
10	Ka (7)
11	An M
12	Ka (8)
13	NC
14	An N
15	An C
16	An E
17	An G 2
18	An G 1
19	An B
20	An L
21	An F
22	An K
23	An H
24	An A

EB664

Pin	a ④	b ④	c ④	d ④	e ④
1	Binary 16	Binary 32	Binary 32	Binary 32	An Pad A
2	Binary 4	Binary 8	Binary 8	Binary 8	Ka Dig 2
3	Binary 1	Binary 2	Binary 2	Binary 2	Ka Dig 3
4	#1 Aux. Data	-12V	-12V	-12V	Ka Dig 4
5	#3 Aux. Data	CLEAR	CLEAR	CLEAR	Ka Dig 5
6	#5 Aux. Data	NC	NC	Binary 64	An D.P.
7	#6 Aux. Data	Write Cycle	Write Cycle	Write Cycle	Ka Dig 6
8	NC	Blank Dis.	Blank Dis.	Blank Dis.	An Seg C
9	Count Control	NC	NC	NC	Ka Dig 7
10	Blank Dis	+250V	+250V	+250V	An Seg E
11	NC	NO PIN	NO PIN	NO PIN	Ka Dig 8
12	+250V	NO PIN	NO PIN	NO PIN	An Seg A
13	Binary 32	Binary 16	Binary 16	Binary 16	Ka Dig 9
14	Binary 8	Binary 4	Binary 4	Binary 4	An Seg G
15	Binary 2	Binary 1	Binary 1	Binary 1	Ka Dig 10
16	-12V	Data Present	Data Present	Data Present	An Seg D
17	#2 Aux. Data	NC	Back Space	Back Space	Ka Dig 11
18	#4 Aux. Data	Data Taken	Data Taken	Data Taken	An Seg F
19	#7 Aux. Data	NC	NC	NC	Ka Dig 12
20	Count Update	+5V	+5V	+5V	An Seg B
21	CLOCK	NC	NC	NC	Ka Dig 13
22	+5V	GND	GND	GND	Ka Dig 14
23	RESET	NO PIN	NO PIN	NO PIN	Ka Dig 15
24	GND	NO PIN	NO PIN	NO PIN	Ka Pad B

48. SCHEMATIC DRAWINGS

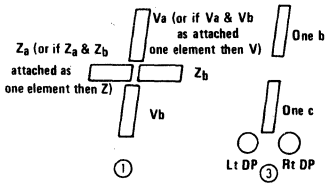

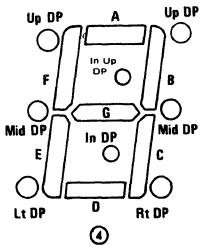

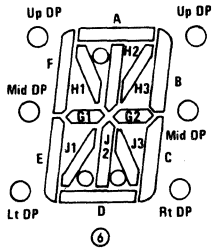

E254

Pin	a ④	b ④
1	Ka AM	An AM
2	Ka PM	An PM
3	An AM	Ka AM
4	An PM	Ka PM
5	An B	Ka B
6	An F	Ka F
7	An A	Ka A
8	An E	Ka E
9	Ka (1)	An (1)
10	Ka (2)	An (2)
11	Ka Low Colon	An Low Colon
12	An Colon	Ka Colon
13	NC	NC
14	An D	Ka D
15	Ka Up Colon	An Up Colon
16	Ka DP (3)	An DP (3)
17	An DP	Ka DP
18	Ka (4)	An (4)
19	NC	NC
20	An G	Ka G
21	An C	Ka C
22	Ka FM	An FM
23	Ka ST	An ST
24	An ST	Ka ST
25	An FM	Ka FM

E264

Pin	a ①③	b③④	c ④
1	A.M.	Com Ka	An B (1) AM
2	An One b,c [bc] (1)	An PM	An C (1)
3	An F (2)	An G (2)	An F (2)
4	An G (2)	An D (2)	An G (2)
5	An A (2)	An C (2)	An A (2)
6	An B (2)	An E (2)	An B (2)
7	An D (2)	An CLN	An D (2)
8	An C (2)	An G (3)	An C (2)
9	An E (2)	An AD (3)	An E (2)
10	An F (3)	An F (3)	An F (3)
11	An G (3)	An C (3)	An G (3)
12	An A, D (3)	An E (4)	An A,D (3)
13	An B (3)	An D (4)	An B (3)
14	An E (3)	An C (4)	An E (3)
15	An C (3)	An AL	An C (3)
16	An F (4)	An B (4)	An F (4)
17	An G (4)	An A (4)	An G (4)
18	An A (4)	An G (4)	An A (4)
19	An B (4)	An F (4)	An B (4)
20	An E (4)	An B (3)	An E (4)
21	An Colon (4)	An F (3)	Set
22	Com Ka	An B (2)	Com Ka
23		An A (2)	An D (4)
24		An F (2)	An C (4)
25	An D (4)	An B C (1)	An CLN
26	An C (4)	An AM	An ADEG (1)

E268

Pin	a ⑥
1	An G 1
2	An DP
3	Ka (1)
4	An D 2
5	An L
6	Ka (3)
7	An E
8	An M
9	An K
10	Ka (4)
11	An D 1
12	Ka (6)
13	Ka (8)
14	Ka (7)
15	Ka (5)
16	An J
17	An Co
18	An G 2
19	An A 2
20	An I
21	Ka (2)
22	An B
23	An A 1
24	An C
25	An H
26	An F

48. SCHEMATIC DRAWINGS

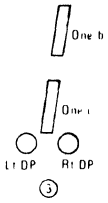

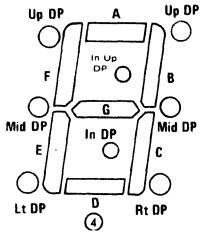

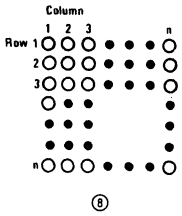

E274

Pin	a 3 4
1	Ka AM
2	Ka PM
3	Ka C (1)
4	Ka B (1)
5	Ka F (2)
6	Ka E (2)
7	Ka D (2)
8	Ka C (2)
9	Ka G (2)
10	Ka B (2)
11	Ka A (2)
12	Ka A (3)
13	Ka F (3)
14	Ka G (3)
15	Ka E (3)
16	Ka D (3)
17	Ka C (3)
18	Ka B (3)
19	Ka DP (3)
20	Ka A (4)
21	Ka F (4)
22	KA E (4)
23	Ka D (4)
24	Ka C (4)
25	Ka G (4)
26	Ka B (4)
27	Com An

E284

Pin	a 4	b 4	c 4	d 8	e 4	f 4
1	NC	An AM	Ka AM/PM	NC	An AM/PM	Ka AM In
2	1 c	An PM	An AM/PM	Col 1	Ka AM/PM	Ka PM In
3	1 e	Ka AM/PM	An Com A	Col 1	Ka A	An
4	An G	Ka F (1, 2)	Ka Com Unit Hour	Col 2	Com An (2)	Ka F (1) (2)
5	2 b	An Com (1, 3)	Ka Com 10's Hour	Col 2	Com An (1)	Com An (1)
6	2 d	Ka G (1, 2)	An Com E	Col 3	Ka E	Ka G (1) (2)
7	An D	Ka E (1, 2)	An Com D	Col 3	Ka D	Ka E (1) (2)
8	An E	Ka D (1, 2)	Ka Com Colon	Col 4	An Colon	Ka D (1) (2)
9	3 c	Ka C (1, 2)	An Com Colon	Col 4	Ka Colon	Ka C (1) (2)
10	3 d	An Com (2, 4)	NC	Col 5		Com An (2)
11	An F	Ka B (1, 2)	NC	Col 5		Ka B (1) (2)
12	4 b	Ka A (1, 2)	NC	Int Con [2]		Ka A (1) (2)
13	4 d	An Up Colon	NC	Int Con [2]		An
14	4 e	Ka Up Colon	NC	NC		Cln
15	An C	Ka Low Colon	NC	NC		An
16	4 c	An Low Colon	NC	Dout		Cln
17	4 a	An Com (1, 3)	NC	Dout		Com An (3)
18	An B	Ka A (3, 4)	NC	VB		Ka A (3) (4)
19	3 e	Ka F (3, 4)	NC	VB		Ka F (3) (4)
20	3 b	Ka E (3, 4)	NC	Vcc		Ka E (3) (4)
21	3 a	Ka D (3, 4)	An Com C	Vcc	Ka C (1)	Ka D (3) (4)
22	2 e	Ka C (3, 4)	Ka Com 10's min	Clk	Com An (3)	Ka C (3) (4)
23	2 c	Ka G (3, 4)	Ka Com Unit min	Clk	Com An (4)	Ka G (3) (4)
24	2 a	An Com (2, 4)	An Com G	Gnd	Ka G (1)	Com An (4)
25	An A	Ka B (3, 4)	An Com B	Gnd	Ka B (1)	Ka B (3) (4)
26	1 d	An Com (2, 4)	An Com F	Din	Ka F (1)	Com An (4)
27	1 b	An Com (1, 3)	Ka Sleep/Alr	Din	An ALM	Com An (1)
28	1 a	Ka Alarm	An Sleep/Alr	NC	Ka ALM	In

Continued on next page

48. SCHEMATIC DRAWINGS

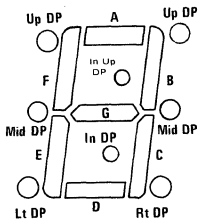

④

E284

Pin	g ④	h ④	i ④	j ④	k ④	l ④	m ④
1	An AM In	An AM	Ka AM	An B (1) AM	Ka AM	An AM	An AM
2	An PM In	An PM	Ka PM	An C (1)	Ka PM	An PM	An PM
3	Ka	KA AM/PM	An AM/PM	An F (2)	Ka C (1)	Ka AM/PM	Ka AM/PM
4	An F (1) (2)	Ka F (1,2)	An F (1,2)	An G (2)	Ka B (1)	Ka F Dig 1/2	Ka F Dig 1/2
5	Com Ka (1)	An Com (1,3)	Ka Com (1,3)	An A (2)	Ka F (2)	An Dig 1	An Dig 1/3
6	An G (1) (2)	Ka G (1,2)	An G (1,2)	An B (2)	Ka E (2)	Ka G Dig 1/2	Ka G Dig 1/2
7	An E (1) (2)	Ka E (1,2)	An E (1,2)	An D (2)	Ka D (2)	Ka E Dig 1/2	Ka E Dig 1/2
8	An D (1) (2)	Ka D (1,2)	An D (1,2)	An C (2)	Ka C (2)	Ka D Dig 1/2	Ka D Dig 1/2
9	An C (1) (2)	Ka C (1,2)	An C (1,2)	An E (2)	Ka G (2)	Ka C Dig 1/2	Ka C Dig 1/2
10	Com Ka (2)	An Com (2,4)	Ka Com (2,4)	An F (3)	Ka B (2)	An Dig 2	An Dig 2/4
11	An B (1) (2)	Ka B (1,2)	An B (1,2)	An G (3)	Ka A (2)	Ka B Dig 1/2	Ka B Dig 1/2
12	An A (1) (2)	Ka A (1,2)	An A (1,2)	An AD (3)	Ka A (3)	Ka A Dig 1/2	Ka A Dig 1/2
13	Ka	An Up Colon	Ka Up Colon	An B (3)	Ka F (3)	An UC	An UC
14	Cln	Ka Up Colon	An Up Colon	An E (3)	Ka G (3)	Ka UC	Ka UC
15	Ka	Ka Low Colon	An Low Colon	An C (3)	Ka E (3)	Ka LC	Ka LC
16	Cln	An Low Colon	Ka Low Colon	An F (4)	Ka D (3)	An LC	An LC
17	Com Ka (3)	An Com (1,3)	Ka Com (1,3)	An G (4)	Ka C (3)	An Dig 3	An Dig 1/3
18	An A (3) (4)	Ka A (3,4)	An A (3,4)	An A (4)	Ka B (3)	Ka A Dig 3/4	Ka A Dig 3/4
19	An F (3) (4)	Ka F (3,4)	An F (3,4)	An B (4)	Ka DP (3)	Ka F Dig 3/4	Ka F Dig 3/4
20	An E (3) (4))	Ka E (3,4)	An E (3,4)	An E (4)	Ka A (4)	Ka E Dig 3/4	Ka E Dig 3/4
21	An D (3) (4)	Ka D (3,4)	An D (3,4)	SET	Ka F (4)	Ka D Dig 3/4	Ka D Dig 3/4
22	An C (3) (4)	Ka C (3,4)	An C (3,4)	Com Ka	Ka E (4)	Ka C Dig 3/4	Ka C Dig 3/4
23	An G (3) (4)	Ka G (3,4)	An G (3,4)	An D (4)	Ka D (4)	Ka G Dig 3/4	Ka G Dig 3/4
24	Com Ka (4)	NC	NC	An C (4)	Ka C (4)	An Dig 4	An Dig 2/4
25	An B (3) (4)	Ka B (3,4)	An B (3,4)	Slow	Ka G (4)	Ka B Dig 3/4	Ka B Dig 3/4
26	Com Ka (4)	An Com (2,4)	Ka Com (2,4)	Fast	Ka B (4)	An Dig 4	An Dig 2/4
27	Com Ka (1)	An Com (1,3)	Ka Com (1,3)	An CLN	Com An	An Dig 1	An Dig 1/3
28	In	Ka Alarm	An Alarm	An AEGD(1)	Ka AL	Ka AL	Ka AL

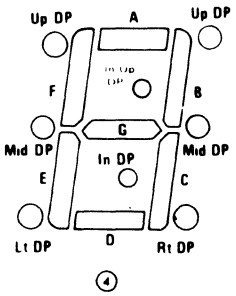

E294

Pin	a ④	b ④	c ④	d ④	e ④	f ④	g ④	h ④
1	Ka Com AM/PM	Com An	Com Ka	Com An	Com Ka	An AM/PM	Ka AM/PM	Com Ka
2		Ka A.M.	An A.M.	Ka A.M.	An A.M.	Ka AM	An PM	Com Ka
3	An PM	Ka P.M.	An P.M.	Ka P.M.	An P.M.	Ka PM	An AM	Ka AM
4	An Com A	Ka A	An A	Ka A	An A	Ka A	An A Dig 1-4	An AM
5	Ka Com Unit Hour	Com An	Com Ka	Com An	Com Ka	An (2)	Ka Dig 2	An PM
6	Ka Com 10's Hour	Com An	Com Ka	Com An	Com Ka	An (1)	Ka Dig 1	An B Dig 1
7	An Com E	Ka E	An E	Ka E	An E	Ka E	An E Dig 1-4	An A/G Dig 1
8	An Com D	Ka D	An D	Ka D	An D	Ka D	An D Dig 1-4	An D/E Dig 1
9	Ka Com Colons	Com An	Kom Ka	Com An	Kom Ka	An CLN	Ka UC/LC	An C Dig 1 E Dig 2
10	An Com Colons	Dot 1	Dot 1			Ka CLN	An UC/LC	An B/G Dig 2
11	NC	Com An	Com Ka			NC	NC	NC
12	NC	Lwr Colon	Lwr Colon			NC	NC	An C/D Dig 2
13	NC					NC	NC	An A/F Dig 2
14	NC					NC	NC	NC
15	NC					NC	NC	An A/F Dig 3
16	NC					NC	NC	An B/G Dig 3
17	NC	Ka C	An C			NC	NC	An C/D Dig 3
18	NC	Com An	Com An			NC	NC	An E Dig 3-4
19	NC	Dot 2	Dot 2			NC	NC	An B/G Dig 4
20	NC	Com An	Com Ka			NC	NC	An C/D Dig 4
21	NC	Com An	Com Ka			NC	NC	An A/F Dig 4
22	An Com C	Ka G	An G	Ka C	An C	Ka C	An C Dig 1-4	NC
23	Ka Com 10's min	Ka B	An B	Com An	Com Ka	An (3)	Ka Dig 3	NC
24	Ka Com Unit min	Ka F	An F	Com An	Com Ka	An (4)	Ka Dig 4	NC
25	An Com G	Ka A.M.	An A.M.	Ka G	An G	Ka G	An G Dig 1-4	NC
26	An Com B	Ka F.M.	An F.M.	Ka B	An B	Ka B	An B Dig 1-4	Com Ka
27	An Com F	Com An	Com Ka	Ka F	An F	Ka F	An F Dig 1-4	An AL
28	Ka Sleep Alr	Up Colon	Up Colon	Com An	Com Ka	An AL	Ka D.P.	Ka AL
29	An Sleep/Alr	Com An	Com Ka	Ka ALM	An ALM	Ka AL	An D.P.	Com Ka

48. SCHEMATIC DRAWINGS

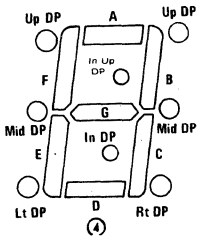

E295

Pin	a ④
1	An F
2	An AM
3	Ka AM/PM
4	An PM
5	An (X)
6	An (Y)
7	Ka (1)
8	Ka DP (1)
9	An DP (1)
10	Ka (2)
11	An D
12	Ka (2) DP
13	An (2) DP
14	Ka (3)
15	An Up Colon
16	An Low Colon
17	Ka DP (3)
18	An DP (3)
19	Ka (4)
20	An C
21	Ka DP (4)
22	An DP (4)
23	An E
24	Ka (5)
25	Ka DP (5)
26	An DP (5)
27	An G
28	An B
29	An A

E304

Pin	a ④	b ④	c ④	d ④	e ④
1	An Com	An Com (1)	An Com (1)	Ka Com	Ka Com
2	An Com	An Com (2)	An Com (2)	Ka Com	Ka Com
3	An AM	NC	NC	Ka AM	Ka AM
4	Ka AM	NC	NC	An AM	An AM
5	Ka PM	NC	Ka PM	An PM	An PM
6	Ka B (1)	Ka B (1)	Ka B (1)	An B (1)	An B (1)
7	Ka A, G (1)	Ka A, G (1)	NC	An A, G (1)	
8	Ka D, E (1)	Ka D, E (1)	NC	An D, E (1)	
9	Ka C (1) Ka E (2)	Ka C (1) Ka E (2)	Ka C (1) Ka E (2)	An C (1), E (2)	An C (1), E (2)
10	Ka B, G (2)	Ka B, G (2)	Ka B, G (2)	An B (2)	An B (2)
11	NC	NC	NC		
12	Ka C, D (2)	Ka C, D (2)	Ka C, D (2)	An C, D (2)	An C, D (2)
13	Ka F, A (2)	Ka A, F (2)	Ka A, F (2)	An A, F (2)	An A, F (2)
14	NC	NC	NC		
15	Ka A, F (3)	Ka A, F (3)	Ka A, F (3)	An A, F (3)	An A, F (3)
16	Ka B, G (3)	Ka B, G (3)	Ka B, G (3)	An B, G (3)	An B, G (3)
17	Ka C, D (3)	Ka C, D (3)	Ka C, D (3)	An C, D (3)	An C, D (3)
18	Ka E (3) Ka E (4)	Ka E (3) Ka E (4)	Ka E (3) Ka E (4)	An E (3), E (4)	An E (3), E (4)
19	Ka B, G (4)	Ka B, G (4)	Ka B, G (4)	An B (4)	An B (4)
20	Ka C, D (4)	Ka C, D (4)	Ka C, D (4)	An C, D (4)	An C, D (4)
21	Ka A, F (4)	Ka A, F (4)	Ka A, F (4)	An A, F (4)	An A, F (4)
22	NC	NC	NC		
23	NC	NC	NC		
24	NC	NC	NC		
25	NC	NC	NC		
26	An Com	An Com (2)	An Com (2)	Ka Com	Ka Com
27	Ka Sleep	Ka Sleep/Alarm Dot	Ka Sleep/Alarm Dot	An Sleep	An Sleep
28	An Sleep	An Sleep/Alarm Dot	An Sleep/Alarm Dot	Ka Sleep	Ka Sleep
29	An Com	An Com (1)	An Com (1)	Ka Com	Ka Com
30	Ka Up/Low Colon	Ka Colon Dot	Ka Colon Dot	An Up/Low Colon	An Up/Low Colon

Continued on next page

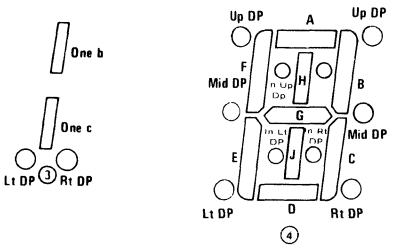

E304

Pin	f ④	g ④	h ④	i ④	j ④	k ④	l ④	③④m
1	Ka Com	Com Ka A (1)	Com An A (1)	Com An 1	Com Ka 1	An	Ka	g (1)
2	Ka Com	Ka G (1)	An G (1)	Com An 2	Com Ka 2	Ka AM In	An AM In	pm
3				An	Ka	Ka PM In	An PM In	e (1)
4				Ka	An	Ka	An A	d (1)
5		An AM/PM	Ka AM/PM	Ka PM In	An PM In	An	Ka	c (1)
6	An B (1)	An B (1)	Ka B (1)	Ka B (1)	An B (1)	An	Ka	g (2)
7	An A, G (1)	An A/G (1)	Ka AG (1)	Ka A, G (1)	An A, G (1)	Ka E	An E	e (2)
8	An D, E (1)	An D, E (1)	Ka D, E (1)	Ka D, E (1)	An D, E (1)	Ka D	An D	d (2)
9	An C (1), E (2)	An C (1) An E (2)	Ka C (1) E (2)	Ka C (1) E (2)	An C (1) E (2)	An	Ka	c (2)
10	An B (2)	An B, G (2)	Ka B, G (2)	Ka B, G (2)	An B, G (2)	Cln	Cln	g (3)
11		NC		NC	NC			e (3)
12	An C, D (2)	An C, D (2)	Ka C, D (2)	Ka C, D (2)	An C, D (2)			d (3)
13	An A, F (2)	An A, F (2)	Ka A, F (2)	Ka A, F (2)	An A, F (2)			c (3)
14				NC	NC			al
15	An A, F (3)	An A, F (3)	Ka A, F (3)	Ka A, F (3)	An A, F (3)			lmp
16	An B, G (3)	An B, G (3)	Ka B, G (3)	Ka B, G (3)	An B, G (3)			am
17	An C, D (3)	An C, D (3)	Ka C, D (3)	Ka C, D (3)	An C, D (3)			ab
18	An E (3), E (4)	An E (3) E (4)	Ka E (3) E (4)	Ka E (3) E (4)	An E (3) E (4)			f (1)
19	An B (4)	An B (4)	Ka B (4)	Ka B, G (4)	An B, G (4)			a (1)
20	An C, D (4)	An C, D (4)	Ka C, D (4)	Ka C, D (4)	An C, D (4)			b (1)
21	An A, F (4)	An A, F (4)	Ka A, F (4)	Ka A, F (4)	An A, F (4)			col
22				NC	NC	Ka C	An C	f (2)
23				NC	NC	An	Ka	a (2)
24				NC	NC	An	Ka	b (2)
25				NC	NC	Ka G	An G	f (3)
26	Ka Com	Ka G (1)	An G (1)	Com An 2	Com Ka 2	Ka B	An B	a (3)
27	An Sleep	An ALM	Ka ALM	Ka	An	Ka F	An F	b (3)
28	Ka Sleep	Ka ALM	An ALM	An	Ka	An	Ka	sz
29	Ka Com	Ka A (1)	An A (1)	Com An 1	Com Ka 1	In	In	com
30	An Up/Low Colon	NC	NC	Cln	Cln			lmp

Continued on next page

48. SCHEMATIC DRAWINGS

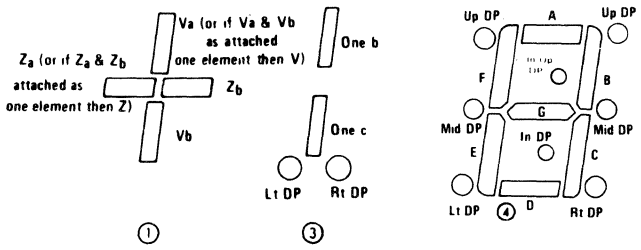

E304

Pin	③④ n	①③④ o	p ④	q	r ④	s ④	t ④	u ④
1	g (1)	z (x)	Ka Com (1)	Ka PM	An PM	Com Ka (1)	Com An (1)	Ka PM
2	c (0)	V (y)	Ka Com (2)	An PM	An AM	Com Ka (2)	Com An (2)	An PM
3	e (1)	dp (1)	NC	An DE (1)	Ka AM	Ka PM	An PM	An AM
4	d (1)	e (1)	NC	An AM	Ka PM	An PM	Ka PM	Ka AM
5	c (1)	d (1)	An PM	An AG (1)	Ka A	An AM	Ka AM	Ka A
6	g (2)	c (1)	An B (1)	An B (1)	An (2)	An B (1)	Ka B (1)	An (2)
7	e (2)	dp (2)	NC	An C (1)E (2)	An (1)	An AG (1)	Ka AG (1)	An (1)
8	d (2)	e (2)	NC	An B,G (2)	Ka E	An DE (1)	Ka DE (1)	Ka E
9	c (2)	d (2)	An C (1) An E (2)	An CD (2)	Ka D	An C (1) E (2)	Ka C (1) E (2)	Ka D
10	g (3)	c (2)	An B,G (2)	An AF (2)	An DP (1)	An BG (2)	Ka BG (2)	An CLN
11	e (3)	dp (3)	NC	An AF (3)	Ka DP (1)	NC	NC	Ka CLN
12	d (3)	e (3)	An C,D (2)	An BG (3)	An Lower CLN	An CD (2)	KA CD (2)	NC
13	c (3)	d (3)	Ka A,F (2)	An C (3) E (4)	Ka Lower CLN	An AF (2)	Ka AF (2)	NC
14	al	c (3)	NC	An E (3,4)	NC	NC	NC	NC
15	Imp	Imp	An A,F (3)	An BG (4)	NC	An AE (3)	Ka AE (3)	NC
16	adeg (0)	ab	An B,G (3)	An CD (4)	NC	An BG (3)	Ka BG (3)	NC
17	b (0)	g (1)	An C,D (3)	An AF (4)	NC	An CD (3)	Ka CD (3)	NC
18	f (1)	f (1)	An E (3) An E (4)	NC	Ka C	An E (3,4)	Ka E (3,4)	NC
19	a (1)	a (1)	An B,G (4)	NC	An DP (3)	An BG (4)	Ka BG (4)	NC
20	b (1)	b (1)	An C,D (4)	Ka AL	Ka DP (3)	An CD (4)	Ka CD (4)	NC
21	col	g (2)	An A,F (4)	An AL	An 3	An AF (4)	Ka AF (4)	NC
22	f (2)	f (2)	NC	NC	An 4	NC	NC	NC
23	a (2)	a (2)	NC	NC	Ka G	NC	NC	Ka C
24	b (2)	b (2)	NC	NC	Ka B	NC	NC	An (3)
25	f (3)	g (3)	NC	NC	Ka F	NC	NC	An (4)
26	a (3)	f (3)	Ka Com (2)	NC	Ka MHz	Com Ka (2)	Com An (2)	Ka G
27	b (3)	a (3)	An Sleep/Alarm	NC	Ka KHz	An AL	Ka AL	Ka B
28	sz	b (3)	Ka Sleep/Alarm	An CLN	An MHz/KHz	Ka AL	An AL	Ka F
29	com	com	Ka Com (1)	Com Ka	Ka Upper CLN	Com Ka (1)	Com An (1)	An AL
30	Imp	Imp	An Colon	Com Ka	An Upper CLN	An CLN	Ka CLN	Ka AL

Continued on next page

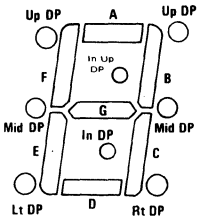

④

E304

Pin	v ④	w ④	x ④	y ④	z ④
1	An PM	Com Ka	Ka PM	Com An	Com Ka
2	Ka PM	Com Ka	Ka AM	Com An	Com Ka
3	Ka AM	Ka PM	An AM	An AM	Ka AM
4	An AM	An PM	An PM	Ka AM	An AM
5	An A	An AM	An A Dig 1-4	Ka PM	An PM
6	Ka (2)	An B (1)	Ka Dig 2	Ka B Dig 1	An B Dig 1
7	Ka (1)	An AG (1)	Ka Dig 1	Ka A/G Dig 1	An A/G Dig 1
8	An E	An DE (1)	An E Dig 1-4	Ka D/E Dig 1	An D/E Dig 1
9	An D	An CE (1)	An D Dig 1-4	Ka C Dig 1/E Dig 2	An C Dig 1 E Dig 2
10	Ka CLN	An BG (2)	Ka D.P. 1	Ka B/G Dig 2	An B/G Dig 2
11	An CLN	NC	An D.P. 1	NC	NC
12	NC	An CD (2)	Ka LC	Ka C/D Dig 2	An C/D Dig 2
13	NC	An AF (2)	An LC	Ka A/F Dig 2	An A/F Dig 2
14	NC	NC	NC	NC	NC
15	NC	An AF (3)	NC	Ka A/F Dig 3	An A/F Dig 3
16	NC	An BG (3)	NC	Ka B/G Dig 3	An B/G Dig 3
17	NC	An CD (3)	NC	Ka C/D Dig 3	An C/D Dig 3
18	NC	An E (3,4)	An C Dig 1-4	Ka E Dig 3/4	An E Dig 3/4
19	NC	An BG (4)	Ka D.P. 2	KA B/G Dig 4	An B/G Dig 4
20	NC	An CD (4)	AN D.P. 2	Ka C/D Dig 4	An C/D Dig 4
21	NC	An AF (4)	Ka Dig 3	Ka A/F Dig 4	An A/F Dig 4
22	NC	NC	Ka Dig 4	NC	NC
23	An C	NC	AN G Dig 1-4	NC	NC
24	Ka (3)	NC	An B Dig 1-4	NC	NC
25	Ka (4)	NC	An F Dig 1-4	NC	NC
26	An G	Com Ka (2)	An MHz	Com An	Com Ka
27	An B	An AL	An KHz	Ka AL	An AL
28	An F	Ka AL	Ka MHz/kHz	An AL	Ka AL
29	Ka AL	Com Ka (1)	An LC	Com An/PM	Com Ka
30	An AL	An CLN	Ka UC	Ka UC/LC	An UC/LC

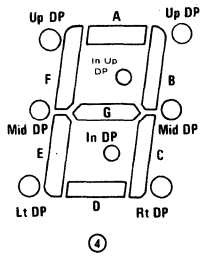

E324

Pin	a ④	b ④
1	An Com (1)	Ka Com (1)
2	An Com (2)	Ka Com (2)
3	An AM	Ka AM
4	Ka AM	An AM
5	Ka PM	An PM
6	Ka B (1)	An B (1)
7	Ka A,G (1)	An A,G (1)
8	Ka D,E (1)	An D,E (1)
9	Ka C (1) E (2)	An C (1) E (2)
10	Ka B,G (2)	Ka B,G (2)
11	NC	NC
12	Ka C,D (2)	An C,D (2)
13	Ka A,F (2)	An A,F (2)
14	NC	NC
15	Ka A,F (3)	An A,F (3)
16	Ka B,G (3)	An B,G (3)
17	Ka C,D (3)	An C,D (3)
18	Ka E (3)(4)	An E (3)(4)
19	Ka B,G (4)	An B,G (4)
20	Ka C,D (4)	An C,D (4)
21	Ka A,F (4)	An A,F (4)
22	NC	NC
23	NC	NC
24	NC	NC
25	NC	NC
26	An Com (2)	Ka Com (2)
27	Ka DP (2)	An DP (2)
28	An DP (2)	Ka DP (2)
29	An Com (1)	Ka Com (1)
30	Ka Cln	An Cln
31	Ka DP (1)	An DP (1)
32	An DP (1)	Ka DP (1)

E334

Pin	a④	b
1	Ka Com	Com An
2	An AM	NC
3	An PM	Ka AM
4	An E (1)	Ka A Dig 1
5	An D (1)	Ka F Dig 1
6	An C (1)	Ka G Dig 1
7	An G (1)	Ka E Dig 1
8	An B (1)	Ka D Dig 1
9	An A (1)	Ka C Dig 1
10	An F (2)	Ka B Dig 1
11	An E (2)	Ka F Dig 2
12	An D (2)	Ka G Dig 2
13	An C (2)	Ka A Dig 2
14	An G (2)	Ka B Dig 2
15	An B (2)	Ka E Dig 2
16	An A (2)	Ka D Dig 2
17	An Low Colon	Ka C Dig 2
18	An Up Colon	Ka UC
19	An F (3)	Ka LC
20	An E (3)	Ka F Dig 3
21	An D (3)	Ka G Dig 3
22	An C (3)	Ka A Dig 3
23	An G (3)	Ka B Dig 3
24	An B (3)	Ka D Dig 3
25	An A (3)	Ka E Dig 3
26	An F (4)	Ka C Dig 3
27	An E (4)	Ka F Dig 4
28	An D (4)	Ka G Dig 4
29	An C (4)	Ka A Dig 4
30	An Alarm	Ka B Dig 4
31	An G (4)	Ka E Dig 4
32	An B (4)	Ka D Dig 4
33	An A (4)	Ka C Dig 4

E344

Pin	k ④	m ④	n ④
1	Com Ka	Com Ka	Com An
2	An PM	An PM	Ka PM
3	An AM	An AM	Ka AM
4	An A (1)	NC	Ka A (1)
5	An F (1)	An F (1)	Ka F (1)
6	An G (1)	An G (1)	Ka G (1)
7	An E (1)	An E (1)	Ka E (1)
8	An D (1)	NC	Ka D (1)
9	An C (1)	An C (1)	Ka C (1)
10	An B (1)	An B (1)	Ka B (1)
11	An F (2)	An F (2)	Ka F (2)
12	An G (2)	An G (2)	Ka G (2)
13	An A (2)	An A (2)	Ka A (2)
14	An B (2)	An B (2)	Ka B (2)
15	An E (2)	An E (2)	Ka E (2)
16	An D (2)	An D (2)	Ka D (2)
17	An C (2)	An C (2)	Ka C (2)
18	An Cln	An Cln	An Cln
19	An Cln	An Cln	An Cln
20	An F (B)	An F (3)	Ka F (3)
21	An G (3)	An G (3)	Ka G (3)
22	An A (3)	An A (3)	Ka A (3)
23	An B (3)	An B (3)	Ka B (3)
24	An D (3)	An D (3)	Ka D (3)
25	An E (3)	An E (3)	Ka E (3)
26	An C (3)	An C (3)	Ka C (3)
27	An F (4)	An F (4)	Ka F (4)
28	An G (4)	An G (4)	Ka G (4)
29	An A (4)	An A (4)	Ka A (4)
30	An B (4)	An B (4)	Ka B (4)
31	An E (4)	An E (4)	Ka E (4)
32	An D (4)	An D (4)	Ka D (4)
33	An C (4)	An C (4)	Ka C (4)
34	Com Ka	Com Ka	Com An

Continued on next page

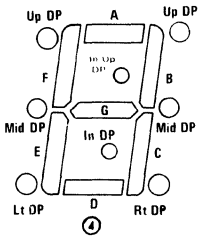

E344

Pin	o ④	s ④	t ④	u ④	V ④	w ④	x ④
1	Com An	Ka Com	Com Ka	Com An	Com Ka	Com Ka	Com An
2	Ka PM	An P.M.	An AM	In	In	An AM	Ka AM
3	Ka AM	An A.M.	An PM	In	In	An PM	Ka PM
4	NC	An A (1)	An 10 Hr F	Ka A 1	An A 1	An A Dig 1	Ka G Dig 1
5	Ka F (1)	An F (1)	An 10 Hr G	Ka F 1	An F 1	An F Dig 1	Ka F Dig 1
6	Ka G (1)	An G (1)	An 10 Hr E	Ka G 1	An G 1	An G Dig 1	Ka E Dig 1
7	Ka E (1)	An E (1)	An 10 Hr D	Ka E 1	An E 1	An E Dig 1	Ka D Dig 1
8	NC	An D (1)	An 10 Hr C	Ka D 1	An D 1	An D Dig 1	Ka C Dig 1
9	Ka C (1)	An C (1)	An 10 Hr A	Ka C 1	An C 1	An C Dig 1	Ka B Dig 1
10	Ka B (1)	An B (1)	An 10 Hr B	Ka B 1	An B 1	An B Dig 1	Ka A Dig 1
11	Ka F (2)	An F (2)	An Unit Hr F	Ka F 2	An F 2	An F Dig 2	Ka G Dig 2
12	Ka G (2)	An G (2)	An Unit Hr G	Ka G 2	An G 2	An G Dig 2	Ka F Dig 2
13	Ka A (2)	An A (2)	An Unit Hr E	Ka A 2	An A 2	An A Dig 2	Ka E Dig 2
14	Ka B (2)	An B (2)	An Unit Hr D	Ka B 2	An B 2	An B Dig 2	Ka D Dig 2
15	Ka E (2)	An D (2)	An Unit Hr C	Ka E 2	An E 2	An E Dig 2	Ka C Dig 2
16	Ka D (2)	An C (2)	An Unit Hr A	Ka D 2	An D 2	An D Dig 2	Ka B Dig 2
17	Ka C (2)	An E (2)	An Unit Hr B	Ka C 2	An C 2	An C Dig 2	Ka A Dig 2
18	An Cln	An Colon	An Col	Cln	Cln	An UC	Ka UC/LC
19	An Cln	An Colon	An 10 Min F	Cln	Cln	An LC	Ka G Dig 3
20	Ka F (3)	An F (3)	An 10 Min G	Ka F 3	An F 3	An F Dig 3	Ka F Dig 3
21	Ka G (3)	An G (3)	An 10 Min E	Ka G 3	An G 3	An G Dig 3	Ka E Dig 3
22	Ka A (3)	An A, D (3)	An 10 Min D	Ka A 3	An A 3	An A Dig 3	Ka D Dig 3
23	Ka B (3)	An B (3)	An 10 Min C	Ka B 3	An B 3	An B Dig 3	Ka C Dig 3
24	Ka D (3)	An E (3)	An 10 Min A	Ka D 3	An D 3	An D Dig 3	Ka B Dig 3
25	Ka E (3)	An C (3)	An 10 Min B	Ka E 3	An E 3	An E Dig 3	Ka A Dig 3
26	Ka C (3)	An F (4)	An Dot 1	Ka C 3	An C 3	An C Dig 3	Ka D.P.
27	Ka F (4)	An G (4)	An Unit Min B	Ka F 4	An F 4	An F Dig 4	Ka G Dig 4
28	Ka G (4)	An A (4)	An Unit Min A	Ka G 4	An G 4	An G Dig 4	Ka F Dig 4
29	Ka A (4)	An B (4)	An Unit Min C	Ka A 4	An A 4	An A Dig 4	Ka E Dig 4
30	Ka B (4)	An E (4)	An Unit Min D	Ka B 4	An B 4	An B Dig 4	Ka D Dig 4
31	Ka E (4)	An D (4)	An Unit Min E	Ka E 4	An E 4	An E Dig 4	Ka C Dig 4
32	Ka D (4)	An C (4)	An Unit Min G	Ka D 4	An D 4	An D Dig 4	Ka B Dig 4
33	Ka C (4)	An Alarm	An Unit Min F	Ka C 4	An C 4	An C Dig 4	Ka A Dig 4
34	Com An	Ka Com	An Dot 2	Com An	Com Ka	Com Ka	Ka MHz

48. SCHEMATIC DRAWINGS

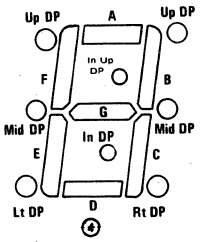

E354

Pin	a ④	b ④	c ④	d ④	e ④	f ④
1	Com Ka	Com An	Ka Com	Com Ka	An Com (1)	Com An
2	An PM	Ka PM	An AM	An Pm	An Com (2)	Ka Am
3	An AM	Ka AM	An PM	An Am	An Am	Ka Pm
4	An A (1)	Ka A (1)	An F (1)	An A (1)	Ka Am	Ka G (1)
5	An F (1)	Ka F (1)	An E (1)	An F (1)	Ka Pm	Ka F (1)
6	An G (1)	Ka G (1)	An D (1)	An G (1)	Ka B (1)	Ka E (1)
7	An E (1)	Ka E (1)	An C (1)	An E (1)	Ka A,G (1)	Ka D (1)
8	An D (1)	Ka D (1)	An G (1)	An D (1)	Ka D,E (1)	Ka C (1)
9	An C (1)	Ka C (1)	An B (1)	An C (1)	Ka C (1) E (2)	Ka B (1)
10	An B (1)	Ka B (1)	An A (1)	An B (1)	Ka B,G (2)	Ka A (1)
11	An F (2)	Ka F (2)	An F (2)	An F (2)	NC	Ka G (2)
12	An G (2)	Ka G (2)	An E (2)	An G (2)	Ka C,D (2)	Ka F (2)
13	An A (2)	Ka A (2)	An D (2)	An A (2)	Ka A,F (2)	Ka E (2)
14	An B (2)	Ka B (2)	An C (2)	An B (2)	NC	Ka D (2)
15	An E (2)	Ka E (2)	An G (2)	An D (2)	NC	Ka C (2)
16	An D (2)	Ka D (2)	An B (2)	An C (2)	NC	Ka B (2)
17	An C (2)	Ka C (2)	An A (2)	An E (2)	Ka A,F (3)	Ka A (2)
18	An Cln	Ka Cln	An Low Colon	An Up CLN	Ka B,G (3)	Ka CLN
19	An Cln	Ka Cln	An Up Colon	An Lwr CLN	Ka C,D (3)	Ka G (3)
20	An F (3)	Ka F (3)	An A (3)	An F (3)	Ka E (3)(4)	Ka F (3)
21	An G (3)	Ka G (3)	An F (3)	An G (3)	Ka B,G (4)	Ka E (3)
22	An A (3)	Ka A (3)	An G (3)	An A,D (3)	Ka C,D (4)	Ka D (3)
23	An B (3)	Ka B (3)	An E (3)	An B (3)	Ka A,F (4)	Ka C (3)
24	An D (3)	Ka D (3)	An D (3)	An E (3)	NC	Ka B (3)
25	An E (3)	Ka E (3)	An C (3)	An C (3)	NC	Ka A (3)
26	An C (3)	Ka C (3)	An B (3)	An F (4)	An Com (2)	Ka DP (3)
27	An F (4)	Ka F (4)	An A (4)	An G (4)	An Com (1)	Ka G (4)
28	An G (4)	Ka G (4)	An F (4)	An A (4)	Ka CLN	Ka F (4)
29	An A (4)	Ka A (4)	An G (4)	An B (4)	Ka Alm (1)	Ka E (4)
30	An B (4)	Ka B (4)	An E (4)	An E (4)	Ka Alm (2)	Ka D (4)
31	An E (4)	Ka E (4)	An D (4)	An D (4)	An Alm	Ka C (4)
32	An D (4)	Ka D (4)	An C (4)	An C (4)	Ka Sun,Mon	Ka B (4)
33	An C (4)	Ka C (4)	An B (4)	An Lwr DP	Ka Tue,Wed	Ka A (4)
34	Com Ka	Com An	An Alarm	Com Ka	Ka Thu,Fri	Ka MHz
35	Ka Alm	An Alm	Ka Com	An Up DP	Ka Sat	Ka KHz

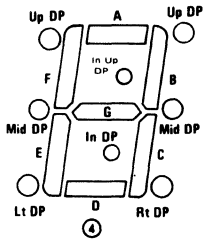

E364

Pin	a ④	b ④	c ④	d ④	e ④	f ④
1	An E (1)	Ka E (1)	Ka E (1)	Com An	An D2	Ka D2
2	An D (1)	Ka D (1)	Ka D (1)	Ka Am	An E1	Ka E1
3	An C (1)	Ka C (1)	Ka C (1)	Ka A (1)	An D1	Ka D1
4	An Rt DP (1)	Ka Rt DP (1)	Ka DP (1)	Ka F (1)	An C1	Ka C1
5	An G (2)	Ka G (2)	Ka G (2)	Ka E (1)	An E2	Ka E2
6	An E (2)	Ka E (2)	Ka E (2)	Ka D (1)	An D2	Ka D2
7	An D (2)	Ka D (2)	Ka D (2)	Ka C (1)	An C2	Ka C2
8	An C (2)	Ka C (2)	Ka C (2)	Ka G (1)	An D4	Ka D4
9	An Rt DP (2)	Ka Rt DP (2)	Ka Lower CLN	Ka B (1)	An E3	Ka E3
10	An G (3)	Ka G (3)	Ka G (3)	Ka A (2)	An G3	Ka G3
11	An E (3)	Ka E (3)	Ka E (3)	Ka F (2)	An D3	Ka D3
12	An D (3)	Ka D (3)	Ka D (3)	Ka E (2)	An C3	Ka C3
13	An C (3)	Ka C (3)	Ka C (3)	Ka D (2)	An D5	Ka D5
14	An Rt DP (3)	Ka Rt DP (3)	Ka DP (3)	Ka C (2)	An E4	Ka E4
15	An E (4)	Ka E (3)	Ka E (4)	Ka G (2)	An D4	Ka D4
16	An D (4)	Ka D (4)	Ka D (4)	Ka B (2)	An C4	Ka C4
17	An C (4)	Ka C (4)	Ka C (4)	Ka Lower CLN	An D7	Ka D7
18	An Rt DP (4)	Ka Rt DP (4)	Ka DP (4)	Ka Upper CLN	Com Ka	Com An
19	An G (4)	Ka G (4)	Ka G (4)	Ka A (3)	An D6	Ka D6
20	An B (4)	Ka B (4)	Ka B (4)	Ka F (3)	An B4	Ka B4
21	An A (4)	Ka A (4)	Ka A (4)	Ka E (3)	An A4	Ka A4
22	An F (4)	Ka F (4)	Ka F (4)	Ka D (3)	An F4	Ka F4
23	An B (3)	Ka B (3)	Ka B (3)	Ka C (3)	An G4	Ka G4
24	An A (3)	Ka A (3)	Ka A (3)	Ka G (3)	An B3	Ka B3
25	An F (3)	Ka F (3)	Ka F (3)	Ka B (3)	An A3	Ka A3
26	Com Ka	Com An	Com An	Ka A (4)	An F3	Ka F3
27	An Cln	Ka Cln	Ka Upper CLN	Ka F (4)	An D3	Ka D3
28	An B (2)	Ka B (2)	Ka B (2)	Ka E (4)	An B2	Ka B2
29	An A (2)	Ka A (2)	Ka A (2)	Ka D (4)	An A2	Ka A2
30	An F (2)	Ka F (2)	Ka F (2)	Ka C (4)	An F2	Ka F2
31	An B (1)	Ka B (1)	Ka B (1)	Ka G (4)	An G2	Ka G2
32	An A (1)	Ka A (1)	Ka A (1)	Ka B (4)	An B1	Ka B1
33	An F (1)	Ka F (1)	Ka F (1)	Ka KHZ	An A1	Ka A1
34	An G (1)	Ka G (1)	Ka G (1)	Ka DP (3)	An F1	Ka F1
35	An AM	Ka AM	Ka Am	Ka MHZ	An G1	Ka G1
36	An PM	Ka PM	NC	Ka Pm	An D1	Ka D1

48. SCHEMATIC DRAWINGS

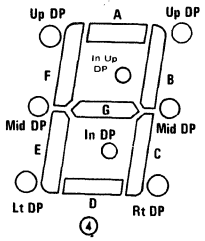

E365

Pin	a ④
1	NC
2	1 c
3	1 e
4	An F
5	2 b
6	2 d
7	2 e
8	An E
9	3 c
10	3 e
11	An G
12	4 a
13	4 b
14	4 d
15	NC
16	5 b
17	5 d
18	NC
19	5 e
20	5 c
21	5 a
22	An D
23	4 e
24	4 c
25	NC
26	An C
27	3 d
28	3 b
29	3 a
30	An B
31	2 c
32	2 a
33	An A
34	1 d
35	1 b
36	1 a

E374

Pin	a ④	b ④	c ④
1	An Ind	An AM/PM	Ka AM/PM
2	An F (1)	Ka AM/PM (1, 2)	An AM/PM (1, 2)
3	An E (1)	NC	NC
4	An D (1)	NC	NC
5	Com Ka Ind (1)	An A (1)	Ka A (1)
6	An G (1)	An F (1)	Ka F (1)
7	An C (1)	An G (1)	Ka G (1)
8	An A (1)	An E (1)	Ka E (1)
9	An B (1)	An D (1)	Ka D (1)
10	An F (2)	An C (1)	Ka C (1)
11	An E (2)	An B (1)	Ka B (1)
12	An D (2)	An F (2)	Ka F (2)
13	Com Ka (2)	An G (2)	Ka G (2)
14	An C (2)	An A (2)	Ka A (2)
15	An G (2)	An B (2)	Ka B (2)
16	An A (2)	An E (2)	Ka E (2)
17	An B (2)	An D (2)	Ka D (2)
18	An Cln	NC	NC
19	Ka Cln	An C (2)	Ka C (2)
20	An F (3)	Up Cln	Up Cln
21	An E (3)	Lwr Cln	Lwr Cln
22	An D (3)	An F (3)	Ka F (3)
23	Com Ka (3)	An G (3)	Ka G (3)
24	An G (3)	An A (3)	Ka A (3)
25	An C (3)	An B (3)	Ka B (3)
26	An A (3)	An D (3)	Ka D (3)
27	An B (3)	An E (3)	Ka E (3)
28	An F (4)	An C (3)	Ka C (3)
29	An E (4)	An F (4)	Ka F (4)
30	An D (4)	An G (4)	Ka G (4)
31	NC	An A (4)	Ka A (4)
32	Com Ka Ind (4)	An B (4)	Ka B (4)
33	An G (4)	An E (4)	Ka E (4)
34	An C (4)	An D (4)	Ka D (4)
35	An Ind	An C (4)	Ka C (4)
36	An A (4)	Ka Cln AL/SLP (3, 4)	An Cln AL/SLP (3, 4)
37	An B (4)	An AL/SLP	Ka AL/SLP

Continued on next page

48. SCHEMATIC DRAWINGS

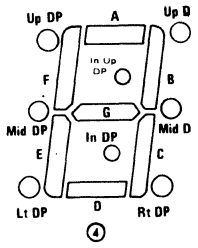

E374

Pin	d ④	e ④	f ④	g ④	h ④	i ④
1	Ka Am In	An Am In	Ka Am In	An Am In	An Am	Ka Am
2	Com An	Com Ka	Com An	Com Ka	Com Ka	Com An
3	NC	NC	NC	NC	Ka Pm	An Pm
4	NC	NC	NC	NC	An Pm	Ka Pm
5	Ka A (1)	An A (1)	NC	NC	An A (1)	Ka A (1)
6	Ka F (1)	An F (1)	NC	NC	An F (1)	Ka F (1)
7	Ka G (1)	An G (1)	NC	NC	An G (1)	Ka G (1)
8	Ka E (1)	An E (1)	NC	NC	AN E (1)	Ka E (1)
9	Ka D (1)	An D (1)	NC	NC	An D (1)	Ka D (1)
10	Ka C (1)	An C (1)	Ka C (1)	An C (1)	An C (1)	Ka C (1)
11	Ka B (1)	An B (1)	Ka B (1)	An B (1)	An B (1)	Ka B (1)
12	Ka F (2)	An F (2)	Ka F (2)	An F (2)	An F (2)	Ka F (2)
13	Ka G (2)	An G (2)	Ka G (2)	An G (2)	An G (2)	Ka G (2)
14	Ka A (2)	An A (2)	Ka A (2)	An A (2)	An A (2)	Ka A (2)
15	Ka B (2)	An B (2)	Ka B (2)	An B (2)	An B (2)	Ka B (2)
16	Ka E (2)	An E (2)	Ka E (2)	An E (2)	An E (2)	Ka E (2)
17	Ka D (2)	An D (2)	Ka D (2)	An D (2)	An D (2)	Ka D (2)
18	NC	NC	NC	NC	An J (2)	Ka J (2)
19	Ka C (2)	An C (2)	Ka C (2)	An C (2)	An C (2)	Ka C (2)
20	Ka Cln	An Cln	Ka CLN	An CLN	An Upper CLN	Ka Upper CLN
21	Ka Cln	An Cln	Ka CLN	An CLN	An Lower CLN	Ka Lower CLN
22	Ka F (3)	An F (3)	Ka F (3)	An F (3)	An F (3)	Ka F (3)
23	Ka G (3)	An G (3)	Ka G (3)	An G (3)	An G (3)	Ka G (3)
24	Ka A (3)	An A (3)	Ka A (3)	An A (3)	An A (3)	Ka A (3)
25	Ka B (3)	An B (3)	Ka B (3)	An B (3)	An B (3)	Ka B (3)
26	Ka D (3)	An D (3)	Ka D (3)	An D (3)	An D (3)	Ka D (3)
27	Ka E (3)	An E (3)	Ka E (3)	An E (3)	An E (3)	Ka E (3)
28	Ka C (3)	An C (3)	Ka C (3)	An C (3)	An C (3)	Ka C (3)
29	Ka F (4)	An F (4)	Ka F (4)	An F (4)	An F (4)	Ka F (4)
30	Ka G (4)	An G (4)	Ka G (4)	An G (4)	An G (4)	Ka G (4)
31	Ka A (4)	An A (4)	Ka A (4)	An A (4)	An A (4)	Ka A (4)
32	Ka B (4)	An B (4)	Ka B (4)	An B (4)	An B (4)	Ka B (4)
33	Ka E (4)	An E (4)	Ka E (4)	An E (4)	An E (4)	Ka E (4)
34	Ka D (4)	An D (4)	Ka D (4)	An D (4)	An D (4)	Ka D (4)
35	Ka C (4)	An C (4)	Ka C (4)	An C (4)	An C (4)	Ka C (4)
36	Com An	Com Ka	Com An	Com Ka	Com Ka	Com An
37	Ka SLP In	An SLP In	Ka SLP In	An SLP In	An Al	Ka Al

E404

Pin	a ④	b●	●c
1	Com (1-4) [BP]	BP	BP
2	NC	Minus	Minus
3	NC	Ka	Ka
4	NC	NC	NC
5	E (1)	NC	NC
6	D (1)	NC	NC
7	C (1)	NC	NC
8	DP (1)	DP 1	DP 1
9	E (2)	E 2	E 2
10	D (2)	D 2	D 2
11	C (2)	C 2	C 2
12	CP (2)	DP 2	DP 2
13	E (3)	E 3	E 3
14	D (3)	D 3	D 3
15	C (3)	C 3	C 3
16	DP (3)	DP 3	DP 3
17	E (4)	E 4	E 4
18	D (4)	D 4	D 4
19	C (4)	C 4	C 4
20	B (4)	B 4	B 4
21	A (4)	A 4	A 4
22	F (4)	F 4	F 4
23	G (4)	G 4	G 4
24	B (3)	B 3	B 3
25	A (3)	A 3	A 3
26	F (3)	F 3	F 3
27	G (3)	G 3	G 3
28	CLN (L)	Co 1	Co 1
29	B (2)	B 2	B 2
30	A (2)	A 2	A 2
31	F (2)	F 2	F 2
32	G (2)	G 2	G 2
33	N/C	NC	NC
34	B (1)	NC	NC
35	A (1)	NC	NC
36	F (1)	NC	NC
37	G (1)	NC	NC
38	N/C	H	BAT
39	N/C	Plus	Plus
40	Com (1-4) [BP]	BP	BP

48. SCHEMATIC DRAWINGS

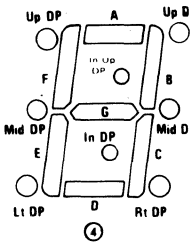

E405

Pin	● a	● b
1	BP	BP
2	Minus	Y
3	Ka	K
4	DP 1	DP 1
5	E 1	E 1
6	D 1	D 1
7	C 1	C 1
8	DP 2	DP 2
9	E 2	E 2
10	D 2	D 2
11	C 2	C 2
12	DP 3	DP 3
13	E 3	E 3
14	D 3	D 3
15	C 3	C 3
16	DP 4	DP 4
17	E 4	E 4
18	D 4	D 4
19	C 4	C 4
20	B 4	B 4
21	A 4	A 4
22	F 4	F 4
23	G 4	G 4
24	B 3	B 3
25	A 3	A 3
26	F 3	F 3
27	G 3	G 3
28	Co 1	L 2
29	B 2	B 2
30	A 2	A 2
31	F 2	F 2
32	G 2	G 2
33	Co 1	L 1
34	B 1	B 1
35	A 1	A 1
36	F 1	F 1
37	G 1	G 1
38	H	BAT
39	Plus	X
40	BP	N/C

E424

Pin	a ④	b ④	c
1	An AM/PM	An AM	An AM
2	Com Ka	Com Ka	Com Ka
3	An E (1)	An E (1)	NC
4	An D (1)	An D (1)	NC
5	An C (1)	An C (1)	An C Dig 1
6	An G (1)	An G (1)	NC
7	An F (1)	An F (1)	NC
8	An B (1)	An B (1)	An B Dig 1
9	An A (1)	An A (1)	NC
10	An F (2)	An F (2)	An F Dig 2
11	An G (2)	An G (2)	An G Dig 2
12	An A (2)	An A (2)	An A Dig 2
13	An B (2)	An B (2)	An B Dig 2
14	An E (2)	An E (2)	An E Dig 2
15	An D (2)	An D (2)	An D Dig 2
16	An C (2)	An C (2)	An C Dig 2
17	An Lwr Cln	An Lwr Cln	An LC
18	NC	NC	NC
19	NC	NC	NC
20	NC	NC	NC
21	NC	NC	NC
22	NC	NC	NC
23	NC	NC	NC
24	NC	NC	NC
25	NC	NC	NC
26	An Upr Cln	An Upr Cln	An UC
27	An F (3)	An F (3)	An F Dig 3
28	An F (3)	An G (3)	An G Dig 3
29	An A (3)	An A (3)	An A Dig 3
30	An B (3)	An B (3)	An B Dig 3
31	An E (3)	An E (3)	An E Dig 3
32	An D (3)	An D (3)	An D Dig 3
33	An C (3)	An C (3)	An C Dig 3
34	An F (4)	An F (4)	An F Dig 4
35	An G (4)	An G (4)	An G Dig 4
36	An A (4)	An A (4)	An A Dig 4
37	An B (4)	An B (4)	An B Dig 4
38	An E (4)	An E (4)	An E Dig 4
39	An D (4)	An D (4)	An D Dig 4
40	An C (4)	An C (4)	An C Dig 4
41	Com Ka	Com Ka	Com Ka
42	An Alarm	An AL	An AL

E425

Pin	a ④
1	Ca G (2)
2	Ca F (2)
3	Ca E (2)
4	Ca D (2)
5	Ca C (2)
6	Ca B (2)
7	Ca A (2)
8	Ca G (3)
9	Ca F (3)
10	Ca E (3)
11	Ca D (3)
12	Ca C (3)
13	Ca B (3)
14	Ca A (3)
15	Ca G (4)
16	Ca F (4)
17	Ca E (4)
18	Ca D (4)
19	Ca C (4)
20	Ca B (4)
21	Ca A (4)
22	Ca MHz KHz
23	An MHz
24	An KHz
25	Ca ST
26	Ca G (5)
27	Ca B,E (5)
28	Ca A,C (5)
29	Ca D,F (5)
30	An Com
31	An DP
32	Ca DP
33	Ca Lwr Cln
34	Ca Upr Cln
35	Ca C (1)
36	Ca B (1)
37	Ca LW
38	Ca MW
39	Ca FM
40	An FM
41	An MW
42	An LW

48. SCHEMATIC DRAWINGS

E506

Pin	a ④	● b	● c
1	Com An	BP	BP
2	NC	E 1	RP
3	Ka E (6)	D 1	E6
4	Ka D (6)	C 1	D6
5	Ka C (6)	DP 1	C6
6	Ka B (6)	E 2	E5
7	Ka A (6)	D 2	D5
8	Ka G (6)	C 2	C5
9	Ka F (6)	DP 2	E4
10	Ka E (5)	E 3	D4
11	Ka D (5)	D 3	C4
12	Ka C (5)	C 3	DP3
13	Ka B (5)	DP 3	E3
14	Ka A (5)	E 4	D3
15	Ka G (5)	D 4	C3
16	Ka F (5)	C 4	DP2
17	Ka E (4)	DP 4	E2
18	Ka D (4)	E 5	D2
19	Ka C (4)	D 5	C2
20	Ka B (4)	C 5	DP1
21	Ka A (4)	DP 5	E1
22	Ka G (4)	E 6	D1
23	Ka F (4)	D 6	C1
24	NC	C 6	B1
25	Com An	B 6	½
26	Com An	A 6	A1
27	NC	F 6	F1
28	Ka E (3)	G 6	G1
29	Ka D (3)	B 5	B2
30	Ka C (3)	A 5	A2
31	Ka B (3)	F 5	F2
32	Ka A (3)	G 5	G2
33	Ka G (3)	Co 1	N.C.
34	Ka F (3)	B 4	B3
35	Ka E (2)	A 4	A3
36	Ka D (2)	F 4	F3
37	Ka C (2)	G 4	G3
38	Ka B (2)	B 3	N.C.
39	Ka A (2)	A 3	B4
40	Ka G (2)	F 3	A4
41	Ka F (2)	G 3	F4
42	Ka E (1)	Co 1	G4
43	Ka D (1)	B 2	B5
44	Ka C (1)	A 2	A5
45	Ka B (1)	F 2	F5
46	Ka A (1)	G 2	G5
47	Ka G (1)	B 1	B6
48	Ka F (1)	A 1	A6
49	NC	F 1	F6
50	Com An	G 1	G6

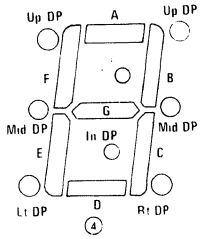

E2212

Pin	a ⑦
1	NC
2	C2
3	C3
4	C4
5	Ca
6	c5
7	DPa
8	c6
9	Aa
10	c7
11	Ea
12	c8
13	Da
14	c9
15	Ga
16	c10
17	Ba
18	c11
19	Fa
20	c12
21	c13
22	NC

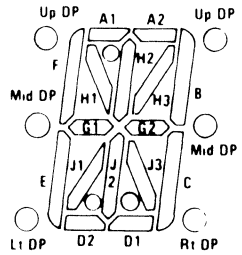

E2414

Pin	a ④
1	PAD/A
2	Ka (1)
3	Ka (2)
4	Ka (3)
5	Ka (4)
6	An DP
7	Ka (5)
8	An C
9	Ka (6)
10	An E
11	Ka (7)
12	An A
13	Ka (8)
14	An G
15	Ka (9)
16	An D
17	Ka (10)
18	An F
19	Ka (11)
20	An B
21	Ka (12)
22	Ka (13)
23	Ka (14)
24	PAD/B

48. SCHEMATIC DRAWINGS

E002

Numeric Displays w/Integral Driver

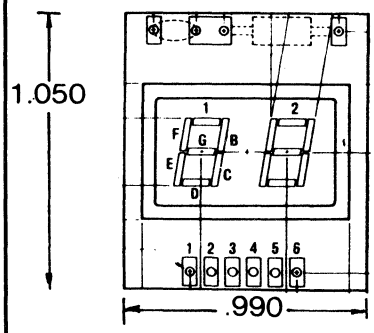

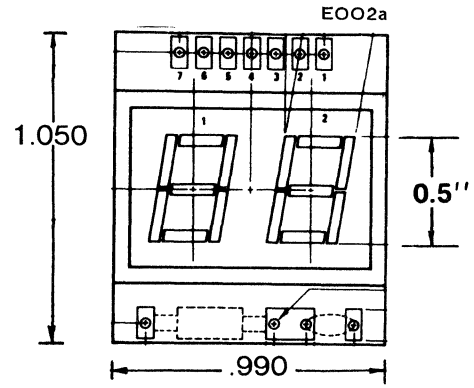

E082zz

7×5 Dual Intelligent LED Display

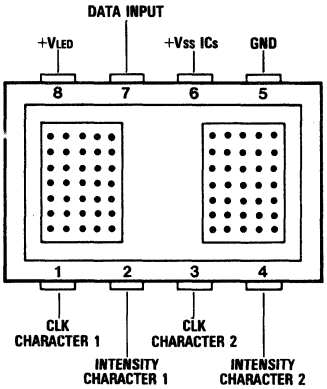

E004

Numeric Displays w/Integral Driver

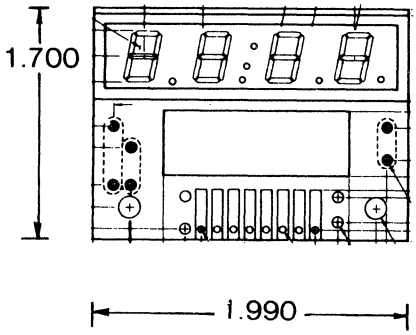

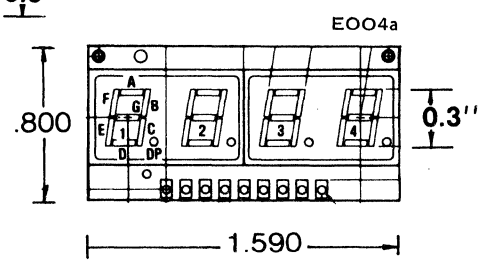

E081z

Common Anode LED Display

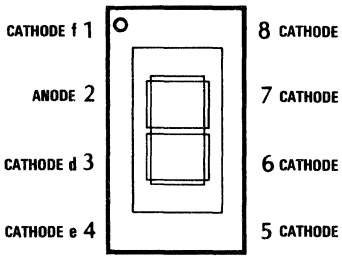

E201a

Pin	a 7
1	Com An
2	Ka G1
3	Ka E
4	Ka D2
5	Ka J1
6	Ka J2
7	Ka D1
8	Ka J3
9	Ka C
10	Ka Rt DP
11	Com An
12	Ka G2
13	Ka B
14	Ka A2
15	Ka H3
16	Ka H2
17	Ka A1
18	Ka H1
19	Ka F
20	Ka Up DP

E141cv

Pin	cv 4
1	An E
2	An D
3	No Pin
4	Com Ka
5	An C
6	An Rt DP
7	No Pin
8	An B
9	An A
10	No Pin
11	Com Ka
12	An F
13	No Pin
14	An G

E141cu

Pin	cu 4
1	Ka E
2	Ka D
3	No Pin
4	Com An
5	Ka C
6	Ka Rt DP
7	No Pin
8	Ka B
9	Ka A
10	No Pin
11	Com An
12	Ka F
13	No Pin
14	Ka G

48. SCHEMATIC DRAWINGS

E032zz 9-Segment 32-Character Alphanumeric Display System

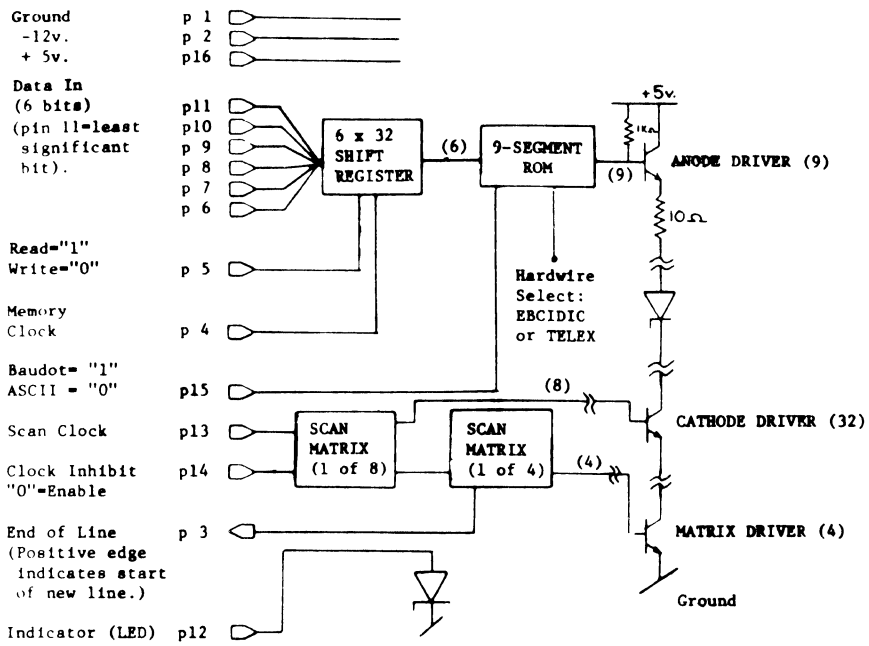

E141ct

Pin	ct 1 3
1	An Vb
2	Ka Vb
3	Ka One c
4	An One c
5	Ka Rt DP
6	An Rt DP
7	No Pin
8	An One b
9	No Pin
10	Ka One b
11	Ka Z
12	An Va
13	Ka Va
14	An Z

E045zz 5-Element Bar Graph W/Driver

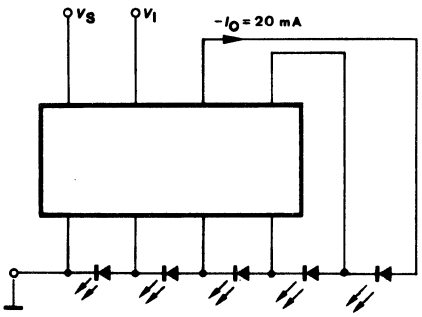

E051zx 4-Element LED Display

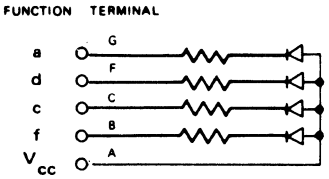

E071zy 6-Element LED Display

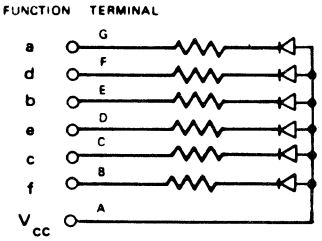

E081zx E081zy Alphanumeric Character Display W/Decoder/Driver

NOTES:

1) THE DECIMAL POINT INPUT, DP, PERTAINS ONLY TO E081ZX.
2) THE BLANKLING CONTROL INPUT, B, PERTAINS ONLY TO E081ZY.

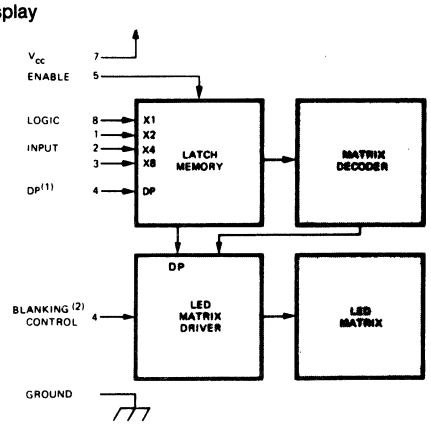

48. SCHEMATIC DRAWINGS

E241b

Pin	b 7
1	An Up DP
2	An A1
3	An H1
4	An F
5	No Pin
6	Com Ka
7	An G1
8	No Pin
9	An E
10	An D2
11	An J1
12	An J2
13	An Rt DP
14	An D1
15	An J3
16	An C
17	No Pin
18	Com Ka
19	An G2
20	No Pin
21	An B
22	An A2
23	An H3
24	An H2

E241a

Pin	a 7
1	Ka Up DP
2	Ka A1
3	Ka H1
4	Ka F
5	No Pin
6	Com An
7	Ka G1
8	No Pin
9	Ka E
10	Ka D2
11	Ka J1
12	Ka J2
13	Ka Rt DP
14	Ka D1
15	Ka J3
16	Ka C
17	No Pin
18	Com An
19	Ka G2
20	No Pin
21	Ka B
22	Ka A2
23	Ka H3
24	Ka H2

E201b

Pin	b 7
1	Com Ka
2	An G1
3	An E
4	An D2
5	An J1
6	An J2
7	An D1
8	An J3
9	An C
10	An Rt DP
11	Com Ka
12	An G2
13	An B
14	An A2
15	An H3
16	An H2
17	An A1
18	An H1
19	An F
20	An Up DP

E101bw

Pin	bw 1 3
1	Ka Va, Vb
2	An Vb
3	An One c
4	An Rt DP
5	Ka Rt Dp
6	An One b
7	Ka One b, One c
8	An Va
9	Ka Z
10	An Z

E141CS

Pin	cs 1 3
1	An Va
2	Ka Va
3	No Pin
4	An Z
5	An Vb
6	Ka Vb
7	Ka Z
8	Ka Rt DP
9	An Rt DP
10	An One c
11	An One b
12	No Pin
13	Ka One b
14	Ka One c

48. SCHEMATIC DRAWINGS

E081zz Hexadecimal Display W/Decoder/Driver

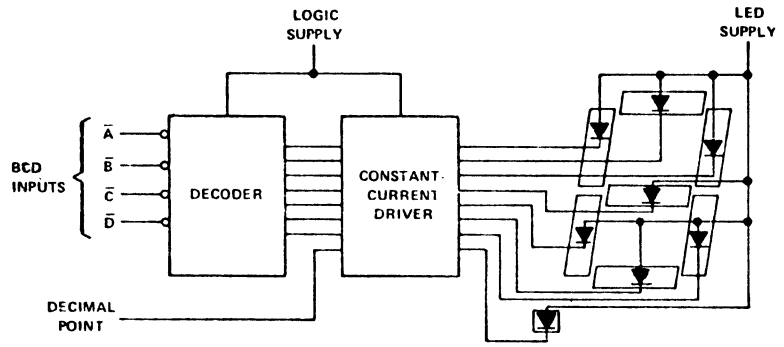

PIN 1 DATA INPUT Ā (BINARY WEIGHT 1)
PIN 2 DECIMAL POINT INPUT
PIN 3 LED SUPPLY VOLTAGE, V_{LED}
PIN 4 DATA INPUT D̄ (BINARY WEIGHT 8)
PIN 5 DATA INPUT C̄ (BINARY WEIGHT 4)
PIN 6 GROUND
PIN 7 LOGIC SUPPLY VOLTAGE, V_{CC}
PIN 8 DATA INPUT B̄ (BINARY WEIGHT 2)

E104zz 7-Segment Display

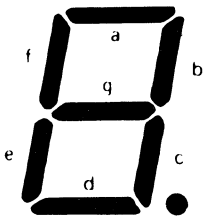

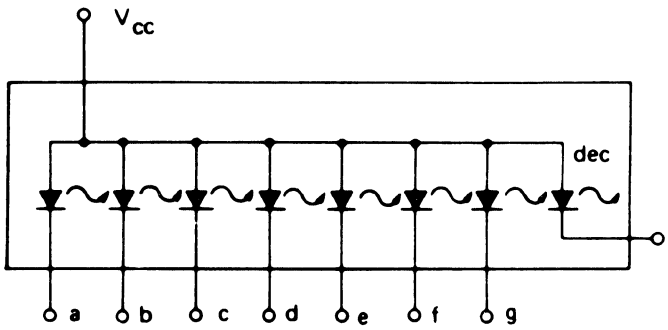

E204zz Alphanumeric Display w/ Integral Driver

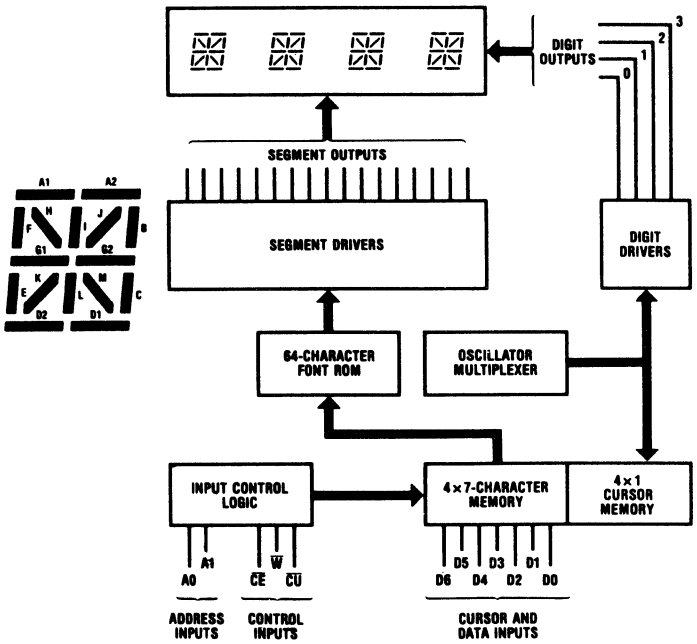

E283zz Dot Matrix Character Display System

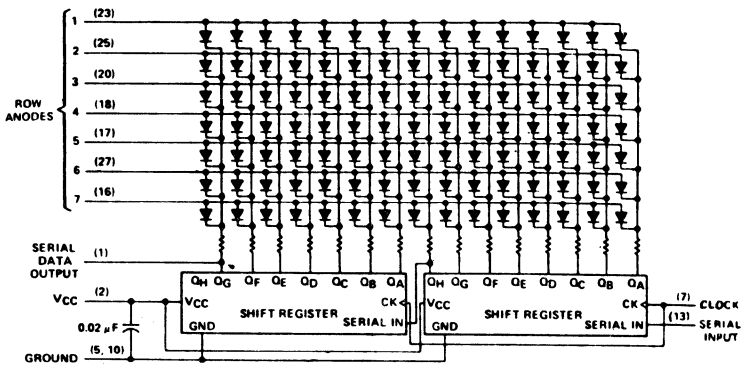

48. SCHEMATIC DRAWINGS

E161zx Dot Matrix Display System

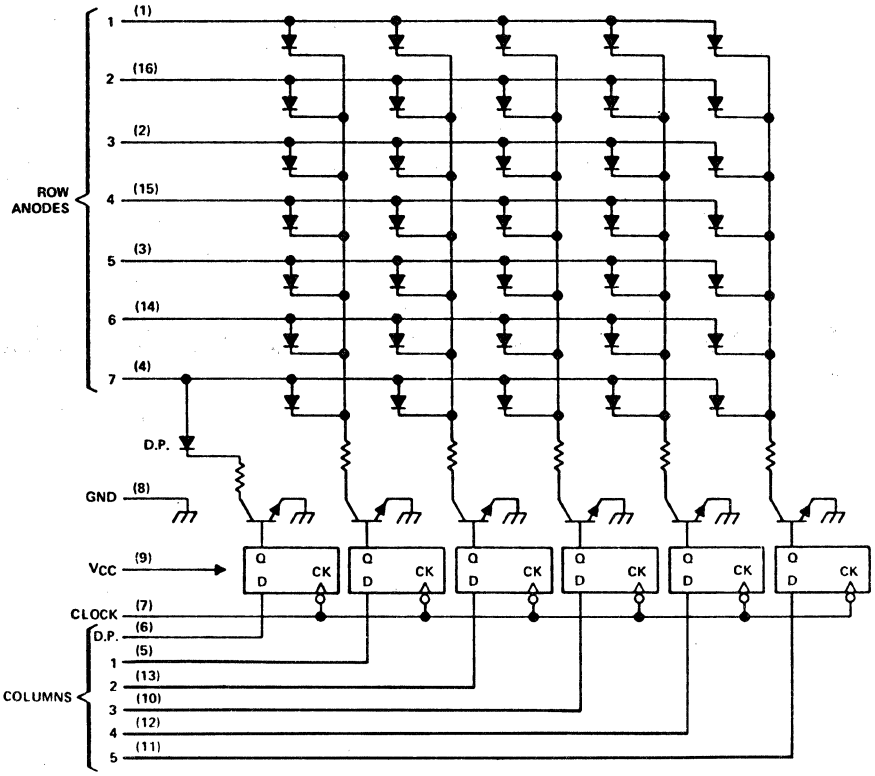

E164zz 4-Character 5x7 Alphanumeric Display W/Decoder/Driver

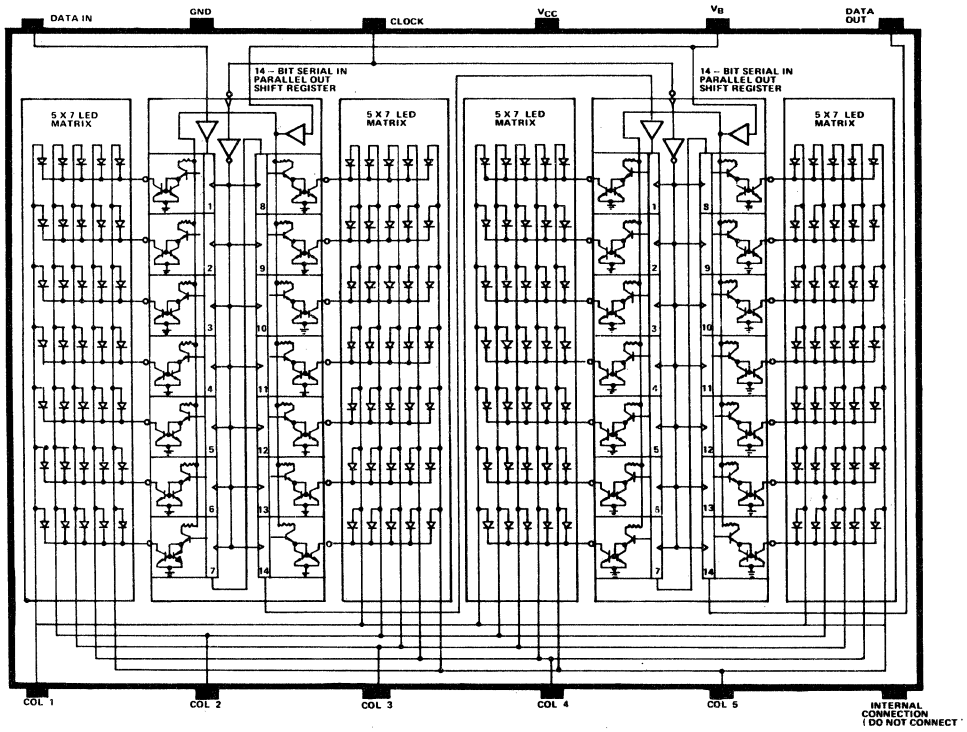

48. SCHEMATIC DRAWINGS

E304zz Four Digit LED Clock Frequency Display

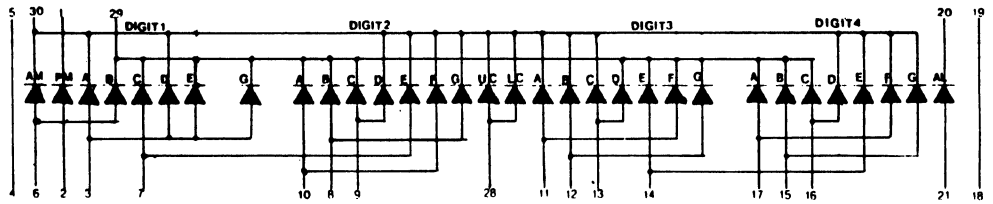

E410zz 10-Element Bar Graph W/Driver

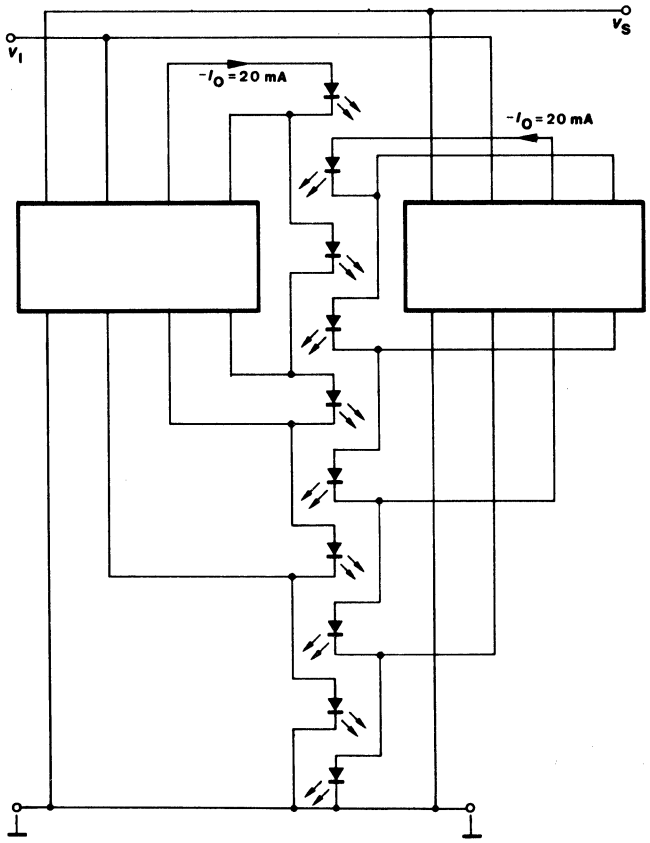

48. SCHEMATIC DRAWINGS

E214zz Clock Display Control Circuit

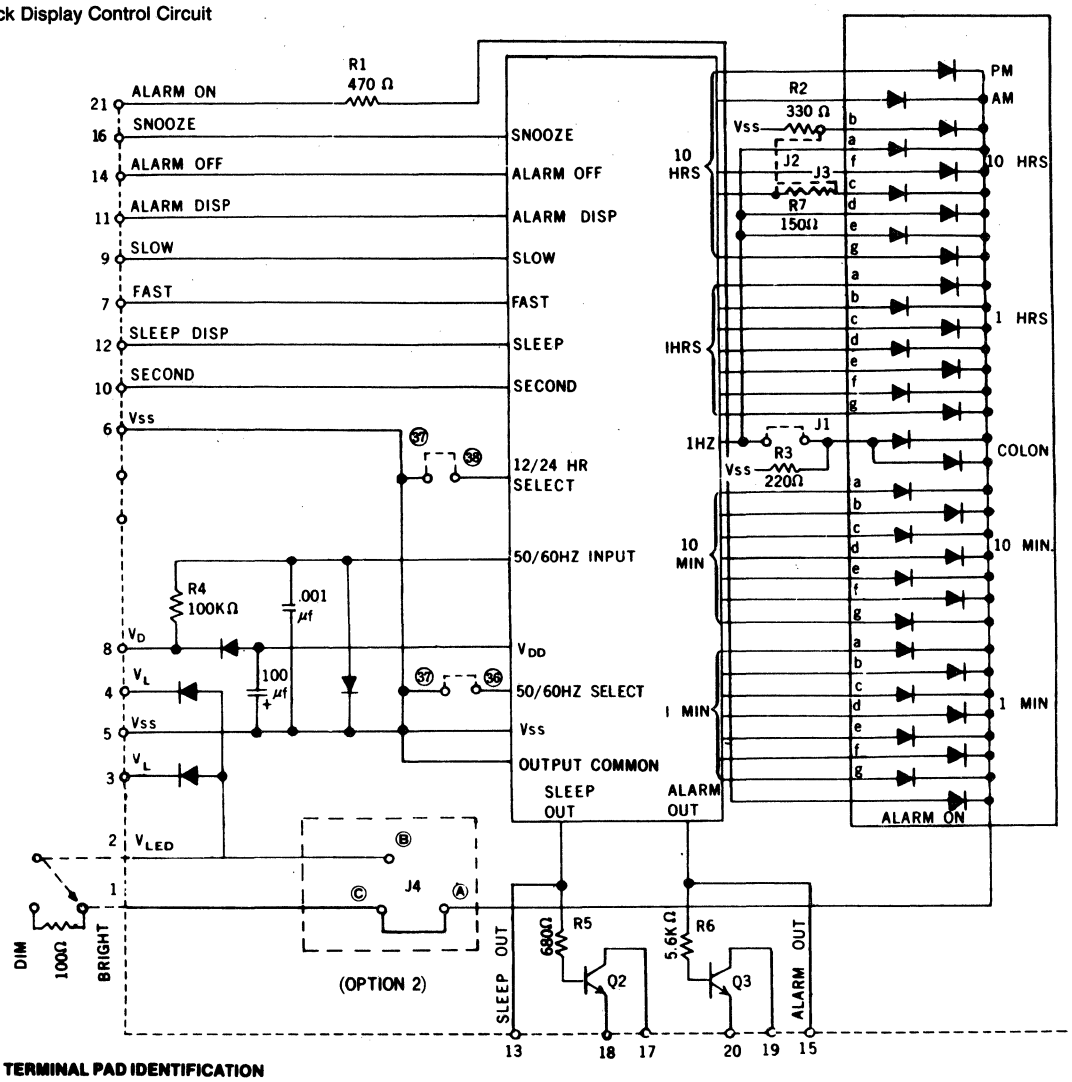

TERMINAL PAD IDENTIFICATION

DIGIT	SEGMENT	EB23	EB23a	EB23b	EB23c	EB23d	EB23e	EB23f	EB23g
	BP	1,2	1,2	1,2	1,2	1,2	1,2	1,2	1,2
1	M	4	4	3	4	3	3	3	4
	F	5	5	5	5	4	4	4	5
	G	6	6	6	6	5	5	5	6
	E	7	7	7	7	6	6	6	7
	D	8	8	8	8	7	7	7	8
	C	10	11	12	13	9	10	11	13
	B	11	12	13	14	10	11	12	14
	A	12	13	14	15	11	12	13	15
2	M	13	14	15	16	13	13	14	16
	F	14	15	17	17	14	14	15	17
	G	15	16	18	18	15	15	16	18
	E	16	17	19	19	16	16	17	19
	D	17	18	20	20	17	17	18	20
	C	20	20	24	25	18	20	22	25
	B	21	21	25	26	19	21	23	26
	A	22	22	26	27	20	22	24	27
3	M					21	23	25	28
	F					22	24	26	29
	G					23	25	27	30
	E					24	26	28	31
	D					25	27	29	32
	C					26	30	33	37
	B					27	31	34	38
	A					28	32	35	39
4	M					30	33	36	40
	F					31	34	37	41
	G					32	35	38	42
	E					33	36	39	43
	D					34	37	40	44
	C					36	40	44	49
	B					37	41	45	50
	A					38	42	46	51
	BP	24,25	24,25	29,30	29,30	39,40	44,45	49,50	54,55

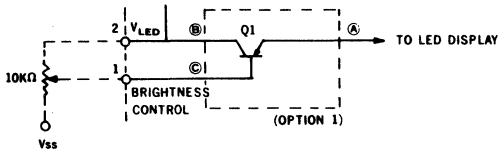

EB Section Numbers are explained as follows:
see type no for outline drawing number. ± to be counted as 1 digit.

EB Drawing Number Key

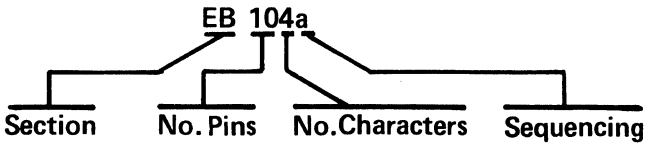

IDENTIFYING NUMBER

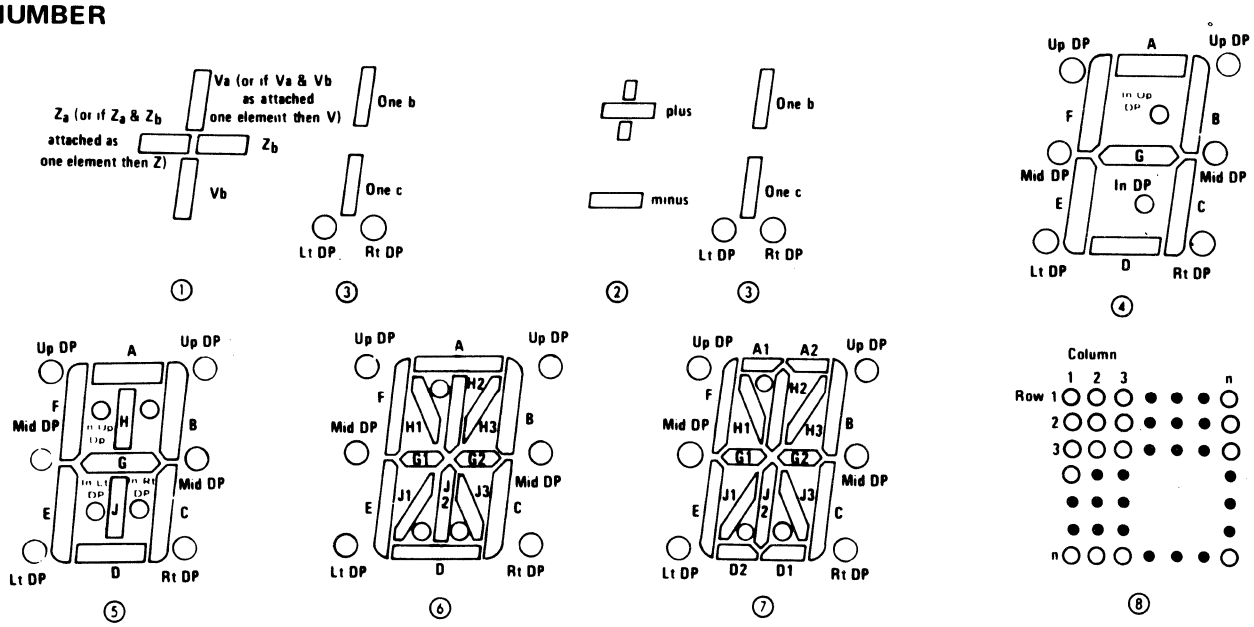

Glossary of Symbols & Abbreviations

A	- Anode	Con	- Connected	L Sen	- Light Sensor
Al	- Alarm	dec	- Decimal	LED	- Light Emitting Diode
An	- Anode	Dgr	- Degree	Lft	- Left
An Am In	- Anode AM Indicator	dig	- Digit	NC	- No Connection
An Al In	- Anode Alarm Indicator	Dig Com An	- Digit Common Anode	Opt	- Optional
An Cln	- Anode Colon	Dig Com Ka	- Digit Common Cathode	Out	- Output
An PM In	- Anode PM Indicator	DP	- Decimal Point	Rpl	- Ripple
BCD	- Binary Coded Decimal	ex	- Except	Rt	- Right
Blkng	- Blanking	ex dec	- Except Decimal	Seg	- Segment
Ca	- Cathode	Gnd	- Ground	Sel	- Select
Cln	- Colon	In	- Indicator, Input or Internal	Sen	- Sensor
Com	- Common	Int Con	- Internally Connected	V	- Volts
Com An	- Common Anode	KA	- Cathode	VCC	- Supply Voltage
Com Ka	- Common Cathode	KA PM In	- Cathode PM Indicator	WR	- Write
Com An Cln	- Common Anode Colon	KA AL In	- Cathode Alarm Indicator	( )	- Number of Digits
Com Ka Cln	- Common Cathode Colon	L	- Light	[ ]	- Mfrs. Lettering

48. SCHEMATIC DRAWINGS

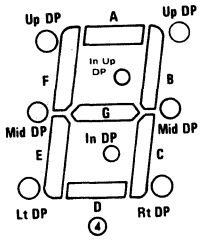

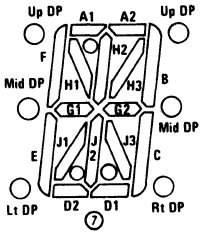

EB155

Pin	4 a
1	P1 E1 F1
2	D1 G1 A1
3	One C1 B1
4	P2 E2 F2
5	D2 G2 A2
6	C2 B2
7	P3 E3 F3
8	D3 G3 A3
9	LO BAT C3 B3
10	P4 E4 F4
11	D4 G4 A4
12	CON C4 B4
13	Common 3
14	Common 2
15	Common 1

EB181

Pin	7 a
1	BP
2	H2
3	A1
4	H1
5	F
6	G1
7	E
8	J1
9	D1
10	J2
11	D2
12	J3
13	B2
14	G2
15	B1
16	H3
17	A2
18	BP

EB182

Pin	4 a
1	BP
2	DP1
3	E1
4	D1
5	C1
6	DP2
7	E2
8	D2
9	C2
10	B2
11	A2
12	F2
13	G2
14	B1
15	A1
16	F1
17	G1
18	BP

EB182b

Pin	a 4
1	COM
2	3DP
3	2E
4	2D
5	2C
6	2DP
7	1E
8	1D
9	1C
10	1B
11	1A
12	1F
13	1G
14	2B
15	2A
16	2F
17	2G
18	COM

EB184

Pin	4 a
1	BP
2	DP1
3	E1
4	D1
5	C1
6	DP2
7	E2
8	D2
9	C2
10	B2
11	A2
12	F2
13	G2
14	B1
15	A1
16	F1
17	G1
18	BP

EB202

Pin	a 4
1	NC
2	NC
3	NC
4	4B,4C,4DP
5	3B,3C,3DP
6	2B,2C,2DP
7	1B,1C,NC
8	COM 3
9	NC
10	NC
11	COM 1
12	1A,1G,1D
13	1F,1E,NC
14	2A,2G,2D
15	2F,2E,NC
16	3A,3G,3D
17	3F,3E,NC
18	4A,4G,4D
19	4F,4E,NC
20	COM 2

EB244

Pin	4 a
1	BP
2	K
3	E1
4	D1
5	C1
6	CLN
7	E2
8	D2
9	C2
10	E3
11	D3
12	C3
13	B3
14	A3
15	F3
16	G3
17	B2
18	A2
19	F2
20	G2
21	B1
22	A1
23	F1
24	G1

EB243

Pin	a 4
1	E1
2	D1–
3	C1
4	DP1
5	E2
6	D2
7	C2
8	DP2
9	E3
10	D3
11	C3
12	B3
13	A3
14	F3
15	G3
16	B2
17	A2
18	F2
19	G2
20	B1
21	A1
22	F1
23	G1
24	BP

48. SCHEMATIC DRAWINGS

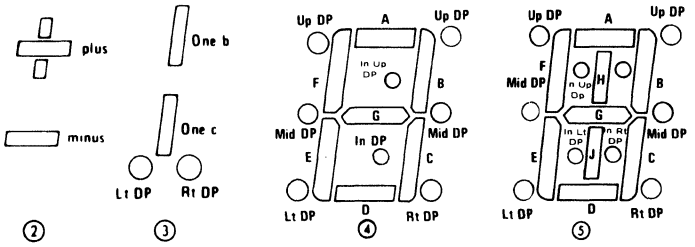

EB364

Pin	a ②③④	b ④	c ⑤	● d	④ e	f ●a
1	COM	COM	BP	NC	BP	BP
2	(—)	NC	G0	BP	NC	NC
3	B-C	4E	E0	PM	1b,1c	E1
4	NC	4D	J0	F1	NC	D1
5	NC	4C	D0	G1	NC	C1
6	4DP	4DP	C0	E1	DP1	DP1
7	3E	3E	E1	D1	E1	E2
8	3D	3D	J1	C1	D1	D2
9	3C	3C	D1	B1	C1	C2
10	3DP	3DP	C1	A1	DP2	DP2
11	2E	2E	DASH	F2	E2	E3
12	2D	2D	CLN	G2	D2	D3
13	2C	2C	F2	E2	C2	C3
14	2DP	2DP	D2	D2	DP3	DP3
15	1E	1E	C2	NC	E3	E4
16	1D	1D	E3	NC	D3	D4
17	1C	1C	D3	C2	C3	C4
18	1B	1B	C3	B2	B3	B4
19	1A	1A	B3	A2	A3	A4
20	1F	1F	A3	CLN	F3	F4
21	1G	1G	F3	F3	G3	G4
22	2B	2B	G3	G3	B2	B3
23	2A	2A	B2	E3	A2	A3
24	2F	2F	A2	D3	F2	F3
25	2G	2G	F2	C3	G2	G3
26	L	L	G2	B3	CLN	CLN
27	3B	3B	P (PM)	A3	B1	B2
28	3A	3A	A (AM)	F4	A1	A2
29	3F	3F	B1	G4	F1	F2
30	3G	3G	A1	E4	G1	G2
31	NC	4B	F1	D4	NC	B1
32	NC	4A	G1	C4	NC	A1
33	NC	4F	B0	B4	NC	F1
34	(◄—)	4G	A0	A4	(:)	G1
35	(:)	NC	H0	FLAG	(←—)	BP
36	COM	COM	F0	BELL	BP	NC

48. SCHEMATIC DRAWINGS

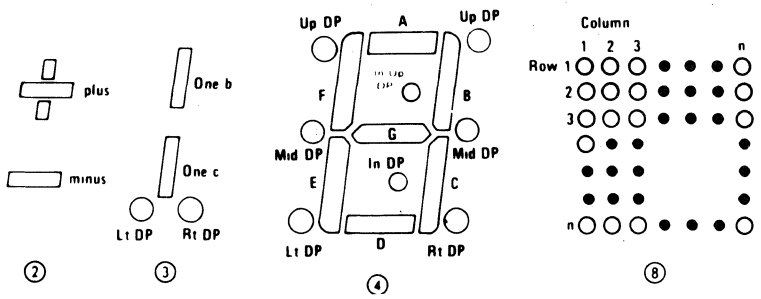

EB401

Pin	⑧ a
1	NC
2	C1R6
3	C1R5
4	C1R4
5	C1R3
6	C1R1
7	C1R2
8	C2R3
9	C2R1
10	C2R2
11	C3R2
12	C3R1
13	C3R3
14	C3R4
15	C4R1
16	C4R2
17	C4R3
18	C5R1
19	C5R2
20	C5R3
21	C5R4
22	C5R5
23	C5R6
24	C5R7
25	C4R4
26	C4R5
27	C4R7
28	C4R6
29	C3R6
30	C3R7
31	C3R5
32	C2R4
33	C2R7
34	C2R6
35	C2R5
36	C1R7
37	NC
38	BP
39	BP
40	BP

EB403

Pin	a④
1	BP
2	NC
3	(AC)
4	(BAT)
5	ONE
6	DP1
7	E1
8	D1
9	C1
10	DP2
11	E2
12	D2
13	C2
14	DP3
15	E3
16	D3
17	C3
18	(M)
19	(K)
20	(Ω)
21	(°F)
22	(°C)
23	(A)
24	(V)
25	(m)
26	B3
27	A3
28	F3
29	G3
30	B2
31	A2
32	F2
33	G2
34	B1
35	A1
36	F1
37	G1
38	(←—)
39	(-)
40	(DC)

EB406

Pin	a ②③④
1	COM
2	(—)
3	B-C
4	5DP
5	4E
6	4D
7	4C
8	4DP
9	3E
10	3D
11	3C
12	3DP
13	2E
14	2D
15	2C
16	2DP
17	1E
18	1D
19	1C
20	1B
21	1A
22	1F
23	1G
24	2B
25	2A
26	2F
27	2G
28	L2
29	3B
30	3A
31	3F
32	3G
33	L1
34	4B
35	4A
36	4F
37	4G
38	(←)
39	(:)
40	COM

48. SCHEMATIC DRAWINGS

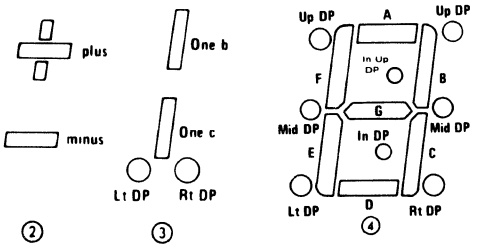

EB404

Pin	④ a	b ②③④	c ④	d ④	e ④	f ④	g ④	h ④	④ i	④ j	④ k	l ④
1	BP	COM	COM	B1	B1	B1	BP	B1	BP	BP	BP	BP
2	NC	(—)	NC	C1	C1	C1	NC	C1	NC	NC	PM	BP
3	NC	B-C	NC	D1	D1	D1	(PM)	D1	PM	NC	ONE	DP1
4	NC	NC	NC	E1	E1	E1	(←)	E1	K	NC	NC	F1
5	E1	NC	4E	NC	DP	DP	NC	DP	NC	E1	E1	G1
6	D1	NC	4D	C2	C2	C2	NC	C2	NC	D1	D1	E1
7	C1	NC	4C	D2	D2	D2	NC	D2	NC	C1	C1	D1
8	DP1	4DP	4DP	E2	E2	E2	NC	E2	NC	NC	NC	NC
9	E2	3E	3E	NC	DP	DP	E3	DP	E3	E2	E2	C1
10	D2	3D	3D	C3	C3	C3	D3	C3	D3	D2	D2	B1
11	C2	3C	3C	D3	D3	D3	C3	D3	C3	C2	C2	A1
12	DP2	3DP	3DP	E3	E3	E3	NC	E3	DP	NC	NC	NC
13	E3	2E	2E	NC	DP	DP	E2	NC	E2	E3	E3	DP2
14	D3	2D	2D	NC	NC	C4	D2	C4	D2	D3	D3	F2
15	C3	2C	2C	NC	NC	D4	C2	D4	C2	C3	C3	G2
16	DP3	2DP	2DP	NC	NC	E4	NC	E4	NC	NC	NC	E2
17	E4	1E	1E	C4	NC	NC	E1	NC	E1	E4	NC	D2
18	D4	1D	1D	A,D,G,	K	NC	D1	NC	D1	D4	NC	C2
19	C4	1C	1C	E4	Y	NC	C1	NC	C1	C4	NC	B2
20	B4	1B	1B	B1	B1	B1	B1	B1	B1	B4	BP	A2
21	A4	1A	1A	A1	A1	A1	A1	A1	A1	A4	NC	DP3
22	F4	1F	1F	F1	F1	F1	F1	F1	F1	F4	NC	F3
23	G4	1G	1G	G1	G1	G1	G1	G1	G1	G4	NC	G3
24	B3	2B	2B	B2	B2	B2	B2	B2	B2	B3	NC	E3
25	A3	2A	2A	A2	A2	A2	A2	A2	A2	A3	B3	D3
26	F3	2F	2F	F2	F2	F2	F2	F2	F2	F3	A3	C3
27	G3	2G	2G	G2	G2	G2	G2	G2	G2	G3	F3	B3
28	Colon	L	L	L	CLN	CLN	CLN	L	CLN	L	G3	A3
29	B2	3B	3B	B3	B3	B3	B3	B3	B3	B2	NC	NC
30	A2	3A	3A	A3	A3	A3	A3	A3	A3	A2	B2	DP4
31	F2	3F	3F	F3	F3	F3	F3	F3	F3	F2	A2	F4
32	G2	3G	3G	G3	G3	G3	G3	G3	G3	G2	F2	G4
33	NC	NC	NC	NC	NC	NC	NC	NC	NC	NC	G2	E4
34	B1	NC	4B	NC	NC	B4	NC	B4	NC	B1	COL.	D4
35	A1	NC	4A	NC	NC	A4	NC	A4	NC	A1	B1	NC
36	F1	NC	4F	NC	NC	F4	NC	F4	NC	F1	A1	C4
37	G1	NC	4G	NC	NC	G4	NC	G4	NC	G1	F1	B4
38	NC	(←)	NC	NC	(Z)	NC	NC	NC	NC	NC	G1	A4
39	NC	(:)	NC	B4	(X)	NC	(AM)	NC	AM	NC	NC	BP
40	NC	COM	COM	NC	NC	NC	NC	NC	NC	BP	AM	BP

Continued on next page

48. SCHEMATIC DRAWINGS

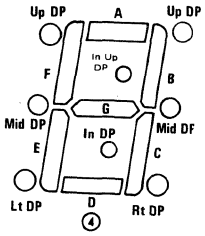

EB404

Pin	④ m	④ n	o ④	p	q ④	④ r	● s
1	B1	BP	BP	BP	BP	BP	BP
2	Tips 1	NC	G1	NC	NC	NC	NC
3	E1	AC	E1	(PM)	PM	ONE	ONE
4	D1	ONE	D1	ONE	ONE	NC	NC
5	C1	DP1	C1	NC	NC	NC	NC
6	Tips 2	E1	E2	NC	NC	NC	NC
7	E2	D1	D2	NC	NC	NC	NC
8	D2	C1	C2	NC	NC	DP1	DP1
9	C2	DP2	E3	E1	E1	E1	E1
10	NC	E2	D3	D1	D1	D1	D1
11	Tips 3	D2	C3	C1	C1	C1	C1
12	E3	C2	DP1	NC	NC	DP2	DP2
13	D3	DP3	E4	E2	E2	E2	E2
14	C3	E3	D4	D2	D2	D2	D2
15	Tips 4	D3	C4	C2	C2	C2	C2
16	E4	C3	DP2	NC	NC	DP3	DP3
17	D4	DP4	E5	E3	E3	E3	E3
18	C4	E4	D5	D3	D3	D3	D3
19	NC	D4	C5	C3	C3	C3	C3
20	NC	C4	B5	B3	B3	B3	B3
21	NC	B4	A5	A3	A3	A3	A3
22	G4	A4	F5	F3	F3	F3	F3
23	B4	F4	G5	G3	G3	G3	G3
24	A4	G4	B4	B2	B2	B2	B2
25	F4	B3	A4	A2	A2	A2	A2
26	G3	A3	F4	F2	F2	F2	F2
27	B3	F3	G4	G2	G2	G2	G2
28	A3	G3	B3	CLN	CLN	CLN	CLN
29	F3	B2	A3	B1	B1	B1	B1
30	NC	A2	F3	A1	A1	A1	A1
31	G2	F2	G3	F1	F1	F1	F1
32	B2	G2	NC	G1	G1	G1	G1
33	A2	B1	B2	NC	NC	NC	NC
34	F2	A1	A2	NC	NC	NC	NC
35	G1	F1	F2	NC	NC	NC	NC
36	B1	G1	G2	NC	NC	NC	NC
37	A1	NC	NC	NC	NC	NC	NC
38	F1	(OVER)	B1	NC	NC	(LO BAT)	(←)
39	NC	(-)	A1	(AM)	AM	NC	NC
40	NC	NC	F1	NC	BP	BP	BP

EB405

Pin	a ④	b ④	c ●	d ④
1	BP	B1	BP	BP
2	(←)	C1	BP	G1
3	(-)	D1	(←)	E1
4	DP4	E1	(+)	D1
5	E4	DP	(-)	C1
6	D4	C2	(~)	E2
7	C4	D2	NC	D2
8	DP3	E2	NC	C2
9	E3	DP	DP1	E3
10	D3	C3	H	D3
11	C3	D3	DP2	C3
12	DP2	E3	F1	DP1
13	E2	C4	G1	E4
14	D2	D4	E1	D4
15	C2	E4	D1	C4
16	DP1	C5	NC	DP2
17	E1	D5	C1	E5
18	D1	E5	B1	D5
19	C1	G5	A1	C5
20	B1	B1	DP3	B5
21	A1	A1	F2	A5
22	F1	F1	G2	F5
23	G1	G1	E2	G5
24	B2	B2	D2	B4
25	A2	A2	NC	A4
26	F2	F2	C2	F4
27	G2	G2	B2	G4
28	CLN	B3	A2	B3
29	B3	A3	DP4	A3
30	A3	F3	F3	F3
31	F3	G3	G3	G3
32	G3	CLN	E3	L2
33	L2	B4	D3	B2
34	B4	A4	NC	A2
35	A4	F4	C3	F2
36	F4	G4	B3	G2
37	G4	L	A3	L1
38	DES	B5	NC	B1
39	(+)	A5	BP	A1
40	NC	F5	BP	F1

48. SCHEMATIC DRAWINGS

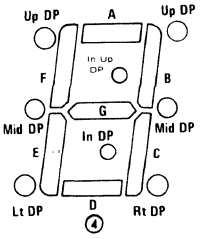

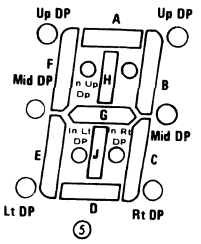

EB454

Pin	a ④
1	BP
2	BP
3	DP1
4	F1
5	G1
6	E1
7	D1
8	NC
9	NC
10	C1
11	B1
12	A1
13	DP2
14	F2
15	G2
16	E2
17	D2
18	NC
19	NC
20	C2
21	B2
22	A2
23	DP3
24	F3
25	G3
26	E3
27	D3
28	NC
29	NC
30	C3
31	B3
32	A3
33	DP4
34	F4
35	G4
36	E4
37	D4
38	NC
39	NC
40	C4
41	B4
42	A4
43	NC
44	BP
45	BP

EB464

Pin	a ⑤
1	E0
2	D0
3	C0
4	E1
5	D1
6	C1
7	CLN
8	E2
9	D2
10	C2
11	E3
12	D3
13	C3
14	E4
15	J4
16	D4
17	C4
18	E5
19	D5
20	J5
21	C5
22	G5
23	BP
24	AL
25	B5
26	A5
27	F5
28	B4
29	A4
30	H4
31	F4
32	G4
33	B3
34	A3
35	F3
36	G3
37	B2
38	F2
39	G2
40	B1
41	A1
42	F1
43	G1
44	B0
45	F0
46	G0

EB466

Pin	④ a	④ b	④ c
1	BP	BP	E1
2	E1	E1	A1,D1
3	(SU)	A1,D1	C1
4	D1	C1	E2
5	C1	E2	D2
6	M	D2	C2
7	E2	C2	DP1
8	D2	DP	E3
9	(TU)	E3	A3
10	C2	A3,D3	C3
11	E3	C3	E4
12	(W)	E4	D4
13	D3	D4	C4
14	C3	C4	E5
15	(TH)	E5	J5
16	E4	J5	D5
17	D4	D5	C5
18	(F)	C5	E6
19	C4	E6	D6
20	(DATE)	I6	J6
21	(SA)	D6	C6
22	E5	C6	G6
23	D5	G6	BP
24	C5		DP2 Up
25	B5	B6	B6
26	A5	A6	A6
27	F5	F6	F6
28	G5	B5	B5
29	B4	A5	A5
30	A4	H5	H5
31	F4	F5	F5
32	G4	G5	G5
33	B3	B4	B4
34	A3	A4	A4
35	F3	F4	F4
36	G3	G4	G4
37	B2	B3	B3
38	A2	F3	F3
39	F2	G3	G3
40	G2	B2	B2
41	CLN	A2	A2
42	B1	F2	F2
43	A1	G2	G2
44	F1	B1	B1
45	G1	F1	F1
46	ONE	G1	G1

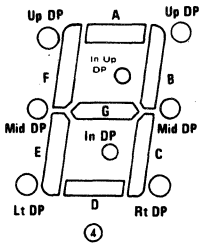

EB505

Pin	a ④	b ④	c ④
1	BP	BP	COM
2	BP	NC	NC
3	(←—)	NC	NC
4	(+)	NC	NC
5	(-)	NC	NC
6	(∿)	E1	5E
7	NC	D1	5D
8	NC	C1	5C
9	DP1	DP1	5DP
10	H	E2	4E
11	DP2	D2	4D
12	F1	C2	4C
13	G1	DP2	4DP
14	E1	E3	3E
15	D1	D3	3D
16	NC	C3	3C
17	C1	DP3	3DP
18	B1	E4	2E
19	A1	D4	2D
20	DP3	C4	2C
21	F2	DP4	2DP
22	G2	E5	1E
23	E2	D5	1D
24	D2	C5	1C
25	NC	B5	1B
26	C2	A5	1A
27	B2	F5	1F
28	A2	G5	1G
29	DP4	B4	2B
30	F3	A4	2A
31	G3	F4	2F
32	E3	G4	2G
33	D3	CLN	L
34	NC	B3	3B
35	C3	A3	3A
36	B3	F3	3F
37	A3	G3	3G
38	DP4	B2	4B
39	F4	A2	4A
40	G4	F2	4F
41	E4	G2	4G
42	D4	NC	NC
43	NC	B1	5B
44	C4	A1	5A
45	B4	F1	5F
46	A4	G1	5G
47	NC	NC	NC
48	NC	NC	NC
49	BP	NC	NC
50	BP	NC	NC

EB506

Pin	a ④	b ④
1	COM	COM
2	6E	6E
3	6D	6D
4	6C	6C
5	6DP	6DP
6	5E	5E
7	5D	5D
8	5C	5C
9	5DP	5DP
10	4E	4E
11	4D	4D
12	4C	4C
13	4DP	4DP
14	3E	3E
15	3D	3D
16	3C	3C
17	3DP	3DP
18	2E	2E
19	2D	2D
20	2C	2C
21	2DP	2DP
22	1E	1E
23	1D	1D
24	1C	1C
25	1B	1B
26	1A	1A
27	1F	1F
28	1G	1G
29	2B	2B
30	2A	2A
31	2F	2F
32	2G	2G
33	L1	2L
34	3B	3B
35	3A	3A
36	3F	3F
37	3G	3G
38	4B	4B
39	4A	4A
40	4F	4F
41	4G	4G
42	L2	1L
43	5B	5B
44	5A	5A
45	5F	5F
46	5G	5G
47	6B	6B
48	6A	6A
49	6F	6F
50	6G	6G

48. SCHEMATIC DRAWINGS

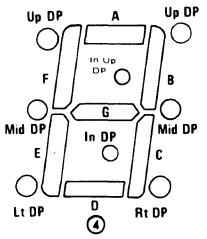

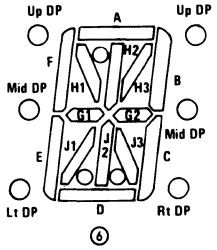

EB526

Pin	a ④
1	BP
2	DP1
3	E1
4	D1
5	C1
6	DP2
7	E2
8	D2
9	C2
10	DP3
11	E3
12	D3
13	C3
14	DP4
15	E4
16	D4
17	C4
18	DP5
19	E5
20	D5
21	C5
22	DP6
23	E6
24	D6
25	C6
26	B6

Pin	
27	A6
28	F6
29	G6
30	B5
31	A5
32	F5
33	G5
34	CLN 2
35	B4
36	A4
37	F4
38	G4
39	B3
40	A3
41	F3
42	G3
43	CLN 1
44	B2
45	A2
46	F2
47	G2
48	B1
49	A1
50	F1
51	G1
52	BP

Pin	b ④
1	BELL
2	D1
3	C1
4	E2
5	D2
6	C2
7	B5
8	A5
9	H5
10	F5
11	G5
12	E5
13	DP
14	J5
15	D5
16	C5
17	G6
18	E6
19	D6
20	J6
21	C6
22	B6
23	H6
24	A6
25	F6
26	BP

Pin	
27	D4
28	C4
29	G4
30	B4
31	A4
32	F4
33	E4
34	B3
35	A3
36	F3
37	G3
38	E3
39	D3
40	C3
41	CLN
42	G2
43	B2
44	A2
45	F2
46	B1
47	A1
48	F1
49	G1
50	E1
51	(CHRONO)
52	(DATE)

EB528

Pin	a ⑥
1	BP1
2	H1-1
3	A1
4	H1-2
5	A2
6	H1-3
7	A3
8	H1-4
9	A4
10	NC
11	NC
12	NC
13	NC
14	NC
15	NC
16	NC
17	NC
18	H1-5
19	A5
20	H1-6
21	A6
22	H1-7
23	A7
24	H1-8
25	A8
26	BP0

Pin	⑥
27	BP2
28	J3-8
29	J2-8
30	J3-7
31	J2-7
32	J3-6
33	J2-6
34	J3-5
35	J2-5
36	NC
37	NC
38	NC
39	NC
40	NC
41	NC
42	NC
43	NC
44	J3-4
45	J2-4
46	J3-3
47	J2-3
48	J3-2
49	J2-2
50	J3-1
51	J2-1
52	BP3

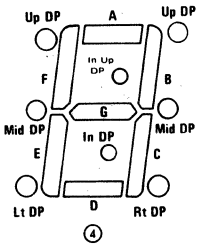

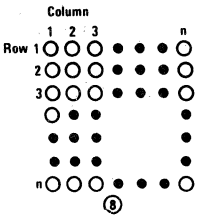

EB544

Pin	a 8
1	←DN
2	#0 R
3	#1 R
4	#2 R
5	#3 R
6	#4 R
7	#5 R
8	(5) R
9	#6 R
10	#7 R
11	#8 R
12	#9 R
13	#10 R
14	(10) R
15	#11 R
16	#12 R
17	#13 R
18	#14R
19	#15 R
20	(15) R
21	#16 R
22	#17 R
23	#18 R
24	#19 R
25	#20 R
26	(20) R
27	BP

Pin	8
28	→UP
29	#20 L
30	(20) L
31	#19 L
32	#18 L
33	#17 L
34	#16 L
35	#15 L
36	(15) L
37	#14 L
38	#13 L
39	#12 L
40	#11 L
41	#10 L
42	(10) L
43	#9 L
44	#8 L
45	#7 L
46	#6 L
47	#5 L
48	(5) L
49	#4 L
50	#3 L
51	#2 L
52	#1 L
53	#0 L
54	BP

Pin	b 4
1	BP
2	BP
3	NC
4	DP1
5	F1
6	G1
7	E1
8	D1
9	NC
10	NC
11	NC
12	NC
13	C1
14	B1
15	A1
16	DP2
17	F2
18	G2
19	E2
20	D2
21	NC
22	NC
23	NC
24	NC
25	C2
26	B2
27	A2
28	DP3

Pin	4
29	F3
30	G3
31	E3
32	D3
33	NC
34	NC
35	NC
36	NC
37	C3
38	B3
39	A3
40	DP4
41	F4
42	G4
43	E4
44	D4
45	NC
46	NC
47	NC
48	NC
49	C4
50	B4
51	A4
52	NC
53	NC
54	BP
55	BP

EB655

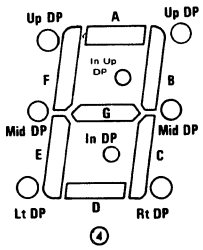

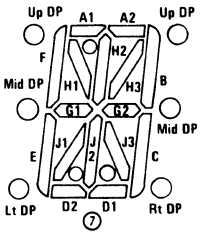

EB664a-b

Pin	a
1	E-1
2	J1-1
3	D2-1
4	J2-1
5	D1-1
6	J3-1
7	C-1
8	G2-1
9	E-2
10	J1-2
11	D2-2
12	J2-2
13	D1-2
14	J3-2
15	C-2
16	G2-2
17	E-3
18	J1-3
19	D2-3
20	J2-3
21	D1-3
22	J3-3
23	C-3
24	G2-3
25	E4
26	J1-4
27	D2-4
28	J2-4
29	D1-4
30	J3-4
31	C-4
32	G2-4
33	BP

Pin	
34	BP
35	B-4
36	H3-4
37	A2-4
38	H2-4
39	A1-4
40	H1-4
41	F-4
42	G1-4
43	B-3
44	H3-3
45	A2-3
46	H2-3
47	A1-3
48	H1-3
49	F-3
50	G1-3
51	B-2
52	H3-2
53	A2-2
54	H2-2
55	A1-2
56	H1-2
57	F-2
58	G1-2
59	B-1
60	H3-1
61	A2-1
62	H2-1
63	A1-1
64	H1-1
65	F-1
66	G1-1

Pin	b
1	BP
2	G1-1
3	E1
4	J1-1
5	D1-1
6	J2-1
7	D2-1
8	J3-1
9	C1
10	G1-2
11	E2
12	J1-2
13	D1-2
14	J2-2
15	D2-2
16	J3-2
17	C2
18	G1-3
19	E3
20	J1-3
21	D1-3
22	J2-3
23	D2-3
24	J3-3
25	C3
26	G1-4
27	E4
28	J1-4
29	D1-4
30	J2-4
31	D2-4
32	J3-4
33	C4

Pin	
34	G2-4
35	B4
36	H3-4
37	A2-4
38	H2-4
39	A1-4
40	H1-4
41	F4
42	G2-3
43	B3
44	H3-3
45	A2-3
46	H2-3
47	A1-3
48	H1-3
49	F3
50	G2-2
51	B2
52	H3-2
53	A2-2
54	H2-2
55	A1-2
56	H1-2
57	F2
58	G2-1
59	B1
60	H3-1
61	A2-1
62	H2-1
63	A1-1
64	H1-1
65	F1
66	BP

48. SCHEMATIC DRAWINGS

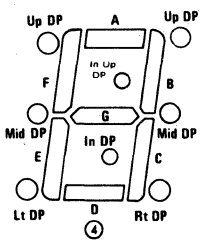

EB684

Pin	a ④	Pin	
1	BP	35	A8
2	E1	36	F8
3	D1	37	G8
4	C1	38	B7
5	DP1	39	A7
6	E2	40	F7
7	D2	41	G7
8	C2	42	CLN3
9	DP2	43	B6
10	NC	44	A6
11	E3	45	F6
12	D3	46	G6
13	C3	47	B5
14	DP3	48	A5
15	E4	49	F5
16	D4	50	G5
17	C4	51	CLN 2
18	DP4	52	B4
19	E5	53	A4
20	D5	54	F4
21	C5	55	G4
22	DP5	56	B3
23	E6	57	A3
24	D6	58	F3
25	C6	59	G3
26	DP6	60	CLN 1
27	E7	61	B2
28	D7	62	A2
29	C7	63	F2
30	DP7	64	G2
31	E8	65	B1
32	D8	66	A1
33	C8	67	F1
34	B8	68	G1

EB688a

Pin	a ④	Pin	
1	BP	35	A8
2	E1	36	F8
3	D1	37	G8
4	C1	38	B7
5	DP1	39	A7
6	E2	40	F7
7	D2	41	G7
8	C2	42	CLN 3
9	DP2	43	B6
10	BP	44	A6
11	E3	45	F6
12	D3	46	G6
13	C3	47	B5
14	DP3	48	A5
15	E4	49	F5
16	D4	50	G5
17	C4	51	CLN 2
18	DP4	52	B4
19	E5	53	A4
20	D5	54	F4
21	C5	55	G4
22	DP5	56	B3
23	E6	57	A3
24	D6	58	F3
25	C6	59	G3
26	DP6	60	CLN 1
27	E7	61	B2
28	D7	62	A2
29	C7	63	F2
30	DP7	64	G2
31	E8	65	B1
32	D8	66	A1
33	C8	67	F1
34	B8	68	G1

EB688 b

Pin No.	b ④	Pin No.	b ④
1	COM	35	1A
2	8E	36	1F
3	8D	37	1G
4	8C	38	2B
5	8DP	39	2A
6	7E	40	2F
7	7D	41	2G
8	7C	42	L1
9	7DP	43	3B
10	NC	44	3A
11	6E	45	3F
12	6D	46	3G
13	6C	47	4B
14	6DP	48	4A
15	5E	49	4F
16	5D	50	4G
17	5C	51	L2
18	5DP	52	5B
19	4E	53	5A
20	4D	54	5F
21	4C	55	5G
22	4DP	56	6B
23	3E	57	6A
24	3D	58	6F
25	3C	59	6G
26	3DP	60	L3
27	2E	61	7B
28	2D	62	7A
29	2C	63	7F
30	2DP	64	7G
31	1E	65	8B
32	1D	66	8A
33	1C	67	8F
34	1B	68	8G

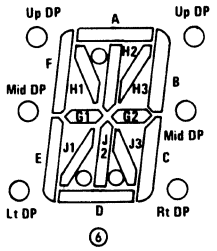

EB1308

Pin	a ⑥
1	BP
2	E1
3	J1-1
4	J2-1
5	D1
6	J3-1
7	C1
8	G2-1
9	DP1
10	E2
11	J1-2
12	J2-2
13	D2
14	J3-2
15	C2
16	G2-2
17	DP2
18	E3
19	J1-3
20	J2-3
21	D3
22	J3-3
23	C3
24	G2-3
25	DP3
26	E4
27	J1-4
28	J2-4
29	D4
30	J3-4
31	C4
32	G2-4
33	DP4

Pin	
34	E5
35	J1-5
36	J2-5
37	D5
38	J3-5
39	C5
40	G2-5
41	DP5
42	E6
43	J1-6
44	J2-6
45	D6
46	J3-6
47	C6
48	G2-6
49	DP6
50	E7
51	J1-7
52	J2-7
53	D7
54	J3-7
55	C7
56	G2-7
57	DP7
58	E8
59	J1-8
60	J2-8
61	D-8
62	J3-8
63	C8
64	G2-8
65	DP8
66	DP8 Up

Pin	
67	B8
68	H3-8
69	H2-8
70	A8
71	H1-8
72	F8
73	G1-8
74	DP7 Up
75	B7
76	H3-7
77	H2-7
78	A7
79	H1-7
80	F7
81	G1-7
82	DP6 Up
83	B6
84	H3-6
85	H2-6
86	A6
87	H1-6
88	F6
89	G1-6
90	DP5 Up
91	B5
92	H3-5
93	H2-5
94	A5
95	H1-5
96	F5
97	G1-5
98	DP4 Up
99	B4

Pin	
100	H3-4
101	H2-4
102	A4
103	H1-4
104	F4
105	G1-4
106	DP3 Up
107	B3
108	H3-3
109	H2-3
110	A3
111	H1-3
112	F3
113	G1-3
114	DP2 Up
115	B2
116	H3-2
117	H2-2
118	A2
119	H1-2
120	F2
121	G1-2
122	DP1 Up
123	B1
124	H3-1
125	H2-1
126	A1
127	H1-1
128	F1
129	G1-1
130	BP

48. SCHEMATIC DRAWINGS

EB341zz 7 x 9 Dot Matrix LCD

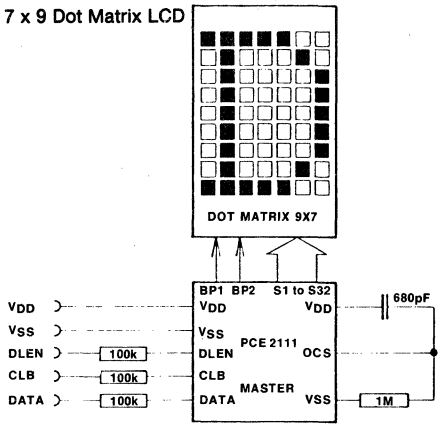

EB248zz 8-Digit LCD

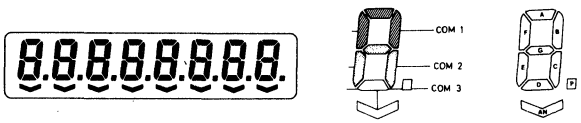

Connection Table

Pad	1	2	3	4	5	6	7	8	9	10	11	12	13	14	15	16	17	18	19	20	21	22	23	24
Com 1	F1	A1	B1	F2	A2	B2	F3	A3	B3	F4	A4	B4	F5	A5	B5	F6	A6	B6	F7	A7	B7	F8	A8	B8
Com 2	E1	G1	C1	E2	G2	C2	E3	G3	C3	E4	G4	C4	E5	G5	C5	E6	G6	C6	E7	G7	C7	E8	G8	C8
Com 3	AN1	D1	P1	AN2	D2	P2	AN3	D3	P3	AN4	D4	P4	AN5	D5	P5	AN6	D6	P6	AN7	D7	P7	AN8	D8	P8

EB3040zz 40-Character 5x7 Dot Matrix Display Driver

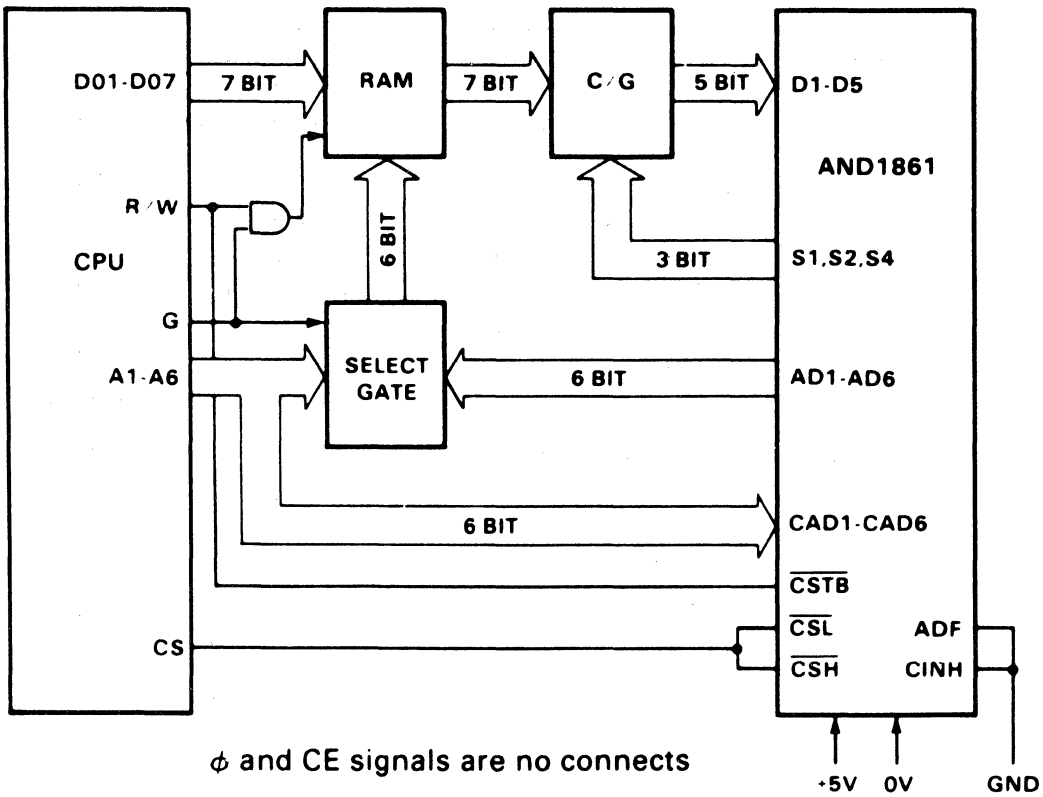

ϕ and CE signals are no connects

48. SCHEMATIC DRAWINGS

EB125zz — LCD General Purpose Display

Connection Table

Pad	1	2	3	4	5	6	7	8	9	10	11	12
Com 1	P1	D1	"1"	P2	D2	–	P3	D3	Low battery	P4	D4	Con-tinuity
Com 2	E1	G1	C1	E2	G2	C2	E3	G3	C3	E4	G4	C4
Com 3	F1	A1	B1	F2	A2	B2	F3	A3	B3	F4	A4	B4

Backplane Connections: Com 1 pad 15; Com 2 pad 14; Com 3 pad 13.

EB528zy — 15 Segment Multi Character Array w/Display Control & Character Set

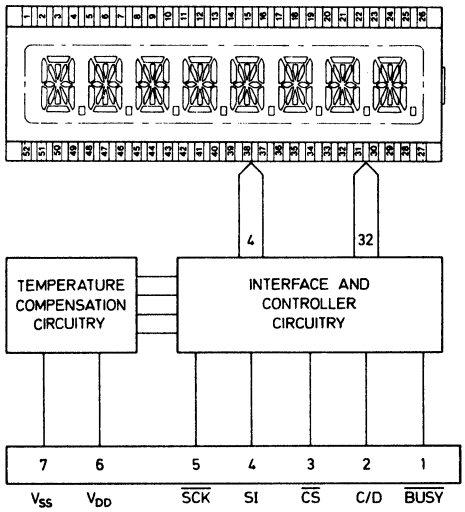

EB2616zz — 46-Character 5x7 Dot Matrix Display Driver

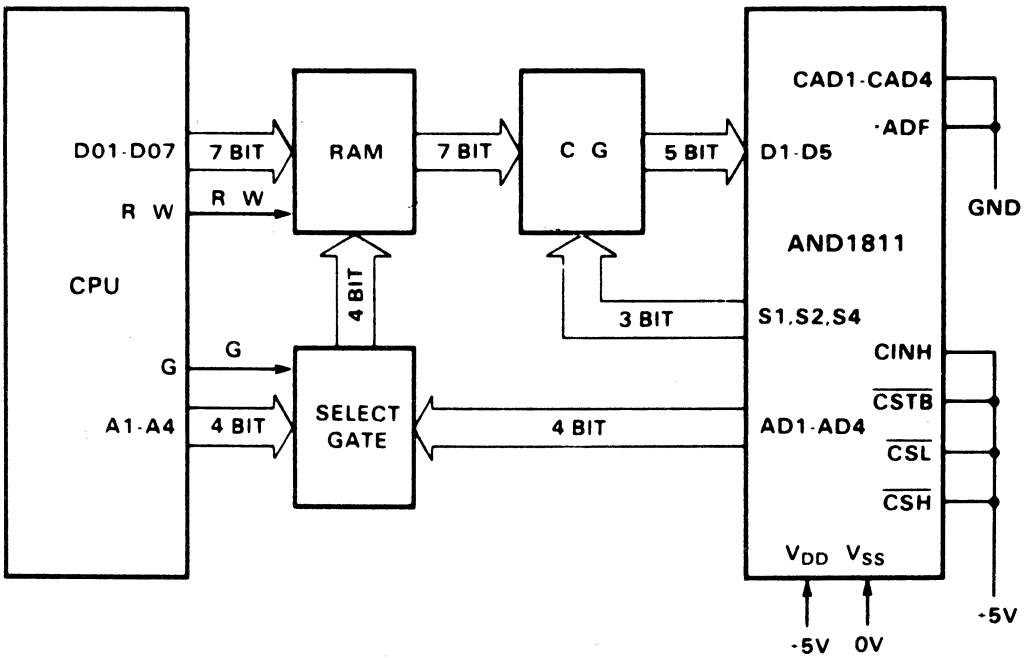

ϕ and CE signals are no connects

48. SCHEMATIC DRAWINGS

EB1432zz

LCD Alphanumeric Display

BLOCK DIAGRAM

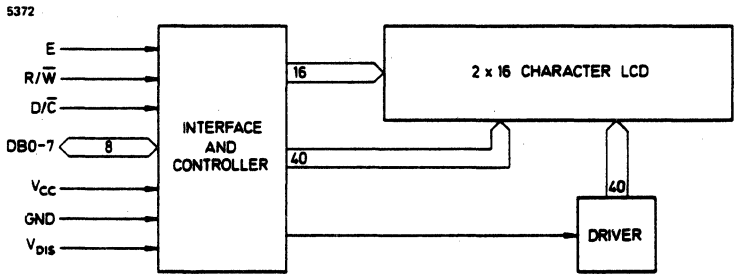

Connections

1	Ground	6	E	11	DB4
2	V_{CC}	7	DB0	12	DB5
3	V_{DIS}	8	DB1	13	DB6
4	D/$\overline{C}$	9	DB2	14	DB7
5	R/$\overline{W}$	10	DB3		

EB121zz

Single Character 5 x 7 Dot Matrix Display

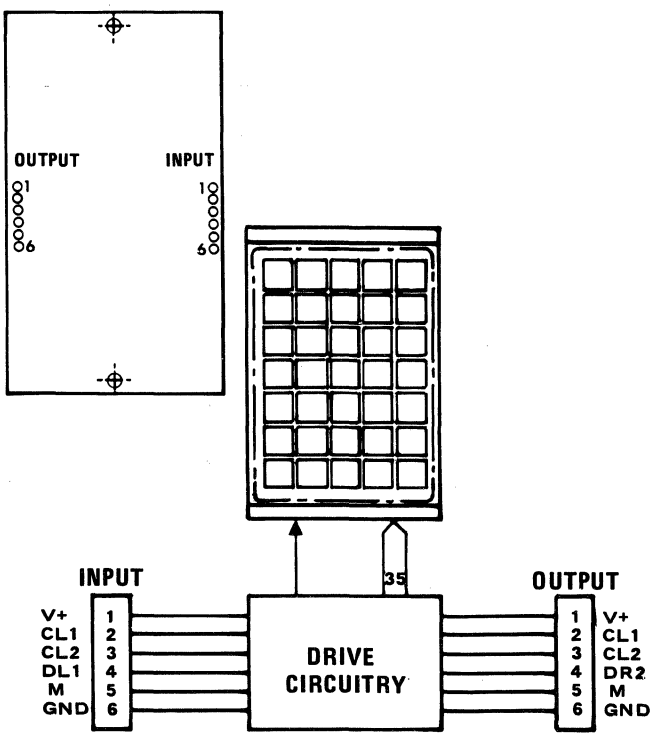

EB528zz

LCD Alphanumeric Display

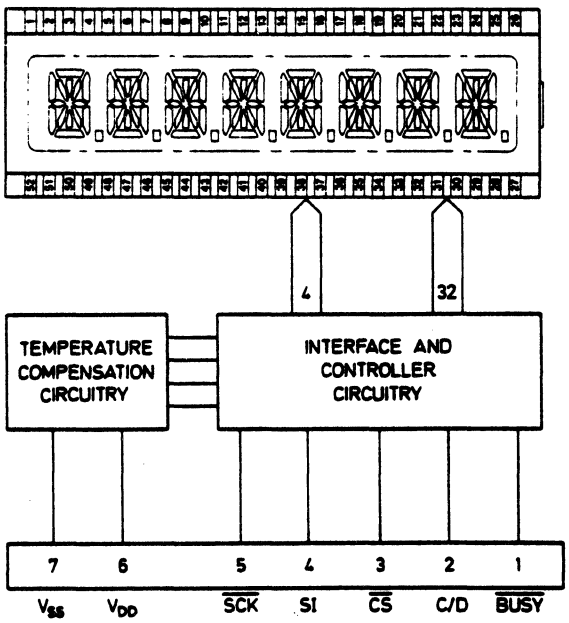

48. SCHEMATIC DRAWINGS

EB1440zz Alphanumeric LCD Dot Matrix Module

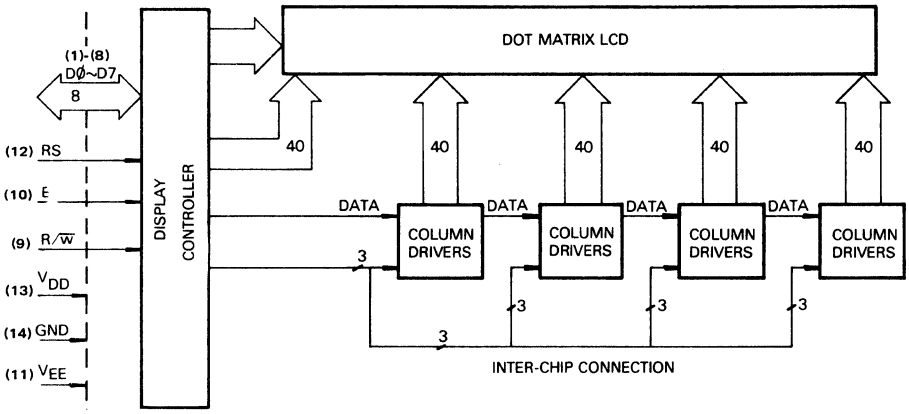

EB103 LCD Clock Display

Contact-Nr.	COMMON 1	COMMON 2		Contact-Nr.	COMMON 1	COMMON 2		Contact-Nr.	COMMON 1	COMMON 2
1	f2	e2		35	X4	Y4		69	X32	Y32
2	C 1	–		36	X3	Y3		70	X31	Y31
3	a2/d2	g2		37	X2	Y2		71	X30	Y30
4	b2	c2		38	C 1	–		72	–	AL
5	f3	e3		39	X1	Y1		73	a1	h
6	g3	d3		40	–	C 2		74	f1	e1
7	b3	c3		41	X60	Y60		75	g1	d1
8	P	–		42	X59	Y59		76	b1	c1
9	a3	DP1/2		43	X58	Y58		77	–	C 2
10	X29	Y29		44	X57	Y57		78	NC	NC
11	X28	Y28		45	X56	Y56				
12	X27	Y27		46	X55	Y55				
13	X26	Y26		47	X54	Y54				
14	X25	Y25		48	X53	Y53				
15	X24	Y24		49	X52	Y52				
16	X23	Y23		50	X51	Y51				
17	X22	Y22		51	X50	Y50				
18	X21	Y21		52	X49	Y49				
19	X20	Y20		53	X48	Y48				
20	X19	Y19		54	X47	Y47				
21	X18	Y18		55	X46	Y46				
22	X17	Y17		56	X45	Y45				
23	X16	Y16		57	X44	Y44				
24	X15	Y15		58	X43	Y43				
25	X14	Y14		59	X42	Y42				
26	X13	Y13		60	X41	Y41				
27	X12	Y12		61	X40	Y40				
28	X11	Y11		62	X39	Y39				
29	X10	Y10		63	X38	Y38				
30	X9	Y9		64	X37	Y37				
31	X8	Y8		65	X36	Y36				
32	X7	Y7		66	X35	Y35				
33	X6	Y6		67	X34	Y34				
34	X5	Y5		68	X33	Y33				

Unused segments to be controlled "off"

48. SCHEMATIC DRAWINGS

EB278zy

General Purpose LCD Display

Pad	2	3	4	5	6	7	8	9	10	11	12	13	14	15	16	17	18	19	20	21	22	23	24	25
Com 1	AN1	A1	B1	AN2	A2	B2	AN3	A3	B3	AN4	A4	B4	AN5	A5	B5	AN6	A6	B6	AN7	A7	B7	AN8	A8	B8
Com 2	F1	G1	C1	F2	G2	C2	F3	G3	C3	F4	G4	C4	F5	G5	C5	F6	G6	C6	F7	G7	C7	F8	G8	C8
Com 3	E1	D1	P1	E2	D2	P2	E3	D3	P3	E4	D4	P4	E5	D5	P5	E6	D6	P6	E7	D7	P7	E8	D8	P8

Backplane Connections: Com 1 pad 27; Com 2 pad 26; Com 3 pad 1.

EB278zz

General Purpose LCD Display

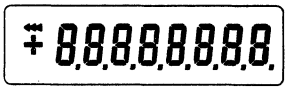

Pad	1	2	3	4	5	6	7	8	9	10	11	12	13	14	15	16	17	18	19	20	21	22	23	24
Com 1	–	D1	DP1	+	D2	DP2	◀◀◀	D3	DP3		D4	DP4		D5	DP5		D6	DP6		D7	DP7		D8	DP8
Com 2	E1	G1	C1	E2	G2	C2	E3	G3	C3	E4	G4	C4	E5	G5	C5	E6	G6	C6	E7	G7	C7	E8	G8	C8
Com 3	F1	A1	B1	F2	A2	B2	F3	A3	B3	F4	A4	B4	F5	A5	B5	F6	A6	B6	F7	A7	B7	F8	A8	B8

EB787

Multiplex duty cycle 1:2

Contact-Nr.	COMMON 1	COMMON 2		Contact-Nr.	COMMON 1	COMMON 2		Contact-Nr.	COMMON 1	COMMON 2
1	f2	e2		35	X4	Y4		69	X32	Y32
2	C 1	–		36	X3	Y3		70	X31	Y31
3	a2/d2	g2		37	X2	Y2		71	X30	Y30
4	b2	c2		38	C 1	–		72	–	AL
5	f3	e3		39	X1	Y1		73	a1	h
6	g3	d3		40	–	C 2		74	f1	e1
7	b3	c3		41	X60	Y60		75	g1	d1
8	P	–		42	X59	Y59		76	b1	c1
9	a3	DP1/2		43	X58	Y58		77	–	C 2
10	X29	Y29		44	X57	Y57		78	NC	NC
11	X28	Y28		45	X56	Y56				
12	X27	Y27		46	X55	Y55				
13	X26	Y26		47	X54	Y54				
14	X25	Y25		48	X53	Y53				
15	X24	Y24		49	X52	Y52				
16	X23	Y23		50	X51	Y51				
17	X22	Y22		51	X50	Y50				
18	X21	Y21		52	X49	Y49				
19	X20	Y20		53	X48	Y48				
20	X19	Y19		54	X47	Y47				
21	X18	Y18		55	X46	Y46				
22	X17	Y17		56	X45	Y45				
23	X16	Y16		57	X44	Y44				
24	X15	Y15		58	X43	Y43				
25	X14	Y14		59	X42	Y42				
26	X13	Y13		60	X41	Y41				
27	X12	Y12		61	X40	Y40				
28	X11	Y11		62	X39	Y39				
29	X10	Y10		63	X38	Y38				
30	X9	Y9		64	X37	Y37				
31	X8	Y8		65	X36	Y36				
32	X7	Y7		66	X35	Y35				
33	X6	Y6		67	X34	Y34				
34	X5	Y5		68	X33	Y33				

Unused segments to be controlled "off"

48. SCHEMATIC DRAWINGS

EB3216zx **EB3216zz**

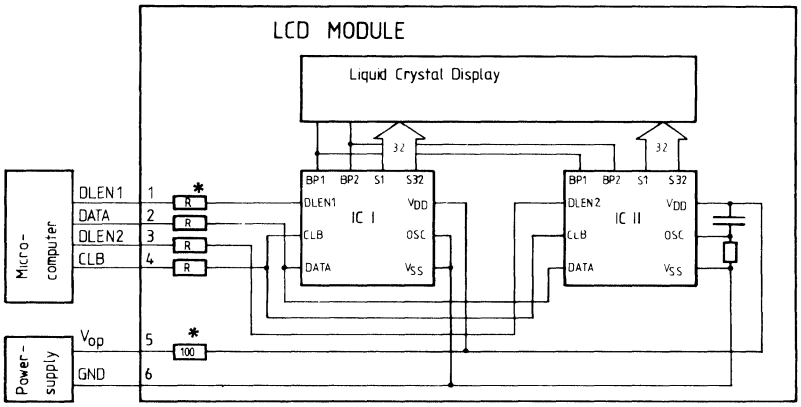

Correspondence between IC-outputs and LCD-segments

*Note: For EB3216zy resistors are external (not included in module).

Output	IC S	1	2	3	4	5	6	7	8	9	10	11	12	13	14	15	16	17	18	19	20	21	22	23	24	25	26	27	28	29	30	31	32
Segment	BP1	f	e	p	d	f	e	p	d	f	e	p	d	f	e	p	d	f	e	p	d	f	e	p	d	f	e	p	d	f	e	p	d
	BP2	a	g	b	c	a	g	b	c	a	g	b	c	a	g	b	c	a	g	b	c	a	g	b	c	a	g	b	c	a	g	b	c
Digit	DLEN1	1	1	1	1	2	2	2	2	3	3	3	3	4	4	4	4	5	5	5	5	6	6	6	6	7	7	7	7	8	8	8	8
	DLEN2	9	9	9	9	10	10	10	10	11	11	11	11	12	12	12	12	13	13	13	13	14	14	14	14	15	15	15	15	16	16	16	16

Digits:

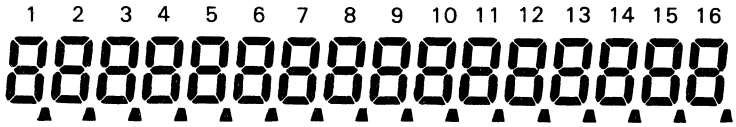

Segments:

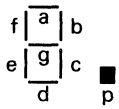

EB3816zz 16-Digit LCD For Telecommunication Applications

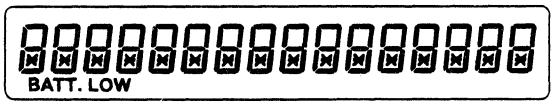

Pad	2	3	4	5	6	7	8	9	10	11	12	13	14	15	16	17	18
Com 1		F1	A1	F2	A2	F3	A3	F4	A4	F5	A5	F6	A6	F7	A7	F8	A8
Com 2		G1	B1	G2	B2	G3	B3	G4	B4	G5	B5	G6	B6	G7	B7	G8	B8
Com 3		E1	C1	E2	C2	E3	C3	E4	C4	E5	C5	E6	C6	E7	C7	E8	C8
Com 4		D1	✱1	D2	✱2	D3	✱3	D4	✱4	D5	✱5	D6	✱6	D7	✱7	D8	✱8
Com 5	Batt. Low																

Pad	19	20	21	22	23	24	25	26	27	28	29	30	31	32	33	34
Com 1	F9	A9	F10	A10	F11	A11	F12	A12	F13	A13	F14	A14	F15	A15	F16	A16
Com 2	G9	B9	G10	B10	G11	B11	G12	B12	G13	B13	G14	B14	G15	B15	G16	B16
Com 3	E9	C9	E10	C10	E11	C11	E12	C12	E13	C13	E14	C14	E15	C15	E16	C16
Com 4	D9	✱9	D10	✱10	D11	✱11	D12	✱12	D13	✱13	D14	✱14	D15	✱15	D16	✱16

Backplane Connections: Com 1 pad 35; Com 2 pad 36; Com 3 pad 37; Com 4 pad 38; Com 5 pad 1.

48. SCHEMATIC DRAWINGS

EB6816zy

CONTACT NR.	1	2	3	4	5	6	7	8	9	10	11	12	13	14	15	16	17	18	19	20	21	22	23	24	25	26	27	28	29	30	31	32	33	34	
COMMON I	–	g1	c1	g2	c2	g3	c3	g4	c4	g5	c5	g6	c6	g7	c7	g8	c8	g9	c9	g10	c10	g11	c11	g12	c12	g13	c13	g14	c14	g15	c15	g16	c16	–	COMMON III
COMMON II	COM II	e1	d1	e2	d2	e3	d3	e4	d4	e5	d5	e6	d6	e7	d7	e8	d8	e9	d9	e10	d10	e11	d11	e12	d12	e13	d13	e14	d14	e15	d15	e16	d16	COM IV	COMMON IV

	68	67	66	65	64	63	62	61	60	59	58	57	56	55	54	53	52	51	50	49	48	47	46	45	44	43	42	41	40	39	38	37	36	35	
COMMON I	COM I	a1	b1	a2	b2	a3	b3	a4	b4	a5	b5	a6	b6	a7	b7	a8	b8	a9	b9	a10	b10	a11	b11	a12	b12	a13	b13	a14	b14	a15	b15	a16	b16	COM III	COMMON III
COMMON II	–	f1	P1	f2	P2	f3	P3	f4	P4	f5	P5	f6	P6	f7	P7	f8	P8	f9	P9	f10	P10	f11	P11	f12	P12	f13	P13	f14	P14	f15	P15	f16	P16	–	COMMON IV

EB6816zz

Multiplex duty cycle 1:4

Unused segments to be controlled "off"

Cont.-Nr.	1	2	3	4	5	6	7	8	9	10	11	12	13	14	15	16	17	18	19	20	21	22	23	24	25	26	27	28	29	30	31	32	33	34
Com 1	C I	C I	e1	e2	NC	e3	NC	e4	NC	e5	NC	e6	NC	e7	NC	e8	NC	NC	e9	e10	NC	NC	e11	NC	e12	NC	e13	NC	e14	NC	e15	e16		
Com 2			d1	d2		d3		d4		d5		d6		d7		d8			d9	d10			d11		d12		d13		d14		d15	d16	C II	C II
Com 3			g1	g2		g3		g4		g5		g6		g7	NC	g8			g9	g10			g11		g12		g13		g14		g15	g16		
Com 4			f1	f2		f3		f4		f5		f6		f7		f8			f9	f10			f11		f12		f13		f14		f15	f16		

Cont.-Nr.	35	36	37	38	39	40	41	42	43	44	45	46	47	48	49	50	51	52	53	54	55	56	57	58	59	60	61	62	63	64	65	66	67	68
Com 1			c16	c15	NC	NC	c14	NC	c13	NC	c12	NC	c11	NC	c10	NC	c9	NC	c8	NC	c7	NC	c6	NC	c5	NC	c4	NC	c3	NC	c2	c1		
Com 2			p16	p15			p14		p13		p12		p11		p10		p9		p8		p7		p6		p5		p4		p3		p2	p1		
Com 3	C III	C III	b16	b15			b14		b13		b12		b11		b10		b9		b8		b7		b6		b5		b4		b3		b2	b1		
Com 4			a16	a15			a14		a13		a12		a11		a10		a9		a8		a7		a6		a5		a4		a3		a2	a1	C IV	C IV

48. SCHEMATIC DRAWINGS

EC Section Numbers are explained as follows:
see type no for outline drawing number. ± to be counted as 1 digit.

EC Drawing Number Key

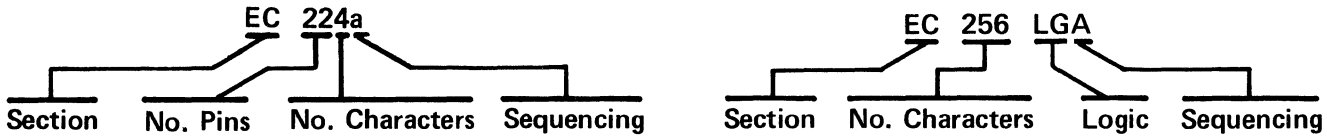

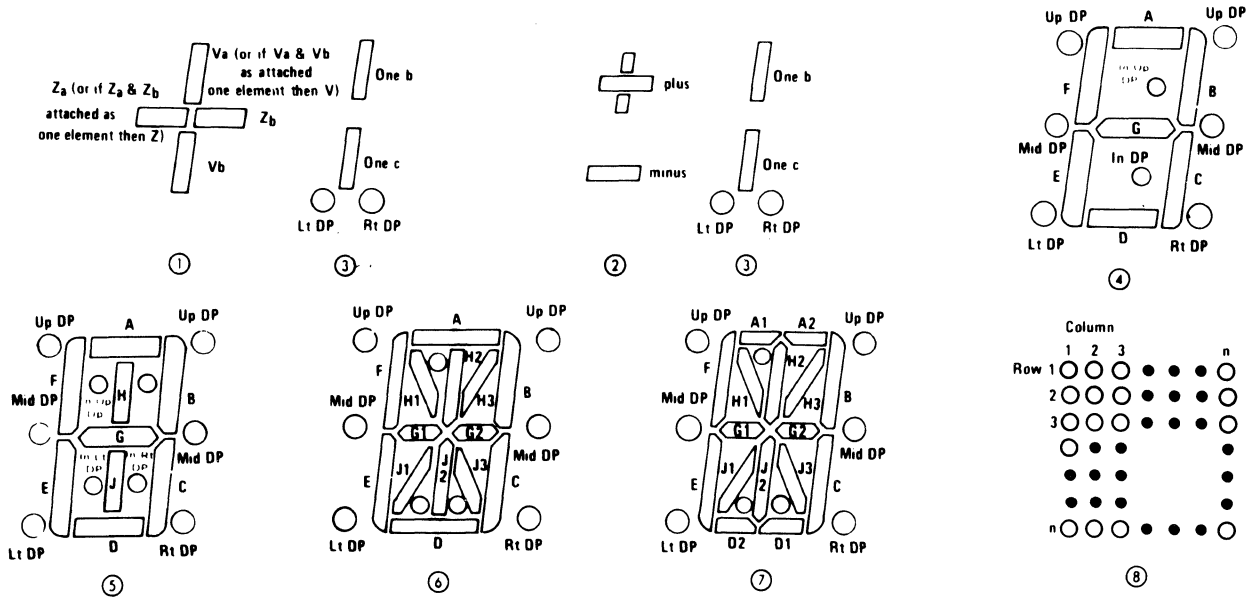

Glossary of Symbols & Abbreviations

A	- Anode	Con	- Connected	L Sen	- Light Sensor
Al	- Alarm	dec	- Decimal	LED	- Light Emitting Diode
An	- Anode	Dgr	- Degree	Lft	- Left
An Am In	- Anode AM Indicator	dig	- Digit	NC	- No Connection
An Al In	- Anode Alarm Indicator	Dig Com An	- Digit Common Anode	Opt	- Optional
An Cln	- Anode Colon	Dig Com Ka	- Digit Common Cathode	Out	- Output
An PM In	- Anode PM Indicator	DP	- Decimal Point	Rpl	- Ripple
BCD	- Binary Coded Decimal	ex	- Except	Rt	- Right
Blkng	- Blanking	ex dec	- Except Decimal	Seg	- Segment
Ca	- Cathode	Gnd	- Ground	Sel	- Select
Cln	- Colon	In	- Indicator, Input or Internal	Sen	- Sensor
Com	- Common	Int Con	- Internally Connected	V	- Volts
Com An	- Common Anode	KA	- Cathode	VCC	- Supply Voltage
Com Ka	- Common Cathode	KA PM In	- Cathode PM Indicator	WR	- Write
Com An Cln	- Common Anode Colon	KA AL In	- Cathode Alarm Indicator	( )	- Number of Digits
Com Ka Cln	- Common Cathode Colon	L	- Light	[ ]	- Mfrs. Lettering

48. SCHEMATIC DRAWINGS

EC8 | EC8a-b

Display

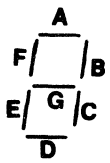

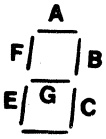

H
Decimal
Point

SEGMENT ASSIGNMENT

	1	2	3	4	5	6	7	8	9
EC8	NC	COM	E	D	C	G	A	B	F
EC8a	H	COM	E	D	C	G	A	B	F
EC8b	NC	COM	NC	NC	NC	D	B	C	A

EC214zy

Dot Matrix LCD Display

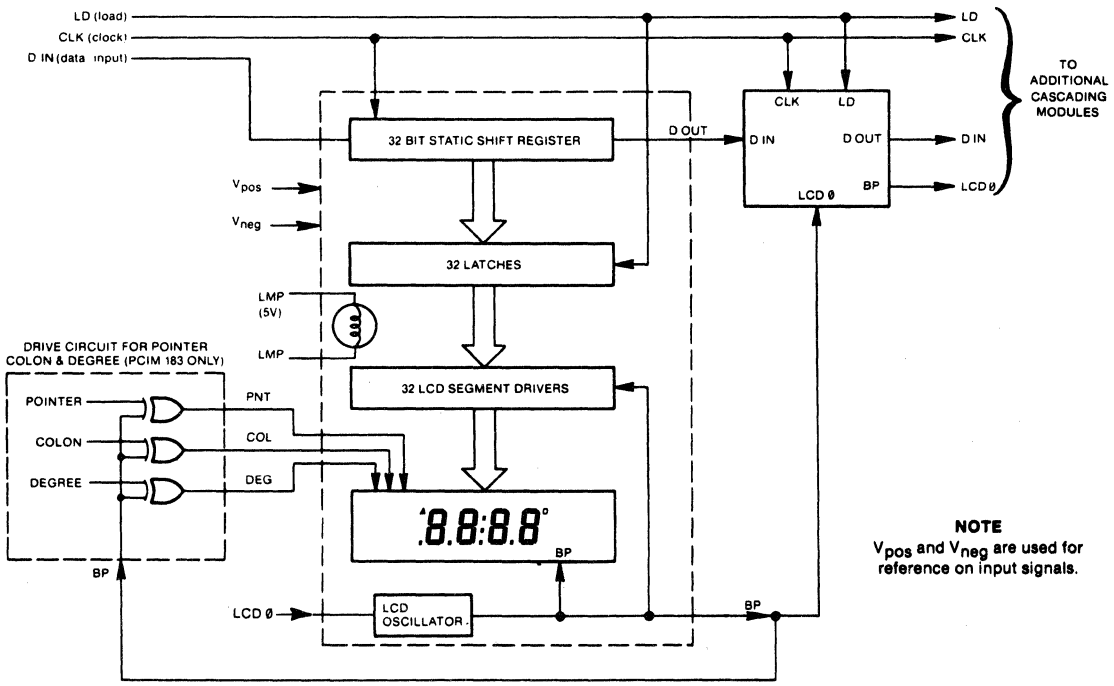

NOTE
V_{pos} and V_{neg} are used for reference on input signals.

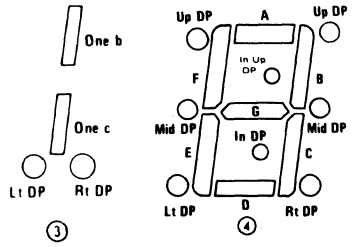

EC081

Pin	a ④	b ④	c ④	d ●
1	A	F	COM	An F
2	G	COM	F,G	Com KA
3	D	D	NC	An D
4	B	E	A	An E
5	COM	C	NC	An C
6	C	G	C,D	An G
7	F	A	E,F	An A
8	E	B	E,F	An B

EC091

Pin	a ●	b ●
1	A	DP
2	B1,B2	COM
3	C1,C2	E
4	DP	D
5	(-)	C
6	(+)	G
7	G	A
8	DP	B
9	An	F

EC102

Pin	a ③	b ●
1	A	Ch1 An
2	B	Phase 2 KA
3	C	Phase 1 KA
4	DECIMAL	Reset KA
5	E	Keep Alive An
6	F	Keep Alive KA
7	G	Phase 4 KA
8	DP	Phase 3 KA
9	An	Phase 5 KA
10	Keep Alive	Ch 2 An

EC154

Pin	a ④	b ④
1	Filament	Filament
2	F	G
3	dig 4	dig 5
4	G	F
5	E	E
6	dig 3	dig 3
7	D	dig 4
8	DP	M
9	dig 2	dig 2
10	C	COM
11	CLN	CLN
12	dig 1	dig 1
13	B	(PM)
14	A	(AM)
15	Filament	Filament

EC161

Pin	a ④	b ③
1	COM	Int. Con.
2	F	Int. Con.
3	COM	COM
4	G	B
5	NC	NC
6	E	A
7	D	A
8	NP	NO PIN
9	H	DP
10	COM	COM
11	C	D
12	NC	NC
13	COM	COM
14	COM	COM
15	A	NC
16	B	C

48. SCHEMATIC DRAWINGS

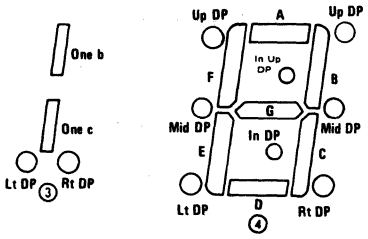

EC121

Pin	a ④
1	F
2	A
3	COM
4	G
5	D
6	E
7	C
8	COM
9	COM
10	COM
11	COM
12	B

EC122

Pin	a ●
1	Filament
2	D
3	G
4	F
5	dig 2
6	E
7	D
8	C
9	dig 1
10	B
11	A
12	Filament

EC141

Pin	a ④	b ③	c ④
1	COM	(+)	A
2	F	(+)	B
3	G	NC	C
4	COM	(+)	D
5	E	COM	E
6	D	COM	F
7	NP	NP	G
8	DP	COM	DP
9	COM	DP	An
10	C	IC	KA
11	COM	COM	A,P
12	COM	COM	(-)
13	B	1B	Cln Up
14	A	1B	CLn Lo

EC141

Pin	d ●	e ●	f ●	g ●	h ●	i ●
1	7	7	NC	An	Int. Con.	9
2	5	5	NC	0	An	8
3	8	8	NC	9	0	7
4	An	An	An	8	9	6
5	1	1	NC	7	8	5
6	4	4	(+)	6	7	An
7	2	2	(-)	5	6	4
8	6	6	NC	4	Int. Con.	3
9	9	9	NC	3	5	2
10	3	3	NC	2	4	1
11	Int Con.	DP	NC	1	3	0
12	NO PIN	NO PIN	NO PIN	Int. Con.	2	NC
13	0	0	Int. Con.	Int. Con.	1	NC
14	Int. Con.	Int. Con.	Int. Con.	Int. Con	NC	NC

48. SCHEMATIC DRAWINGS

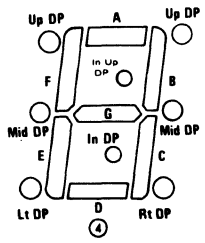

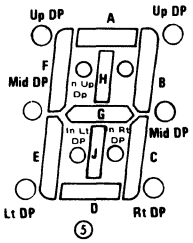

EC164

Pin	a ④	b ⑤	c ④	d ④	e ●
1	Filament	Filament	Filament	An 4	Filament
2	CLN	F	F	KA-A	G
3	F	G	E	KA-F	F
4	G	E	dig 4	Keep Alive An	Digit 4
5	Digit 5	D	CLN Lo	KA-B	E
6	E	dig 4	D	KA-G	D
7	Digit 4	dig 3	dig 3	An 3	Digit 3
8	Digit 3	GRID	GRID	Keep Alive KA	C
9	NC	dig 2	dig 2	KA-E	Gc
10	Digit 2	DP	C	KA-C	B
11	D	dig 1	G	KA-D	Digit 2
12	Digit 1	C	CLN Up	An 2	A
13	C	CLN	dig 1	KA-H	CLN Lo
14	B	B	B	CLN Lo	Digit 1
15	A	A	A	CLN Up	CLN Up
16	Filament(+)	Filament	Filament	An 1	Filament(+)

EC165

Pin	a ●	b ④
1	Filament	Filament(-)
2	G	G
3	F	F
4	Digit 5	dig 5
5	E	E
6	Digit 4	dig 4
7	D	D
8	POINTER	CLN
9	Digit 3	dig 3
10	DP	DP
11	C	C
12	Digit 2	dig 2
13	B	B
14	Digit 1	dig 1
15	A	A
16	Filament	Filament(+)

EC172

Pin	a ⑤
1	A
2	B
3	C
4	D
5	E
6	F
7	G1
8	H1
9	H2
10	H3
11	G2
12	J3
13	J2
14	J1
15	DP
16	An
17	NC

EC174

Pin	a ⑤	b ④
1	Filament	NC
2	comma	An-4
3	DP	A
4	F	F
5	G	An 3
6	dig 4	B
7	E	G
8	D	E
9	C	C
10	dig 3	D
11	dig. com	NC
12	dig 2	An 2
13	CLN,H,J	CLN Lo
14	B	CLN Up
15	dig 1	An 1
16	A	Keep Alive
17	Filament	An Keep Alive

48. SCHEMATIC DRAWINGS

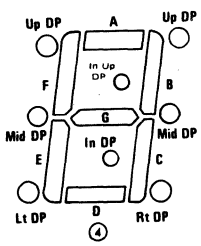

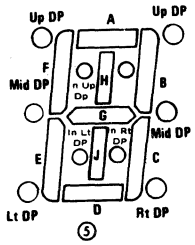

EC188

Pin	a ④	b ⑤
1	Filament	Filament
2	F	D
3	G	dig 8
4	Digit 8	E
5	E	dig 7
6	Digit 7	G
7	D	dig 6
8	Digit 6	F
9	Digit 5	dig 5
10	Digit 4	dig 4
11	Digit 3	A
12	DP	dig 3
13	Digit 2	B
14	C	dig 2
15	Digit 1	C
16	B	dig 1
17	A	DP
18	Filament	F

EC198

Pin	a ④	b ④	c ④
1	Filament	Filament	Filament
2	D	dig 9	F
3	Digit 8	F	G
4	E	dig 8	E
5	Digit 7	G	DP
6	G	dig 7	NC
7	Digit 6	E	dig 8
8	F	dig 6	dig 7
9	Digit 5	D	dig 6
10	Digit 4	dig 5	dig 5
11	A	D.P.	dig 4
12	Digit 3	dig 4	dig 3
13	B	C	dig 2
14	Digit 2	dig 3	dig 1
15	C	B	D
16	Digit 1	dig 2	C
17	DP	A	B
18	Filament	dig 1	A
19		Filament	Filament

EC199

Pin	a ④	b ④	c ④
1	A	A	Filament
2	An1	An1	dig 9
3	B	B	F
4	An2	An2	dig 8
5	G1,G2	C	G
6	An3	An3	dig 7
7	C	(-)	E
8	An4	An4	dig 6
9	DP	DP	D
10	An5	An5	dig 5
11	NC	NC	DP
12	An6	An6	dig 4
13	D	D	C
14	An7	An7	dig 3
15	E	E	B
16	An8	An8	dig 2
17	G3-G9	G	A
18	An9	An9	dig 1
19	F	F	Filament

48. SCHEMATIC DRAWINGS

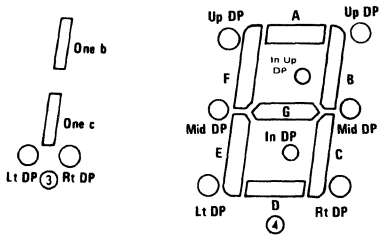

EC201

Pin	④ a
1	DP1
2	NC
3	NC
4	NC
5	NC
6	NC
7	NC
8	NC
9	NC
10	DP2
11	An 1
12	C
13	B
14	A
15	F
16	G
17	E
18	D
19	Keep Alive
20	Keep Alive An

EC204

Pin	④ a
1	Filament
2	dig 5
3	AM
4	dig 4
5	PM
6	CLN Up
7	B
8	dig 3
9	C
10	CLN Lo
11	GRID
12	DP
13	dig 2
14	D
15	E
16	G
17	dig 1
18	F
19	A
20	Filament

EC206

Pin	a ●	④ b
1	Filament	Filament
2	dig 6	NC
3	F	dig 6
4	G	G
5	E	F
6	D	dig 5
7	dig 5	E
8	COMMA	D
9	POINTER	dig 4
10	dig 4	BAR
11	dig 3	(½)
12	D.P.	dig 3
13	C	Comma
14	dig 2	DP
15	½	dig 2
16	G (½)	C
17	B	B
18	A	dig 1
19	dig 1	A
20	Filament	Filament

EC209

Pin	④ a
1	Filament
2	Apostrophe
3	A
4	B
5	G
6	F
7	C
8	E
9	D
10	DP
11	dig 9
12	dig 8
13	dig 7
14	dig 6
15	dig 5
16	dig 4
17	dig 3
18	dig 2
19	dig 1
20	Filament

EC211

Pin	④ a
1a	A
1b	A
2a	B
2b	B
3a	C
3b	C
4a	D
4b	D
5a	E
5b	E
6a	F
6b	F
7a	G
7b	G
8	DP/COMMA
9a	An
9b	An
10	KA
13	CLN
14	CLN
15	COMMA

EC219

Pin	④ a	④ b
1	Filament	Filament
2	Filament	dig 9
3	dig 9	Comma
4	G	F
5	dig 8	G
6	F	dig 8
7	E	E
8	dig 7	D
9	D	dig 7
10	dig 6	dig 6
11	dig 5	dig 5
12	dig 4	dig 4
13	(½)	dig 3
14	DP	DP
15	dig 3	(½)
16	C	dig 2
17	B	C
18	dig 2	B
19	A	A
20	dig 1	dig 1
21	Filament	Filament

EC231

Pin	a ●
1a	(+)
1b	NC
2a	1B
2b	1B
3a	1C
3b	1C
4a	NC
4b	NC
5a	NC
5b	NC
6a	NC
6b	NC
7a	(+)
7b	NC
8	DP/COMMA
9a	An
9b	An
10	KA
11	(+)
12	(-)
13	NC
14	NC
15	NC

48. SCHEMATIC DRAWINGS

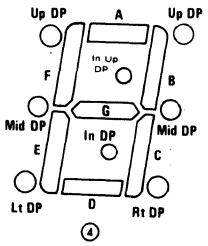

EC2212

Pin ④	a	b
1	Filament	Filament
2	F	12G
3	dig 12	11G
4	G	P (f)
5	dig 11	10G
6	E	P (g)
7	dig 10	9G
8	dig 9	P(e)
9	D	8G
10	dig 8	P(d)
11	dig 7	7G
12	dig 6	6G
13	dig 5	P(DP)
14	DP	5G
15	dig 4	P(c)
16	dig 3	4G
17	C	P(d)
18	dig 2	3G
19	B	P(a)
20	dig 1	2G
21	A	1G
22	Filament	Filament

EC2210

Pin	④ a	④ b	c ●
1	Filament	Filament	Filament
2	M	Filament	Filament
3	(A)	dig 10	dig 10
4	E	G	G
5	D	dig 9	dig 9
6	dig 11	F	F
7	dig 10	E	E
8	dig 9	dig 8	dig 8
9	dig 8	D	D
10	dig 7	dig 7	dig 7
11	dig 6	dig 6	dig 6
12	dig 5	dig 5	dig 5
13	dig 4	(½)	(½)
14	dig 3	DP	DP
15	dig 2	dig 4	dig 4
16	dig 1	C	C
17	COMMA	B	B
18	DP	dig 3	dig 3
19	C	A	A
20	B	dig 2	dig 2
21	A	dig 1	dig 1
22	Filament	Filament	Filament

EC2211

Pin	● a
1	Filament
2	F
3	G
4	E
5	D
6	dig 11
7	dig 10
8	dig 9
9	dig 8
10	dig 7
11	dig 6
12	dig 5
13	dig 4
14	dig 3
15	dig 2
16	dig 1
17	COMMA
18	DP
19	C
20	B
21	A
22	Filament

EC2310

Pin	a ●
1	Filament
2	F
3	G1
4	E
5	C
6	D
7	POINTER
8	dig 9
9	dig 8
10	dig 7
11	dig 6
12	dig 5
13	dig 4
14	dig 3
15	dig 2
16	dig 1
17	COMMA
18	DP
19	(½)
20	G2
21	B
22	A
23	Filament

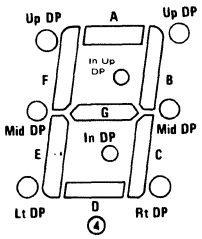

EC2413

Pin	a ●
1	Filament
2	dig 13
3	COMMA
4	dig 12
5	F
6	dig 11
7	G
8	dig 10
9	E
10	dig 9
11	D
12	dig 8
13	dig 7
14	dig 6
15	DP
16	dig 5
17	C
18	dig 4
19	B
20	dig 3
21	A
22	dig 2
23	dig 1
24	Filament

48. SCHEMATIC DRAWINGS

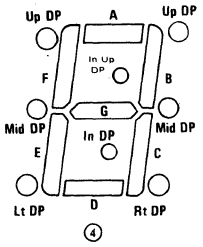

EC254

Pin	a ④
1	Filament
2	NO PIN
3	dig 6
4	MEMORY
5	FM,DP,MHZ
6	NO PIN
7	AM, KHZ
8	NO PIN
9	B
10	dig 5
11	1B, 1C
12	C
13	NO PIN
14	dig 4
15	dig 3
16	NO PIN
17	dig 2
18	D
19	E
20	G
21	dig 1
22	F
23	A
24	NO PIN
25	Filament

EC259

Pin	a
1	A
2	An1
3	B
4	An2
5	C
6	NC
7	NC
8	An3
9	DP
10	An4
11	COMMA
12	An5
13	NC
14	NC
15	NC
16	An6
17	NC
18	An7
19	D
20	An8
21	E
22	NC
23	G
24	An9
25	F

EC2511

Pin	a ④	b ●
1	A	Filament
2	An1	(M)
3	B	(-)
4	An2	(←)
5	C	F
6	An3	E
7	NC	D
8	An4	dig 11
9	DP	dig 10
10	An5	dig 9
11	COMMA	dig 8
12	An5	dig 7
13	NC	dig 6
14	NC	dig 5
15	NC	dig 4
16	An6	dig 3
17	NC	dig 2
18	An7	dig 1
19	D	COMMA
20	An8	D.P.
21	E	C
22	NC	G
23	G	B
24	An9	A
25	F	Filament

EC2512

Pin	a ④
1	A
2	An1
3	KA
4	NC
5	MEMORY
6	An2
7	(-)
8	An4
9	DP
10	An5
11	COMMA
12	An6
13	NC
14	An7
15	NC
16	An8
17	NC
18	An9
19	D
20	An10
21	E
22	An11
23	G
24	An12
25	F

EC2510

Pin	a ●	b ●
1	Filament	Filament
2	GRID B	Apostrophe
3	dig 10	F
4	AP	G
5	F	E
6	G	C
7	dig 9	D
8	E	POINTER
9	D	dig 10
10	(X)	dig 9
11	dig 8	dig 8
12	dig 7	dig 7
13	dig 6	dig 6
14	dig 5	dig 5
15	dig 4	dig 4
16	dig 3	dig 3
17	COMMA	dig 2
18	DP	dig 1
19	C	COMMA
20	dig 2	DP
21	CLN	(½)
22	B	G (½)
23	A	B
24	dig 1	A
25	Filament	Filament

48. SCHEMATIC DRAWINGS

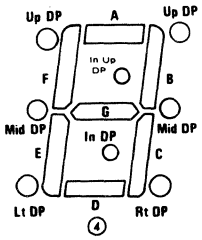

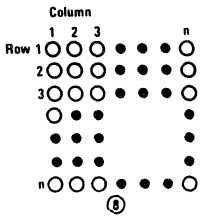

EC268

Pin	a ●
1	GND
2	GND
3	GND
4	GND
5	GND
6	GND
7	GND
8	GND
9	GND
10	GND
11	GND
12	GND
13	GND
14	D0
15	D1
16	D2
17	D3
18	D4
19	D5
20	D6
21	D7
22	TO
23	RST
24	CS
25	RD
26	WR

EC2612

Pin	a ④
1	Filament
2	F
3	G
4	E
5	D
6	COMMA
7	NC
8	dig 12
9	11
10	dig 10
11	dig 9
12	dig 8
13	dig 7
14	dig 6
15	dig 5
16	dig 4
17	dig 3
18	dig 2
19	dig 1
20	POINTER
21	DP
22	C
23	½
24	B
25	A
26	Filament

EC2611

Pin	a ④
1	Filament
2	Apost.
3	F
4	G
5	E
6	D
7	dig 11
8	dig 10
9	dig 9
10	dig 8
11	dig 7
12	dig 6
13	dig 5
14	dig 4
15	dig 3
16	dig 2
17	dig 1
18	POINTER
19	COMMA
20	DP
21	C
22	½
23	G (½)
24	B
25	A
26	Filament

EC265

Pin	a ④
1	Filament
2	(FM),(MHz)
3	(AM),(kHz)
4	dig 8
5	B7
6	C7
7	dig 7
8	A
9	B
10	dig 6
11	C
12	D
13	dig 5
14	DP
15	dig 4
16	E
17	dig 3
18	G
19	dig 2
20	F
21	A2,C2,D2,F2
22	dig 1
23	G2
24	B2,E2
25	(MEMORY)
26	Filament

Continued on next page

48. SCHEMATIC DRAWINGS

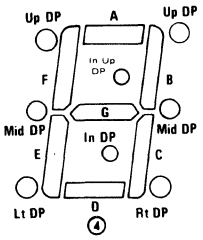

EC265

Pin	b ④
1	Filament
2	(FM),(MHz)
3	(MW)
4	dig 8
5	(LW)
6	(kHz)
7	dig 7
8	A
9	B
10	dig 6
11	C
12	D
13	dig 5
14	DP
15	dig 4
16	E
17	dig 3
18	G
19	dig 2
20	F
21	A2,D2,C2,F2
22	dig 1
23	G2
24	B2,E2
25	(MEMORY)
26	Filament

EC2610

Pin	a ④	b ④	c ④	d ●
1	Filament	Filament	Filament	Filament
2	(M)	(M)	G	dig 10
3	(-)	(-)	F	NC
4	(←)	(←)	dig 11	Apostrophe
5	dig 11	dig 11	E	dig 9
6	Apostrophe	Apostrophe	dig 10	F
7	F	F	D	G
8	G	G	dig 9	dig 8
9	E	E	Comma 2	E
10	D	dig 10	dig 8	dig 7
11	dig 10	dig 9	DP	D
12	dig 9	dig 8	dig 7	POINTER
13	dig 8	dig 7	C	dig 6
14	dig 7	dig 6	dig 6	dig 5
15	dig 6	dig 5	B	comma
16	dig 5	dig 4	dig 5	DP
17	dig 4	dig 3	A	dig 4
18	dig 3	dig 2	dig 4	C
19	dig 2	dig 1	Comma	dig 3
20	dig 1	Comma	dig 3	(½)
21	Comma	D	dig 2	G(½)
22	DP	DP	(E)	dig 2
23	C	C	dig 1	B
24	B	B	(-)	A
25	A	A	(M)	dig 1
26	Filament	Filament	Filament	Filament

48. SCHEMATIC DRAWINGS

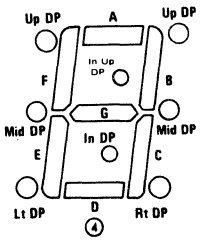

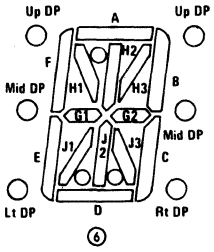

EC279

Pin	a ④	b ⑥
1	A	Filament
2	An1	F
3	B	G1
4	NC	dig 10
5	C	E
6	An2	dig 9
7	DP	J1
8	An3	J2
9	COMMA	dig 8
10	NC	J3
11	NC	dig 7
12	An4	D
13	NC	dig 6
14	An5	DP
15	NC	dig 5
16	NC	C
17	NC	dig 4
18	An6	G2
19	NC	dig 3
20	An7	H1
21	D	H2
22	NC	dig 2
23	E	H3
24	An8	dig 1
25	G	B
26	An9	A
27	F	Filament

EC2810

Pin	a	b
1	Filament	Filament
2	D	F
3	J2	G1
4	J3	E
5	J1	J1
6	C	J3
7	H1	J2
8	H3	DP
9	H2	D
10	POINTER	dig 10
11	A	dig 9
12	B	dig 8
13	F	dig 7
14	G1	dig 6
15	G2	dig 5
16	E	dig 4
17	NC	dig 3
18	Filament	dig 2
19	dig 10	dig 1
20	dig 9	C
21	dig 8	G2
22	dig 7	B
23	dig 6	H1
24	dig 5	H3
25	dig 4	H2
26	dig 3	Apostrophe
27	dig 2	A
28	dig 1	Filament

48. SCHEMATIC DRAWINGS

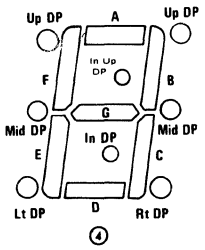

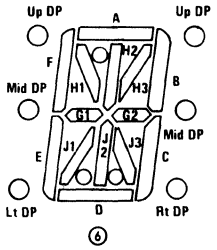

EC285

Pin	a ④
1	Filament
2	NO PIN
3	F
4	dig 6
5	NO PIN
6	G
7	dig 5
8	NO PIN
9	E
10	NO PIN
11	D
12	dig 4
13	NO PIN
14	dig 3
15	NO PIN
16	Comma
17	NO PIN
18	dig 2
19	NO PIN
20	DP
21	NO PIN
22	C
23	dig 1
24	NO PIN
25	B
26	A
27	NO PIN
28	Filament

EC2848

Pin	a ⑥
1	Filament
2	NC
3	dig 9
4	NC
5	NC
6	dig 8
7	G
8	F
9	dig 7
10	E
11	D
12	dig 6
13	NC
14	NC
15	dig 5
16	NO PIN
17	NO PIN
18	dig 4
19	DP
20	dig 3
21	C
22	B
23	dig 2
24	A
25	NC
26	dig 1
27	NO PIN
28	Filament

EC2812

Pin	a ④	b ●	c ●
1	Filament	Filament	Filament
2	(M)	(I)	(M)
3	(–)	(II)	(–)
4	(←—)	Apostrophe	Apostrophe
5	dig 13	(E)	(←—)
6	Apostrophe	dig 13	dig 13
7	F	F	F
8	G	G	G
9	E	E	E
10	D	dig 12	dig 12
11	dig 12	dig 11	dig 11
12	dig 11	dig 10	dig 10
13	dig 10	dig 9	dig 9
14	dig 9	dig 8	dig 8
15	dig 8	dig 7	dig 7
16	dig 7	dig 6	dig 6
17	dig 6	dig 5	dig 5
18	dig 5	dig 4	dig 4
19	dig 4	dig 3	dig 3
20	dig 3	dig 2	dig 2
21	dig 2	dig 1	dig 1
22	dig 1	Comma	Comma
23	COMMA	D	D
24	DP	DP	DP
25	C	C	C
26	B	B	B
27	A	A	A
28	Filament	Filament	Filament

48. SCHEMATIC DRAWINGS

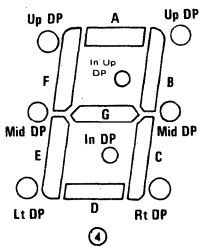

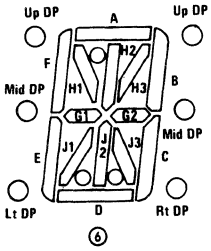

EC302

Pin	④ a
1	Keep Alive
2	Keep Alive An
3	DP1
4	NC
5	NC
6	A1
7	NC
8	NC
9	DP2
10	NC
11	NC
12	A2
13	NC
14	NC
15	DP3
16	NC
17	C1
18	B1
19	A1
20	F1
21	G1
22	E1
23	D1
24	C2
25	B2
26	A2
27	F2
28	G2
29	E2
30	D2

EC3011

Pin	④ a
1	Filament
2	Pointer Up Lt
3	Pointer mid Lt
4	Pointer Lo Lt
5	F
6	dig 13
7	G
8	E
9	comma
10	dig 12
11	dig 11
12	dig 10
13	dig 9
14	dig 8
15	D
16	DP
17	dig 7
18	dig 6
19	dig 5
20	dig 4
21	dig 3
22	dig 2
23	dig 1
24	C
25	B
26	A
27	Pointer Lo Rt
28	Pointer mid Rt
29	(½) Pointer Up Rt
30	Filament

EC3012

Pin	⑥ a	④ b	④ c
1	Filament	Filament	Filament
2	H3	(M)	NC
3	H2	(II)	(II)
4	H1,1(½)	(I)	(I)
5	J1,2(½)	(–)	dig 13
6	J3	(←)	(–)
7	J2	Apostrophe	dig 12
8	C	F	E
9	D	E	dig 11
10	dig 12	dig 13	F
11	dig 11	dig 12	dig 10
12	dig 10	dig 11	dig 9
13	dig 9	dig 10	E
14	dig 8	dig 9	dig 8
15	dig 7	dig 8	D
16	dig 6	dig 7	comma 2
17	dig 5	dig 6	dig 7
18	dig 4	dig 5	DP
19	dig 3	dig 4	dig 6
20	dig 2	dig 3	C
21	dig 1	dig 2	dig 5
22	COMMA	dig 1	dig 4
23	DP	comma	G
24	E	D	dig 3
25	G2	DP	B
26	G1	C	dig 2
27	F	G	A
28	B	B	dig 1
29	A	A	comma 1
30	Filament	Filament	Filament

48. SCHEMATIC DRAWINGS

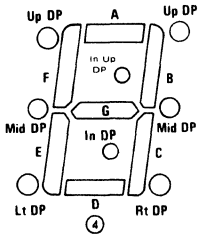

EC3214

Pin	4 a
1	Filament
2	(M)
3	(I)
4	(II)
5	(-)
6	(←)
7	dig 15
8	Apostrophe
9	F
10	G
11	E
12	D
13	dig 14
14	dig 13
15	dig 12
16	dig 11
17	dig 10
18	dig 9
19	dig 8
20	dig 7
21	dig 6
22	dig 5
23	dig 4
24	dig 3
25	dig 2
26	dig 1
27	comma
28	DP
29	C
30	B
31	A
32	Filament

EC3316

Pin	a 4
1	A
2	An1
3	B
4	An2
5	C
6	An3
7	DP Up
8	An4
9	DP
10	An5
11	COMMA
12	An6
13	NC
14	An7
15	NC
16	An8
17	NC
18	An9
19	NC
20	An10
21	NC
22	An11
23	NC
24	An12
25	NC
26	An13
27	D
28	An14
29	E
30	An15
31	G
32	An16
33	F

48. SCHEMATIC DRAWINGS

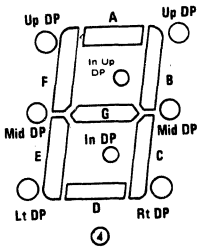

EC334

Pin	④ a	④ b	④ c	④ d
1	Filament	Filament	Filament	Filament
2	CLN Up	CLN Up	CLN Up	G5
3	CLN Lo	CLN Lo	CLN Lo	B5,C5
4	G-4	(PM)	(PM)	A4
5	GRID	GRID	GRID	GRID
6	F-4	(AM)	BELL	F4
7	E4	NC	DP	E4
8	A-4,D-4	NC	DP Mid.	D4
9	B-4	(AM)	(AM)	C4
10	C-4	B-4,C-4	B4,E4	G4
11	F-3	F-3	F3	B4
12	G-3	G-3	G3	A3
13	A-3	A-3	A3	F3
14	B-3	B-3	B3	E3
15	D-3	D-3	D3	D3
16	C-3	C-3	C3	C3
17	E-3	E-3	E3	G3
18	GRID	GRID	GRID	GRID
19	F-2	F-2	F2	B3
20	G-2	G-2	G2	A2
21	A-2,D-2	A-2,D-2	A2,D2	F2
22	B-2	B-2	B2	E2
23	E-2	E-2	E2	D2
24	C-2	C-2	C2	C2
25	F-1	F-1	F1	G2
26	G-1	G-1	G1	B2
27	A-1	A-1	A1	B1,E1
28	B-1	B-1	B1	G1
29	E-1	E-1	E1	(CH)
30	GRID	GRID	GRID	NO PIN
31	C-1	C-1	E1	(A)
32	D-1	D-1	D1	(kHz)
33	Filament	Filament	Filament	Filament

EC3313

Pin	④ a
1	Filament
2	digit 13
3	(REG)
4	(X)
5	(Z)
6	dig 12
7	F
8	G
9	E
10	dig 11
11	D
12	POINTER
13	DP
14	dig 10
15	dig 9
16	dig 8
17	dig 7
18	dig 6
19	dig 5
20	dig 4
21	C
22	½
23	B
24	A
25	dig 3
26	COMMA
27	ARROW 4
28	ARROW 3
29	dig 2
30	ARROW 2
31	ARROW 1
32	dig 1
33	Filament

EC337

Pin	④ a
1	Filament
2	NO PIN
3	Apostrophe
4	F
5	G
6	dig 7
7	NO PIN
8	E
9	D
10	dig 6
11	NO PIN
12	POINTER
13	NO PIN
14	dig 5
15	NO PIN
16	NO PIN
17	NO PIN
18	dig 4
19	NO PIN
20	COMMA
21	DP
22	dig 3
23	NO PIN
24	C
25	(½)
26	dig 2
27	NO PIN
28	G (½)
29	B
30	dig 1
31	A
32	NO PIN
33	Filament

48. SCHEMATIC DRAWINGS

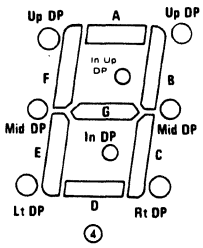

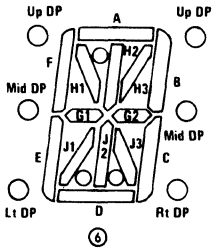

EC338

Pin	④ a
1	Filament
2	NO PIN
3	G
4	dig 8
5	NO PIN
6	F
7	E
8	NO PIN
9	dig 7
10	NO PIN
11	D
12	NO PIN
13	dig 6
14	POINTER
15	Comma
16	dig 5
17	NO PIN
18	NO PIN
19	dig 4
20	DP
21	C
22	NO PIN
23	dig 3
24	NO PIN
25	(½)
26	NO PIN
27	dig 2
28	B
29	NO PIN
30	dig 1
31	A
32	NO PIN
33	Filament

EC344

Pin	a ●	b ●	c ●
1	Filament	Filament	Filament
2	NC	A4	DP
3	DP	F4	(*)
4	CLN	G4	CLN
5	(ALARM)	E4	GRID
6	NO PIN	D4	G4
7	(PM)	C4	F4
8	(AM)	B4	A4,D4,E4
9	A4,D4,E4,G4	A3	B4
10	C4	F3	C4
11	B4	G3	F3
12	F3	E3	G3
13	G3	D3	A3
14	A3	C3	B3
15	B3	B3	D3
16	D3	CLN	C3
17	C3	A2	GRID
18	GRID	F2	E3
19	E3	G2	F2
20	F2	E2	G2
21	G2	D2	D2
22	A2,D2	C2	A2
23	B2	B2	B2
24	E2	A1	E2
25	C2	F1	C2
26	F1	G1	F1
27	G1	E1	G1
28	A1	D1	A1
29	B1	C1	NO PIN
30	GRID	B1	B1
31	C1	GRID	E1
32	D1	GRID	C1
33	E1	NO PIN	D1
34	Filament	Filament	Filament

EC3416

Pin	⑥ a
1	Filament
2	H3
3	H2
4	H1
5	J1
6	J3
7	J2
8	C
9	D
10	dig 16
11	dig 15
12	dig 14
13	dig 13
14	dig 12
15	dig 11
16	dig 10
17	dig 9
18	dig 8
19	dig 7
20	dig 6
21	dig 5
22	dig 4
23	dig 3
24	dig 2
25	dig 1
26	COMMA
27	DP
28	E
29	G2
30	G1
31	F
32	B
33	A
34	Filament

EC3418

Pin	a ●
1	Filament
2	DP
3	(♦)
4	CLN
5	GRID
6	(PM)
7	(AM)
8	NC
9	(AM)
10	ONE B,C
11	F3
12	G3
13	A3
14	B3
15	C3
16	D3
17	GRID
18	E3
19	F2
20	G2
21	D2
22	A2
23	B2
24	E2
25	C2
26	F1
27	G1
28	A1
29	NO PIN
30	B1
31	E1
32	C1
33	D1
34	Filament

48. SCHEMATIC DRAWINGS

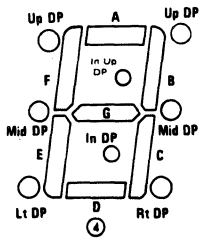

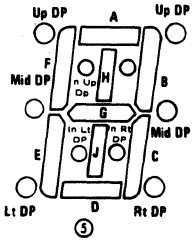

EC354

Pin	④ a	④ b
1	Filament	Filament
2	(AM)	ONE
3	(PM)	A4
4	A,D	F4
5	F	E4
6	G	D4
7	E	C4
8	Int. Con.	NO PIN
9	C	G4
10	B	B4
11	A	A3
12	F	F3
13	G	E3
14	E	D3
15	D	C3
16	C	G3
17	B-3	B3
18	CLN	A2
19	Int. Con.	NO PIN
20	F-3	F2
21	G-3	E2
22	E-3	D2
23	A-3,D-3	C2
24	C-3	G2
25	G-3	B2
26	A-4	B1,E1
27	F-4	G1
28	G-4	(kHz)
29	E-4	(MHz)
30	D-4	FM,DP,A1,C1,D1,F1
31	C-4	(MW)
32	B-4	(LW)
33	GRID	GRID
34	GRID	GRID
35	Filament	Filament

EC355

Pin	④ a	④ b
1	Filament	Filament
2	A9	B5,C5
3	F9	A4
4	PM	F4
5	dig 10	E4
6	PM	D4
7	FM,DP,MHz	C4
8	dig 9	Int. Con.
9	G9	G4
10	E9	B4
11	D9	A3
12	C9,C	F3
13	dig 8	E3
14	E	D3
15	dig 7	C3
16	D	G3
17	dig 6	B3
18	CLN	A2
19	NC	Int. Con.
20	dig 5	F2
21	NC	E2
22	dig 4	D2
23	NC	C2
24	dig 3	G2
25	G	B2
26	dig 2	B1,E1
27	DP2,kHz	G1
28	G2	(kHz)
29	B2,E2	(MHz)
30	dig 1	(FM),DP
31	A2,F2,C2,D2	(AM)
32	F	A1,D1,C1,F1
33	B9,B	GRID
34	A	GRID
35	Filament	Filament

EC356

Pin	⑤ a
1	Filament
2	dig 6
3	H
4	G
5	dig 6
6	NO PIN
7	dig 5
8	F
9	E
10	dig 5
11	NO PIN
12	dig 4
13	NC
14	NC
15	dig 4
16	NO PIN
17	(+)
18	(+)
19	NO PIN
20	dig 3
21	NC
22	NC
23	dig 3
24	NO PIN
25	dig 2
26	D
27	C
28	dig 2
29	NO PIN
30	dig 1
31	B
32	A
33	dig 1
34	NC
35	Filament

48. SCHEMATIC DRAWINGS

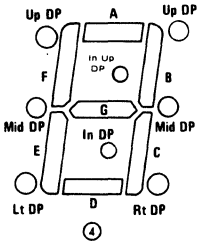

EC364

Pin	a	b ●	c ●	④ d	④ e
1	Filament	Filament	Filament (-)	Filament (-)	Filament
2	GRID	GRID	GRID	GRID	B5,C5
3	E4	A4,D4,E4,G4	A4,D4,E4,G4	NC	A4
4	D4,A4	NC	C4	PM	F4
5	E4	CLN	E3	G3	E4
6	E3	D1	D3	E3	D4
7	D3	C1	C3	C3	C4
8	D3	GRID	GRID	D3	GRID
9	C3	E1	CLN	G2	G4
10	G2	B1	E2	E2	B4
11	Filament	A1	D2	C2	A3
12	C2	G1	C2	G1	F3
13	E1	NO PIN	DP	E1	E3
14	E1	F1	E1	D1	D3
15	D1	C2	D1	C1	C3
16	C1	E2	C1	DP	G3
17	GRID	Filament (-)	GRID	GRID	B3
18	Filament (+)	GRID	Filament (+)	Filament (+)	A2
19	NO PIN	NO PIN	NO PIN	NO PIN	GRID
20	GRID	NO PIN	NO PIN	GRID	F2
21	B1	B2	B1	B1	E2
22	A1	A2,D2	A1	A1	D2
23	F1	G2	F1	F1	C2
24	B2	F2	G1	B2	G2
25	A2,D2	E3	B2	A2,B2	B2
26	F2	C3	A2	F2	B1,E1
27	CLN	D3	F2	CLN	G1
28	GRID	GRID	GRID	GRID	(FM)
29	B3	B3	G2	B3	(AM) (kHZ)
30	B3	A3	B3	A3	(+)
31	F3	G3	A3	F3	(MHz) DP
32	B4	F3	F3	B4,C4	A1,C1,D1,F1
33	F4	C4	G3	NC	(CH)
34	G4	B4	B4	AM	GRID
35	Vcc	NO PIN	NO PIN	GRID	Filament
36	NO PIN	NO PIN	NO PIN	NO PIN	Filament

EC365

Pin	④ a	④ b	④ c
1	Filament	Filament	Filament
2	(AM)	(MEMORY)	(STEREO)
3	(LW)	ONE B,C	ONE B,C
4	NO PIN	GRID	GRID
5	dig 7	A4	G4
6	G	F4	F4
7	F	E4	E4
8	E	D4	D4
9	dig 6	C4	C4
10	D	G4	B4
11	C	B4	A4
12	B	A3	G3
13	dig 5	F3	F3
14	A,(FM),(MHz)	E3	E3
15	NO PIN	D3	D3
16	NO PIN	C3	C3
17	NO PIN	G3	B3
18	dig 4	B3	A3
19	NO PIN	A2	G2
20	NO PIN	GRID	GRID
21	NO PIN	F2	F2
22	dig 3	E2	E2
23	NO PIN	D2	D2
24	NO PIN	C2	C2
25	DP	G2	B2
26	dig 2	B2	A2
27	CLN	B1,E1	B1,E1
28	NO PIN	G1	G1
29	dig 1	(FM)	A1,D1,C1,F1
30	NO PIN	(MHz), DP	(FM),(MHz),DP
31	NO PIN	(kHz)	(AM),(kHz)
32	dig 1	(AM)	(MEMO)
33	NO PIN	A1,D1,C1,F1	NC
34	(kHz)	(dB)	NC
35	(MEMORY)	GRID	GRID
36	Filament	Filament	Filament

48. SCHEMATIC DRAWINGS

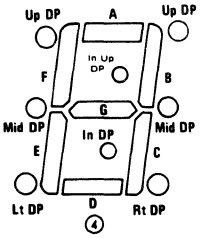

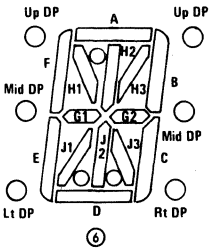

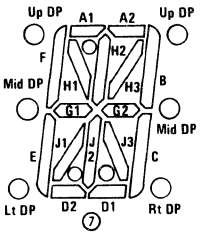

EC376

Pin	④ a
1	Filament
2	NO PIN
3	(AM)
4	(SUN)
5	dig 7
6	(MON)
7	(TUE)
8	(WED)
9	(PM)
10	dig 7
11	G
12	F
13	E
14	dig 6
15	CLN
16	NO PIN
17	dig 5
18	NO PIN
19	NO PIN
20	NO PIN
21	dig 4
22	NO PIN
23	NO PIN
24	NO PIN
25	D
26	dig 3
27	C
28	B
29	A
30	dig 2
31	(THU)
32	(FRI)
33	dig 1
34	(SAT)
35	Pointer, Circle
36	(Alarm)
37	Filament

EC3716

Pin	⑦ a
1	Filament
2	H1
3	dig 16
4	Apostrophe
5	dig 15
6	J1
7	dig 14
8	J3
9	dig 13
10	H3
11	dig 12
12	J2
13	H2
14	dig 11
15	G2
16	dig 10
17	G1
18	dig 9
19	DP
20	dig 8
21	comma
22	dig 7
23	F
24	dig 6
25	E
26	D2
27	dig 5
28	D1
29	dig 4
30	C
31	dig 3
32	B
33	dig 2
34	A2
35	dig 1
36	A1
37	Filament

EC3820

Pin	⑥ a
1	Filament
2	F
3	G1
4	E
5	J1
6	J3
7	J2
8	DP
9	D
10	dig 20
11	dig 19
12	dig 18
13	dig 17
14	dig 16
15	dig 15
16	dig 14
17	dig 13
18	dig 12
19	dig 11
20	dig 10
21	dig 9
22	dig 8
23	dig 7
24	dig 6
25	dig 5
26	dig 4
27	dig 3
28	dig 2
29	dig 1
30	C
31	G2
32	B
33	H1
34	H3
35	H2
36	Apostrophe
37	A
38	Filament

EC384

Pin	④ a
1	Filament
2	GRID
3	E4
4	D4
5	C4
6	G3
7	E3
8	D3
9	C3
10	G2
11	E2
12	D2
13	C2
14	G1
15	E1
16	D1
17	C1
18	GRID
19	Filament
20	NO PIN
21	NO PIN
22	B1
23	A1
24	F1
25	B2
26	A2
27	F2
28	CLN
29	GRID
30	B3
31	A3
32	F3
33	B4
34	A4
35	F4
36	G4
37	NO PIN
38	NO PIN

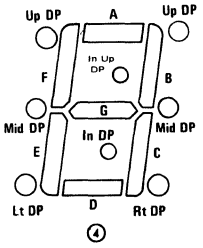

EC396

Pin	a ●
1	A
2	An1
3	B
4	An1
5	C
6	Keep Alive An
7	Keep Alive KA
8	An2
9	NC
10	DP
11	NC
12	An2
13	COMMA
14	An3
15	NC
16	An3
17	NC
18	NC
19	NC
20	NC
21	NC
22	NC
23	NC
24	An4
25	NC
26	An4
27	NC
28	NC
29	NC
30	An5
31	Keep Alive KA
32	An5
33	D
34	Keep Alive An
35	E
36	An6
37	G
38	An6
39	F

EC397

Pin	④a
1	KA-A
2	An1
3	KA-B
4	An1
5	KA-C
6	R Keep Alive An
7	R Keep Alive KA
8	An2
9	NC
10	An2
11	NC
12	An3
13	KA-Comma
14	An3
15	Nc
16	An4
17	NO PIN
18	NO PIN
19	NO PIN
20	NO PIN
21	NO PIN
22	NO PIN
23	NO PIN
24	An4
25	NC
26	An5
27	NC
28	An5
29	NC
30	An6
31	L Keep Alive KA
32	An6
33	KA-D
34	L Keep Alive An
35	KA-E
36	An7
37	KA-G
38	An7
39	KA-F

48. SCHEMATIC DRAWINGS

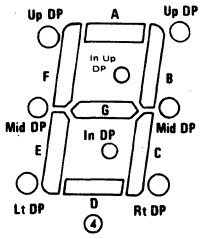

EC405

Pin	④ a
1	P (PM)
2	Filament
3	GND
4	E4
5	A4,D4
6	C4
7	E3
8	G3
9	D3
10	C3
11	Cln Lo
12	E2
13	A2,D2
14	C2
15	E1
16	D1
17	C1
18	GND
19	Filament (+)
20	DP
21	NO PIN
22	B1
23	GND
24	G1
25	A1
26	F1
27	B2
28	G2
29	F2
30	Cln Up
31	GND
32	B3
33	A3
34	F3
35	B4
36	G4
37	F4
38	GND
39	A (AM)
40	NO PIN

EC406

Pin	a ●
1	NC
2	KA-A
3	An1
4	KA-B
5	An1
6	KA-C
7	R Keep Alive An
8	R Keep Alive KA
9	An2
10	NC
11	NC
12	NC
13	An2
14	NC
15	An3
16	NC
17	An3
18	NC
19	NC
20	NC
21	NC
22	NC
23	NC
24	NC
25	An4
26	NC
27	An4
28	NC
29	NC
30	NC
31	An5
32	L Keep Alive KA
33	An5
34	KA-D
35	L Keep Alive An
36	KA-E
37	An6
38	KA-G
39	An6
40	KA-F

EC4012

Pin	④ a
1	Filament
2	NO PIN
3	(M)
4	dig 13
5	(M)
6	dig 12
7	(-)
8	(E)
9	dig 11
10	G
11	F
12	dig 10
13	E
14	D
15	dig 9
16	NC
17	NC
18	dig 8
19	NO PIN
20	NC
21	dig 7
22	NO PIN
23	NO PIN
24	dig 6
25	NC
26	dig 5
27	NC
28	NC
29	dig 4
30	COMMA 2
31	DP
32	dig 3
33	C
34	B
35	dig 2
36	A
37	Apostrophe
38	dig 1
39	NO PIN
40	Filament

48. SCHEMATIC DRAWINGS

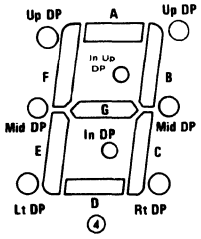

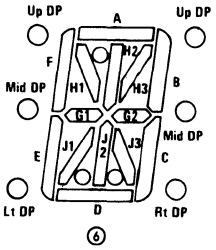

EC423

Pin	④ a
1	Keep Alive
2	Keep Alive An
3	DP1
4	NC
5	NC
6	An1
7	NC
8	NC
9	DP2
10	NC
11	NC
12	An2
13	NC
14	NC
15	DP3
16	NC
17	NC
18	An3
19	NC
20	NC
21	DP4
22	C1
23	B1
24	A1
25	F1
26	G1
27	E1
28	D1
29	C2
30	B2
31	A2
32	F2
33	G2
34	E2
35	D2
36	C3
37	B3
38	A3
39	F3
40	G3
41	E3
42	D3

EC4220

Pin	⑥ a
1	R Keep Alive An
2	An1
3	An2
4	An3
5	An4
6	R Keep Alive KA
7	NC
8	KA-A
9	KA-H
10	An5
11	KA-B
12	Comma KA
13	KA-D
14	An6
15	KA-E
16	KA-DP
17	An7
18	KA-J2
19	An8
20	An9
21	An10
22	An11
23	An12
24	An13
25	KA-G2
26	KA-C
27	An14
28	KA-J1
29	KA-J3
30	KA-G1
31	An15
32	KA-H3
33	KA-F
34	An16
35	KA-H2
36	L Keep Alive KA
37	An17
38	An18
39	An19
40	An20
41	L Keep Alive An
42	NC

EC4211

Pin	④ a
1	Filament
2	Gnd
3	Gnd
4	dig 11
5	NC
6	D
7	dig 10
8	E
9	G
10	F
11	dig 9
12	Comma 1
13	A
14	NO PIN
15	dig 8
16	NO PIN
17	NO PIN
18	dig 7
19	NO PIN
20	NO PIN
21	NO PIN
22	dig 6
23	NO PIN
24	NO PIN
25	dig 5
26	NO PIN
27	NO PIN
28	dig 4
29	NO PIN
30	B
31	C
32	dig 3
33	(½)
34	DP
35	NC
36	dig 2
37	Comma 2
38	POINTER
39	dig 1
40	NO PIN
41	NO PIN
42	Filament

48. SCHEMATIC DRAWINGS

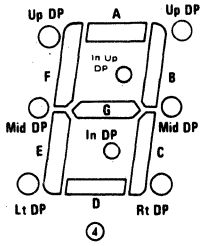

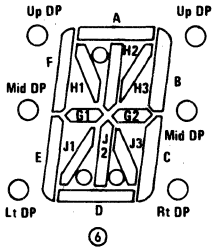

EC4932

Pin	a ⑥
1	Filament
2	DP
3	J2
4	J3
5	J1
6	H1
7	H3
8	H2
9	A
10	B
11	F
12	G1
13	G2
14	E
15	C
16	D
17	Filament
18	dig 32
19	dig 31
20	dig 30
21	dig 29
22	dig 28
23	dig 27
24	dig 26
25	dig 25
26	dig 24
27	dig 23
28	dig 22
29	dig 21
30	dig 20
31	dig 19
32	dig 18
33	dig 17
34	dig 16
35	dig 15
36	dig 14
37	dig 13
38	dig 12
39	dig 11
40	dig 10
41	dig 9
42	dig 8
43	dig 7
44	dig 6
45	dig 5
46	dig 4
47	dig 3
48	dig 2
49	dig 1

EC504

Pin	④ a
1	Keep Alive An
2	NC
3	Keep Alive
4	NC
5	An1
6	NC
7	NC
8	NC
9	NC
10	NC
11	An2
12	NC
13	NC
14	NC
15	NC
16	NC
17	An3
18	NC
19	NC
20	NC
21	NC
22	NC
23	An4
24	NC
25	NC
26	DP
27	NC
28	C
29	NC
30	B
31	NC
32	NC
33	NC
34	NC
35	NC
36	NC
37	NC
38	NC
39	NC
40	A
41	NC
42	F
43	NC
44	G
45	NC
46	(-)
47	E
48	D
49	NC
50	NC

48. SCHEMATIC DRAWINGS

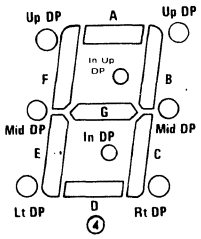

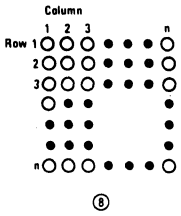

EC625

Pin	a ④
1	Keep Alive An
2	NC
3	Keep Alive
4	NC
5	An1
6	NC
7	NC
8	NC
9	NC
10	NC
11	An2
12	NC
13	NC
14	NC
15	NC
16	NC
17	An3
18	NC
19	NC
20	NC
21	NC
22	NC
23	An4
24	NC
25	NC
26	NC
27	NC
28	NC
29	An5
30	NC
31	NC

Pin	
32	DP
33	NC
34	C
35	NC
36	B
37	NC
38	NC
39	NC
40	NC
41	NC
42	NC
43	NC
44	NC
45	NC
46	NC
47	NC
48	NC
49	NC
50	NC
51	NC
52	A
53	NC
54	F
55	NC
56	G
57	NC
58	(–)
59	E
60	D
61	NC
62	NC

EC10420

Pin	a ⑧
1	Filament
2	31
3	32
4	33
5	34
6	35
7	dig 20
8	36
9	dig 19
10	37
11	dig 18
12	38
13	dig 17
14	39
15	dig 16
16	40
17	dig 15
18	41
19	dig 14
20	42
21	dig 13
22	43
23	dig 12
24	44
25	dig 11
26	45

Pin	
27	46
28	dig 10
29	47
30	dig 9
31	48
32	dig 8
33	49
34	dig 7
35	50
36	dig 6
37	51
38	dig 5
39	52
40	dig 4
41	53
42	dig 3
43	54
44	dig 2
45	55
46	dig 1
47	56
48	57
49	58
50	59
51	60
52	Filament

Pin	
53	NO PIN
54	30
55	29
56	28
57	27
58	26
59	dig 1
60	25
61	dig 2
62	24
63	dig 3
64	23
65	dig 4
66	22
67	dig 5
68	21
69	dig 6
70	20
71	dig 7
72	19
73	dig 8
74	18
75	dig 9
76	17
77	dig 10
78	16

Pin	
79	15
80	dig 11
81	14
82	dig 12
83	13
84	dig 13
85	12
86	dig 14
87	11
88	dig 15
89	10
90	dig 16
91	9
92	dig 17
93	8
94	dig 18
95	7
96	dig 19
97	6
98	dig 20
99	5
100	4
101	3
102	2
103	1
104	NO PIN

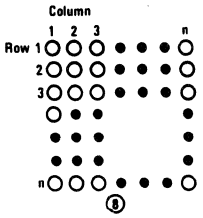

EC13220

Pin	a⑧
1	Filament
2	Filament
3	NO PIN
4	dig 24
5	NO PIN
6	21
7	dig 23
8	22
9	dig 22
10	23
11	24
12	dig 21
13	25
14	dig 20
15	NO PIN
16	26
17	dig 19
18	27
19	dig 18
20	28
21	29
22	dig 17
23	30
24	NO PIN
25	dig 16
26	NO PIN
27	dig 15
28	NO PIN
29	NO PIN
30	dig 14
31	NO PIN
32	dig 13
33	NO PIN

Pin	
34	NO PIN
35	dig 12
36	NO PIN
37	dig 11
38	NO PIN
39	NO PIN
40	dig 10
41	NO PIN
42	dig 9
43	NO PIN
44	NO PIN
45	dig 8
46	NO PIN
47	NO PIN
48	dig 7
49	NO PIN
50	dig 6
51	NO PIN
52	NO PIN
53	dig 5
54	31
55	dig 4
56	32
57	33
58	dig 3
59	34
60	dig 2
61	35
62	NO PIN
63	dig 1
64	NO PIN
65	Filament
66	Filament

Pin	
67	NO PIN
68	NO PIN
69	NO PIN
70	dig 1
71	NO PIN
72	20
73	dig 2
74	19
75	dig 3
76	18
77	17
78	dig 4
79	16
80	dig 5
81	NC
82	15
83	dig 6
84	14
85	dig 7
86	13
87	12
88	dig 8
89	11
90	NO PIN
91	dig 9
92	NO PIN
93	dig 10
94	NO PIN
95	NO PIN
96	dig 11
97	NO PIN
98	dig 12
99	NO PIN

Pin	
100	NO PIN
101	dig 13
102	NO PIN
103	dig 14
104	NO PIN
105	NO PIN
106	dig 15
107	NO PIN
108	dig 16
109	NO PIN
110	10
111	dig 17
112	9
113	8
114	dig 18
115	7
116	dig 19
117	6
118	NC
119	dig 20
120	5
121	dig 21
122	4
123	3
124	dig 22
125	2
126	dig 23
127	1
128	NO PIN
129	dig 24
130	NO PIN
131	NO PIN
132	NO PIN

EC5316zz

Term No	Segment Function Characters 1 - 8	Term No	Segment Function Characters 9 - 16
1	Anode Keep Alive (Left)	28	Comma
2	Keep Alive (Left)	29	Anode/Char 9
3	Anode Char 1	30	n
4	n	31	m
5	h	32	Anode/Char 10
6	Anode Char 2	33	a
7	m	34	k
8	Decimal	35	f
9	Anode Char 3	36	Anode/Char 11
10	k	37	j
11	d	38	e
12	Anode Char 4	39	Anode/Char 12
13	a	40	d
14	j	41	h
15	e	42	Anode/Char 13
16	Anode Char 5	43	b
17	g	44	c
18	f	45	g
19	Anode Char 6	46	Anode/Char 14
20	c	47	Decimal
21	r	48	r
22	Anode Char 7	49	Anode/Char 15
23	b	50	p
24	p	51	Anode/Char 16
25	Anode Char 8	52	Keep Alive (Right)
26	Comma	53	Anode Keep Alive (Right)
27	Not Used		

EC141

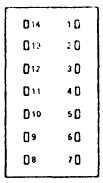

ELECTRICAL SIGNAL	zz	zy	zx	zw
Digit A BCD Input — 1	A4	A4	A2	A2
Digit A BCD Input — 2	A8	A8	A8	A8
Digit A BCD Input — 4	A9	A9	A10	A10
Digit A BCD Input — 8	A11	A11	A1	A1
Cp (store)	A5	A5	A9	A9
BI RBO	A1	A1	A12	A12
RBI	A10	A10	A13	A13
Decimal Point — Digit A	A13	A13	A4	A4
Digit B BCD Input — 1		B3	B4	B4
Digit B BCD Input — 2		B4	B8	B8
Digit B BCD Input — 4		B9	B9	B9
Digit B BCD Input — 8		B11	B11	B11
Cp (store)	A2	A2	B5	B5
BI RBO		B10	B1	B1
RBI		B1	B10	B10
Decimal Point — Digit B	B5	B5	B13	B13
Digit C BCD Input — 1			C3	
Digit C BCD Input — 2			C4	
Digit C BCD Input — 4			C9	
Digit C BCD Input — 8			C11	
Cp (store)			B2	B2
BI/RBO			C10	
RBI			C1	
Decimal Point — Digit C			C5	C5
+180 ±10 Vdc	B13	B13	C13	C13
+5 ±5% Vdc (1)	B2	B2	C2, A3	C2, A3
Ground (1)	B12	B12	A14, C12	A14, C12
Keep-Alive Cathode (2)	A14	A14	A5 or B14	A5 or B14
Digit "1"	B4			C4
Plus "+"	B3			C3
Minus "—"	B1			C1

48. SCHEMATIC DRAWINGS

EC142

ELECTRICAL SIGNAL	zz	zy	zx	zw
Digit A Input A (Cp)	A12	A12	A11	A11
Digit A Reset $R_{5(1)}$	A6	A6	A6	A6
Digit A Reset $R_{6(1)}$	A7	A7	A7	A7
Digit A Reset $R_{9(1)}$	A2	A2	A1	A1
Digit A Reset $R_{9(2)}$	A3	A3	A2	A2
D Output	A8	A8	A8	A8
Cp (store)	A5	A5	A10	A10
BI/RBO	A1	A1	A12	A12
RBI	A11	A11	A13	A13
Decimal Point (Digit A)	A13	A13	A4	A4
Digit B Input A (Cp)	B9	B9	B12	B12
Digit B Reset $R_{5(1)}$	B14	B14	B6	B6
Digit B Reset $R_{6(1)}$	B3	B3	B7	B7
Digit B Reset $R_{9(1)}$	B6	B6	B2	B2
Digit B Reset $R_{9(1)}$	B7	B7	B3	B3
D Output		B8	B8	B8
Cp (store)	B11	B11	B5	B5
BI/RBO		B10	B1	B1
RBI		B1	B11	B11
Decimal Point (Digit B)	B5	B5	B13	B13
Digit C Input A (Cp)			C9	C9
Digit C Reset $R_{6(1)}$			C14	C14
Digit C Reset $R_{6(2)}$			C3	C3
Digit C Reset $R_{9(1)}$			C6	C6
Digit C Reset $R_{9(2)}$			C7	C7
D Output			C8	
Cp (store)			C11	C11
BI/RBO			C10	
RBI			C1	
Decimal Point (Digit C)			C5	C5
+180 +10 VDC	B13	B13	C13	C13
+5 ±5% VDC (1)	B2	B2	A3, C2	A3, C2
Ground (1)	B12	B12	A14, C12	A14, C12
Keep-Alive Cathode (2)	A14	A14	A5 or B14	A5 or B14
Plus "+"	B8			C8
Minus "−"	B1			C1

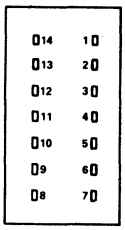

EC2813zz

7-Segment, 12-Digit Numeric, 1-Digit Symbol

PIN NO.	
1	F
2	13G
3	P(x)
4	12G
5	P(y)
6	11G
7	P(z)
8	P(com 1)
9	10G
10	9G
11	P(f)
12	P(e)
13	8G
14	P(d)
15	7G
16	6G
17	P(com 2)
18	P(DP)
19	5G
20	4G
21	P(c)
22	P(g)
23	3G
24	P(b)
25	2G
26	P(a)
27	1G
28	F

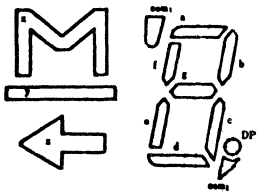

EC2610zz

5 x 12 Dot Matrix, 40 Character Positions

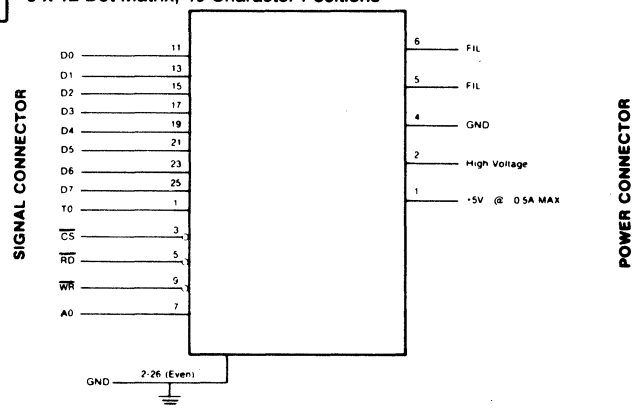

EC884zz

Table of Connector/Segment Interconnections

TERM NO.	SEGMENT FUNCTION CHARACTERS 5-45	CURRENT RATIO	TERM NO.	SEGMENT FUNCTION CHARACTERS 50-87	CURRENT RATIO
5	D.P. Digit 1	0.29	50	D.P. Digit 3	0.29
6	a Digit 1	1.04	51	a Digit 3	1.04
7	b Digit 1	1.00	52	b Digit 3	1.00
8	c Digit 1	1.23	53	c Digit 3	1.23
9	d Digit 1	1.05	54	d Digit 3	1.05
13	Anode Digit 1	----	58	Anode Digit 3	----
14	Anode Digit 1	----	59	Anode Digit 3	----
18	e Digit 1	1.15	63	e Digit 3	1.15
19	g Digit 1	1.04	64	g Digit 3	1.04
20	f Digit 1	0.94	65	f Digit 3	0.94
23	Right Keep Alive Anode	----	68	Left Keep Alive Anode	----
24	Right Keep Alive	0.03	69	Left Keep Alive	0.03
27	D.P. Digit 2	0.29	71	Plus (top vert.)	0.48
28	a Digit 2	1.04	73	D.P. Digit 4	0.29
29	b Digit 2	1.00	74	a Digit 4	1.04
30	c Digit 2	1.23	75	b Digit 4	1.00
31	d Digit 2	1.05	76	c Digit 4	1.23
35	Anode Digit 2	----	77	d Digit 4	1.05
36	Anode Digit 2	----	80	Anode Digit 4	----
40	e Digit 2	1.15	81	Anode Digit 4	----
41	g Digit 2	1.04	84	Plus (bot. vert.)	0.48
42	f Digit 2	0.94	85	e Digit 4	1.15
44	Anode Colon	----	86	g Digit 4	1.04
45	Colon	0.69	87	f Digit 4	0.94

48. SCHEMATIC DRAWINGS

EC1810zz — 14-Segment Multi-character Alphanumeric Display

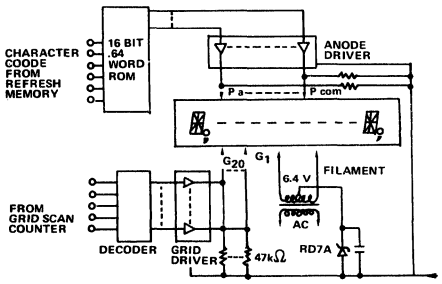

EC189zz — Dot Matrix Character Display

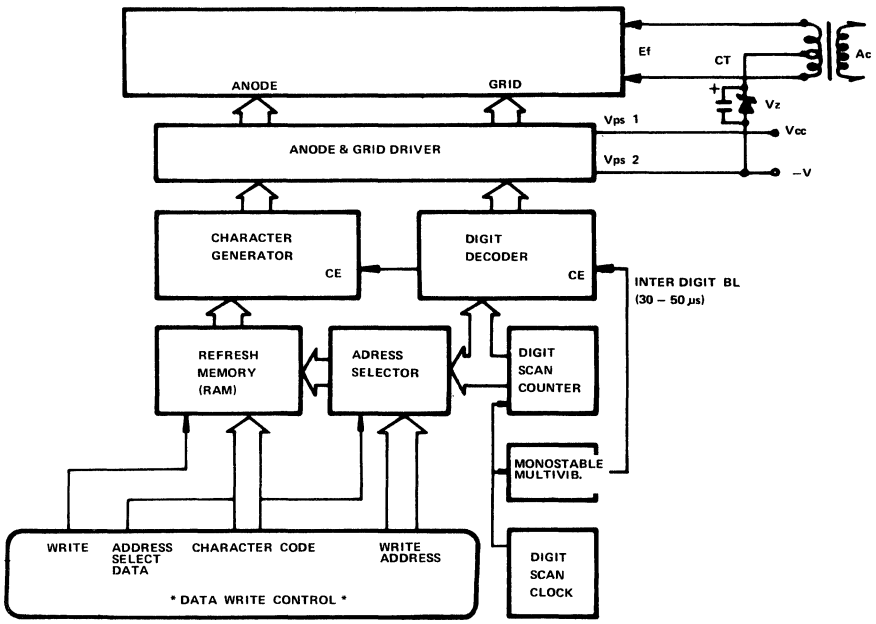

EC1816zz — Vacuum Fluorescent Display W/Control and Driver

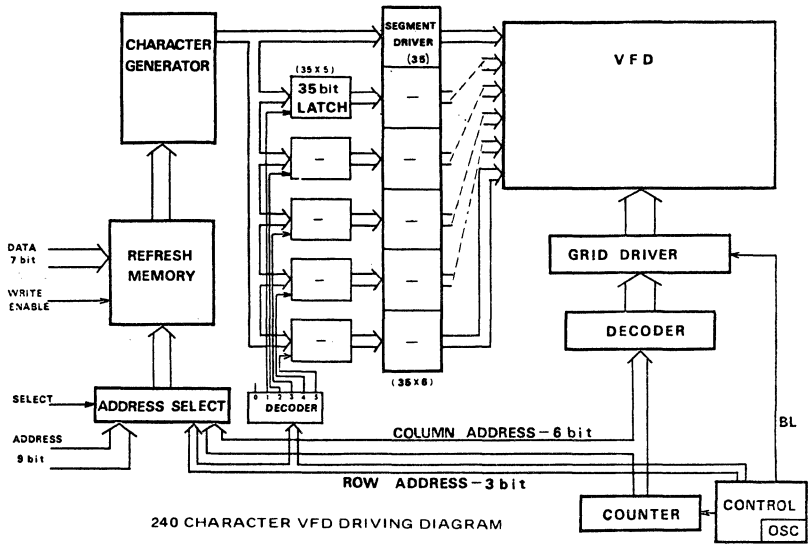

240 CHARACTER VFD DRIVING DIAGRAM

EC181zz — Dot Matrix Display W/Control and Driver

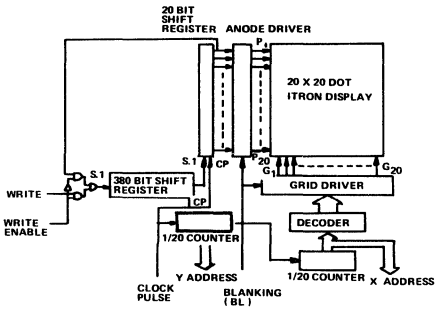

48. SCHEMATIC DRAWINGS

EC1810zy

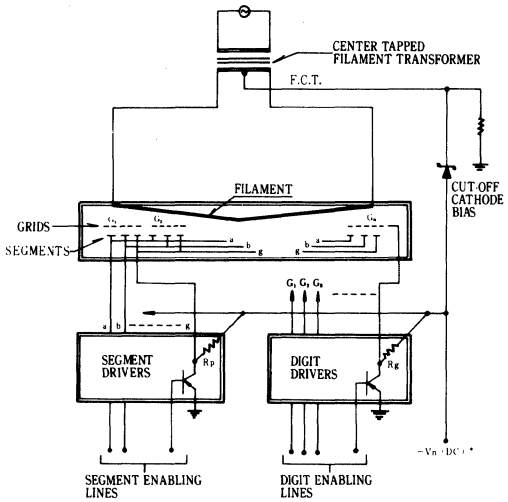

Transistor Drive Interface Circuit.

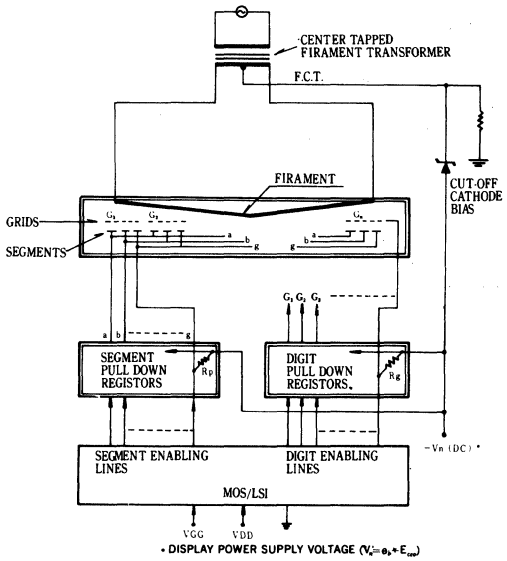

Direct Drive Interface Circuit.

EC1816zy

Multi-character Display System

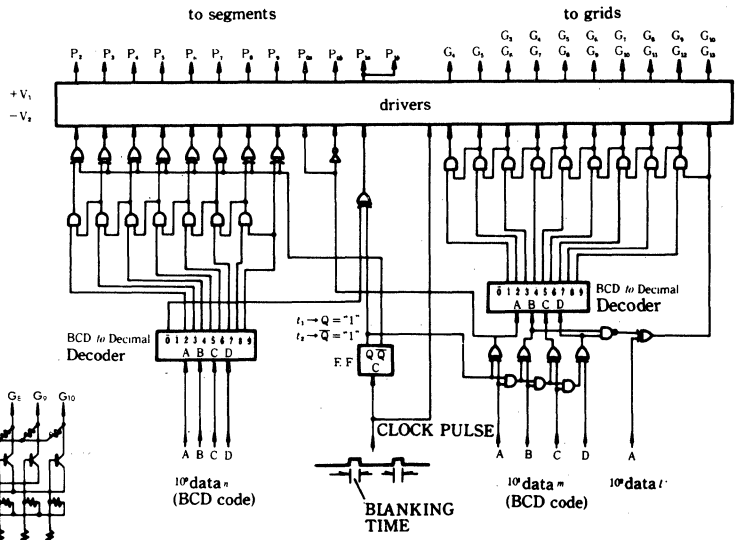

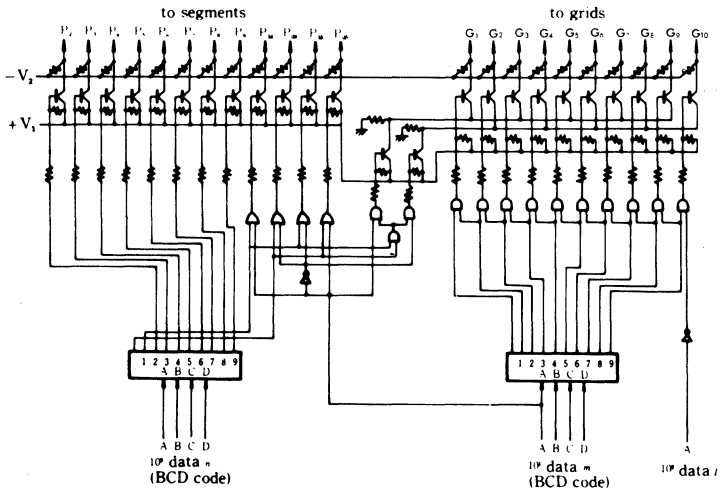

48. SCHEMATIC DRAWINGS

EC224zz

7 Segment, 4-Digit FIP

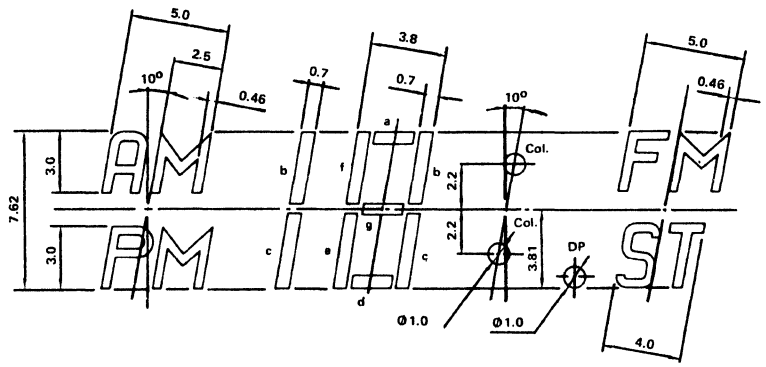

1	2	3	4	5	6	7	8	9	10
F	G_s	P(AM)	G_4	P(PM)	P(DP)	P(col)	P(a)	P(b)	G_3
11	12	13	14	15	16	17	18	19	20
G_c	P(f)	G_2	P(g)	G_{DP}	P(c)	P(e)	P(d)	P(ST)	P(FM)
21	22								
G_1	F								

NOTE:

G_1 : GRID FOR THE FIRST DIGIT (8) AND F M, S T, DIGIT.

G_2 : GRID FOR THE SECOND DIGIT (8).

G_3 : GRID FOR THE THIRD DIGIT (8).

G_4 : GRID FOR THE FOURTH DIGIT (1).

G_C : GRID FOR COLON.

G_{DP} : GRID FOR THE DECIMAL POINT.

G_s : GRID FOR THE A M AND P M DIGIT.

EC356zz

PIN	FUNCTION
1	Anode Annunciators A, K, N, P, R, S
2	Annunciator S Cathode
3	Annunciator R Cathode
4	Annunciator P Cathode
5	Annunciator N Cathode
6	Anode Annunciators L, M
7	Annunciator M Cathode
8	Annunciator L Cathode
9	Annunciator K Cathode
10	Anode 1st Digit on Right
11	Segment B Cathode
12	Segment G Cathode
13	Anode 1st Decimal Point from Right
14	Segment C Cathode
15	Anode - 2nd Digit from Right
16	Decimal Point Cathode
17	Anode 2nd Decimal Point from Right
18	Segment D Cathode
19	Anode 3rd Digit from Right
20	Decimal Point Cathode
21	Anode 3rd Decimal Point from Rt
22	NC
23	Anode 4th Digit from Right
24	NC
25	NC
26	Anode 4th Decimal Point from Rt
27	Segment E Cathode
28	Anode 5th Digit from Right
29	Segment F & Annunciator F Cathode
30	Anode - 5th Decimal Point Cathode
31	Segment H & Annunciator H Cathode
32	Anode 6th Digit from Right
33	Annunciator J Cathode
34	Segment A & Annunciator A Cathode
35	Anode Annunciators A, F, H, J

EC4040zz

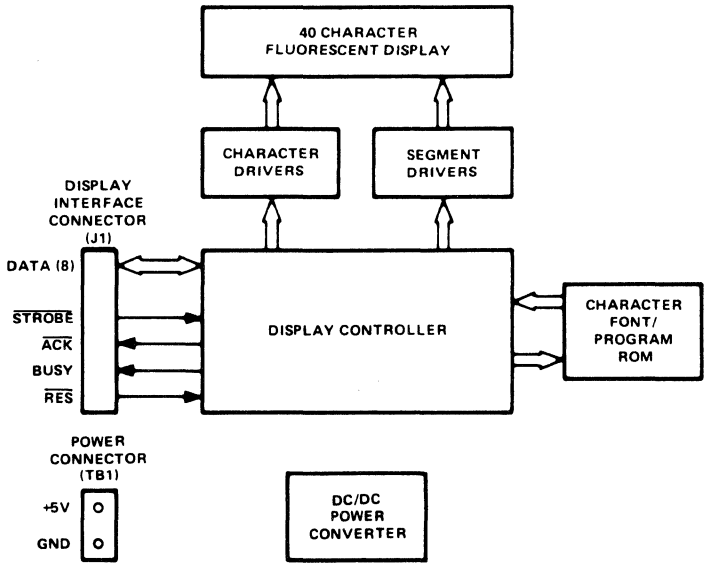

40-Character Display Block Diagram

48. SCHEMATIC DRAWINGS

EC1316zz LCD Display Module

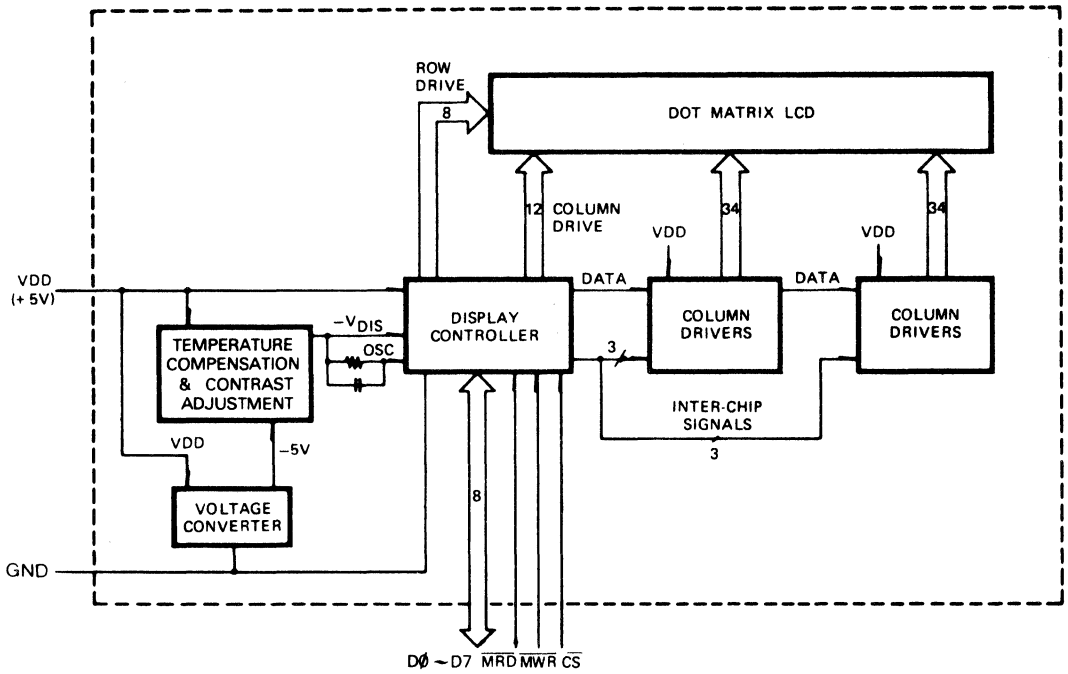

EC1332zz LCD Clock Display

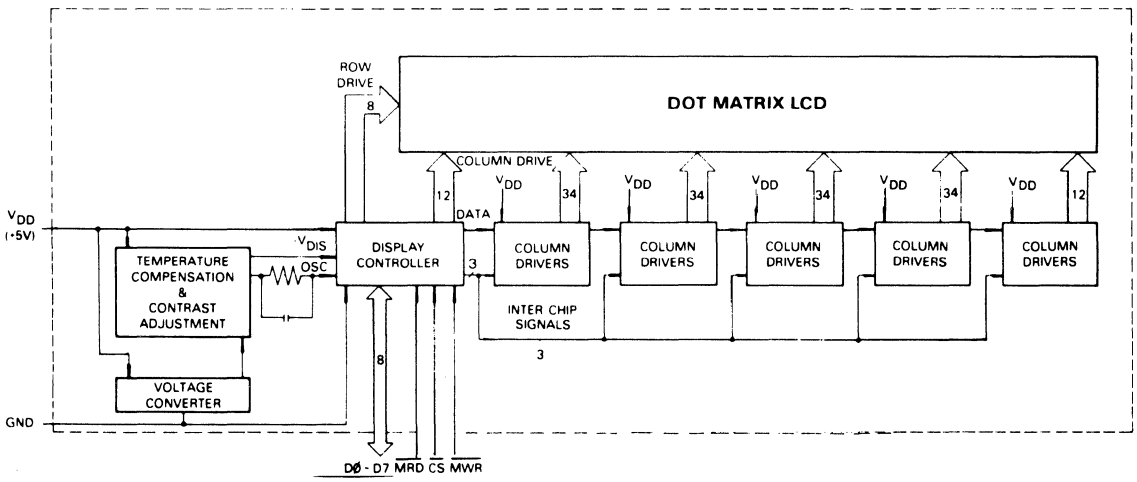

48. SCHEMATIC DRAWINGS

EC3324zz

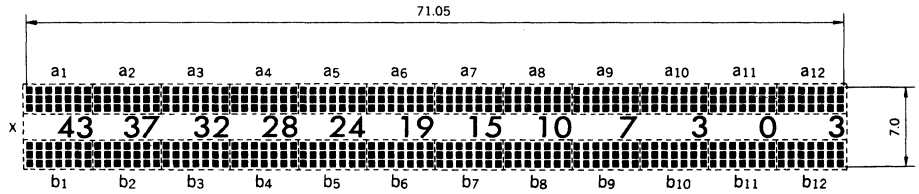

Terminal No.	1	2	3	4	5	6	7	8	9	10	11	12	13	14	15	16	17
Electrode	F	NP	G	P(a1)	P(a2)	P(a3)	P(a4)	P(a5)	P(a6)	G	P(b1)	P(b2)	P(b3)	P(b4)	P(b5)	P(b6)	P(b7)

Terminal No.	18	19	20	21	22	23	24	25	26	27	28	29	30	31	32	33
Electrode	P(b8)	P(b9)	P(b10)	P(b11)	P(b12)	NC	G	P(a7)	P(a8)	P(a9)	P(a10)	P(a11)	P(a12)	P(x)	G	F

EC14620z

1	2	3	4	5	6	7	8	9	10	11	12	13	14
P(12D)	P(12C)	P(12B)	P(12A)	P(14D)	P(14C)	P(14B)	P(14A)	P(16D)	P(16C)	P(16B)	P(16A)	P(18D)	P(18C)
15	16	17	18	19	20	21	22	23	24	25	26	27	28
P(18B)	P(18A)	P(20D)	P(20C)	P(20B)	P(20A)	64G	62G	60G	58G	56G	54G	52G	50G
29	30	31	32	33	34	35	36	37	38	39	40	41	42
48G	46G	44G	42G	40G	38G	36G	34G	32G	30G	28G	26G	24G	22G
43	44	45	46	47	48	49	50	51	52	53	54	55	56
20G	18G	16G	14G	12G	10G	8G	6G	4G	2G	P(19A)	P(19B)	P(19C)	P(19D)
57	58	59	60	61	62	63	64	65	66	67	68	69	70
P(17A)	P(17B)	P(17C)	P(17D)	P(15A)	P(15B)	P(15C)	P(15D)	P(13A)	P(13B)	P(13C)	P(13D)	P(11A)	P(11B)
71	72	73	74	75	76	77	78	79	80	81	82	83	84
P(11C)	P(11D)	F	P(10A)	P(10B)	P(10C)	P(10D)	P(8A)	P(8B)	P(8C)	P(8D)	P(6A)	P(6B)	P(6C)
85	86	87	88	89	90	91	92	93	94	95	96	97	98
P(6D)	P(4A)	P(4B)	P(4C)	P(4D)	P(2A)	P(2B)	P(2C)	P(2D)	1G	3G	5G	7G	9G
99	100	101	102	103	104	105	106	107	108	109	110	111	112
11G	13G	15G	17G	19G	21G	23G	25G	27G	29G	31G	33G	35G	37G
113	114	115	116	117	118	119	120	121	122	123	124	125	126
39G	41G	43G	45G	47G	49G	51G	53G	55G	57G	59G	61G	63G	P(1D)
127	128	129	130	131	132	133	134	135	136	137	138	139	140
P(1C)	P(1B)	P(1A)	P(3D)	P(3C)	P(3B)	P(3A)	P(5D)	P(5C)	P(5B)	P(5A)	P(7D)	P(7C)	P(7B)
141	142	143	144	145	146								
P(7A)	P(9D)	P(9C)	P(9B)	P(9A)	F								

48. SCHEMATIC DRAWINGS

EC9432zz

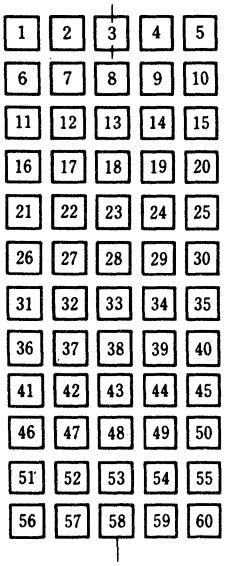

1	2	3	4	5	6	7	8	9	10	11	12	13	14	15	16	17	18	19	20
P35	P34	P33	P32	P31	P25	P24	P23	P22	P21	P15	P14	P13	P12	P11	P5	P4	P3	P2	P1
21	22	23	24	25	26	27	28	29	30	31	32	33	34	35	36	37	38	39	40
P6	P7	P8	P9	P10	P16	P17	P18	P19	P20	P26	P27	P28	P29	P30	P36	P37	P38	P39	P40
41	42	43	44	45	46	47	48	49	50	51	52	53	54	55	56	57	58	59	60
F	P41	P42	P43	P44	P45	P51	P52	P53	P54	P55	32G	31G	30G	29G	28G	27G	26G	25G	24G
61	62	63	64	65	66	67	68	69	70	71	72	73	74	75	76	77	78	79	80
23G	22G	21G	20G	19G	18G	17G	16G	15G	14G	13G	12G	11G	10G	9G	8G	7G	6G	5G	4G
81	82	83	84	85	86	87	88	89	90	91	92	93	94						
3G	2G	1G	P60	P59	P58	P57	P56	P50	P49	P48	P47	P46	F						

EC4811zz

1	2	3	4	5	6	7	8	9	10	11	12	13	14	15	16
F	P11	P21	P31	P41	P51	P12	P22	P32	P42	P52	P13	P23	P33	P43	P53
17	18	19	20	21	22	23	24	25	26	27	28	29	30	31	32
P14	P24	11G	10G	9G	8G	7G	6G	5G	4G	3G	2G	1G	P57	P47	P37
33	34	35	36	37	38	39	40	41	42	43	44	45	46	47	48
P27	P17	P56	P46	P36	P26	P16	P55	P45	P35	P25	P15	P54	P44	P34	F

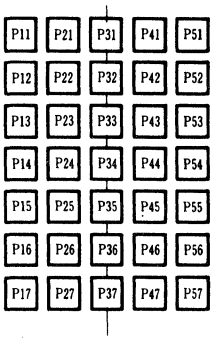

E002a

1	2	3	4	5	7	8	9	10	11	12
F	P(h_1)	P(h_2)	6G	P(g)	5G	P(e)	P(d)	4G	NC	NC
13	14	15	16	17	18	19	20	21	22	23
3G	NC	P(1,2)	P(COM)	2G	P(DP)	P(c)	1G	P(b)	P(a)	F

48. SCHEMATIC DRAWINGS

EC254zz

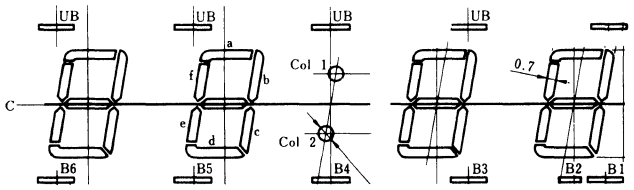

1	2	3	4	5	6	7	8	9	10	11	12	13
F	Gd	NC	4G	P(UB)	P(B6)	4G	P(B2, B4 / B5)	P(B3)	3G	P(B1)	NP	NP
14	15	16	17	18	19	20	21	22	23	24	25	
Gc	P(g)	P(f, Col1)	2G	P(e, Col2)	P(d)	P(c)	1G	P(b)	P(a)	NP	F	

EC11680z

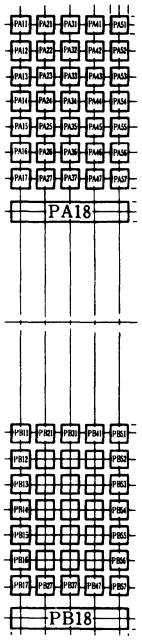

1	2	3	4	5	6	7	8	9	10	11	12
F	PB47	PB37	PB56	PB46	PB16	PB55	PB25	40G	39G	38G	37G
13	14	15	16	17	18	19	20	21	22	23	24
36G	35G	34G	33G	32G	31G	30G	29G	28G	27G	26G	25G
25	26	27	28	29	30	31	32	33	34	35	36
24G	23G	22G	21G	PB18	PA18	20G	19G	18G	17G	16G	15G
37	38	39	40	41	42	43	44	45	46	47	48
14G	13G	12G	11G	10G	9G	8G	7G	6G	5G	4G	3G
49	50	51	52	53	54	55	56	57	58	59	60
2G	1G	PB35	PB45	PB26	PB36	PB17	PB27	PB57	F	F	PB54
61	62	63	64	65	66	67	68	69	70	71	72
PB44	PB14	PB53	PB23	PB13	PB32	PB22	PB41	PB31	PA47	PA37	PA56
73	74	75	76	77	78	79	80	81	82	83	84
PA46	PA16	PA55	PA25	PA15	PA34	PA24	PA43	PA33	PA52	PA42	PA12
85	86	87	88	89	90	91	92	93	94	95	96
PA51	PA21	PA11	PA31	PA41	PA22	PA32	PA13	PA23	PA53	PA14	PA44
97	98	99	100	101	102	103	104	105	106	107	108
PA54	PA35	PA45	PA26	PA36	PA17	PA27	PA57	PB11	PB21	PB51	PB12
109	110	111	112	113	114	115	116				
PB42	PB52	PB33	PB43	PB24	PB34	PB15	F				

48. SCHEMATIC DRAWINGS

EC14260z

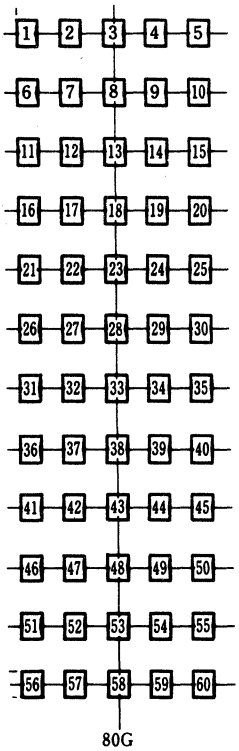

1	2	3	4	5	6	7	8	9	10	11	12	13	14	15	16	17	18	19	20
80G	79G	78G	77G	76G	75G	74G	73G	72G	71G	70G	69G	68G	67G	66G	65G	64G	63G	62G	61G
21	22	23	24	25	26	27	28	29	30	31	32	33	34	35	36	37	38	39	40
60G	59G	58G	57G	56G	55G	54G	53G	52G	51G	50G	49G	48G	47G	46G	45G	44G	43G	42G	41G
41	42	43	44	45	46	47	48	49	50	51	52	53	54	55	56	57	58	59	60
40G	39G	38G	37G	36G	35G	34G	33G	32G	31G	30G	29G	28G	27G	26G	25G	24G	23G	22G	21G
61	62	63	64	65	66	67	68	69	70	71	72	73	74	75	76	77	78	79	80
20G	19G	18G	17G	16G	15G	14G	13G	12G	11G	10G	9G	8G	7G	6G	5G	4G	3G	2G	1G
81	82	83	84	85	86	87	88	89	90	91	92	93	94	95	96	97	98	99	100
F	P60	P59	P58	P57	P56	P55	P54	P53	P52	P51	P50	P49	P48	P47	P46	P45	P44	P43	P42
101	102	103	104	105	106	107	108	109	110	111	112	113	114	115	116	117	118	119	120
P41	P40	P39	P38	P37	P36	P35	P34	P33	P32	P31	P1	P2	P3	P4	P5	P6	P7	P8	P9
121	122	123	124	125	126	127	128	129	130	131	132	133	134	135	136	137	138	139	140
P10	P11	P12	P13	P14	P15	P16	P17	P18	P19	P20	P21	P22	P23	P24	P25	P26	P27	P28	P29
141	142																		
P30	F																		

EC2810zz

Terminal No.	1	2	3	4	5	6	7	8	9	10	11	12	13	14
Electrode	F	F	11G	P(AP)	P(f)	10G	P(g)	P(e)	9G	P(com)	8G	P(DP)	7G	6G
Terminal No.	15	16	17	18	19	20	21	22	23	24	25	26	27	28
Electrode	5G	P(d)	P(c)	4G	P($\frac{1}{2}$)	P(b)	3G	P(a)	P(S3)	2G	P(S2)	P(S1)	1G	F

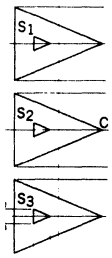

EC2912zz

Terminal No.	1	2	3	4	5	6	7	8	9	10	11	12	13	14	15
Electrode	F	P(x)	13G	P(y)	12G	P(z)	11G	P(com)	10G	P(f)	9G	P(e)	8G	P(d)	7G
Terminal No.	16	17	18	19	20	21	22	23	24	25	26	27	28	29	
Electrode	NP	6G	P(DP)	5G	P(c)	4G	P(g)	3G	P(b)	2G	P(a)	1G	NP	F	

NP : No pin

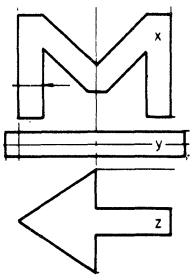

48. SCHEMATIC DRAWINGS

EC3312zz

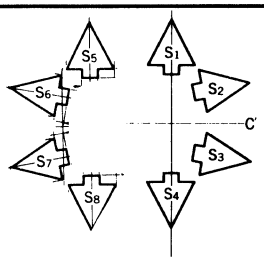

1G

Terminal No.	1	2	3	4	5	6	7	8	9	10	11	12	13	14	15	16	17
Electrode	F	P(S5)	P(S6)	P(S7)	P(S8)	P(f)	P(g)	P(e)	P(DP)	P(d)	13G	12G	11G	10G	9G	8G	7G

Terminal No.	18	19	20	21	22	23	24	25	26	27	28	29	30	31	32	33
Electrode	6G	5G	4G	3G	2G	1G	P(com)	P(c)	P($\frac{1}{2}$)	P(b)	P(a)	P(S4)	P(S3)	P(S2)	P(S1)	F

EC5616zz

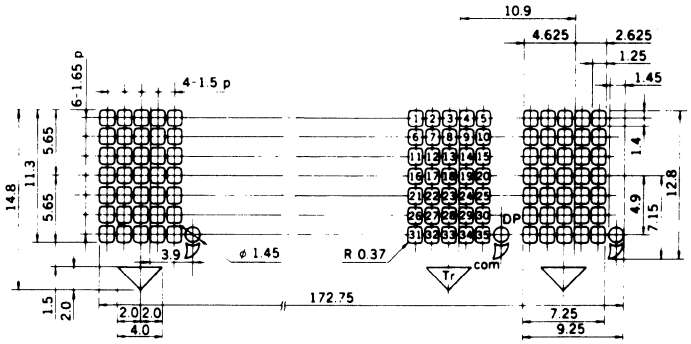

Terminal No.	1	2	3	4	5	6	7	8	9	10	11	12	13	14	15	16	17	18	19
Electrode	F	P(17)	P(15)	P(13)	P(11)	P(9)	P(7)	P(5)	P(3)	P(1)	P(2)	P(4)	P(6)	P(8)	P(10)	P(12)	P(14)	P(16)	P(18)

Terminal No.	20	21	22	23	24	25	26	27	28	29	30	31	32	33	34	35	36	37	38
Electrode	F	P(19)	P(21)	P(23)	P(25)	P(27)	P(29)	P(31)	P(33)	P(35)	P(com)	16G	15G	14G	13G	12G	11G	10G	9G

Terminal No.	39	40	41	42	43	44	45	46	47	48	49	50	51	52	53	54	55	56
Electrode	P(Tr)	8G	7G	6G	5G	4G	3G	2G	1G	P(DP)	P(34)	P(32)	P(30)	P(28)	P(26)	P(24)	P(22)	P(20)

EC209

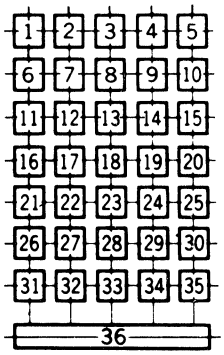

EC5820zz

Terminal No.	1	2	3	4	5	6	7	8	9	10	11	12	13	14	15	16	17	18	19	20
Electrode	F	P(35)	P(32)	P(31)	P(28)	P(27)	P(24)	P(23)	P(20)	P(19)	P(16)	P(15)	P(12)	P(11)	P(8)	P(7)	P(4)	P(3)	P(1)	P(2)

Terminal No.	21	22	23	24	25	26	27	28	29	30	31	32	33	34	35	36	37	38	39	40
Electrode	P(5)	P(6)	P(9)	P(10)	P(13)	P(14)	P(17)	P(18)	P(21)	P(22)	P(25)	P(26)	P(29)	P(30)	P(33)	P(34)	F	G(20)	G(19)	G(18)

Terminal No.	41	42	43	44	45	46	47	48	49	50	51	52	53	54	55	56	57	58
Electrode	G(17)	G(16)	G(15)	G(14)	G(13)	G(12)	G(11)	P(36)	G(10)	G(9)	G(8)	G(7)	G(6)	G(5)	G(4)	G(3)	G(2)	G(1)

48. SCHEMATIC DRAWINGS

EC7840zz

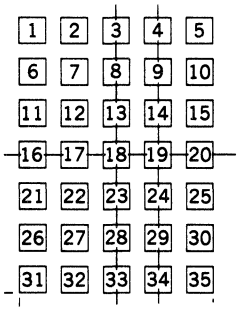

Terminal No.	1	2	3	4	5	6	7	8	9	10	11	12	13	14	15	16
Electrode	F	P(19)	P(20)	P(21)	P(22)	P(23)	P(24)	P(25)	P(26)	P(27)	P(28)	P(29)	P(30)	P(31)	P(32)	P(33)
Terminal No.	17	18	19	20	21	22	23	24	25	26	27	28	29	30	31	32
Electrode	P(34)	P(35)	40G	39G	38G	37G	36G	35G	34G	33G	32G	31G	30G	29G	28G	27G
Terminal No.	33	34	35	36	37	38	39	40	41	42	43	44	45	46	47	48
Electrode	26G	25G	24G	23G	22G	21G	NC	F	P(18)	P(17)	P(16)	P(15)	P(14)	P(13)	P(12)	P(11)
Terminal No.	49	50	51	52	53	54	55	56	57	58	59	60	61	62	63	64
Electrode	P(10)	P(9)	P(8)	P(7)	P(6)	P(5)	P(4)	P(3)	P(2)	P(1)	1G	2G	3G	4G	5G	6G
Terminal No.	65	66	67	68	69	70	71	72	73	74	75	76	77	78		
Electrode	7G	8G	9G	10G	11G	12G	13G	14G	15G	16G	17G	18G	19G	20G		

EC3324zy

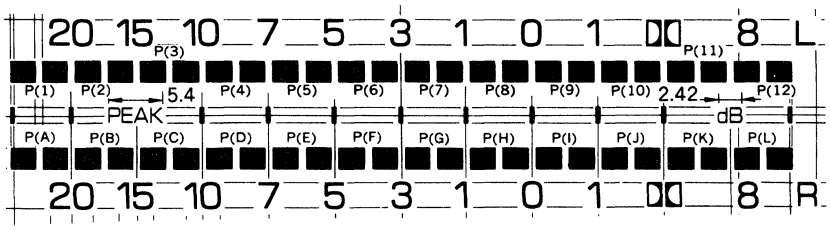

Terminal No.	1	2	3	4	5	6	7	8	9	10	11	12	13	14	15	16
Electrode	F	P(PEAK)	P(X)	P(1)	G	P(2)	P(3)	P(4)	P(5)	P(6)	P(A)	P(B)	P(C)	P(D)	P(E)	P(F)
Terminal No.	17	18	19	20	21	22	23	24	25	26	27	28	29	30	31	32	33
Electrode	P(G)	G	P(H)	P(I)	P(J)	P(K)	P(L)	P(7)	P(8)	P(9)	P(10)	P(11)	P(12)	NP	P(dB)	NP	F

EC3324zx

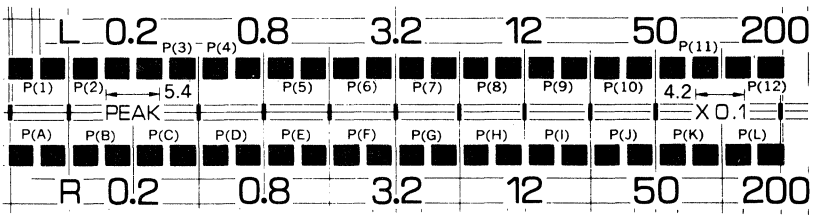

Terminal No.	1	2	3	4	5	6	7	8	9	10	11	12	13	14	15	16
Electrode	F	P(PEAK)	P(X)	P(1)	G	P(2)	P(3)	P(4)	P(5)	P(6)	P(A)	P(B)	P(C)	P(D)	P(E)	P(F)
Terminal No.	17	18	19	20	21	22	23	24	25	26	27	28	29	30	31	32	33
Electrode	P(G)	G	P(H)	P(I)	P(J)	P(K)	P(L)	P(7)	P(8)	P(9)	P(10)	P(11)	P(12)	NP	P(×0.1)	NP	F

48. SCHEMATIC DRAWINGS

EC3324zw

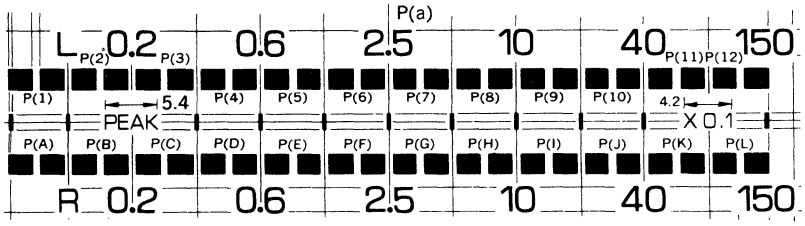

Terminal No.	1	2	3	4	5	6	7	8	9	10	11	12	13	14	15	16
Electrode	F	P(PEAK)	P(X)	P(1)	G	P(2)	P(3)	P(4)	P(5)	P(6)	P(A)	P(B)	P(C)	P(D)	P(E)	P(F)
Terminal No.	17	18	19	20	21	22	23	24	25	26	27	28	29	30	31	32	33
Electrode	P(G)	G	P(H)	P(I)	P(J)	P(K)	P(L)	P(7)	P(8)	P(9)	P(10)	P(11)	P(12)	NP	P(×0.1)	NP	F

EC8826zz

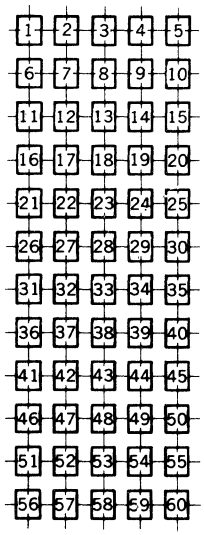

Terminal No.	1	2	3	4	5	6	7	8	9	10	11	12	13	14	15
Electrode	P25	P24	P23	P22	P21	P20	P19	P18	P17	P16	P15	P14	P13	P12	P11
Terminal No.	16	17	18	19	20	21	22	23	24	25	26	27	28	29	30
Electrode	P10	P9	P8	P7	P6	P5	P4	P3	P2	P1	P31	P32	P33	P34	P35
Terminal No.	31	32	33	34	35	36	37	38	39	40	41	42	43	44	45
Electrode	P36	P37	P38	P39	P40	P41	P42	P43	P44	P45	P46	P47	P48	P49	P50
Terminal No.	46	47	48	49	50	51	52	53	54	55	56	57	58	59	60
Electrode	P51	P52	P53	P54	P55	F	P26	P27	P28	P29	P30	G26	G25	G24	G23
Terminal No.	61	62	63	64	65	66	67	68	69	70	71	72	73	74	75
Electrode	G22	G21	G20	G19	G18	G17	G16	G15	G14	G13	G12	G11	G10	G9	G8
Terminal No.	76	77	78	79	80	81	82	83	84	85	86	87	88		
Electrode	G7	G6	G5	G4	G3	G2	G1	P60	P59	P58	P57	P56	F		

48. SCHEMATIC DRAWINGS

EC9232zz

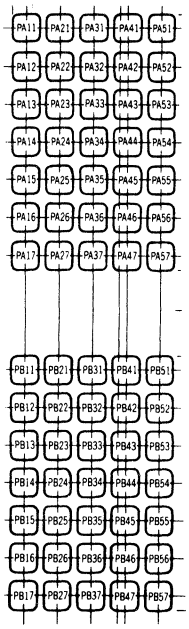

Terminal No.	1	2	3	4	5	6	7	8	9	10	11	12	13	14
Electrode	PB21	PB31	PB41	PB51	PB13	PB23	PB33	PB43	PB53	PB15	PB25	PB35	PB45	PB55
Terminal No.	15	16	17	18	19	20	21	22	23	24	25	26	27	28
Electrode	PB17	PB27	PB37	PB47	PB57	P(DP.B)	16G	15G	14G	13G	12G	11G	10G	9G
Terminal No.	29	30	31	32	33	34	35	36	37		38	39	40	41
Electrode	8G	7G	6G	5G	4G	3G	2G	1G	P(com.B)		PB56	PB46	PB36	PB26
Terminal No.	42	43	44	45	46	47	48	49	50	51	52	53	54	55
Electrode	PB16	PB54	PB44	PB34	PB24	PB14	PB52	PB42	PB32	PB22	PB12	F	PB11	P(com.A)
Terminal No.	56	57	58	59	60	61	62	63	64	65	66	67	68	69
Electrode	PA56	PA46	PA36	PA26	PA16	PA54	PA44	PA34	PA24	PA14	PA52	PA42	PA32	PA22
Terminal No.	70	71	72	73	74	75	76	77	78	79	80	81	82	83
Electrode	PA12	PA11	PA21	PA31	PA41	PA51	PA13	PA23	PA33	PA43	PA53	PA15	PA25	PA35
Terminal No.	84	85	86	87	88	89	90	91	92					
Electrode	PA45	PA55	PA17	PA27	PA37	PA47	PA57	P(DP.A)	F					

EC7032zz

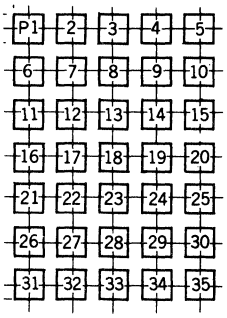

Terminal No.	1	2	3	4	5	6	7	8	9	10	11	12	13	14	15	16	17	18	19	20
Electrode	F	P36	P35	P32	P31	P28	P27	P24	P23	P20	P19	P16	P15	P12	P11	P8	P7	P4	P3	P1
Terminal No.	21	22	23	24	25	26	27	28	29	30	31	32	33	34	35	36	37	38	39	40
Electrode	P2	P5	P6	P9	P10	P13	P14	P17	P18	P21	P22	P25	P26	P29	P30	P33	P34	F	32G	31G
Terminal No.	41	42	43	44	45	46	47	48	49	50	51	52	53	54	55	56	57	58	59	60
Electrode	30G	29G	28G	27G	26G	25G	24G	23G	22G	21G	20G	19G	18G	17G	16G	15G	14G	13G	12G	11G
Terminal No.	61	62	63	64	65	66	67	68	69	70										
Electrode	10G	9G	8G	7G	6G	5G	4G	3G	2G	1G										

EC10240zx

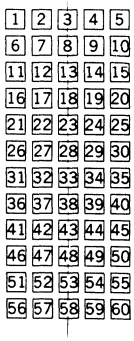

Terminal No.	1	2	3	4	5	6	7	8	9	10	11	12	13	14	15	16	17	18	19	20
Electrode	P35	P34	P33	P32	P31	P25	P24	P23	P22	P21	P15	P14	P13	P12	P11	P5	P4	P3	P2	P1
Terminal No.	21	22	23	24	25	26	27	28	29	30	31	32	33	34	35	36	37	38	39	40
Electrode	P6	P7	P8	P9	P10	P16	P17	P18	P19	P20	P26	P27	P28	P29	P30	P36	P37	P38	P39	P40
Terminal No.	41	42	43	44	45	46	47	48	49	50	51	52	53	54	55	56	57	58	59	60
Electrode	F	P41	P42	P43	P44	P45	P51	P52	P53	P54	P55	40G	39G	38G	37G	36G	35G	34G	33G	32G
Terminal No.	61	62	63	64	65	66	67	68	69	70	71	72	73	74	75	76	77	78	79	80
Electrode	31G	30G	29G	28G	27G	26G	25G	24G	23G	22G	21G	20G	19G	18G	17G	16G	15G	14G	13G	12G
Terminal No.	81	82	83	84	85	86	87	88	89	90	91	92	93	94	95	96	97	98	99	100
Electrode	11G	10G	9G	8G	7G	6G	5G	4G	3G	2G	1G	P60	P59	P58	P57	P56	P50	P49	P48	P47
Terminal No.	101	102																		
Electrode	P46	F																		

48. SCHEMATIC DRAWINGS

EC2812zz

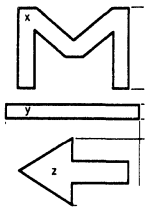

Terminal No.	1	2	3	4	5	6	7	8	9	10
Electrode	F	13G	P(x)	12G	P(y)	11G	P(z)	P(com1)	10G	9 G
Terminal No.	11	12	13	14	15	16	17	18	19	20
Electrode	P(f)	P(e)	8 G	P(d)	7 G	6 G	P(com2)	P(DP)	5 G	4 G
Terminal No.	21	22	23	24	25	26	27	28		
Electrode	P(c)	P(g)	3 G	P(b)	2 G	P(a)	1 G	F		

EC3316zz

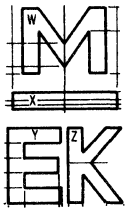

Terminal No.	1	2	3	4	5	6	7	8	9	10	11	12	13	14	15	16	17	18
Electrode	F	17G	P(W)	P(X)	16G	P(Y)	P(Z)	15G	P(com)	P(f)	14G	P(g)	13G	12G	11G	10G	9G	8G
Terminal No.	19	20	21	22	23	24	25	26	27	28	29	30	31	32	33			
Electrode	7G	6G	5G	P(d)	4G	P(DP)	P(e)	3G	P(c)	P(l)	2G	P(b)	P(a)	1G	F			

ED2-1 LED Light Bar

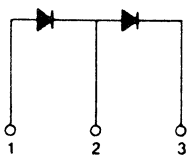

ED2-3 LED Light Bar

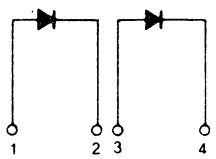

ED2-2 LED Light Bar

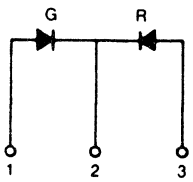

48. SCHEMATIC DRAWINGS

ED6-1 LED Light Bar

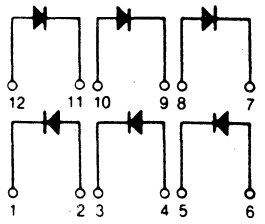

ED4-1 LED Light Bar

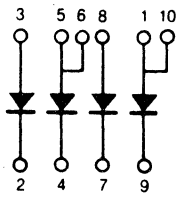

ED9 LED Light Bar

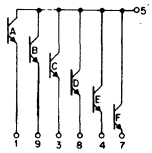

ED3-1 LED Light Bar

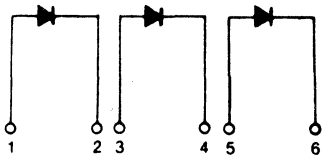

ED5-1 LED Array

PIN No.	CONNECTION	PIN No.	CONNECTION
1	ANODE	6	CATHODE
2	CATHODE	7	ANODE
3	ANODE	8	CATHODE
4	CATHODE	9	ANODE
5	ANODE	10	CATHODE

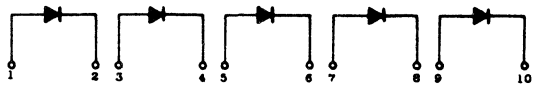

ED8 LED Light Bar

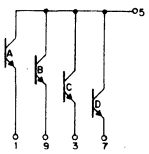

ED7 LED Light Bar

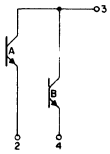

48. SCHEMATIC DRAWINGS

FA2 Reflex Detector

	A	K	C	E	COMMENTS
FA2	1	2	4	3	
FA2a	3	4	1	2	
FA2b	Red	Black	Blue	Yellow	
FA2c	Red	Black	White	Green	
FA2d	2	1	4	3	
FA2e	1	2	3	4	
FA2f	Orange	Green	White	Blue	
FA2g	Orange	Green	Blue	White	See Outline Dwg

	A	K	C	E
FA2f	ORANGE	GREEN	WHITE	BLUE

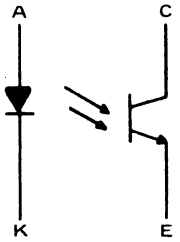

FA3 Gap Detector

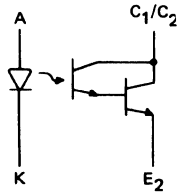

	A	K	C1/C2	E2	COMMENTS
FA3	1	2	4	3	
FA3a	2	1	4	3	
FA3b	Red	Black	Blue	Yellow	
FA3c	1	2	3	4	
FA3d	Red	Black	White	Green	
FA3e	Red	Black	Yellow	Blue	
FA3f	Orange	Green	Blue	White	See Outline Dwg

FA4 Gap Detector

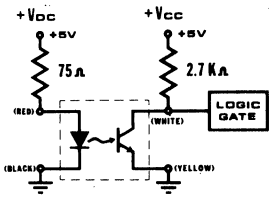

FA6 Reflex Detector

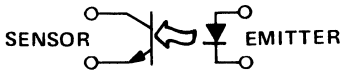

FA8 Reflex Detector

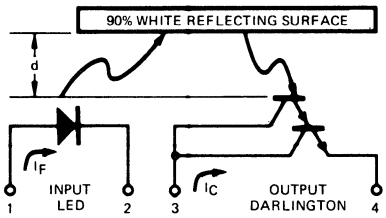

	A	B	C	D
FA8	1	2	3	4
FA8a	Red	Black	White	Green

FA9 Dual Reflex Detector

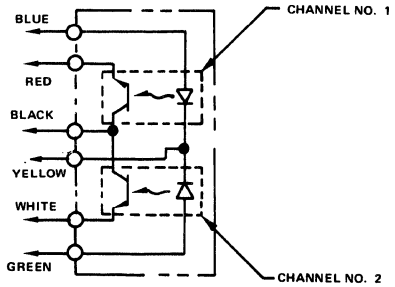

FA10 Dual Optocoupler

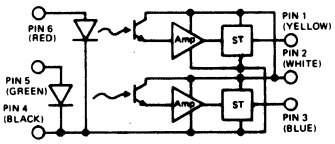

FA11 Dual Optical Switch W/Darlington Output

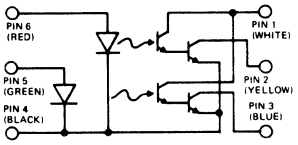

FA12 Dual Optical Switch W/Darlington Output

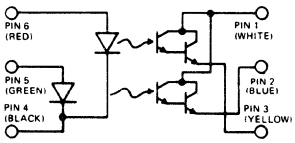

FA13 Optical Switc W/Darlington Output

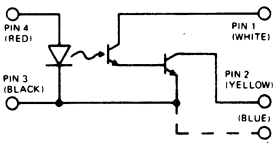

FA13a - HAS 5 LEAD WIRES WITH THE GROUNDS ISOLATED.

FA14 Optical Switch W/Amplifier Output

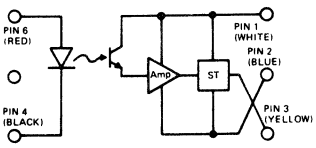

48. SCHEMATIC DRAWINGS

FA15 Reflex Detector

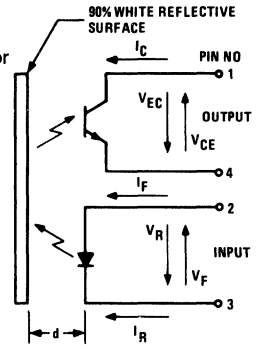

	C	E	A	K
FA15	1	4	2	3
FA15a	White	Green	Red	Black

FA16 Emitter/Sensor Array

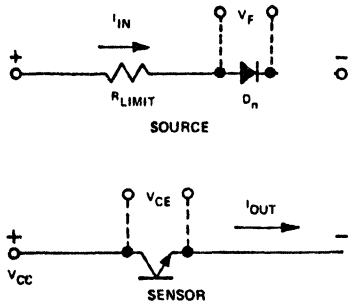

FA31 Photo-Densiometer Detector

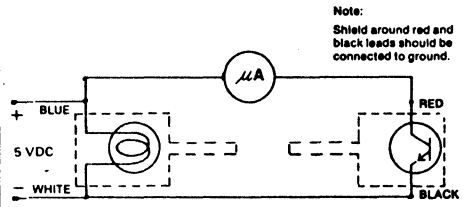

FA18 Color Detector

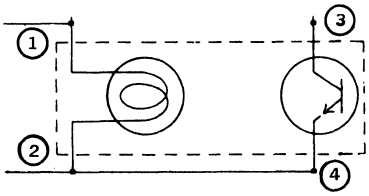

	PIN NO			
	1	2	3	4
FA18	White	White	Red	Black
FA18a	Green	White	Red	Black
FA18b	Blue	White	Red	Black

FA51 Parallel Opposed Dual Pyroelectric Detector w/Source Follower

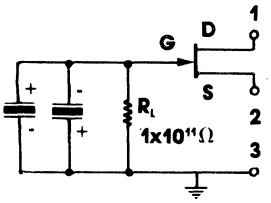

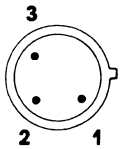

1. V+
2. OUTPUT
3. GND/CASE

FA20 Emitter/Sensor Pair

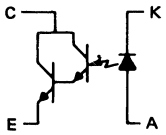

	E	C	A	K
FA20	2	1	3	4
FA20a	1	4	2	3
FA20b	4	3	1	2
FA20c	3	4	1	2

FA22 12-Element Emitter/Sensor Array

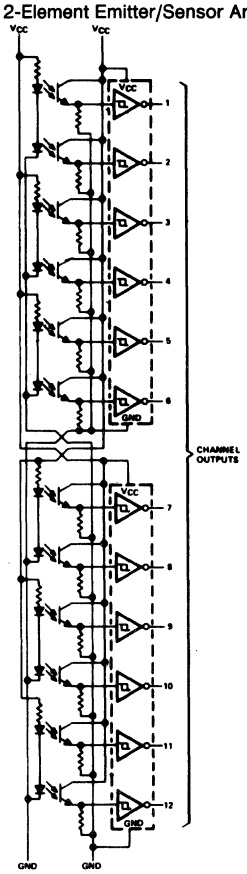

FA23 Emitter/Sensor Pair

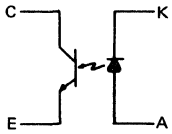

	A	K	E	C
FA23	3	4	2	1
FA23a	1	2	4	3
FA23b	2	1	4	3
FA23c	4	2	1	3
FA23d	4	3	2	1

FA24 Gap Detector

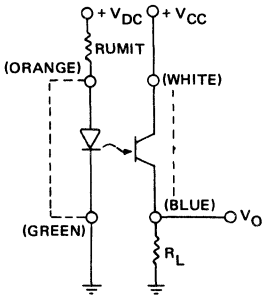

48. SCHEMATIC DRAWINGS

FA76 Optical Switch

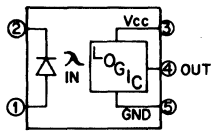

FA32 Gap Detector/Optical Switch

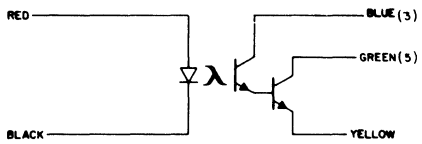

FA33 Optical Switch/Gap Detector

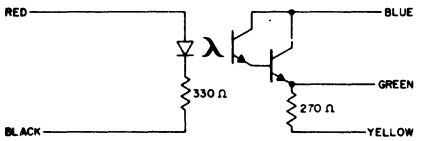

FA34 Optical Switch/Gap Detector

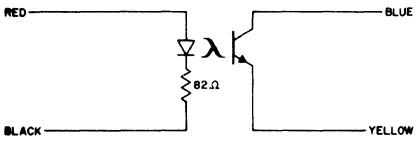

FA35 Reflex Detector

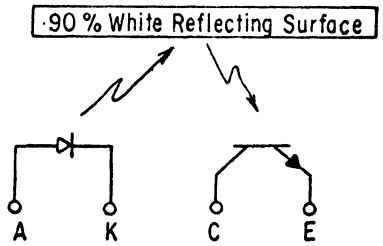

	A	K	C	E
FA35	2	1	4	3

FA36 Emitter/Sensor Array

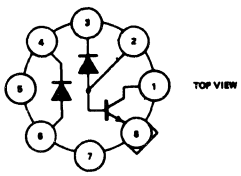

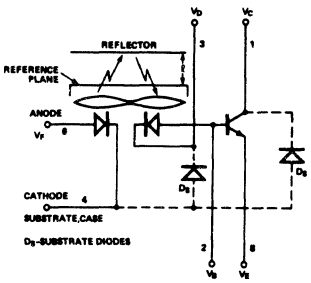

PIN	FUNCTION
1	TRANSISTOR COLLECTOR
2	TRANSISTOR BASE, PHOTODIODE ANODE
3	PHOTODIODE CATHODE
4	LED CATHODE, SUBSTRATE, CASE
5	NC
6	LED ANODE
7	NC
8	TRANSISTOR EMITTER

FA37

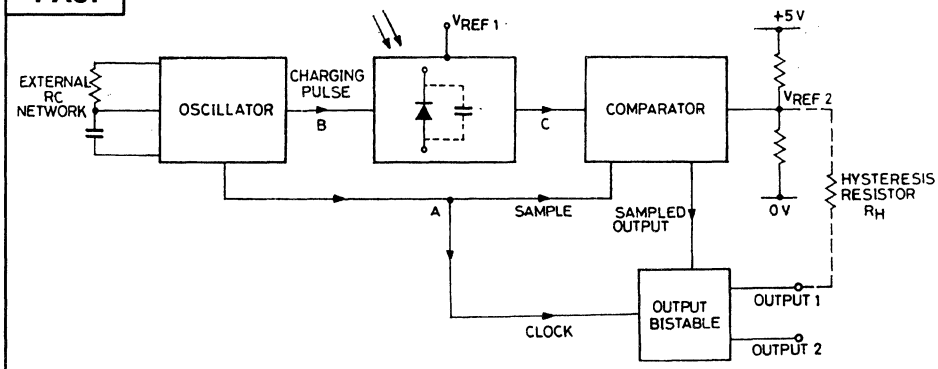

PHOTOSWITCH BLOCK DIAGRAM

FA38 Dual Emitter/Sensor Pair

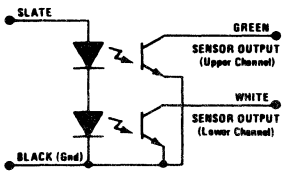

FA53 Reflective Scanner

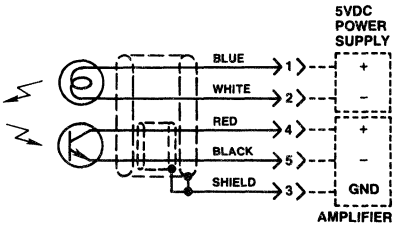

48. SCHEMATIC DRAWINGS

FA41 Gap Detector

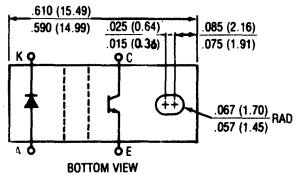

FA42 Gap Detector

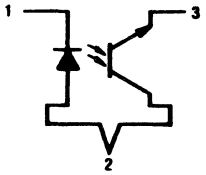

FA43 Optocoupler

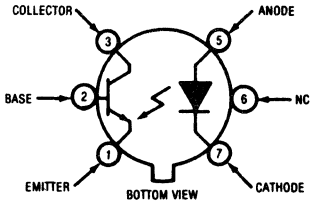

FA44 Optocoupler

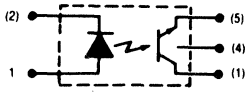

FA46 Emitter/Sensor Pair

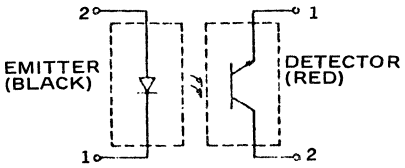

FA45 Optical Paper Tape Reader

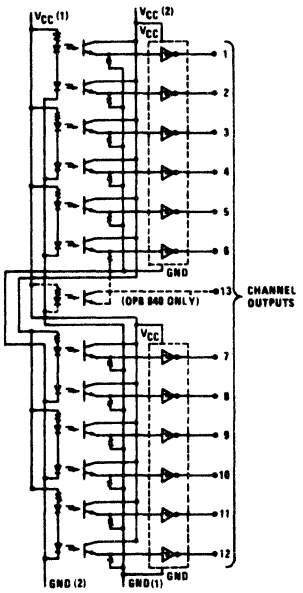

FA48 Reflex Detector

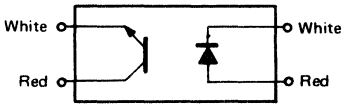

FA49 Optocoupler

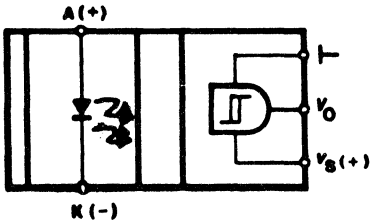

FA47 Emitter/Sensor Array W/Amplifier

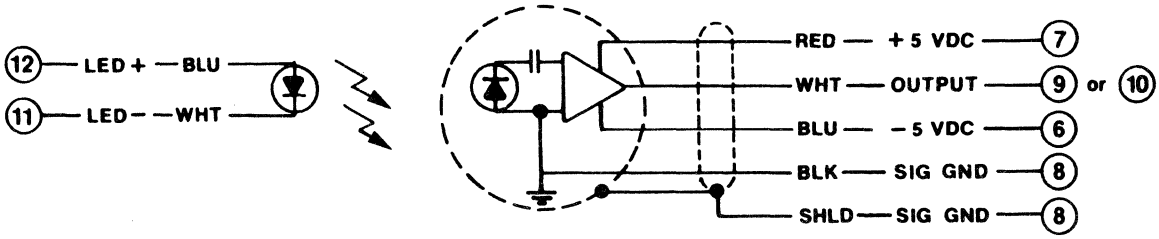

48. SCHEMATIC DRAWINGS

FA52 Reflective Sensor

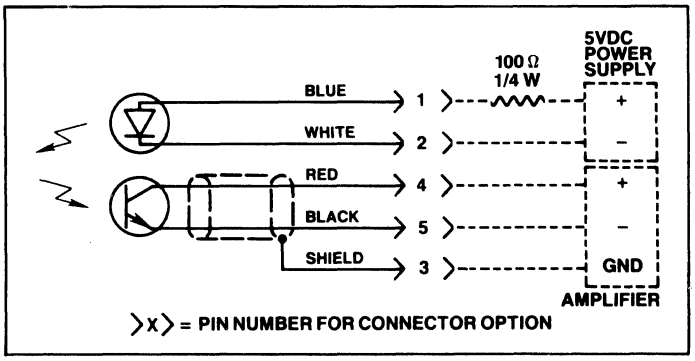

Resistor Values will vary with different types

FA55 Gap Detector w/Photocircuit

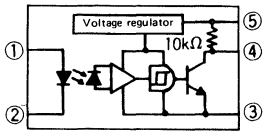

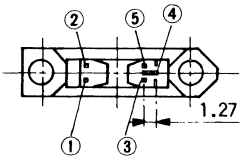

① Anode
② Cathode
③ GND
④ Vo
⑤ Vcc

FA77 Reflective Sensor

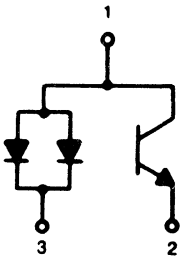

FA57 GAP Detector w/Photo Diode Sensor

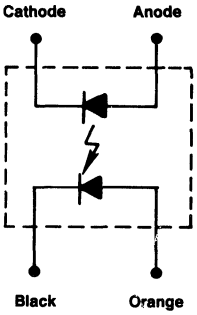

FA58 Gap Detector/Photo interrupter

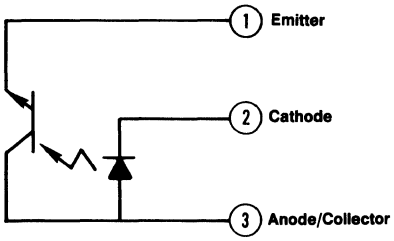

FA59 Reflex Detector/Photo Interrupter

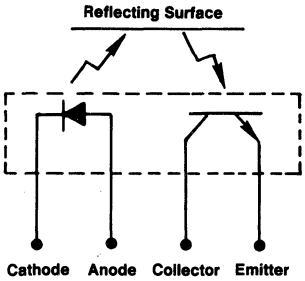

	Anode	Cathode	Emitter	Collector	Sensor Type
FA59	2	1	3	4	NPN
FA59a	2	1	3	4	NPN Darlington
FA59b	4	3	2	1	NPN
FA59c	4	3	2	1	NPN Darlington

See Chart for Pin Numbers

FA61 Reflective detector

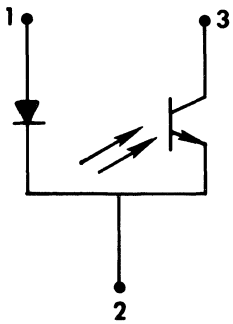

FA63 Photo-Reflective Sensor

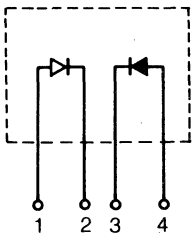

FA64 Photo-Reflective Sensor

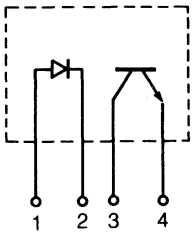

48. SCHEMATIC DRAWINGS

FA65 Dual Channel Gap Detector

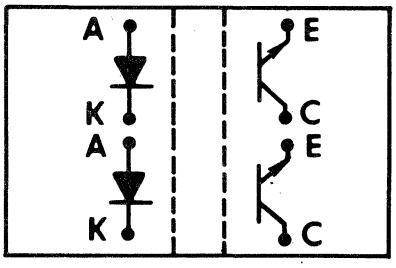

A dot indicates emitter side

FA66 Emitter/Detector Matchable Pair

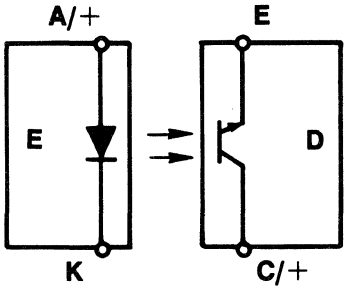

FA68 Slotted Optical SCR Switch

PIN 1. CATHODE
2. CATHODE
3. ANODE
4. GATE
5. ANODE

FA67 Dual Channel Slotted Optical Transistor Switch

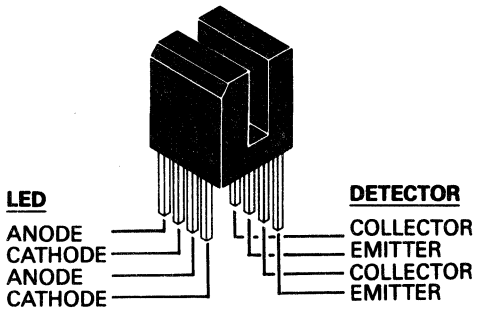

A dot indicates emitter side

FA69 Photo I.C. Optical Switch with .060" Aperture

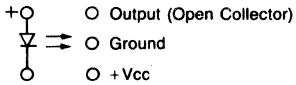

FA69a
Photo I.C. Optical Switch with .007" Aperture

FA69b
Photo I.C. Optical Switch with .035" Aperture

FA70 Dual Channel Photo I.C. Optical Switch with .010" Aperture

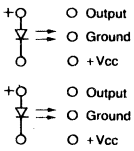

FA72 Gap Detector

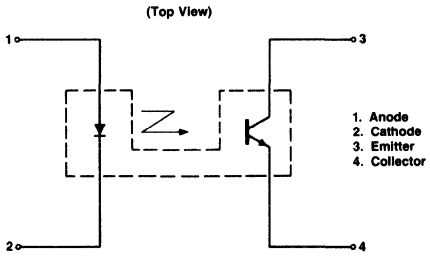

FA73 NOTE: Ignore pin numbers in FA 73a only.

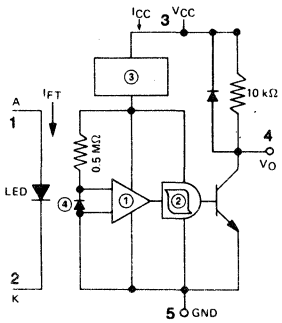

FA78 Reflective Sensor

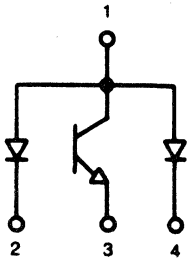

48. SCHEMATIC DRAWINGS

FA75 Detector/Interface System

(Bottom View)

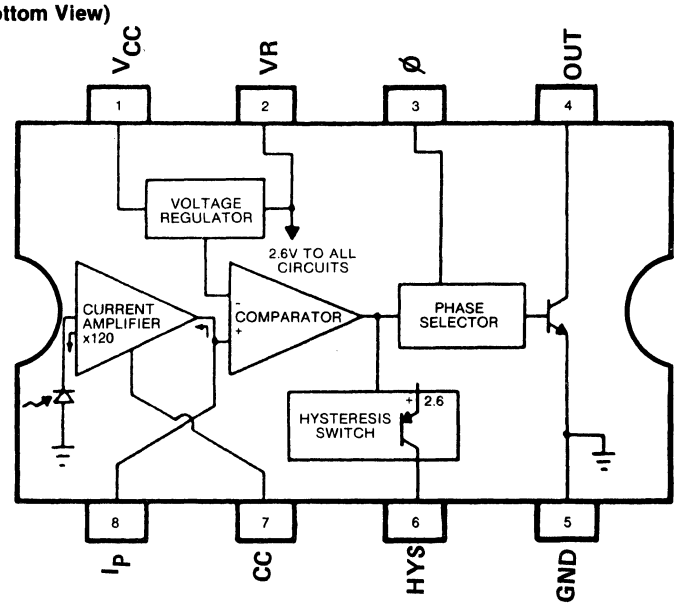

48. SCHEMATIC DRAWINGS

FB1 Fiber Optic Transmitter Driver

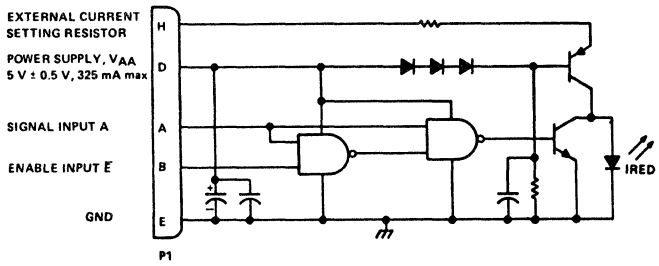

FB4 Optical Displacement Detector

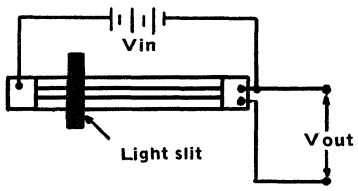

FB5 Photobridge for Displacement Detector

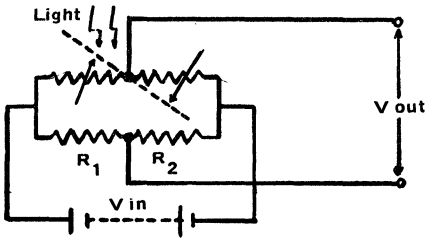

FB7 Image Sensor Array

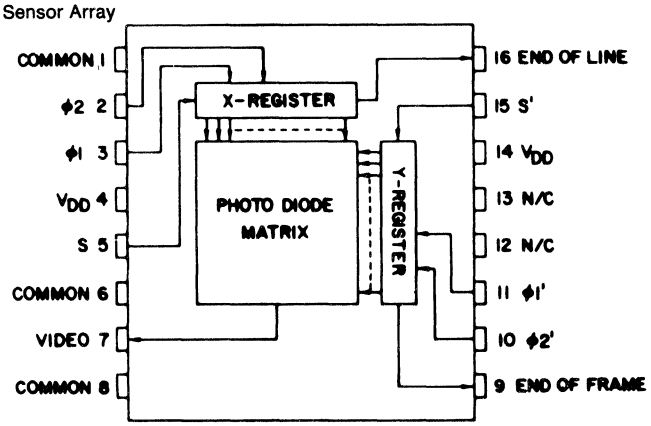

FB11 Optical Line Scanner

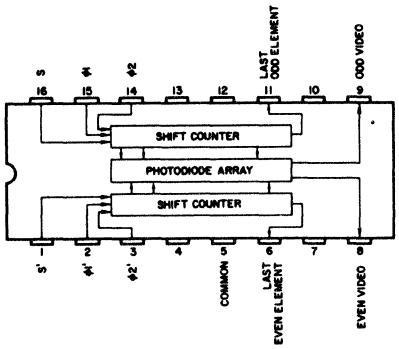

48. SCHEMATIC DRAWINGS

FB42 Injection Laser with Pulse/Driver

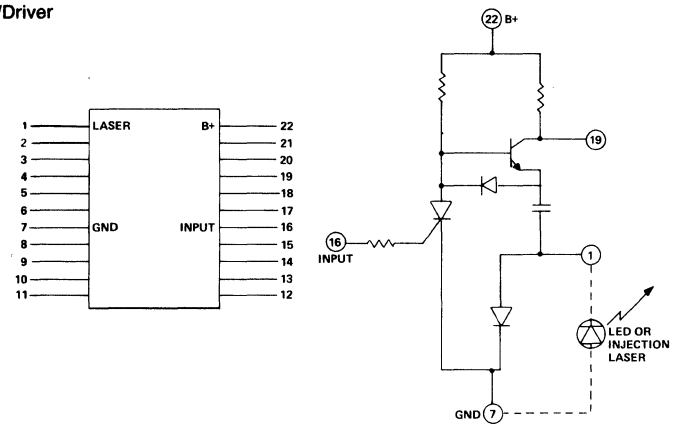

FB43 Transimpedance Amplifier

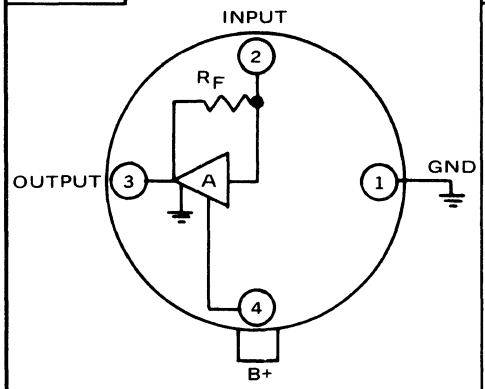

FB44 Infrared Transmitter (Output Stage)

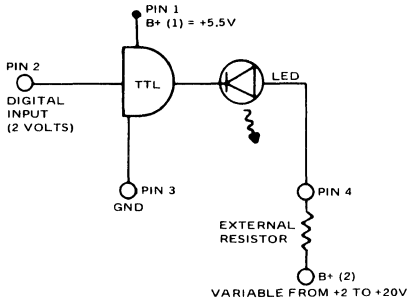

FB48 FET Transimpedence Amplifier

	N-ch. JFET	P-ch. MOSFET
1	S	D
2	D	G
3	G	+
4	–	S

FB48

FB49 Fiber Optic Data Link

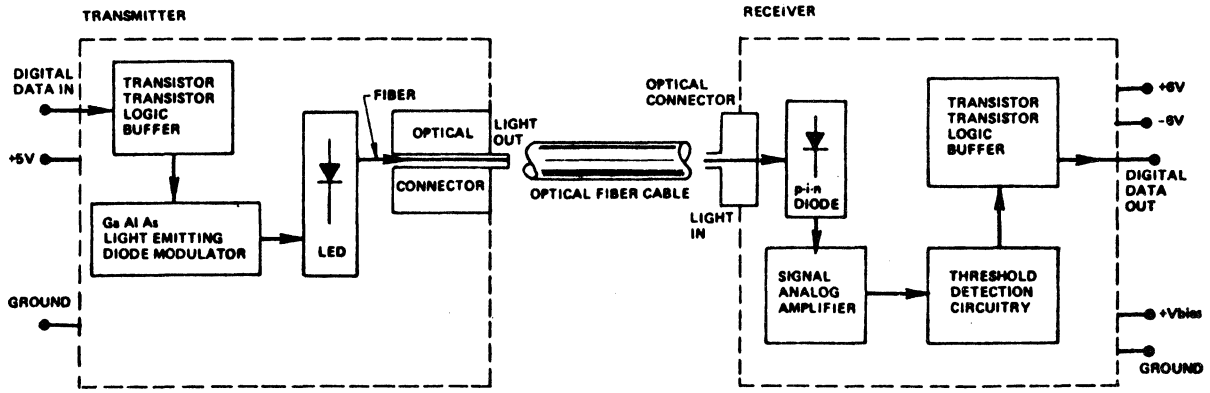

48. SCHEMATIC DRAWINGS

FB52 Photodiode Array Sensor

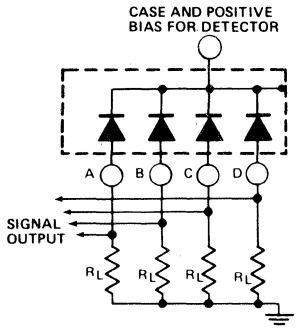

FB54 Photodiode Array Sensor

(BOTTOM VIEW)

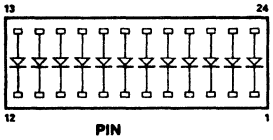

PIN		PIN	
1	CA 1	13	AN 12
2	CA 2	14	AN11
3	CA 3	15	AN 10
4	CA 4	16	AN 9
5	CA 5	17	AN 8
6	CA 6	18	AN 7
7	CA 7	19	AN 6
8	CA 8	20	AN 5
9	CA 9	21	AN 4
10	CA 10	22	AN 3
11	CA 11	23	AN 2
12	CA 12	24	AN 1

FB55 Transimpedence Amplifier

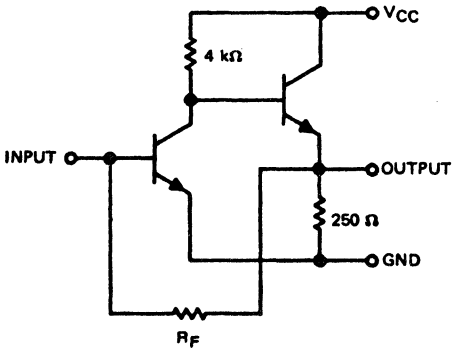

FB56 Line Scanner

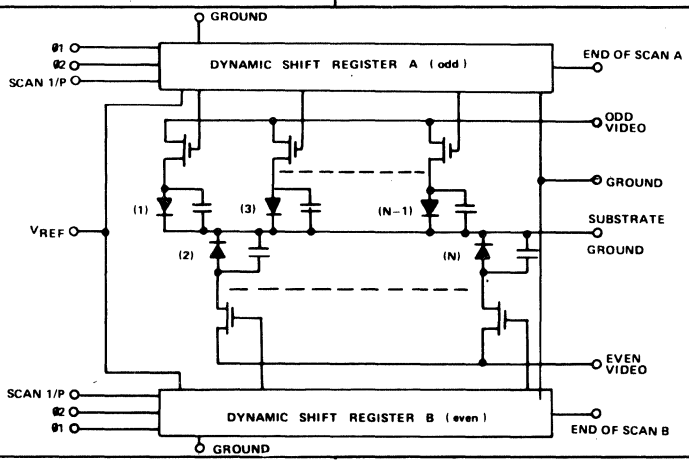

FB24 Injection Laser W/Charging Circuit and Driver

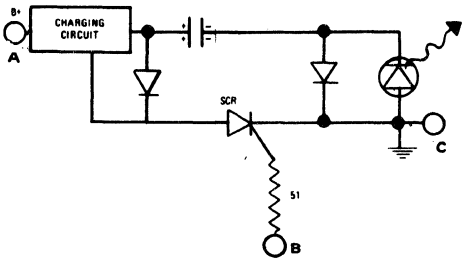

	A	B	C
FB24	PIN14	PIN8	PIN7
FB24a	PIN22	PIN16	PIN7
FB24b	PIN20	PIN14	PIN9

FB63 Voltage Supply for Diode Bias Circuit

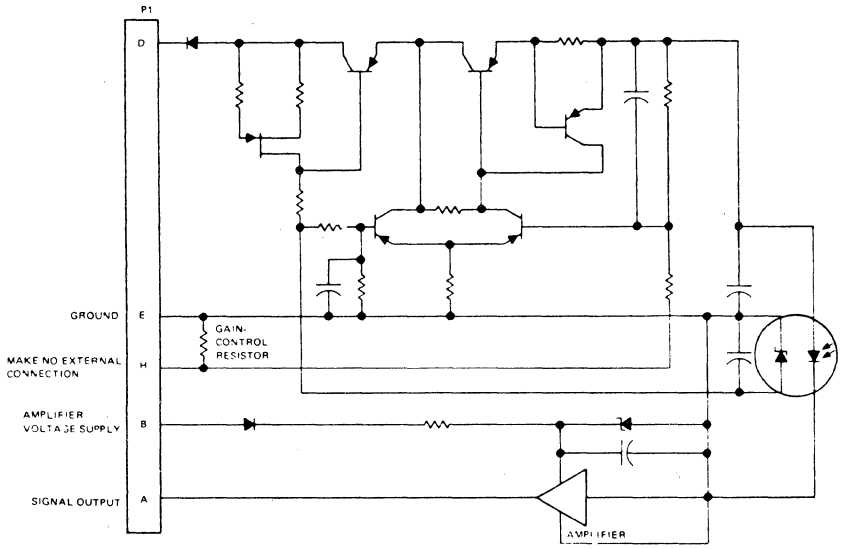

FB32 Charge Coupled Multi-Coupled Image Sensor

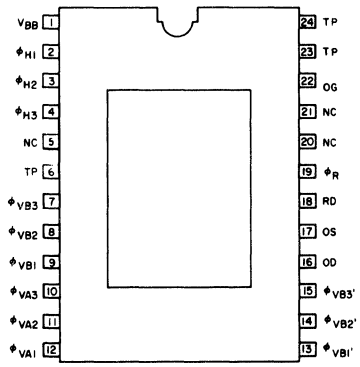

FB67 High Speed Infrared Emitter

pin 3 (case)

48. SCHEMATIC DRAWINGS

FB68 Temperature Stabilization Circuit

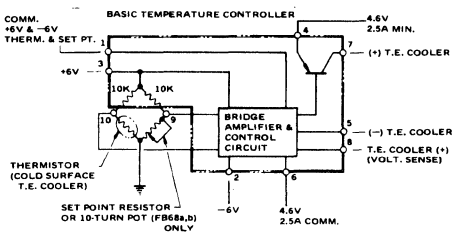

NOTES: THE FOLLOWING CUSTOMER FURNISHED POWER SUPPLIES ARE REQUIRED TO OPERATE FB68 AND FB68a.

A. FOR INPUT POWER TO PASS TRANSISTOR: +4 TO +6V @ 2.5 AMPS MIN. 100mV RIPPLE (MAX.)

B. FOR INPUT POWER TO AMPLIFIER AND CONTROL CIRCUIT: ±6V @ 25mAMPS AND 10mV RIPPLE (MAX.)

FB40 Circular Optical Scanner

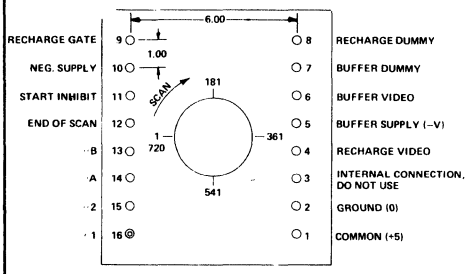

FB41 Transimpedance Amplifier

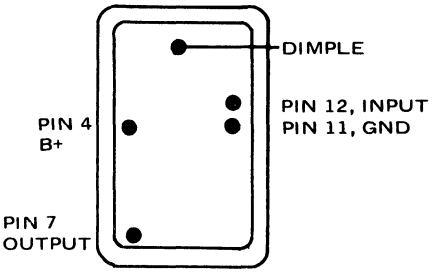

FB74 Fiber Optic Data Transmitter

PIN	FUNCTION
1	MODE SELECT
2	N.C.
3	GROUND
4	V_{CC}
5	DATA INPUT

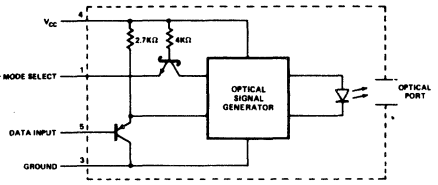

FB75 Fiber Optic Data Receiver

1	TEST POINT
2	LINK MONITOR
3	GROUND
4	V_{CC}
5	DATA OUTPUT

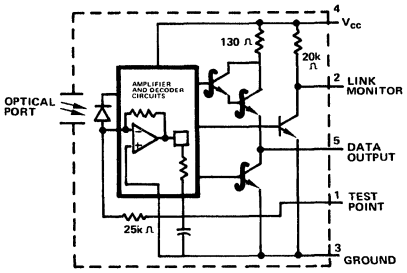

FB76 10-Segment Bar Graph Display

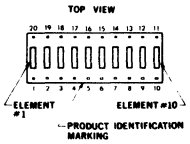

PIN	FUNCTION	PIN	FUNCTION
1	ANODE 1	11	CATHODE 10
2	ANODE 2	12	CATHODE 9
3	ANODE 3	13	CATHODE 8
4	ANODE 4	14	CATHODE 7
5	ANODE 5	15	CATHODE 6
6	ANODE 6	16	CATHODE 5
7	ANODE 7	17	CATHODE 4
8	ANODE 8	18	CATHODE 3
9	ANODE 9	19	CATHODE 2
10	ANODE 10	20	CATHODE 1

FB79 5-Segment Bar Graph Display

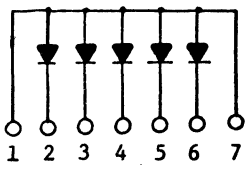

FB80 10-Step Bar Graph Display

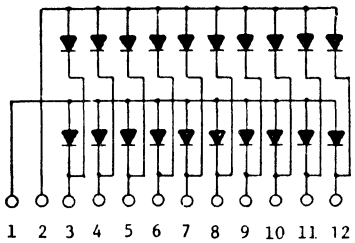

FB81 10-Segment Bar Graph Display

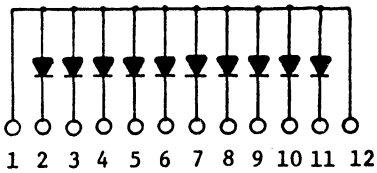

FB82 15-Segment 2-Channel Bar Display

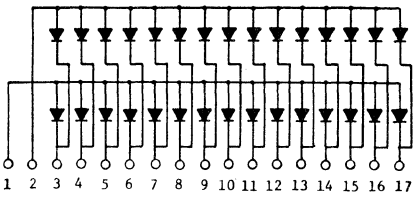

FB83 20-Segment Multi-color Dual-Channel Bar Display

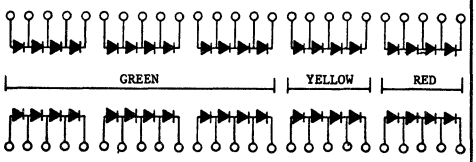

FB84 Bar Graph Display

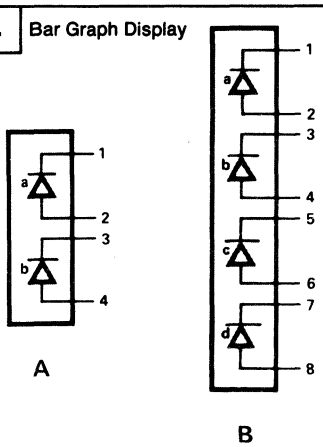

48. SCHEMATIC DRAWINGS

FB85 Fiber Optic Detector/Preamp

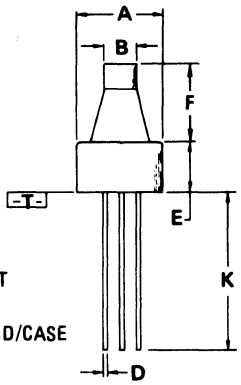

STYLE 2:
PIN 1. OUTPUT
2. V_{CC}
3. GROUND/CASE

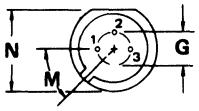

FB86 Sensor Array

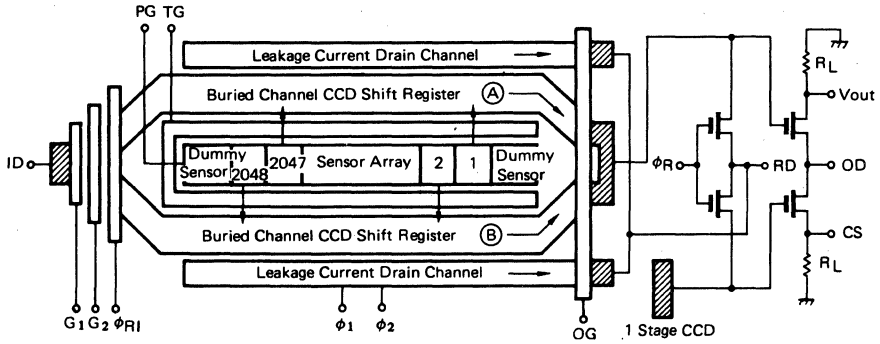

ID: Input diode,
PG: Photogate,
OG: Output gate,
CCD: Shift register,
A1 cover

G_1, G_2, ϕ_{RI}: Input gates,
TG: Transfer gate.
A, B: Buried channels.

FB89 Numeric Display W/Control Logic

PIN 1 LATCH OUTPUT Q_B (BINARY WEIGHT 2)
PIN 2 LATCH OUTPUT Q_C (BINARY WEIGHT 4)
PIN 3 LATCH OUTPUT Q_D (BINARY WEIGHT 8)
PIN 4 LATCH OUTPUT Q_A (BINARY WEIGHT 1)
PIN 5 LATCH STROBE INPUT
PIN 6 LATCH DATA INPUT C (BINARY WEIGHT 4)
PIN 7 LATCH DATA INPUT D (BINARY WEIGHT 8)
PIN 8 GROUND
PIN 9 NO INTERNAL CONNECTION
PIN 10 LATCH DATA INPUT B (BINARY WEIGHT 2)
PIN 11 BLANKING INPUT
PIN 12 LATCH DATA INPUT DP
PIN 13 LED TEST
PIN 14 LATCH OUTPUT DP
PIN 15 LATCH DATA INPUT A (BINARY WEIGHT 1)
PIN 16 SUPPLY VOLTAGE, V_{CC}

FB88 Numeric Display W/Control Logic

PIN 1 LATCH OUTPUT Q_B (BINARY WEIGHT 2)
PIN 2 LATCH OUTPUT Q_C (BINARY WEIGHT 4)
PIN 3 LATCH OUTPUT Q_D (BINARY WEIGHT 8)
PIN 4 LATCH OUTPUT Q_A (BINARY WEIGHT 1)
PIN 5 LATCH STROBE INPUT
PIN 6 RIPPLE-BLANKING INPUT
PIN 7 MAXIMUM-COUNT OUTPUT
PIN 8 GROUND
PIN 9 PARALLEL COUNT ENABLE INPUT
PIN 10 SERIAL COUNT ENABLE INPUT
PIN 11 RIPPLE-BLANKING OUTPUT
PIN 12 CLEAR INPUT
PIN 13 DECIMAL POINT INPUT
PIN 14 BLANKING INPUT
PIN 15 CLOCK INPUT
PIN 16 SUPPLY VOLTAGE, V_{CC}

FB179 Electro-Optical Sensor System w/Emitter and Detector Support Circuitry

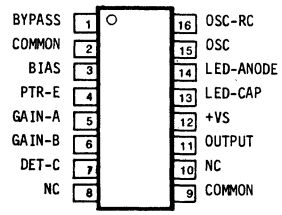

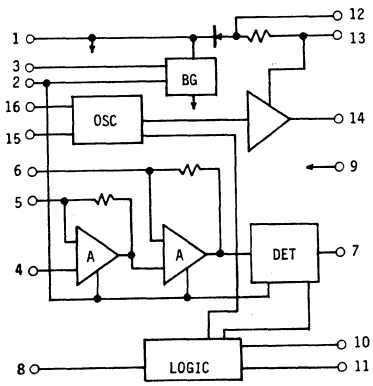

FB90 Numeric Display W/Control Logic

PIN 1 LED SUPPLY VOLTAGE
PIN 2 LATCH DATA INPUT B
PIN 3 LATCH DATA INPUT A
PIN 4 LEFT DECIMAL POINT CATHODE
PIN 5 LATCH STROBE INPUT (NO INTERNAL CONNECTION FOR EA7a)
PIN 6 OMITTED (LATCH STROBE INPUT FOR EA7a)
PIN 7 COMMON GROUND
PIN 8 BLANKING INPUT
PIN 9 OMITTED (NO INTERNAL CONNECTION FOR EA7a)
PIN 10 RIGHT DECIMAL POINT CATHODE
PIN 11 OMITTED (NO INTERNAL CONNECTION FOR EA7a)
PIN 12 LATCH DATA INPUT D
PIN 13 LATCH DATA INPUT C
PIN 14 LOGIC SUPPLY VOLTAGE, V_{CC}

48. SCHEMATIC DRAWINGS

FB93 Opto-Controller W/Relay

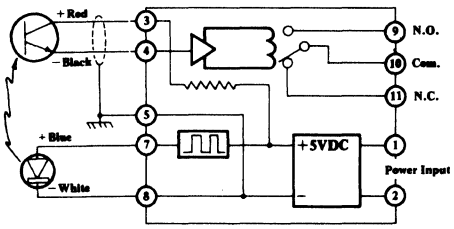

FB182 Emitter w/integrated Detector for Reflex applications

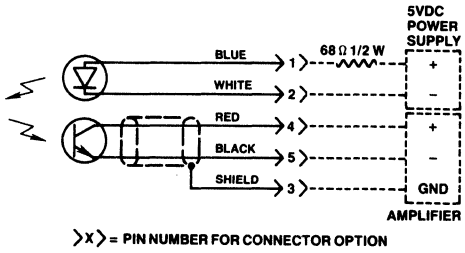

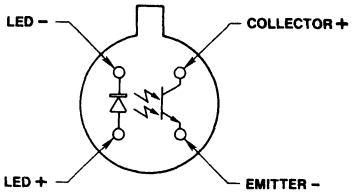

BOTTOM VIEW

Resistor Values may Vary with different devices

FB99 Fiber Optic Transmitter Module

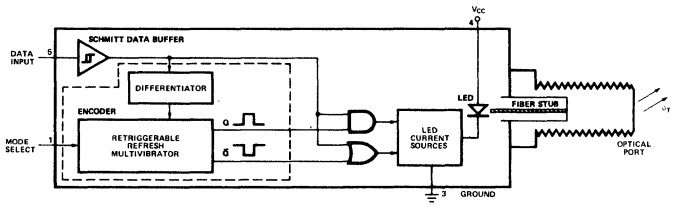

FB98 Multi-Element Light Display

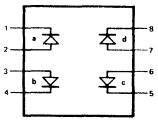

A,B

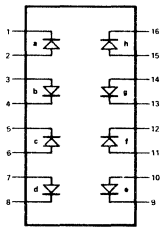

C,D,E,F

PIN	FUNCTION A, B	FUNCTION C, D, E, F
1	CATHODE a	CATHODE a
2	ANODE a	ANODE a
3	ANODE b	ANODE b
4	CATHODE b	CATHODE b
5	CATHODE c	CATHODE c
6	ANODE c	ANODE c
7	ANODE d	ANODE d
8	CATHODE d	CATHODE d
9		CATHODE e
10		ANODE e
11		ANODE f
12		CATHODE f
13		CATHODE g
14		ANODE g
15		ANODE h
16		CATHODE h

FB102 Fiber Optic Analog Transmitter

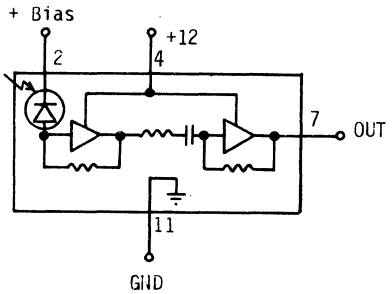

FB101 Remote Control Optical Transceiver

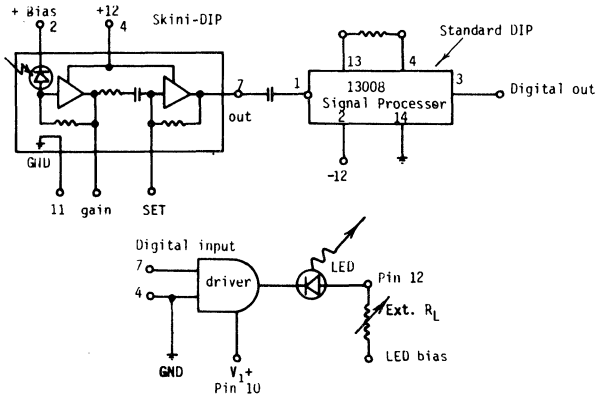

FB103 10-Element Display W/Logic

PIN	ELECTRICAL CONNECTION
1	V_{LED}
2	LED 1
3	GND
4	V+
5	R_{LO}
6	Signal In
7	R_{HI}
8	Reference Out
9	Reference Adjust
10	Mode
11	LED 9
12	LED 10

FB104 4-Digit Display W/Logic

Pin	Electrical Connection
1	External LED 1
2	External LED 2
3	Enable In
4	Data In
5	Clock In
6	V_{DD}
7	Brightness Control
8	Gnd
9	V_{LED}

FB108 Photodiode W/Preamp

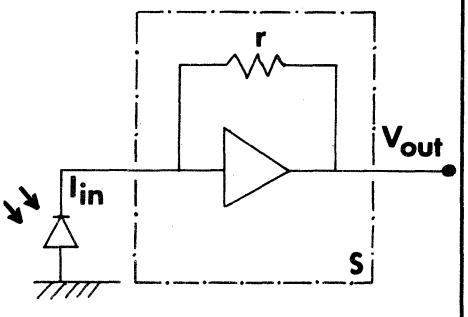

48. SCHEMATIC DRAWINGS

FB113 Alphanumeric Display Controller

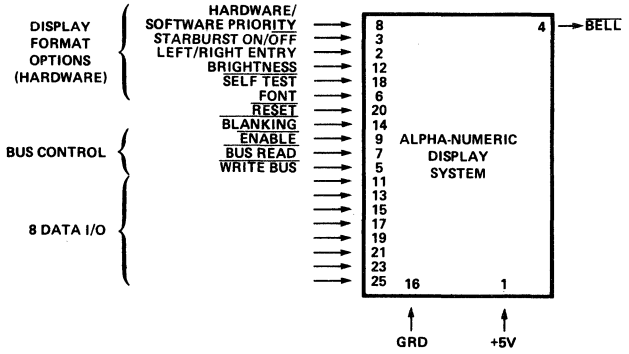

FB112 Photodiode W/Preamp

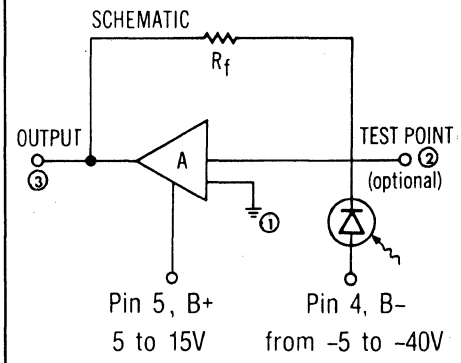

FB125 Quadrant-Detector Photodiode

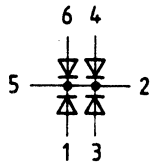

FB114 Alphanumeric Display Controller

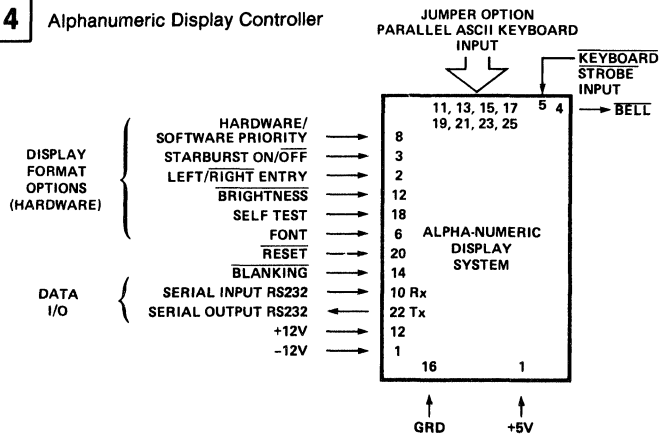

FB109 Fiber Optic Data Link Controller

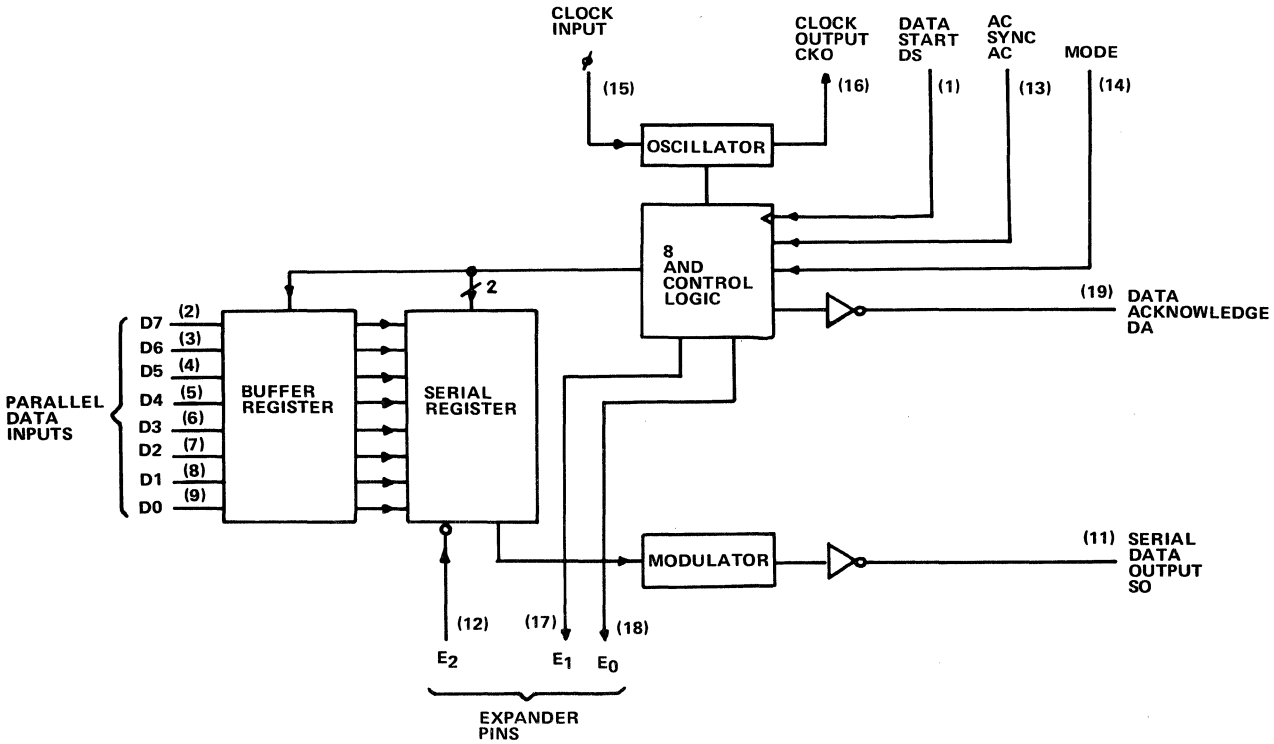

48. SCHEMATIC DRAWINGS

FB110 Fiber Optic Receiver

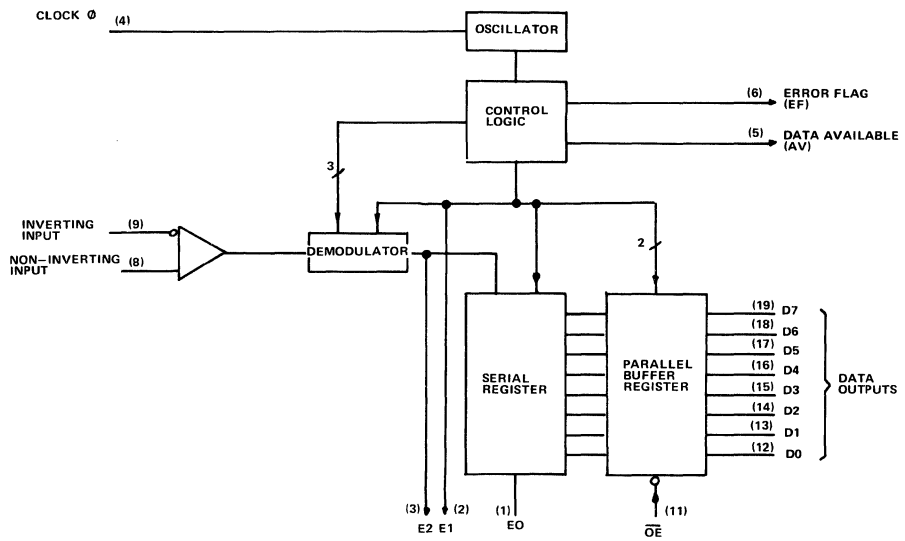

FB128 Multi-Color Bar Graph Display

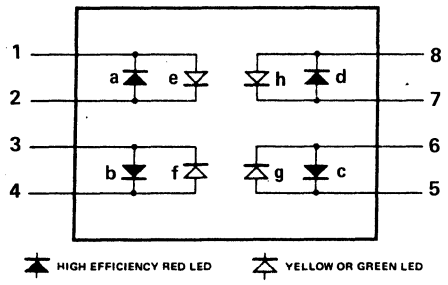

PN/NO	HER/I Y/G
1	Ka A, An E
2	An A, Ka E
3	An B, Ka F
4	Ka B, An F
5	Ka C, Ang
6	An C, Ka G
7	An D, Ka H
8	Ka D, An H

FB119 Laser Diode Receiver/Detector

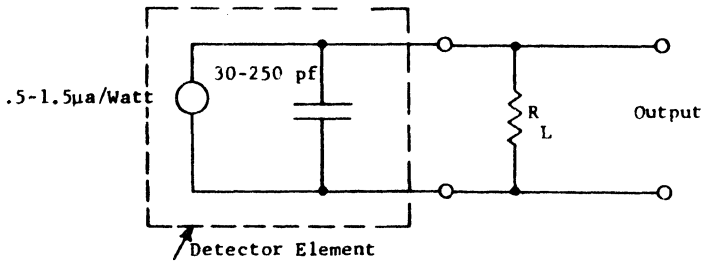

Schematic diagram of Laser detector.

FB138

PIN ASSIGNMENTS

7. + 5 volts
8. Strobe
13. Data input
15. Ground

All other pins have no internal connections.

FB123 Analog Optical Transmitter

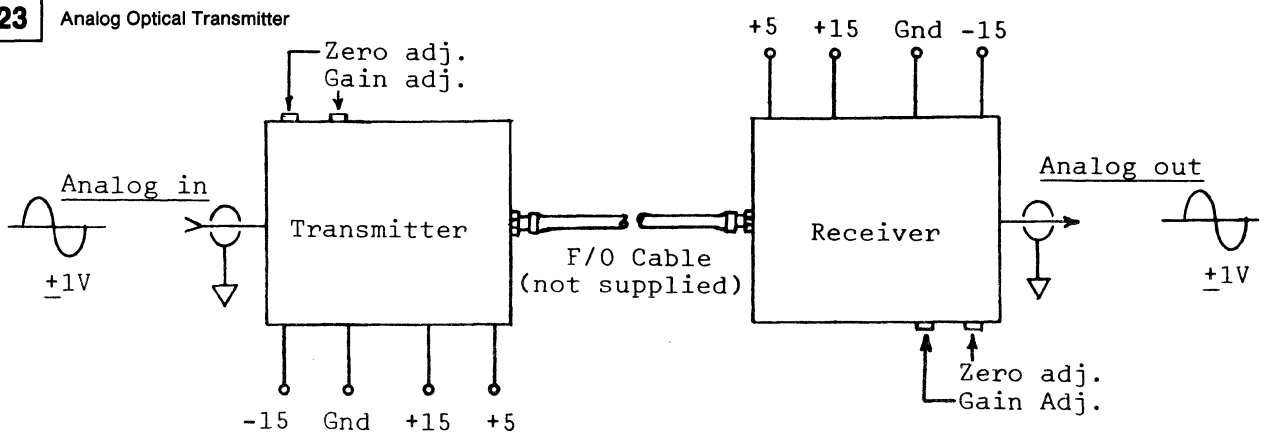

48. SCHEMATIC DRAWINGS

FB129 101-Element Linear Display Array

PIN LOCATION	FUNCTION
1	CO
2	A4
3	C'
4	No Pin
5	C10
6	A1
7	A8
8	No Pin
9	C20
10	No Pin
11	A' (5)
12	No Pin
13	C30
14	No Pin
15	A7
16	No Pin
17	C40
18	No Pin
19	A2
20	No Pin
21	C50
22	No Pin
23	A3
24	No Pin
25	C60
26	No Pin
27	A10
28	No Pin
29	C70
30	No Pin
31	A9
32	No Pin
33	C80
34	A5
35	A6
36	No Pin
37	C90

FB131 Differential LED DPM W/Data Outputs

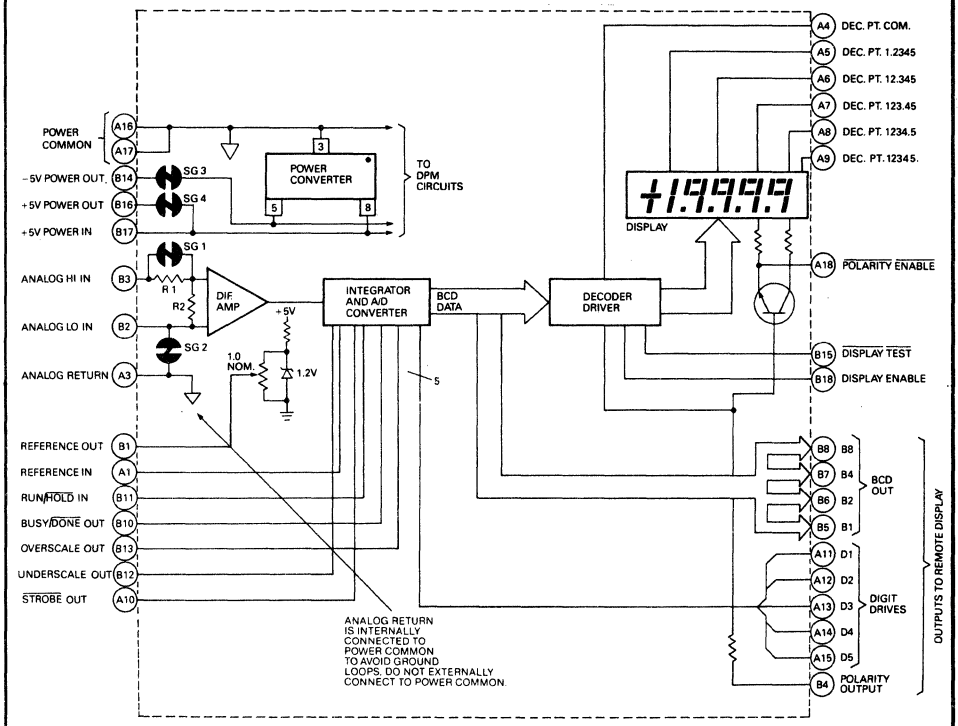

FB132 Differential DPM W/Data Outputs

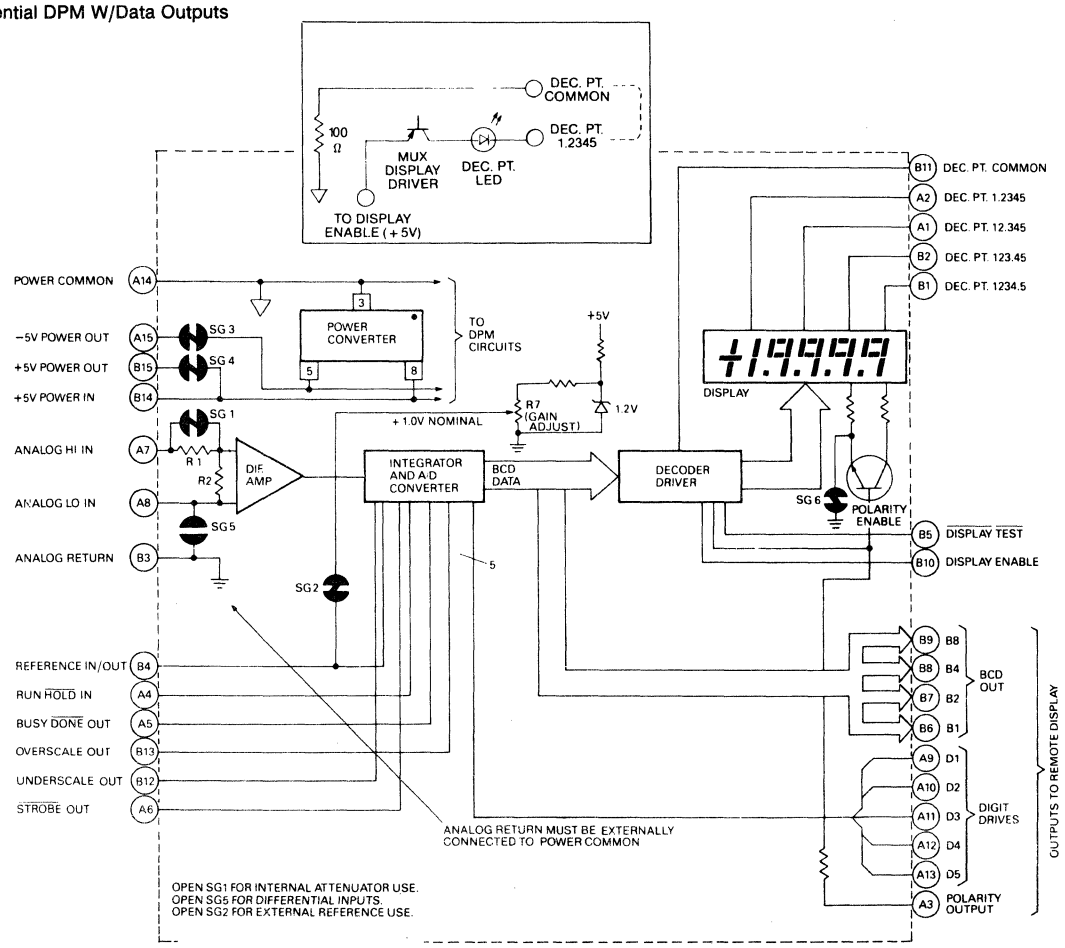

48. SCHEMATIC DRAWINGS

FB133 Differential LCD DPM W/Data Outputs

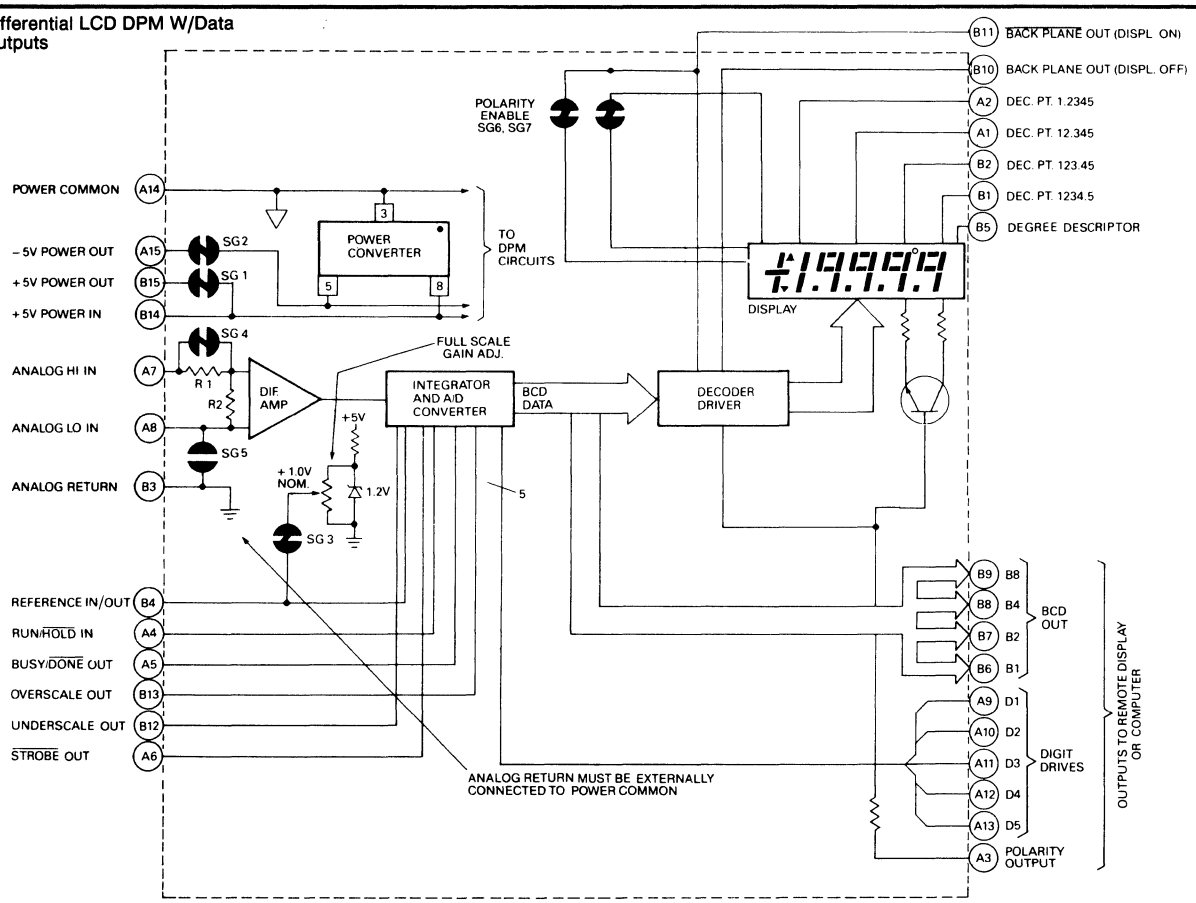

FB134 LED Bar Display W/Driver and Control

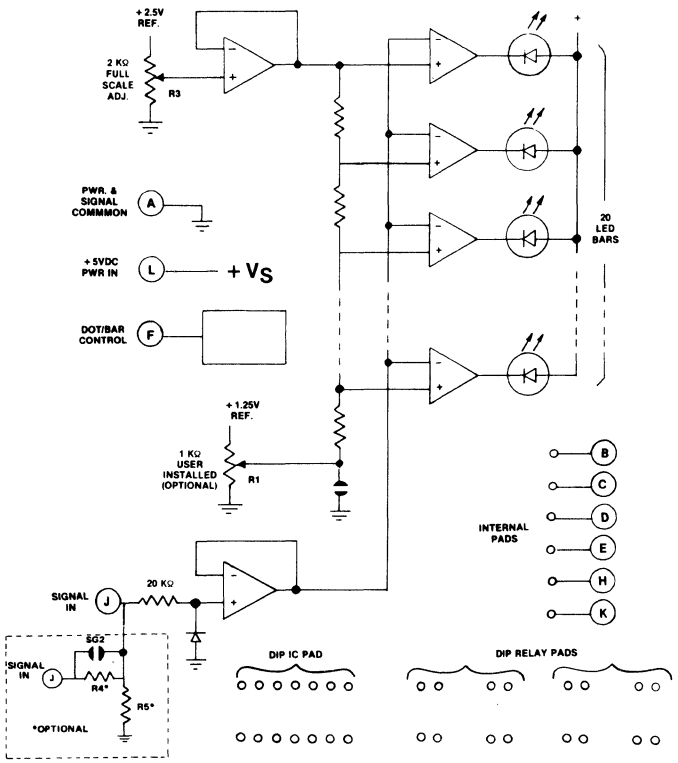

FB204 4 Digit, 16 Segment Intelligent Display

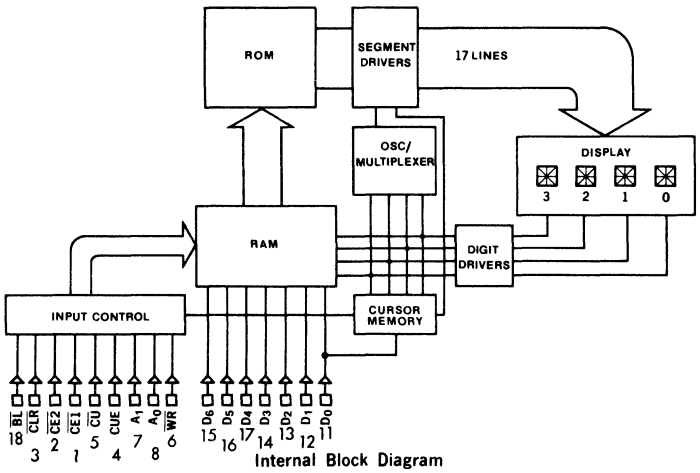

Internal Block Diagram

VCC – Pin 9
GND – Pin 10

48. SCHEMATIC DRAWINGS

FB212 Frame Transfer Sensor

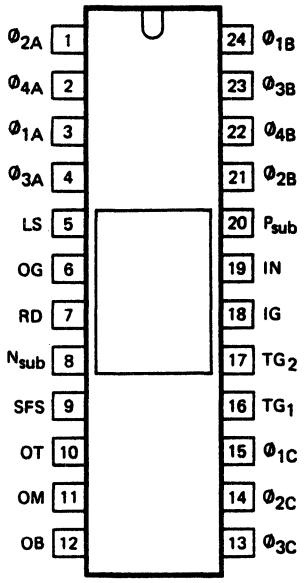

PIN DESCRIPTION

pin no.	symbol	name and function
20	P_{sub}	P-substrate
8	N_{sub}	N-substrate
3	$Ø_{1A}$	vertical transfer clocks for image part
1	$Ø_{2A}$	
4	$Ø_{3A}$	
2	$Ø_{4A}$	
24	$Ø_{1B}$	vertical transfer clocks for storage part
21	$Ø_{2B}$	
23	$Ø_{3B}$	
22	$Ø_{4B}$	
15	$Ø_{1C}$	horizontal transfer clock output register
14	$Ø_{2C}$	
13	$Ø_{3C}$	
16	TG_1	transfer gates
17	TG_2	
6	OG	output gate
18	IG	input gate
19	IN	input diffusion
5	LS	light shield
9	SFS	source follower source
10	OT	output top
11	OM	output middle
12	OB	output bottom
7	RD	drain reset transistor

FB211 Incremental Optical Encoder

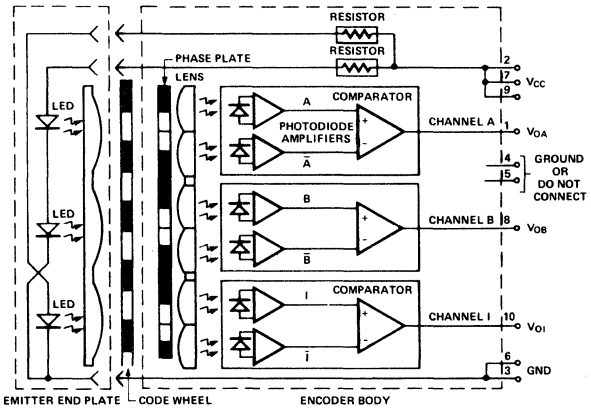

FB139 10-Segment Stackable Bar Display

PIN CONNECTIONS

PIN NO.	ELECTRICAL CONNECTIONS	PIN NO.	ELECTRICAL CONNECTIONS	PIN NO.	ELECTRICAL CONNECTIONS	PIN NO.	ELECTRICAL CONNECTIONS
1	Bar 1 Anode	6	Bar 6 Anode	11	Bar 10 Cathode	16	Bar 5 Cathode
2	Bar 2 Anode	7	Bar 7 Anode	12	Bar 9 Cathode	17	Bar 4 Cathode
3	Bar 3 Anode	8	Bar 8 Anode	13	Bar 8 Cathode	18	Bar 3 Cathode
4	Bar 4 Anode	9	Bar 9 Anode	14	Bar 7 Cathode	19	Bar 2 Cathode
5	Bar 5 Anode	10	Bar 10 Anode	15	Bar 6 Cathode	20	Bar 1 Cathode

48. SCHEMATIC DRAWINGS

FB140 Infrared Transmitter Output Driver

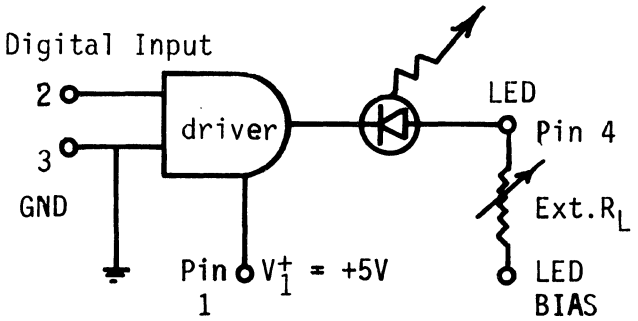

FB141 16-Element Line Scanner

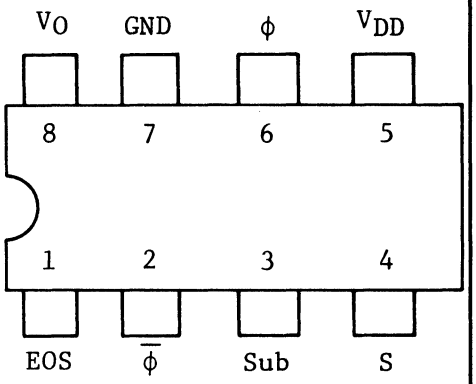

FB142 64-Element Line Scanner

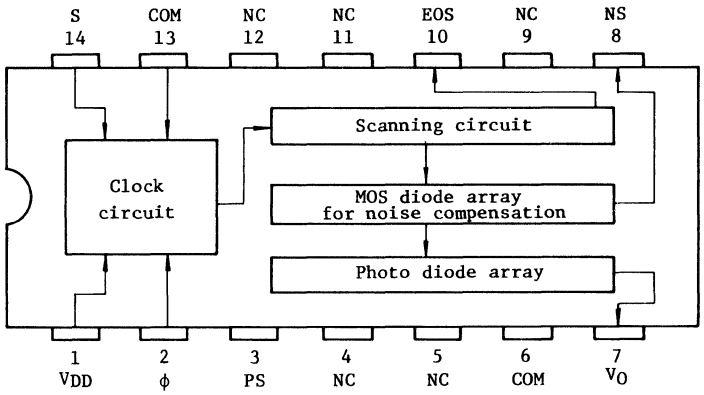

FB143 128-Element Line Scanner

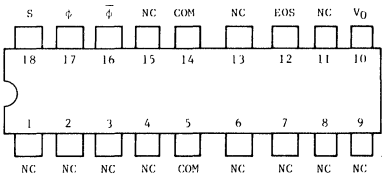

Nc : No Connection

COM	Positive potential	EOS	End of scan output
S	Start pulse input	V_O	Video output
ϕ, $\overline{\phi}$	Clock pulse input		

FB144 256-Element Line Scanner

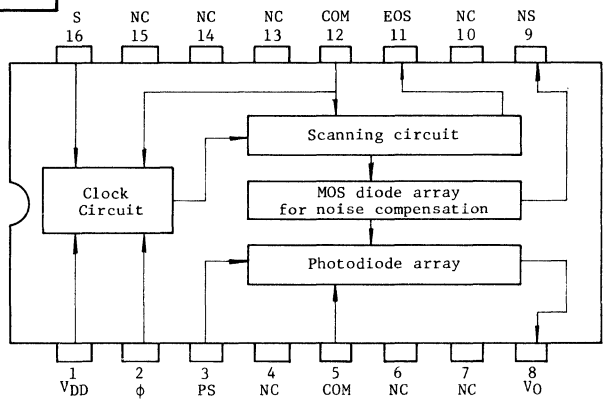

FB146 Digital Image Sensor

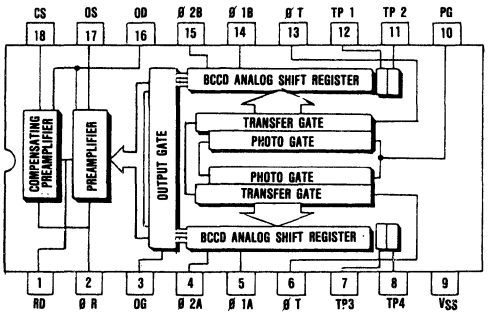

FB145 512-Element Line Scanner

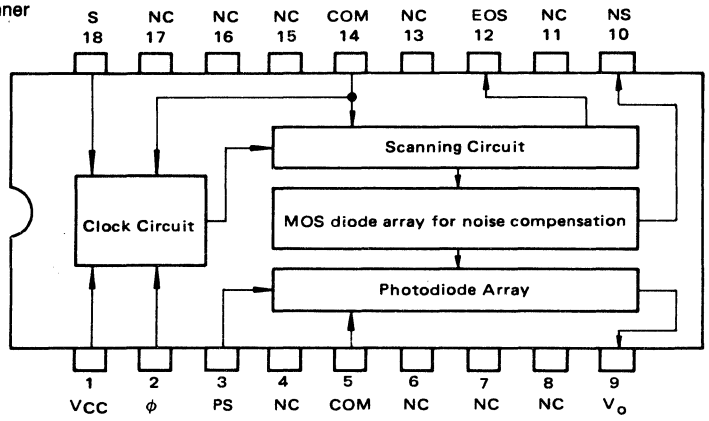

48. SCHEMATIC DRAWINGS

FB147 1024-Line Scanner

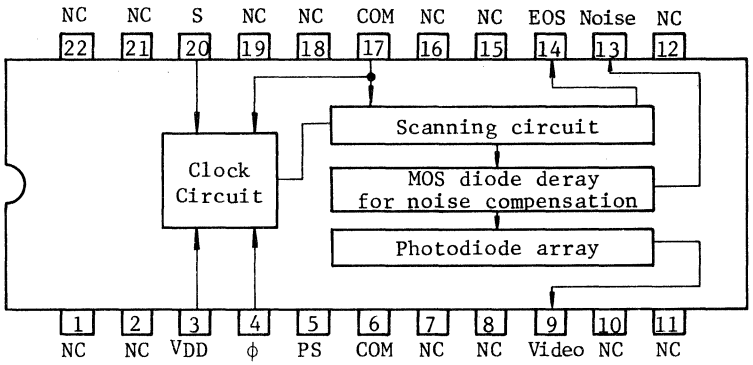

FB148 256-Element Line Scanner

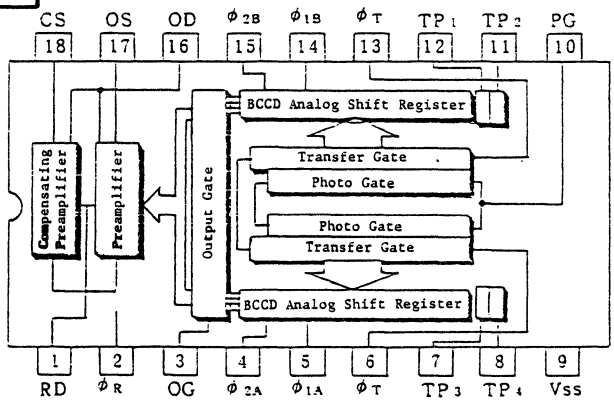

FB149 2k-Element Line Scanner

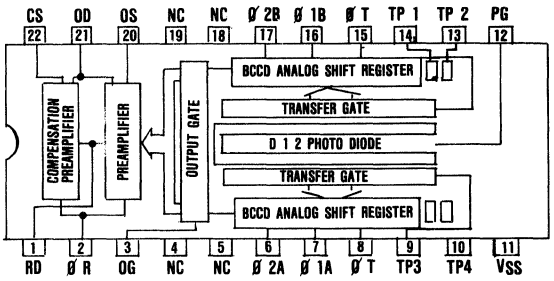

FB150 Dual-Axis Photodetector Array

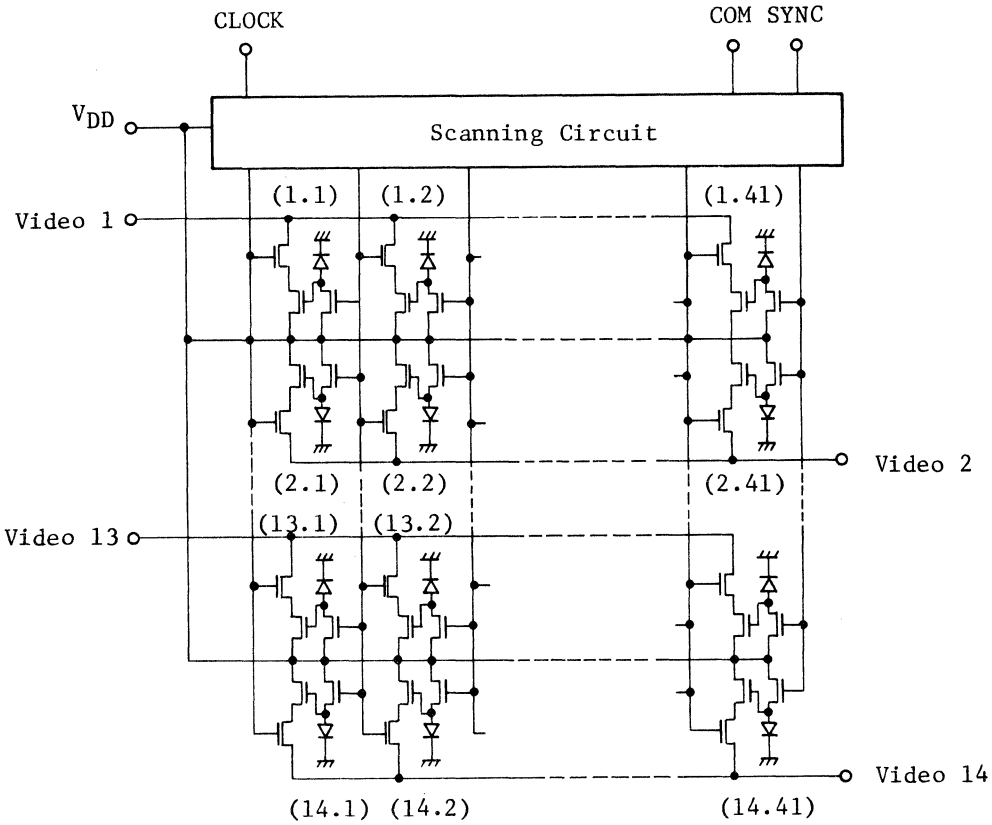

48. SCHEMATIC DRAWINGS

FB151 4k-Bit Charge Coupled Image Sensor

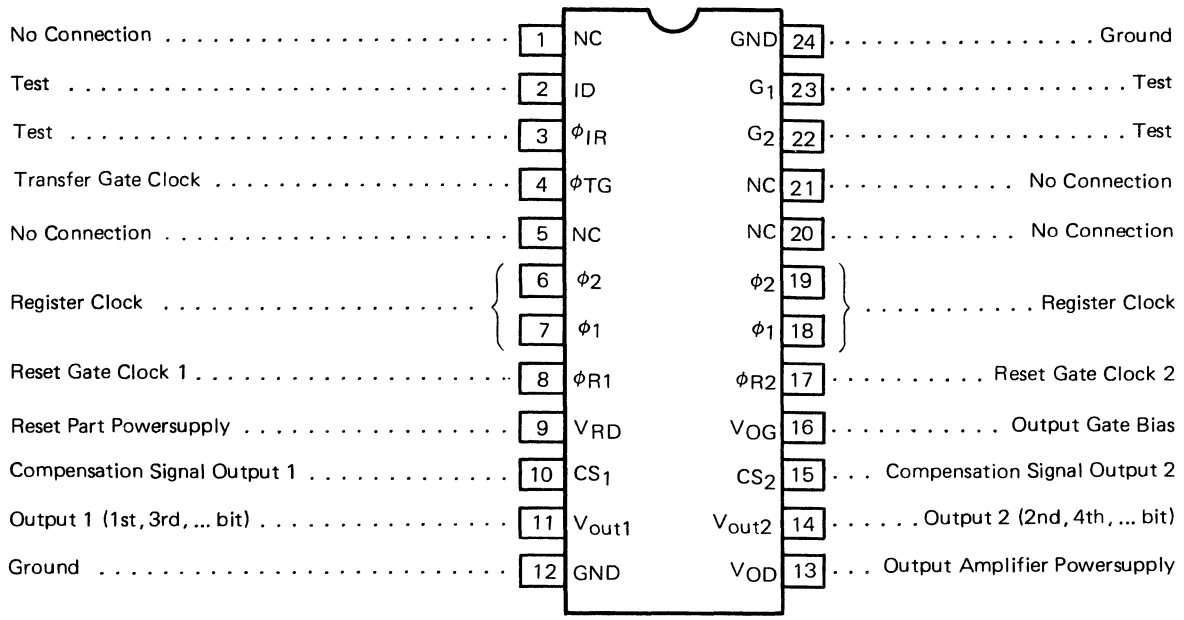

FB152 1k-Bit Charge Coupled Image Sensor

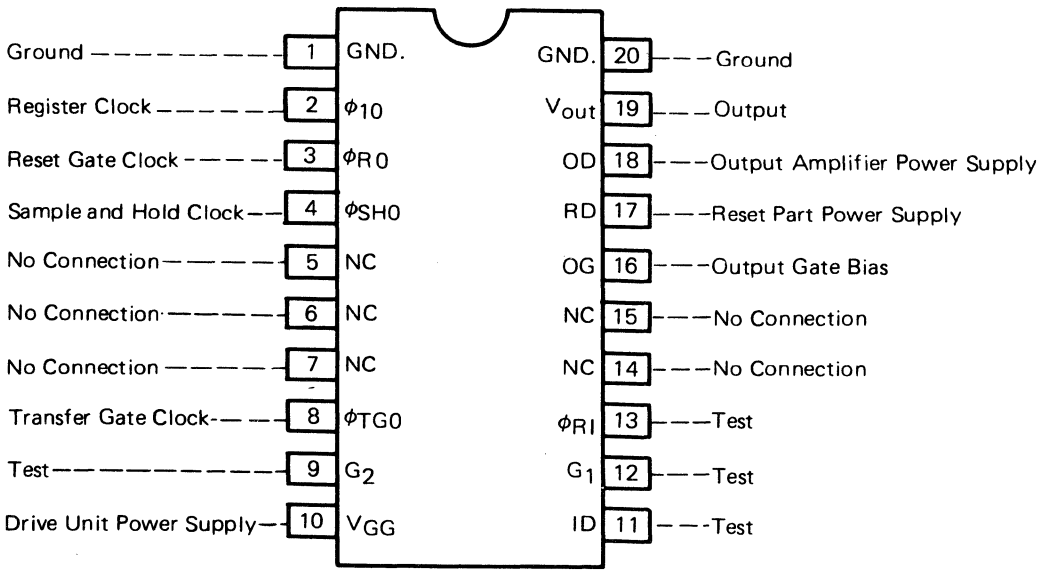

48. SCHEMATIC DRAWINGS

FB153 2k-Bit Charge Coupled Image Sensor

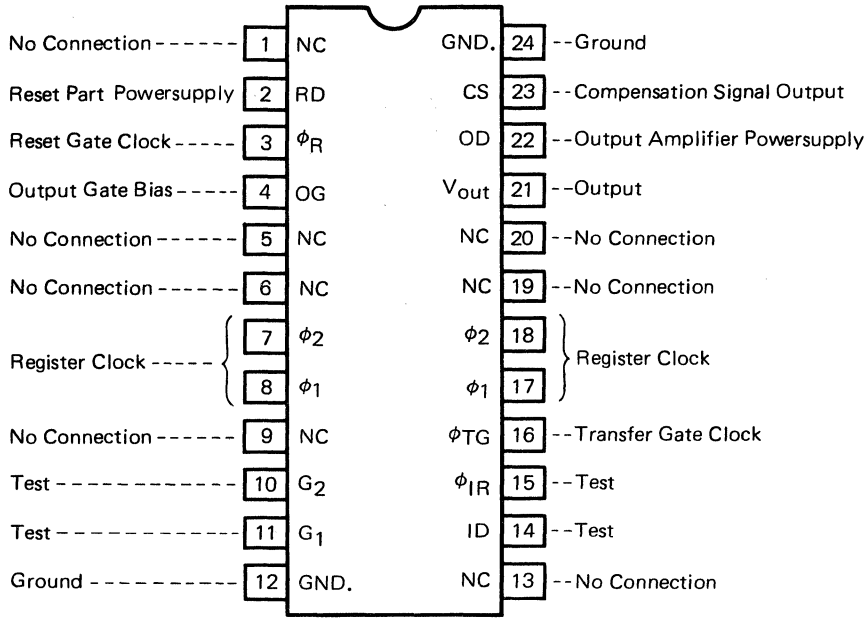

FB154 Reflective Object Sensor

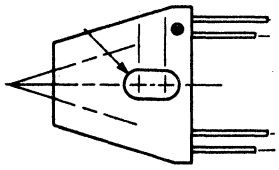

FB155 LED Reflective Scanner

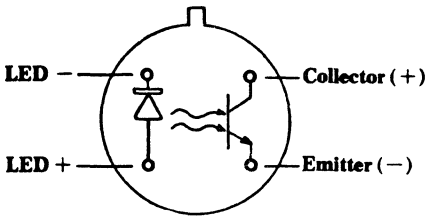

FB156 Fiber Optic Scanner With Preamp

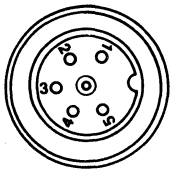

PIN	CONNECTION
1	+5VDC
2	Ground
3	Not Used
4	Not Used
5	Open Collector Output

FB137 Fiber Optic Receiver Module

PIN ASSIGNMENTS

7. +12 volts
8. −12 volts
9. +5 volts
10. Q output
11. $\bar{Q}$ output
12. Ground
13. Symmetry adjustment pot. (wiper)
14. Normal reference
15. High power reference

All other pins have no connections.

FB157 Data Output Module

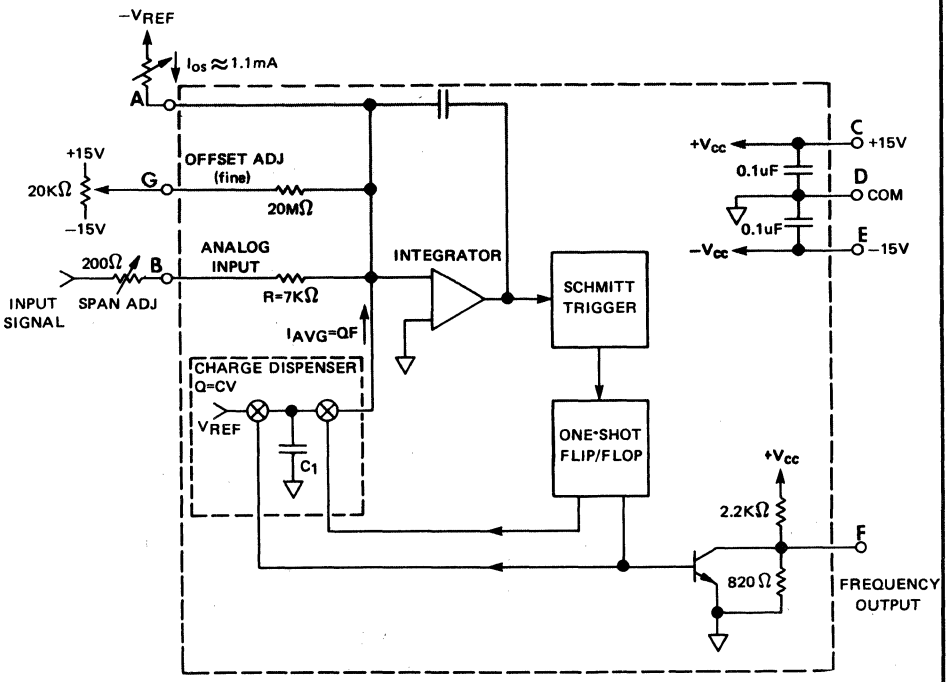

48. SCHEMATIC DRAWINGS

FB158 Data Input Module

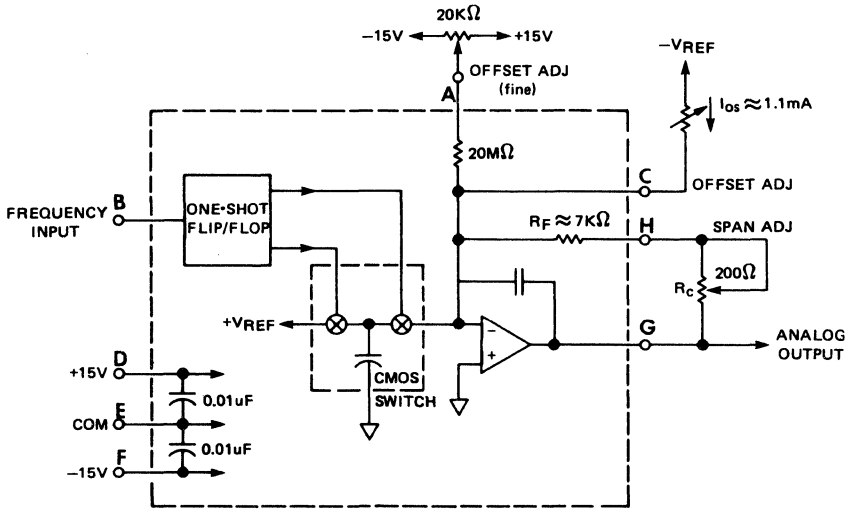

FB159 Infrared Detector

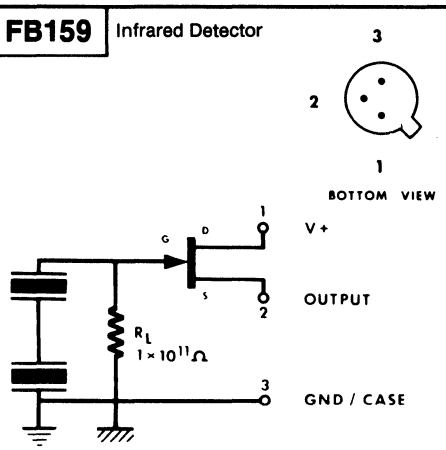

FB160 Photoresistive Position Sensor

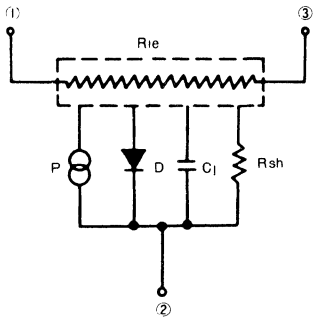

FB161 Photoresistive Position Sensor

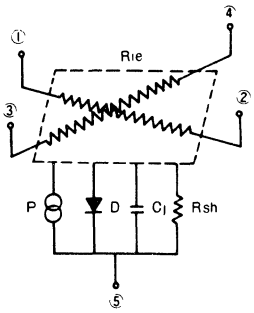

FB162 Photoresistive Position Sensor

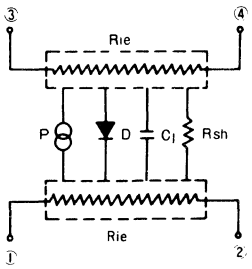

FB166 Image Sensor Array

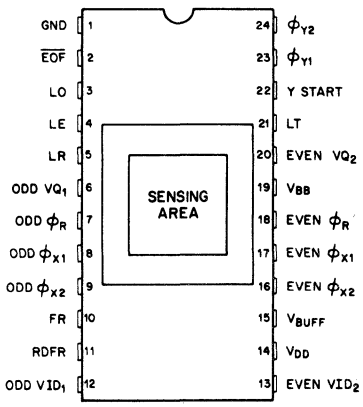

FB164 Integrated Detector/Preamp

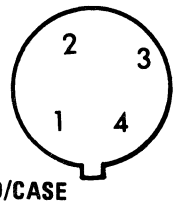

PIN 1. $-V_{out}$

PIN 2. $+V_{out}$

PIN 3. GROUND/CASE

PIN 4. $+V_{cc}$

FB165 High Power AlGaAs LED

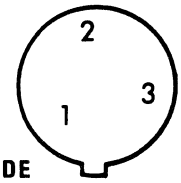

PIN 1–ANODE
PIN 2–CATHODE
PIN 3–CASE

48. SCHEMATIC DRAWINGS

FB167 Image Sensor Array

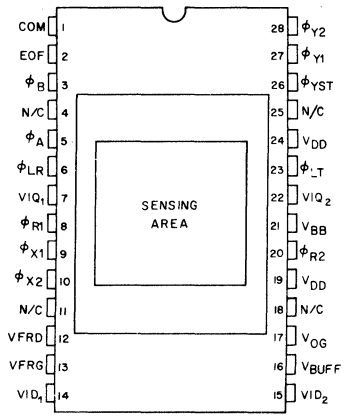

FB168 Image Sensor Array

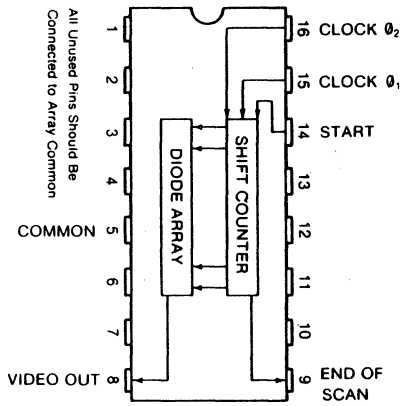

FB169 Wide Aperture Array

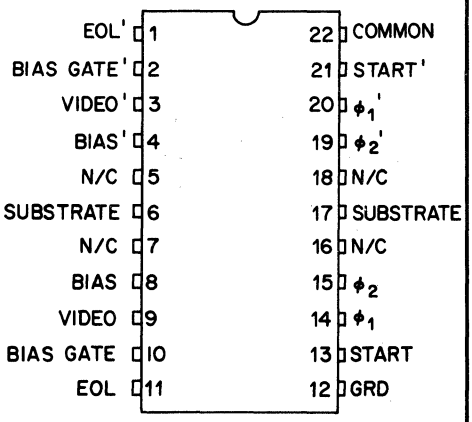

FB170 Hybrid Optical Receiver

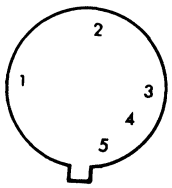

1 GND
2 NC
3 OUTPUT
4 B+
5 B-

FB171 Optical Receiver

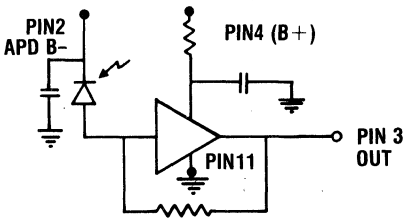

FB172 1728-Element Charge Coupled Linear Image Sensor

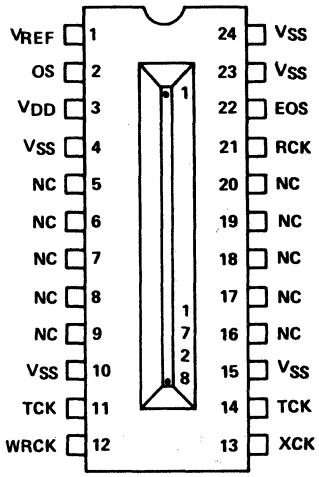

NC – No internal connection

FB173 128-Element Charge Coupled Linear Image Sensor

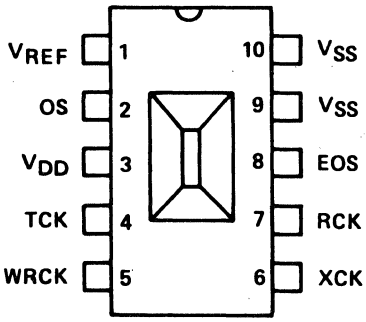

48. SCHEMATIC DRAWINGS

FB174 2048x1-Element Charge Coupled Linear Image Sensor

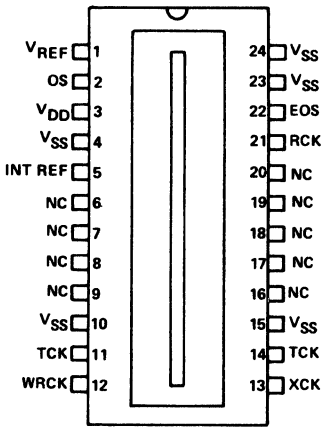

NC – No internal connection

FB175 3456x1 Linear Image Sensor

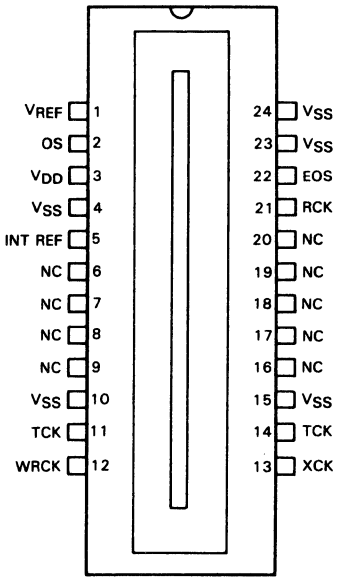

NC – No internal connection.

FB176 Fiber Optic Analog Receiver

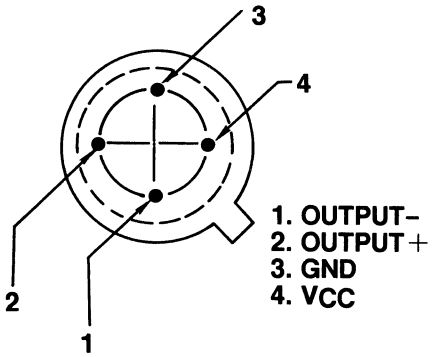

FB178 Optically Isolated Triac Driver

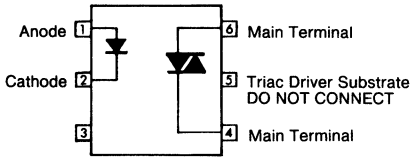

FB177 Optical Receiver Preamp

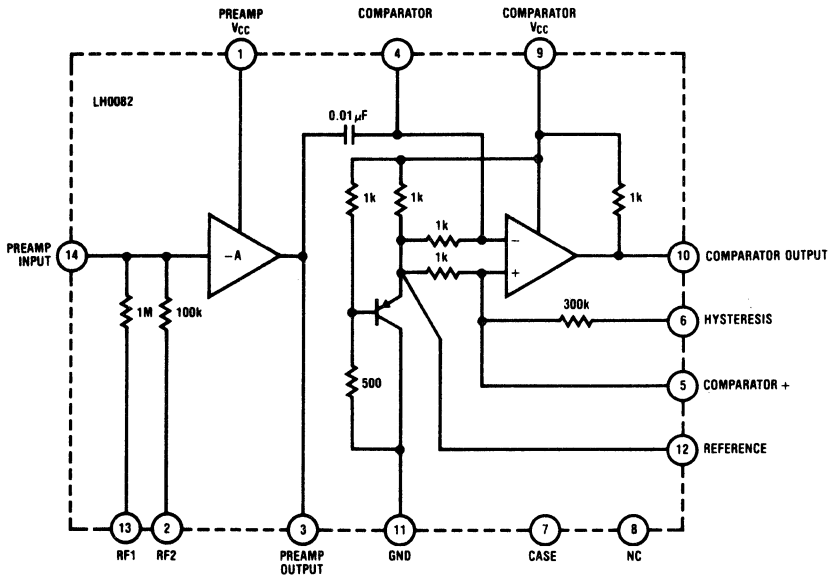

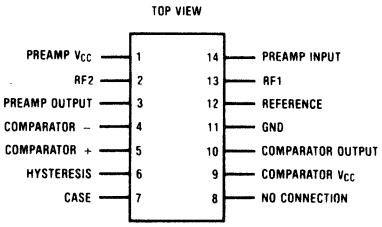

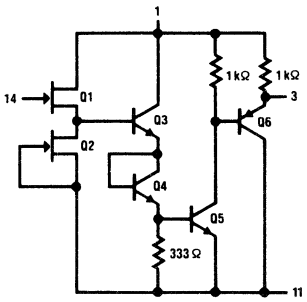

48. SCHEMATIC DRAWINGS

FB180

Photoelectric Amplifier Module

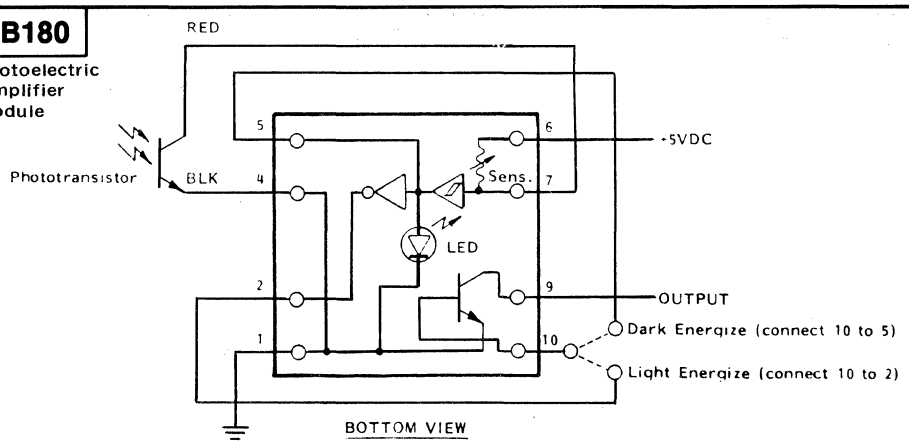

FB183 Reflective Sensor

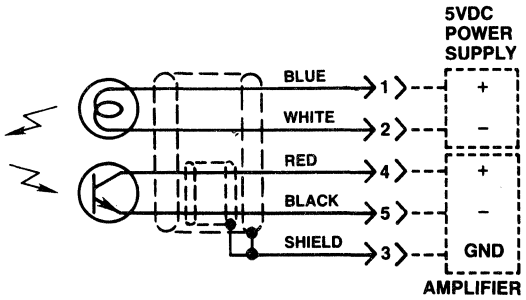

>X> = PIN NUMBER FOR CONNECTOR OPTION

FB184 Through Beam Fiber Optic Emitter/Detector

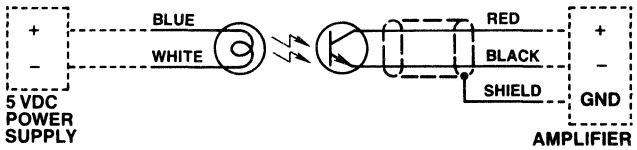

FB185 Emitter Detector for throughbeam detection system

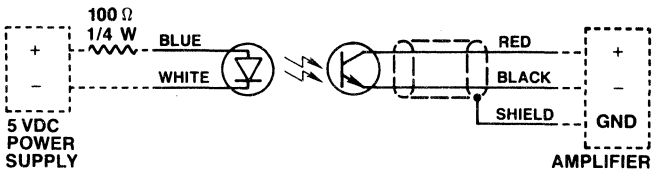

48. SCHEMATIC DRAWINGS

FB196 TTL-compatible Fiber Optic Transmitter/Receiver System

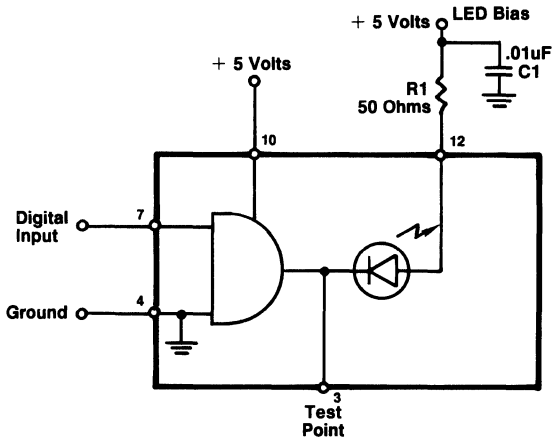

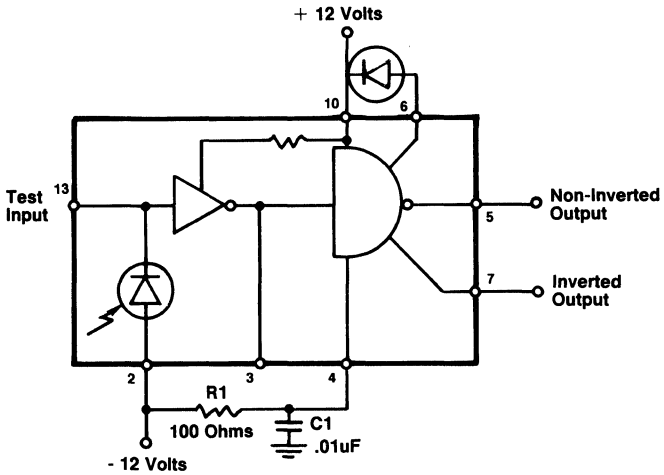

FB197 Display System w/64 Character ASCII Set and Display Support circuitry

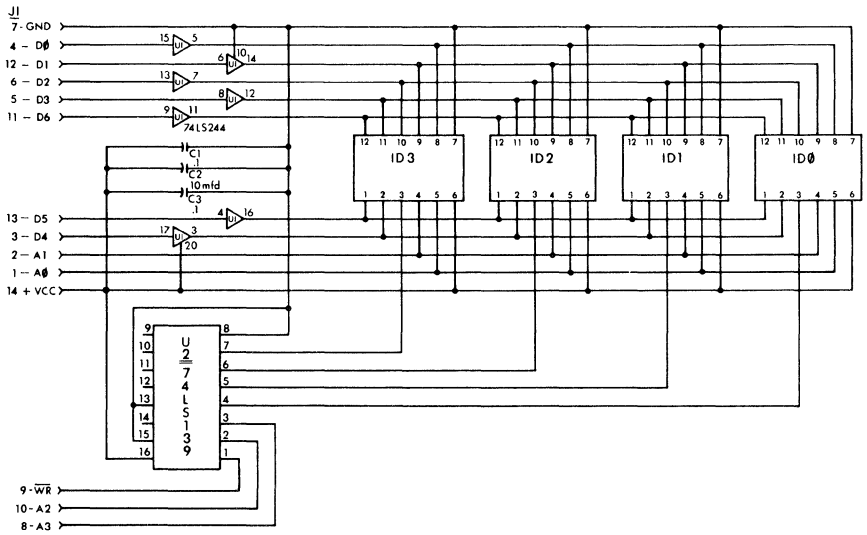

PIN	FUNCTION
1	AØ DIGIT SELECT
2	A1 DIGIT SELECT
3	D4 DATA INPUT
4	DØ DATA INPUT (LSB)
5	D3 DATA INPUT
6	D2 DATA INPUT
7	GND
8	A3 DIGIT SELECT
9	WR WRITE
10	A2 DIGIT SELECT
11	D6 DATA INPUT (MSB)
12	D1 DATA INPUT
13	D5 DATA INPUT
14	+ VCC

48. SCHEMATIC DRAWINGS

FB200 5 x 7 Dot Matrix Intelligent Display

Character Set

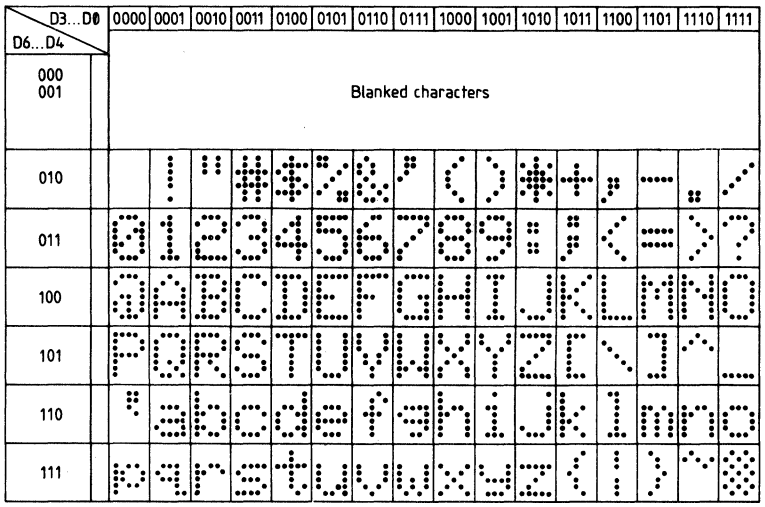

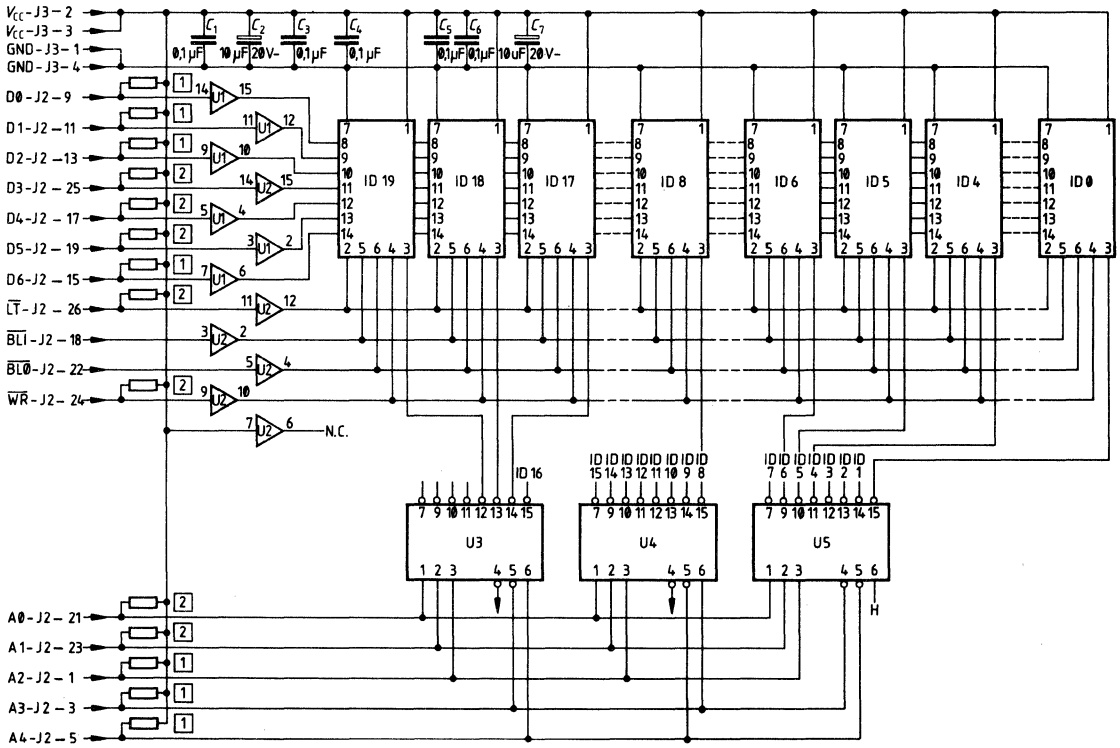

FB205 5 X 7 Dot Matrix Intelligent Display

INDICATOR TOP VIEW

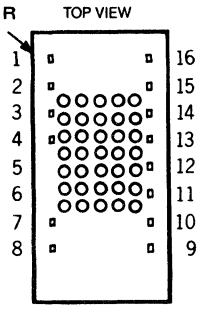

PIN FUNCTIONS

PIN	FUNCTION	PIN	FUNCTION
1	$\overline{LT}$ LAMP TEST	9	D0 DATA LSB
2	$\overline{WR}$ WRITE	10	D1 DATA
3	$\overline{BL1}$ BRIGHTNESS	11	D2 DATA
4	$\overline{BL0}$ BRIGHTNESS	12	D3 DATA
5	NO PIN	13	D4 DATA
6	NO PIN	14	D5 DATA
7	$\overline{CE}$ CHIP ENABLE	15	D6 DATA MSB
8	GND	16	+ VCC

48. SCHEMATIC DRAWINGS

FB198 Display System w/64 Character ASCII Set and Display support circuitry

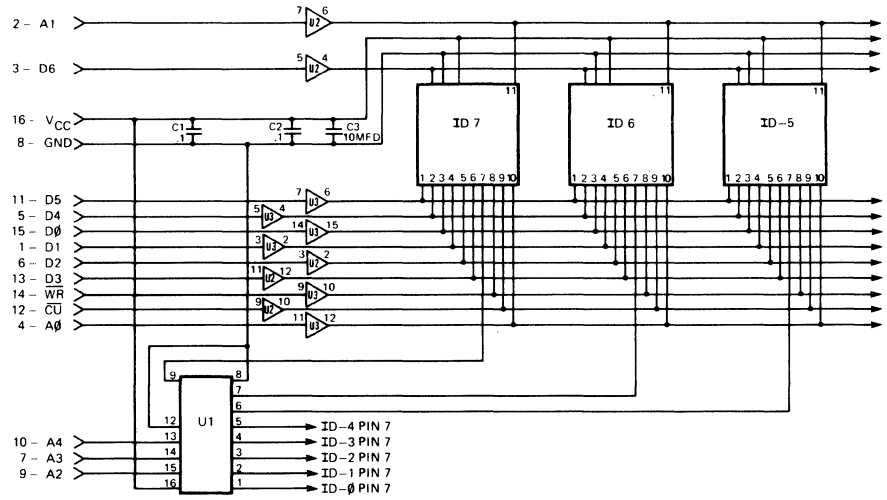

PIN	FUNCTION
1	D1 DATA INPUT
2	A1 CHARACTER ADDRESS
3	D6 DATA INPUT
4	AØ CHARACTER ADDRESS
5	D4 DATA INPUT
6	D2 DATA INPUT
7	A3 CHARACTER ADDRESS
8	GND
9	A2 CHARACTER ADDRESS
10	A4 CHARACTER ADDRESS
11	D5 DATA INPUT
12	CU CURSOR INPUT
13	D3 DATA INPUT
14	W WRITE
15	DØ DATA INPUT
16	VCC

FB213 8x8 Dot Matrix Programmable Display

TOP VIEW

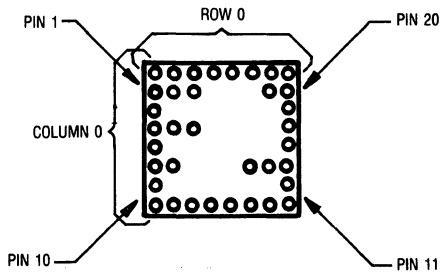

PIN DEFINITIONS

Pin		
1.	$\overline{RST}$	Resets the System. Active low.
2.	CLK_{OUT}	Clock output for daisy chaining
3.	$\overline{WR}$	Writes data into the display. Active low.
4.	$\overline{CE}$	Chip Enable. Active low.
5.	A0	Address Input (LSB)
6.	A1	Address Input
7.	A2	Address Input (MSB)
8.	A3	Address Input for control words.
9.	CLK_{IN}	Clock Input for daisy chaining
10.	R_{DIM}	Controls Brightness through R_{EXT}
11.	V_{CC}	Plus 5 volts power pin
12.	D0	Data Bus Bit 0 (LSB)
13.	D1	Data Bus Bit 1
14.	D2	Data Bus Bit 2
15.	D3	Data Bus Bit 3
16.	D4	Data Bus Bit 4
17.	D5	Data Bus Bit 5
18.	D6	Data Bus Bit 6
19.	D7	Data Bus Bit 7 (MSB)
20.	GND	Ground

48. SCHEMATIC DRAWINGS

FB201 Display w/Integrated Support Logic

Blockschaltbild

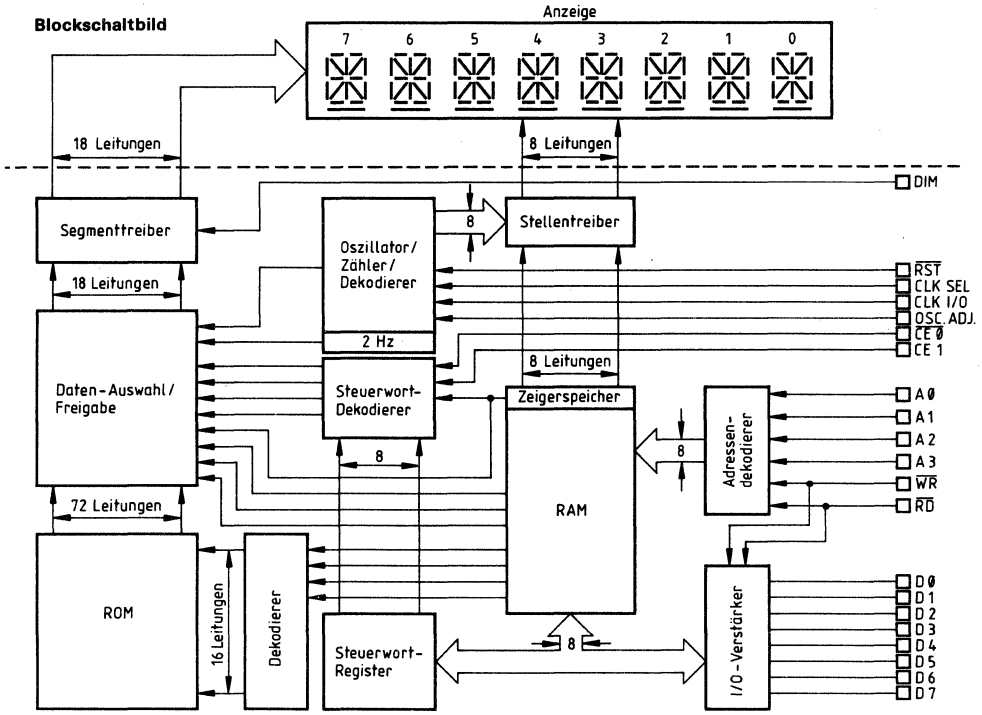

				D0	L	H	L	H	L	H	L	H	L	H	L	H	L	H	L	H
				D1	L	L	H	H	L	L	H	H	L	L	H	H	L	L	H	H
				D2	L	L	L	L	H	H	H	H	L	L	L	L	H	H	H	H
				D3	L	L	L	L	L	L	L	L	H	H	H	H	H	H	H	H
D7	D6	D5	D4	HEX	0	1	2	3	4	5	6	7	8	9	A	B	C	D	E	F
L	L	H	L	2		!	"	#	$	%	&	'	(	)	*	+	,	-	.	/
L	L	H	H	3	0	1	2	3	4	5	6	7	8	9	:	;	<	=	>	?
L	H	L	L	4	@	A	B	C	D	E	F	G	H	I	J	K	L	M	N	O
L	H	L	H	5	P	Q	R	S	T	U	V	W	X	Y	Z	[	\	]	^	_

FB207 4 Digit 16 Segmemt Alphanumeric Intelligent Display

Pin	Function	Pin	Function
1	$\overline{CE1}$ Chip Enable	18	$\overline{BL}$ Display Blank
2	$\overline{CE2}$ Chip Enable	17	D4 Data input
3	$\overline{CL}$ Clear	16	D5 Data input
4	CUE Cursor Enable	15	D6 Data input
5	$\overline{CU}$ Cursor Select	14	D3 Data input
6	$\overline{WR}$ Write	13	D2 Data input
7	A1 Digit Select	12	D1 Data input
8	A0 Digit Select	11	D0 Data input
9	V_{CC}	10	GND

TOP VIEW

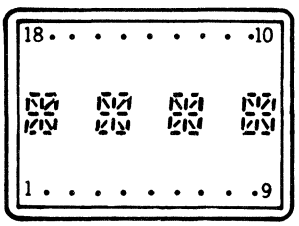

48. SCHEMATIC DRAWINGS

FB202 4 digit Alpha-Numeric Intelligent Display w/Integrated Logic

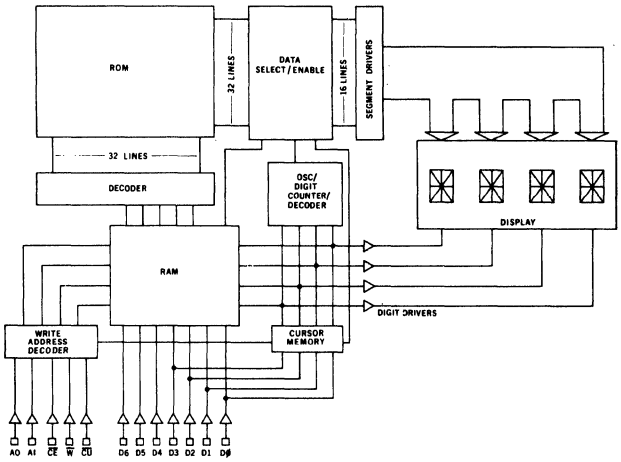

INTERNAL SCHEMATIC

Pin		Function	Pin		Function
1	D5	Data Input	11	A1	Digit Select
2	D4	Data Input	12	Unused	
3	DØ	Data Input	13	Unused	
4	D1	Data Input	14	Unused	
5	D2	Data Input	15	Unused	
6	D3	Data Input	16	Unused	
7	$\overline{CE}$	Chip Enable	17	Unused	
8	$\overline{W}$	Write	18	V+	
9	$\overline{CU}$	Cursor Input	19	V–	
10	AØ	Digit Select	20	D6	Data Input

FB203 8 character Alpha-Numeric Display System w/Integrated Logic

DL-1814 BLOCK DIAGRAM

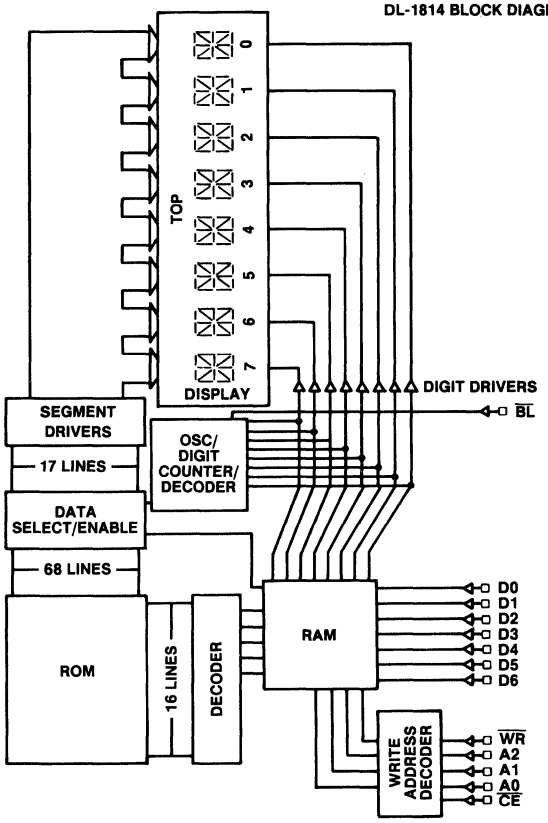

Pin		Function	Pin	Function
1	D0	Data input	14	$\overline{BL}$ (Blank)
2	D1	Data input	15	NO PIN
3	D2	Data input	16	NO PIN
4	D3	Data input	17	NO PIN
5	D4	Data input	18	NO PIN
6	D5	Data input	19	NO PIN
7	D6	Data input	20	NO PIN
8	GND		21	NO PIN
9	A0	Address	22	NO PIN
10	A1	Address	23	NO PIN
11	A2	Address	24	NO PIN
12	$\overline{WR}$	Write	25	NO PIN
13	VCC		26	$\overline{CE}$ (Chip Enable)

FB209 Wideband System for Transmission of Composite Video

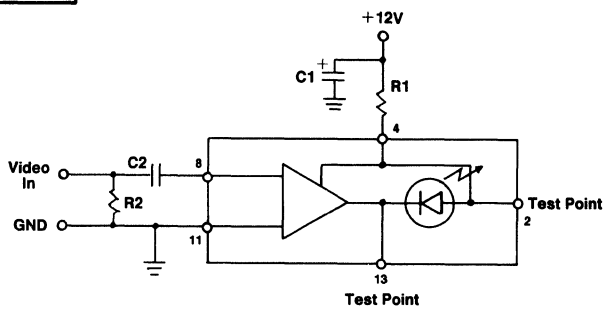

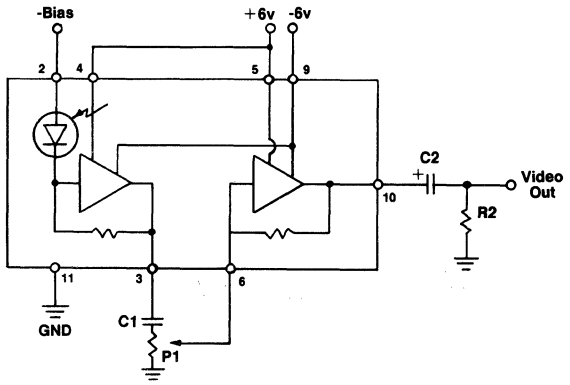

FB206 5 X 7 Dot Matrix Intelligent Display

TOP VIEW

PIN 1 INDICATOR

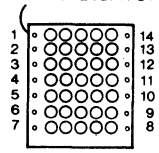

Pin	Function	Pin	Function
1	VCC	14	D6 Data input MSB
2	$\overline{LT}$ Lamp test	13	D5 Data input
3	$\overline{CE}$ Chip enable	12	D4 Data input
4	$\overline{WR}$ Write	11	D3 Data input
5	$\overline{BL1}$ Brightness	10	D2 Data input
6	$\overline{BL0}$ Brightness	9	D1 Data input
7	GND	8	D0 Data input LSB

49. OUTLINE DRAWINGS

NOTES:

These outline drawings are intended as a guide for the user. They should not be used for construction purposes without first checking with the appropriate manufacturer.

These drawings are referenced in the Technical Sections of this D.A.T.A.BOOK in accordance with information supplied by the manufacturers.

The TOand MO drawings have been reproduced from JEDEC Registration Data Files with the permission of the National Electrical Manufacturer's Association – Electronic Industries Association. JEDEC designations are assigned only to outlines submitted by the JC-11 Committee on Mechanical Standardization. The procedure of assigning and announcing the JEDEC designation constitutes registration. Suffices such as AA, AB or MA, MB following the TO or MO Series number indicates dimensional variations of the basic outline. JEDEC type numbers which have letter S suffices indicate a device that is manufactured with leads shorter than specified in the registered data of the device, but not shorter than 12.7 mm (.5 inch). The suffix letter S need not be marked on individual devices.

All dimensions are in inches except where noted.

MO001

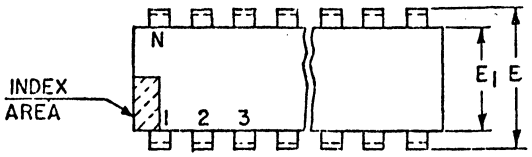

NOTES:

1. Refer to applicable symbol list.
2. Dimensioning and tolerancing per ANSI Y14.5-1973.
3. Leads within .005 radius of True Position (TP) at gauge plane with maximum material condition and unit installed.
4. e_1 and e_A applies in zone L_2 when unit installed.
5. α applies to spread leads prior to installation.
6. N is the maximum quantity of lead positions.
7. N_1 is the allowable quantity of missing leads.
8. E_1 does not include mold flash.
9. Outlines on which the seating plane is coincident with the base plane (A_1 = 0) terminal lead stand-offs are not required, and B_1 may equal B along any part of the lead above the seating/base plane.
10. Controlling Dimension: INCH

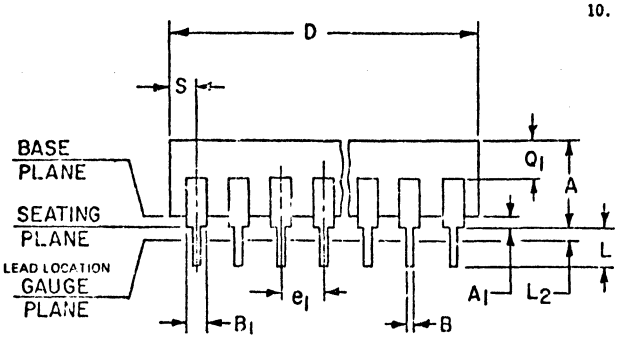

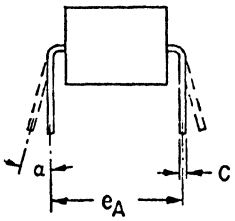

SYMBOL	(ALL DIMENSIONS IN INCHES) AM MIN.	AM MAX.	NOTE
A	.115	.215	
A_1	.015	.070	
B	.015	.021	
B_1	.040	.070	
C	.008	.012	
D	.320	.350	
E	.290	.325	
E_1	.225	.280	8
e_1	.100 TP		3,4
e_A	.300 TP		3,4
L	.100	.150	
L_2	.000	.030	
α	0°	15°	5
N	6		6
N_1	0		7
O_1	-	-	
S	.050	.080	
NOTE	1,2,10		

49. OUTLINE DRAWINGS

PA7

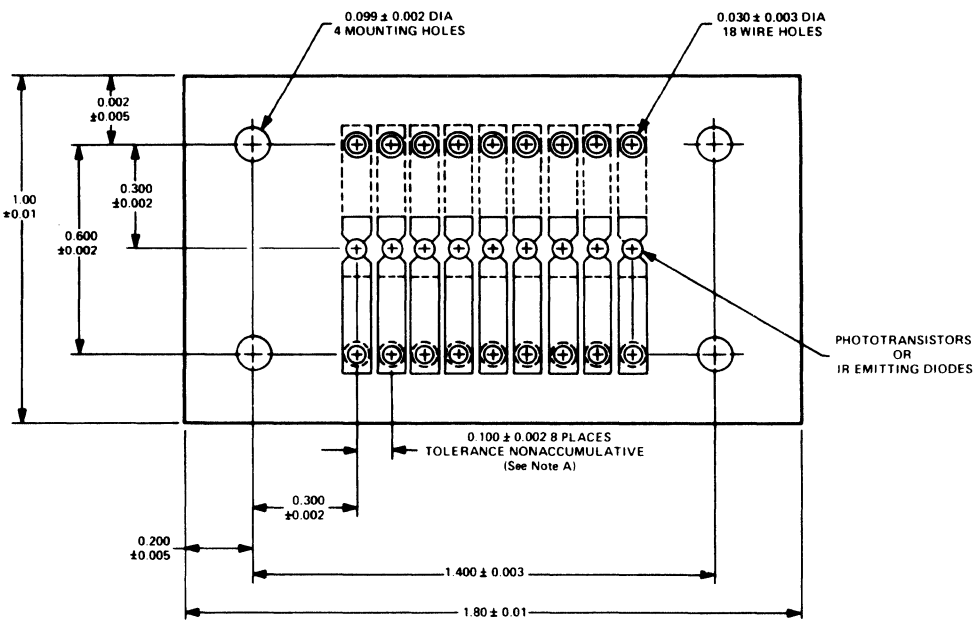

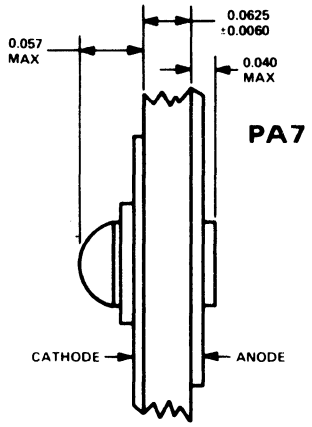

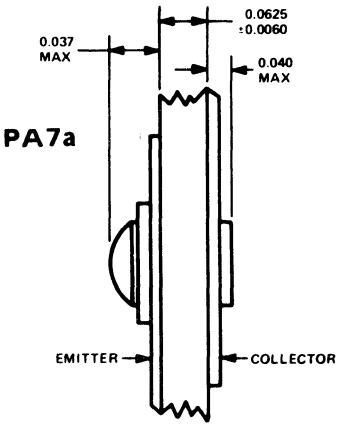

PA11

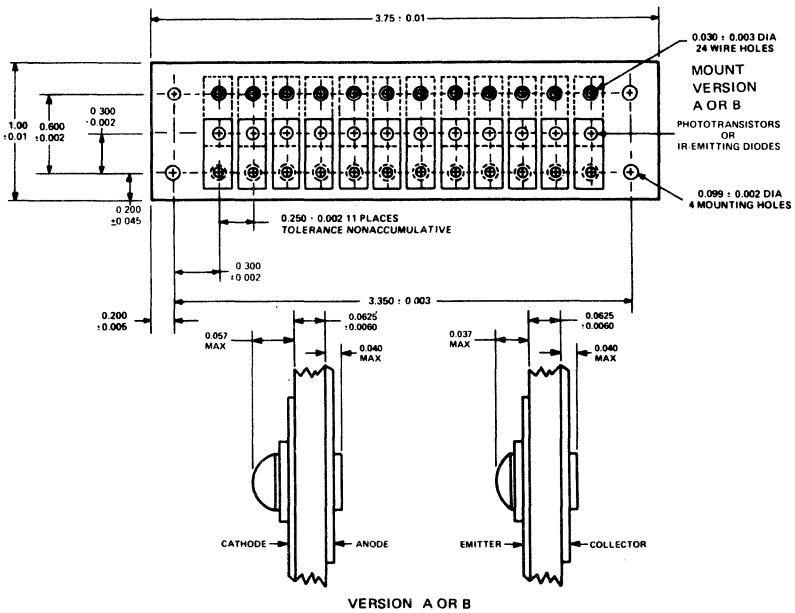

49. OUTLINE DRAWINGS

PA12

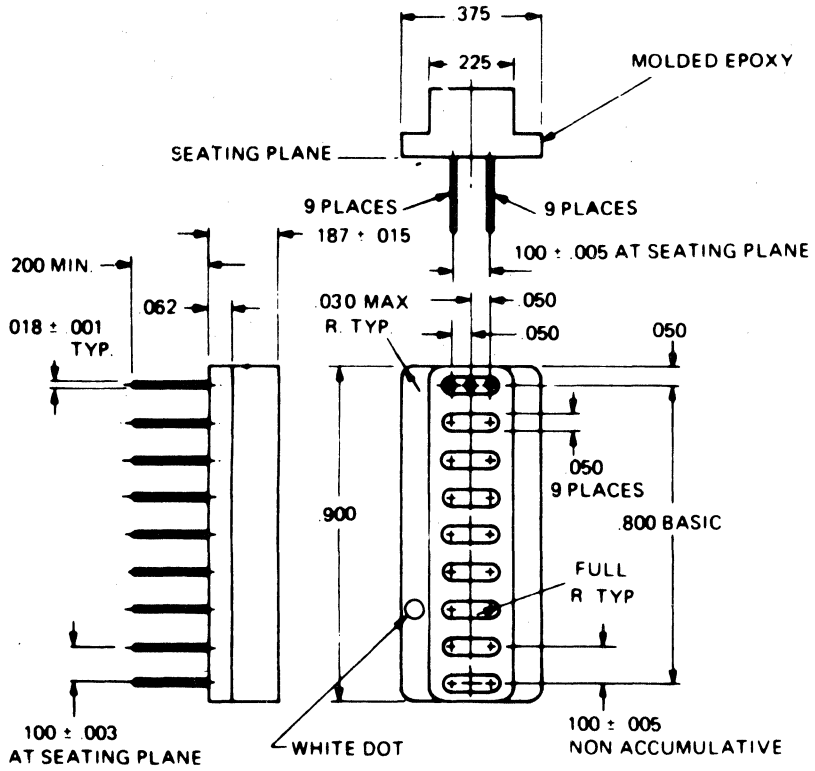

PA13

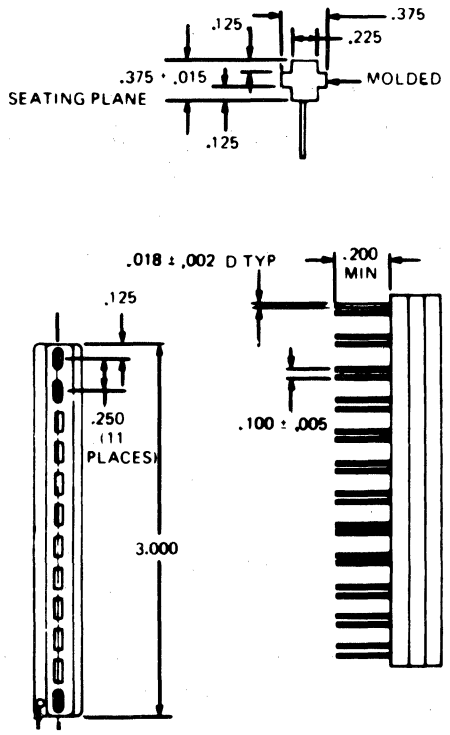

PA18

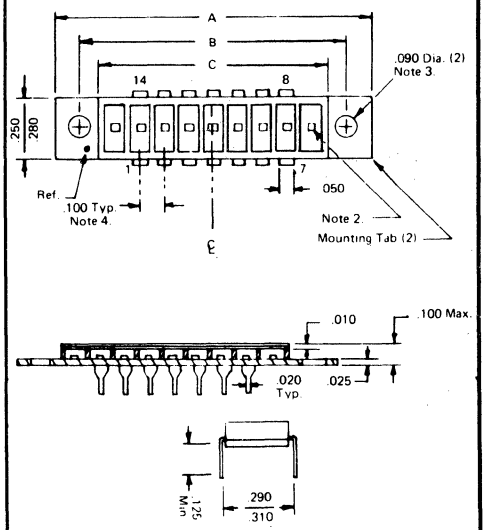

	A	B	C
PA18			.22
PA18a			.32
PA18b			.42
PA18c	.90	.70	.52
PA18d	1.00	.80	.62
PA18e	1.10	.90	.72
PA18f	1.20	1.00	.82
PA18g	1.30	1.10	.92
PA18h	1.40	1.20	1.02
PA18j	1.50	1.30	1.12
PA18k	1.60	1.40	1.22

NOTES:
1. All dimensions in inches.
2. Active elements to be aligned on .100" centers ±.005". (Note: Chips are purposely staggered to align non-symmetrical active areas).
3. Mounting holes aligned ±.005" with center line of sensors.
4. Leads symmetrical with package based on number of leads and number of cavities.

49. OUTLINE DRAWINGS

PA23

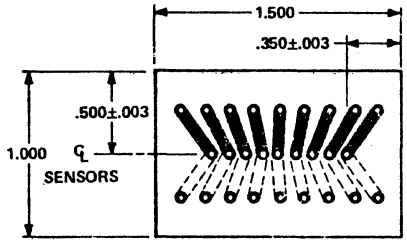

PA26

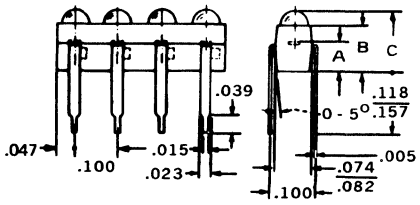

	A	B	C
PA26	.066	.098	.137
	.070	.106	MAX
PA26a	.070	.078	.122
	.078	.086	MAX

PA27

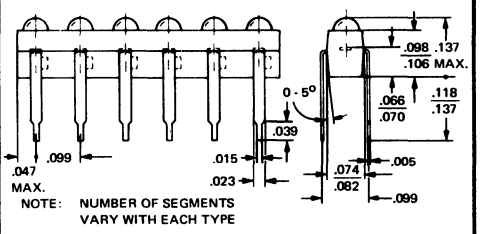

PA28

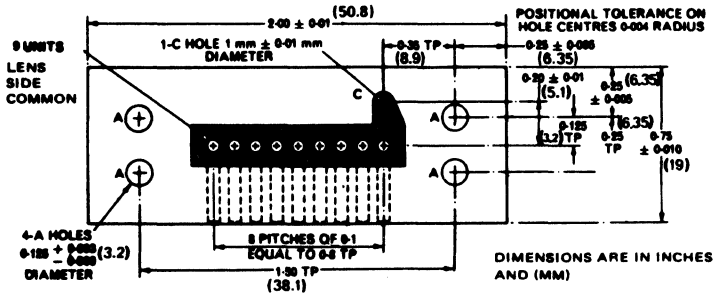

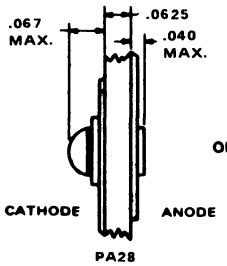

SIDE VIEWS
OF ACTIVE ELEMENTS

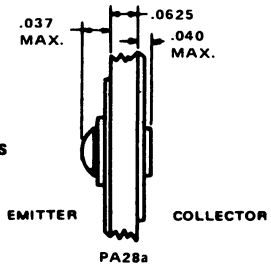

PA29

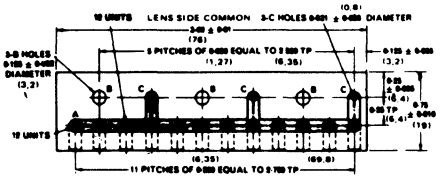

ALL DIMENSIONS ARE IN INCHES
AND (MM)

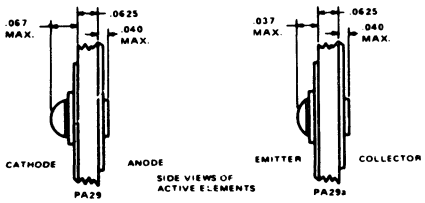

PA33

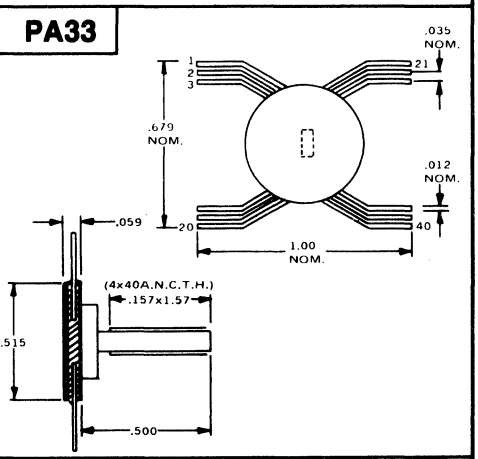

PA34

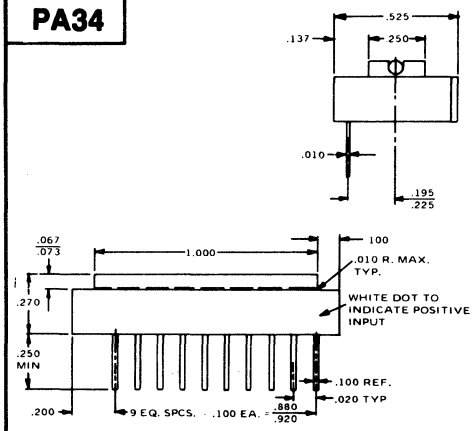

PA35

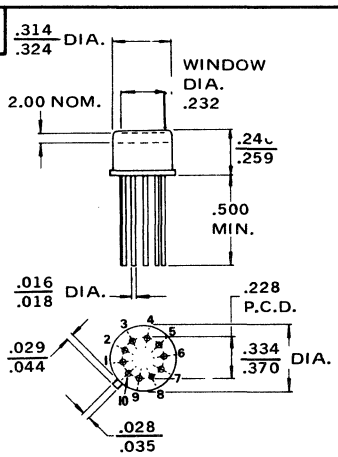

PA36

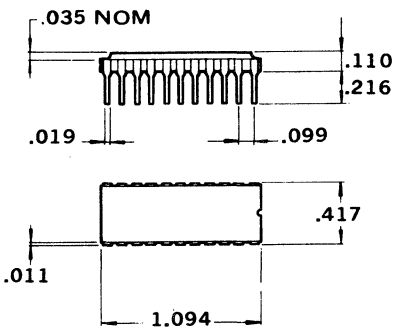

49. OUTLINE DRAWINGS

PA37

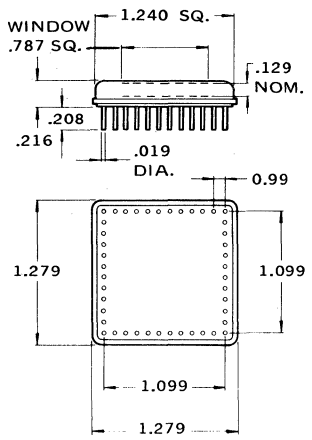

PA38

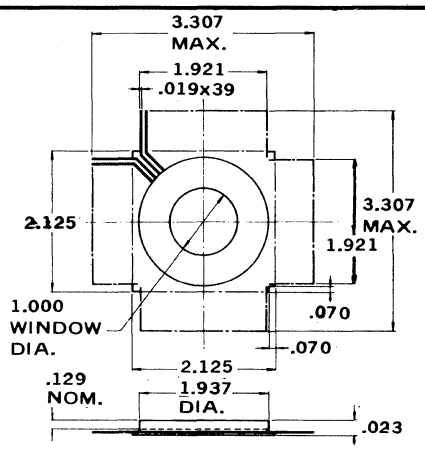

PA41

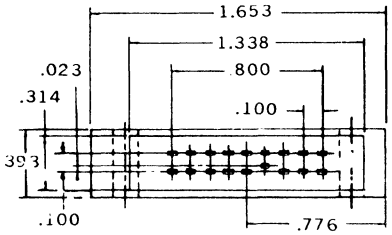

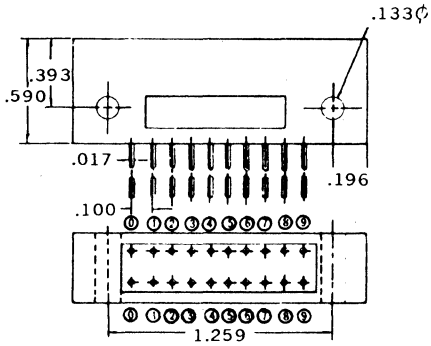

FOR PA41a ONLY — PIN TERMINALS (6) ARE OFFSET AS SHOWN.

PA42

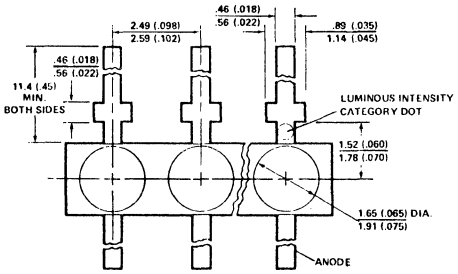

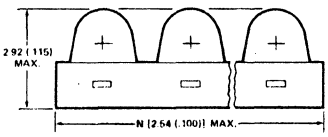

PA42: 3 ELEMENT
PA42a: 4 ELEMENT
PA42b: 5 ELEMENT

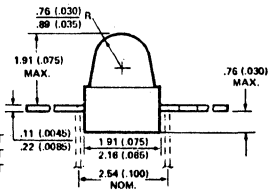

PA44

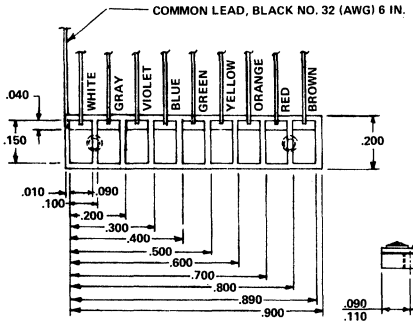

	A
PA44	.200
PA44a	.300
PA44b	.400
PA44c	.500
PA44d	.600
PA44e	.700

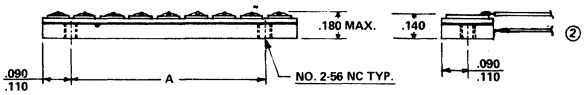

49. OUTLINE DRAWINGS

PA47

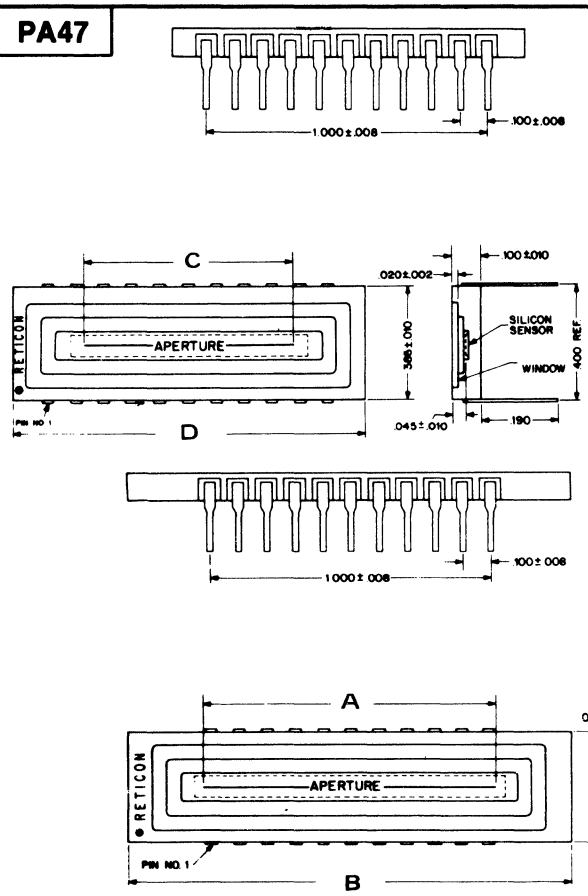

	A	B	C	D
PA47	1.024	1.584 1.616		
PA47a	1.106	1.584 1.616		
PA47b			.553	.890 .910
PA47c	1.020	1.584 1.616		
PA47d	1.020	1.782 1.818		
PA47e	.605	1.237 1.263		
PA47f			.512	.890 .910
PA47g	.768	1.237 1.263		
PA47h	.126	1.060 1.080		
PA47j	.476	1.069 1.091		
PA47k	1.01	1.584 1.616		
PA47m			.605	.890 .910
PA47n			.256	.739 .757
PA47p			.126	.790 .810
PA47u			.252	.739 .757
PA47r			.504	.890 .910
PA47s	1.008	1.584 1.616		

PA48

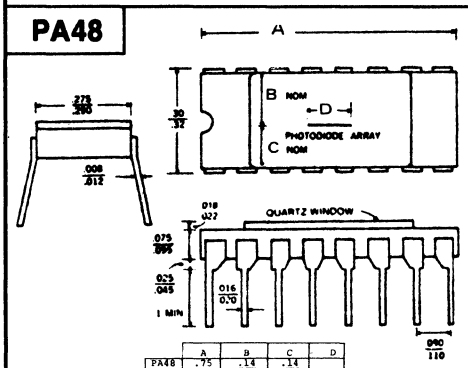

	A	B	C	D
PA48	.75 .76	.14 NOM	.14 NOM	.320
PA48a	.74 .76	.14 NOM	.14 NOM	.128
PA48b	.74 .76	.16 NOM	.12 NOM	.128
PA48c	.74 .76	.14 NOM	.14 NOM	.256

PA50

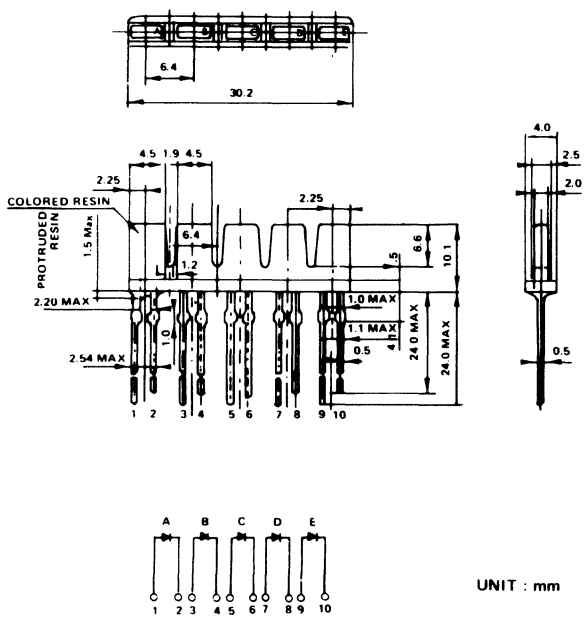

UNIT : mm

PA51

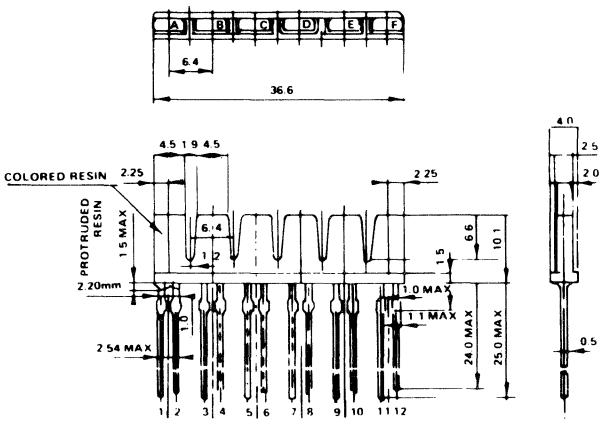

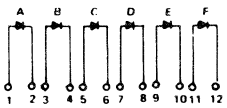

49. OUTLINE DRAWINGS

PA52

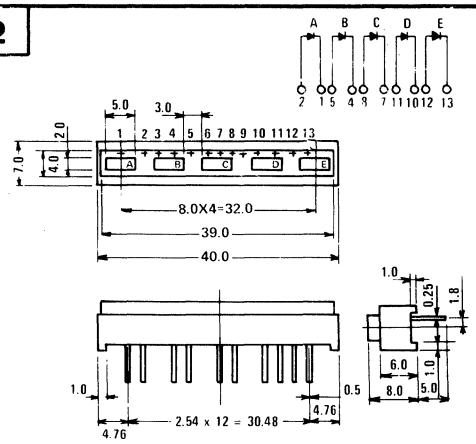

PA53

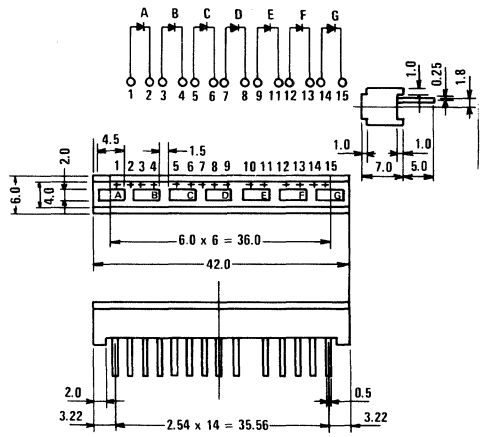

PA54

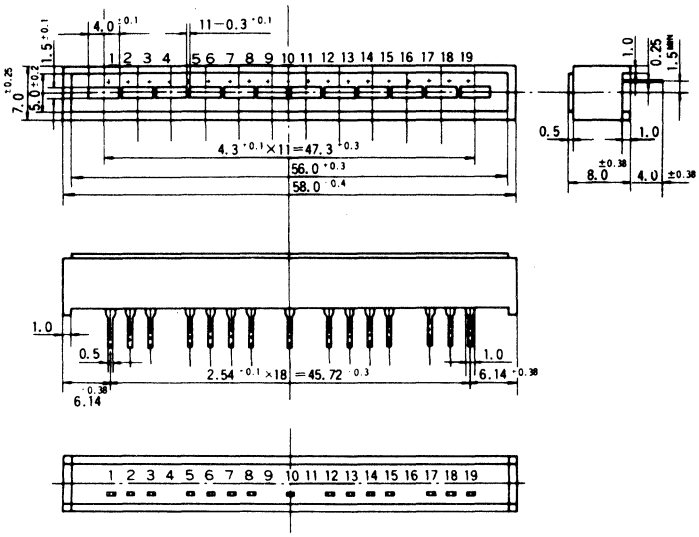

PA55

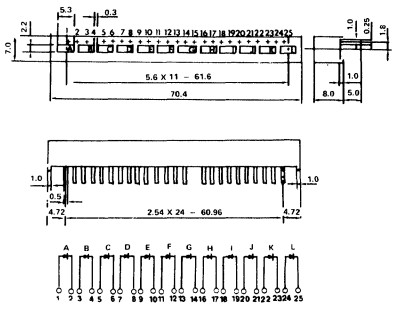

PA56

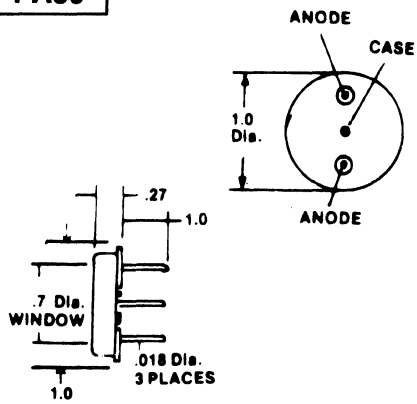

PA57

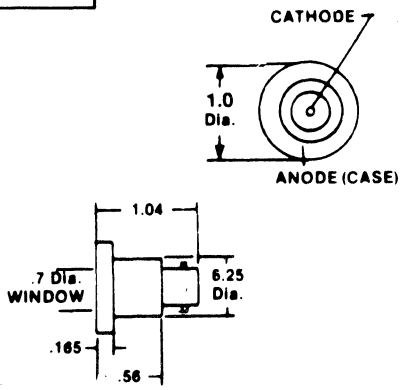

PA58

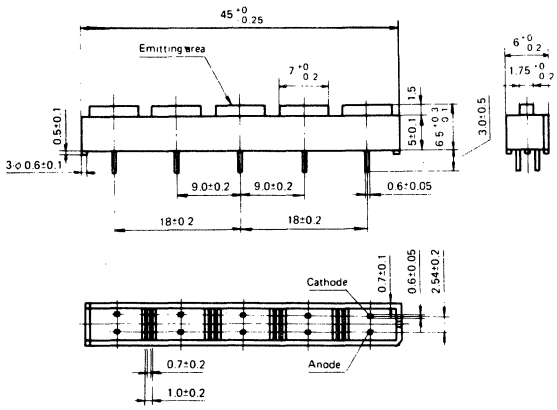

49. OUTLINE DRAWINGS

PA59

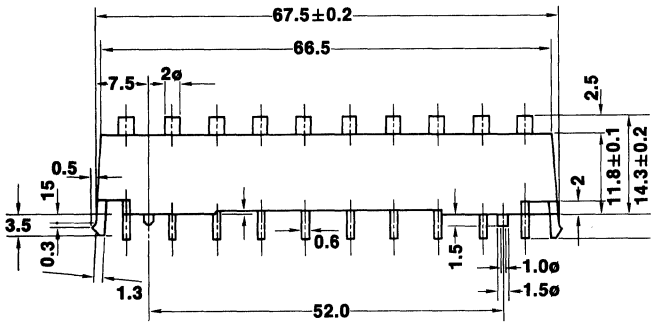

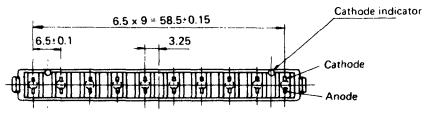

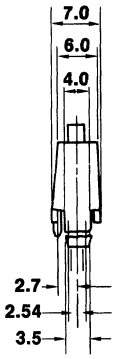

PA61

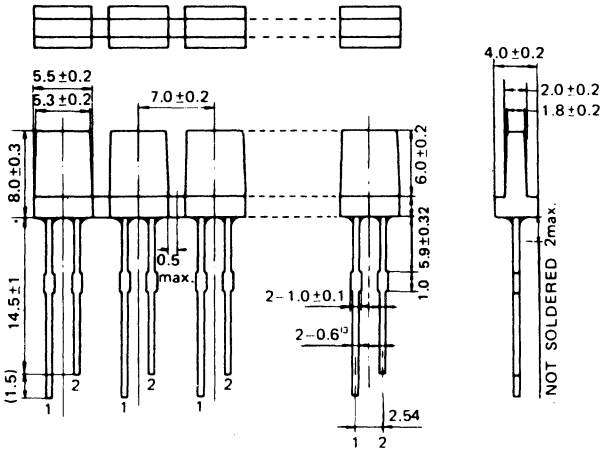

—	Type No.		
	Red	Green	Amber
Sole	LN217RP	LN317GP	LN417YP
2 Arrays	LN02202P	LN02302P	LN02402P
3 Arrays	LN03202P	LN03302P	LN03402P
4 Arrays	LN04202P	LN04302P	LN04402P
5 Arrays	LN05202P	LN05302P	LN05402P
6 Arrays	LN06202P	LN06302P	LN06402P
7 Arrays	LN07202P	LN07302P	LN07402P

PA62

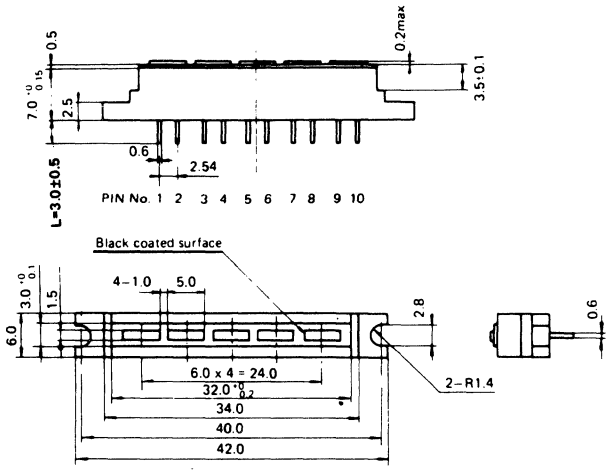

Pin No.	
Anode	Cath-ode
1	2
3	4
5	6
7	8
9	10

PA63

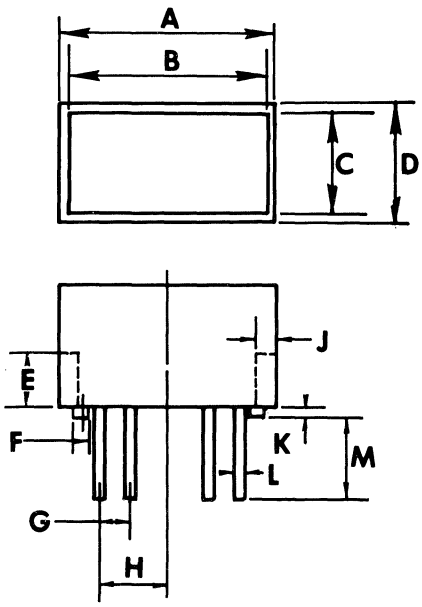

PA63
1 Cathode
2 Anode
3 Cathode
4 Anode

PA63a
1 Cathode
2 Anode
3 Cathode
4 Anode
5 Cathode
6 Anode
7 Cathode
8 Anode

	A	B	C	D	E	F	G	H	J	K	L	M
PA63	.618 .642	.581 .600	.187 .207	.224 .248	.098	.079	.100	.200	.027	.020	.020	.138 MIN
PA63a	.618 .642	.581 .600	.462 .482	.500 .524	.098	.031	.100	.200	.027	.020	.020	.138 MIN

49. OUTLINE DRAWINGS

PA73

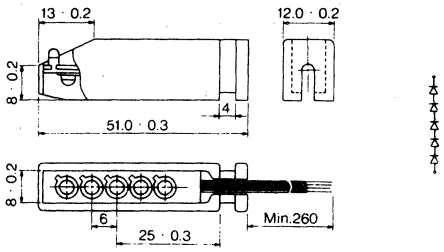

PA74

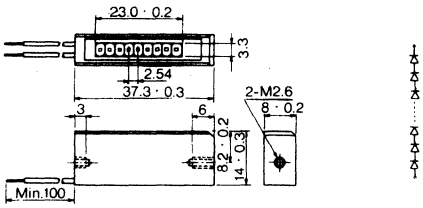

PA64

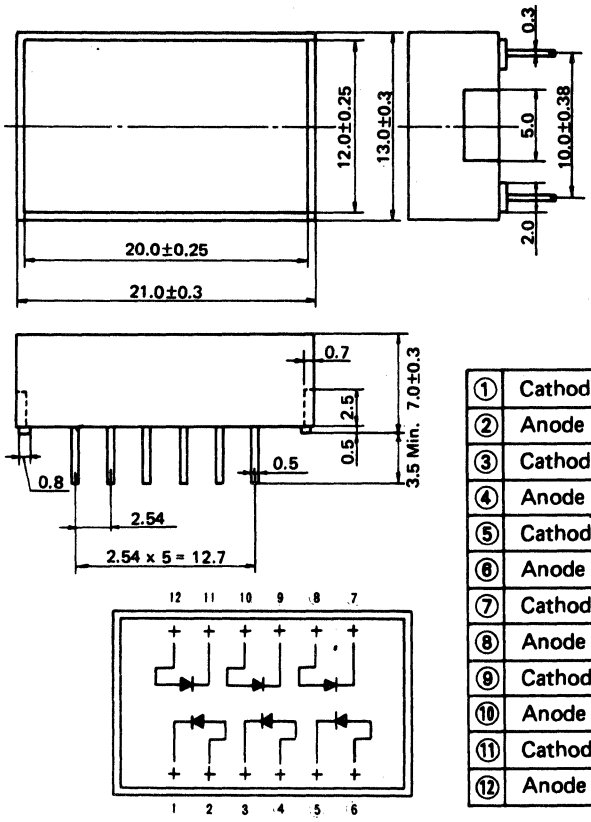

①	Cathode
②	Anode
③	Cathode
④	Anode
⑤	Cathode
⑥	Anode
⑦	Cathode
⑧	Anode
⑨	Cathode
⑩	Anode
⑪	Cathode
⑫	Anode

PA65

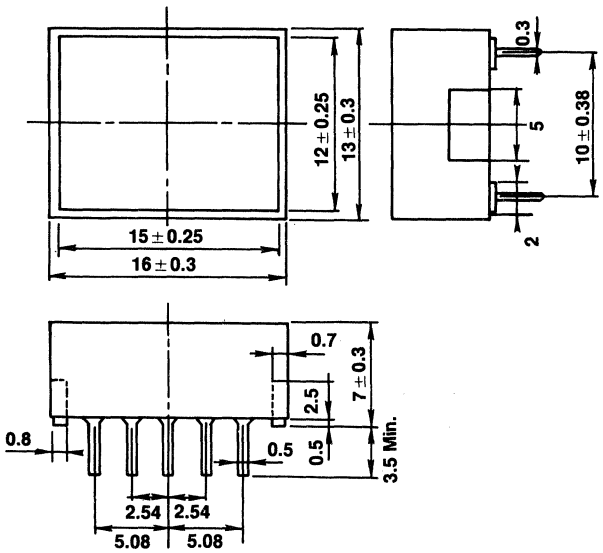

1 Anode
2 Cathode
3 Anode
4 Cathode
5 Anode
6 Anode
7 Cathode
8 Anode
9 Cathode
10 Anode

PA75

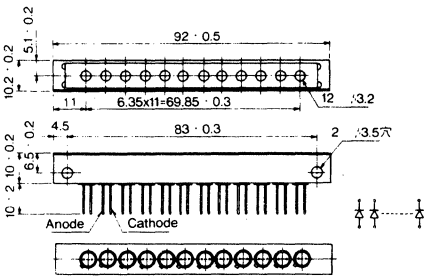

PA70

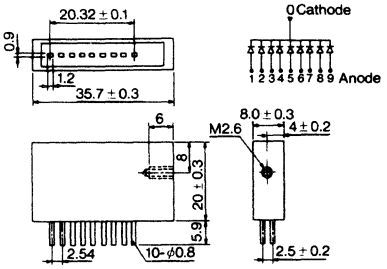

49. OUTLINE DRAWINGS

PA71

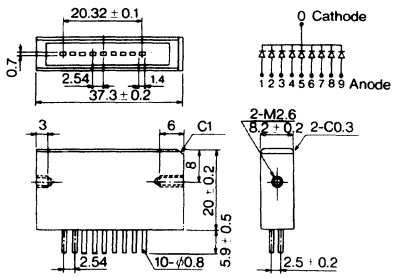

PA72

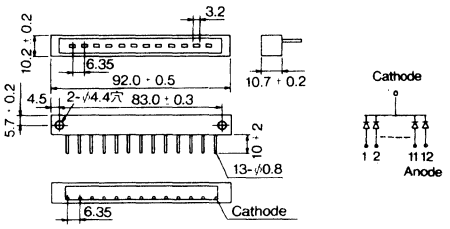

PA66

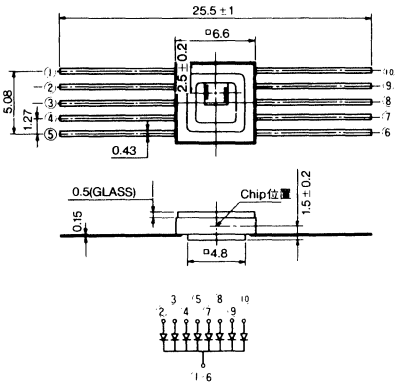

PA67

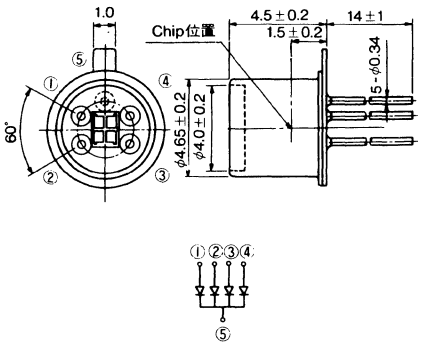

PA68

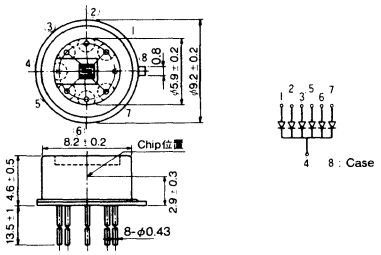

PA69

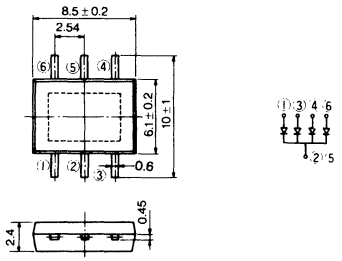

PA76

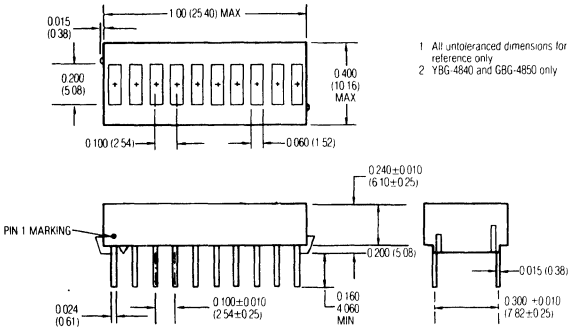

1 All untolerenced dimensions for reference only
2 YBG-4840 and GBG-4850 only

PA77

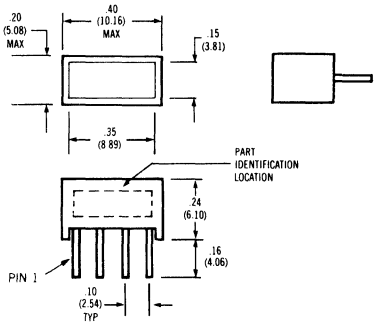

PIN	PIN FUNCTION
1	Cathode — a
2	Anode — a
3	Cathode — b
4	Anode — b

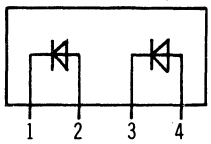

PA78

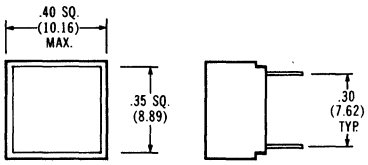

PIN	PIN FUNCTION
1	Cathode a
2	Anode a
3	Anode b
4	Cathode b
5	Cathode c
6	Anode c
7	Anode d
8	Cathode d

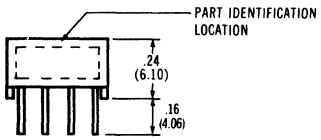

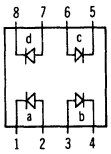

49. OUTLINE DRAWINGS

PA79

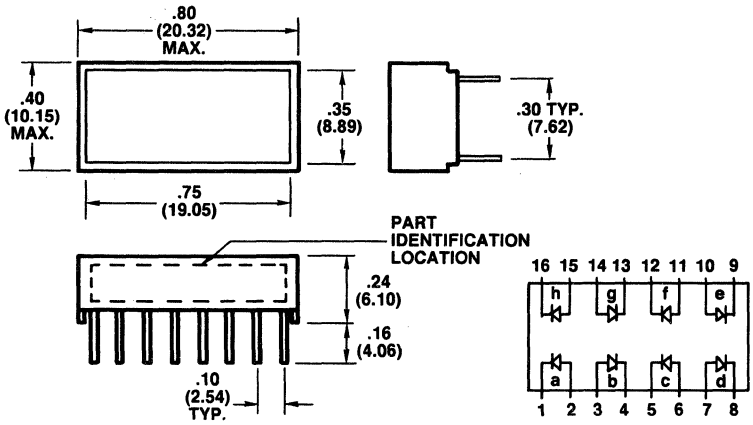

PIN	FUNCTION
1	Cathode a
2	Anode a
3	Anode b
4	Cathode b
5	Cathode c
6	Anode c
7	Anode d
8	Cathode d
9	Cathode e
10	Anode e
11	Anode i
12	Cathode i
13	Cathode g
14	Anode g
15	Anode h
16	Cathode h

PA84

Package Dimensions in Inches (mm)

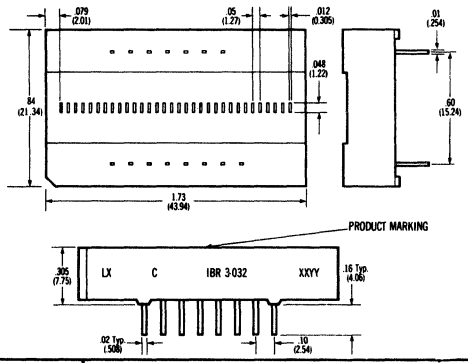

INPUT PIN FUNCTIONS:

Pin	Signal	Function
1	D6	Binary data input
2	D5	Binary data input
3	D4	Binary data input
4	D3	Binary data input
5	D2	Binary data input
6	D1	Binary data input
7	D0	Binary data input
8	GND	Ground
9	NC	No connection
10	Vcc	+ 5 volts
11	$\overline{BLO}$	Brightness control
12	$\overline{BLI}$	Brightness control
13	$\overline{WR}$	Write input
14	$\overline{CEO}$	Chip enable
15	$\overline{CEI}$	Chip enable
16	$\overline{LT}$	Lamp test

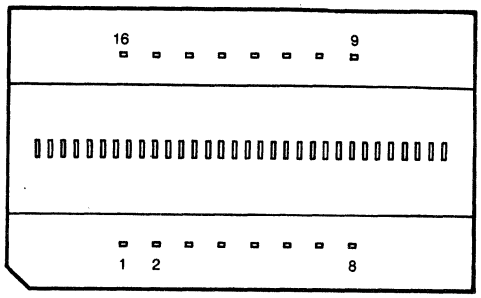

PA81

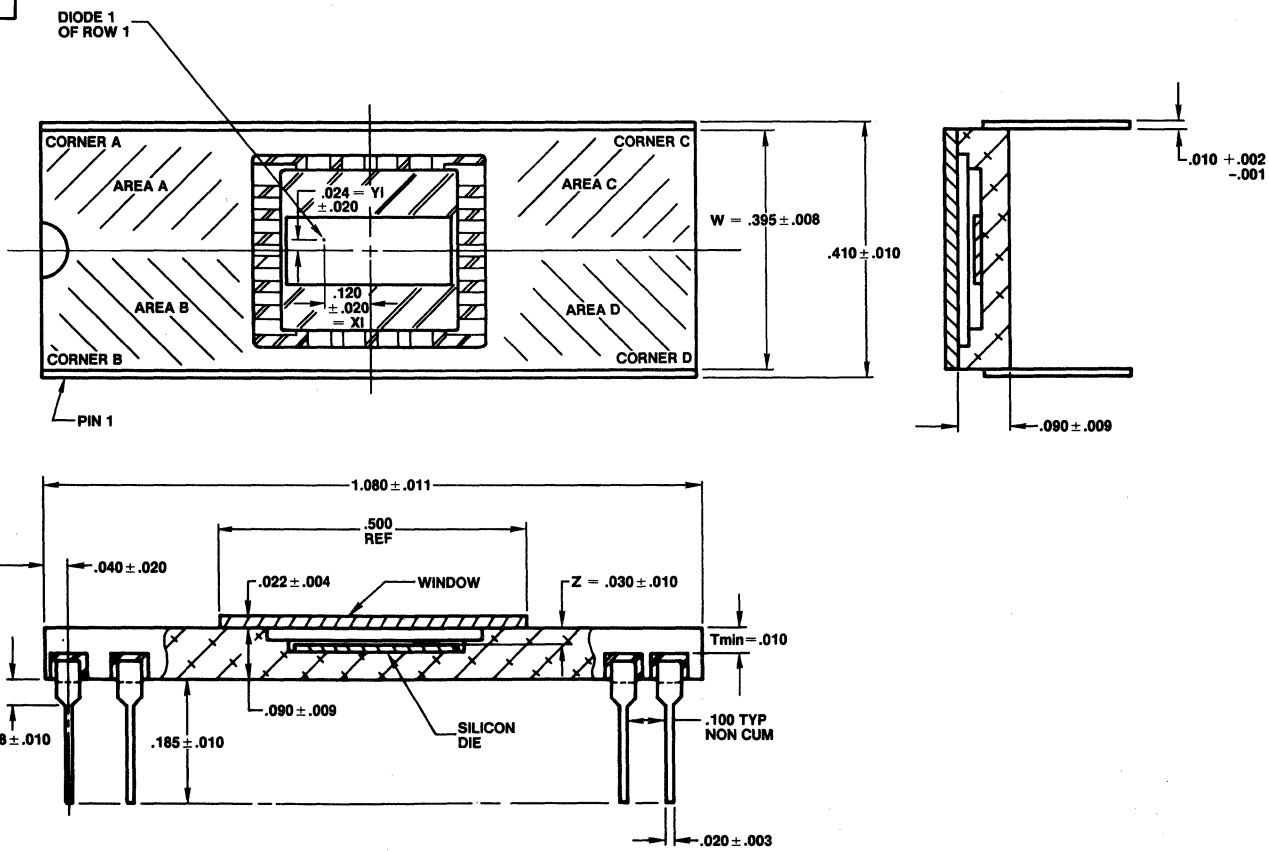

49. OUTLINE DRAWINGS

PA83

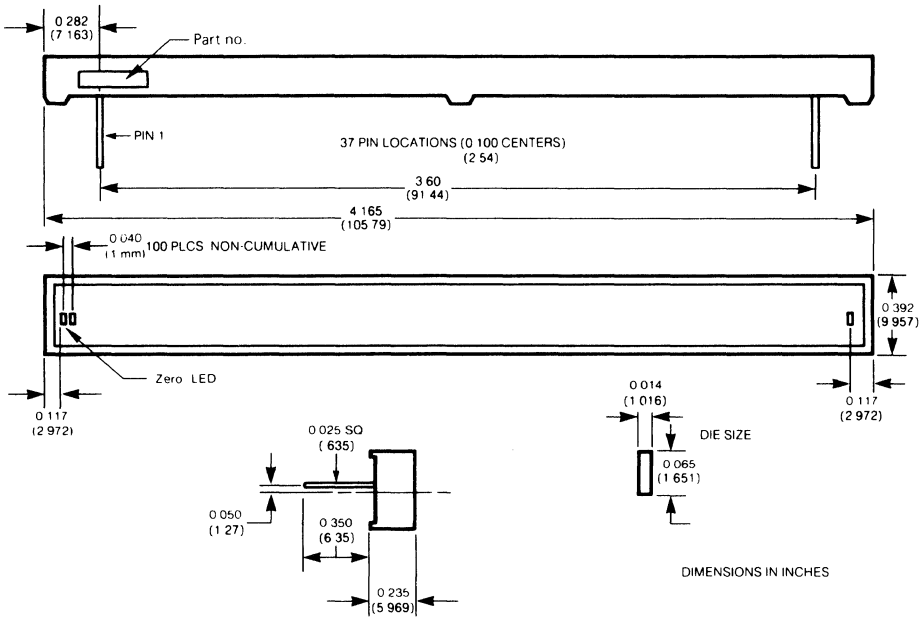

CIRCUIT DIAGRAM

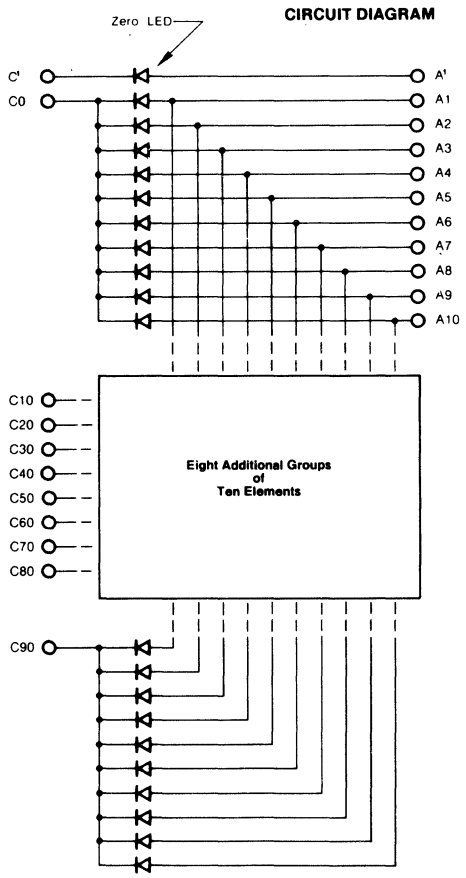

Pin Location	Designation
1	C0
2	A4
3	C'
5	C10
6	A1
7	A8
9	C20
11	A'
13	C30
15	A7
17	C40
19	A2
21	C50
23	A3
25	C60
27	A10
29	C70
31	A9
33	C80
34	A5
35	A6
37	C90

Note A particular element is selected by the common cathode number and the anode number
For example element 56 is lighted by addressed C50 and A6

PA86

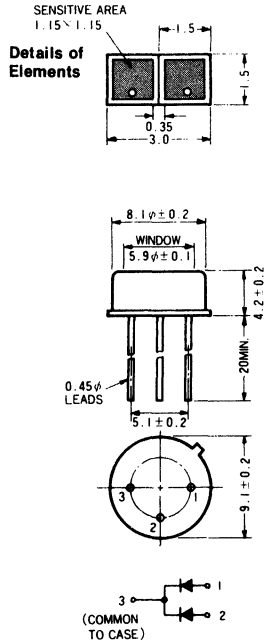

PA87

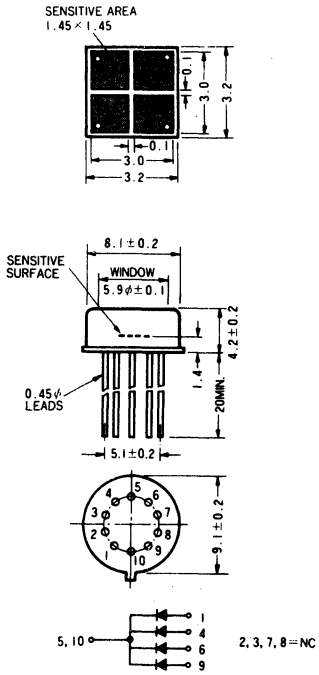

49. OUTLINE DRAWINGS

PA82

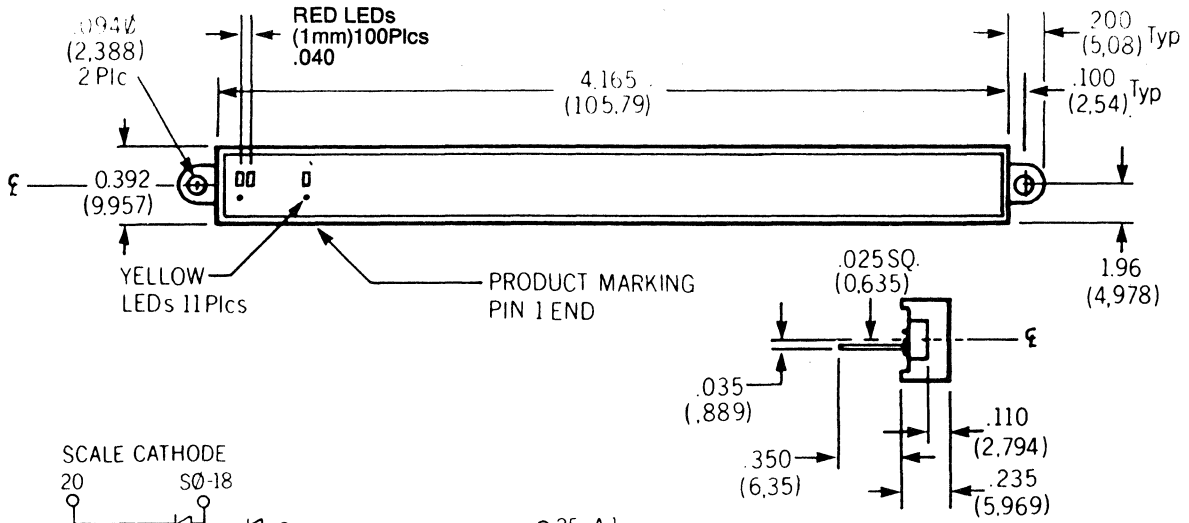

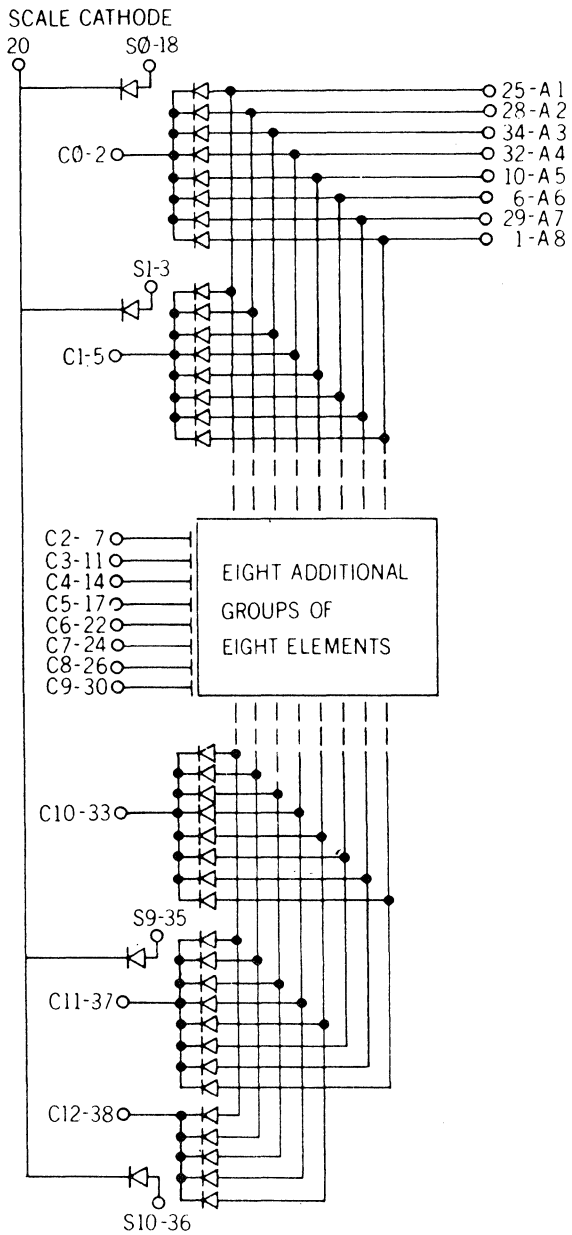

ADDITIONAL SCALE ANODES	PIN
S2	9
S3	13
S4	15
S5	19
S6	23
S7	27
S8	31

Pin	Function	Pin	Function
1	A8	20	SCALE CATH
2	CØ	21	NC
3	S1	22	C6
4	NC	23	S6
5	C1	24	C7
6	A6	25	A1
7	C2	26	C8
8	NC	27	S7
9	S2	28	A2
10	A5	29	A7
11	C3	30	C9
12	NC	31	S8
13	S3	32	A4
14	C4	33	C10
15	S4	34	A3
16	NC	35	S9
17	C5	36	S10
18	SØ	37	C11
19	S5	38	C12

A = Anodes
C = Cathodes
S = Scale Anodes

Package Dimensions in Inches (mm)

49. OUTLINE DRAWINGS

PA88

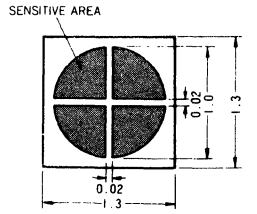

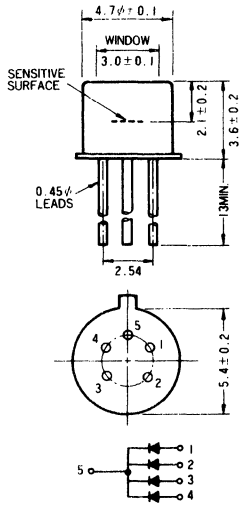

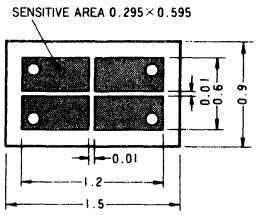

PA89

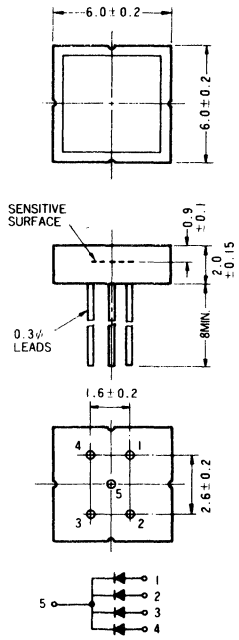

PA90

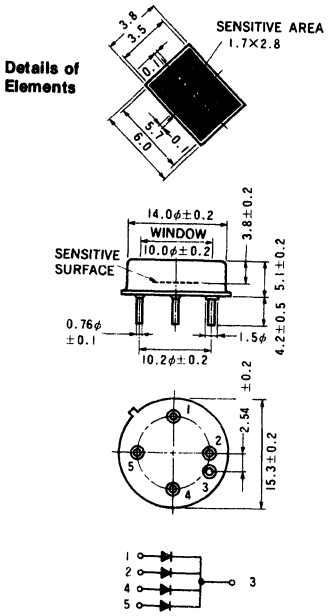

PA91

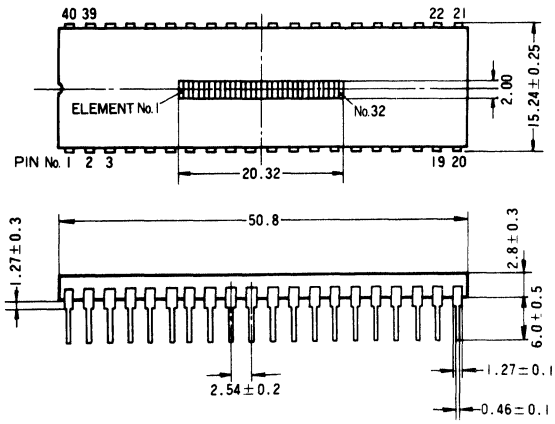

Pin Connection

PIN No.	1	2	3	4	5	6	7	8	9	10	11	12	13	14	15	16	17	18	19	20
ELEMENT No.	C	–	2	4	6	8	10	12	14	16	18	20	22	24	26	28	30	32	–	–

PIN No.	21	22	23	24	25	26	27	28	29	30	31	32	33	34	35	36	37	38	39	40
ELEMENT No.	C	–	31	29	27	25	23	21	19	17	15	13	11	9	7	5	3	1	–	–

(C=COMMON)

Details of Elements

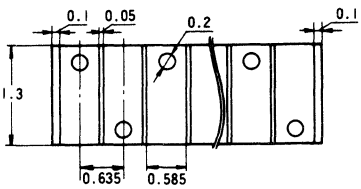

Cross Section of Side View

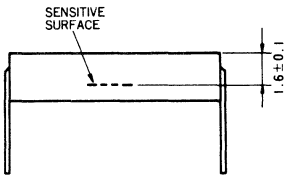

49. OUTLINE DRAWINGS

PA92

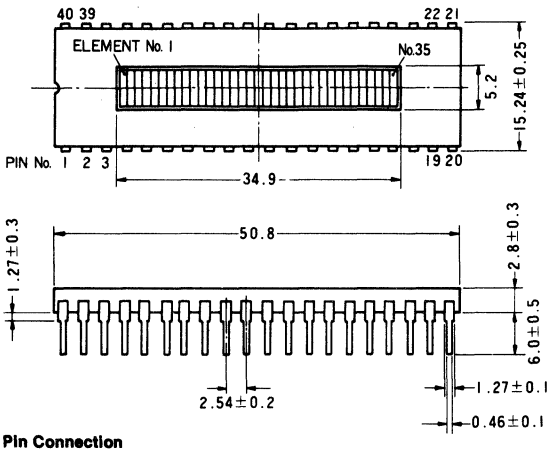

Details of Elements

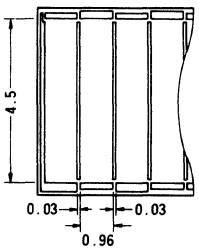

Pin Connection

PIN No. : 1 2 3 4 5 6 7 8 9 10 11 12 13 14 15 16 17 18 19 20 21 22 23
ELEMENT No. : C 2 4 6 8 10 12 14 16 18 – 20 22 24 26 28 30 32 34 – C 35 33

24 25 26 27 28 29 30 31 32 33 34 35 36 37 38 39 40
31 29 27 25 23 21 19 17 15 13 11 9 7 5 3 1 –

(C=COMMON)

Cross Section of Side View

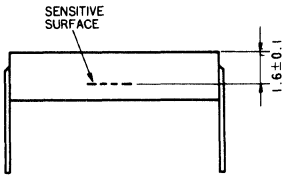

PA93

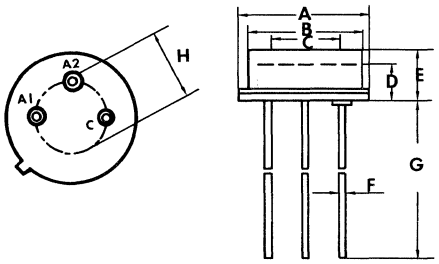

	A	B	C	D	E	F	G	H
PA93	.362 DIA	.319 DIA	.232 DIA	.075	.142	.018 DIA	.787	.200 DIA

PA94

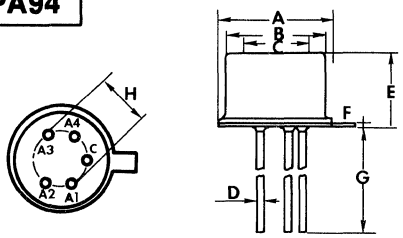

	A	B	C	D	E	F	G	H
PA94	.213 DIA	.185 DIA	.118 DIA	.013 DIA	.142	.008	.512	1.00 DIA

PA95

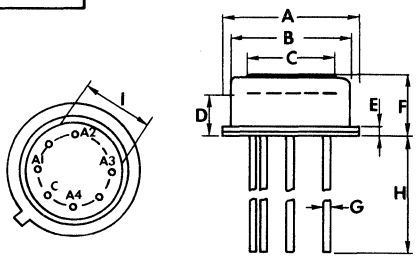

	A	B	C	D	E	F	G	H	I
PA95	.362 DIA	.319 DIA	.232 DIA	.114	.020	.161	.018 DIA	.571	.200

PA96

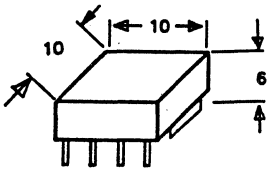

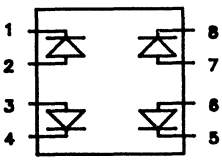

Dimensions in mm

PA100

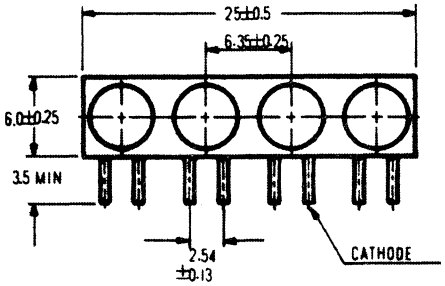

PA97

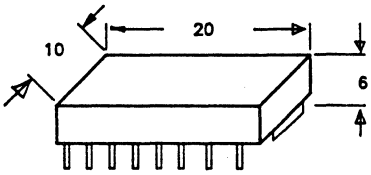

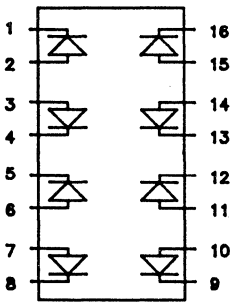

Dimensions in mm

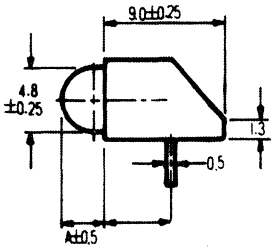

49. OUTLINE DRAWINGS

PA98

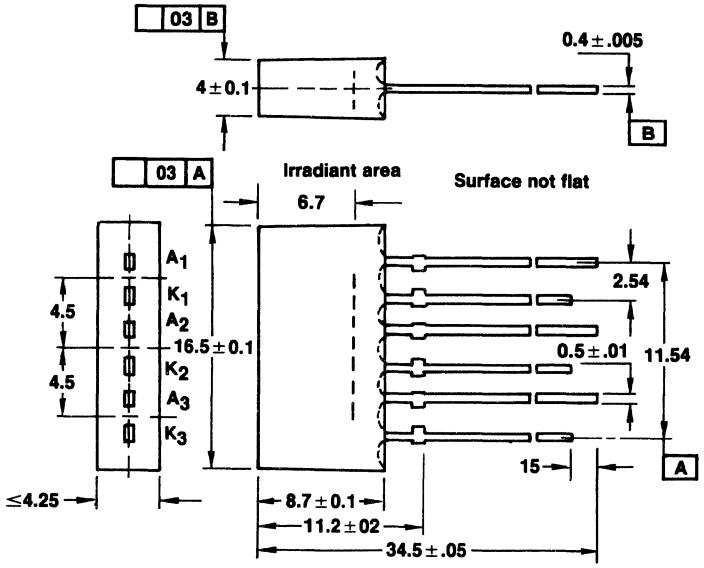

PA102

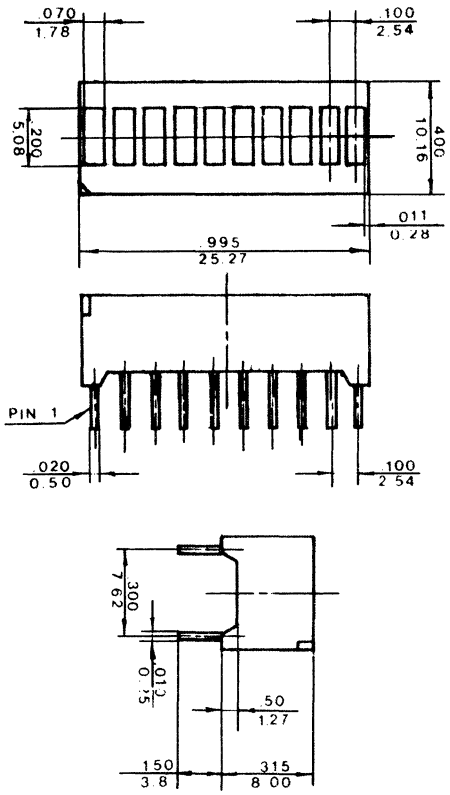

PA99

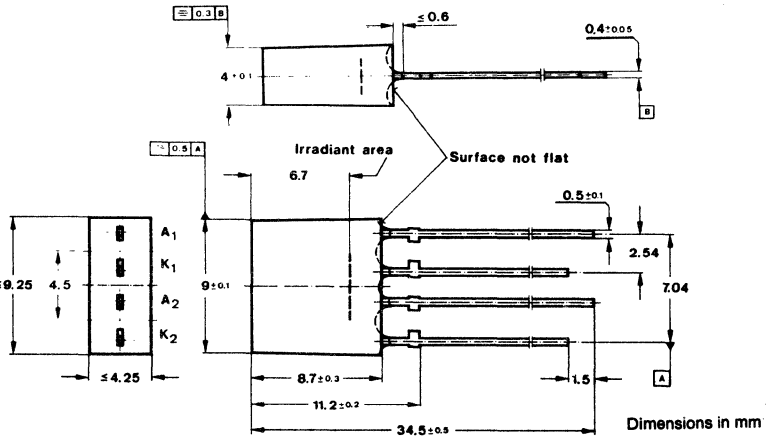

PA80

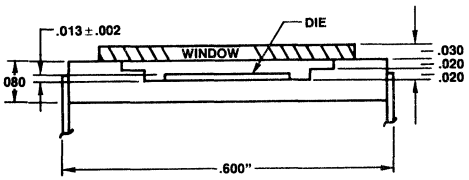

PA101

PIN CONNECTIONS

PIN NO	ELECTRICAL CONNECTIONS
1	Cathode 1
2	No. Pin
3	Anode 2
4	Cathode 2
5	NC
6	Anode 1

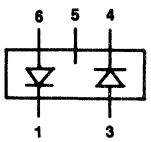

SCHEMATIC

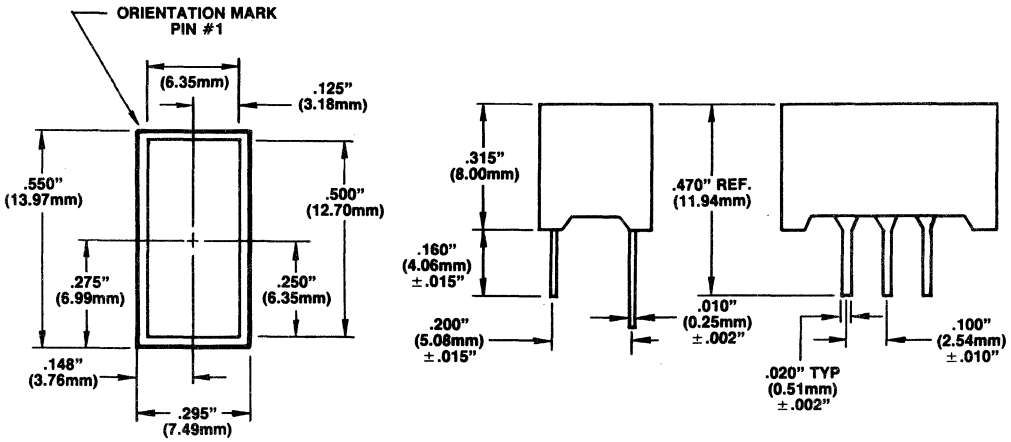

49. OUTLINE DRAWINGS

PA103

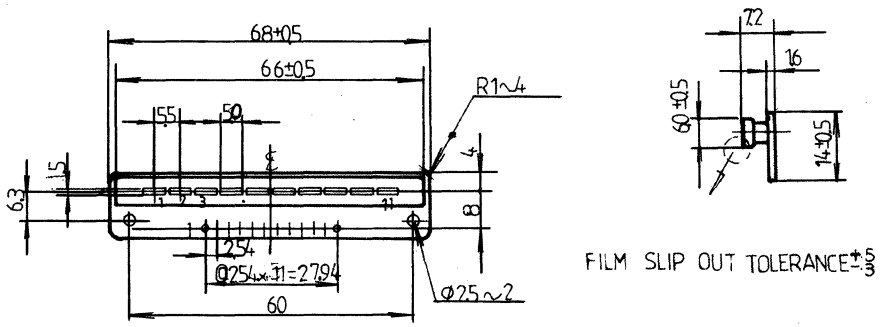

PA175

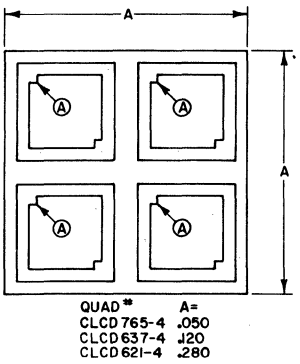

PA105

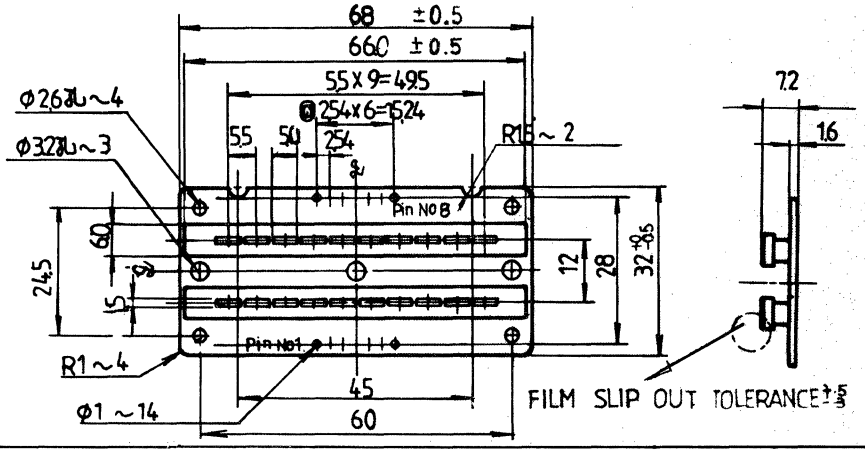

PA104

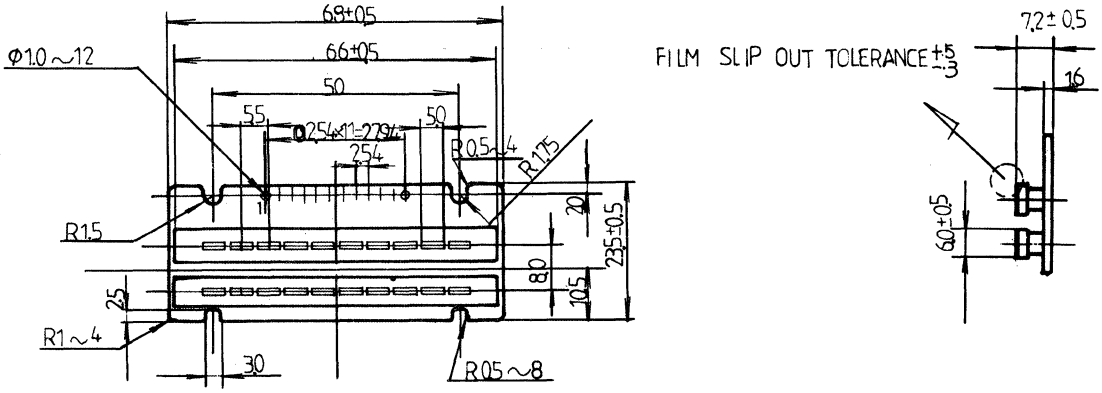

PA106

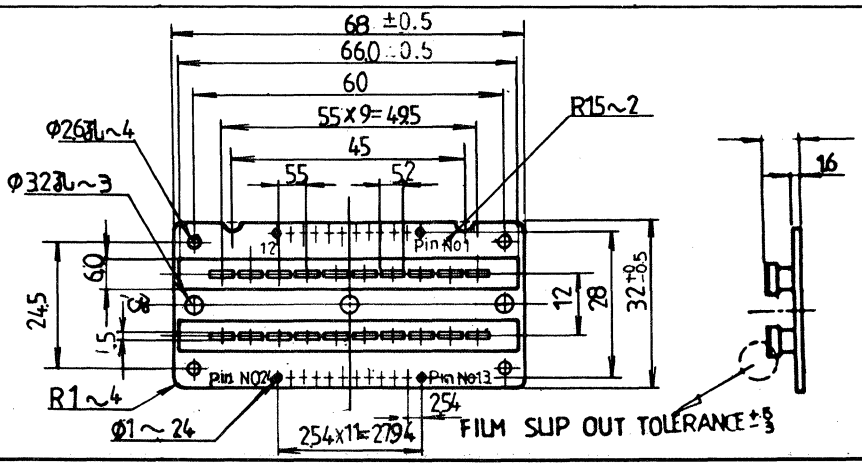

49. OUTLINE DRAWINGS

PA107

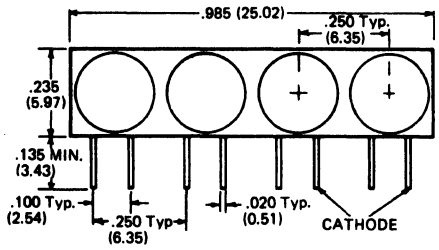

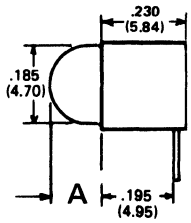

Suffix	A
PA107	.125
PA107a	.183

PA108

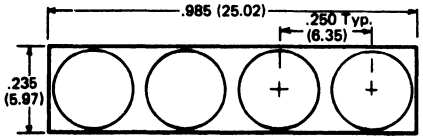

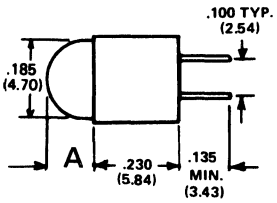

Suffix	A
PA108	.125
PA108a	.183

PA109

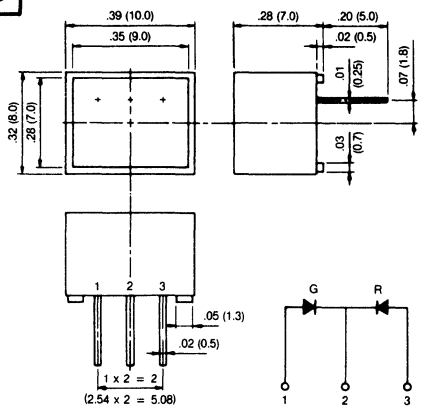

PA110

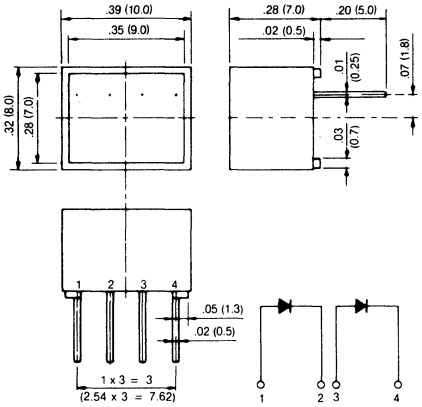

PA111

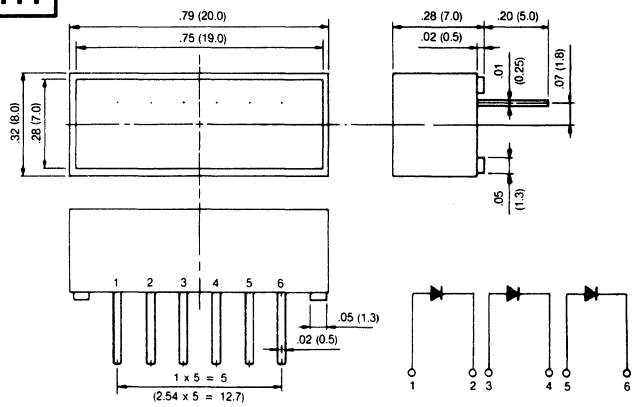

PA114

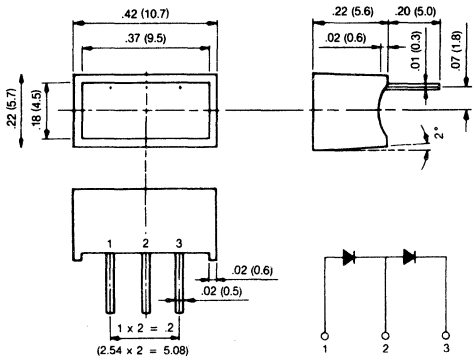

49. OUTLINE DRAWINGS

PA112

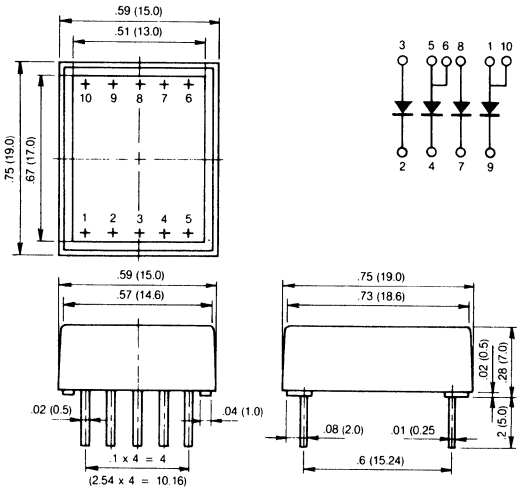

PA113

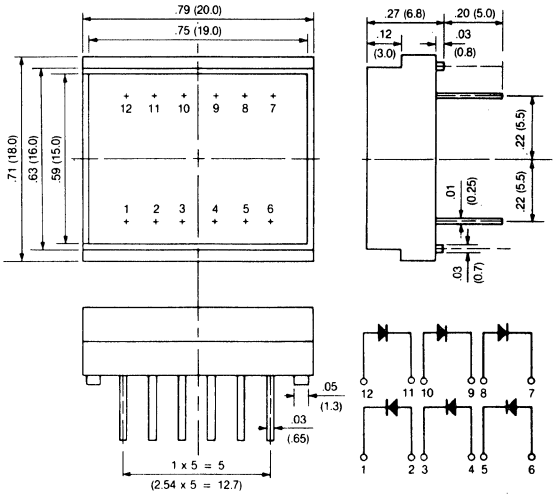

PA116

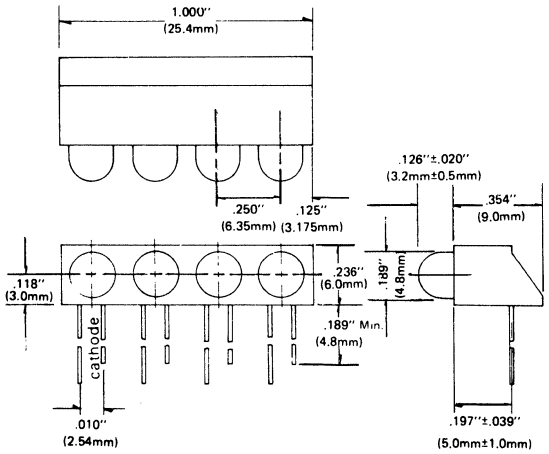

PA117

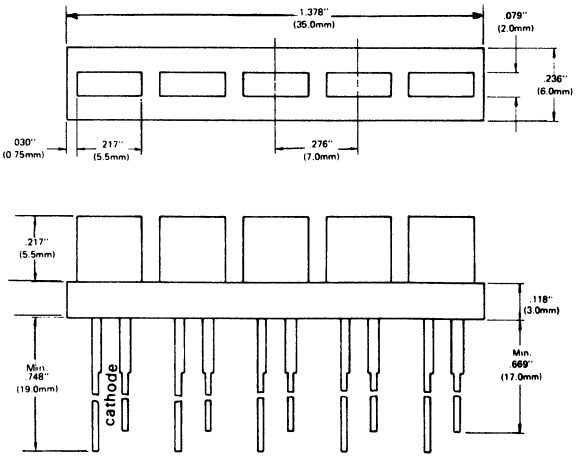

49. OUTLINE DRAWINGS

PA118

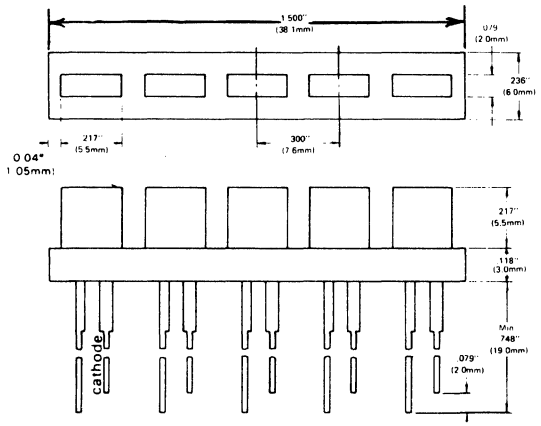

PA120

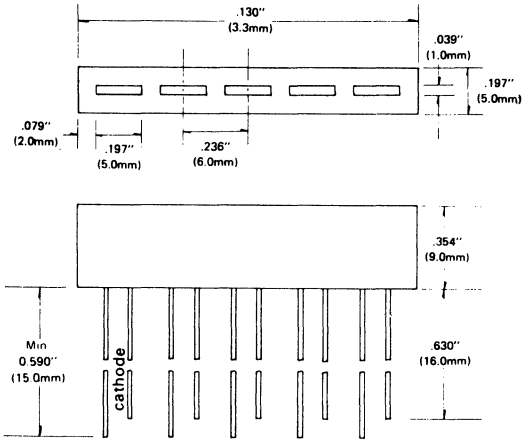

PA119

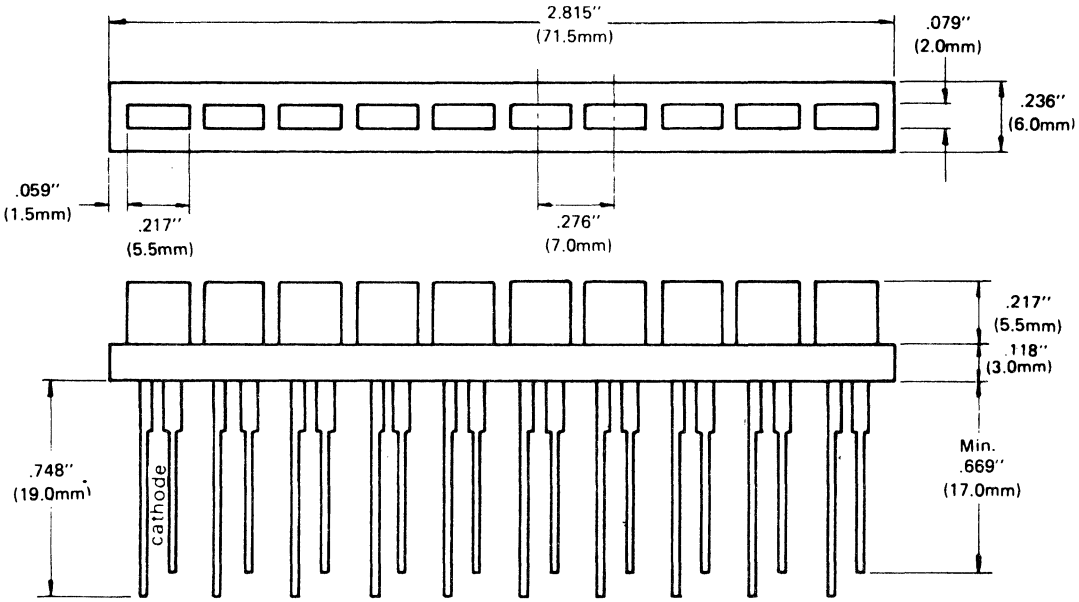

49. OUTLINE DRAWINGS

PA121

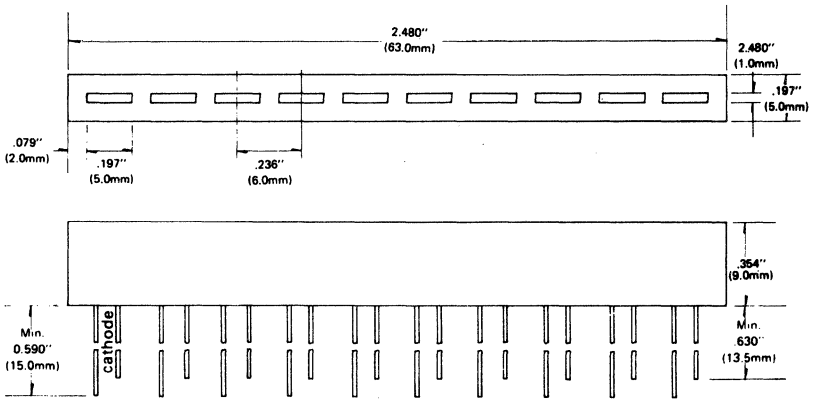

PA122

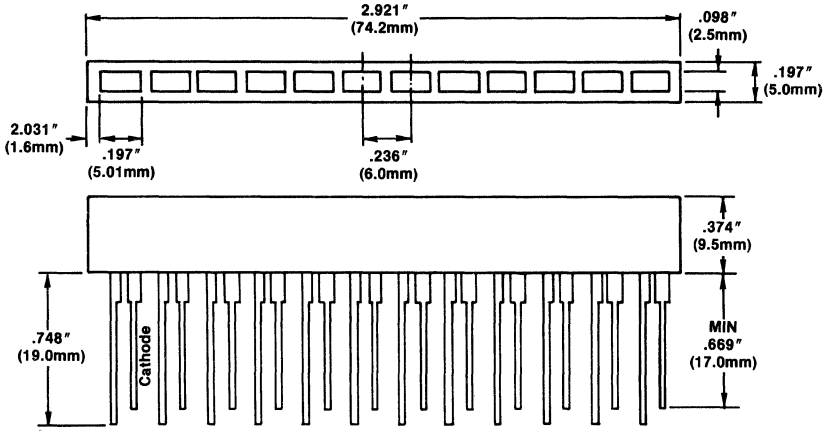

PA123

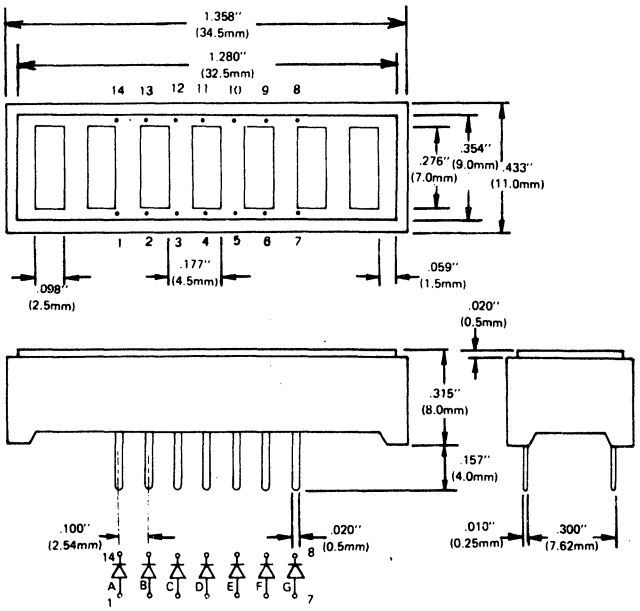

PA124

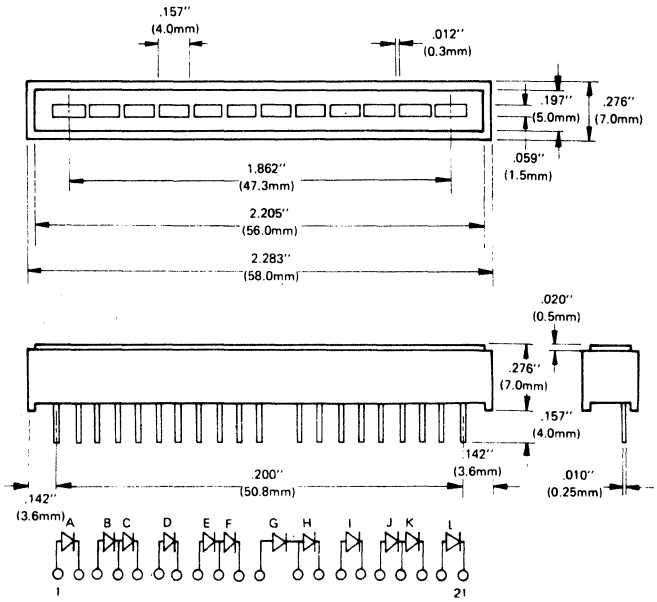

49. OUTLINE DRAWINGS

PA125

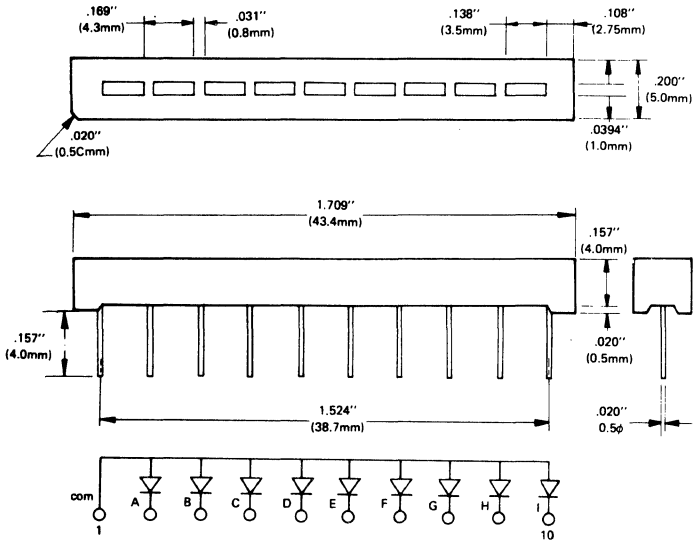

PA126

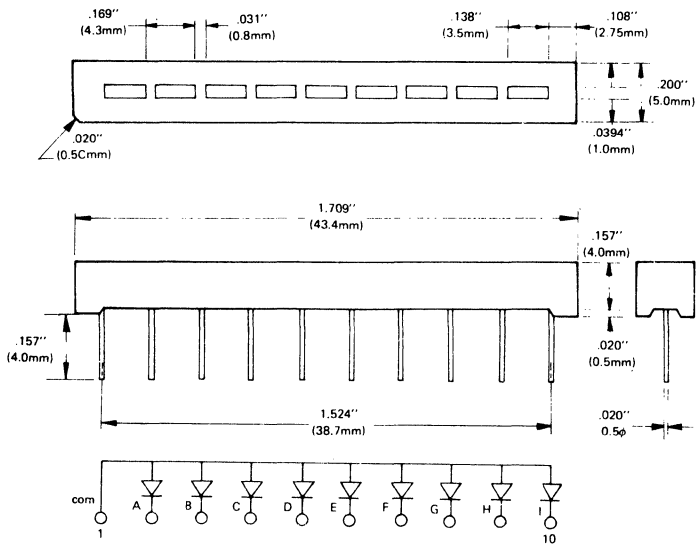

PA127

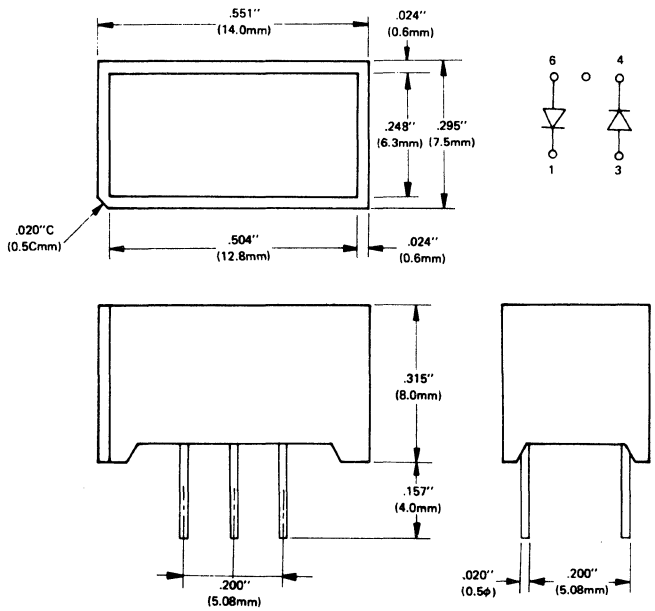

PA129

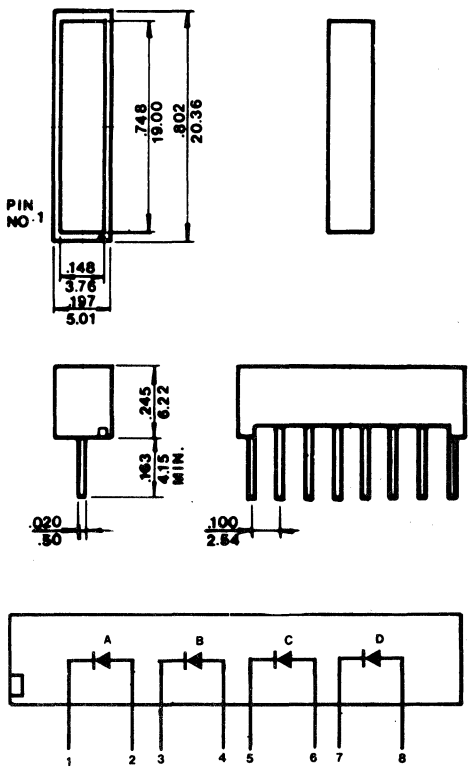

49. OUTLINE DRAWINGS

PA128

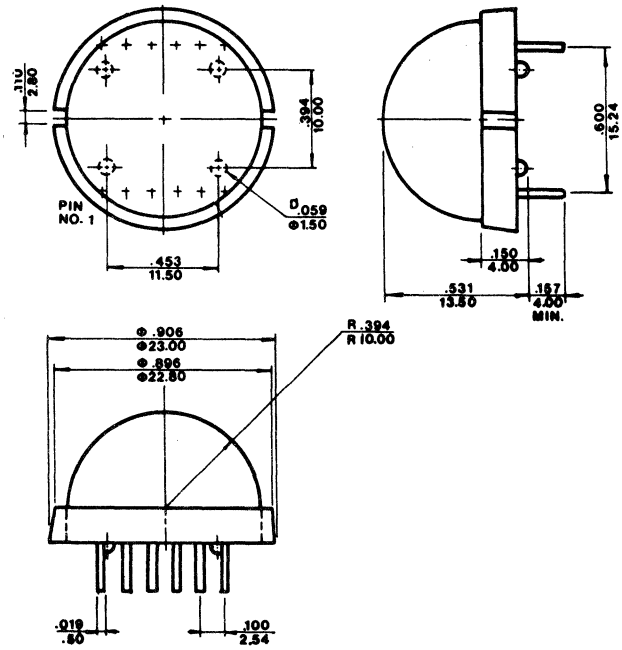

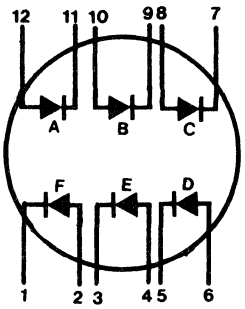

PA131

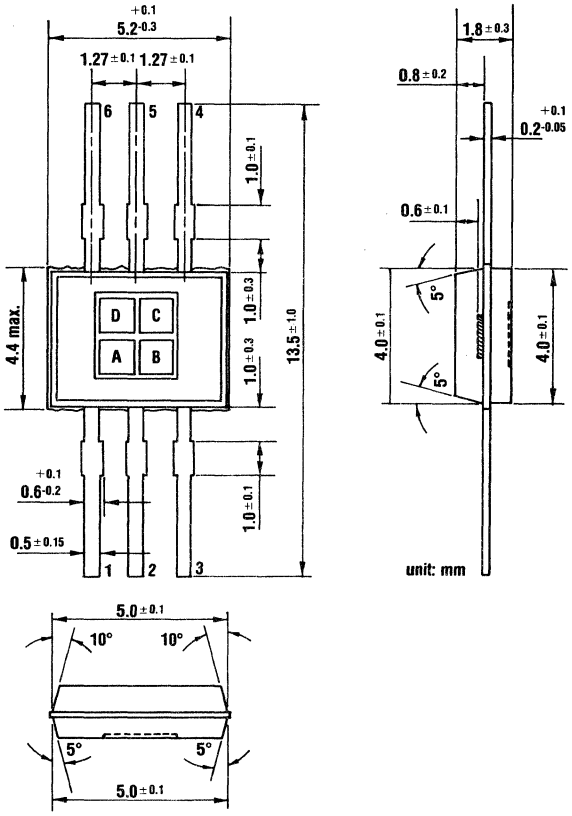

Pin No.	Connection
1	Anode A
2	Common Cathode
3	Anode B
4	Anode C
5	Common Cathode
6	Anode D

PA132

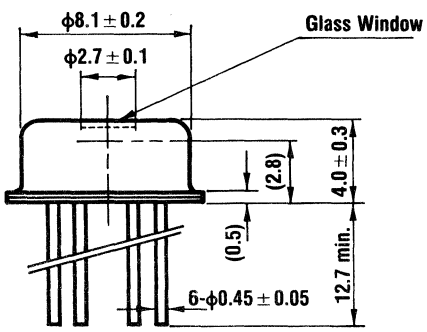

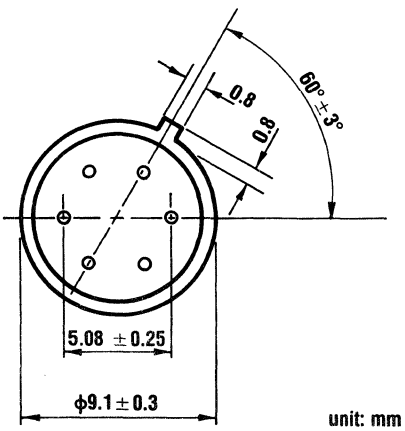

Pin No.	Connection
1	Common Cathode
2	Anode A
3	Anode B
4	NC
5	Anode C
6	Anode D

49. OUTLINE DRAWINGS

PA133

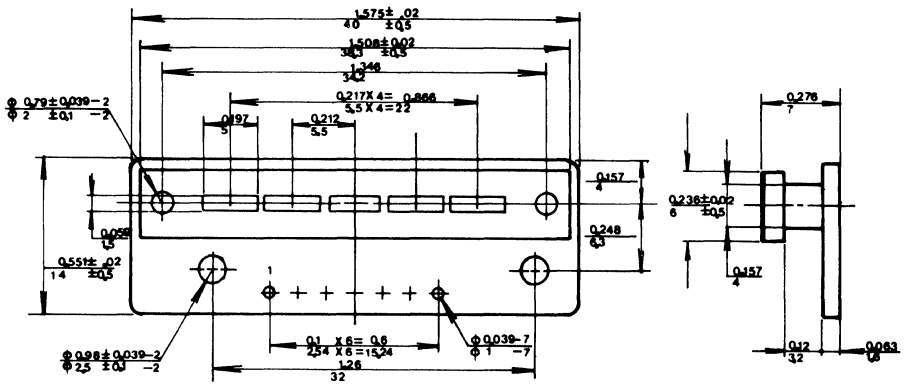

PA135

Multiple RA LEDs on a Bar

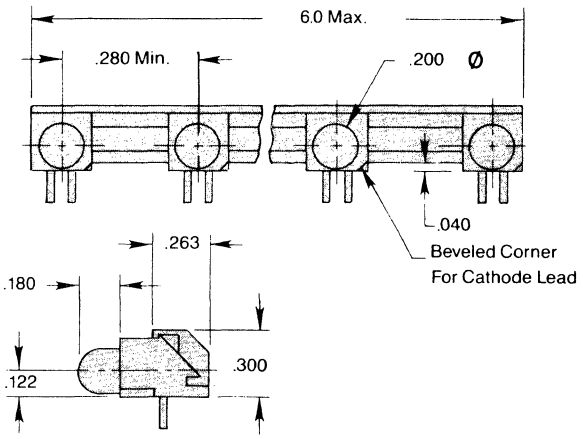

Individual RA LEDs

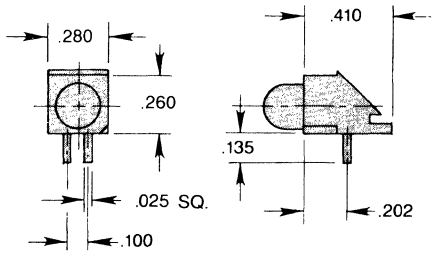

PA136

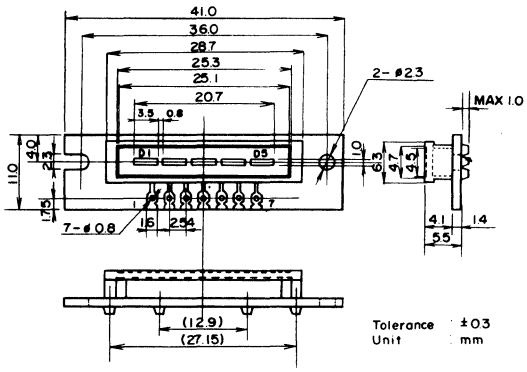

PIN NO.	ADDRESS	PIN NO.	ADDRESS
1	Common Anode	5	D_4 Cathode
2	D_1 Cathode	6	D_5 Cathode
3	D_2 Cathode	7	Common Anode
4	D_3 Cathode		

PA137

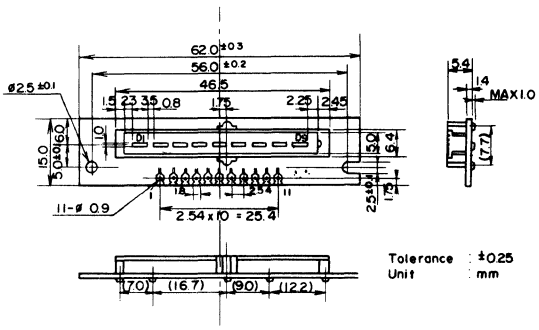

PIN NO.	ADDRESS	PIN NO.	ADDRESS
1	Common Anode	7	D_6 Cathode
2	D_1 Cathode	8	D_7 "
3	D_2 "	9	D_8 "
4	D_3 "	10	D_9 "
5	D_4 "	11	Common Anode
6	D_5 "		

49. OUTLINE DRAWINGS

PA138

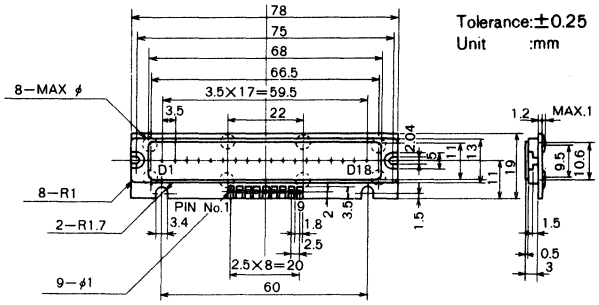

PIN NO.	ADDRESS
1	ANODE(D4, D8, D12, D16)
2	〃 (D3, D7, D11, D15)
3	〃 (D2, D6, D10, D14, D18)
4	〃 (D1, D5, D9, D13, D17)
5	COMMON CATHODE(D1~D4)
6	〃 (D5~D8)
7	〃 (D9~D12)
8	〃 (D13~D16)
9	〃 (D17~D18)

PA139

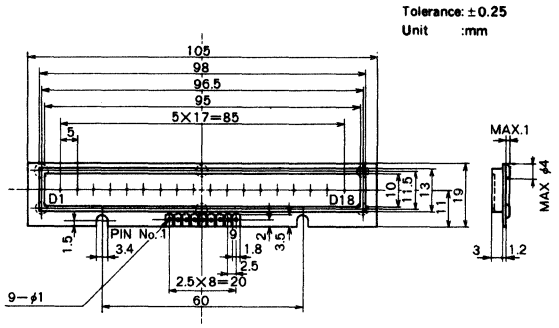

PIN NO.	ADDRESS
1	ANODE(D4, D8, D12, D16)
2	〃 (D3, D7, D11, D15)
3	〃 (D2, D6, D10, D14, D18)
4	〃 (D1, D5, D9, D13, D17)
5	COMMON CATHODE(D1~D4)
6	〃 (D5~D8)
7	〃 (D9~D12)
8	〃 (D13~D16)
9	〃 (D17~D18)

PA140

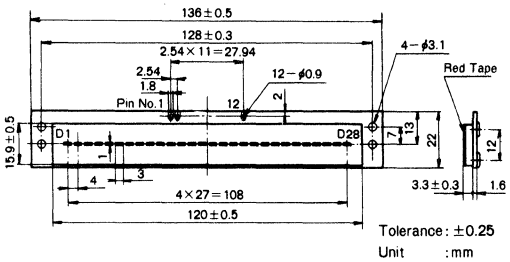

PIN NO.	ADDRESS
1	D1~D8 Common Anode
2	D9~D16 〃
3	D17~D24 〃
4	D25~D28 〃
5	Cathode(D1, D9, D17, D25)
6	〃 (D2, D10, D18, D26)
7	〃 (D3, D11, D19, D27)
8	〃 (D4, D12, D20, D28)
9	〃 (D5, D13, D21)
10	〃 (D6, D14, D22)
11	〃 (D7, D15, D23)
12	〃 (D8, D16, D24)

PA141

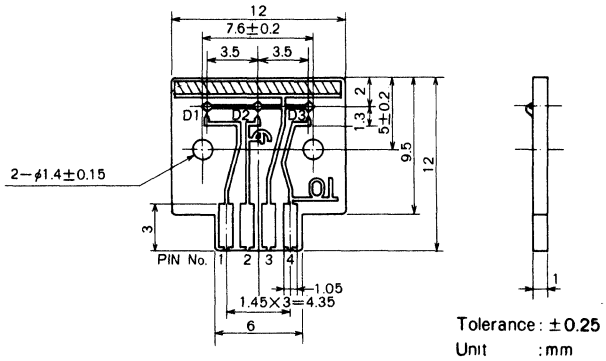

PIN NO.	ADDRESS
1	ANODE D1(RED)
2	ANODE D2(GREEN)
3	COMMON CATHODE
4	ANODE D3(RED)

49. OUTLINE DRAWINGS

PA143

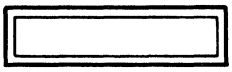

.2 x .8 x .24

Light Emitting Area:
.15 x .75

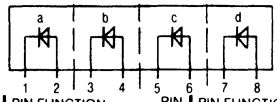

PIN	PIN FUNCTION	PIN	PIN FUNCTION
1	Cathode a	5	Cathode c
2	Anode a	6	Anode c
3	Anode b	7	Anode d
4	Cathode b	8	Cathode d

PA144

Light Emitting Areas:
.35 x .15

.4 x .4 x .24

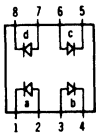

PIN	PIN FUNCTION
1	Cathode a
2	Anode a
3	Anode b
4	Cathode b
5	Cathode c
6	Anode c
7	Anode d
8	Cathode d

PA146

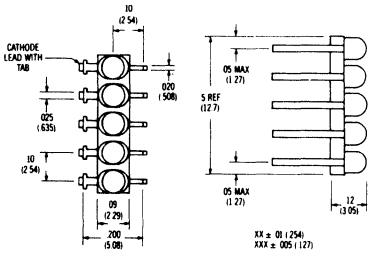

PA147

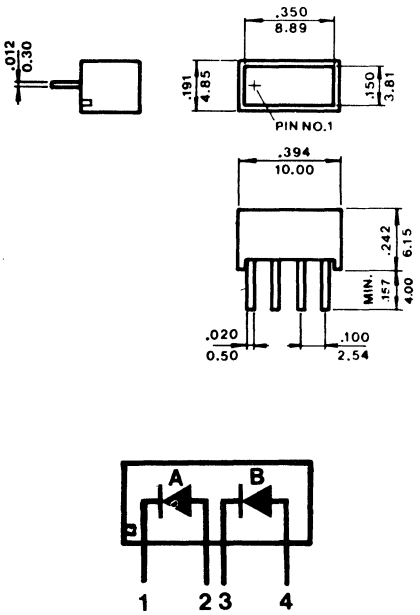

PA148

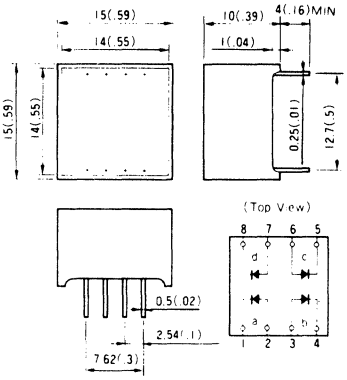

PA149

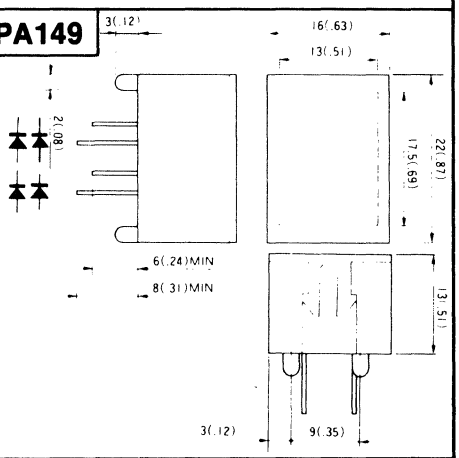

PA150

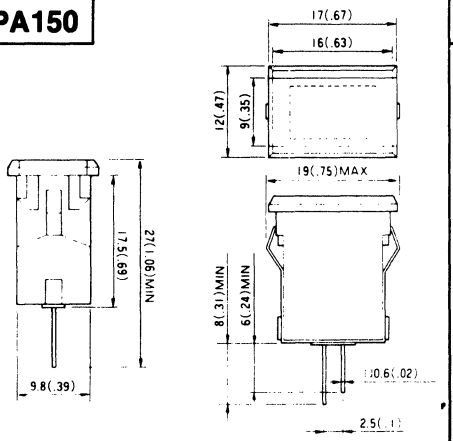

PA151

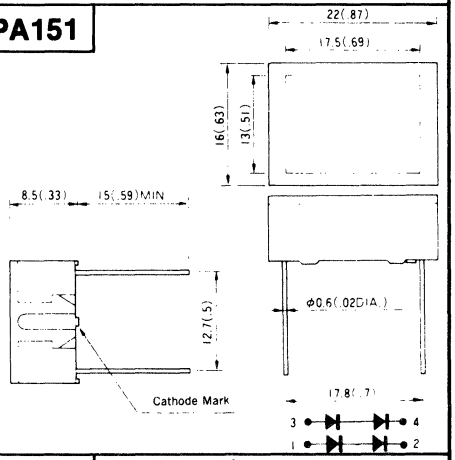

PA152

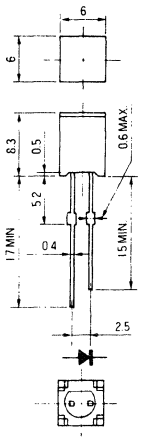

PA153

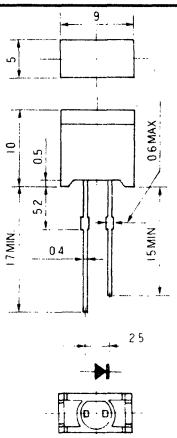

PA154

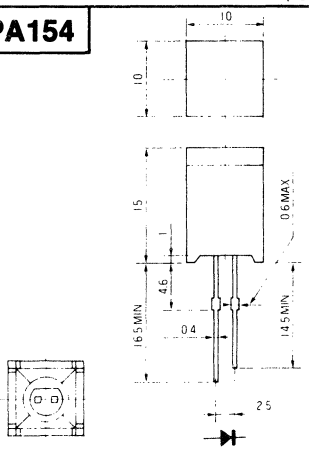

49. OUTLINE DRAWINGS

PA155

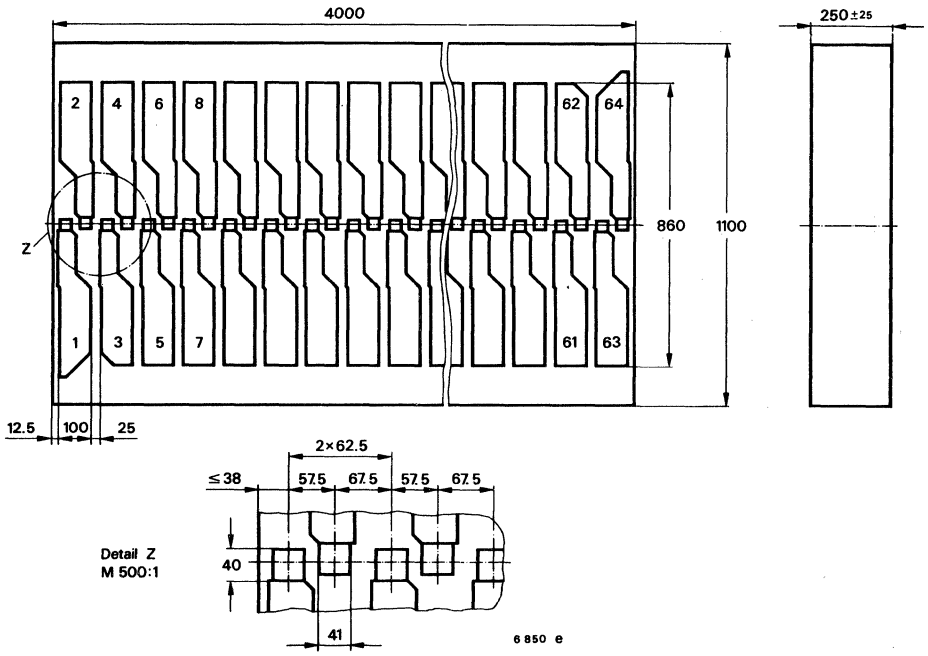

PA156

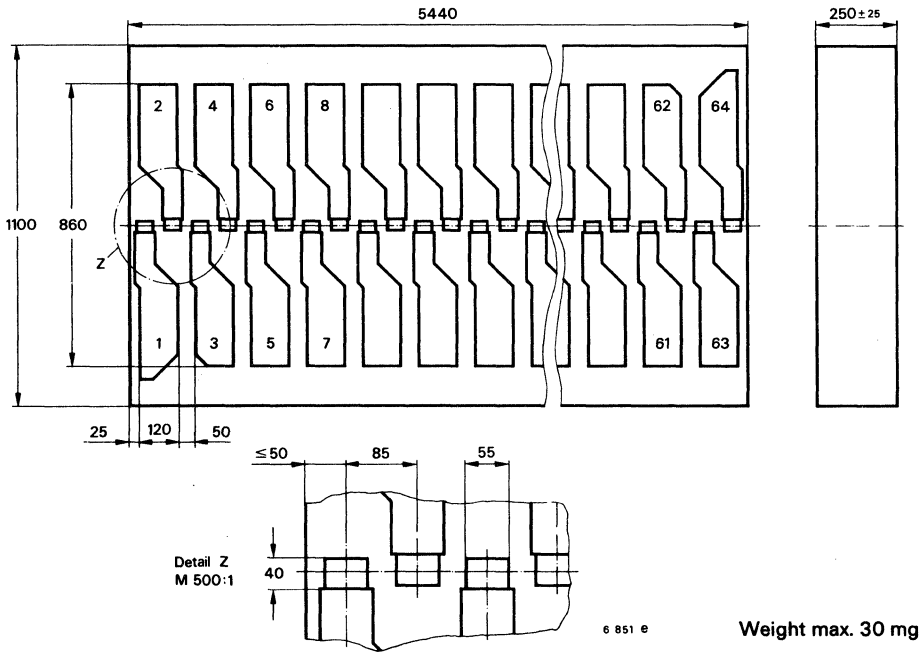

Weight max. 30 mg

49. OUTLINE DRAWINGS

PA157

Dimensions in mm

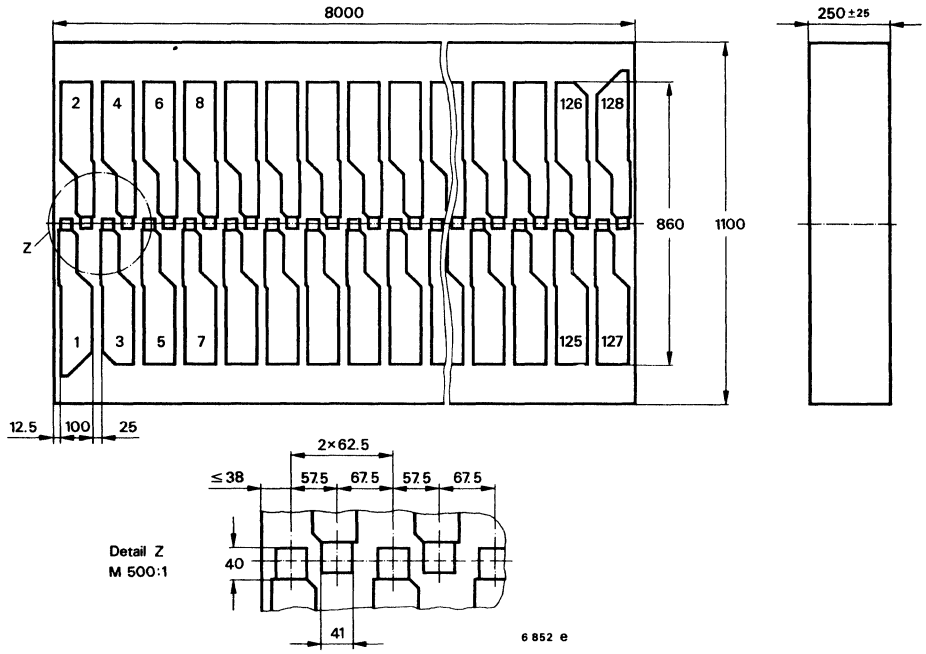

PA158

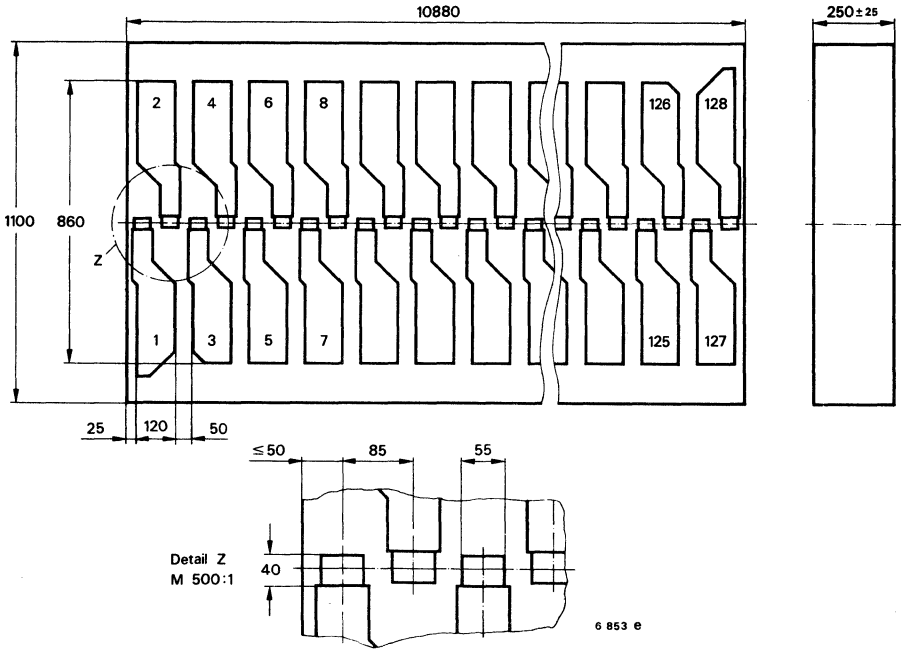

49. OUTLINE DRAWINGS

PA159

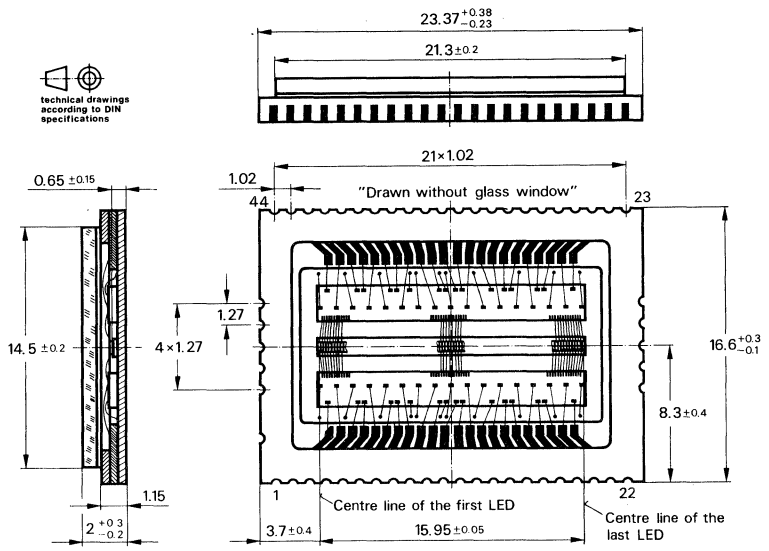

PA160

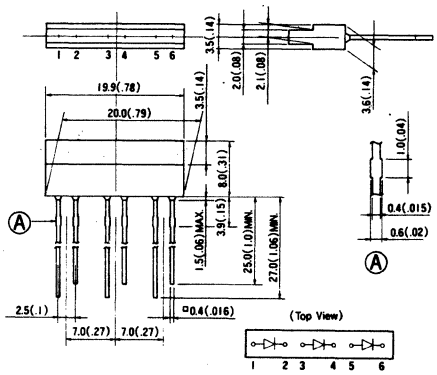

PA161

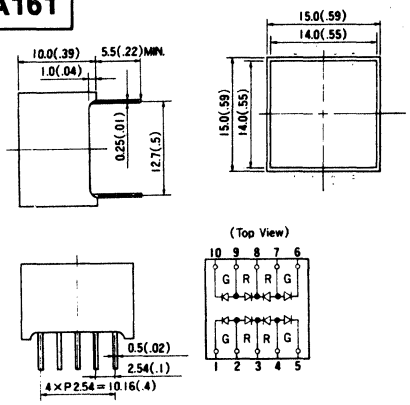

PA162

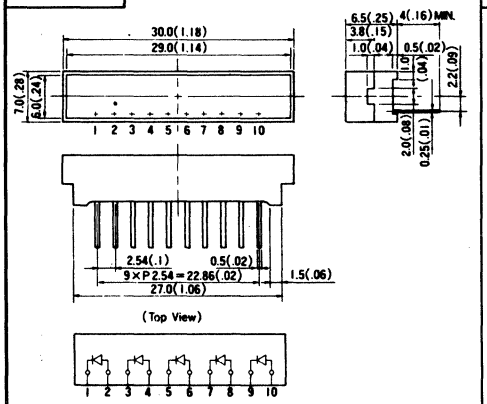

PA163

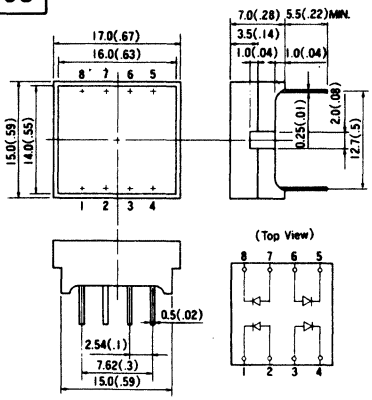

PA163a

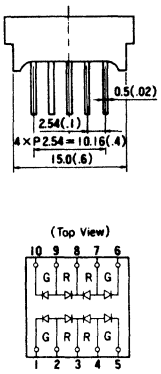

PA164

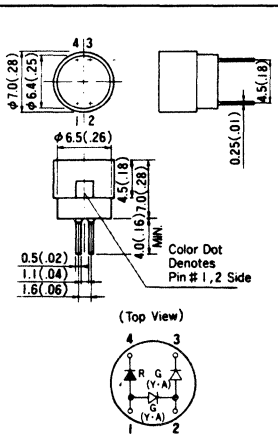

PA165

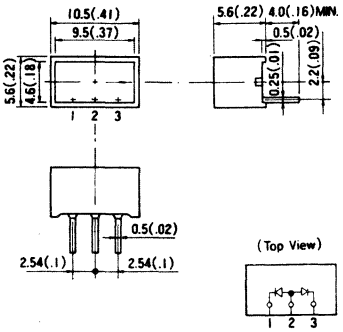

PA166

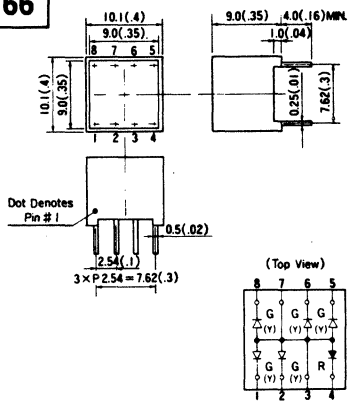

49. OUTLINE DRAWINGS

PA167

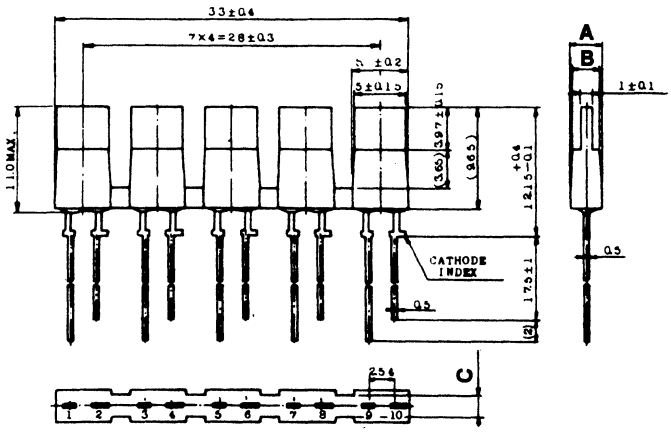

Suffix	A	B	C
PA167	3±0.2	2.6	2±0.2
PA167a	4±0.2	3.6	3±0.3

PA168

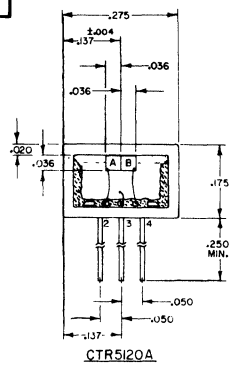

PA169

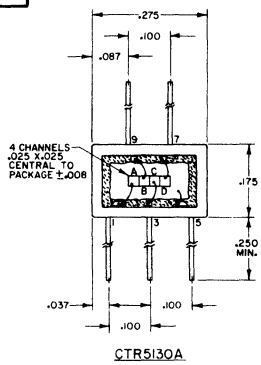

PA170

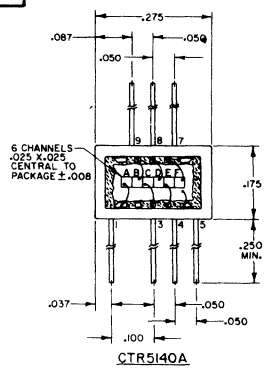

PA171

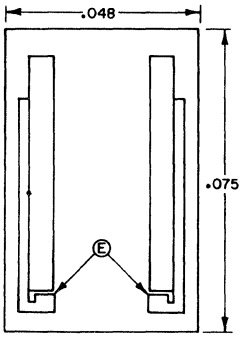

PA172

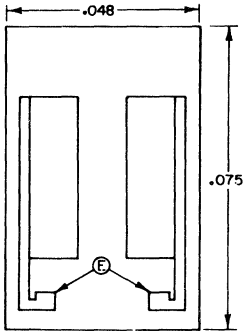

PA173

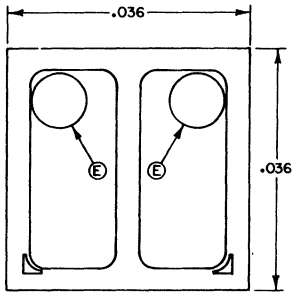

PA174

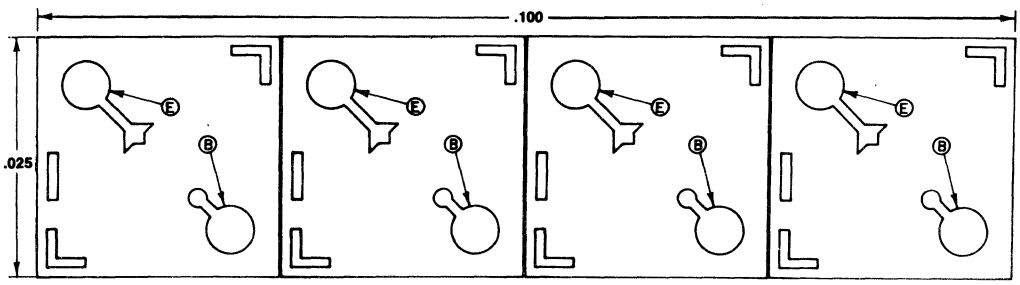

49. OUTLINE DRAWINGS

PA176

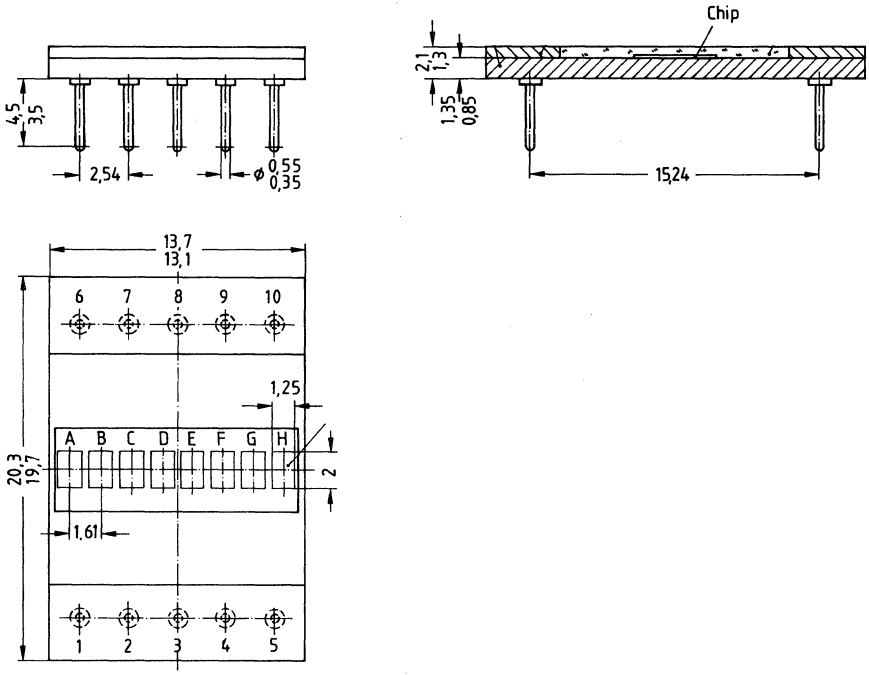

PA177

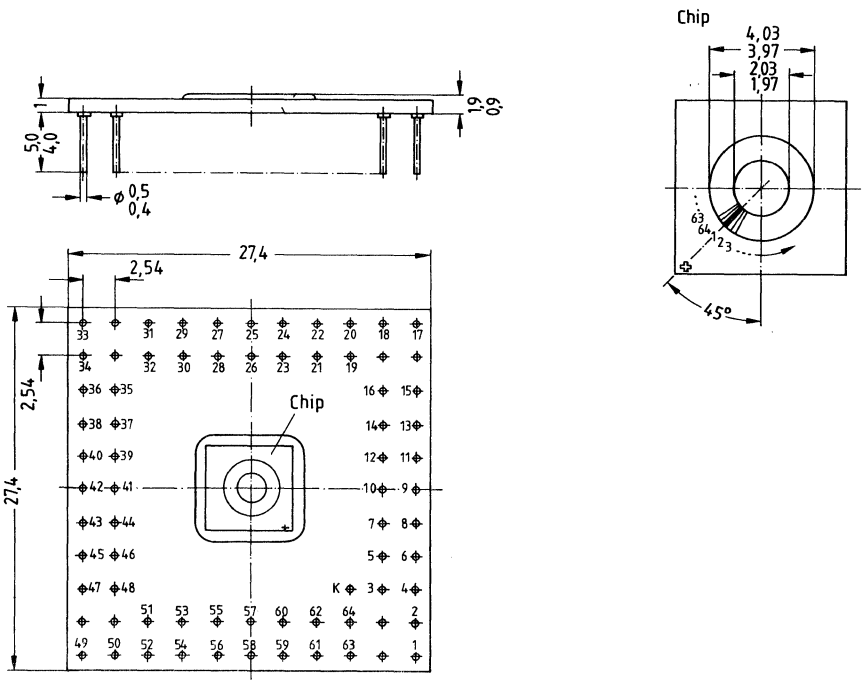

49. OUTLINE DRAWINGS

PC1

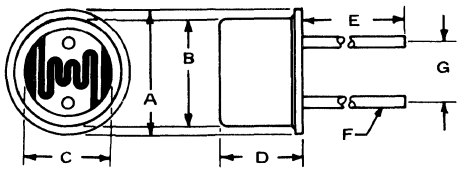

	A	B	C	D	E	F	G
PC1	.210	.183	.155	.140 .154	1.500 1.530	.016 .019	.100
PC1a	.550	.486	.430	.190 .230	1.500 1.530	.019	.295
PC1b	.540 .560	.481 .491	.425 .435	.174 .204	1.25 1.50	.015 .019	.295 NOM

PC2

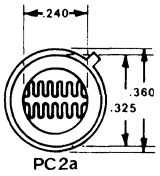

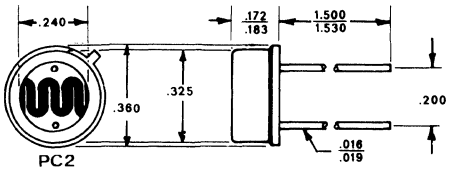

PC3

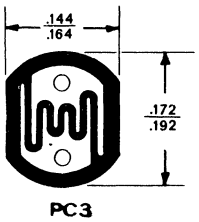

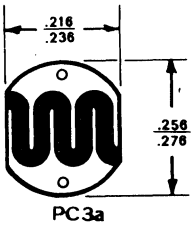

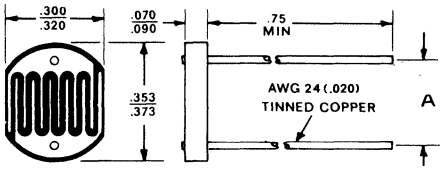

	A
PC3	.090 .110
PC3a	.190 .210
PC3b	.255 .275

PC4

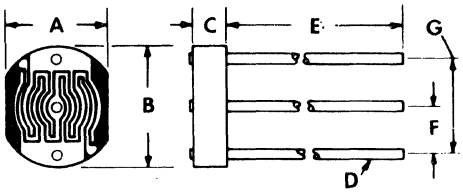

	A	B	C	D	E	F	G
PC4	.216 .236	.256 .276	.070 .090	.020	.75 MIN	.095 .105	.190 .210
PC4a	.217 .237	.256 .276	.075 .100		1.437 MIN	.095 .105	.195 .205

PC5

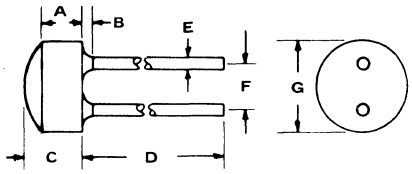

	A	B	C	D	E	F	G
PC5	.240 REF	.060 MAX	.330 MAX	.750 MIN	.014 .021	.265	.520
PC5a		NA	.157	.401 MIN	.016 .021	.100	.209

PC8

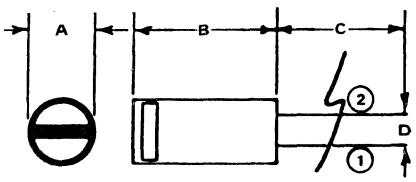

	A	B	C	D
PC8	.235 .250	.500 .531	1.469 1.531	.100
PC8a	.078	.157	1.181	

PC9

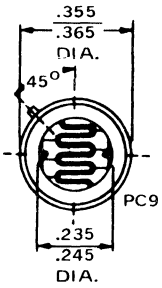

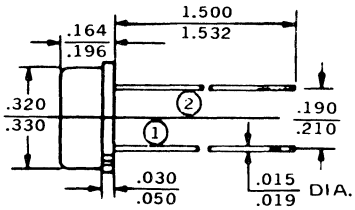

PC10

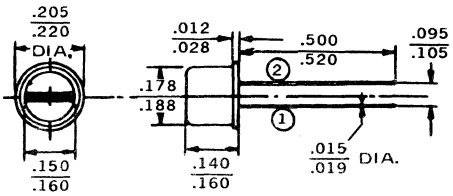

PC11

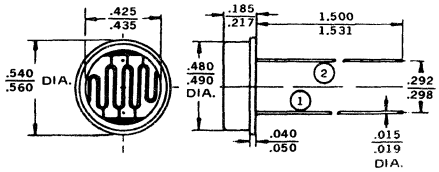

PC13

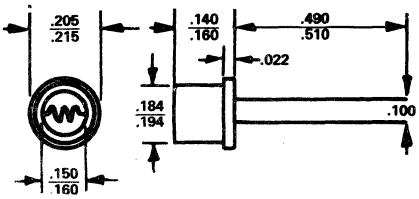

49. OUTLINE DRAWINGS

PC14

	TYPE SERIES	D	H
PC14	4H	.208	.134
	5H	.256	.138
	7H	.363	.170
	MKY-7H	.363	.142
	MKB-7H	.363	.142
	12H	.59	.185
	25H	1.24	.304
	25R	1.16	.375
	5C	.197	.138
	7C	.319	.165
	12C	.473	.083
	25C	.985	.114

PC15

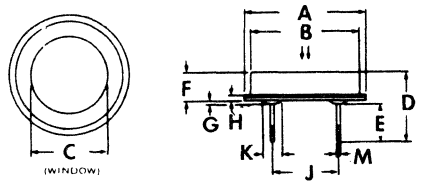

	A	B	C	D	E	F	G	H	J	K	M
PC15	1.220 1.259	1.094 1.110	.787 .818	.897 MAX	.393 MIN	.261 .289	.039 MAX	.029 .049	.734 .761	.196 MAX	.036 .041
PC15a	1.25	1.094	.812	.594		.265	.025			.187	.040
PC15b	1.247 1.260	1.097 1.103	.810 .820		.442 .461	.257 .273	.042 .055	.040 .051	.745 .755	.180 .187	.038 .042

PC17

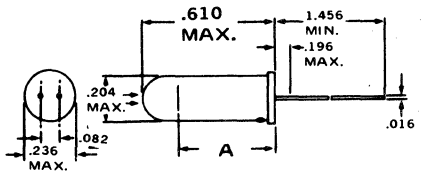

	A
PC17	.393 .551
PC17a	.413 .492

PC21

	A	B	C	D	E	F
PC21	.208 MAX	.208 MAX	1.456 MIN	.015	.099	.055 MAX
PC21a	.185 .208	.185 .208	1.456 1.535	.020	.099	.035 .051

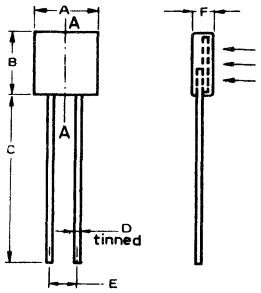

IF IT IS REQUIRED FOR ANY APPLICATION THAT THE DEVICE IS PARTLY SHADED, THE SHADOW LINE SHOULD BE PERPENDICULAR TO THE AXIS A-A OF THE DEVICE.

PC39

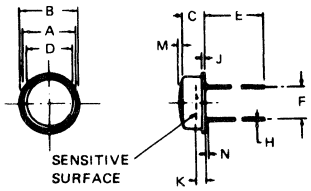

	A	B	C	D	E	F	H	J	K	M	N
PC39	.480 .492	.542 .557	.180 .198	.423 .437	1.50 NOM	.292 .298	.016 .019	.021 .035	.080 .100	.022 .032	.020 .028
PC39a	.182 .193	.205 .215	.140 .150	.150 .160	1.50 NOM	.096 .104	.016 .019	.015 .025	.068 .080	.005 .015	.010 .020
PC39b	.245 .265	.290 .302	.171 .183	.173 .182	1.50 NOM	.171 .178	.016 .018	.056 .064	.083 .090		
PC39c	.493 .507		.243 .257	.458 .472	1.594 TYP.	.288 .302	.023 .027		.158 .172		
PC39d	.481 .491	.545 .555	.182 .196		1.50 1.60	.290 .300	.016 .019	.025	.082 .098		.030 .040

PC40

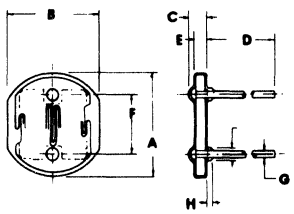

	A	B	C	D	E	F	G	H
PC40	.434 .444	.390 .400	.050 .060	1.37 NOM	.039 .049	.288 .302	.024 .026	.020 .030
PC40a	.434 .444	.390 .400	.050 .060	1.25 MIN		.288 .302	.024 .026	.030 MAX
PC40b	1.014 1.024	.855 .865	.097 .107	.531 .594	.087 MAX	.742 .758	.044 .046	.020 .030

PC41

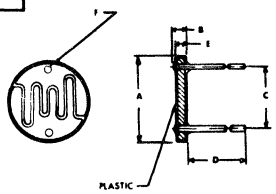

Dims.	Inches		Millimeters	
Ref	Min.	Max.	Min.	Max.
A	.152	.162	3.86	4.11
B	.039	.049	.99	1.26
C	.096	.104	2.46	2.64
D	1.53 Nominal		38.9 Nominal	
E		.038		.966
F	024	.026	.61	.66

PC42

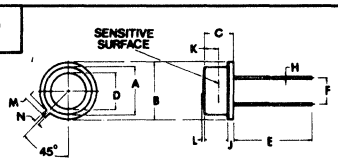

	Inches		Millimetres	
Ref.	Min.	Max.	Min.	Max.
A	.320	.330	8.15	8.35
B	.355	.365	9.05	9.25
C	.173	.182	4.40	4.62
D	.235	.245	5.98	6.22
E	1.50	1.56	38.00	39.80
F	.195	.205	4.80	5.20
H	.016	.019	.409	.482
J	.036	.043	.92	1.10
K	.075	.098	1.90	2.50
L	−.010	+.010	−.26	+.26
M	.035	.045	.90	1.15
N	.026	.036	.68	.92

49. OUTLINE DRAWINGS

PC45

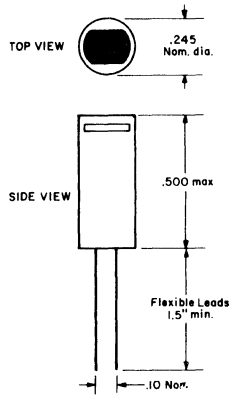

PC46

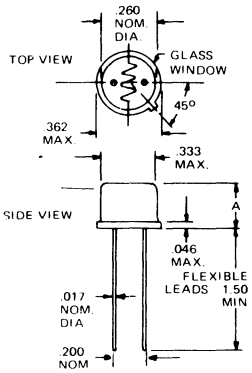

	A
PC46	.276 MAX
PC46a	.175 MAX

PC47

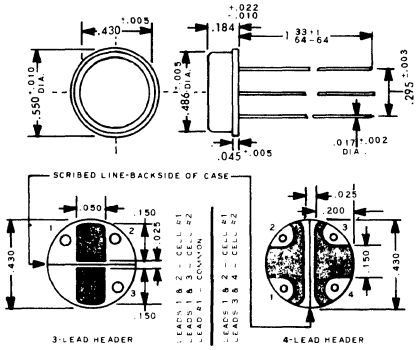

PC48

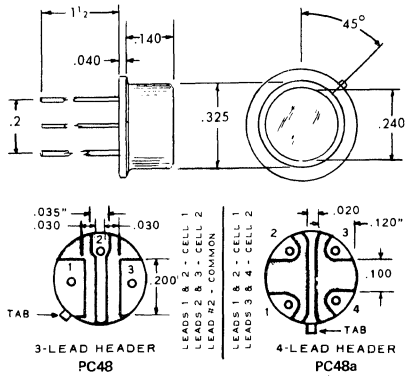

PC52

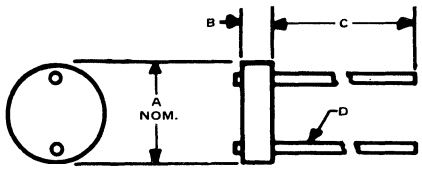

	A	B	C	D
PC52	.210	.030	1.00	.018
PC52a	.265	.030	1.00	.018
PC52b	.465	.090	1.00	.018

PC53

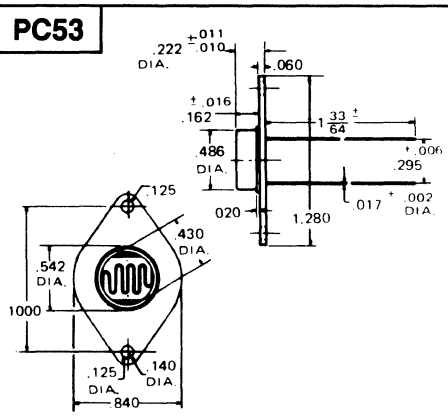

PC55

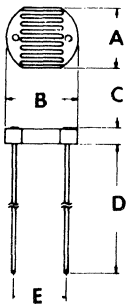

	A	B	C	D	E
PC55	.300 .320	.350 .370	.065 .090	1.437 MIN	.260 .270
PC55a	.128 .148	.155 .175	.045 .070	1.437 MIN	.095 .105
PC55b	.365 .385	.415 .435	.120 .145	1.437 MIN	.290 .300
PC55c	.238 .258	.273 .293	.065 .090	1.437 MIN	.195 .205
PC55d	.161 .177	.192 .208	.066 .082	.984 1.14	.133 Typ
PC55e	.224 .240	.267 .283	.066 .082	.984 1.14	.196 Typ
PC55f	.326 .342	.389 .405	.098 MAX	.984 1.14	.299 Typ

49. OUTLINE DRAWINGS

PC58

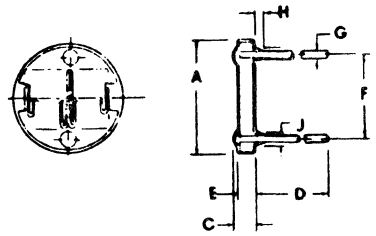

Dims.	Inches		Millimetres	
Ref.	Min.	Max.	Min.	Max.
A	.265	.275	6.72	6.99
C	.039	.049	1.00	1.20
D	1.375		34.93	
E	.028	.038	.712	.968
F	.195	.205	4.975	5.205
G	.024	.026	.61	.661
H	.020	.030	.51	.762
J	.035	.045	.90	1.15

PC60

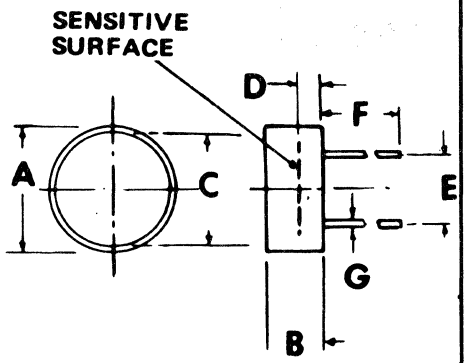

	A	B	C	D	E	F	G	NOTE
PC60	.493 .507	.243 .257	.458 .472	.158 .172	.288 .302	1.125 MIN	.023 .027	
PC60a	.490 .510	.240 .260		.156 .175	.365 .385	1.187 MIN	.023 .027	
PC60b	.493 .513	.243 .257	.458 .472	.158 .172	.288 .302	1.12 NOM	.023 .027	Glass Window

PC63

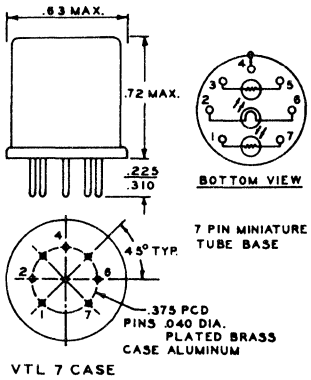

PC64

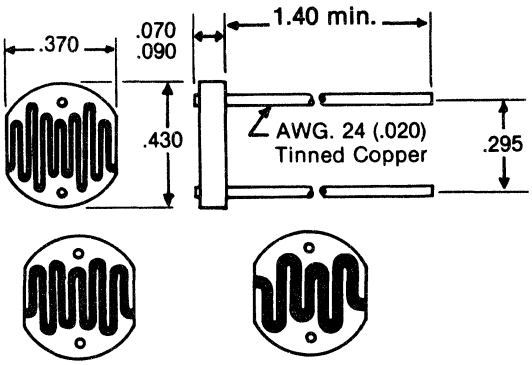

PC65

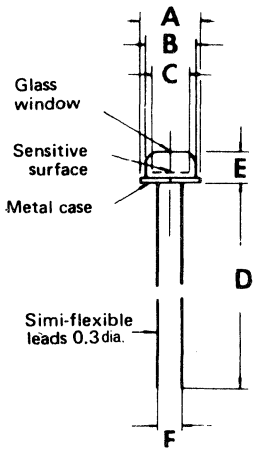

	A	B	C	D	E	F
PC65	.244 .267	.212 .220	.129 .145	1.18 MIN	.133 .149	.133 TYP
PC65a	.346 .370	.314 .322	.224 .240	1.18 MIN	.129 .145	.196 TYP
PC65b	.531 .555	.480 .496	.417 .440	1.18 MIN	.192 .216	.295 TYP

PC66

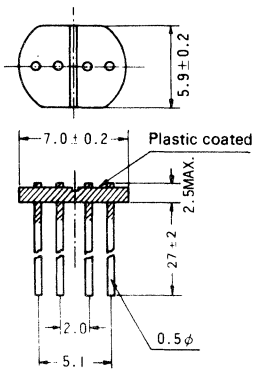

PC67

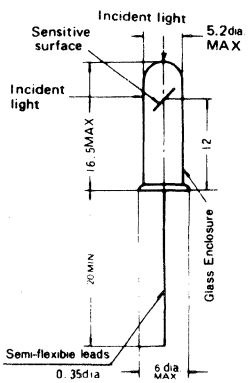

49. OUTLINE DRAWINGS

PC68

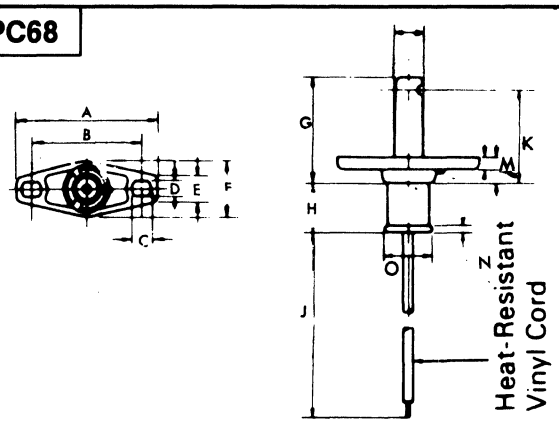

	A	B	C	D	E	F	G	H	J	K	L	M	N	O
PC68	1.73	1.33	.255 TYP	.177 TYP	.314 TYP	.669 TYP	1.33	.590	15.7 17.7	1.14	.362 MAX	.314	.078	.510
PC68a	1.73	1.33	.255 TYP	.177 TYP	.314 TYP	.669 TYP	.866	.905	15.7 17.7		.374 MAX	.314	.078	.510
PC68b	1.73	1.33	.236 TYP	.177 TYP	.314 TYP	.708 TYP	1.02	.787	11.8 13.7		.314			.708

PC69

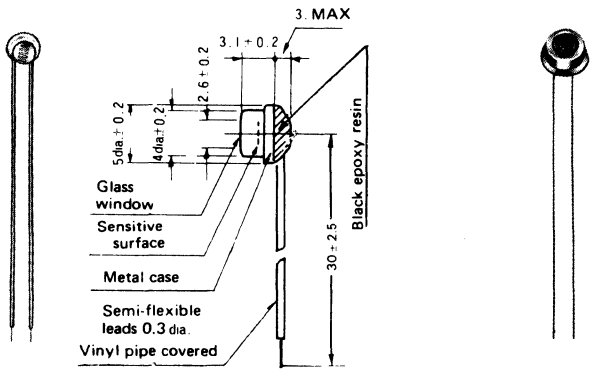

PC70

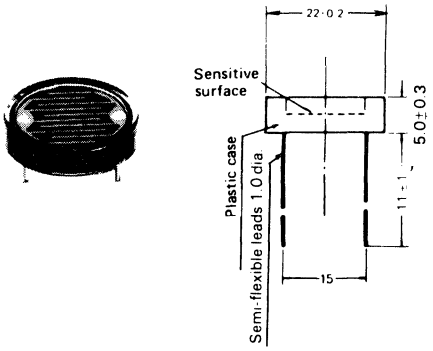

PC71

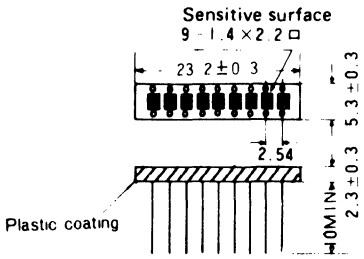

PC72

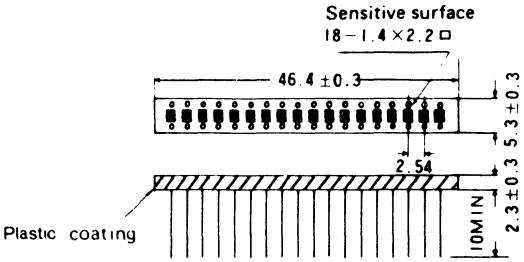

PC73

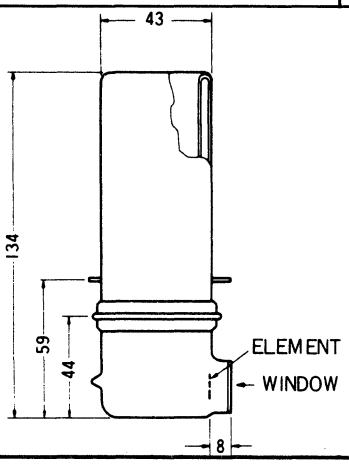

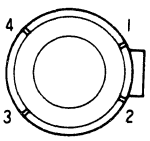

1. PbS or PbSe
2. PbS or PbSe
3. GETTER PIN
4. GETTER PIN

PC74

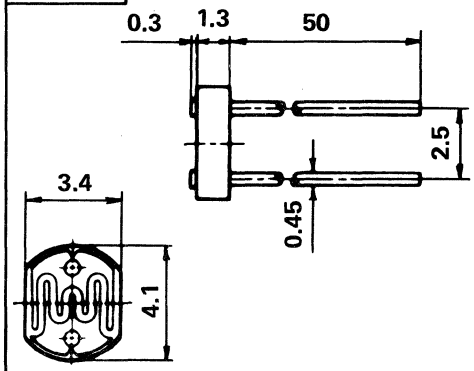

Dimensions in mm

49. OUTLINE DRAWINGS

PC75

	A	B	C	D	E	F
PC75	5.2	3.7	2.0	25	3.4	0.35
PC75a	8.3	4.3	3.0	25	5.0	0.4

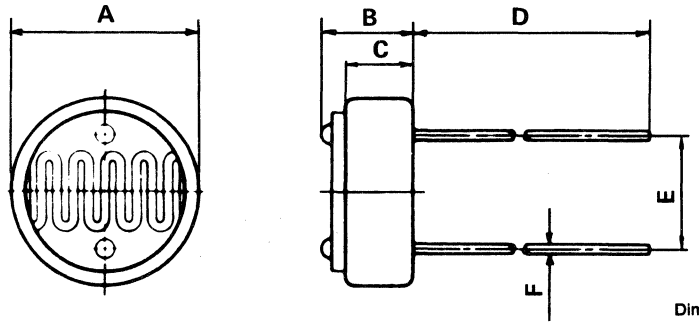

Dimensions in mm

PC76

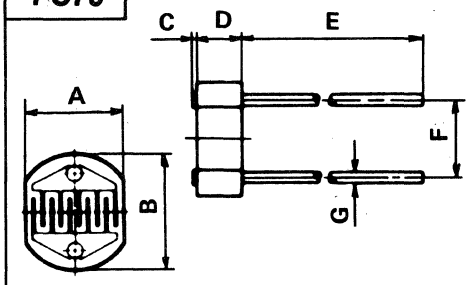

	A	B	C	D	E	F	G
PC76	5.9	7.0	0.3	2.0	30	5.0	0.48
PC76a	4.3	5.1	0.3	2.0	30	3.4	0.48

Dimensions in mm

PC77

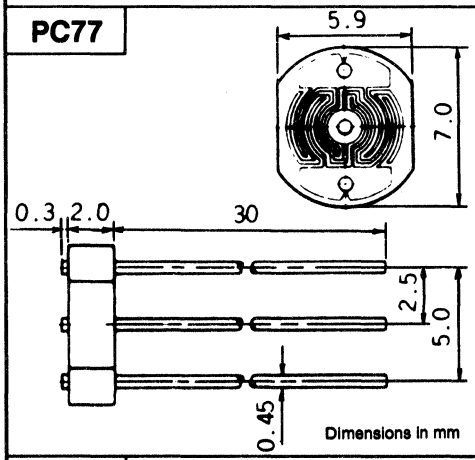

Dimensions in mm

PC78

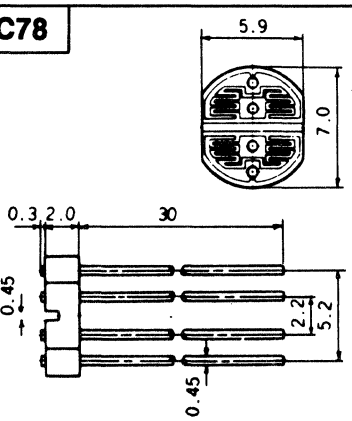

Dimensions in mm

PC79

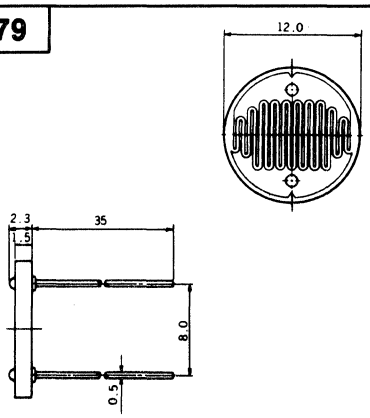

Dimensions in mm

PC80

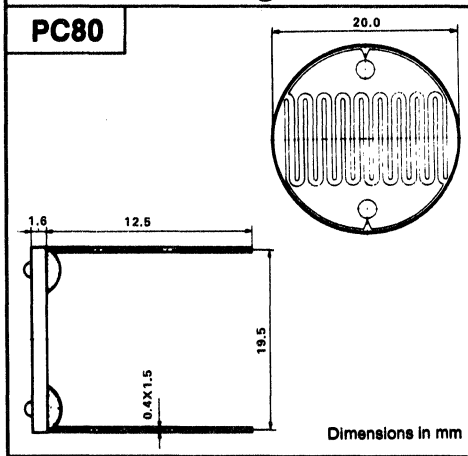

Dimensions in mm

PC81

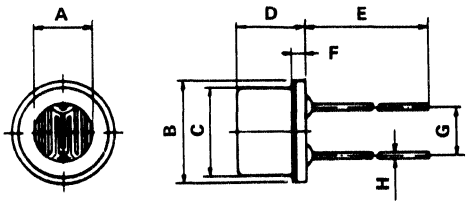

	A	B	C	D	E	F	G	H
PC81	3.0	5.3	4.6	3.6	25	0.75	2.5	0.3
PC81a	5.9	9.2	8.1	3.4	50	0.7	5.0	0.4
PC81b	3.6	6.5	5.5	3.5	50	0.65	3.4	0.3

Dimensions in mm

PC82

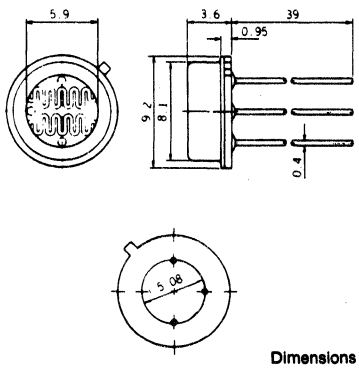

Dimensions in mm

PD5

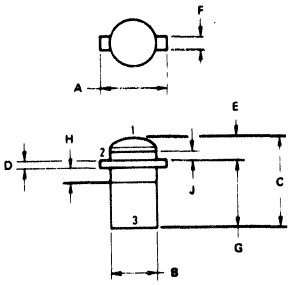

	A	B	C	D	E	F	G	H	J
PD5d	.088	.060		.005	.039		.070	.016	

49. OUTLINE DRAWINGS

PD8

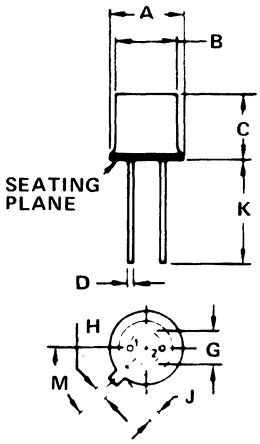

	A	B	C	D	G	H	J	K	M
PD8	.209 .230	.178 .195	.180 .210	.016 .019	.100 BSC	.039 .046	.033 .048	.500 MIN	45° BSC
PD8a	.210	.183	.145					1.500	
PD8b	.219	.185	.147		.100	.040		.500 MIN	
PD8d	.209 .230	.178 .195	.135 .165	.017 .021	.085 .115	.036 .046	.028 .048		
PD8f	.210	.189	.191	.019	.154			.500	
PD8g	.210 .216	.185	.192 .204	.017	.088 .111			.492 .570	
PD8h	.210	.185	.145	.020		.040	.040	1.500	
PD8i	.360	.325	.180	.017				1.500	
PD8k	.209 .230	.178 .195	.140 .150	.016 .019	.100	.036 .046	.028 .048	.500 MIN	45°
PD8m	.209 .230	.178 .195	.155 MAX	.016 .021	.100 NOM	.031 .044	.036 .045	.500 MIN	45°
PD8n	.209 .230	.178 .195	.170 .190	.016 .019	.100	.036 .046	.028 .048	1.000 MIN	45°
PD8p	.228 MAX	.188 MAX	.137 .157	.020 MAX	.100	.045 MAX	.046 MAX	.500 MIN	45°
PD8r	.209 .230	.180 .187	.155 MAX	.016 .021	.100 NOM	.031 .044	.036 .046	1.00 MIN	45°
PD8s	.209 .230	.178 .193	.150 .180	.016 .019	.100	.036 .046	.028 .048	1.00	45°
PD8t	.209 .230	.187 .195	.140 .150	.016 .019	.100	.031 .044	.036 .046	1.00 MIN	45°
PD8v	.209 .230	.178 .195	.190 .210	.016 .019	.100	.036 .046	.021 NOM	.500 MIN	45°
PD8w	.175 .187		.173 .189	.016 .020	.090 .109	.031 .047	.033 .045	.500 MIN	45°
PD8x	.205 .230	.178 .190	.130 .185	.016 .019				1.0 MIN	
PD8y	.350 .362	.325 .330	.126 .134	.018 DIA	.224 .236			.492 .571	45°
PD8z	.212 MAX	.177 .192	.102 .116	.016 DIA	.157 .165	.039 TYP	.039 TYP	.531 NOM	45°
PD8aa	.209 .224	.173 .189	.169 .193	.010 .016		.031 .047		.492 MIN	45°

PD12

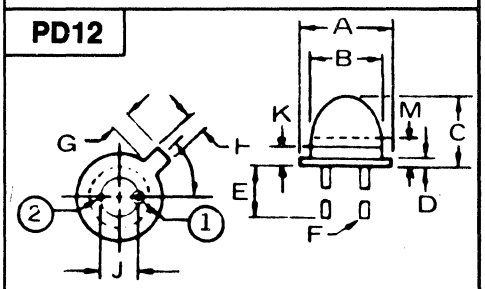

	A	B	C	D	E	F	G	H	J	K	M
PD12c	.209 .230	.166 .170	.176 .230	.010 .016	.500 MIN	.016 .019	.033 .048	.036 .046	.100		
PD12g	.217	.165	.126	.008	.500 MIN	.018			.100	.082	
PD12h	.228 MAX	.161 .169	.196 MAX	.007	.944 MIN	.017	.047	.039	.098	.098	
PD12i	.228 MAX		.275 MAX	.019	.944 MIN	.017	.039	.039	.099		
PD12m	.211	.161	.260		.512	.018	.039	.039	.098	.177	
PD12p	.210 .216	.161 .169	.157 MAX		.527 .535	.017			.088 .111		.106 .110
PD12s	.211	.161	.295	.016	.492 MIN	.018	.041	.039	.100	.161	
PD12t	.211	.165	.217 MAX	.008	.492 MIN	.018	.041	.039	.100	.070	
PD12u	.211	.161	.240	.016	.492 MIN	.018	.041	.039	.100	.122	
PD12w	.224	.165	.260		.511	.017	.039	.039	.098	.177	
PD12x	.212	.167	.129		.50			.10		.104	
PD12y	.211	.165	.149 MAX	.008	.492 MIN	.018	.041	.037	.100	.078	

PD13

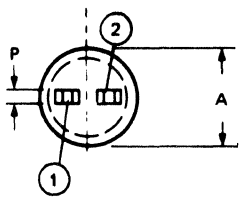

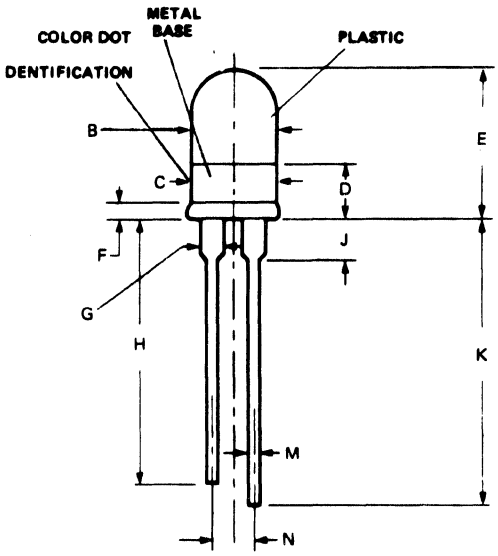

	A	B	C	D	E	F	G	H	J	K	M	N	P
PD13	.220 .240	.170 .200	.190 .210	.115 .125	.320 .360	.025 .035	.030 .055	.600 MIN	.080 .120	.650 MIN	.020 .030	.080 .120	.020 .030
PD13b	.130 MAX	.105 .125			.130 NOM			.560 MIN	.050 NOM	.610 MIN	.015 .025	.080 .100	.015 .025
PD13d	.220 .240	.170 .200	.170 .200	.190 .210	.320 .360	.025 .035	.035 .050	.230 MIN	.100	.280 MIN	.025 .040	.080 .120	.025 .040

PD14

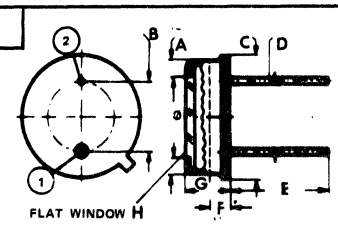

	A	B	C	D	E	F	G	H
PD14	.322	.200	.362	.019	.511	.064	.137	.236
PD14a	.326 MAX	.200	.354 .362	.017	.527 .535	.070	.118 .125	.224 .236
PD14b	.188	.100	.224	.020	.511	.104	.220	.157
PD14c	.188	.100	.224	.020	.511	.047	.149	.157
PD14d	.325	.200	.356 .370	.016 .019	.500 MIN		.185 .225	
PD14e	.325	.200	.360	.016 .019	1.500 1.532		.172 .183	.240
PD14f	.183	.100	.212	.017	.551		.181	.157
PD14g	.163 .167	.100	.208 .216	.016 .019	.500 .539		.110	
PD14h	.178 .195	.090 .110	.209 .230	.016 .019	.500 MIN	.120	.189 .209	.153
PD14j	.315 .325	.190 .210	.354 .364	.016 .019	.500 MIN	.065	.110 .130	.232
PD14k	.325 .333	.200		.020 NOM	.492 .571	.078 .094	.276 MAX	.224 .236
PD14l	.181 .189	.100	.209 .216	.010 .020	.496 .504	.105	.142 .150	.152 .156
PD14m	.313 .324	.200	.357 .368	.017 .020	.500		.173 .204	
PD14n	.313 .324	.200	.357 .368	.017 .020	.500		.248 .279	
PD14o		.200			.492 .570	.070	.126 .134	
PD14p	.185 MAX	.100	.209 .217	.016 .020	.50	.104	.209 .217	.152 .156
PD14q	.185 MAX	.100	.209 .217	.016 .020	.50	.104	.142 .150	.152 .156

49. OUTLINE DRAWINGS

PD15

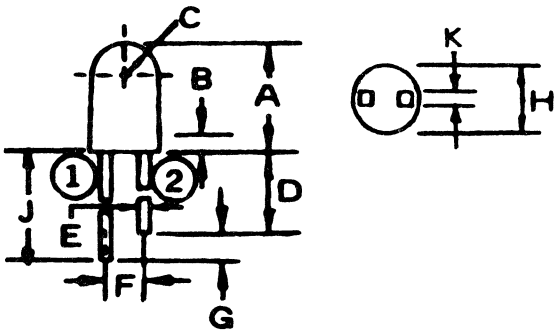

	A	B	C	D	E	F	G	H	J	K
PD15c	.190 .210			.500 MIN	.018 .022	.045 .055		.110 .130		.018 .022
PD15d	.230			.500 MIN	.020 sq	.100	.050	.185 DIA		.020 sq
PD15e	.276 .295			.984 MIN	.018 .022	.100	.039 MIN	.181 .197	1.04 MIN	

PD16

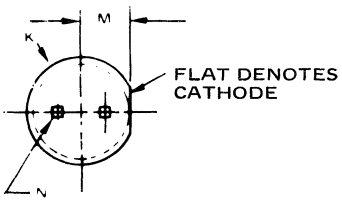

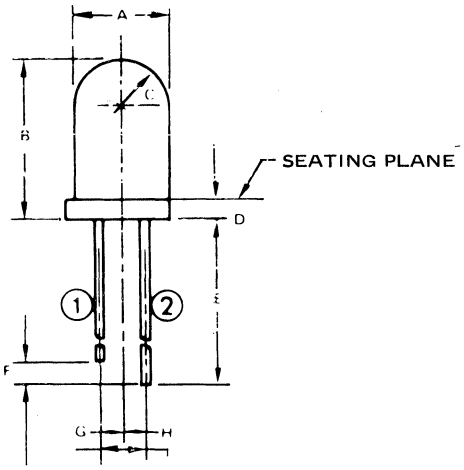

	A	B	C	D	E	F	G	H	J	K	M	N
PD16	.125 DIA	.210		.020	.500 MIN	.060	.025	.025	.060	.180 DIA		.020 SQ
PD16a	.200 DIA	.340	.100 RAD	.040	.500 MIN	.060 .075	.050	.060	.100	.230 DIA	.100	.020 SQ
PD16b	.115 .130	.190 .210		.020 MIN	.550 MIN	.025 .050	.025 .030	.025 .030	.060 .060	.150 .160		.011 .017
PD16c	.115 .130	.190 .210		.020 MIN	1.050 MIN	.025 .050	.025 .030	.025 .030	.050 .060	.150 .160		.011 .017
PD16d	.115 .130	.125 .145		.030	.525 MIN	.025 MIN	.025 .030	.025 .030	.050 .060	.150 .160		.011 .017
PD16e	.115 .130	.125 .145		.030	1.025 MIN	.025 MIN	.025 .030	.025 .030	.050 .060	.150 .160		.011 .017
PD16f	.110 .200	.313 .373		.025 .035	.640 MIN	.040 MIN			.100 NOM	.220 .240		.014 .016
PD16h	.125	.210		.030	.600 MIN	.050	.025	.025	.050	.160 DIA		
PD16j	.195 .205	.235 .285		.047 .065	.940 1.06	.065 .075			.095 .105	.225 .235		.018 .022
PD16k	.120	.200		.020	1.05 MIN	.050			.055	.155		.014
PD16n	.190 .210	.225 .355		.030	.715	.040	.400 .600		.090 .110	.220 .240		
PD16p	.190 .210	.325 .355		.030	.650 .690	.040	.400 .600		.090 .110	.220 .240		
PD16r	.115 .125	.190 .210		.020	.600 MIN	.050	.025 .030	.025 .030	.050 .060	.150 .160		.011 .014
PD16s	.115 .125	.190 .210		.020	1.00 MIN	.050	.025 .030	.025 .030	.050 .060	.150 .160		.011 .014
PD16t	.115 .125	.190 .210		.045	.600 MIN	.050	.025 .030	.025 .030	.050 .060	.150 .160		.011 .014
PD16u	.115 .125	.190 .210		.045	1.00 MIN	.050	.025 .030	.025 .030	.050 .060	.150 .160		.011 .014
PD16v	.190 .210	.315 .350		.015 .050	.670 7.35	.040 MIN				.230 DIA	.102	.015x .017
PD16w	.115 .135	.190 .210		.020 .040	1.00 MIN	.025 MIN			.090	.140 .160 DIA		.020
PD16x	.190 .210	.330 .350		.020 .040	1.00 MIN	.025 MIN			.100	.220 .240 DIA		.020
PD16y	.190 .210	.330 .350		.020 .040	1.00 MIN				.095 .105	.220 .240	.025	
PD16z	.200	.339	.177	.040	1.10	.059			.100	.228		.019
PD16aa	.180 .200	.275 .295		.035 .055	1.00 MIN				.100 NOM	.220 .240		.016 .024
PD16ab	.190 .210	.230 .250		.052 .072	1.00 MIN				.100 NOM	.220 .240		.016 .024
PD16ac	.180 .200	.330 .350		.020 .040	1.00 MIN				.100 NOM	.220 .240		.016 .024
PD16ad	.190 .210	.330 .350		.030 .050	1.00 MIN				.100 NOM	.220 .240		.016 .024
PD16ae	.110 .130	.190 .210		.020 .040	.600 MIN	.050			.045 .055	.135 .165		.020 SQ
PD16af	.197 .205	.303		.039 .047	.700 MIN	.080			.100	.230 .232		.025 SQ
PD16ag	.195 .205	.235 .255		.050 .070	.095 .115	.050 TYP			.100 TYP	.220 .240		.016
PD16ah	.190 .200	.330 .350			.800 MIN	.050 MIN			.095 .105			
PD16ai	.190 .210				.620 MIN	.050 MIN			.045 .055			
PD16aj	.115 .120	.200 .220		.017 .037	.600 MIN				.050	.170 DIA		.023 SQ
PD16ak	.189 .201	.323 .354		.059 MAX	1.00 MIN	.059 TYP	.050 TYP	.050 TYP	.100 TYP	.201 DIA		.016 .024
PD16al	.106 .114	.173 .188		.051 MAX	1.10 1.18	.059 TYP	.050	.050	.100	.130 DIA		.016 .024
PD16am	.193 .200	.295 .303		.059 MAX	1.13 MAX	.059 TYP	.050	.050	.100	.232 DIA		.016 .024
PD16an	.114 .122	.181 .200		.020 TYP	1.20 MAX	.059 TYP	.025 TYP	.025 TYP	.050 TYP	.157 DIA		.015 .020
PD16ao	.200	.340		.040	.750 MIN	.050			.100			
PD16ap	.200	.340		.040	.850 MIN	.050			.100			
PD16aq	.115 .125	.140 .160		.045	1.00	.025 .075			.050 .060	.150 .160		
PD16ar	.190 .200	.290 .310		.040	.750 MIN	.050			.100 TYP	.235 .245		.015 .025

PD18

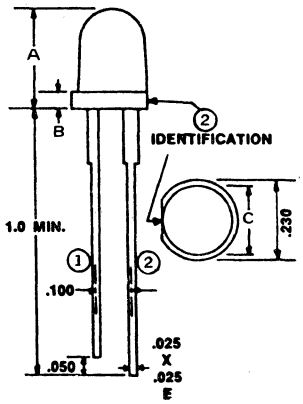

	A	B	C
PD18	.285	.045	.190
PD18a	.340	.040	.200
PD18b	.240	.062	.200
PD18c	.330 .350	.030 .050	.180 .210
PD18d	.330 .350	.145 .180	.175 .195
PD18e	.290 .310	.040 NOM	.180 .200
PD18f	.204 NOM	.039 NOM	.129 NOM

PD19

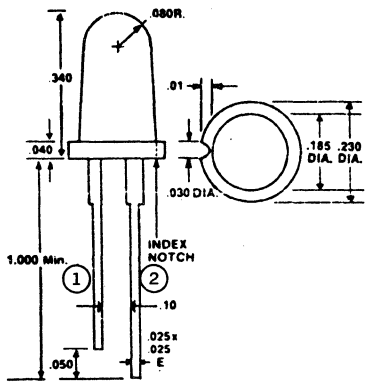

49. OUTLINE DRAWINGS

PD21

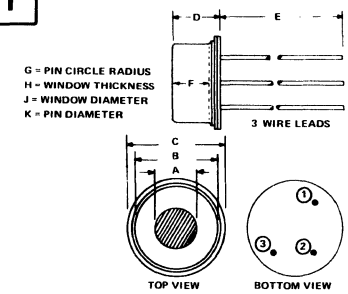

	A	B	C	D	E	F	G	H	J	K
PD21	.440	.820	1.25	.280	.500	.210	.370	.060	.830	.040
PD21b		.470	.550	.210	.410				.410	.017

PD22

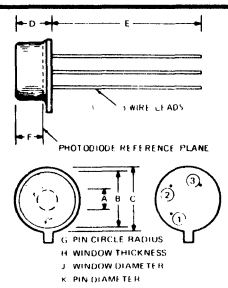

	A	B	C	D	E	F	G	H	J	K	
PD22	.100	.330	.360	.170	1.500	.090	.100	.050	.240	.018	
PD22b	.039	.330	.358	.165	1.500	.090	.098	.051	.240	.018	
PD22c	.039	.181	.244	.200	1.500	.145	.051	.035	.137	.018	
PD22d	.098	.330	.358	.165	1.500	.090	.098	.051	.240	.018	
PD22e	.137	.484	.551	.200	1.500	.145	.098	.051	.421	.018	
PD22f		.325	.360	.250	1.500				.250	.017	
PD22g		.230	.318 .330	.240 .259		.106 .145			.037		
PD22h	.090	.183 .185	.207 .213	.121 .131	.500 MIN		.047 .053			.016 .019	TO 4.6 Equiv.

PD23

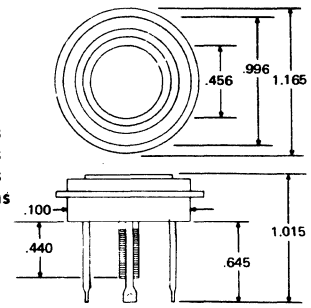

PD23 – 3 PINS
PD23a – 4 PINS
PD23b – 6 PINS
P D23c- 4 Pins

PIN CIRCLE RADIUS – .344 IN.
WINDOW THICKNESS – .039 IN.
WINDOW DIAMETER – .456 IN.

PD25

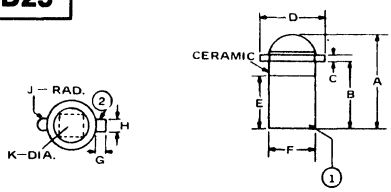

	A	B	C	D	E	F	G	H	J	K
PD25	.122 .135	.082 .088	.005 .010	.084 .092	.063 .067	.058 .062	.009 .019	.016 .024	.009 .011	
PD25a	.109	.085	.007	.088		.060			.020	.030
PD25b	.128	.085	.005	.088		.060			.020	.043
PD25c	.116 .141	.079 .088	.005 .009	.083 .092	.061 .068	.062 MAX		.015 .023		
PD25f	.118 .135	.080 .089	.005 .010	.084 .092	.062 .069	.058 .062		.016 .024		.038 .042
PD25h	.102 .118	.078 .094	.007 TYP	.082 .090		.051 .066	.019 TYP	.019 TYP		.031 TYP

PD26

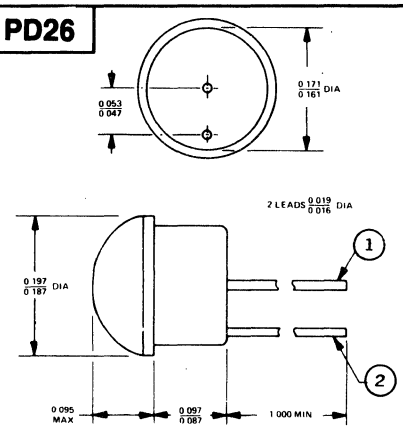

PD27

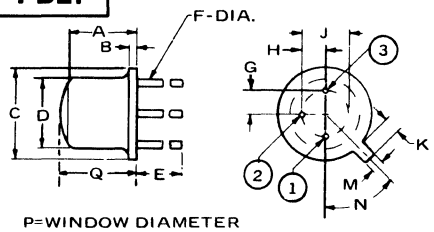

	A	B	C	D	E	F	G	H	J	K	M	N	P	Q
PD27	.190 .210	.030 MAX	.209 .230	.178 .195	.500 MIN	.016 .019	.050	.050	.100	.028 .048	.036	45°	.140	
PD27b			.209 .230	.178 .194	.500 MIN	.017 .020			.090 .109	.028 .048	.035 .046		.149	.188 .208
PD27f	.190 .210	.300	.209 .230	.180 .190	.500 MIN	.016 .019	.050	.050	.100	.028 .048	.036 .046	45°		
PD27g	.170 .210	.030 MAX	.209 .230	.178 .196	.500 MIN	.016 .019			.100	.028 .048	.036 .046	45°	.140 MIN	

PD28

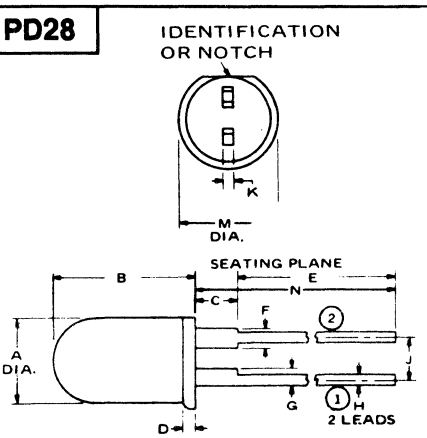

	A	B	C	D	E	F	G	H	J	K	M	N
PD28	.190 .210	.330 .360	.120 .140	.020 .040	.850 MIN	.035 .045	.027 .037	.022 .028	.095 .105	.023 .027	.220 .240	.970 MIN
PD28b	.200	.300	.130	.040	.700 MAX			.025	.100	.025		
PD28d	.192 .200	.330 .338	.098	.039	.492 .511	.039	.027	.019	.100	.019	.220 .228	
PD28e	1.90	.340	.100	.040	.450			.025	.100	.025	.230	.550 MIN
PD28f	.190	.340	.130	.040	.420			.025	.100	.025	.230	.550 MIN
PD28h	.192 .200	.330 .338	.145	.039	.492 .511	.039	.027	.019	.100	.019	.220 .228	.637 .657
PD28k	.192 .200	.248 .255	.157	.039	.492 .511	.039	.027	.019	.100	.019	.220 .228	.649 .688
PD28p	.193 .209	.331 .346	.075 .090	.039	.492 .512	.039	.027	.020	.100	.020	.230 .236	.567 .602
PD28r	.190 .210	.330 .350	.120 .140	.020 .040	.550 MIN	.035 .045	.027 .037	.025	.095 .105	.025	.220 .240	1.00 MIN
PD28s	.190 .210	.330 .350	.160 .180	.020 .040	.500 MIN	.035 .045	.027 .037	.025	.100	.025	.220 .240	
PD21t	.190 .210	.330 .350	.160 .180	.020 .040	.500 MIN	.035 .045	.027 .037	.022 .028	.095 .105	.026 .039	.220 .240	
PD28u	.193 .200	.295 .303			.535 .551	.039 .051	.028 .039	.020 .026		.020 .026	.224 .232	

PD29

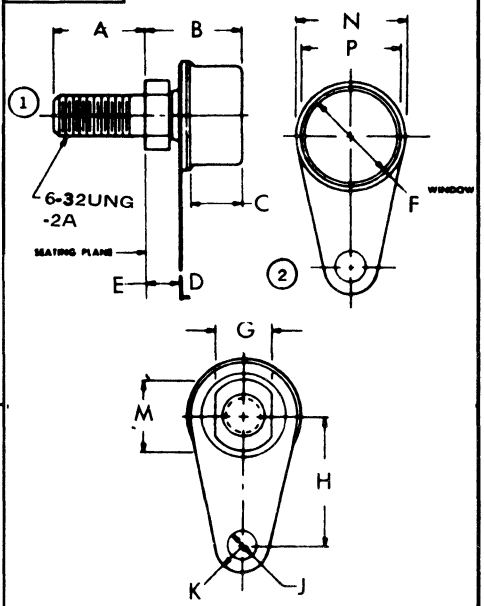

	A	B	C	D	E	F
PD29	.300	.335	.185	.010	.110	.305
PD29A	.312	.386	.252	.0004	.012	.248

G	H	J	K	M	N	P
.1875	.425	.005 Dia.	.010 Rad.	.220	.360	.325
.1875	.425	.098 Dia.	.099 Rad.	.232	.362	.331

49. OUTLINE DRAWINGS

PD30

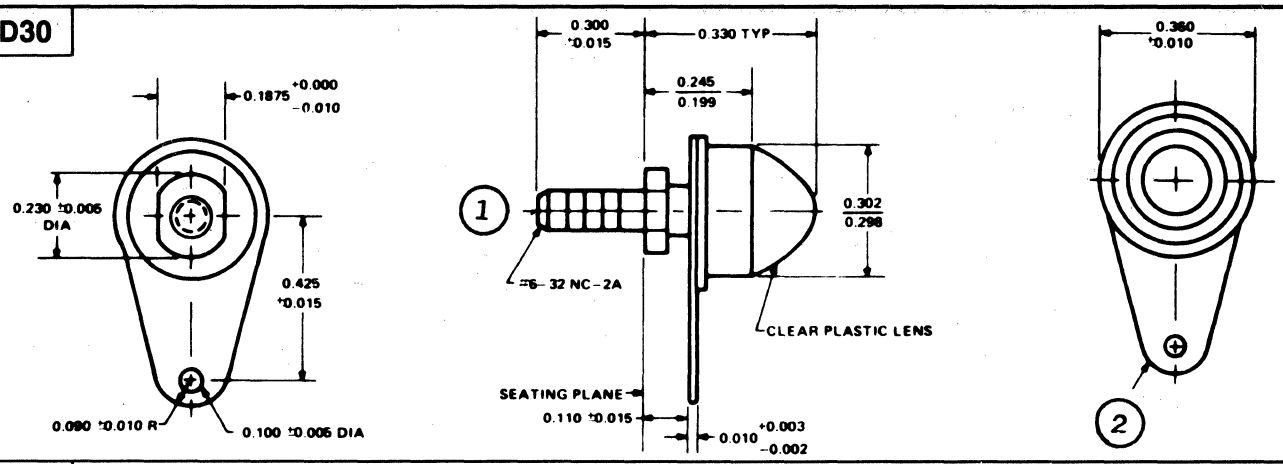

PD31

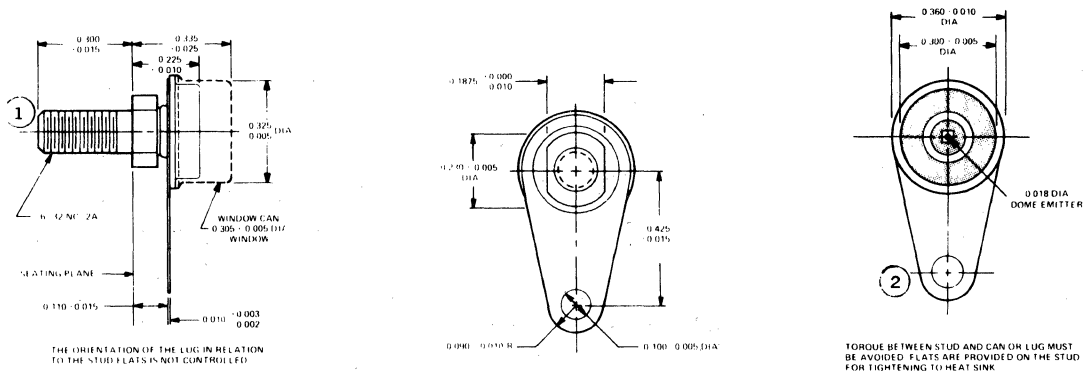

THE ORIENTATION OF THE LUG IN RELATION TO THE STUD FLATS IS NOT CONTROLLED

TORQUE BETWEEN STUD AND CAN OR LUG MUST BE AVOIDED. FLATS ARE PROVIDED ON THE STUD FOR TIGHTENING TO HEAT SINK

PD32

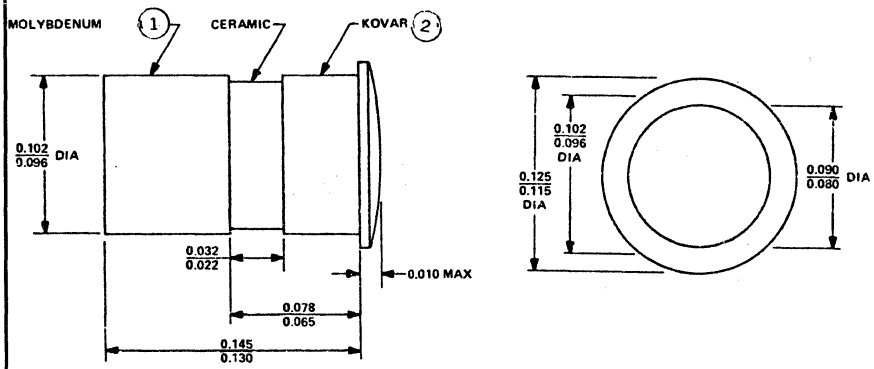

PD36

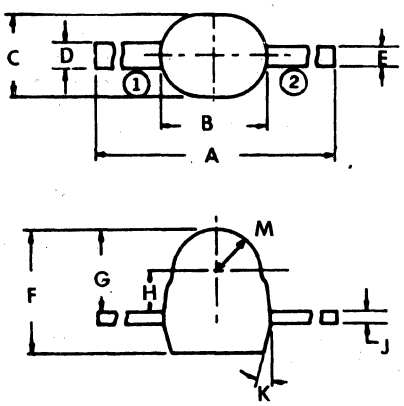

	A	B	C	D	E	F	G	H	J	K	M
PD36	.858	.110 MAX	.085 MAX	.025	.020	.129 MAX	.085 MAX	.043	.009	15°	
PD36a		.090 .110	.080 .090	.025	.020	.110 .130	.075 .085	.042	.010	15°	.038
PD36b	.850 TYP	.120	.100	.025	.020	.100			.010		
PD36c	.590 MIN	.090 .110	.080 .090	.025	.020	.080 .110	.050 .060		.010 .011	15°	.038

PD33

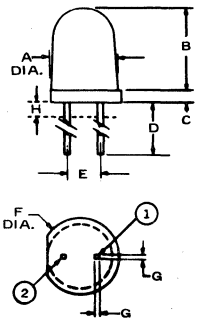

	A	B	C	D	E	F	G	H
PD33	.110 / .130	.170	.020 / .040	.500 MIN	.045 / .055	.140 / .160	.018 / .024	
PD33a	.190	.240	.030 / .060	.500 MIN	.100	.230	.013 / .023	.050
PD33b	.115 / .125	.180 / .200	.030	.500	.050	.155	.020 SQ	
PD33d	.190	.300	.040	1.000 MIN	.100	.230	.025	
PD33g	.110 / .125	.180 / .200	.030	.500 MIN	.050 / .060	.150 / .160	.018 / .022	
PD33l	.190 / .210	.290 / .310	.040 NOM	1.00 MIN	.100 TYP	.230 / .250	.015 / .025	

49. OUTLINE DRAWINGS

PD38

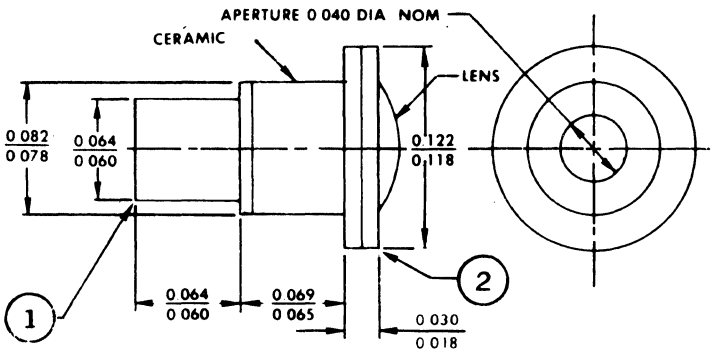

PD39

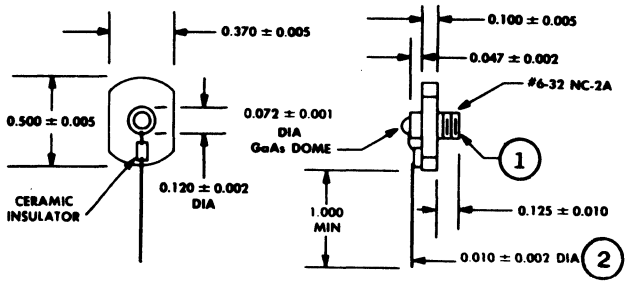

PD41

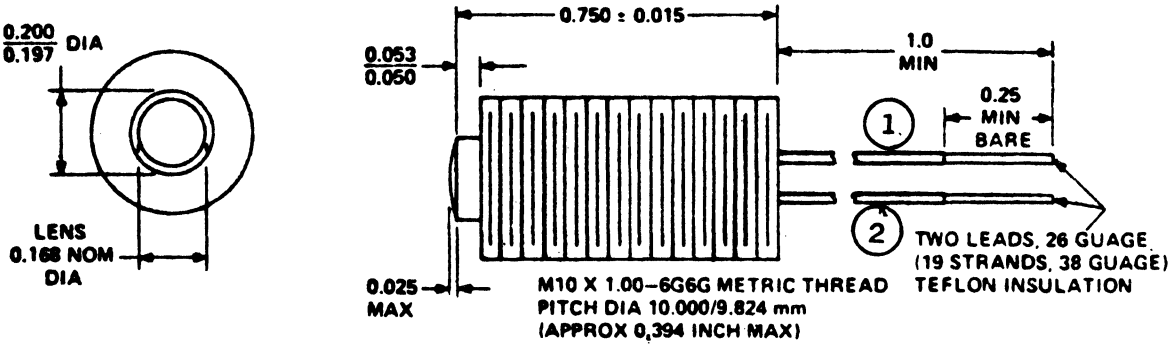

PD586

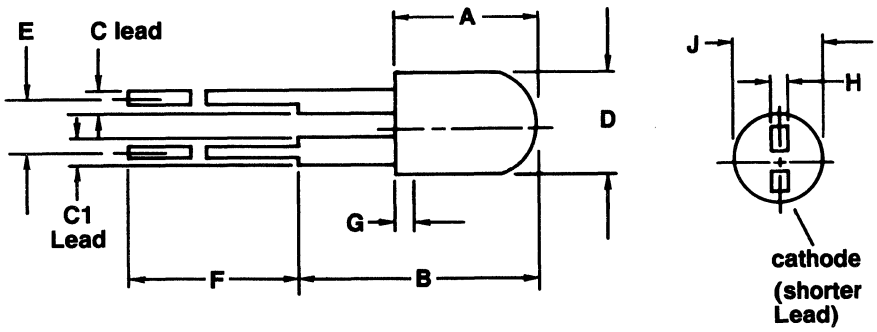

	A	B	C	C1	D	E	F	G	H	J
PD586	.256 TYP	.425	.028 MAX	.039 MAX	.200 TYP	.100 TYP	.154 MIN		.020 SQ	.228 TYP
PD586a	.276 / .295	.421 / .445	.020 SQ	.020 SQ	.181 / .197	.100 TYP	.146 / .169	.039 TYP	.020 SQ	

PD43

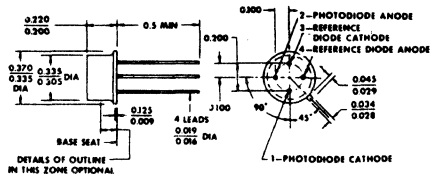

PD44

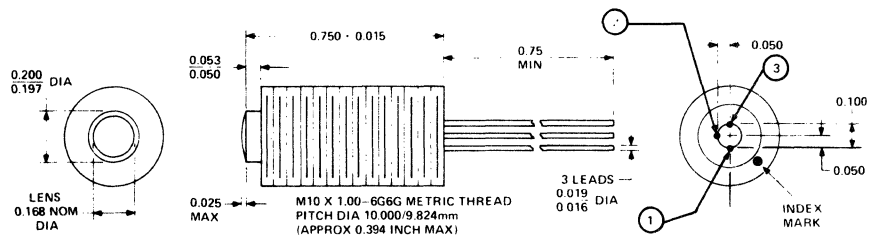

Dimensions without tolerance designate true position. Leads having maximum diameter (0.019") measured in gaging plane 0.054" +0.001" −0.000" below the seating plane of the device shall be within 0.007" of their true positions.

49. OUTLINE DRAWINGS

PD47

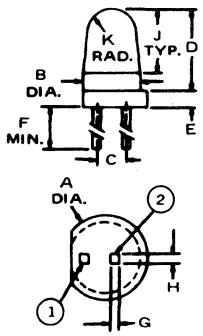

	A	B	C	D	E	F	G	H	J	K
PD47	.220	.185	.100	.200	.045 .075	.500 MIN	.013 .023	.013 .023	.225 TYP	.080
PD47a	.230	.194	.100	.240	.029 .059	.590	.031	.011		
PD47b	.220	.197	.098	.197	.039	.630 .709	.016	.016	.197	
PD47c	.220	.197	.098	.299	.039	.630 .709	.016	.016	.299	

PD49

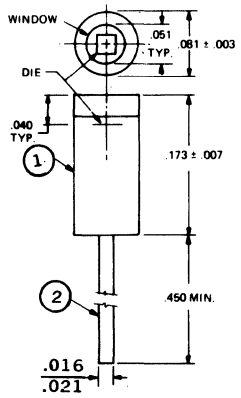

PD50

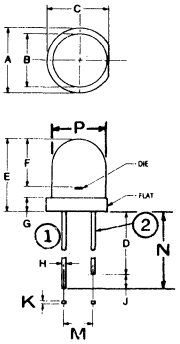

	A	B	C	D	E	F	G	H	J	K	M	N	P
PD50	.220 .240	.180 .200	.215	.500 .740 TYP	.210 .250	.165	.038 .062	.014 .020	.050	.013 .017	.100		
PD50a	.220 .240	.180 .200	.215	.500 .630 TYP	.320 .360	.165	.038 .062	.014 .020	.050	.013 .017	.100		
PD50b	.220 .240	.180 .200	.215	.500 .690	.265 .305	.165	.038 .062	.014 .020	.050	.013 .017	.100		
PD50c	.230			.500 MIN	.285		.050	.017		.015	.100		
PD50d	.220 .240	.170 .200		.600 MIN	.313 .373		.025 .035	.014 .020	.040 MIN	.014 .016	.100		
PD50e	.240 .250	.185 .195					.035 .055	.022 .028		.018 .022	.100	.450 .500	.160
PD50f	.230	.200		.500 MIN	.340			.022 .028		.018 .022	.100		
PD50g	.230	.180 .203		.215	.300			.020		.020	.100	1.125	
PD50h	.228				.291		.039	.019		.019	.100	.677	.200
PD50j	.228				.338		.039	.019		.019	.100	.657	.200
PD50k	.220 .240	.170 .200		1.000 MIN	.210 .250		.055 .065	.014 .020	.050 MIN	.014 .016	.100 NOM	1.050 MIN	

PD50m	.230	.200		1.000 MIN	.340		.030	.020	.050	.020	.100 NOM	1.050 MIN	
PD50n	.220 .240	.205 MAX		1.000 MIN	.225 .250		.055 .075	.020 .023		.020 .023	.095 .105		
PD50p	.220 .240	.205 MAX		1.000 MIN	.355 .380		.055 .075	.020 .023		.020 .023	.095 .105		
PD50q	.140 .160	.110 .130		.500 MIN	.190 .210		.020 .040	.018 .022		.018 .022	.045 .055		
PD50r	.225 .235			1.000 MIN	.340 .360		.020 .040	.014 .018	.030 .050	.013 .017	.090 .110		.195 .205
PD50s	.230	.190		.500 MIN	.285		.050	.017	.050	.015	.100	.550 MIN	
PD50t	.220 .240	.190 .210		.750 MIN	.330 .360		.020 .040	.018 .022	.050 MIN	.018 .022	.095 .105	.800 MIN	.190 .210
PD50u	.220 .240	.170 .200		1.000 MIN	.313 .373		.025 .035	.014 .025		.014 .016	.100 NOM	1.050 MIN	.170 .200
PD50v	.230	.180 .200	.215	.680 .705	.260 .295		.042 TYP	.015	.040 MIN	.017		.720 .745	.180 .200
PD50w	.230	.180 .200	.215	.720 .745	.205 .240		.042 TYP	.015	.040 MIN	.017		.760 .785	.180 .200
PD50x	.230	.180 .200	.215	.625 .650	.315 .350		.042 TYP	.015	.040 MIN	.017		.665 .690	.180 .200
PD50z	.230		.215	1.060 .600	.285		.050 .045	.019 .014	.050 .025 MIN	.019	.100 .050 .060		.190 .115 .130

PD52

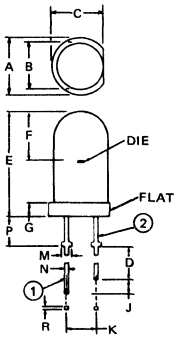

	A	B	C	D	E	F	G	J	K	M	N	P	R
PD52	.200 .240	.180 .200	.215	.500 .528 TYP	.320 .360	.165	.038 .062	.050	.100	.040 .060	.022 .028	.085 .115	.023 .027
PD52a	.230	.190		.400	.340		.050	.050	.100	.050	.025	.100	.025
PD52b	.230	.180 .220	.215	.520 TYP	.315 .350		.042 TYP	.040 MIN			.025	.112 TYP	.025
PD52c	.230	.190		.500 MIN	.340		.050	.050	.100	.050	.025	.100	.025

PD54

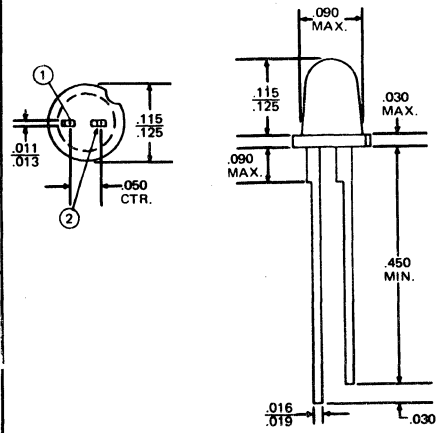

PD55

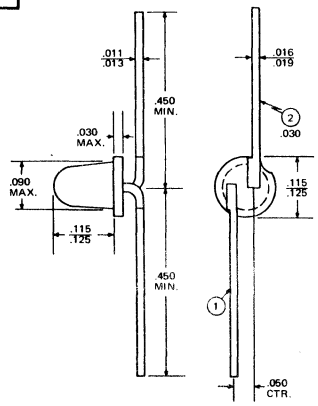

49. OUTLINE DRAWINGS

PD56

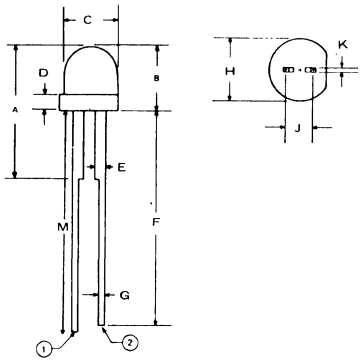

	A	B	C	D	E	F	G	H	J	K	M
PD56a	.510	.355 .380	.205 MAX	.055 .070	.040	1.00 MIN	.020 .023	.225 .235	.095 .105	.020 .023	
PD56b	.532 MAX	.394 MAX	.189	.031	.031	.476 MIN	.026	.220	.100		.551 MIN
PD56c	.413 .512	.335 .374	.185 .200	.024 .035	.039	.579 MIN	.017 .023	.228	.100		.630 MIN

PD58

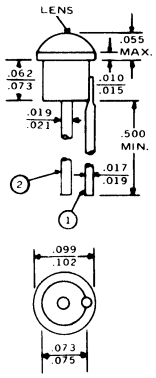

PD59

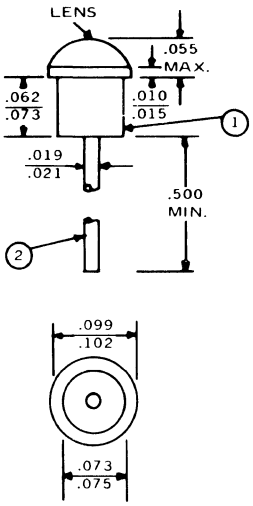

PD61

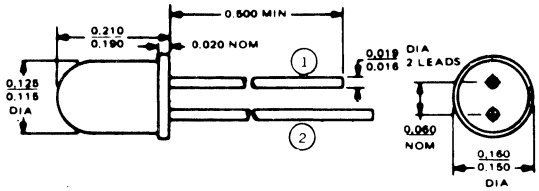

PD62

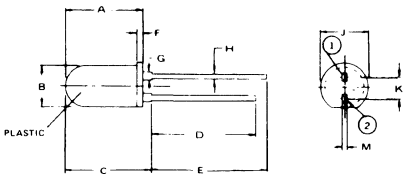

	A	B	C	D	E	F	G	H	J	K	M
PD62	.343	.185	.430	.500 MIN	.550 MIN	.030	.040	.025	.230	.100	.025
PD62c	.313 .373	.185		1.00 MIN	1.05 MIN	.030	.014 .025	.014 .025	.230	1.00	.014 .016

PD63

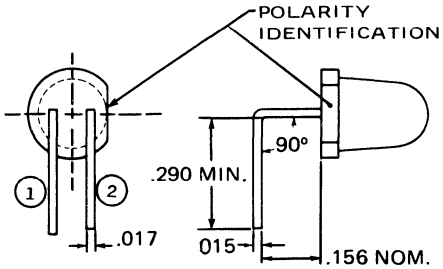

PD66

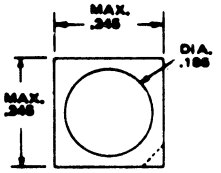

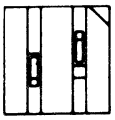

	A	B
PD66	.380 MAX	.020
PD66a	.437 MAX	.025
PD66b	.450 MAX	.020

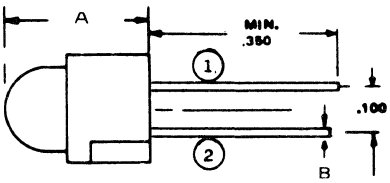

49. OUTLINE DRAWINGS

PD67

	A	B
PD67	.380 MAX	.020
PD67a	.437 MAX	.025
PD67b	.450 MAX	.020

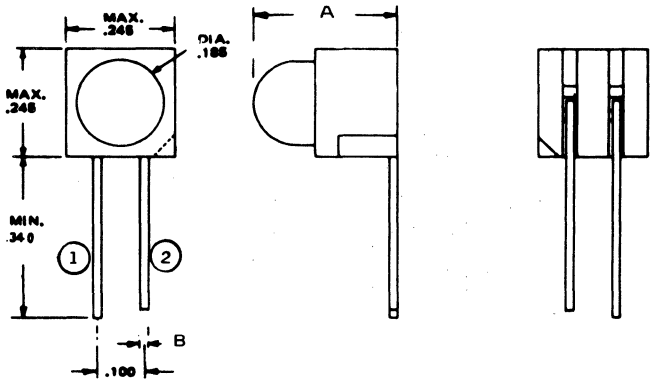

PD68

Suffix	A	B	C	D	E
PD68	.125	.200	.020	.340 MIN	.185 Dia
PD68a	.187	.210	.025	.340 MIN	.185 Dia
PD68b	.202	.200	.020	.340 MIN	.185 Dia
PD68c	.170	.200	.018 NOM	.145 .185	.185 Dia
PD68d	.170	.200	.025 NOM	.145 .185	.185 Dia

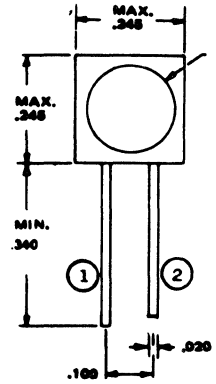

PD69

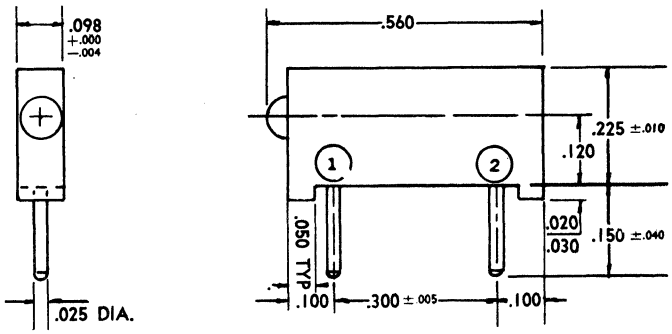

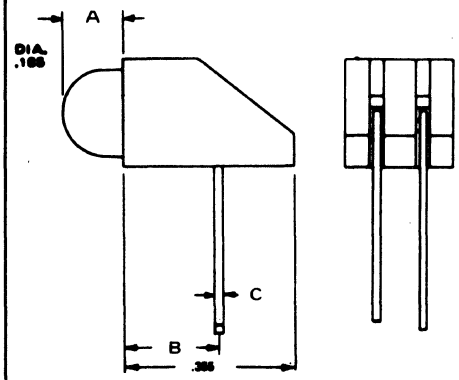

PD77

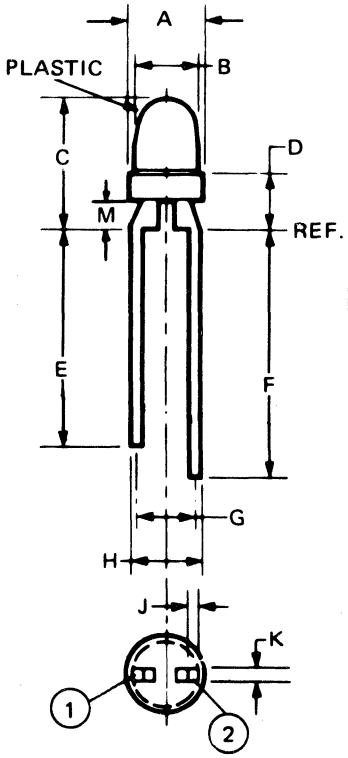

	A	B	C	D	E	F	G	H	J	K	M
PD77	.115 .135	.105 .125	.200 .240	.070 .110	.560 MIN	.610 MIN	.080 .100	.120 MAX	.015 .025	.015 .025	
PD77a	.130 MAX	.105 .125	.190 .250		.550 MIN	.600 MIN	.090	.120 MAX	.015 .025	.015 .025	.060
PD77b	.105 .125	.115 .135	.200 .240	.070 .110	.685 .700	.735 .750	.080 .100		.015 .025	.015 .025	
PD77d	.122 .125	.110 .114	.252 .267		.559 .590	.645 .649	.090		.019	.019	.063 MIN
PD77e	.135 MAX		.220 TYP		.550 MIN	.600 MIN		.120 MAX	.020 NOM	.020 NOM	.040 TYP
PD77f	.122	.106 .114	.25 .268	–	.575 .591	.634 .650	.091	–	–	.020 .026	–
PD77h	.150	.118	.224	.106	.650	.709	.090	–	–	–	.067
PD77l	.115 .135	.105 .125	.200 .240	–	1.00 MIN	1.05 MIN	.090 .110	–	.015 .025	.018 .022	–
PD77m	.115 .135	.105 .125	.200 .240	.075 .095	1.00 MIN	1.05 MIN	.090 .110		.015 .021	.015 .021	.035 .055
PD77n	.177 .197	.147 .167	.240 .300	.060 .100	.440 MIN		.085 .095		.018 .022	.018 .022	.040 .060
PD77o	.134 .118	.112 .124	.244 .260		.630	.709	.100				
PD77p	.112 .124	.118 .134	.252 .268		.630 MIN	.709 MIN	.100				
PD77q	.115 .135	.105 .125	.210 .230	.040 TYP	.775 MIN	.875 MIN	.090 .110				.050 TYP
PD77r	.115 .135	.105 .125	.220 .250		.95 MIN	.99 MIN	.100				

PD78

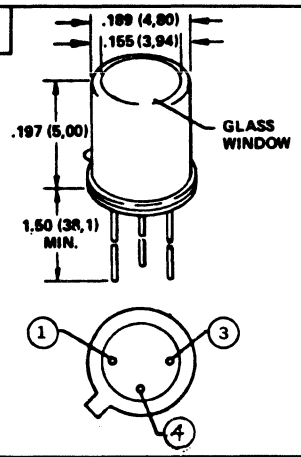

49. OUTLINE DRAWINGS

PD81

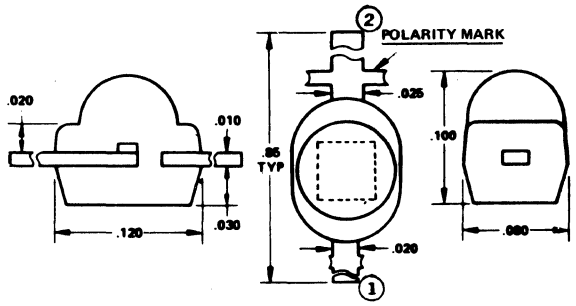

PD84

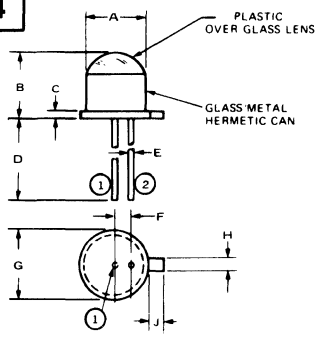

	A	B	C	D	E	F	G	H	J
PD84	.176	.180	.016	.970	.016	.045	.200	.035	.032
	.190	.225	.024	1.030	.020	.055	.220	.045	.042
PD84a	.176	.140	.016	.970	.016	.045	.200	.035	.032
	.190	.157	.024	1.030	.019	.055	.220	.045	.042

PD85

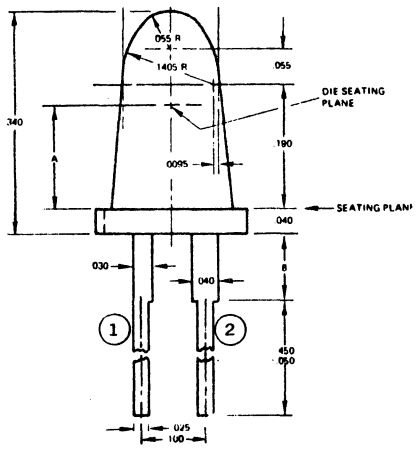

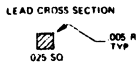

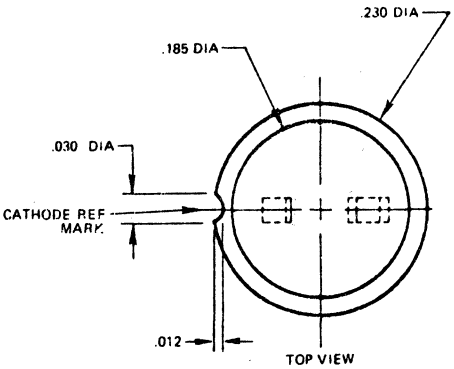

DIM	A	B
PD85	.190	.100
PD85a	.175	.115
PD85b	.160	.130
PD85c	.145	.145

PD86

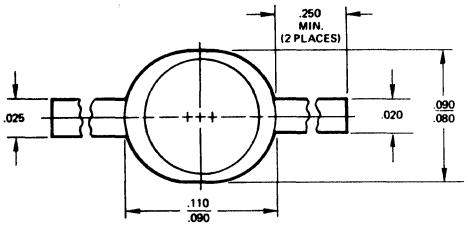

NOTE: 1. CENTERLINE OF STUD TO CENTERLINE OF LENS TIR ± .010
2. TOLERANCE = ± .010 UNLESS OTHERWISE SPECIFIED

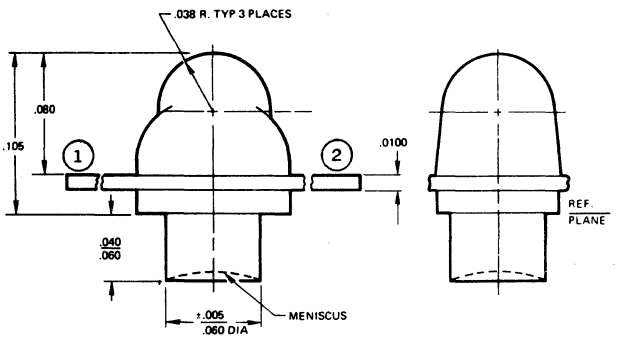

49. OUTLINE DRAWINGS

PD127

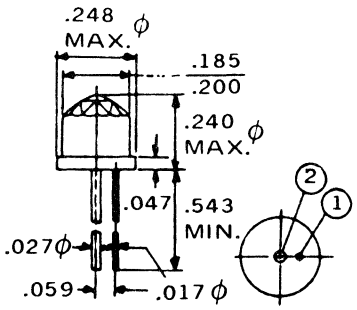

PD89

	A	B	C	D	E	F	G
PD89	.340	.190	.100	.040	.025	.025	.400 .500
PD89a	.340	.160	.130	.040	.025	.025	.400 .500
PD89e	.340	.145	.145	.040	.025	.030	.400 .500
PD89f	.340		.100	.040	.025	.025	.650 .750
PD89g	.340		.130	.040	.025	.025	.650 .750
PD89h	.340		.190	.040	.025	.025	.650 .750

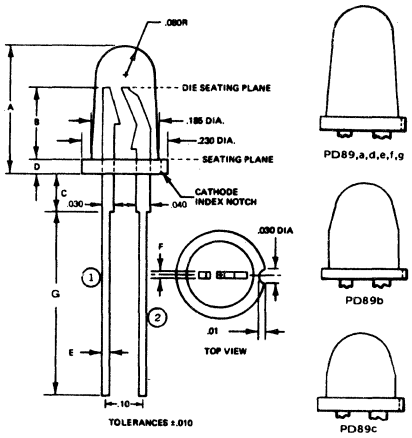

PD90

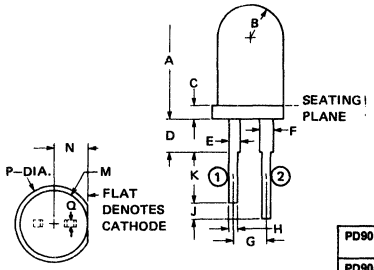

	A	B	C	D	E	F	G	H	J	K	M	N	P	Q
PD90	.330 .350	.090 .110	.030 .050	.090 .110	.020 .040	.030 .050	.090 .110	.010 .030	.040 .060	.740 .760	.190 .210	.090 .110	.220 .240	.010 .030
PD90a	.275		.035				.100	.025	.050	.500 MIN	.192			.025
PD90b	.210 .260		.055 .065	.160 .180	.027 .037	.035 .045	.100 NOM	.022 .028		.500	.170 .200		.220 .240	.023 .027
PD90c	.335 .374	.185 .200	.024 .035			.039	.100	.017 .023		.500			.228	

PD93

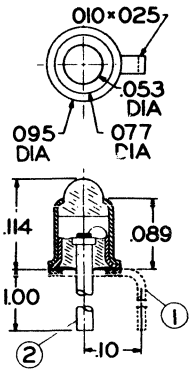

PD93a — WITHOUT TAB

PD92

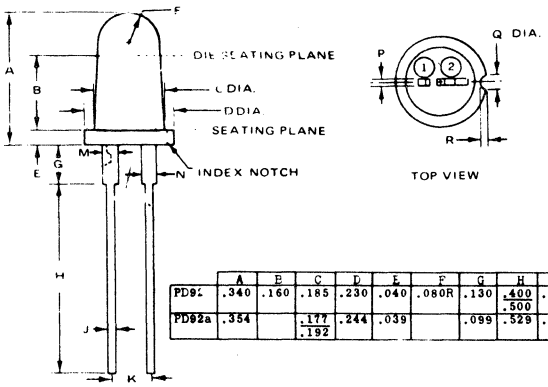

	A	B	C	D	E	F	G	H	J	K	M	N	P	Q	R	REMARKS
PD92	.340	.160	.185	.230	.040	.080R	.130	.400 .500	.025	.100	.040	.040	.025	.030	.010	INDEX NOTCH
PD92a	.354		.177 .192	.244	.039		.099	.529	.025	.099						DESIG NOTCH ON LEAD

PD95

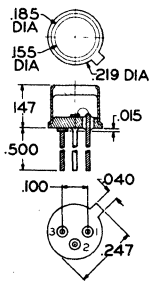

PD96

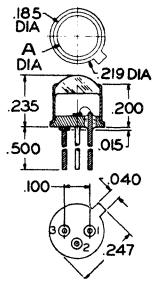

	A
PD96	.140
PD96a	.148
PD96b	.155

PD126

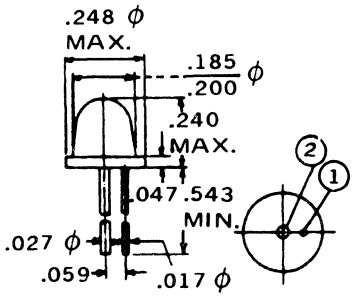

49. OUTLINE DRAWINGS

PD100

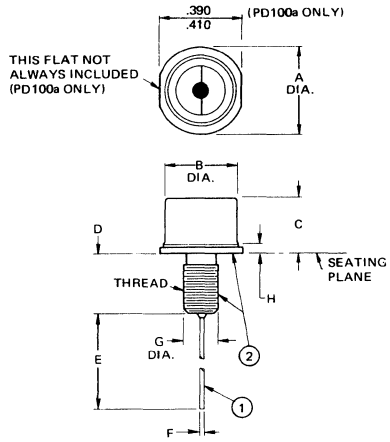

	A	B	C	D	E	F	G	H	THREAD	REMARKS
PD100	.235 .265	.170 .190	.160 .195	.340 MAX	.750 MIN	.016 .021			8-32	
PD100a	.425 .450	.325 .335	.255 .280	.286 .315	.750 1.10	.018 .022	.165 .169	.035 .050	10-32	
PD100b	.425 .450	.330 .365	.580 .640	.286 .315	.750 1.10	.018 .022	.165 .169	.030 .040	10-32	Fiber Optic Output Cable 127mm min length
PD100c	.235 .265	.170 .190	.160 .195	.340 MAX	.750 MIN	.016 .021			8-32	Laser Chip is Geometrically Centered in the Pkg
PD100d	.425 .450	.325 .335	.255 .280	.286 .315	.750 1.10	.018 .022	.165 .169	.035 .050	10-32	Laser Chip is Geometrically Centered in the Pkg

PD105

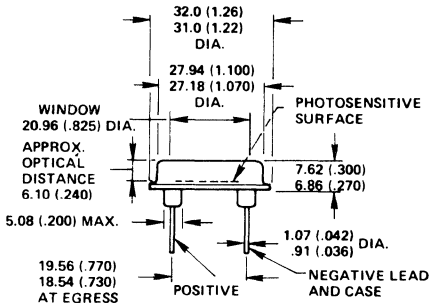

PD106

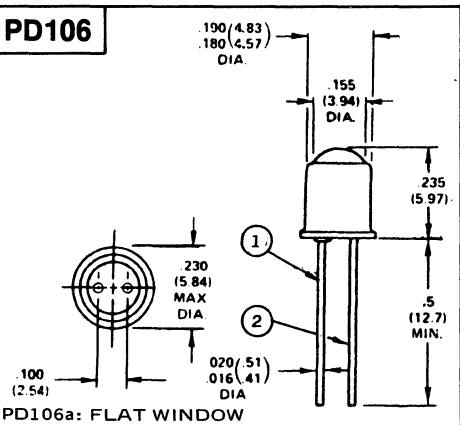

PD106a: FLAT WINDOW

PD108

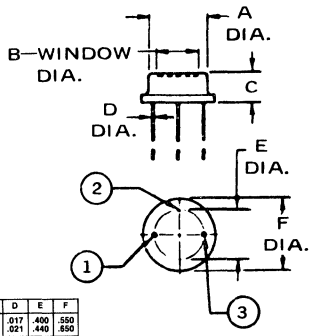

	A	B	C	D	E	F
PD108	.444 .524	.375	.200 .250	.017 .021	.400 .440	.550 .650
PD108a	1.100	.810	.270	.040	.750	1.250
PD108b	.497	.360	.220	.018	.420	.575
PD108c	.444 .524		.270 .330	.027 .033	.272 .292	.500 .650
PD108d	.484 .492	.421 .429	.196 .212	.017 TYP		.535 .551

PD109

(SUFFIX)	DIODE OPTION
-R	Electricaly Isolated from the Can
-2	Centrally Mounted to A Tolerance ±0.25mm on the Header
-R2	Electricaly Isolated and Centraly Mounted

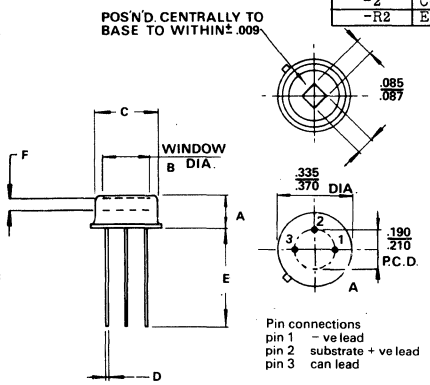

	A	B	C	D	E	F
PD109	.165 .185	.240	.290 .335	.017 .021		
PD109a	.200 .260	.100	.290 .335	.017 .021		
PD109b	.200 .260	.200	.290 .335	.017 .021		
PD109c	.110 .141	.232	.314 .324	.016 .018	.500 MIN	.055 NOM
PD109d	.110 .141	.232	.314 .324	.016 .018	.500 MIN	.047 NOM
PD109e	.240 .259	.232	.314 .324	.016 .018	.500 MIN	.106 NOM

PD128

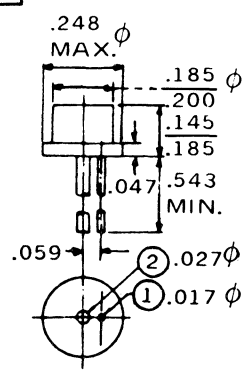

49. OUTLINE DRAWINGS

PD120

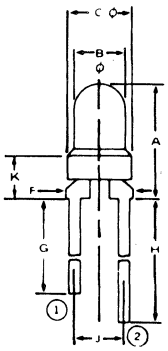

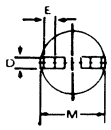

	A	B	C	D	E	F	G	H	J	K	M
PD120	.188 .248	.104 .124	.129 .MAX	.016 .022	.019	.129 .MAX	.551 MIN	.610 MIN	.099		
PD120a	.228 .248	.094 .102	.118 .124			.129 MAX	.551 MIN	.610 MIN	.099		
PD120b	.200 .240	.104 .124	.114 .133		.022 MAX		.551	.610	.100	.070 .110	.129
PD120c	.275	.118	.137	.020			.787	.924	.100	.137	.137
PD120d	.336 .267	.102 .124	.114 .133		.022 MAX		.551	.610	.100	.106 .137	.129 MAX
PD120e	.244 .275	.096 .104	.122 .133		.022 MAX		.551 MIN	.610 MIN	.100	.145 .177	.129 MAX

PD114

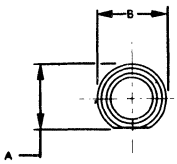

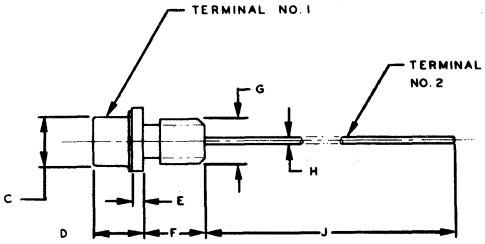

	A	B	C	D	E	F	G	H	J
PD114	.418	.437	.325	.285	.030	.200	10-32	.035	1.09
PD114a	.232	.250	.183	.176	.040	.200	8-32	.030	1.13

SUFFIX	A	B	C	D	E	F	G	H	J
PD114b		.255 MAX		.192 MAX		.311 MAX		.020 MAX	.590 MAX

PD115

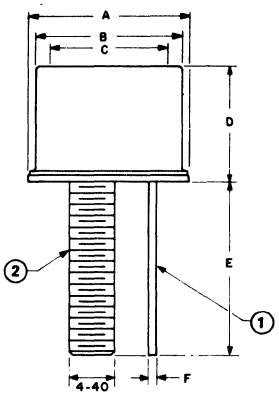

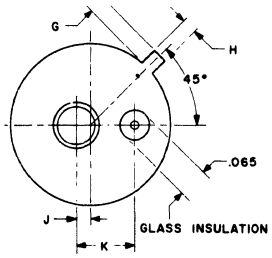

SYMBOL	INCHES	MILLIMETERS
	TYP.	TYP.
A	.355	9.017
B	.325	8.255
C	.260	6.604
D	.255	6.477
E	.375	9.525
F	.017	.432
G	.037	.940
H	.031	.787
J	.030	.762
K	.130	3.302

PD116

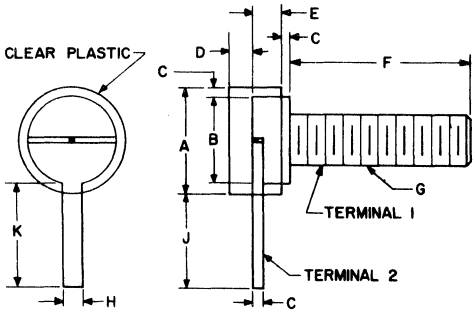

SYMBOL	INCHES	MILLIMETERS
	TYP.	TYP.
A	.220	5.588
B	.180	4.572
C	.020	.508
D	.050	1.270
E	.060	1.524
F	.375	9.525
G	4-40THD.	———
H	.040	1.016
J	.250	6.350
K	.270	6.858

PD118

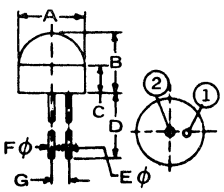

	A	B	C	D	E	F	G
PD118	.120	.130	.079	.490	.012	.018	.035
PD118a	.106 .129	.157	.078	.433 MIN	.011	.017	.035
PD118b	.117	.138	.079	.531	.012	.018	.035
PD118c	.120	.161	.081	.531	.010	.020	.040
PD118d	.120	.140	.080	.490	.010	.020	.035
PD118e	.112 .124	.173 .212	.079	.500 .563	.010 .014	.016 .019	.035
PD118f	.112 .124	.126 .157	.079	.500 .563	.010 .014	.016 .019	.035
PD118g	.125 MAX	.224 .264	.070 .086	.507 .586	.011 TYP	.017 TYP	.027 .043

49. OUTLINE DRAWINGS

PD123

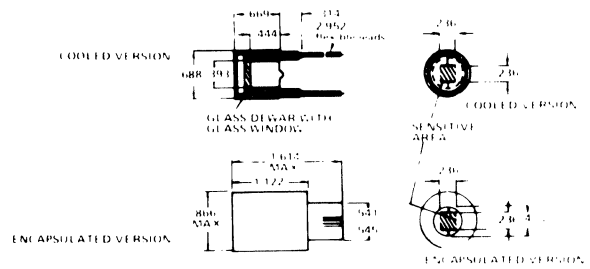

PD7

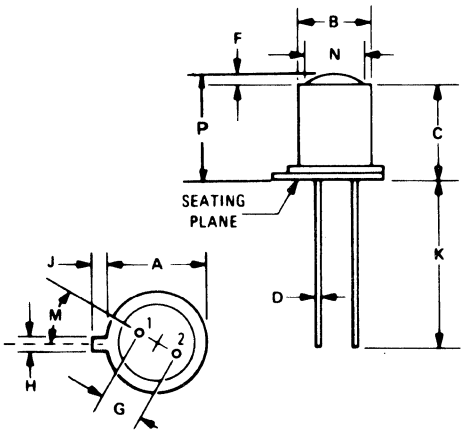

	A	B	C	D	F	G	H	J	K	M	N	P
PD7	.209 .230	.178 .195	.180 .210	.016 .019	.020 .040	.100	.039 .046	.033 .048	.500 MIN	45°	.132 .158	
PD7a	.219	.185	.200		.035	.100	.040	.028	.500 MIN		.140	.235
PD7c	.228 MAX	.177 .188	.271 MAX	.018 MAX	.063 MAX	.099	.045 MAX	.046 MAX	.499 MIN	45°	.177 .188	.271 MAX
PD7d		.185	.283 .307	.017		.100			1.14 1.18			.210 .216
PD7e	.210 .216	.185	.192 .204	.017		.088 .111			.492 .570			.244
PD7f	.210 .216	.185 MAX	.192 .204	.017	.067 .075	.088 .111			.527 .535		.185 MAX	.259 .279
PD7g	.209 .230	.178 .195	.190 .210	.016 .019	.050 MAX	.100	.036 .046	.028 .048	.500 MIN	45°		.240 .260
PD7h	.210	.183	.192	.017	.045	.100			.500		.155	.237
PD7m	.224 MAX	.185	.145	.017	.000	.098	.039	.039	.511	45°	.118	
PD7n	.224	.185	.157	.017	.000	.100	.039	.039	.472	45°	.118	
PD7p	.370	.334	.125	.017	.000	.200	.031	.031	.472	45°	.259	
PD7q	.209 .230	.178 .195		.016 .021		.100 NOM	.031 .044	.036 .046	.500 MIN	45°		.255 MAX
PD7r	.209 .230	.178 .195	.170 .210	.016 .019	.020 .074	.100	.036 .046	.028 .048	1.00 MIN	45°		.190 .284
PD7s	.209 .230	.178 .195	.190 .210	.016 .019	.080 MAX	.100	.036 .046	.036 .046	1.00 MIN	45°		
PD7t	.335 .370	.305 .335	.240 .270	.016 .019	.085 MAX	.200 NOM	.028 .034	.029 .045	.500 MIN	45°		.355 MAX
PD7v	.230 .209	.195 .187	.210 MAX	.019 .016	.050 MAX		.044 .031	.046 .036	1.00 MIN	45°		
PD7w	.212	.185	.181			.100	.039	.039	.551	45°	.157	.248
PD7x	.207 .219	.157 .169	.075 .083	.016 .020		.100	.035 .045	.035 .043	.500 MIN	45°		.106 .130
PD7y	.204 .220	.174 .190	.141 .157	.017 TYP	.027 .051	.092 .107	.039 TYP	.039 TYP	.944 1.02	45°	.149 .165	.169 .208
PD7z	.178 .190		.190 .214	.016 .019					1.0 MIN			.225 .260

PD130

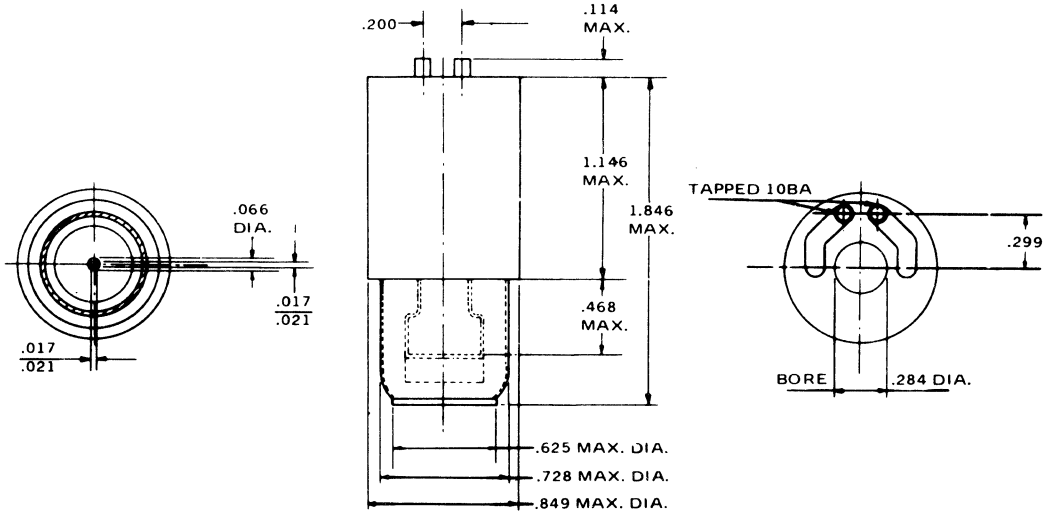

49. OUTLINE DRAWINGS

PD138

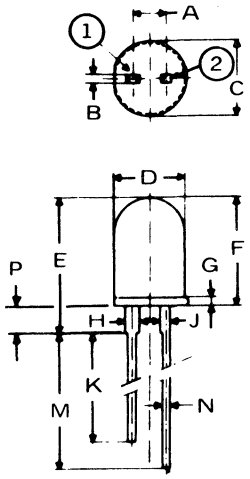

	A	B	C	D	E	F	G	H	J	K	M	N	P
PD138	.099	.022 .027	.220 .240	.179 .204	.389 .448	.311 .370	.025 .035	.039	.029	.499 MIN	.551 MIN	.022 .027	.078 TYP
PD138a	.100	.020 .030	.230	.200	.440	.340	.030		.040 TYP	.900 MIN	.950 MIN	.020 .030	.100

PD142

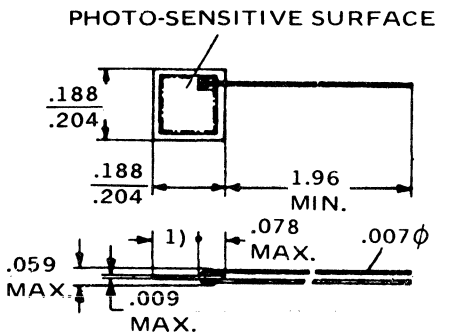

PD144

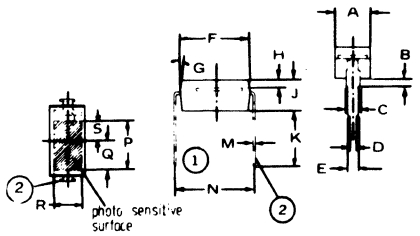

	A	B	C	D	E	F	G	H	J	K	M	N	P	Q	R	S
PD144	.076 .086	.019	.035 .043	.015	.027	.169 .185	5°	.019	.070 .078	.118 .137	.007	.200	.125	.070	.070	
PD144d	.149 .157	.019	.035 .043	.015	.027	.169 .177	0° 5°	.019	.070 .078	.118 .137	.007	.200	.108	.054	.108	.054
PD144e	.070 .078	.019	.035 .043	.015	.027	.169 .177	0° 5°	.019	.070 .078	.118 .137	.007	.200	.039	.019	.039	.019
PD144f	.051 .059	.019	.035 .043	.015	.027	.169 .177	0° 5°	.019	.070 .078	.118 .137	.007	.200	.049	.024	.029	.024
PD144g	.078 .086	.019	.035 .043	.015	.027	.169 .177	0° 5°	.019	.070 .078	.118 .137	.007	.200	.120	.060	.064	.060
PD144h	.146 .157		.016 .020	.016 .020		.169 .177	.020 TYP	.020 TYP	.020 TYP	.118 .138	.008 .014	.193 .213	.108 MAX		.108 MAX	

PD145

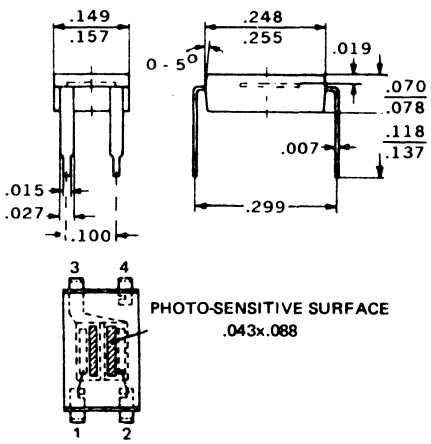

PD146

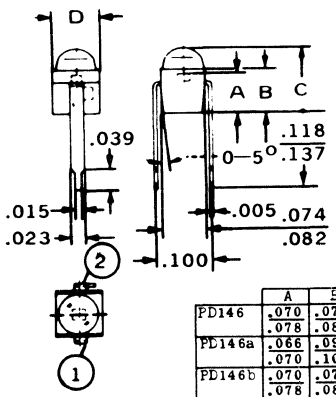

	A	B	C	D
PD146	.070 .078	.078 .086	.122 MAX	.078 .086
PD146a	.066 .070	.098 .106	.137 MAX	.078 .086
PD146b	.070 .078	.078 .086	.122 MAX	.082 .090
PD146c	.066 .070	.098 .106	.137 MAX	.082 .090

49. OUTLINE DRAWINGS

PD160

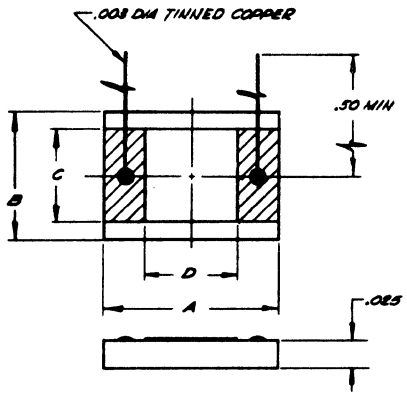

	A	B	C	D	THICKNESS
PD160	.098	.098	.039	.039	.029
PD160a	.177	.098	.078	.078	.029
PD160b	.149	.196	.118	.118	.029
PD160d	.098	.098	.039	.039	.039
PD160e	.117	.098	.078	.078	.039
PD160f	.196	.149	.118	.118	.039
PD160g	.110	.098	.039	.039	.025
PD160h	.177	.098	.078	.078	.025
PD160j	.149	.196	.118	.118	.025
PD160k	.256	.177	.157	.157	.025

PD161

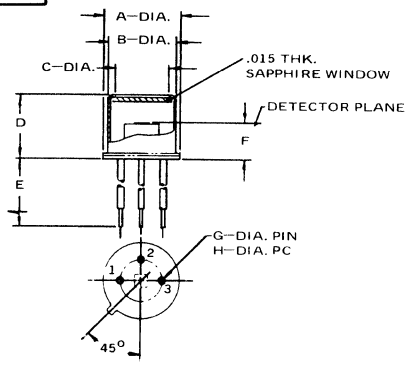

	A	B	C	D	E	F	G	H
PD161	.212	.185	.125	.205	1.500 MIN	.120	.018	.200
PD161a	.360	.325	.260	.240	.500 MIN	.125	.018	.200
PD161b	.360	.325	.240	.177	1.500 MIN	.070	.018	.200
PD161c	.212	.185	.125	.150	1.500 MIN	.060	.018	.100
PD161d	.360	.325	.250	.165 MAX	.500 TYP	.130	.019 MAX	.230

PD162

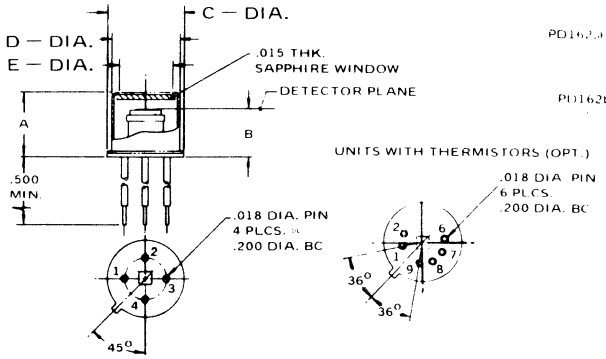

PIN FUNCTIONS

	PIN NO.	COLOR	FUNCTION
PD162a,d,e	2 & 3	WH.	DETECTOR
	1	RED	COOLER (+)
	4	BLK.	COOLER (−)
PD162b,c	1 & 2	YEL.	THERMISTOR
	6 & 7	WH.	DETECTOR
	8	BLK.	COOLER (−)
	9	RED	COOLER (+)

PD165

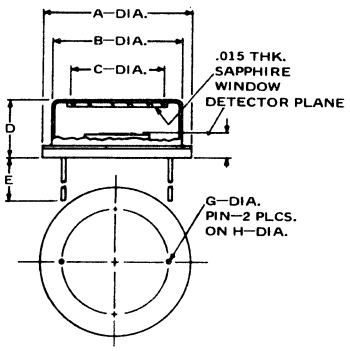

	A	B	C	D	E	F	G	H
PD165	.550	.490		.195	1.500		.020	
PD165a	.575	.497	.360	.200	.500 MIN	.090	.018	.420
PD165b	1.250	1.100	.810	.270	.500	.072	.040	.750
PD165c	.575	.497	.360	.220	1.500	.070	.018	.420
PD165d	.550	.486	.430	.230	1.500		.019	.295
PD165e	.550	.490	.430	.221	1.500		.018	.297
PD165f	1.000	.850	.630	.353	.737		.030	.662

PD166

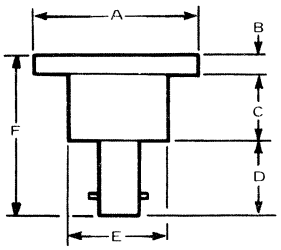

	A	B	C	D	E	F
PD166	.980	.175	.390	.470	.626	1.035
PD166a	.975	.175	.475	.450	.625	1.100
PD166b	1.675	.250	.400	.500	.620	1.150
PD166c	1.230		.325		.625	1.325
PD166d	1.230		.400			1.180

PD167

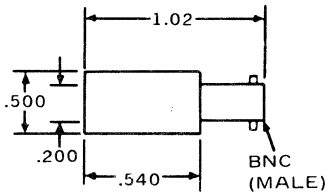

49. OUTLINE DRAWINGS

PD168

	LENGTH A
PD168	5.025
PD168a	10.025

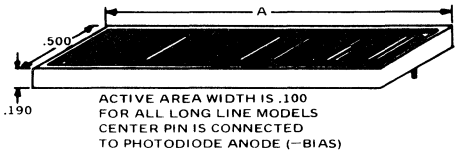

ACTIVE AREA WIDTH IS .100
FOR ALL LONG LINE MODELS
CENTER PIN IS CONNECTED
TO PHOTODIODE ANODE (−BIAS)

PD169

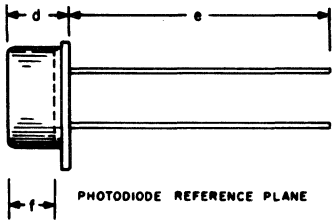

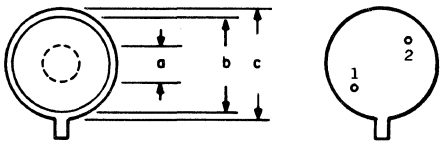

* PD169d,e — ACTIVE AREA (a) CHANGES ACCORDING TO TYPE NO.

	A	B	C	D	E	F	PIN CIRCLE RADIUS	WINDOW THICKNESS	WINDOW DIA	LEAD DIA
PD169	.100	.331	.358	.165	1.50	.091	.098	.052	.240	.018
PD169a	.215	.421	.551	.200	1.50	.136	.149	.052	.421	.018
PD169b	.040	.180	.240	.200	1.50	.150	.052	.035	.138	.018
PD169c	.444	.819	1.21	.290	.500	.212	.374	.063	.826	.040
PD169d	*	.325	.360	.177	.500 MIN		.100	.015	.240	.018
PD169e	*	.185	.212	.150	.500 MIN		.050	.015	.125	.018
PD169f		.325	.360	.177	1.500		.100	.015	.240	.018
PD169g		.185	.212	.150	1.500		.050	.015	.125	.018
PD169h	.275	.330	.362	.157	.787	.090	.110	.039	.303	.017
PD169j		.178 .190	.205 .230	.130 .185	1.000 MIN	.130 .155	.050 NOM			.016 .019
PD169k		.185	.212	.200	1.500		.050		.160	.018
PD169m		.325	.360	.180	1.500		.100		.262	.018
PD169n	.118	.177 .192	.204 .220	.139 .155	.511 .590	.078 .094	.059		.118	.017 TYP

PD171

NOTE 1: (PD171)
LEAD DIAMETER IS CONTROLLED IN THE ZONE BETWEEN .050 AND .250 FROM THE SEATING PLANE, BETWEEN .250 AND END OF LEAD A MAX. OF .021 IS HELD.

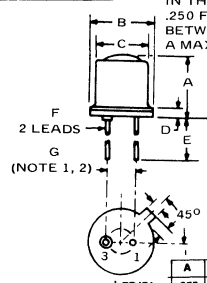

NOTE 2: (PD171a)
LEADS HAVING MAX. DIAMETER .021" MEASURED IN GAGING PLANE OF THE DEVICE SHALL BE WITHIN .007" OF THEIR TRUE POSITION RELATIVE TO A MAX. WIDTH TAB.

	A	B	C	D	E	F	G	H	J
PD171	.255 MAX	.209 .230	.178 .195	.040 MAX	.500 MIN	.016 .019	.100 NOM	.031 .044	.036 .046
PD171a	.255 MAX	.209 .230	.180 .187	.030 MAX	1.00 MIN	.016 .021	.100 NOM	.031 .044	.036 .046
PD171b	.155 MAX	.209 .230	.180 .187	.030 MAX	1.00 MIN	.016 .021	.100 NOM	.031 .044	.036 .046
PD171c	.224 .247	.208 .219	.180 .194		.500 MIN	.020 DIA	.100	.040	

PD172

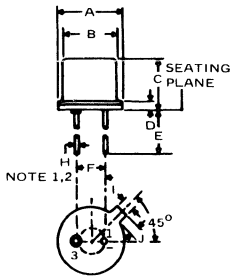

NOTE 1: LEAD DIAMETER IS CONTROLLED IN THE ZONE BETWEEN .050 AND .250 FROM THE SEATING PLANE, BETWEEN .250 AND END OF LEAD A MAX. OF .021 IS HELD.

NOTE 2: LEADS HAVING MAX. DIA. .021" (.533MM) MEASURED IN GAUGING PLANE .054" − .001" + .000 (137 − .025 + .000MM) BELOW THE REFERENCE PLANE OF THE DEVICE SHALL BE WITHIN .007" (.178MM) THEIR TRUE POSITION RELATIVE TO A MAX. WIDTH TAB.

	A	B	C	D	E	F	H	I	J
PD172	.209 .230	.178 .195	.155 MAX	.040 MAX	.500 MIN	.100 NOM	.016 .019	.031 .044	.036 .046
PD172a	.209 .230	.180 .187	.155 MAX	.030 MAX	1.00 MIN	.100 NOM	.016 .021	.031 .044	.036 .046

PD174

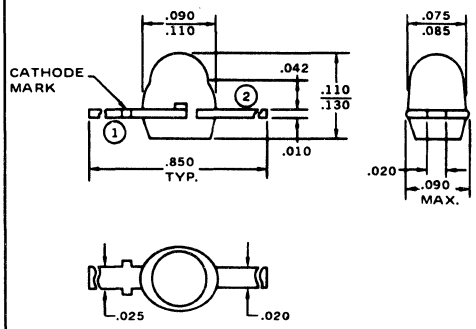

PD177

	A	B	C
PD177	.870	.100	.750

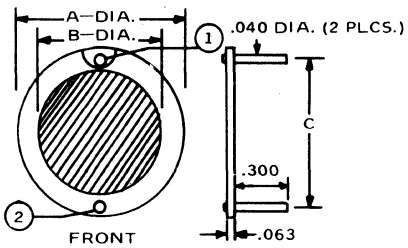

PD180

	A
PD180	.11 (.0046) .22 (.0085)
PD180a	.18 (.007) .23 (.009)
PD180b	Tape and reel packaging

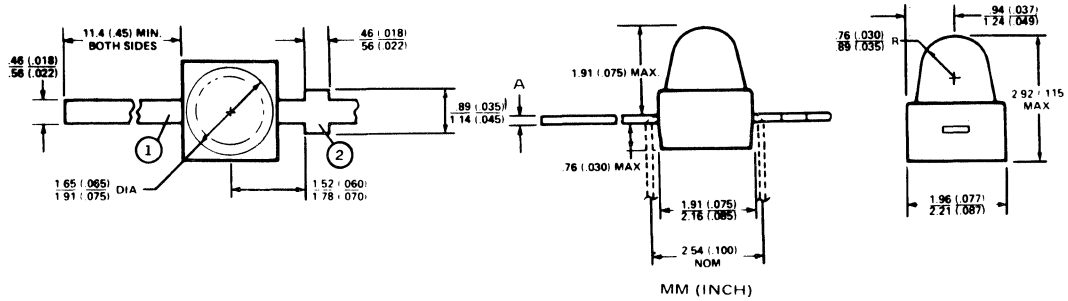

MM (INCH)

49. OUTLINE DRAWINGS

PD182

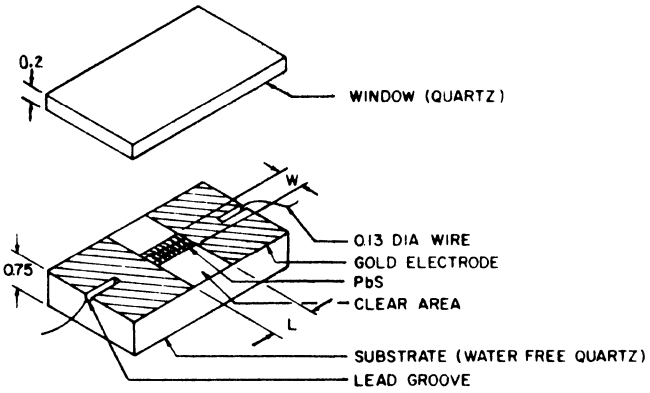

NOTE I: ALL DIMENSIONS IN MILLIMETERS (mm), 1mm = 0.03937 INCHES

SIZE NUMBER	SENSITIVE AREA L x W (mm)	SUBSTRATE SIZE (mm)
AVAILABLE SIZES FOR TYPES 1, 2, AND 3		
01	.25 x .25	6.3 x 6.3
02	.5 x .5	6.3 x 6.3
03	1.0 x 1.0	6.3 x 6.3
04	1.5 x 1.5	6.3 x 6.3
05	2.0 x 2.0	6.3 x 6.3
06	3.0 x 3.0	6.3 x 6.3
07	4.0 x 4.0	6.3 x 6.3
08	5.0 x 5.0	9.5 x 9.5
09	6.0 x 6.0	9.5 x 9.5
10	8.0 x 8.0	13.0 x 13.0
11	10.0 x 10.0	13.0 x 13.0
12	.25 x 1.0	6.3 x 6.3
13	1.0 x 2.0	6.3 x 6.3
14	1.0 x 3.0	6.3 x 6.3
15	1.0 x 4.0	6.3 x 6.3
21	.25 x 2.5	6.3 x 6.3
AVAILABLE SIZES FOR TYPES 4 AND 5		
16*	1.5 x 1.5	6.3 x 6.3
17	4.0 x 4.0	6.3 x 6.3
18**	.25 x 1.0	6.3 x 6.3

* TYPE 4 ONLY ** TYPE 5 ONLY

PD183

	Sensitive Area in. (mm)	Overall Size in. (mm)
PD183	.025 x .015 (.64 x .38)	.250 x .125 (6.4 x 3.2)

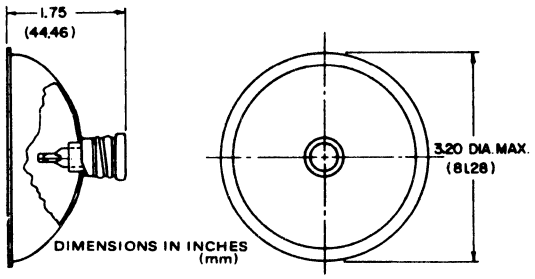

PD183a Same detector mounted on a bayonet base.

PD183b Same base-mounted detector in 3" diameter collector providing optical gain of approximately 500.

PD183c Same detector-collector assembly with 3" diameter filter.

PD184

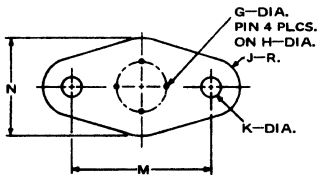

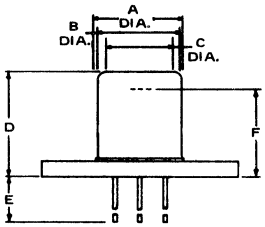

	A	B	C	D	E	F	G	H	J	K	M	N
PD184	.360	.325	.260	.418	.500 MIN	.318	.018	.200	.114	.125	.562	.390
PD184a	.360	.330	.265	.290	.500 MIN	.218	.018	.200	.114	.125	.562	.390
PD184b		.330		.290	.500	.230	.018	.200	.114	.125	.562	.390

PD187

ELEMENT L (mm) x W (mm)	SUBSTRATE L (mm) x W (mm)
1 x 1	2 x 3
2 x 2	2.5 x 3.5
3 x 3	4 x 5
4 x 4	5 x 6

Substrate thickness = 0.5mm.

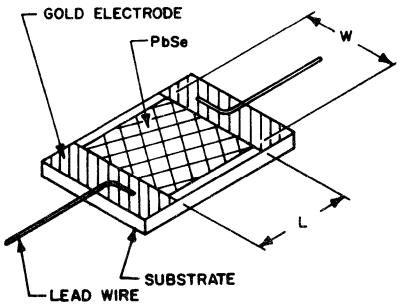

49. OUTLINE DRAWINGS

PD189

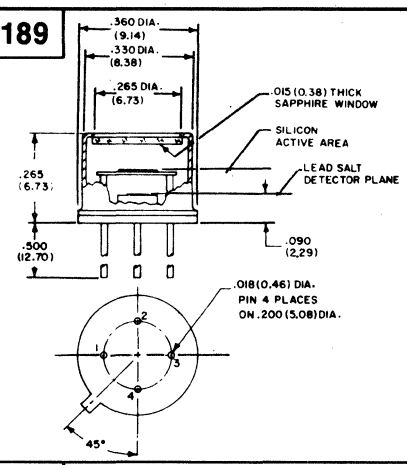

PD197

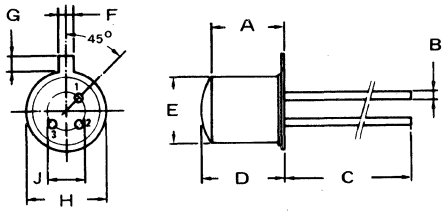

	A	B	C	D	E	F	G	H	J
PD197	.208 MAX	.021 MAX	.500 MIN	.236 MAX	.170 MAX	.045 MAX	.046 MAX	.229	.100

PD199

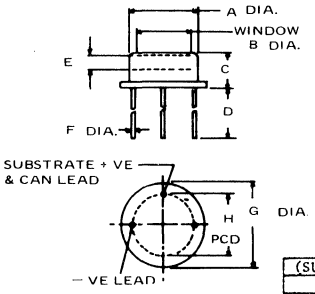

	A	B	C	D	E	F	G	H
PD199	.443 / .523	.374	.188 / .250	.500 MIN	.098 NOM	.017 / .020	.550 / .649	.400 / .440
PD199a	.531 / .570	.437	.157 / .177	.500 MIN	.098 NOM	.016 / .018	.590 / .629	.393 / .433
PD199b	.543 / .555	.437	.157 / .177	.499 MIN	.098 NOM	.016 / .018	.598 / .614	.390 / .423
PD199c	.543 / .555	.437 DIA	.157 / .177	.500 MIN	.059 NOM	.016 / .018	.598 / .614	.390 / .423 PCD

(SUFFIX)	DIODE OPTION
-R	Electrically Isolated from the Can
-2	Centrally Mounted to A Tolerance ± 0.25mm on the Header
-R2	Electrically Isolated and Centrally Mounted
B	Bug Eye Lens

PD200

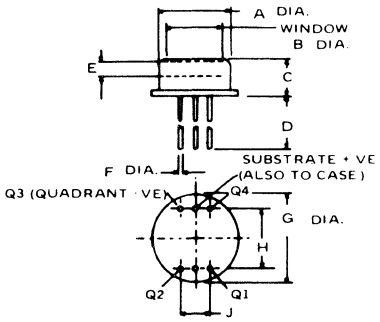

	A	B	C	D	E	F	G	H	J
PD200a	.531 / .570	.437	.157 / .177	.500 MIN	.098 NOM	.016 / .018	.590 / .629	.393	.196

PD201

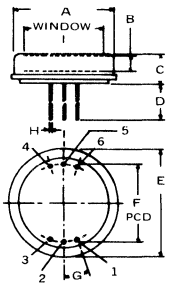

	A	B	C	D	E	F	G	H	I
PD201,a	.984 DIA	.149 NOM	.236	.500 MIN	1.02 DIA	.747	20° TYP	.020 DIA	.747 DIA
PD201b	.968 DIA	.090 NOM	.188	.502 MIN	1.02 DIA	.748	20° TYP	.020 DIA	.747 DIA

PIN	1	2	3	4	5	6
PD201	Q1	Guard Ring	Q2	Q3 (Quadrant -VE)	Substrate +VE	Q4 (also to case)
PD201a				-VE	Substrate +VE (also to case)	Guard Ring
PD201b	Q1			-VE LEAD	Substrate +VE (also can lead)	

PD202

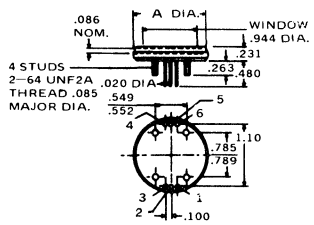

PIN	1	2	3	4	5	6
PD202a				-VE	Substrate+VE (also to case)	Guard Ring
PD202a	A 1.248 / 1.251					

PD203

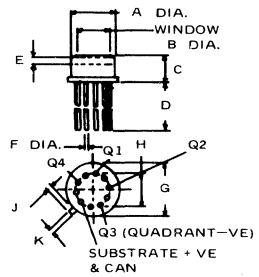

	A	B	C	D	E	F	G	H	J	K
PD203a	.314 / .324	.232	.165 / .185	.500 MIN	.078 NOM	.016 / .018	.334 / .370	.228	.029 / .044	.028 / .035

49. OUTLINE DRAWINGS

PD206

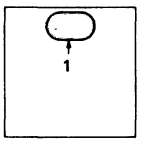

LEAD 2 –
ON BOTTOM
OF CHIP.

PD208

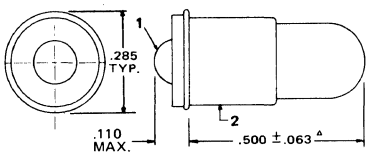

PD208a-△.562 ±.063

PD209

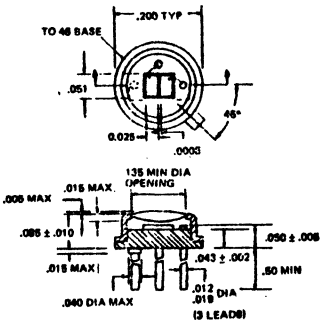

PD211

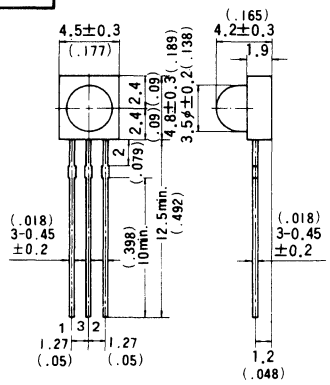

PD212

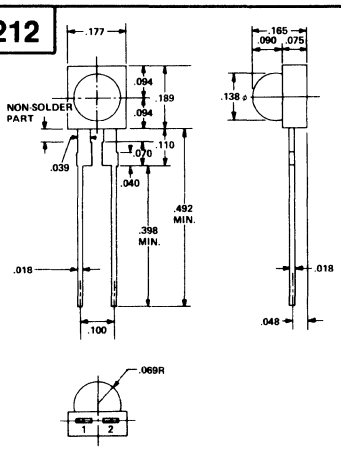

PD214

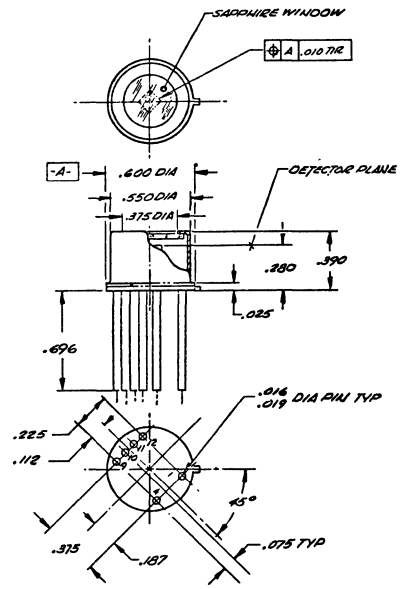

PIN CONNECTIONS

PIN NO.	COLOR	FUNCTION
1.	BLACK	COOLER (NEG.)
4.	RED	COOLER (POS.)
9	WHITE	DETECTOR
10	YELLOW	THERMISTOR
11	YELLOW	THERMISTOR
12	WHITE	DETECTOR

NOTE: AVAILABLE
WITHOUT THERMISTORS.

PD215

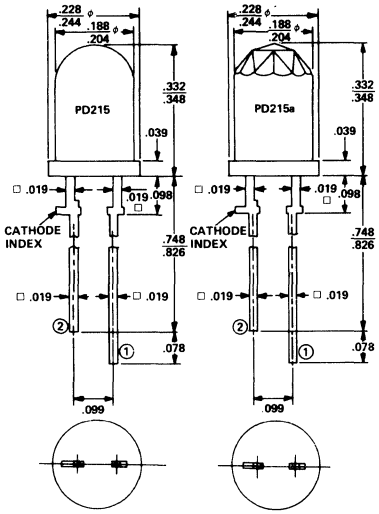

PD1372

PACKAGE DIMENSIONS

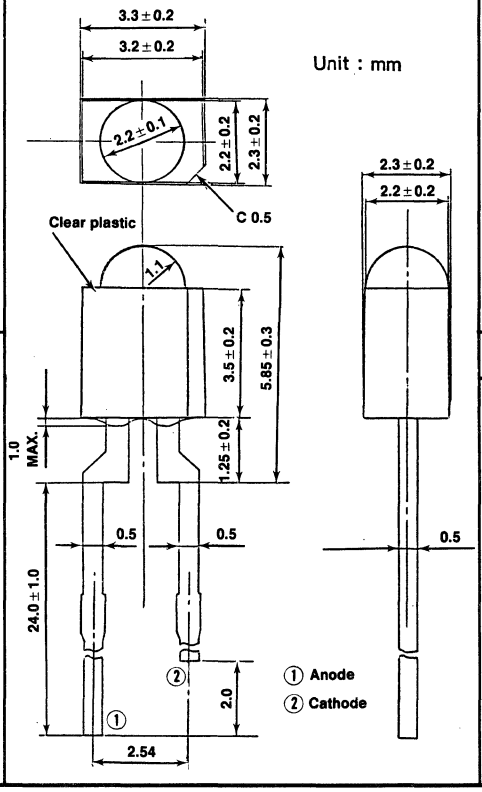

49. OUTLINE DRAWINGS

PD232

	A	B	C	D	E	F	G	H	J	K	M	N
PD232	.200	.338	.905	.059	.206	.043	.039	.096	.100	.025	.228	.025
PD232a	.200	.338	.905	.059	.206	.043	.039	.086	.100	.025	.228	.025
PD232b	.200	.338	.905	.059	.177	.043	.039	.125	.100	.025	.240	.025
PD232c	.185 .200	.334 .374	.656 .715	.078 MAX		.039		.078 .137	.100	.016 .022	.228	
PD232d	.120	.215	.500 MIN				.025		.050	.020	.155	.020
PD232e	.200	.340	1.00		.215		.040			.020	.240	.020
PD232f	.193 .200	.339	.457			.039	.039	.118	.100	.020	.220 .228	.020
PD232g	.193 .200	.256	.425			.039	.039	.169	.100	.020	.220 .228	.020
PD232h	.193 .200	.339	.481			.039	.039	.142	.100	.020	.220 .228	.020
PD232j	.232	.362	.669	.100		.047	.035	.137	.100		.022	.017
PD232k	.232	.362	1.04	.100		.047	.035	.137	.100		.022	.017

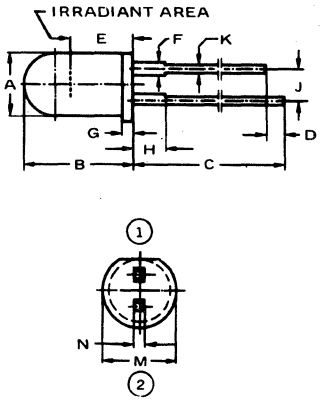

PD235

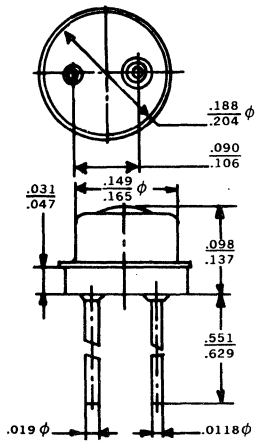

PD236

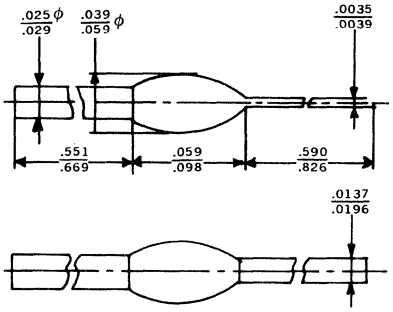

PD237

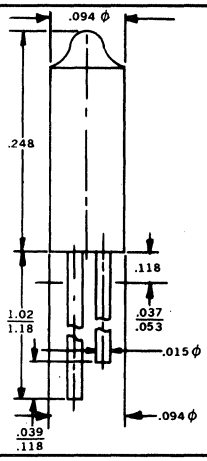

PD238

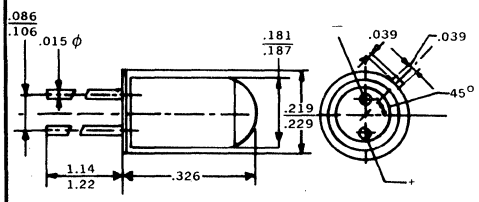

PD239

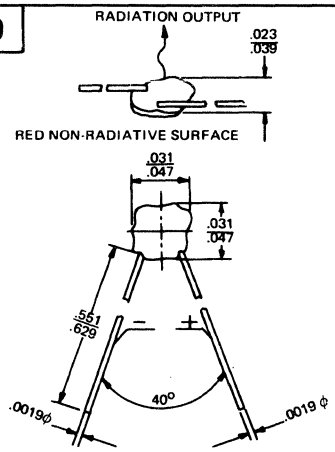

PD344

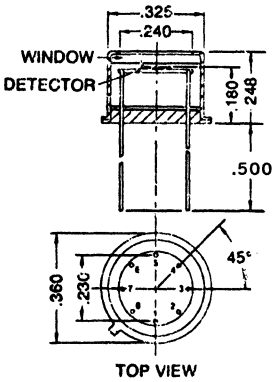

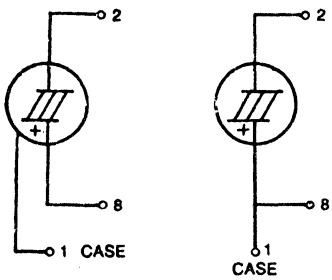

PD344 PD344a

PD256

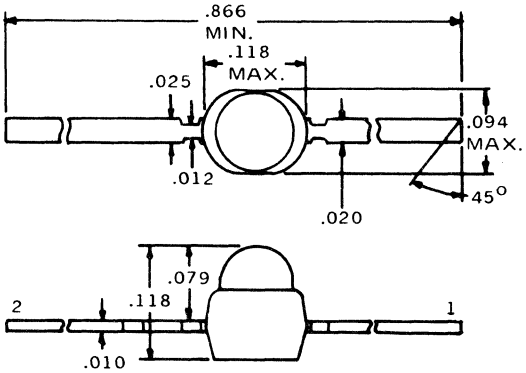

49. OUTLINE DRAWINGS

PD257

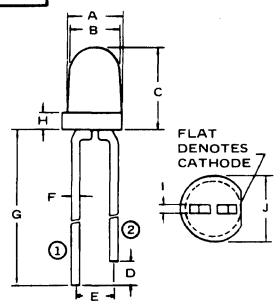

	A	B	C	D	E	F	G	H	I	J
PD257	.130	.118	.197	.059	.090	.021	.750	.039	.021	.187
PD257a	.135	.115	.190 .210		.090	.018 .022	.500 MIN	.020 .060	.020	.140 .160
PD257b			.220 .240		.090	.020	.500 MIN	.020 .040	.020	.177 .197
PD257c			.190 .210		.090	.020	.500 MIN	.020 .040	.020	.140 .160
PD257d	.150 .160	.115 .125	.180 .200	.070 NOM	.100 TYP		.570 MIN	.030 MIN	.015 .025	
PD257e	.130	.118	.197	.059	.090	.020	.750	.039	.020	.157
PD257f	.120		.200	.050	.100	.014 .018	1.150 MIN	.030	.013 .017	.150
PD257g	.110 .130		.200 NOM	.060	.090	.020	.560 MIN	.020 .040	.020	.140 .160

PD338

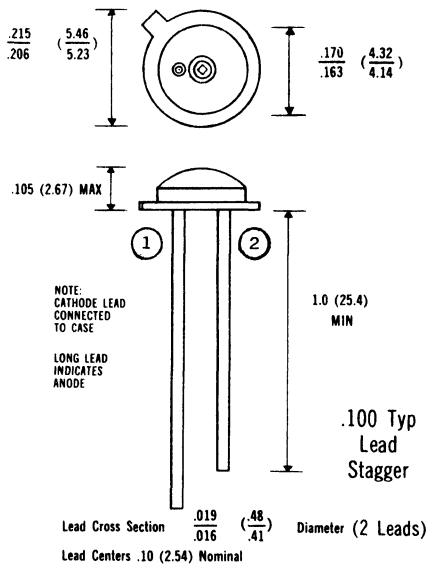

PD258

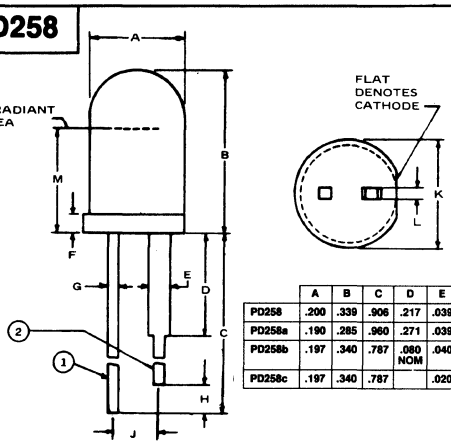

	A	B	C	D	E	F	G	H	J	K	L	M	NOTE
PD258	.200	.339	.906	.217	.039	.039	.025	.059	.100	.228	.026	.177	
PD258a	.190	.285	.960	.271	.039	.050	.025	.059	.100	.230	.025	.122	
PD258b	.197	.340	.787	.080 NOM	.040	.039	.030	.079	.100	.228	.050		WIRE WRAP LEADS
PD258c	.197	.340	.787		.020	.039	.020	.079	.100	.228	.050		STRAIGHT LEADS/NO STANDOFFS

PD262

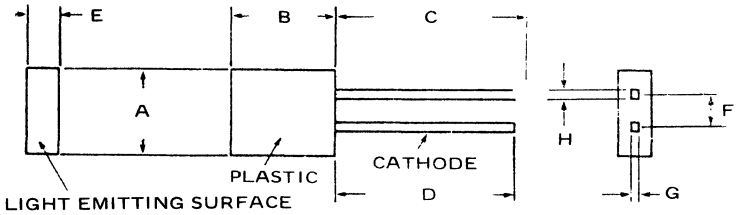

	A	B	C	D	E	F	G	H
PD262	.275 .295	.290 .315	1.05 MIN	1.00 MIN	.090 .100	.100 NOM	.013 .017	.014 .025
PD262a	.196	.275	1.02 MIN	.972 MIN	.110	.098 NOM	.019	.019
PD262b	.275 .295	.290 .315	1.05 MIN	1.00 MIN	.090 .100	.100 NOM	.014 .025	.014 .025
PD262c	.187 .207	.265 .285	1.027 MIN	.972 MIN	.110	.100 NOM	.020 NOM	.020 NOM
PD262d	.197	.197	.591	.591	.128	.102	.018	.018
PD262e	.148 .167	.265 .285		.500 MIN	.075 .092	.085 .096	.016 .024	.016 .024
PD262f	.187 .207	.265 .285	1.050 MIN	1.000 MIN	.226 .246	.100 NOM	.015 .025	.015 .025
PD262g	.275 .295	.293 .313	1.050 MIN	1.000 MIN	.085 .105	.093 .104	.016 .024	.016 .024
PD262h	.192 .202	.285 .305	1.050 MIN	1.000 MIN	.074 .082	.100	.019 .021	.019 .021
PD262k	.185 .215	.324 .354	1.028 1.058	.985 1.015	.200 NOM	.200 NOM	.098 NOM	
PD262m	.202	.401	1.00	.944	.202	.100	.022	.022
PD262n	.185 .196	.374 .389	.551 MIN	.500 MIN	.092 .098	.100	.022	.022
PD260o	.188 .204	.267 .283	.570 .649	.570 .649	.070 .086	.092 .107	.019 TYP	.019 .031

PD264

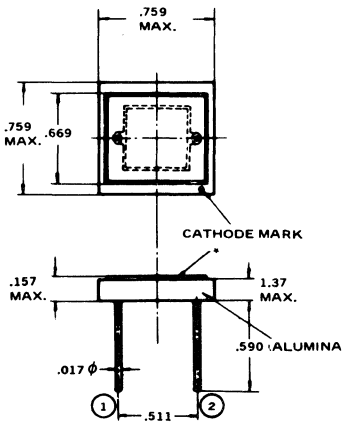

PD264 — * QUARTZ FILTER
PD264a — * TRANSPARENT GLASS
PD264b — * VISIBLE LIGHT PASS FILTER

49. OUTLINE DRAWINGS

PD265

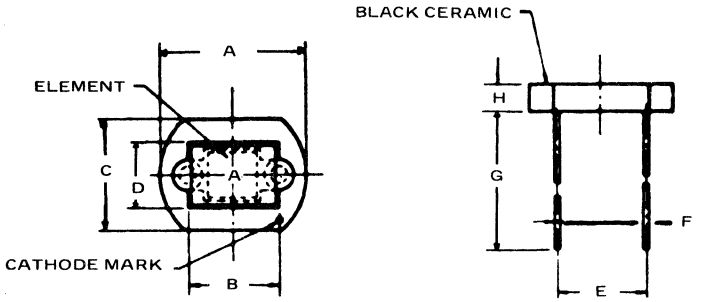

	A	B	C	D	E	F	G	H	ACTIVE AREA
PD265	.318 MAX	.192	.240	.137	.196	.017	.354	.059	.084x.088 in.
PD265a	.318 MAX	.192	.240	.137	.196	.017	.354	.059	.044x.076 in.
PD265b	.236	.118	.197	.110	.118	.019	.157	.063	
PD265c	.236		.197		.118	.018	.354	.059	
PD265d	.226 .236	.169	.118 .204	.114	.118	.015 .019	.157 .236	.070 MAX	.061x.061 in.
PD265e	.224 .240	.169	.118 .204	.114	.118	.015 .019	.157 .236	.070 MAX	.061x.061 in.
PD265f	.224 .240	.165 .173	.189 .205	.102 .110	.118	.014 .022	.197 .201	.053 .063	
PD265g	.268 .276	.157	.205 .213	.142	.197	.010 .014	.228 MIN	.065 .075	.112x.096 in.
PD265h	.315 MAX	.193	.226 .236	.138	.189 .205	.018	.315 .394	.075 MAX	

PD266

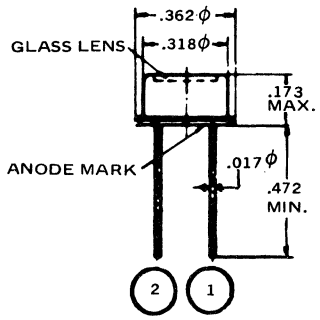

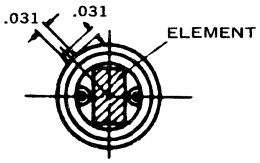

ACTIVE AREA
PD266: .118x.196 IN.
PD266a: .314x.236 IN.

PD271

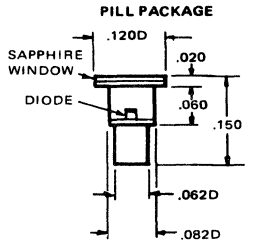

PD271: BOTH PACKAGES
PD271a: BNC PACKAGE ONLY

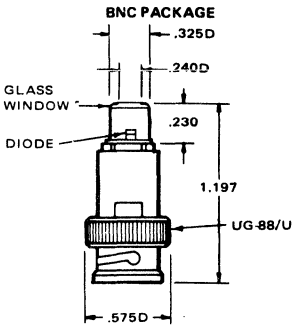

PD272

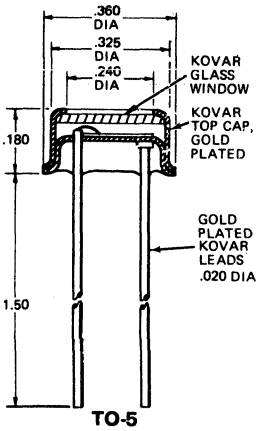

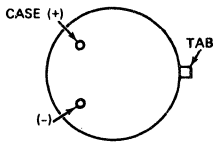

BIAS ARRANGEMENT
BOTTOM VIEW

PD273

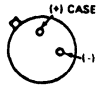

BIAS ARRANGEMENT
BOTTOM VIEW

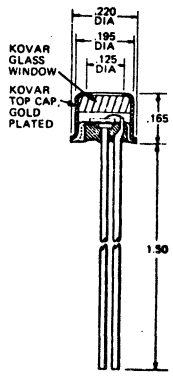

PD274

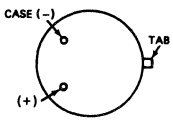

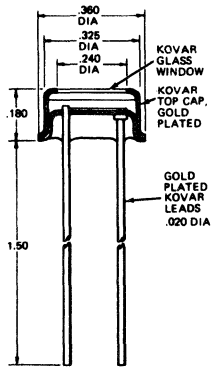

PD275

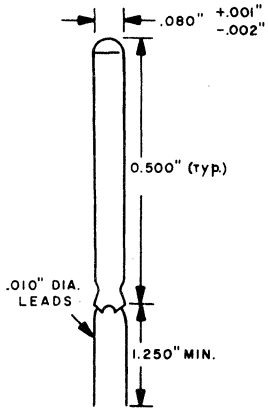

NOTE
Red lead - "P" electrode (irradiated surface)

49. OUTLINE DRAWINGS

PD278

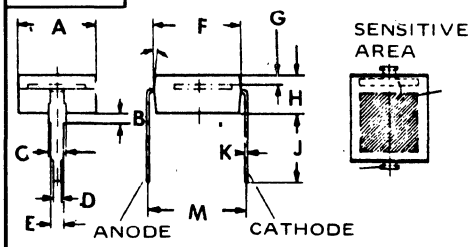

	A	B	C	D	E	F	G	H	J	K	M
PD278	.156 .158	.020	.035	.015	.028	.176 .178	.020	.078	.138	.010	.200
PD278a	.087	.020	.035 .043	.016	.028	.169 .177	.020	.071 .079	.118 .138	.008	.200
PD278b	.150 .160	.020 MIN	.040 NOM		.020 NOM	.170 .180		.070 .080	.120 MIN	.012 NOM	.210 .230
PD278c	.157	.023 NOM	.040	.024	.024	.177	.019 .025	.075	.153	.010	.200

PD279

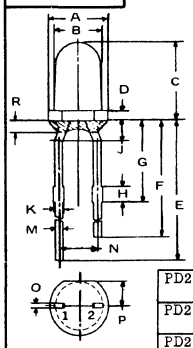

	A	B	C	D	E	F	G	H	J	K	M	N	P	Q	R
PD279	.141 .157	.110 .125	.188 .204	.023	.610 MIN	.570 MIN	.200 .240	.039	.066 MAX	.031 MAX	.019	.094	.066	.017	.059 MAX
PD279a	.141 .157	.110 .125	.188 .209	.023	1.03 MIN	.992 MIN	.200 .240	.039		.045 MAX	.019	.100	.066	.019	.059 MAX
PD279b	.181 .197	.150 .165	.229 .244	.039	1.03 MIN	.987 MIN	.189 .229	.039		.043 MAX	.019	.100		.019	.059 MAX
PD279c	.142 .157	.114 .130	.181 .196	.051	1.05 MIN	.972 MIN			.067 .098	.024	.016	.100			

PD280

	A	B	C	D	E	F	G	H	J	K	M	N	P	Q
PD280	.190 .202	.330 .346	.029	.531 MIN	.492 MIN	.129 .169	.039	.019	.031	.100	.218 .234	.019	.098	.059 MAX
PD280a	.190 .202	.330 .346	.029	.964 MIN	.925 MIN	.129 .169	.039	.019	.031	.100	.218 .234	.019	.098	.059 MAX
PD280b	.197	.341	.039	.551	.473	.164	.071	.024	.024	.100	.236		.094	
PD280c	.177 .200	.275 .354	.031	1.00 MIN	.944 MIN	.098 .137		.025	.031	.100	.208 .232	.025		
PD280d	.205 MAX	.341 .348	.039	.535	.476	.175	.071 .083	.055 .079		.100	.236 .244		.098	
PD280e	.197 .205	.291 .307	.039	.984 MIN	.945 MIN	.177 .197	.031	.019 MAX	.031	.100	.212 .228	.019		.059 MAX
PD280f	.189 .205	.293 .309	.039	.531 TYP	.453 TYP	.130 .154	.039	.018 .030		.100	.220	.018 .030		
PD280g	.189 .200	.323 .354		1.023 1.102						.100	.216 .232	.016 .023		
PD280h	.154 .161	.181 .200		1.21	1.09 1.15			.020 .026		.05	.146 .157	.015 .020		
PD280i	.193 .200	.339		2.5	1.0			.020 .026		1.0	.224 .232	.016 .024		
PD280j	.177 .200	.314 .354	.031	1.02	24	.150		.026	.031	.100	.209 .232			.031 MAX
PD280k	.193 .201	.339 NOM		1.06 NOM				.031		.100	.222 .230	.019 .020		.028
PD280L	.193 .201	.339 NOM		1.05 NOM				.031		.100	.222 .230	.019 .020		.028

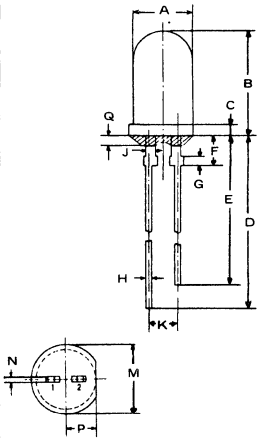

PD281

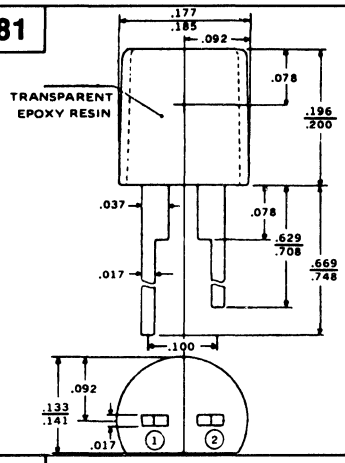

PD283

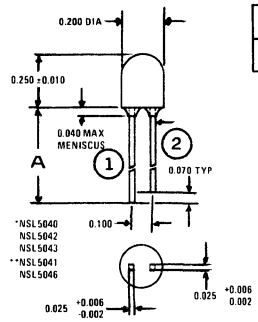

	A
PD283	.915 .975
PD283a	.945 1.005

Note: ±0.015 tolerance on all dimensions unless otherwise specified.

PD284

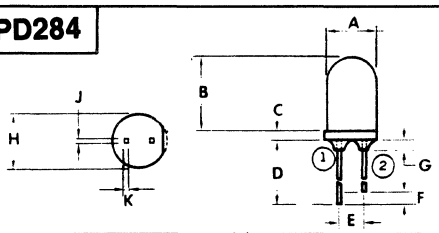

	A	B	C	D	E	F	G	H	J	K
PD284	.180 .203	.310 MAX	.030 .055	1.070 1.130	.100	.070 TYP	.040 MAX	.224 .236	.018 .026	.018 .026
PD284a	.115 .125	.130 .155	.016 .030	.710 .750	.090	.070 TYP	.060 MAX	.144 .156	.018 .026	.018 .026
PD284b	.115 .125	.169 .181	.010 .035	.710 .750	.090	.070 TYP	.060 MAX	.144 .156	.018 .026	.018 .026
PD284c	.115 .125	.175	.015 .040	.730	.090	.070	.040 MAX		.018 .026	
PD284d	.193 .200	.295 .303		1.14	.100	.059		.224 .232	.016 .024	
PD284e	.193 .201	.295 .303		1.05 NOM	.100	.059	.028 MAX	.222 .230	.019 .020	

PD285

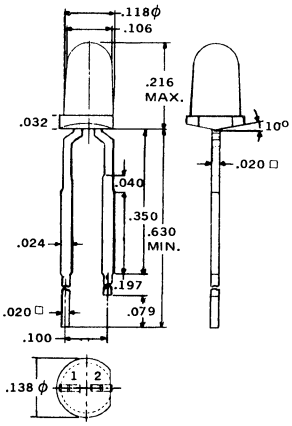

PD286

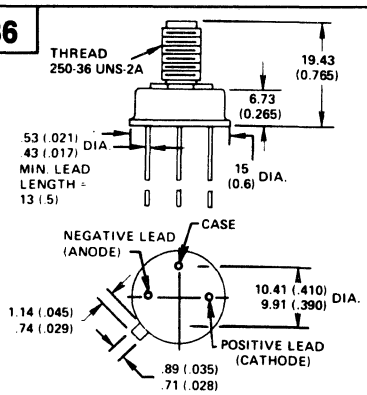

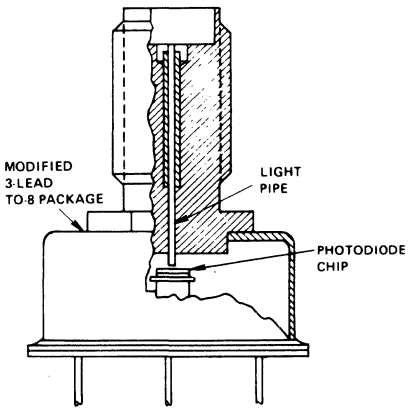

Dimensions in millimeters.
Dimensions in parentheses are in inches.

PD288

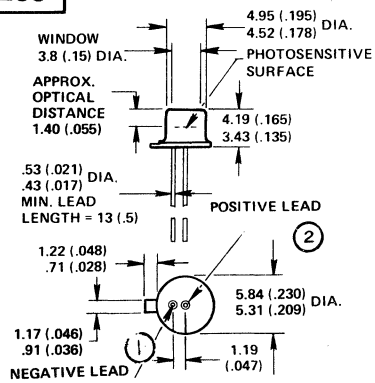

49. OUTLINE DRAWINGS

PD355

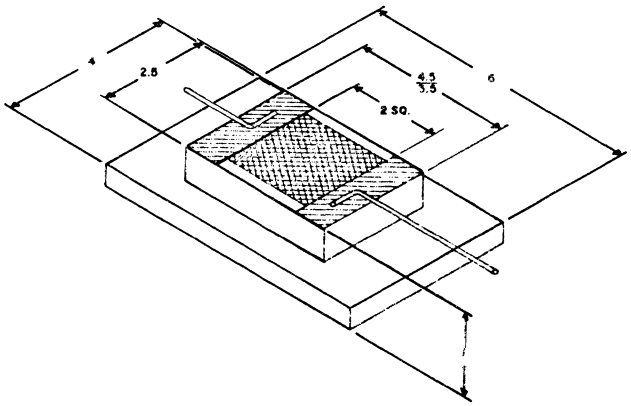

PD292

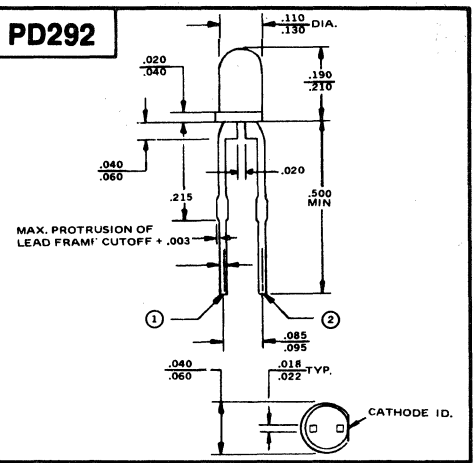

PD294

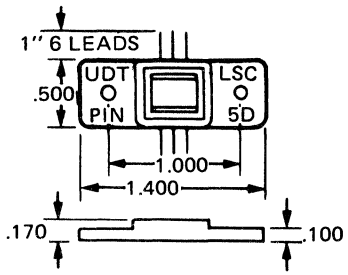

PD295

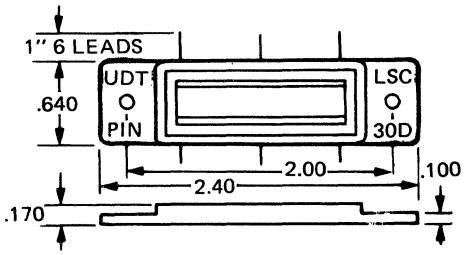

PD296

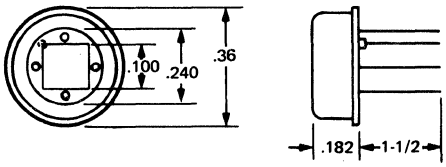

PD297

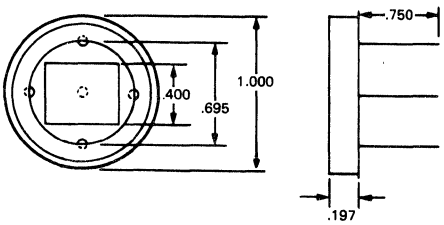

PD298

	L	W
PD298	1.54	.380
PD298a	1.54	.580
PD298b	2.13	.630

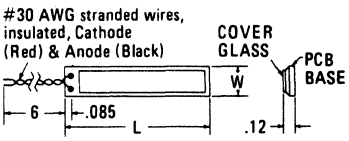

PD299

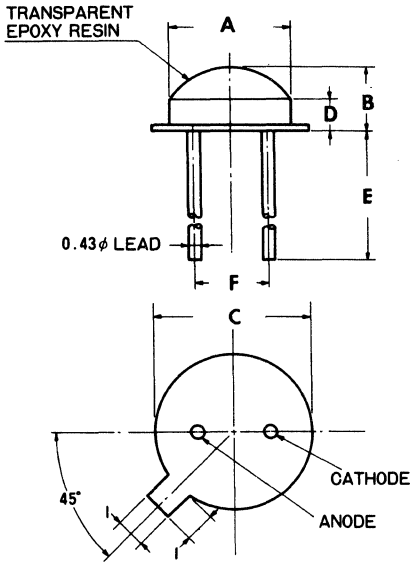

Suffix	A	B	C	D	E	F
PD299	.165		.212	.045	1.1	
PD299a	.161 .169	.086	.212 MAX	.043	.531	.100

PD300

	A	B	C	D	E	F
PD300	.450	.165	.560	1.04	.625	.980
PD300a	.630	.165	.560	1.04	.625	.980
PD300b	1.30	.230	.645	1.145		1.675

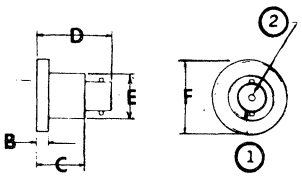

PD301

	A
PD301	.870
PD301a	.620
PD301b	1.30
PD301c	1.52
PD301d	1.72

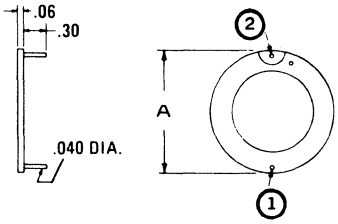

49. OUTLINE DRAWINGS

PD342

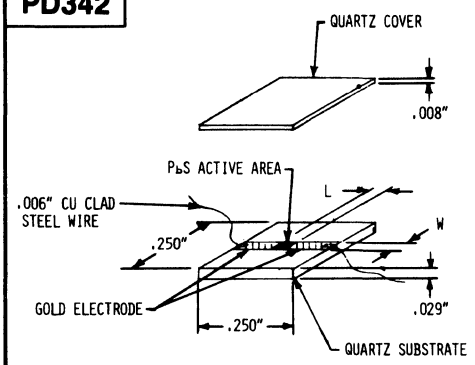

PD302

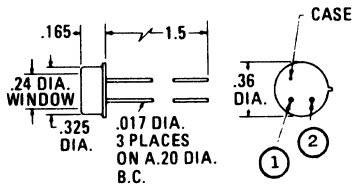

PD303

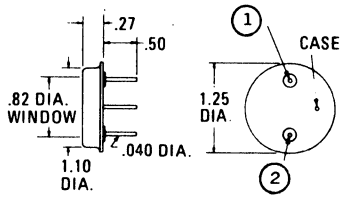

PD307

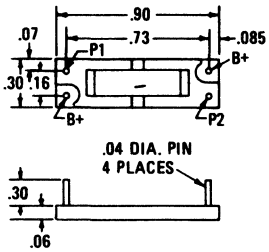

PD308

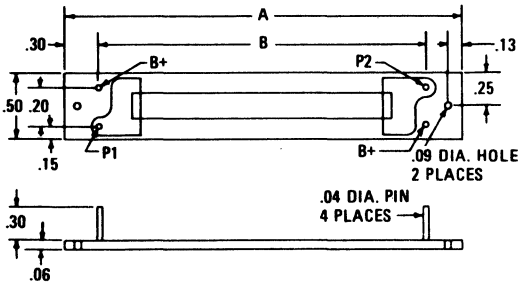

	A	B
PD308	2.70	2.10
PD308a	3.50	2.90

PD310

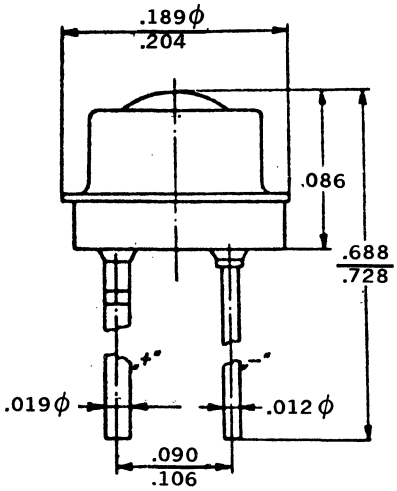

PD312

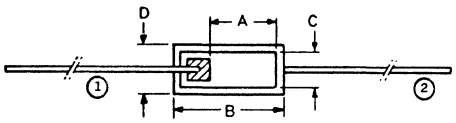

	A	B	C	D
PD312	.086 TYP	.125 / .137	.374 TYP	.043 / .055
PD312a	.137 TYP	.173 / .185	.070 TYP	.074 / .086

PD319

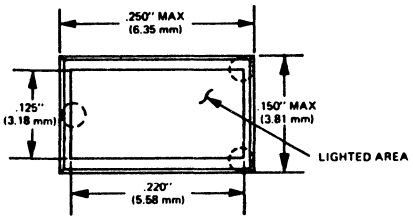

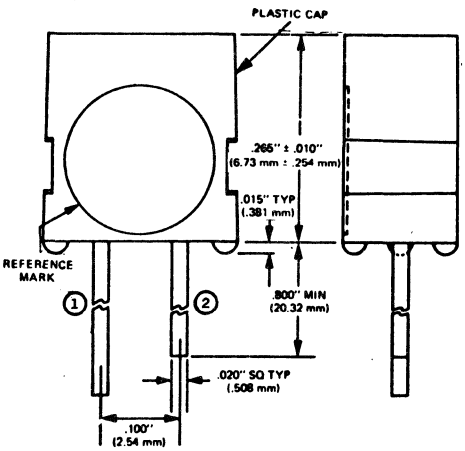

PD320

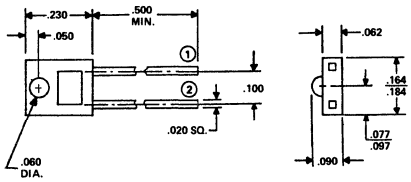

49. OUTLINE DRAWINGS

PD354

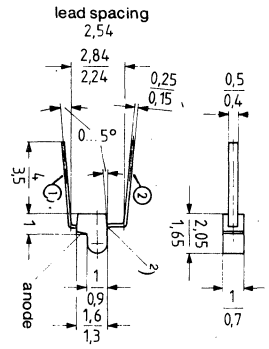

PD322

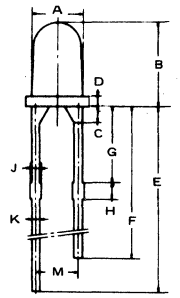

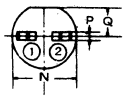

PD322

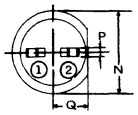

PD322a

	A	B	C	D	E	F	G	H	J	K	M	N	P	Q
PD322	2.80 3.20	4.80 5.20	1.50 MAX	.600	17.0 18.0	15.0 16.0	4.50	1.00	.800 MAX	.500	2.54	3.60 4.00	.500	1.70
PD322a	3.80 4.20	5.80 6.20	2.00 MAX	.800	17.0 18.0	15.0 16.0	4.50	1.00		.500	2.54	4.80 5.20	.500	2.10
PD322b	2.80 3.20	4.80 5.20		.600	14.0 16.0	13.5 NOM	4.20 4.80	1.00	.800 MAX	.400 .600	2.54			1.7
PD322c	2.8 3.2	4.8 5.2		.600	15.5 17.5	14.0 16.0	5.0 6.0	4.2 4.8	.800 MAX	.400 .600	2.54	3.65 3.95		1.7

PD323

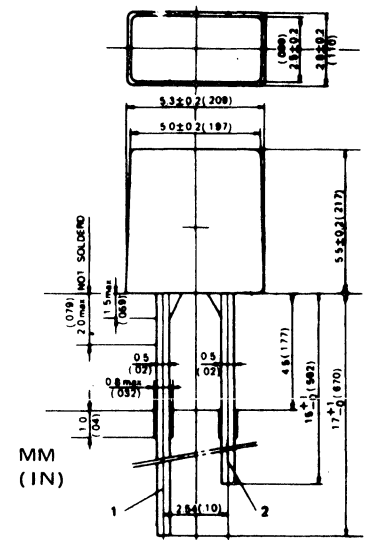

PD327

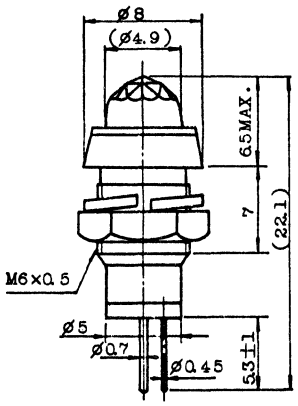

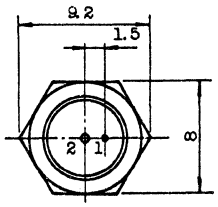

DIMENSIONS IN "MM"

PD328

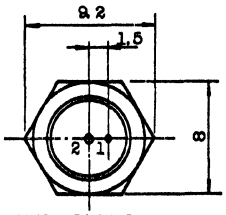

DIMENSIONS IN "MM"

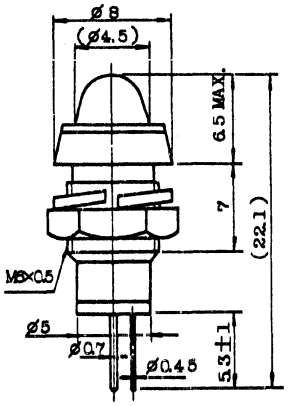

PD329

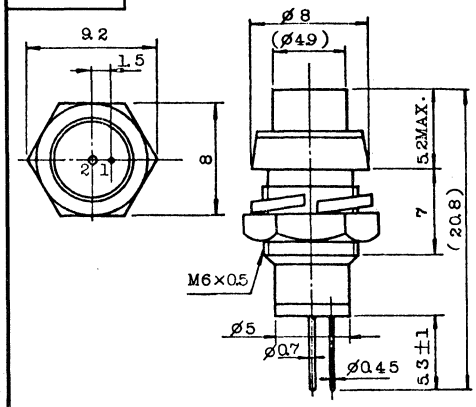

PD330

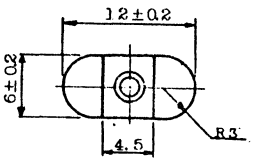

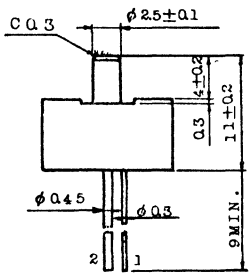

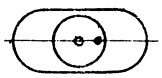

DIMENSIONS IN "MM"

49. OUTLINE DRAWINGS

PD331

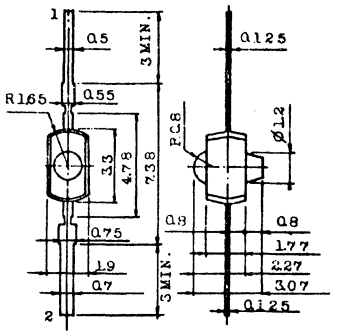

DIMENSIONS IN "MM"

PD332

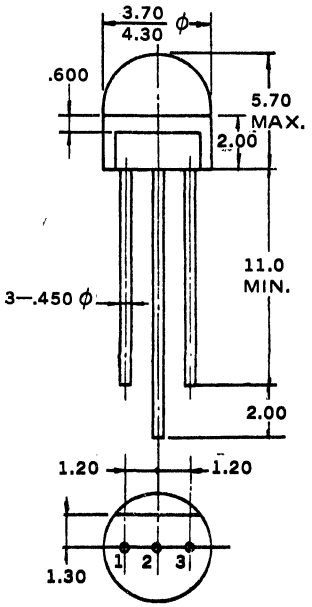

DIMENSIONS IN "MM"
PIN 1: RED ANODE
PIN 2: CATHODE
PIN 3: GREEN ANODE

PD333

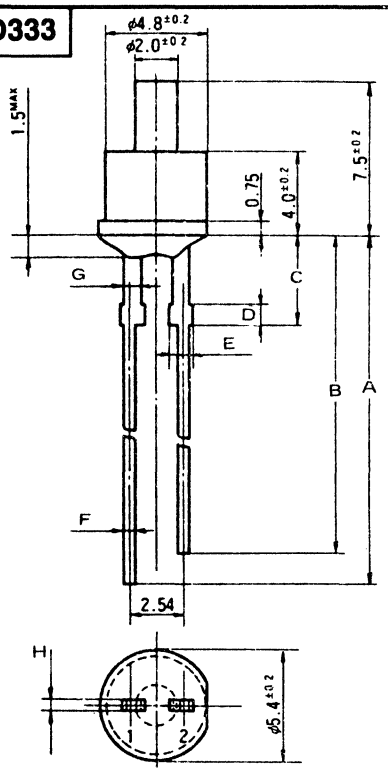

DIMENSIONS IN "MM"

	A	B	C	D	E	F	G	H
PD333	14.0 MIN	13.0 MIN	4.3	1.0	1.1 MAX	.50	1.0 MAX	.50
PD333a	23.0 MIN	21.5 MIN	6.9	1.6	1.0 MAX	.62	.76	.62

PD334

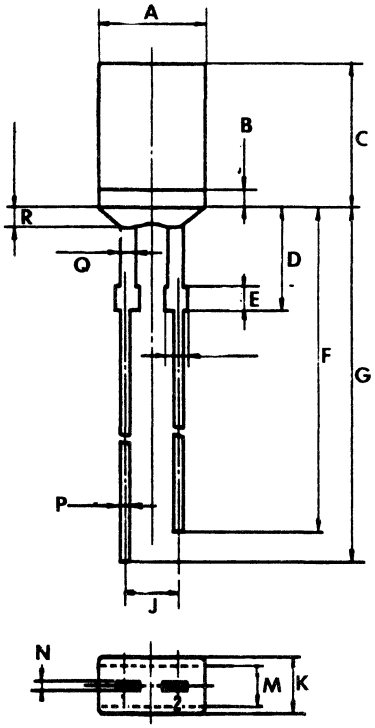

	A	B	C	D	E	F	G
PD334	.189 .205	.030	.268 .283	.165 .205	.039	.965 MIN	1.00 MIN
PD334a	.189 .205	.030	.268 .283	.165 .205	.039	.965 MIN	1.00 MIN

H	J	K	M	N	P	Q	R
.043 MAX	.100	.102 .118	.071 .087	.020	.020	.039 MAX	.059 MAX
.043 MAX	.100	.220 .236	.189 .205	.020	.020	.039 MAX	.059 MAX

PD335

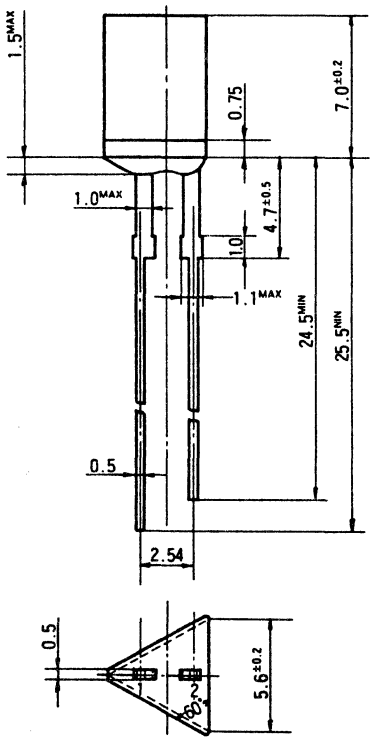

DIMENSIONS IN "MM"

PD337

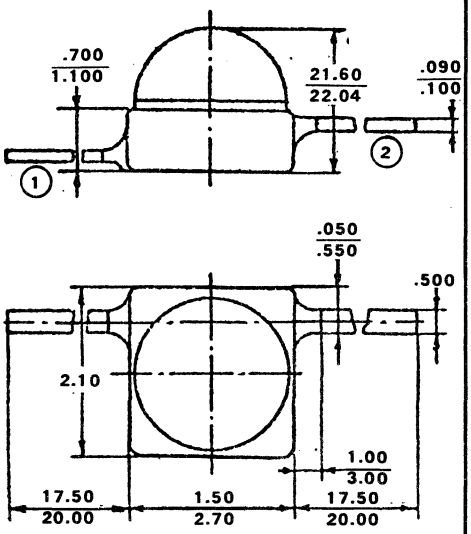

DIMENSIONS IN "MM"

49. OUTLINE DRAWINGS

PD356

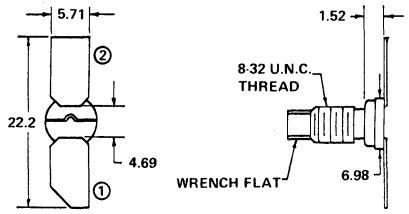

DIMENSIONS IN MM

PD357

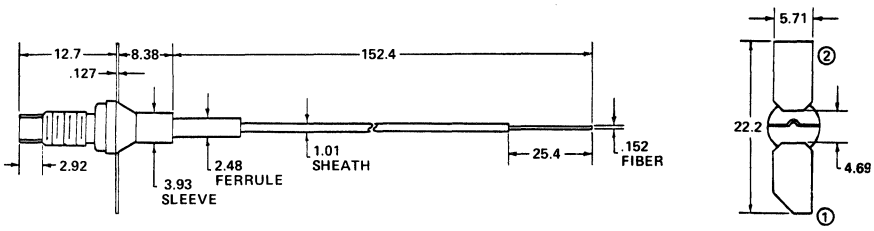

PD357: WITH 0.3 NA, 125 μm CORE, 150 μm O.D. STEP INDEX, ALL GLASS FIBER PIGTAIL

PD357a: WITH 0.27 NA, 65 μm CORE, 125 μm O.D. GRADED INDEX, GLASS FIBER PIGTAIL

DIMENSIONS IN MM

PD358

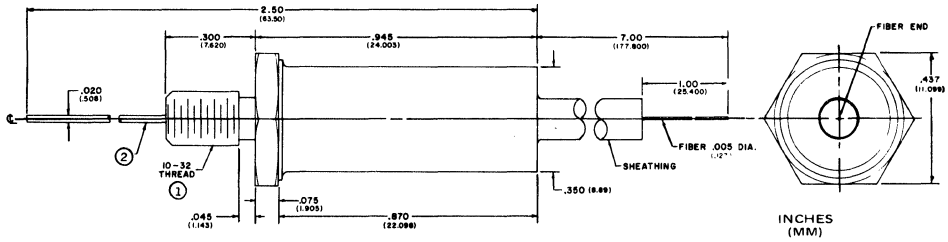

Fiber Pigtail Specs.

Type — Multimode-graded index-glass on glass
Fiber Diameter — 125 μm
Core Diameter — 65 μm
Numerical Aperture — .20
Attenuation @ 820 nm · 20 dB/Km

PD359

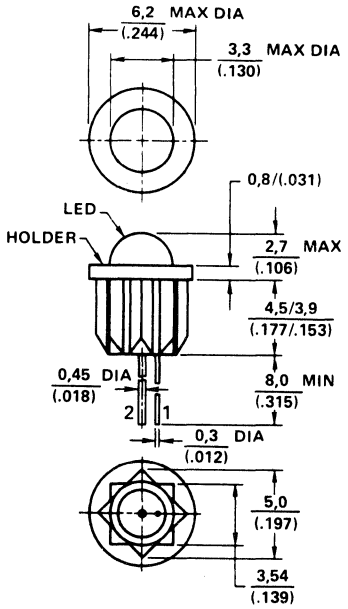

No. 1 Anode, No. 2 Cathode,

Dimensions: mm / Inches

PD360

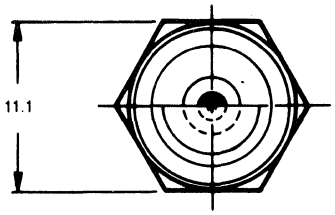

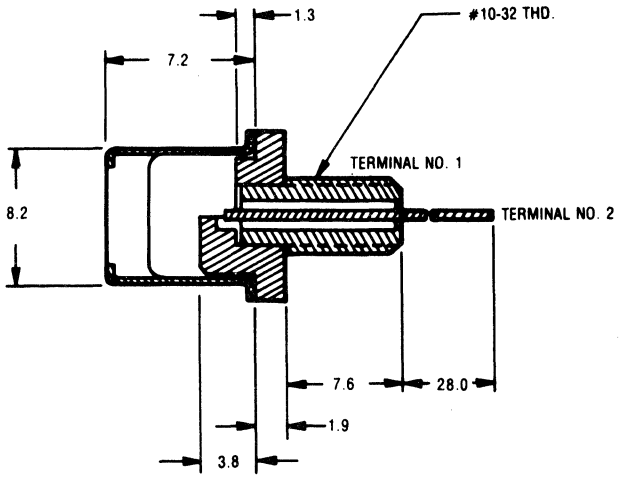

49. OUTLINE DRAWINGS

PD361

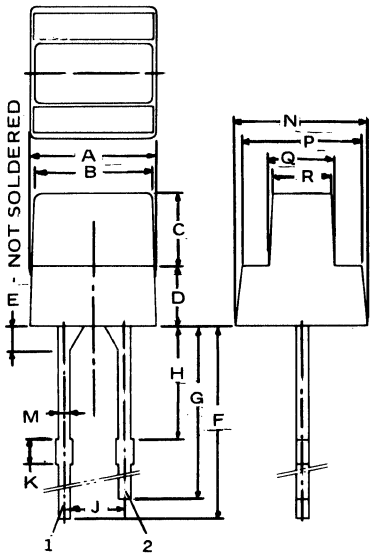

	A	B	C	D	E	F	G	H	J	K	M	N	P	Q	R
PD361	5.00 5.10	4.90 5.00	2.90 3.10	2.50	2.00 MAX	17.0 18.0	15.0 16.0	4.50	2.54	1.00	.500	5.40 5.60	4.90 5.10	2.65 2.85	2.52 2.62
PD361a	3.80 4.20	3.30 3.70	2.30 2.70	3.00	2.00 MAX	17.0 18.0	15.0 16.0	4.50	2.54	1.00	.500	3.80 4.20	3.40 3.80	2.10 2.50	1.60 2.00
PD361b	5.00 5.40	4.80 5.20	3.80 4.20	4.50	2.00 MAX	14.00 16.00	12.00 MIN	3.00 3.60	2.54	1.80	0.50 0.70	3.40 3.80	2.80 3.20	0.90 1.10	0.80 1.00
PD361c	5.00 5.40	4.80 5.20	5.30 5.70	4.50	2.00 MAX	14.00 MIN	12.00 MIN	2.80 3.40	2.54	1.80	0.50 0.70	3.30 3.70	3.10 3.50	3.10 3.50	2.80 3.20
PD361d	5.20	5.00	4.00	4.00	2.00 MAX	15.00 MIN	13.00 MIN	3.50 4.10	2.54	1.80	0.50 0.70			2.60	2.50
PD361e	5.30 5.70	5.10 5.50	5.80 6.20	2.00	2.00 MAX	15.50 MIN	13.50 MIN	4.80 5.40	2.54	1.80	0.50 0.70	3.80 4.20	3.80 4.20	1.80 2.20	1.60 2.00
PD361f	5.00 5.40	4.8 5.20	3.80 4.20	4.50	2.00 MAX	14.5 MIN	13.0 14.0		2.54	1.0	0.50 0.70	3.40 3.80	2.80 3.20	.90 1.10	.80 1.00
PD361g	5.7 5.9			3.5	2 MAX	15 TYP	14 15	3.81 4.39	2.54	1.0		3.8 4.2	2.8 3.2	0.9 1.1	0.8 1.0

PD362

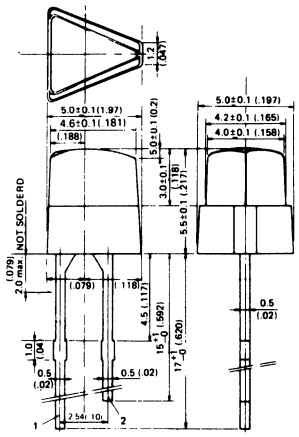

MM
(INCHES)

PD364

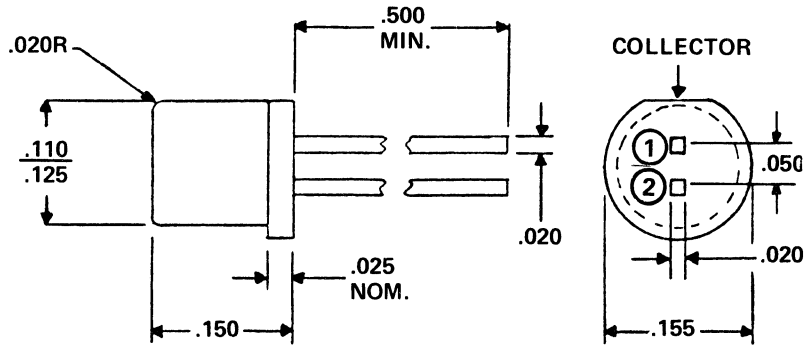

PD369

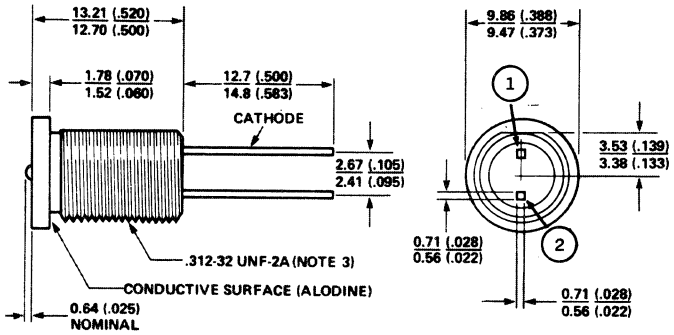

NOTES:

1. ALL EXTERNAL METAL SURFACES OF THE PACKAGE ARE BLACK ANODIZED EXCEPT FOR THE ALODINE AREA OF THE FLANGE AND THE GOLD PLATED LEADS.
2. MOUNTING HARDWARE WHICH INCLUDES ONE LOCK WASHER AND ONE HEX-NUT IS INCLUDED WITH EACH PANEL MOUNTABLE HERMETIC SOLID STATE LAMP.
3. USE OF METRIC DRILL SIZE 8.20 MILLIMETRES OR ENGLISH DRILL SIZE P (0.323 INCH) IS RECOMMENDED FOR PRODUCING HOLE IN THE PANEL FOR PANEL MOUNTING.
4. ALL DIMENSIONS ARE IN MILLIMETRES (INCHES).

49. OUTLINE DRAWINGS

PD371

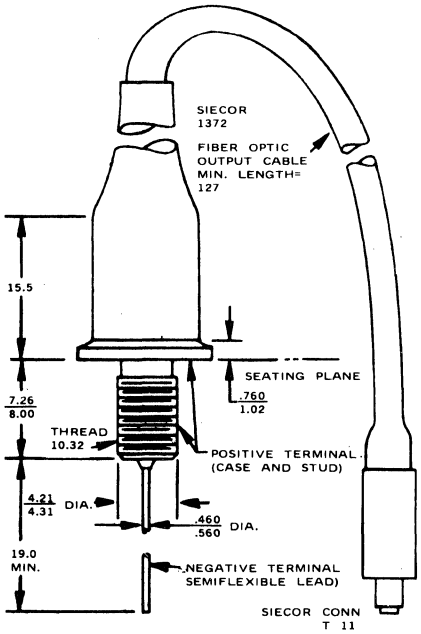

DIMENSIONS IN MM

PD625

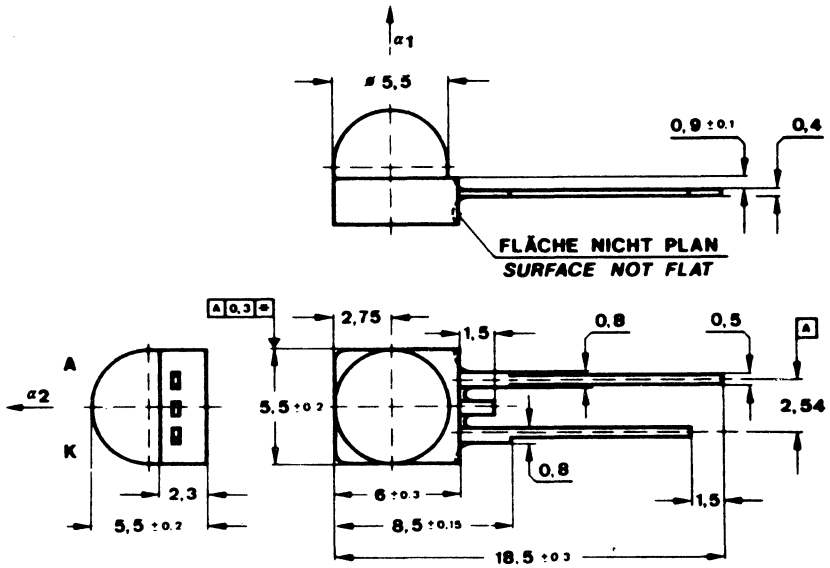

PD374

ALL LINEAR DIMENSIONS ARE IN INCHES AND PARENTHETICALLY IN MILLIMETERS.
INCH DIMENSIONS GOVERN.

	A
PD374	9,84(250)
PD374a	1,97(500)
PD374b	3,94(1000)

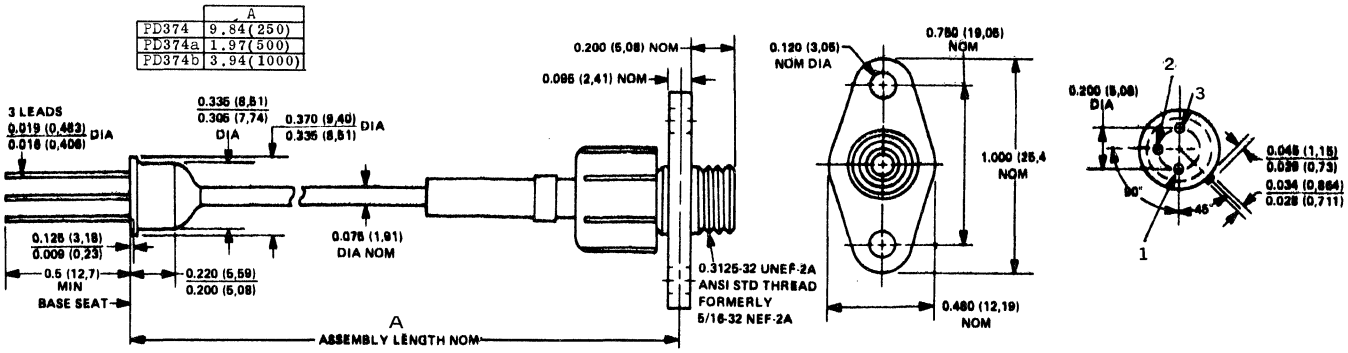

PD375

	A
PD375	9,84(250)
PD375a	1,97(500)
PD375b	3,94(1000)

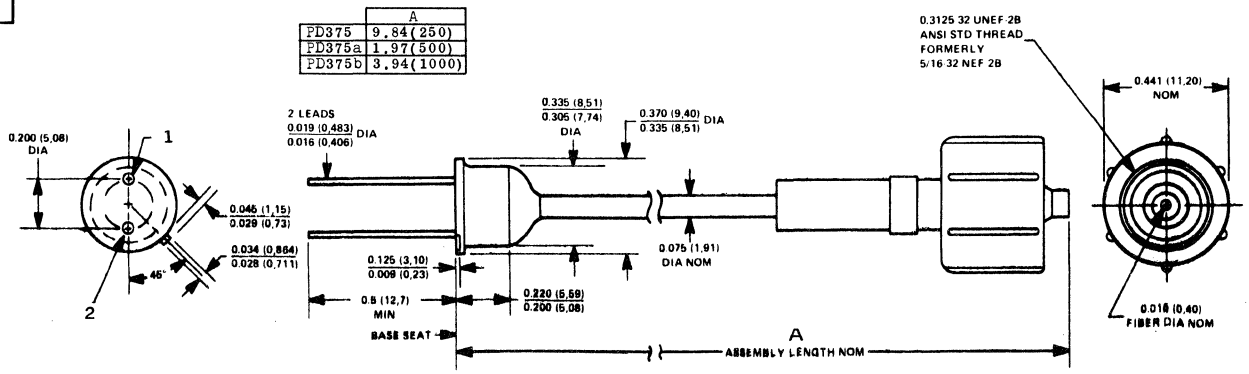

ALL LINEAR DIMENSIONS ARE IN INCHES AND PARENTHETICALLY IN MILLIMETERS. INCH DIMENSIONS GOVERN.

49. OUTLINE DRAWINGS

PD377

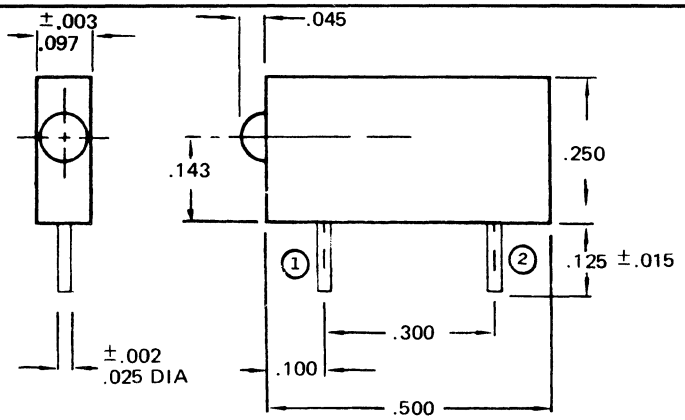

● DECIMALS ±.010

PD379

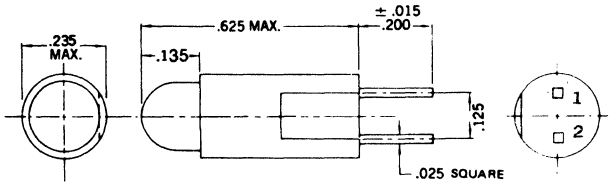

PD380

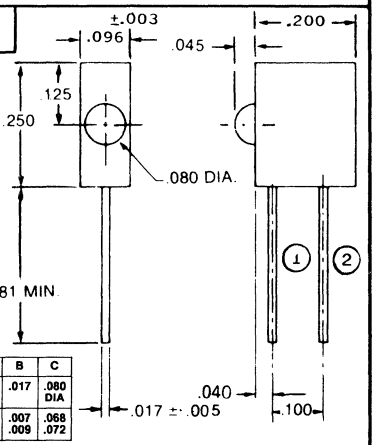

	A	B	C
PD380	.281 MIN	.017	.080 DIA
PD380a	.135 MIN	.007 .009	.068 .072

PD381

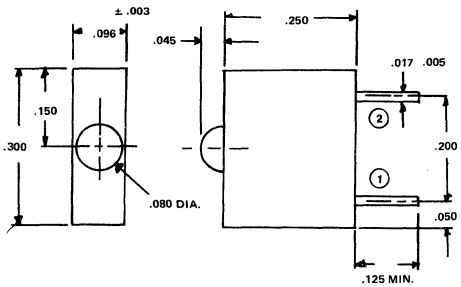

PD382

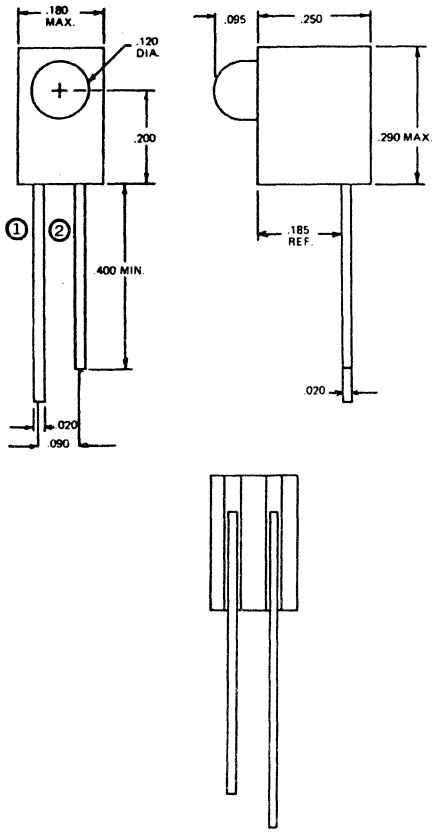

PD383

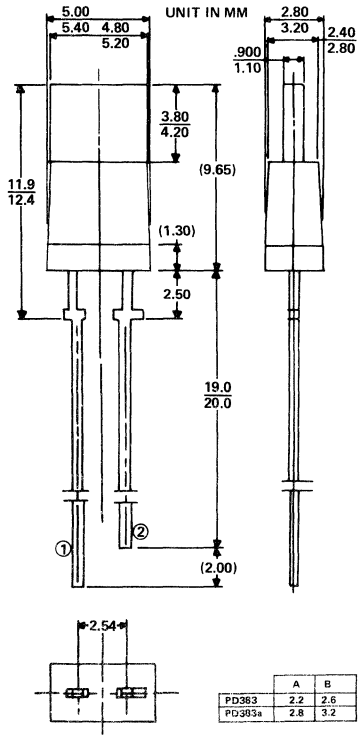

	A	B
PD383	2.2	2.6
PD383a	2.8	3.2

49. OUTLINE DRAWINGS

PD386

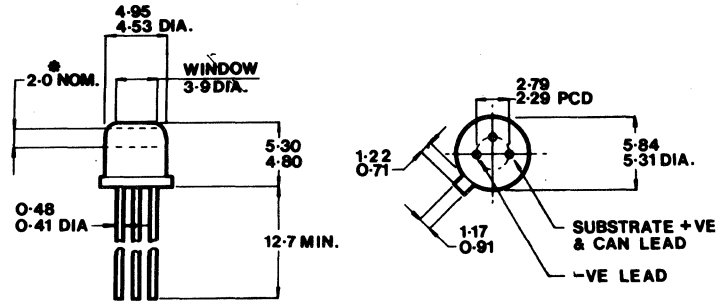

(SUFFIX)	DIODE OPTION
-R	Electrically Isolated from the Can
-2	Centraly Mounted to A Tolerance ±0,25mm on the Header
-R2	Electricaly Isolated and Centraly Mounted

(all dimensions in mm) Dimension* refers to distance between window and active area.

PD392

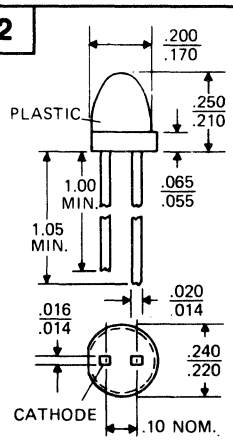

PD393

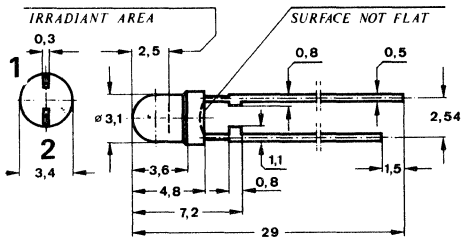

DIMENSIONS IN "MM"

PD394

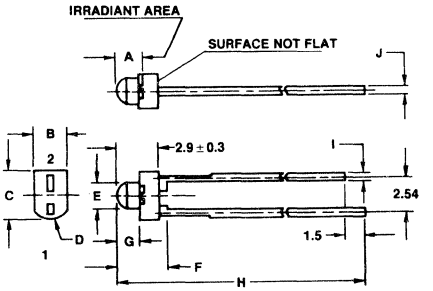

Dimensions in mm

	A	B	C	D	E	F	G	H	I	J
PD394	1.9	2.5	3.4	R1.6	1.9	3.6	1.65	29	0.5	0.3
PD394a	1.9	2.3 2.5	3.2 3.4	R1.65	1.7 1.9	3.1 3.5	1.54 1.56	29.2 30.2	0.4 0.6	0.3 0.5

PD395

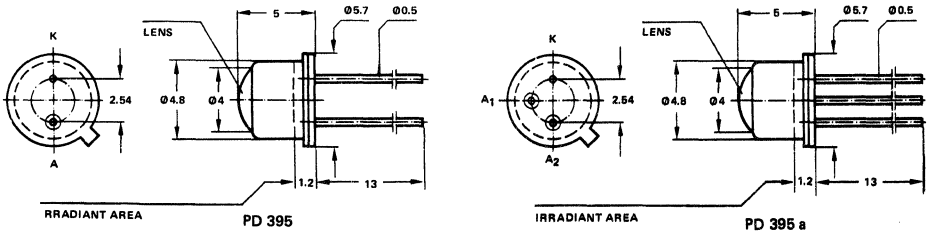

DIMENISONS IN "MM"

PD398

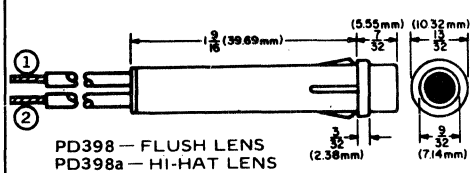

PD398 — FLUSH LENS
PD398a — HI-HAT LENS

Suffix	A	B	C	D	E	LENS
PD398	1.56	.220	.410	.090	.280	FLUSH
PD398a	1.56	.220	.410	.090	.280	HI-HAT
PD398b	1.606	.330	.405	.090	.306	HI-HAT
PD398c	1.606	.100	.405	.090	.306	FLUSH
PD398d	1.169	.330	.405	.090	.290	HI-HAT
PD398e	1.169	.100	.405	.090	.290	FLUSH
PD398f	.990	.322	.370	.147	.311	HI-HAT
PD398g	1.065	.240	.630	.090	.425	HI-HAT
PD398h	1.065	.121	.630	.090	.425	FLUSH

PD399

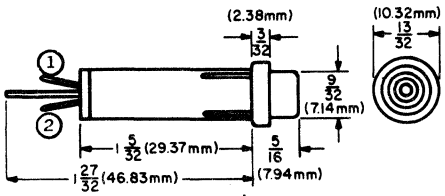

PD399 AND PD399b — FLUSH LENS
PD399a AND PD399c — HI-HAT LENS

PD399b,c

SAME AS PD399 AND PD399a EXCEPT WITH MALE PIN TERMINALS .040" (1.0mm) DIAMETER WITH 5/32" (3.96mm) SPACING. .020" (.50mm) OFF CENTER — SEE CUTAWAY DRAWING.

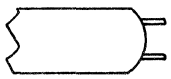

PD400

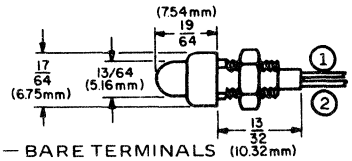

PD400 — BARE TERMINALS
PD400a — INSULATED WIRE

49. OUTLINE DRAWINGS

PD405

Ref.	Inches Min.	Inches Max.	Millimeters Min.	Millimeters Max.
A	.178	.188	4.52	4.78
B	.195	.205	4.96	5.21
C	.075	.080	1.91	2.03
D	.075	.080	1.91	2.03
E	.5 Nominal		12.8 Nominal	
F	.016	.019	.41	.48
H	.035	.045	.89	1.15
J	.033	.048	.84	1.22
K	.096	.104	2.43	2.65
L	.105	.115	2.68	2.92
M	.202	.213	5.12	5.41

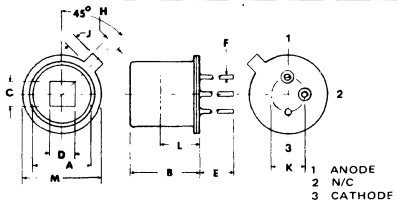

PD411

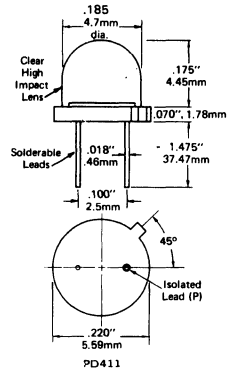

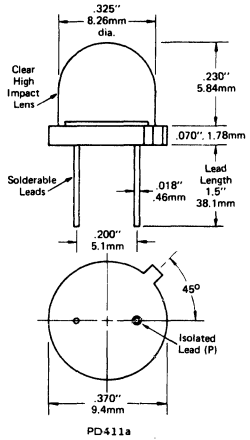

PD412

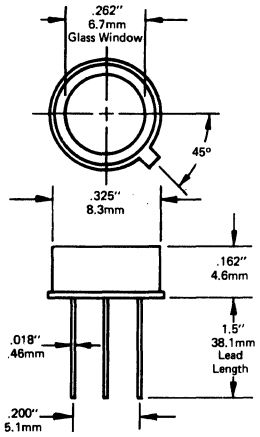

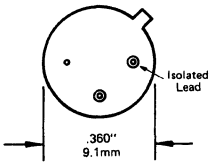

Dual Element
PD412

Base Diagram

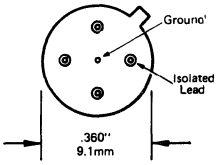

Quad Element
PD412a

PD413

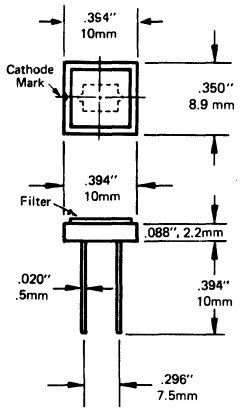

PD413

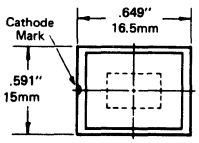

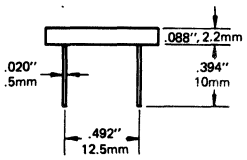

PD413a

PD417

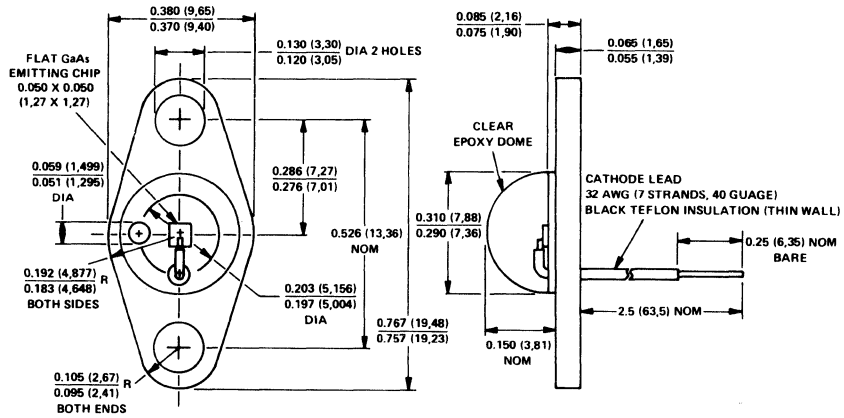

ALL DIMENSIONS ARE IN INCHES AND PARENTHETICALLY IN MILLIMETERS INCH DIMENSIONS GIVEN

49. OUTLINE DRAWINGS

PD418

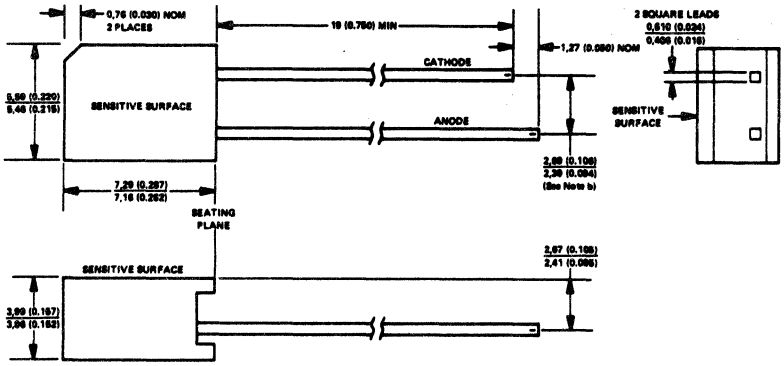

NOTES: a. All dimensions are in millimeters and parenthetically in inches.
b. Lead spacing is measured at the seating plane.

PD420

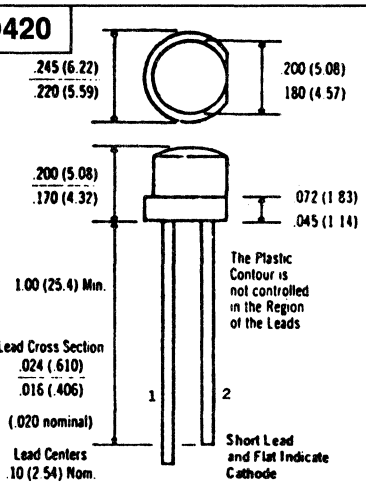

Dimensions are in inches (mm).

PD422

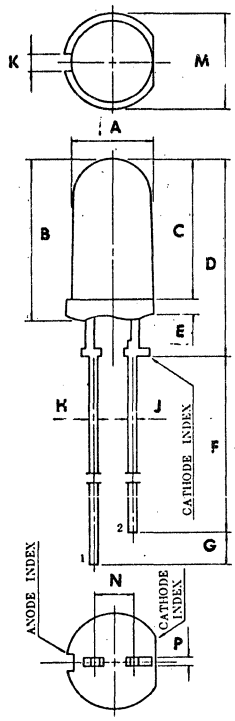

	A	B	C	D	E	F	G	H	J	K	M	N	P
PD422	4.80	11.0	8.45	12.05	1.00	16.5	2.00	.500	.500	1.00	5.60	2.54	.500
	5.20	MAX	8.65	12.55		18.5					6.00		
PD422a	4.80	10.0	7.45	11.05	1.00	16.5	2.00	.500	.500	1.00	5.60	2.54	.500
	5.20	MAX	7.85	11.55		18.5					6.00		

DIMENSIONS IN "MM"

PD424

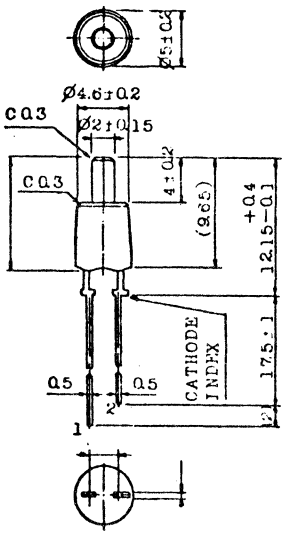

1. ANODE
2. CATHODE

PD425

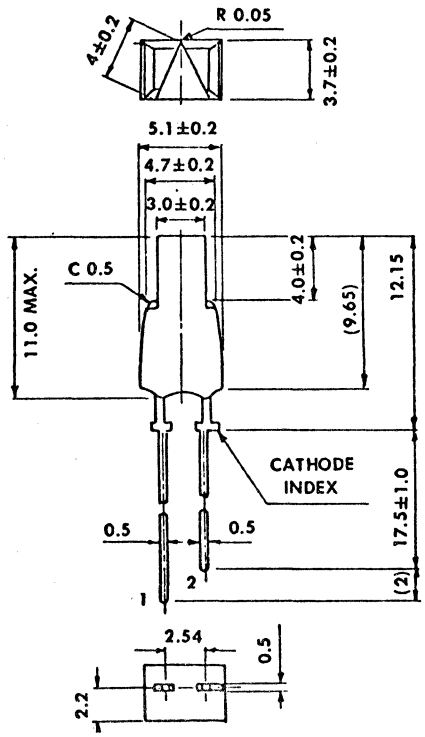

49. OUTLINE DRAWINGS

PD426

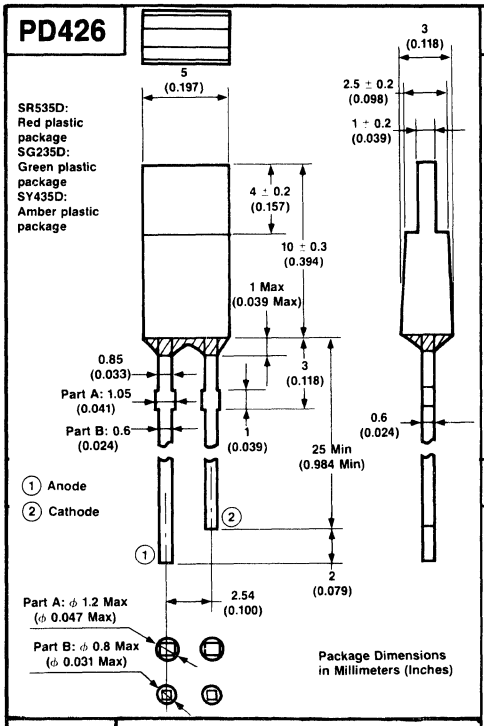

PD927

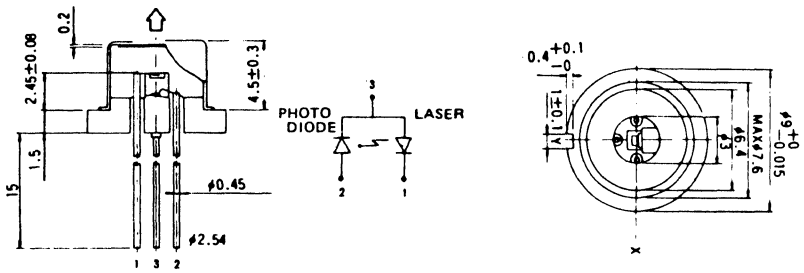

PD431

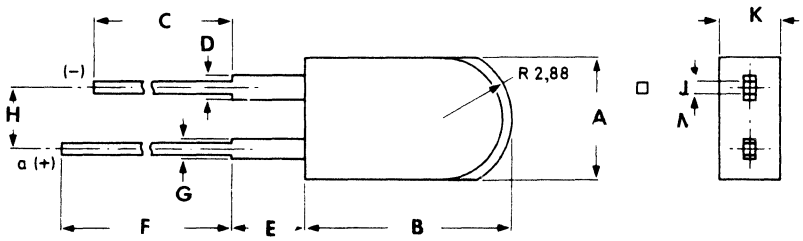

	A	B	C	D	E	F	G	H	J	K
PD431	5.08 MAX	8.50 9.50	12.70 MIN	1.00	2.50 3.50	14.00 MIN	0.80	2.54	0.43 0.58	2.54 MAX
PD431a	5.00 4.80	8.30 8.80	12.10 12.50	1.00 0.70	3.60	13.60 14.00	1.00 1.30	2.54	0.50 0.65	2.50 2.30
PD431b	5.10 MAX	8.60 8.40	12.10 12.50		3.00	13.60 14.00		2.54	0.5 NOM	2.40 2.60

PD427

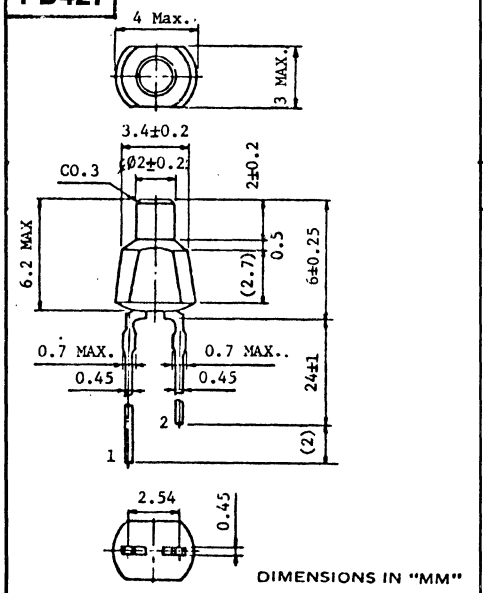

PD372

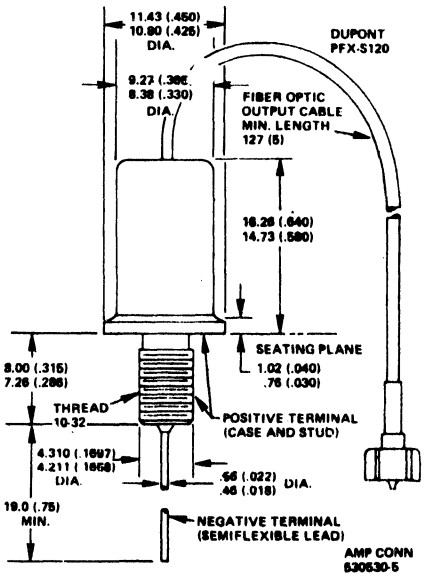

PD433

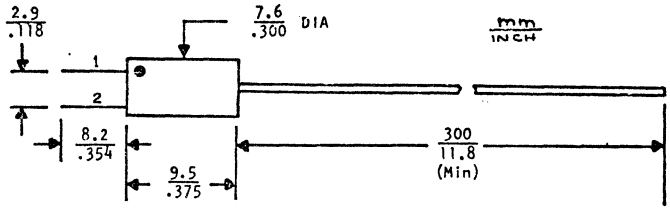

49. OUTLINE DRAWINGS

PD436

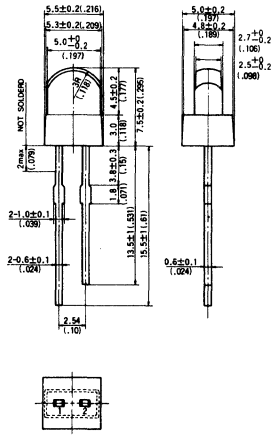

MM
(INCH)

PD438

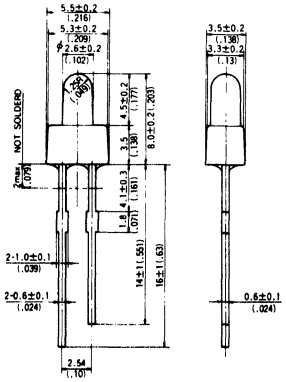

MM
(INCH)

PD439

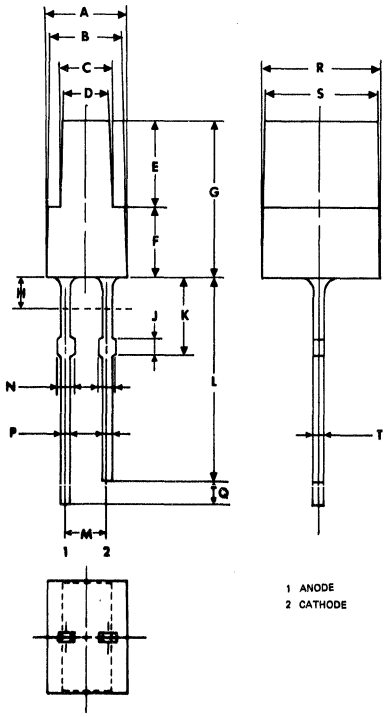

	A	B	C	D	E	F	G	H	J	K	L	M	N	P	Q	R	S	T
PD439	.181 .197	.173 .189	.075 .090	.071 .087	.169 .185	.138	.307 .323	.079 MAX	.071	.232	.530 .573	.100 MIN	.035 .043	.020 .028		.091 .098	.110 .126	.020 .028
PD439a	.189 .205	.181 .197	.118 .134	.110 .126	.209 .224	.177	.386 .402	.079 MAX	.039	.181 .205	.472 .551	.100	.039 .043	.020 .028	.059	.226 .291	.268 .283	.020 .028

PD445

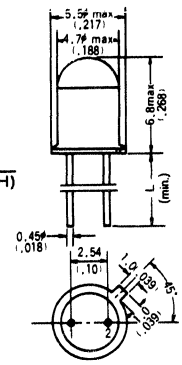

MM
(INCH)

PD446

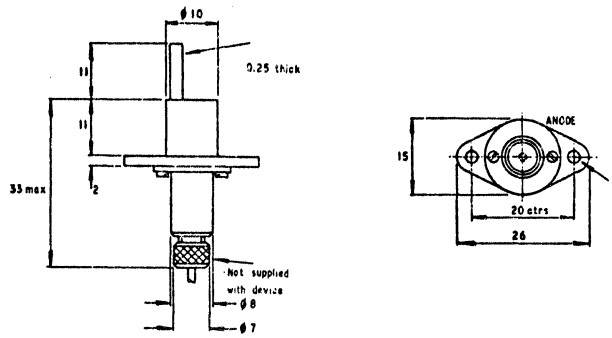

49. OUTLINE DRAWINGS

PD447

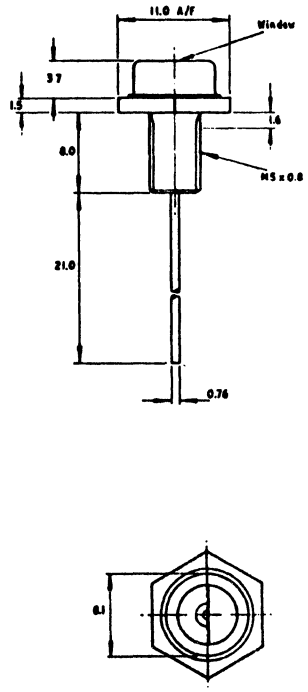

PD451

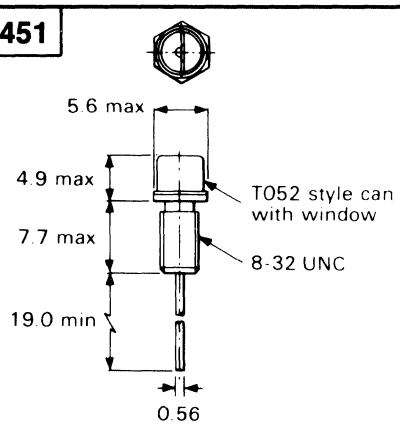

DIMENSIONS IN "MM" SCALE 1:1

PD452

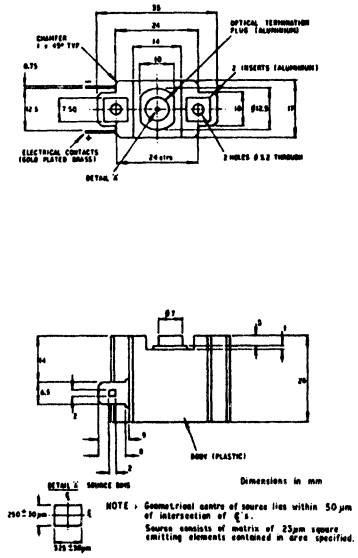

PD455

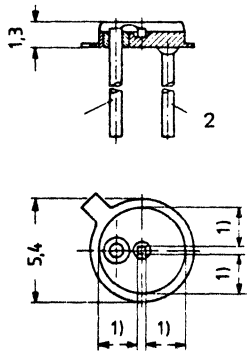

'DIMENSIONS IN "MM"

PD457

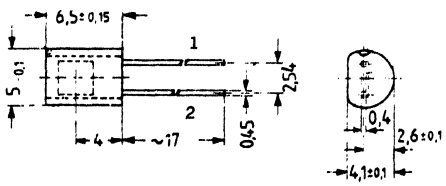

DIMENSIONS IN "MM"

PD458

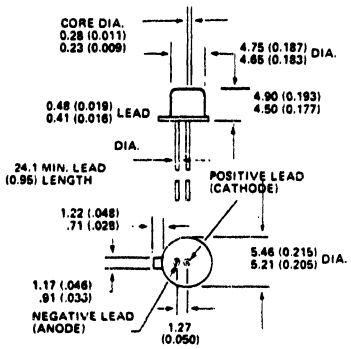

PD459

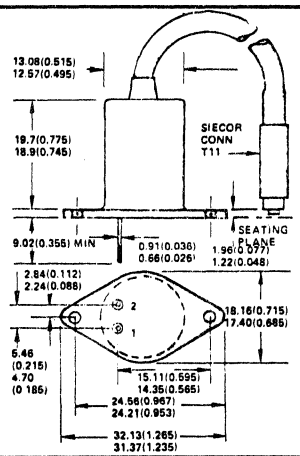

MM
(INCH)

PD461

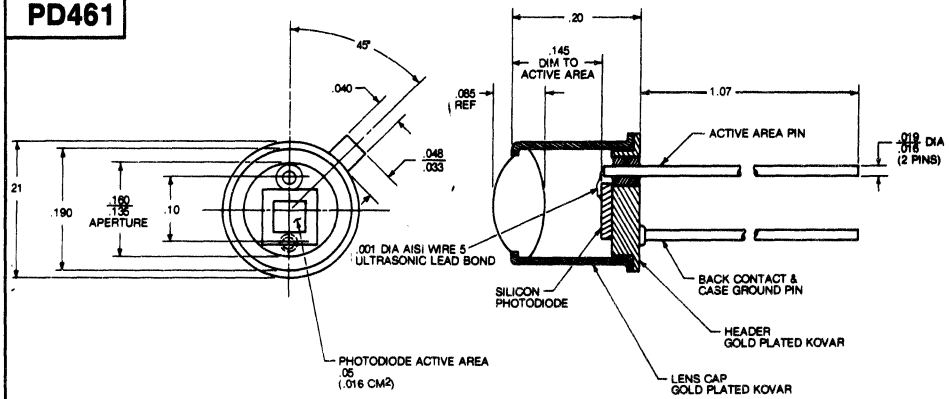

49. OUTLINE DRAWINGS

PD462

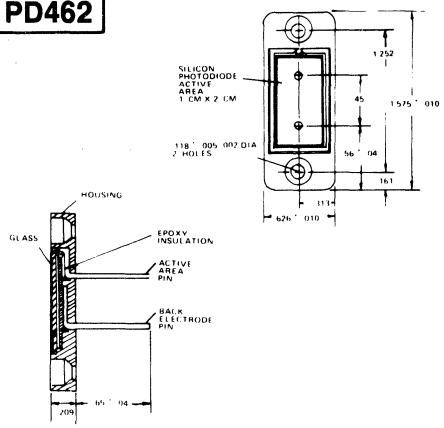

PD463

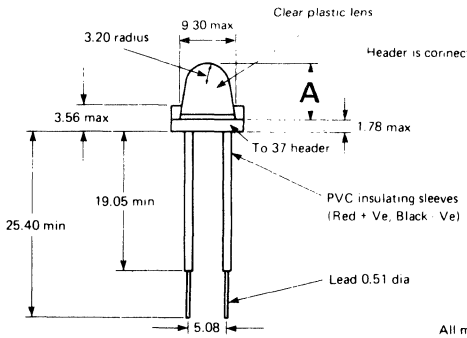

	A
PD463	7.84
PD463a	6.88
PD463b	3.30

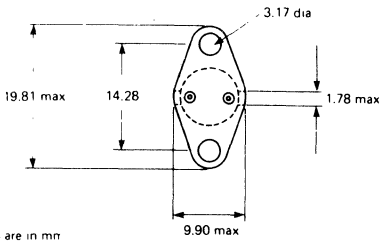

PD624

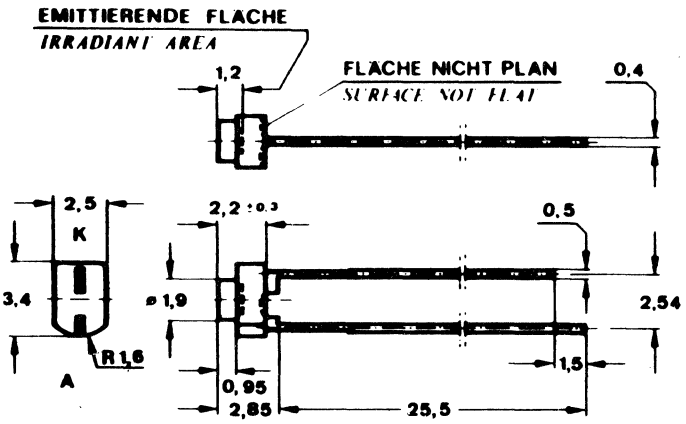

PD467

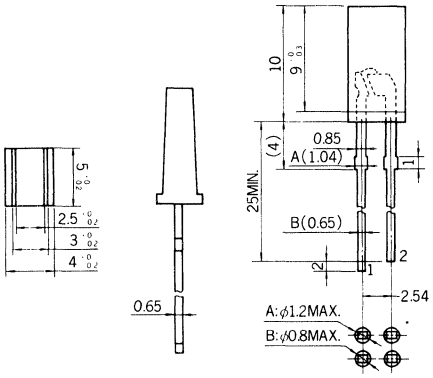

PD468

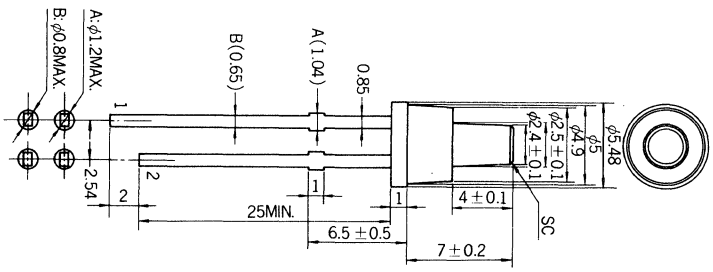

PD469

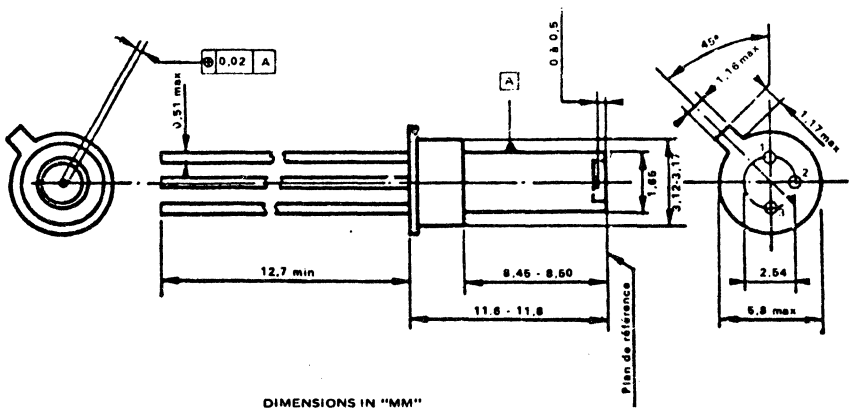

DIMENSIONS IN "MM"

49. OUTLINE DRAWINGS

PD470

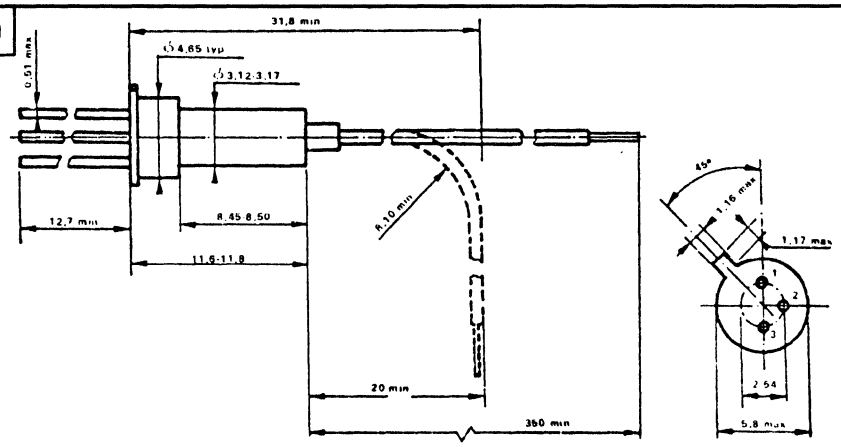

PD471

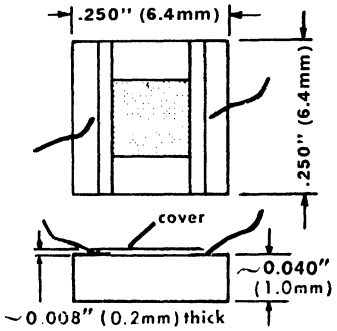

PD473

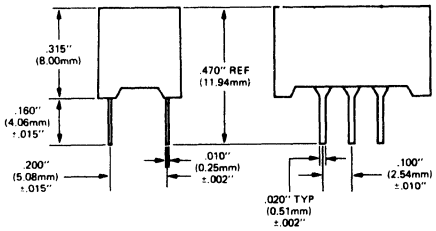

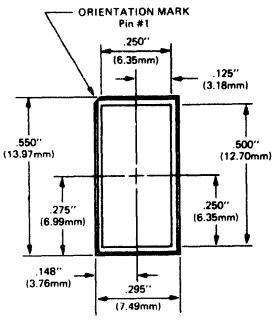

PIN NO.	ELECTRICAL CONNECTIONS
1	Cathode 1
2	No Pin
3	Anode 2
4	Cathode 2
5	NC
6	Anode 1

TOLERANCE ±.010" UNLESS SPECIFIED.

PD558

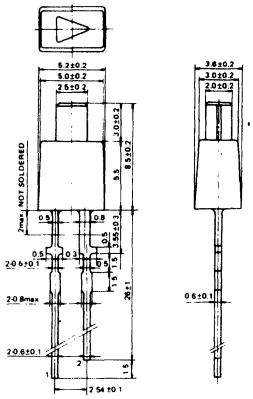

PD474

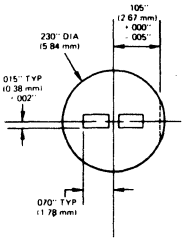

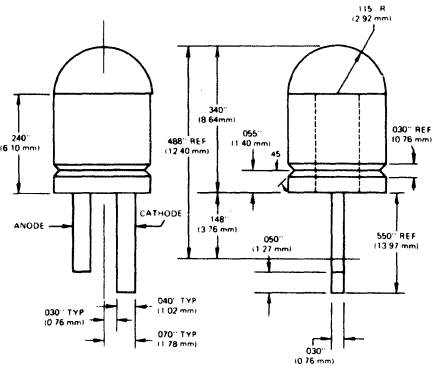

PD478

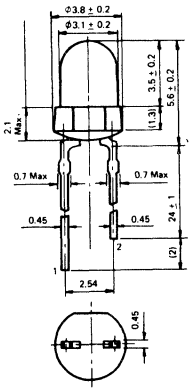

No. 1 Anode, No.2 Cathode, Dimensions: mm

PD479

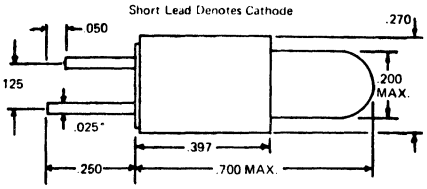

• Terminal cross-section may vary.

• DECIMALS ± .015

49. OUTLINE DRAWINGS

PD484

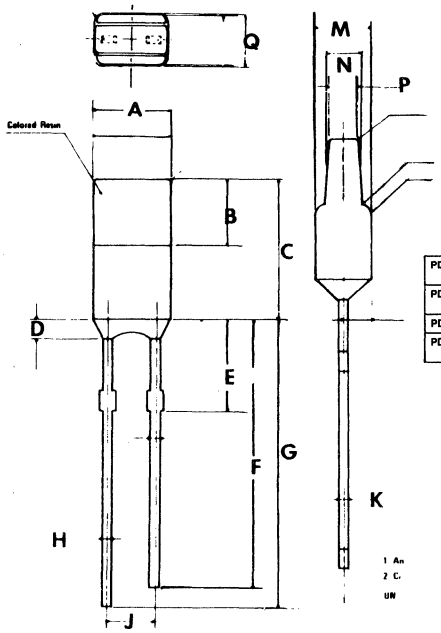

	A	B	C	D	E	F	G	H	J	K	M	N	P	Q
PD484	.150 .157	.126 .135	.264 .276	.059 MAX	.161 .200	.531 MIN	.571 MIN	.031 MAX	.100 NOM	.018 NOM	.102 .118	.061 .077	.051 .059	.102 .118
PD484a	.197	.238 .254	.051 .065	.039 MAX	.138 NOM	1.000 MAX	1.110 MAX	.031 MAX	.100		.110	.075 .091	.071 .087	.110
PD484b	.197	.246	.276		.311	.934	.984	.026	.100	.026	.108	.079	.075	.108
PD484c	.189 .197	.346 .362	.039	.059 MAX	.138 .177	.886 MIN	.925 MIN	.039 MAX	.100	.020	.150 .165	.112 .124	.093 .104	.150 .165

PD487

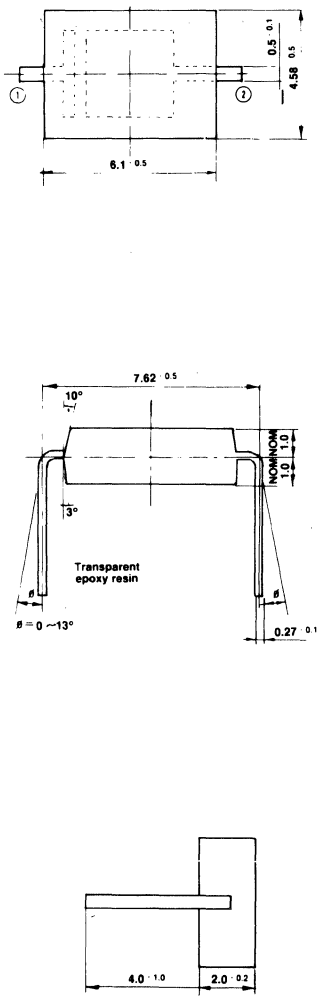

PD489

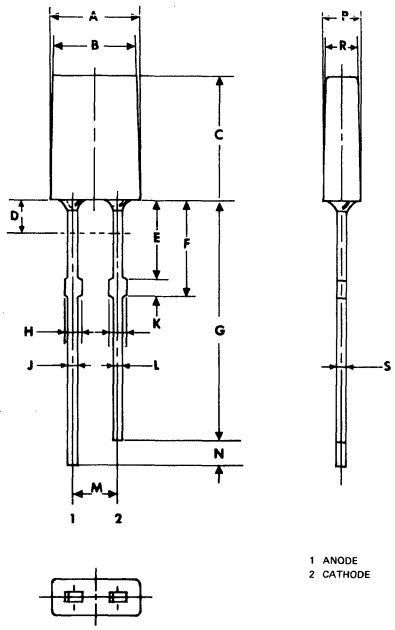

	A	B	C	D	E	F	G	H	J	K	L	M	N	P	R	S
PD489	.146 .157	.142 .154	.276			.150 .189	.520 MIN		.012 .028		.031 MAX	.094 TYP	1.0 MIN			
PD489a	.197 .213	.189 .205	.287 .303	.079 MAX	1.87	.215 .238	.531 .610	.035 .043	.020 .028	.035 .043	.020 .028	.100	.059	.079 .094	.071 .087	.020 .028
PD489b	.150 .165		.189 .205	.079 MAX	.138	.165 .189	.531 .610	.031 MAX	.016 .024	.031 MAX	.016 .024	.100	.059	.071 .087		.016 .024
PD489c	.197	.197	.295				.630 MIN	.024	.024		.024	.098	.079	.079	.079	.024
PD489d	.150 .165	.146 .157	.138 .154			.173 .197	.528 .591	.020 .035	.012 .028		.012 .028	.091 .106	.059 TYP	.047 .063	.043 .059	.012 .028

PD559

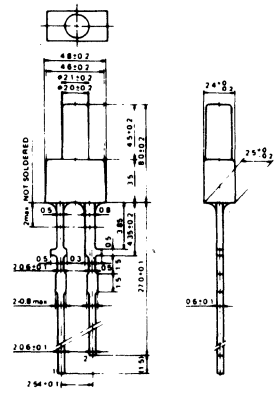

49. OUTLINE DRAWINGS

PD490

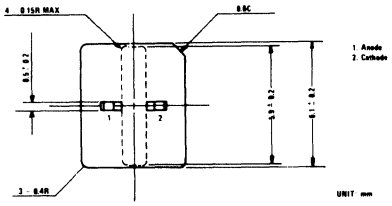

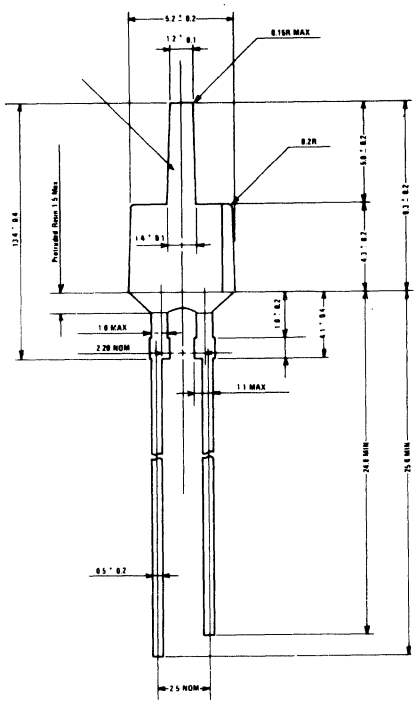

	A	B
PD490	25.00	24.00
PD490a	23.00	21.50
PD490b	28.00	26.50

PD493

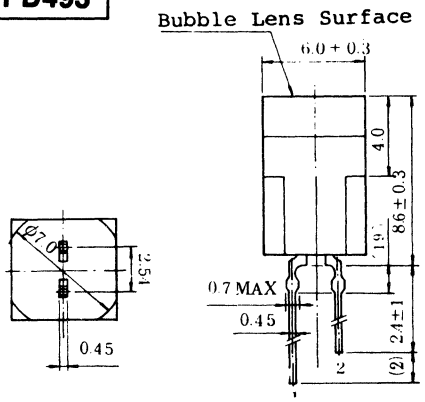

PD494

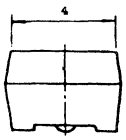

Tolerance is
±0.25
Unless Otherwise
Noted.

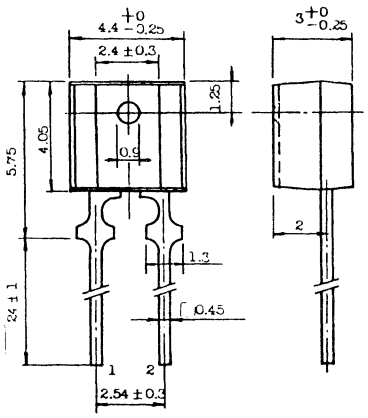

PD495

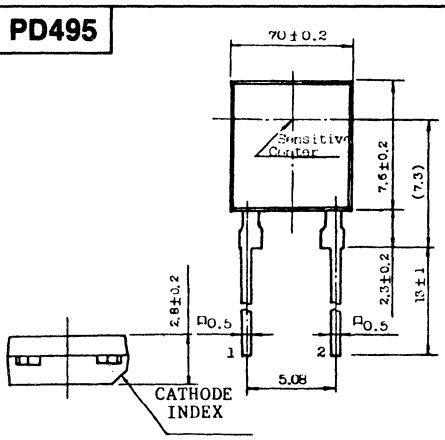

PD497

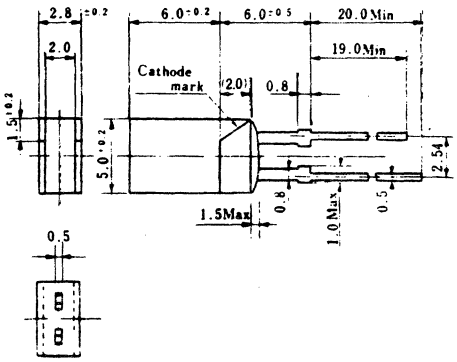

PD498

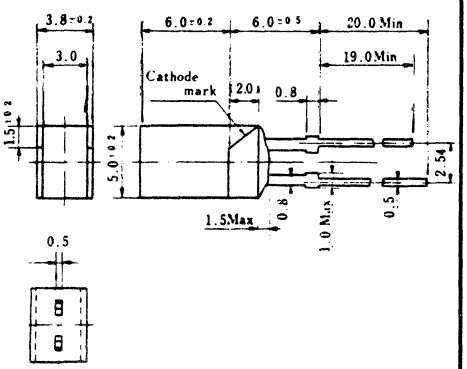

49. OUTLINE DRAWINGS

PD500

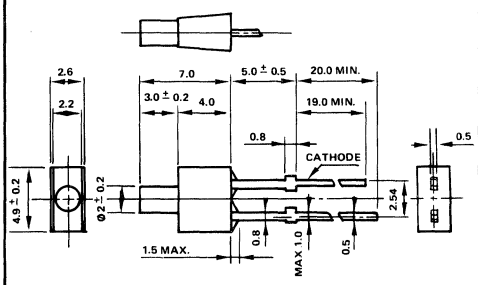

PD501

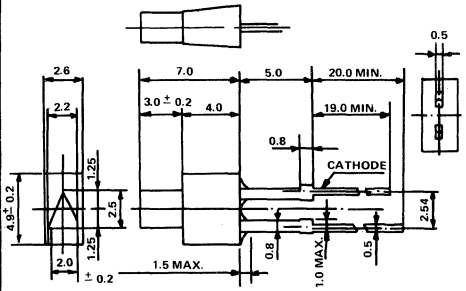

PD502

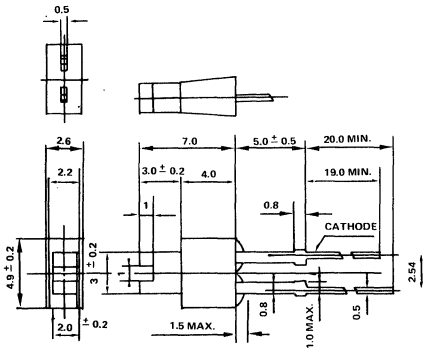

PD503

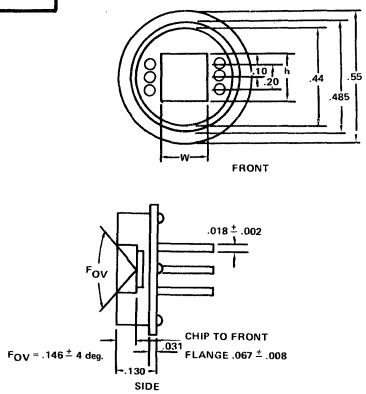

PD504

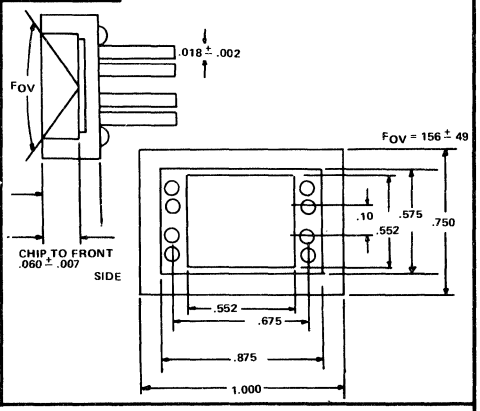

PD613

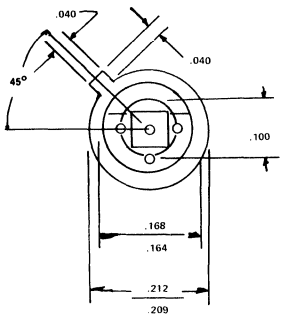

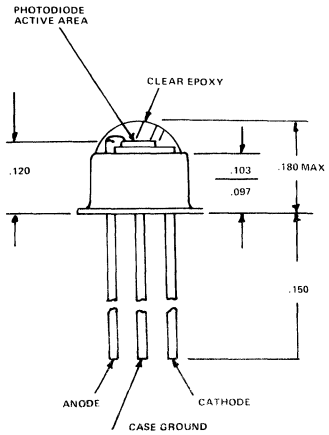

PD507

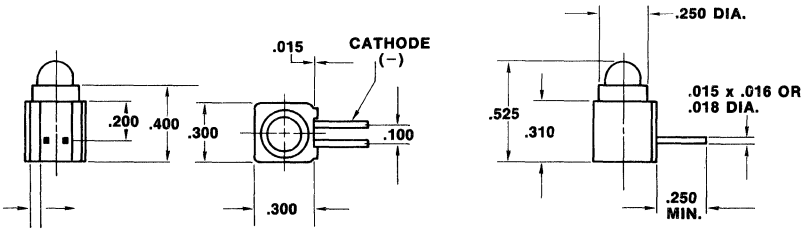

PD511

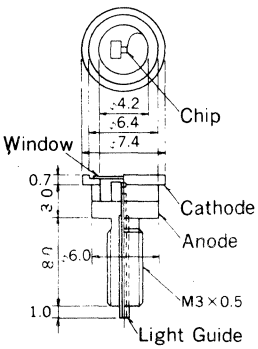

PD513

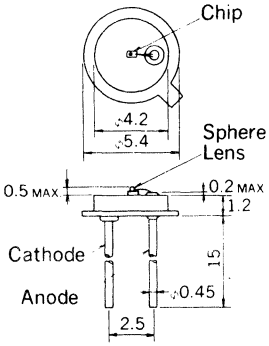

49. OUTLINE DRAWINGS

PD515

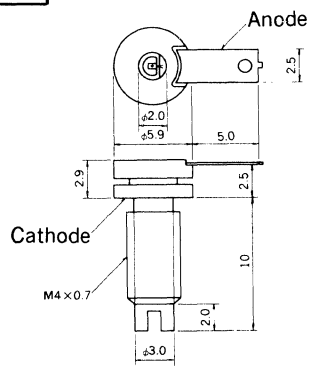

PD517

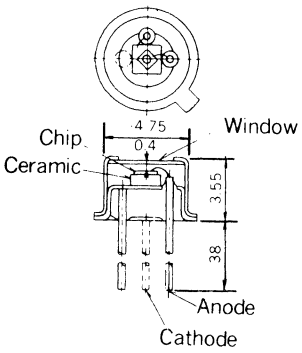

PD520

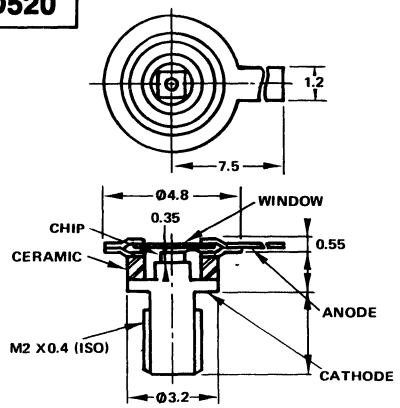

PD525

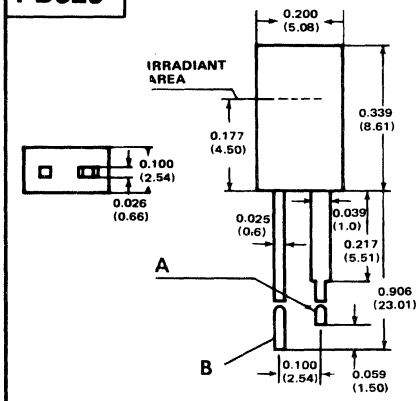

PD526

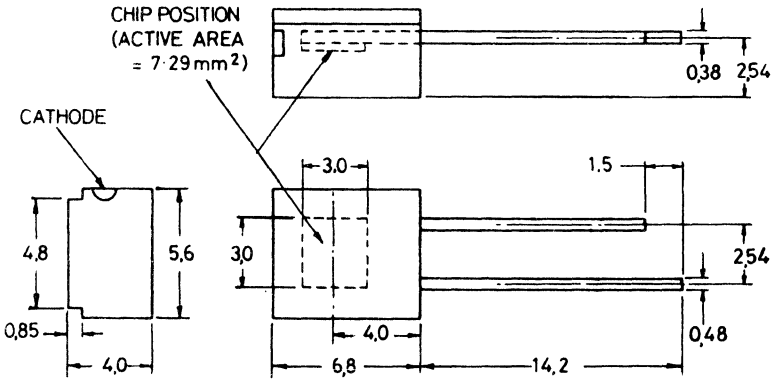

PD530

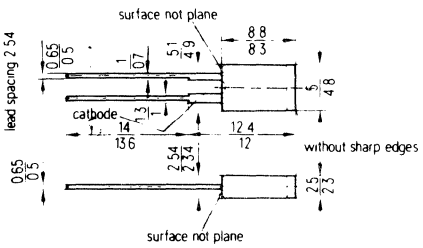

PD557

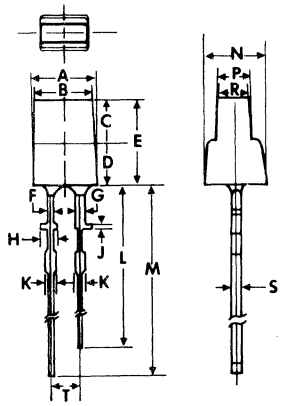

	A	B	C	D	E	F	G	H	J	K	L	M	N	P	R	S	T
PD557	.197 .213	.189 .205	.130 .145	.138	.268 .283	.020	.031	.020	.020	.031	1.02 1.10	1.12 TYP	.165 .181	.110 .126	.071 .087	.019 .028	.096 .104
PD557a	.197 .213	.189 .205	.209 .224	.178	.386 .402	.020	.031	.020	.020	.031	.984 1.06	1.08 TYP	.150 .165	.079 .094	.071 .087	.019 .028	.100
PD557b	.197 .213	.189 .205	.236 .254	.108	.346 .362	.024	.031		.020	.031	1.00 1.08	1.10 TYP	.259 .276	.197 .213	.189 .205	.019 .028	.100
PD557c	.220 .236	.219 .230	.256	.138	.386 .402	.024	.031		.020	.031 MAX	1.00 1.08	1.10 TYP	.165 .181	.106 .122	.100 .112	.019 .028	.100

PD535

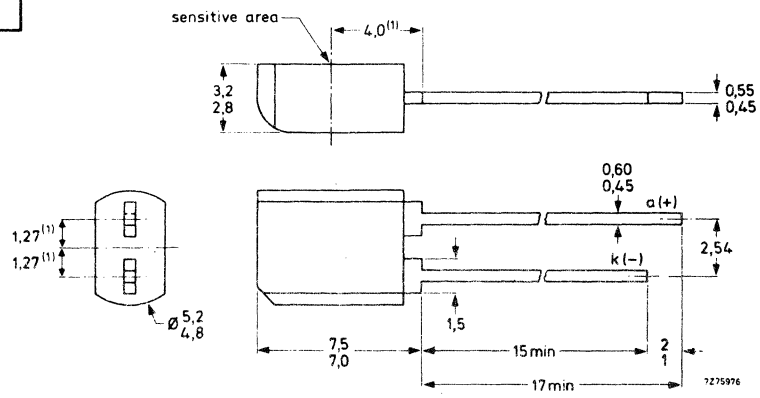

49. OUTLINE DRAWINGS

PD540

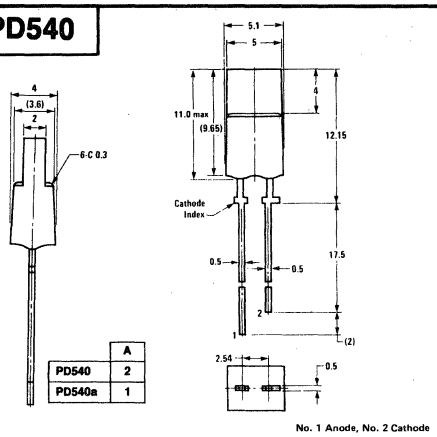

	A
PD540	2
PD540a	1

PD542

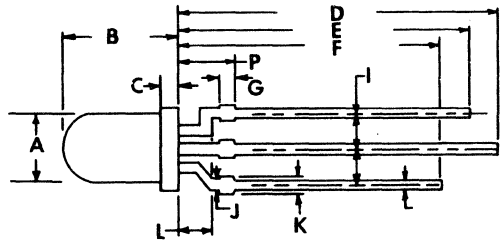

	A	B	C	D	E	F	G	H	I	J	K	L	M	N	P
PD542	.183 .191	.327 .343	.047	.964 MIN	.885 MIN	.807 MIN	.040	.020	.100	.031	.040 MAX	.098	.226 .234	.020	.165 TYP
PD542a	.191 .201	.33 .35	.040	.590	.540	.590		.020	.100		.040 MAX		.226 .234	.020	

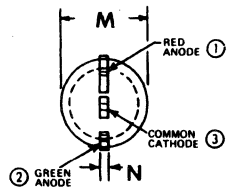

PD544

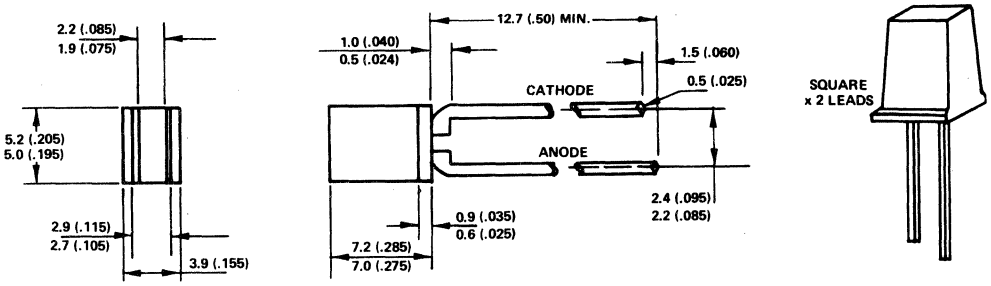

PD546

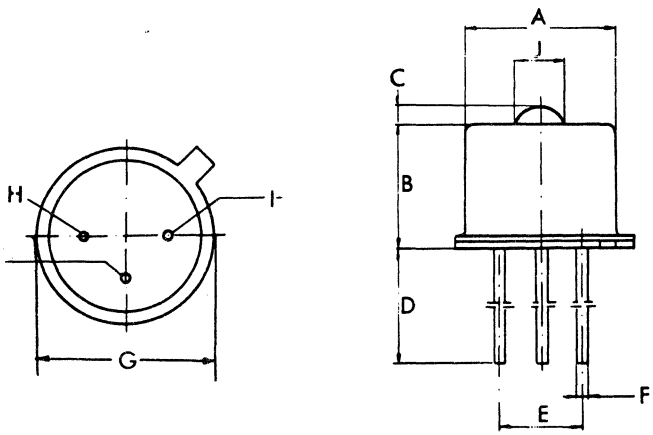

	A	B	C	D	E	F	G	H	I	J
PD546	.183 .185	.169 .177	.020	.551	.100	.016				.059
PD546a	.189 MAX			.500 MIN		.020 MAX	.228 MAX	.046 MAX	.046 MAX	.055 .063

PD547

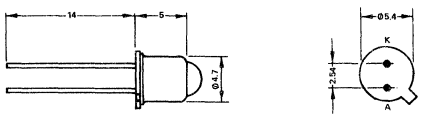

PD548

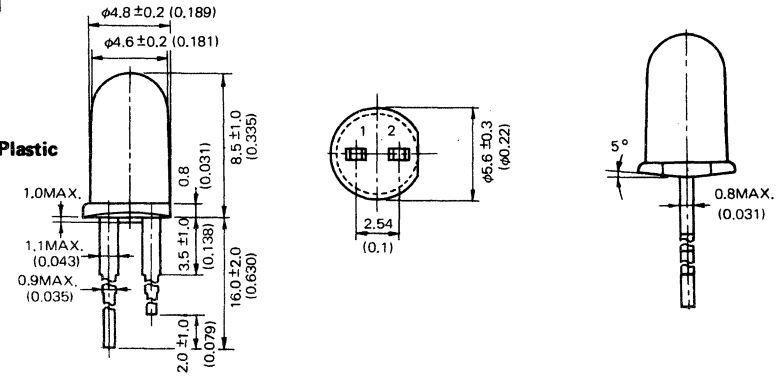

49. OUTLINE DRAWINGS

PD550

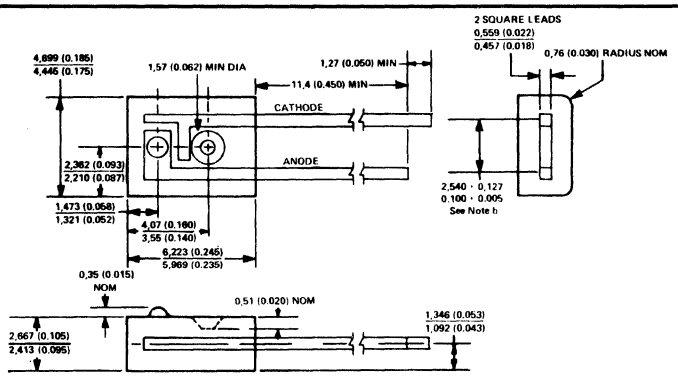

NOTES: a. All dimensions are in millimeters and parenthetically in inches.
b. Lead spacing is measured where the leads emerge from the package.

PD551

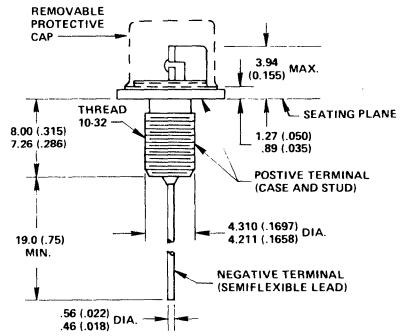

PD552

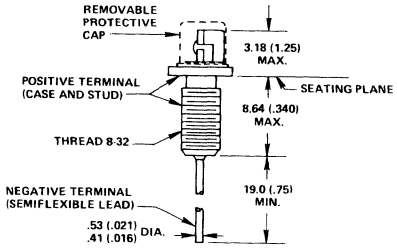

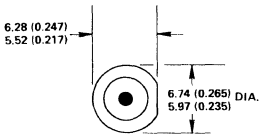

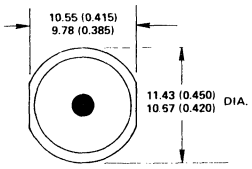

PD553

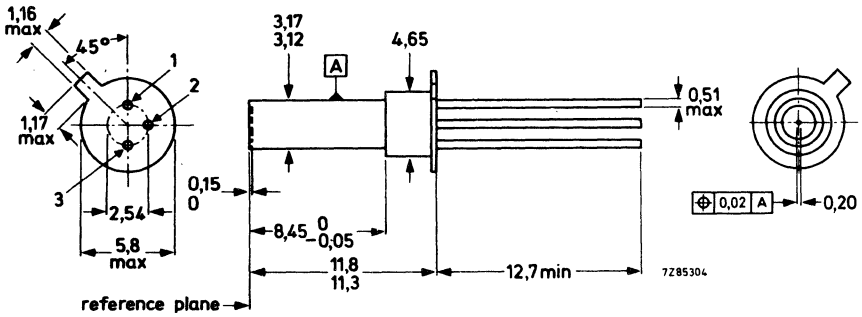

PD554

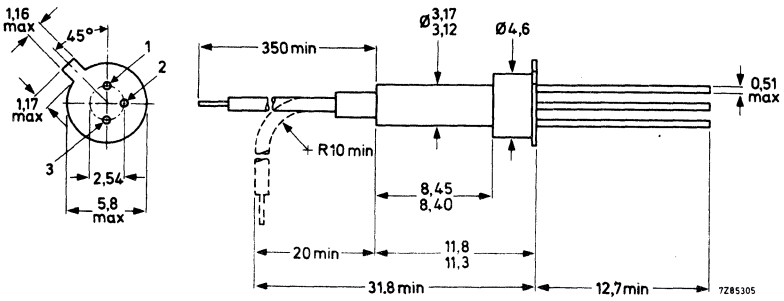

49. OUTLINE DRAWINGS

PD562

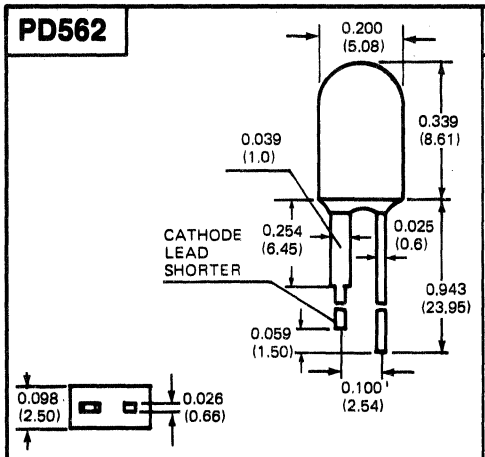

PD568

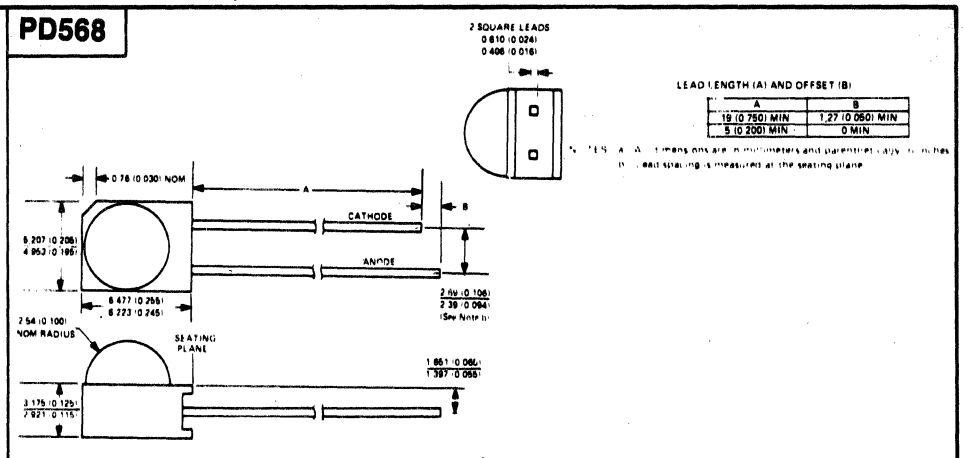

PD567

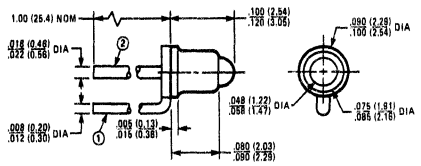

PD570

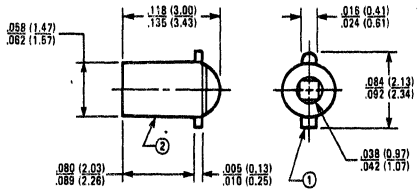

PD574

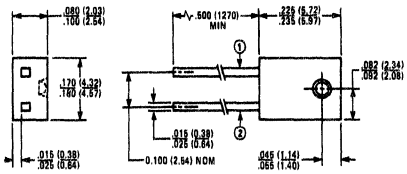

PD580

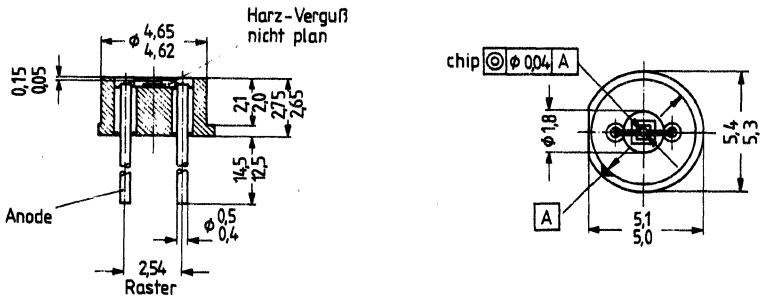

PD926

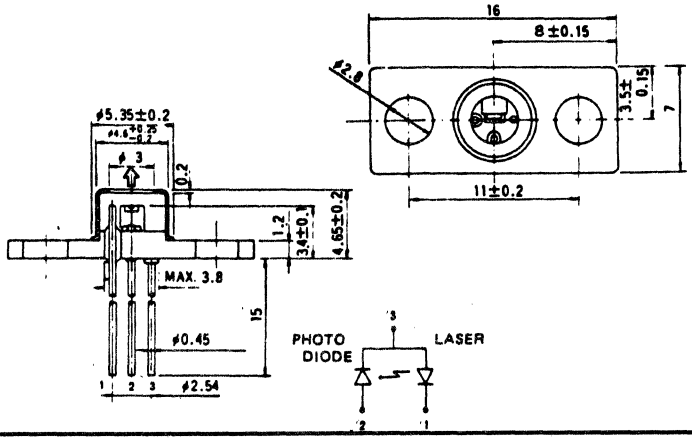

49. OUTLINE DRAWINGS

PD588

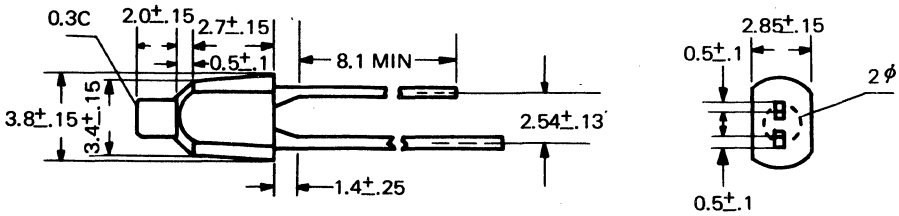

PD589

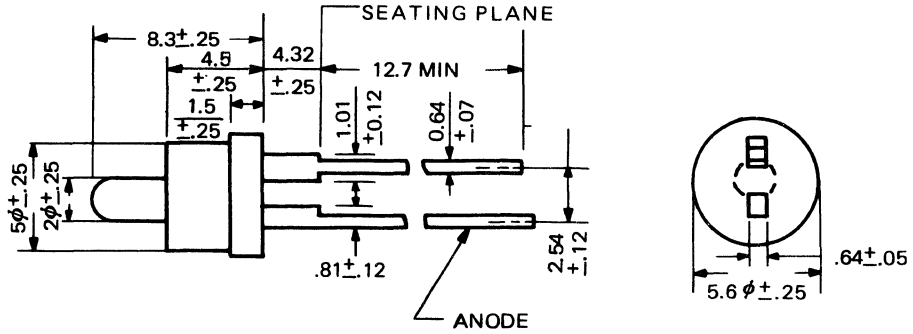

PD607

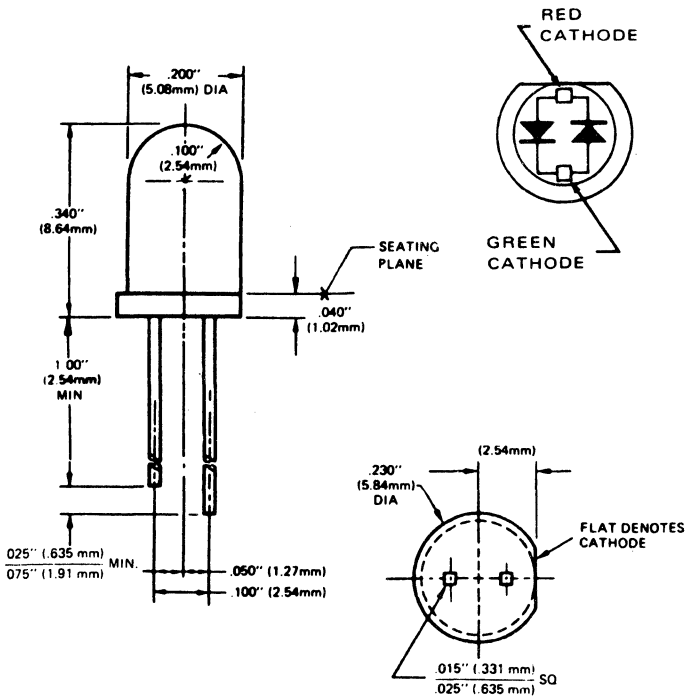

PD608

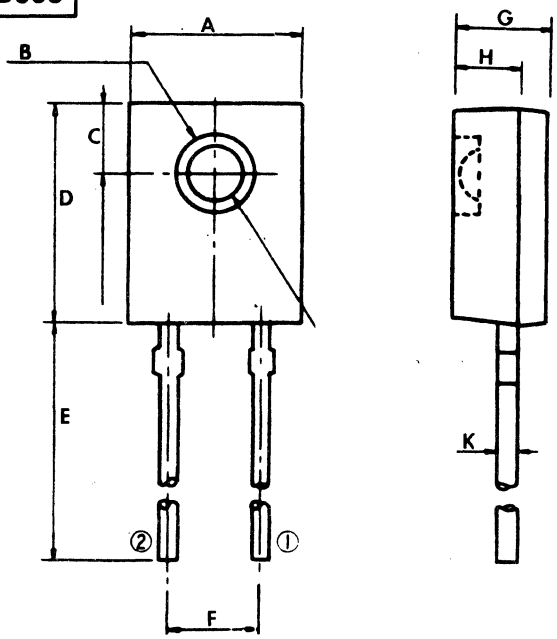

	A	B	C	D	E	F	G	H	J	K
PD608	.181	.078 NOM	.070 NOM	.224	.559	.100	.100	.075	.055	.020
PD608a	.181	.078 NOM	.067 NOM	.224	1.000	.100	.100	.075	.055	.020
PD608b	.197	.078 NOM	.071 NOM	.197	.504	.098	.104		.055	.020
PD608c	.175 .185	.078 DIA	.070 NOM	.220 .228	1.78 MIN	.095 .105	.095 .105	.003 .008		.017 .023

49. OUTLINE DRAWINGS

PD609

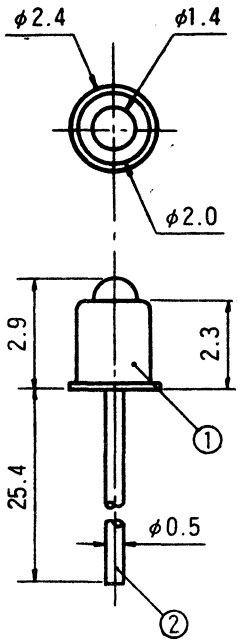

PD611

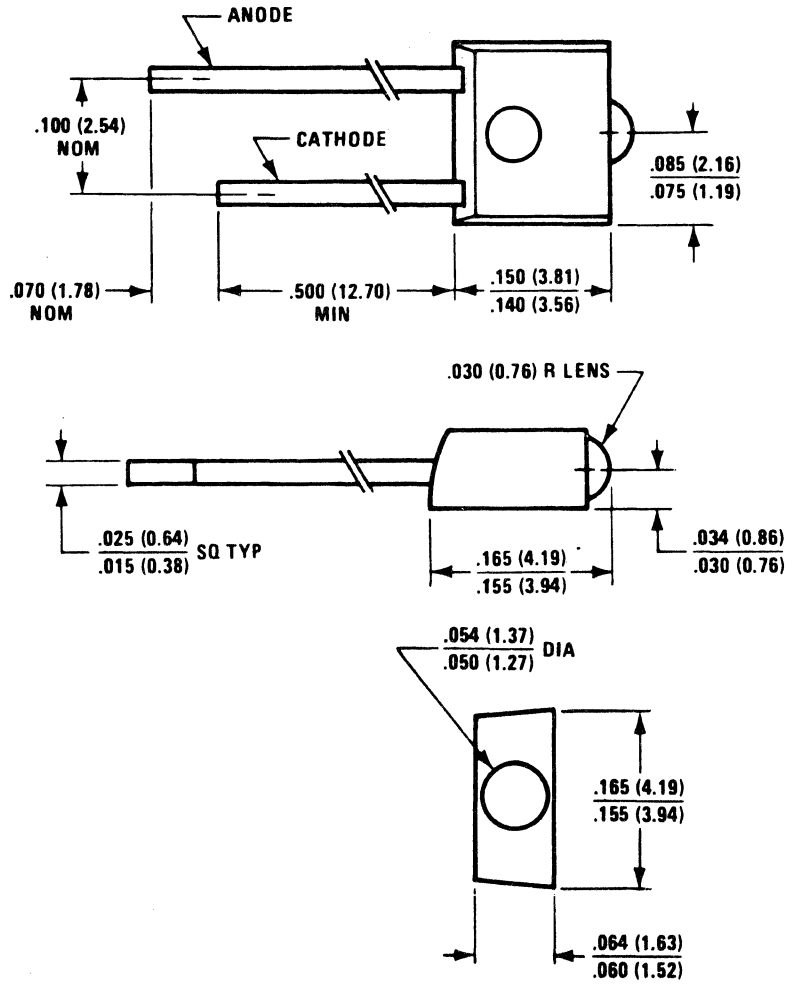

DIMENSIONS ARE IN INCHES (MILLIMETERS)

PD612

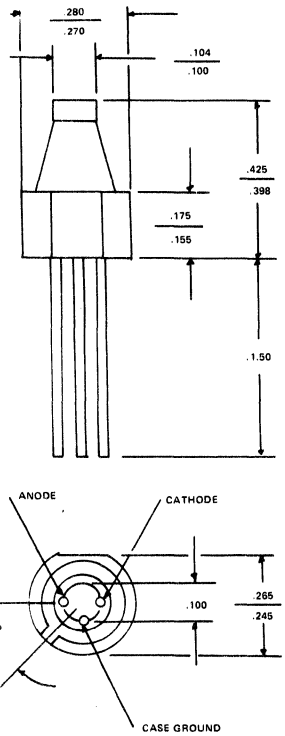

PD42

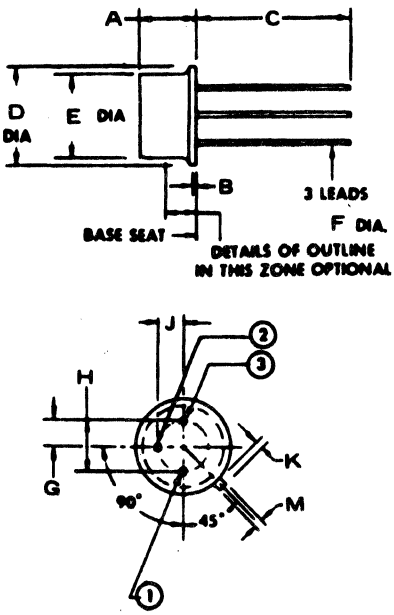

	A	B	C	D	E	F	G	H	J	K	M
PD42	.200 / .220	.009 / .125	.500 MIN	.335 / .370	.305 / .335	.016 / .019	.100	.200	.100	.029 / .045	.028 / .034
PD42a	.150 / .170	.020 / .030	1.500 MIN	.335 / .370	.305 / .335	.016 / .019	.100	.200	.100	.029 / .045	.028 / .034
PD42c	.259 MAX		1.499 MIN	.370 MAX	.334 MAX	.018 MAX	.100	.200	.100	.039 MAX	.033 MAX
PD42h	.196		.551	.212	.185			.100			
PD42j	.165 / .185			.335 / .370	.290 / .335	.017 / .021		.190 / .210		.029 / .045	.028 / .035
PD42k	.200	.016	.547	.211	.181		.075		.075	.039	.039
PD42m	.160 MAX	.025	.500 NOM	.362 MAX						.040 MAX	
PD42n	.185 MAX		.500 MIN	.370 MAX	.335 MAX	.020 MAX	.100	.200	.100	.039 MAX	.034 MAX
PD42p	.118 MAX		.472 MIN	.220 MAX	.189 MAX	.017				.039	.039
PD42r	.145		.492 MIN	.212	.181	.017	.050	.100	.050		
PD42s	.146		.500 MIN	.211 / .230	.157 / .213		.051	.100	.051		.039
PD42t	.150		.500 MIN		.155	.018					
PD42u	.180		.500 MIN		.240	.018					
PD42v	.118 / .134		.492 MIN	.226 MAX		.016 / .020		.100			
PD42w	.130		0.5 MIN	.210	.155						
PD42x	.136 / .156	.030 MAX	.750 MIN	.209 / .224	.180 / .186	.016 / .019	.050	.100		.028 / .048	.036 / .046
PD42y	.126 / .165			.319 / .330	.236						
PD42z	.204 MAX	.027	.500	.370 MAX	.334 MAX	.020	.100	.200	.100	.039 MAX	.033 MAX
PD42aa	.161 / .185	.027	.500	.334	.334	.020	.100	.200	.100	.039	.033
PD42ab	.133 / .149		.472 MIN	.204 / .220	.181 / .188	.017 TYP	.047 / .055	.088 / .110	.047 / .055	.039 TYP	.039 TYP

49. OUTLINE DRAWINGS

PD627

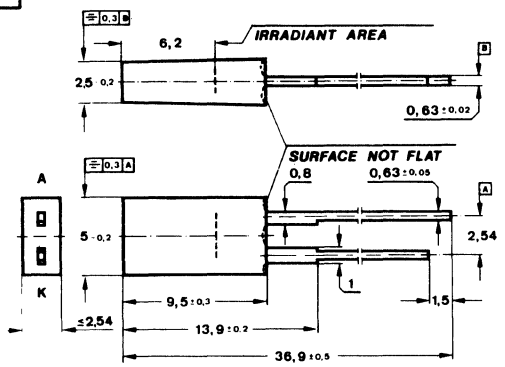

PD628

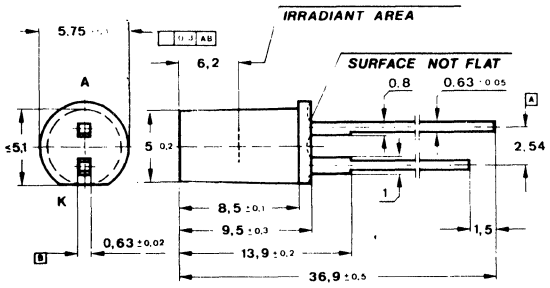

PD629

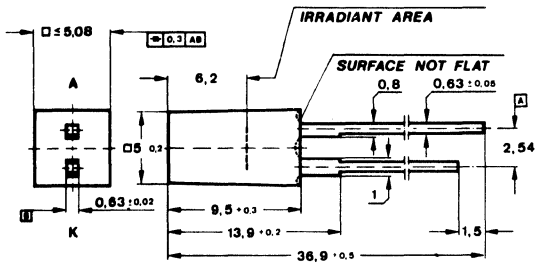

PD630

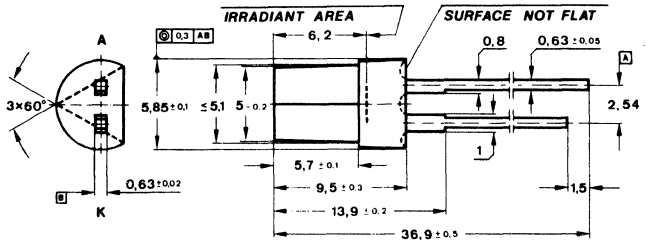

PD631

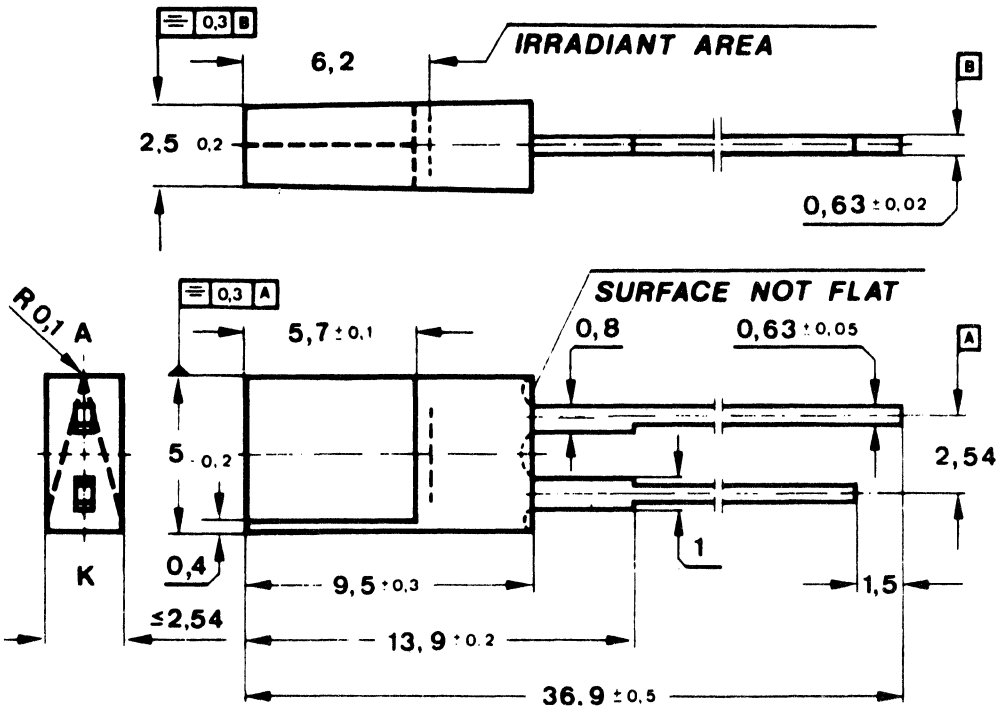

49. OUTLINE DRAWINGS

PD902

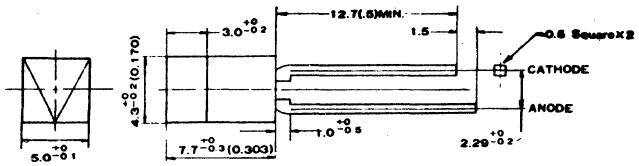

PD903

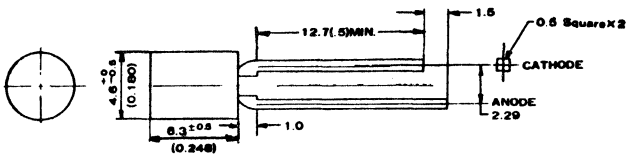

PD904

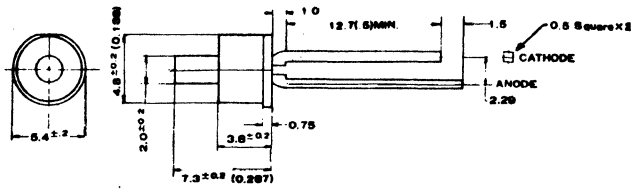

PD905

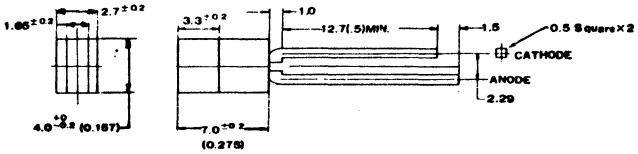

PD906

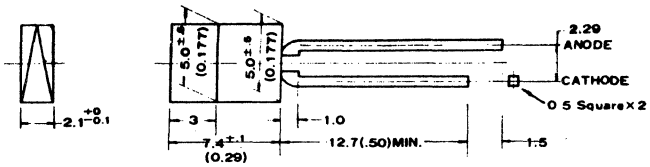

PD907

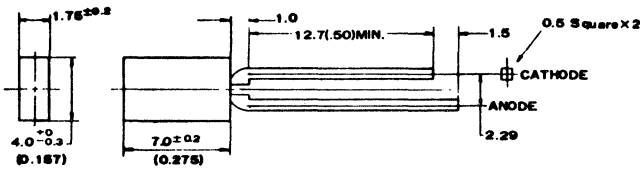

PD908

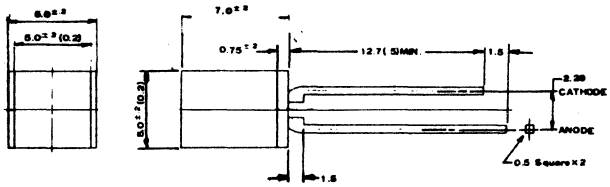

49. OUTLINE DRAWINGS

PD909

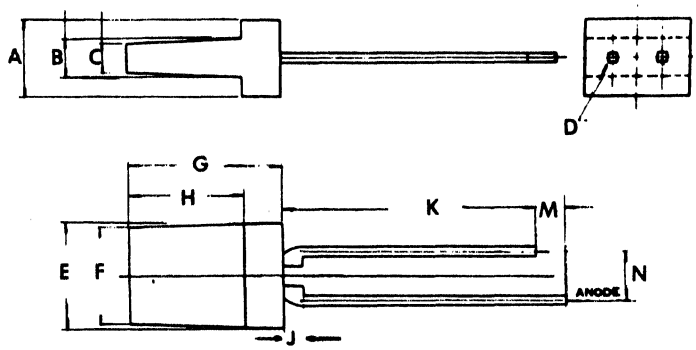

	A	B	C	D	E	F	G	H	J	K	M	N
PD909	.150 .165	.071 .087	.063 .079	.020	.209 .224	.201 .217	.307 .329	.228 .244	.059	.500 MIN	.059 NOM	.090 NOM
PD909a	.118	.098 .106	.071 .083	.020	.193 .200	.193 .200	.280 NOM	.252 NOM	.020 .039	.500 MIN	.059 NOM	.090 NOM
PD909b	.130 .146	.031 .047	.024 .039	.020	.189 .205	.181 .197	.323 MAX	.138 NOM	.059	.500 MIN	.059 NOM	.090 NOM
PD909c	.110	.059	.059	.016	.154	.154	.276	.276		.630 MIN	.079	.098
PD909d	.118	.039	.039	.016	.193	.193	.295	.295		.630 MIN	.079	.098

PD912

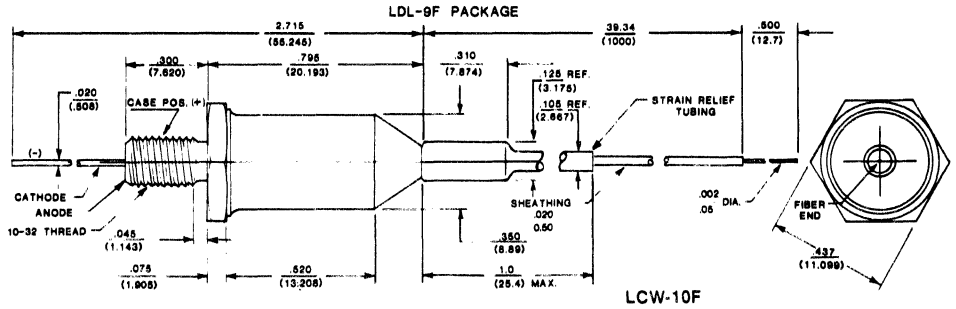

PD913

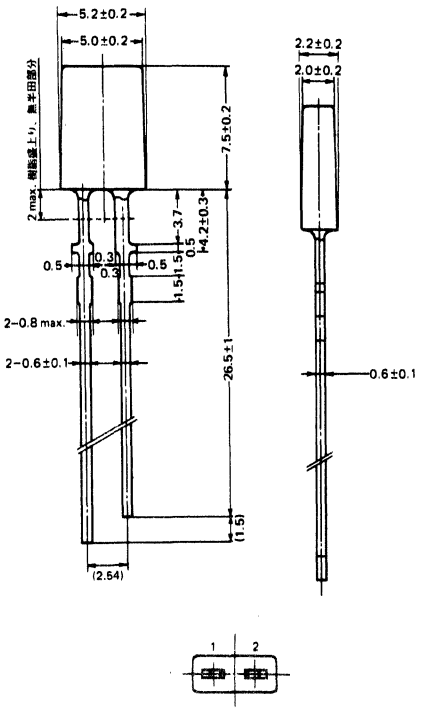

PD914

	A	B	C	D	E	F	G	H	J	K	L	M	N	P	Q	R	S	T
PD914	.071	.102 .118	.071	.028	.028	.016 .024	.012 .019	.081 .093	.114 .138	.114 .138	45°	.393 MIN	.393 MIN	.102 .118	.033 .045	.031 .039	.006	.071
PD914a	.071	.102 .118	.071	.024 .031	.028	.016 .024	.012 .019	.081 .093	.114 .138	.114 .138	45°	.393 MIN	.393 MIN	.102 .118	.028 .039	.037 .045	.006	.067 .075

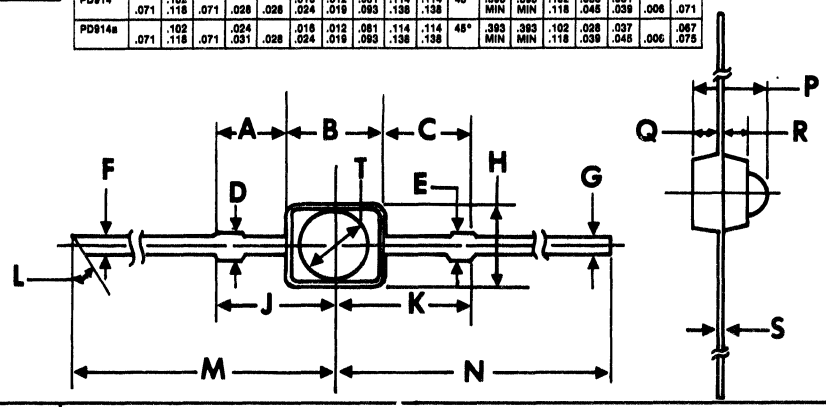

PD915

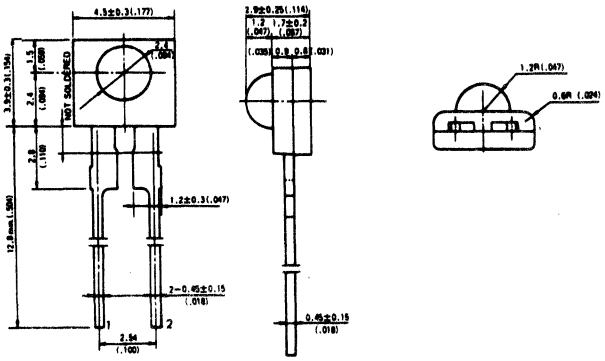

49. OUTLINE DRAWINGS

PD917

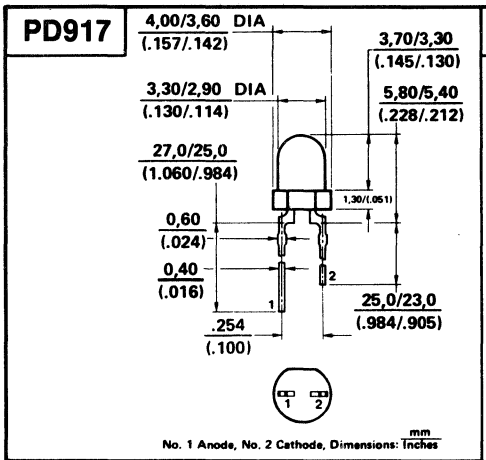

PD919

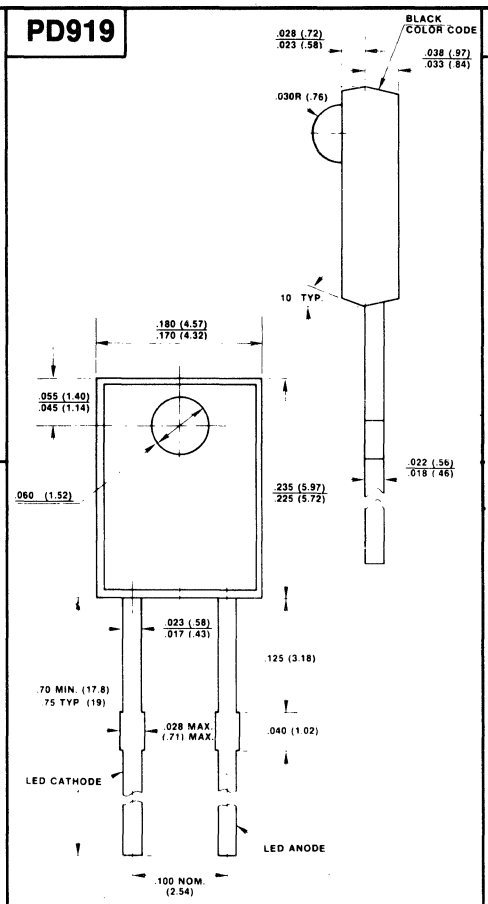

PD922

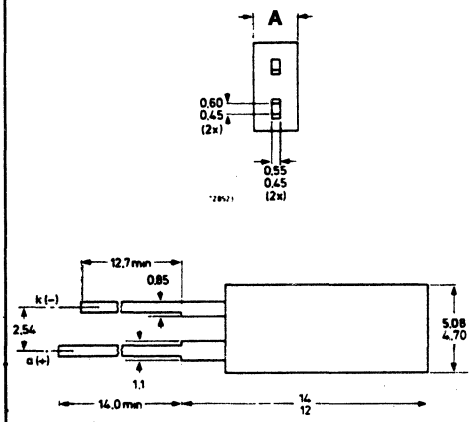

	A
PD 922	2.35/2.54
PD 922a	3.1/3.3

PD929

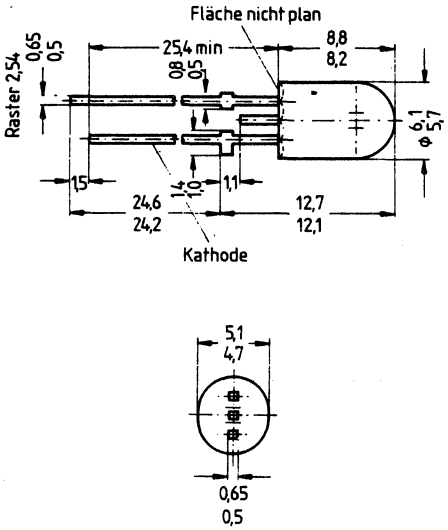

PD928

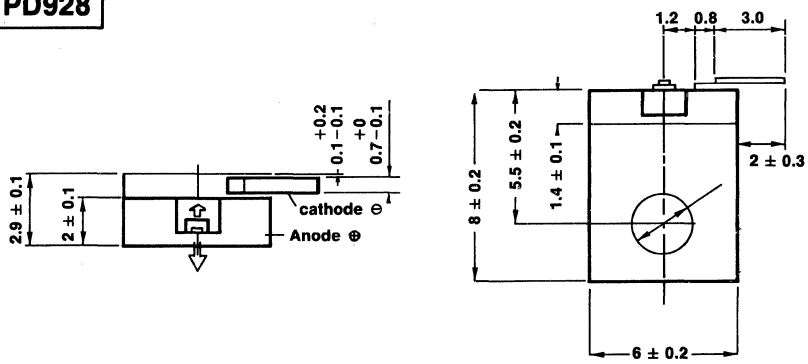

NOTE:
the arrow shows direction of the laser beam.

PD925

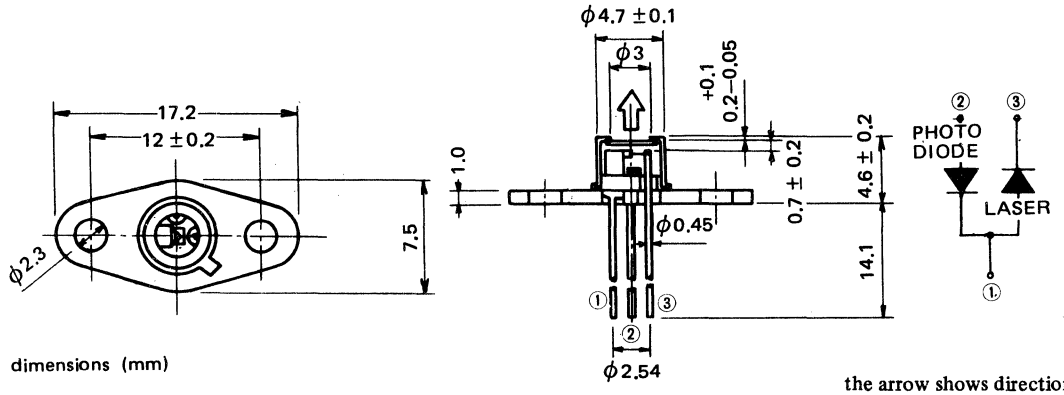

dimensions (mm)

the arrow shows direction of the laser beam

49. OUTLINE DRAWINGS

PD932

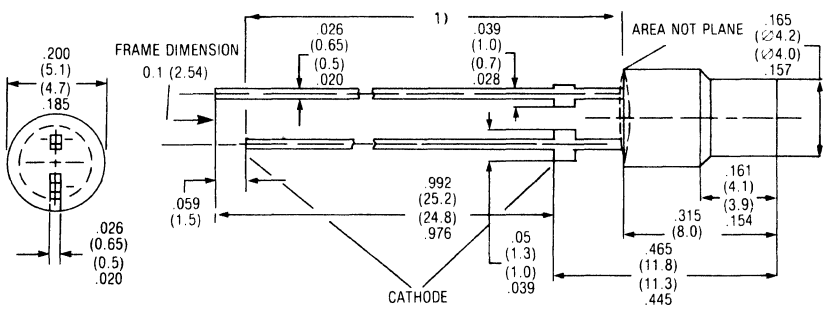

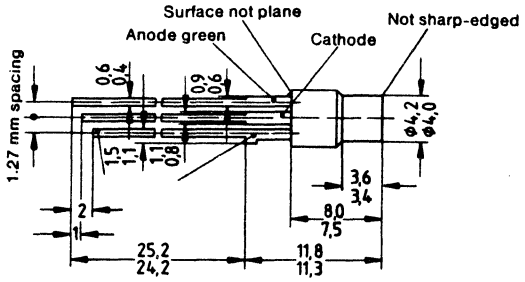

Approx. weight 0.4 g

PD932a – Dual element/Color

Dimensions in inches (mm)

PD933

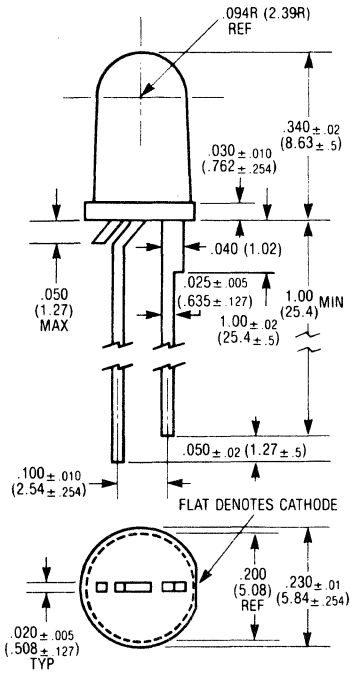

PD934

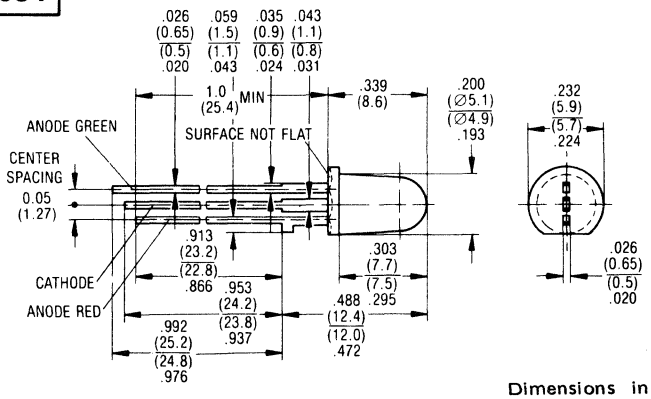

Dimensions in inches (mm)

PD935

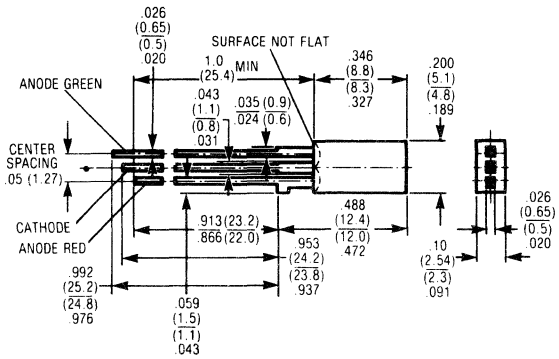

49. OUTLINE DRAWINGS

PD940

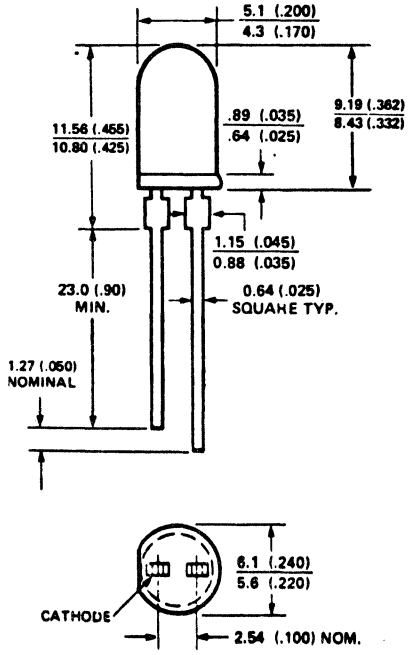

PD940a

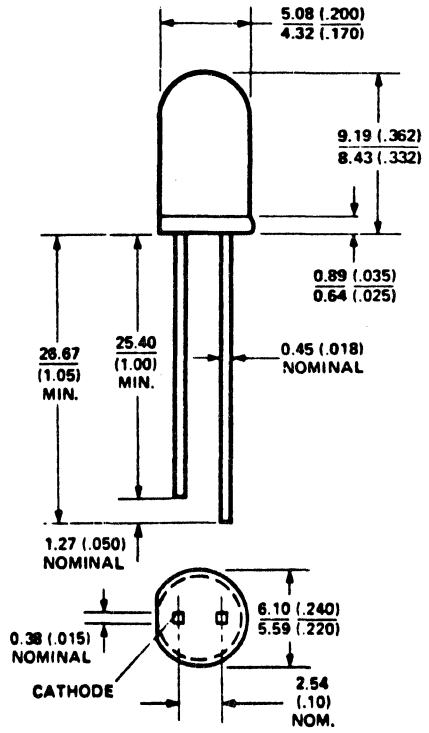

PD941

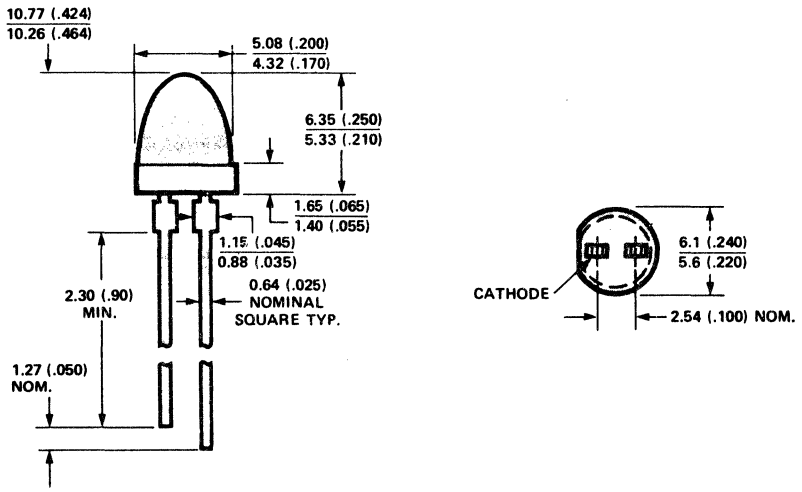

PD1019

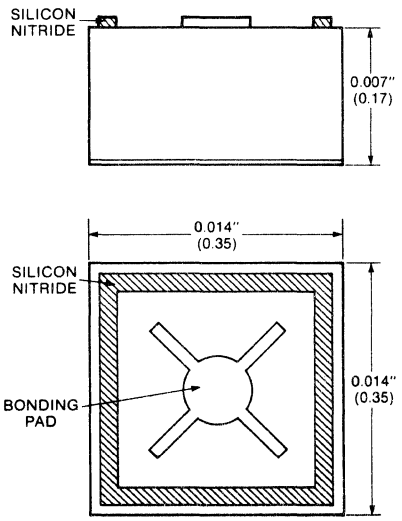

49. OUTLINE DRAWINGS

PD942

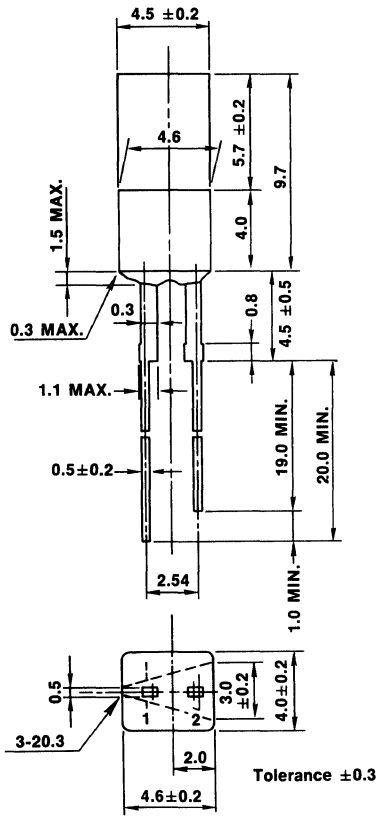

PD943

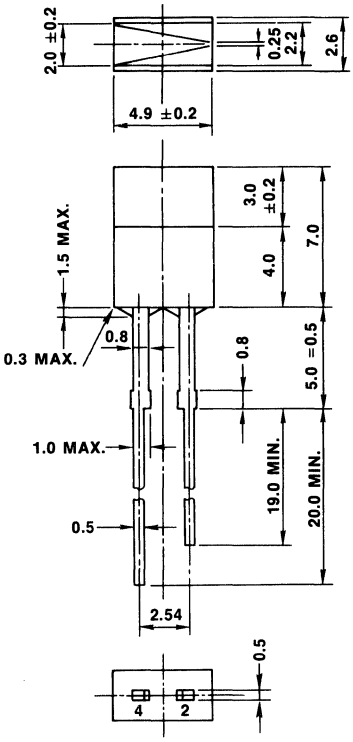

PD944

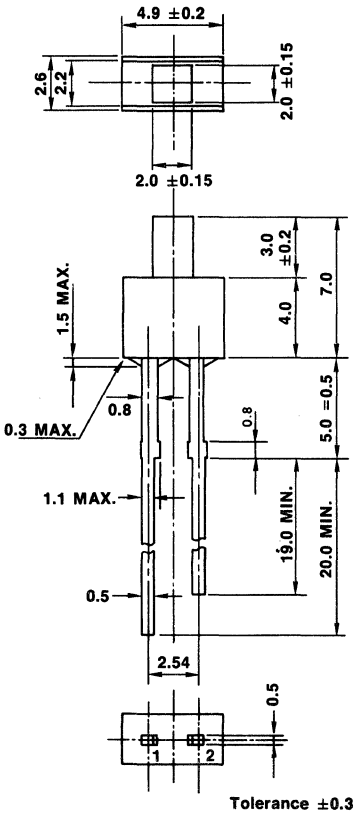

PD945

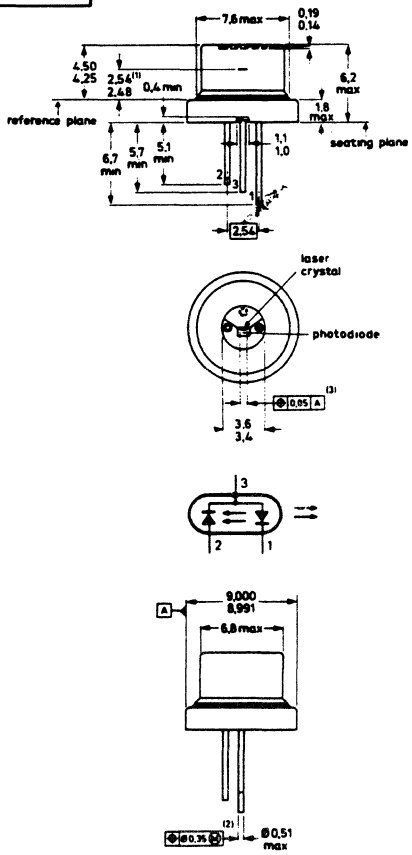

PD946

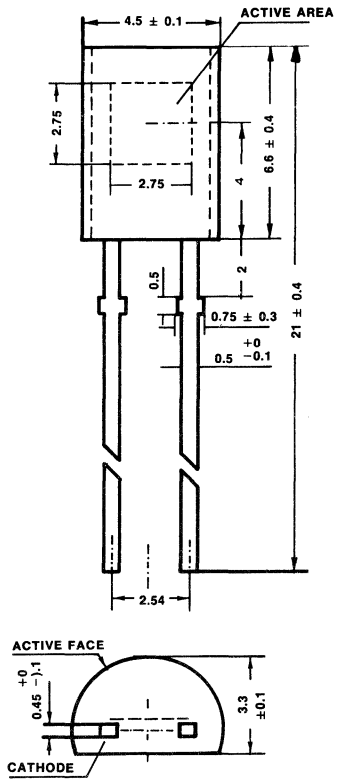

49. OUTLINE DRAWINGS

PD947

(Unit : mm)

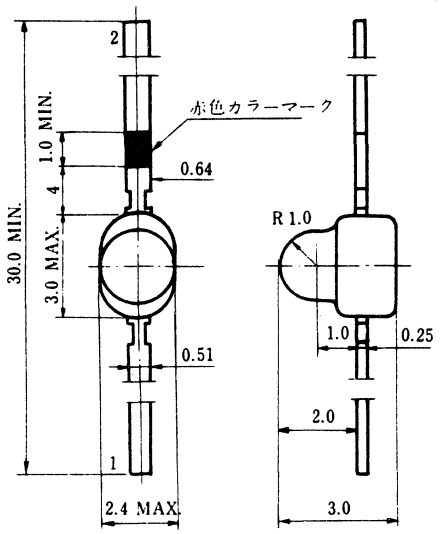

PD948

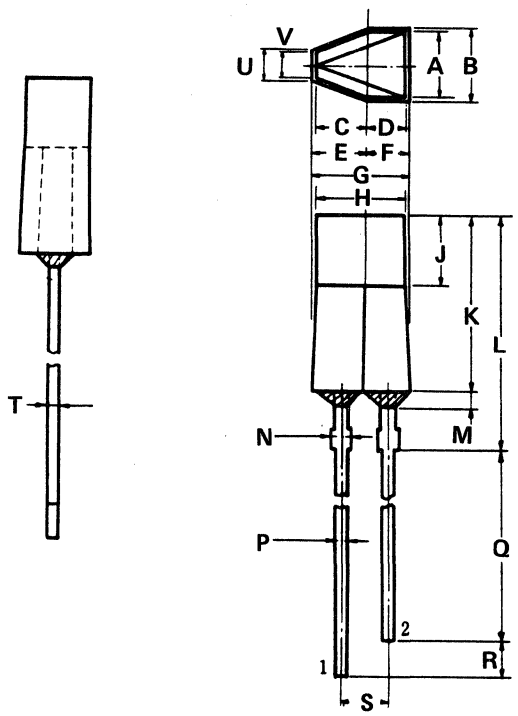

Suffix	A	B	C	D	E	F	G	H	J	K	L	M	N	P	Q	R	S	T	U	V
PD948	3.4 3.8	4.0 TYP	2.8 TYP	2.2 TYP	3.0 TYP	2.4 TYP	5.4 TYP	4.8 5.2	3.8 4.2	9.7 10.3	12.5 13.5	1.0 MAX	1.0 TYP	0.6 TYP	22 MAX	2.0 TYP	2.54 TYP	0.6 TYP	2.0 TYP	1.4 1.8
PD948a	3.4 3.8	4.0 TYP					4.9 TYP	4.5 TYP	3.5 TYP	7.2 TYP	10.7 11.7		1.1 TYP	0.6 TYP	9.5 TYP	1.5 TYP	2.5 TYP	0.6 TYP	1.4 TYP	

PD949

(Unit : mm)

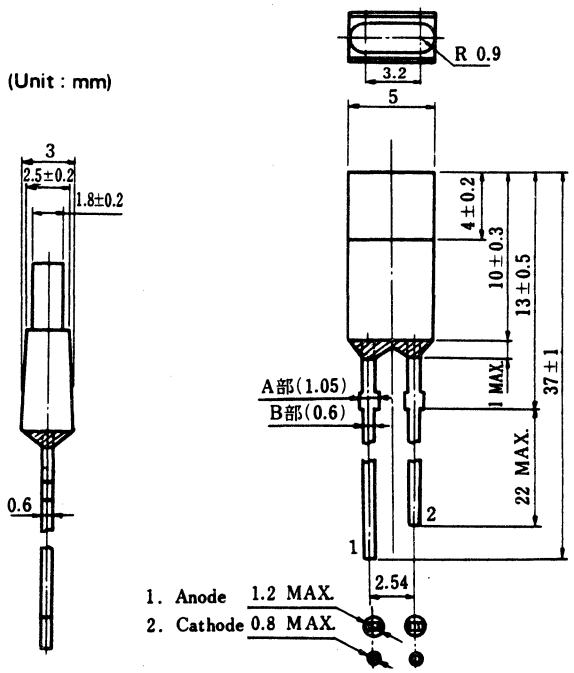

PD951

1. Anode
2. Cathode

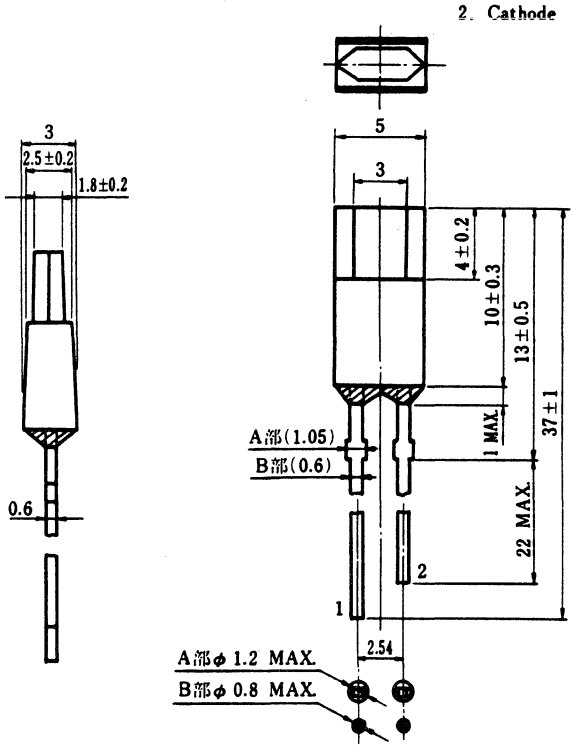

49. OUTLINE DRAWINGS

PD952

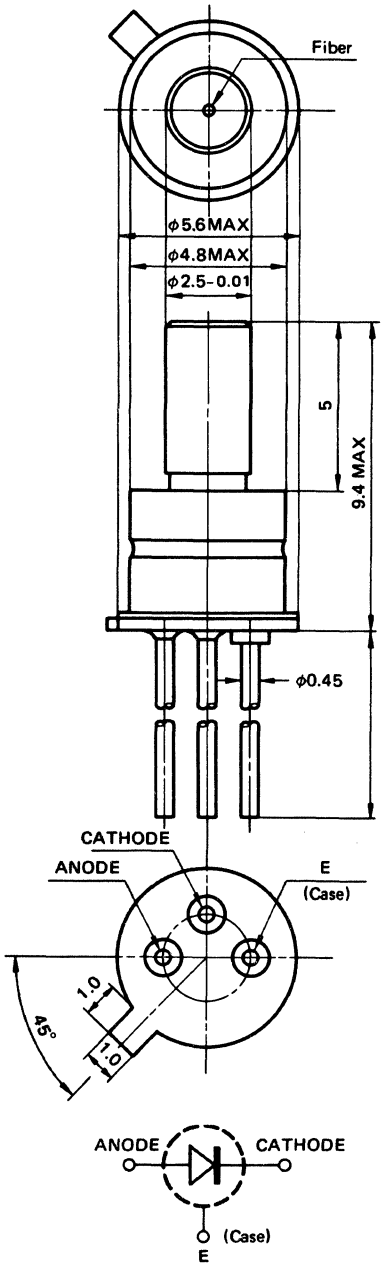

PD953

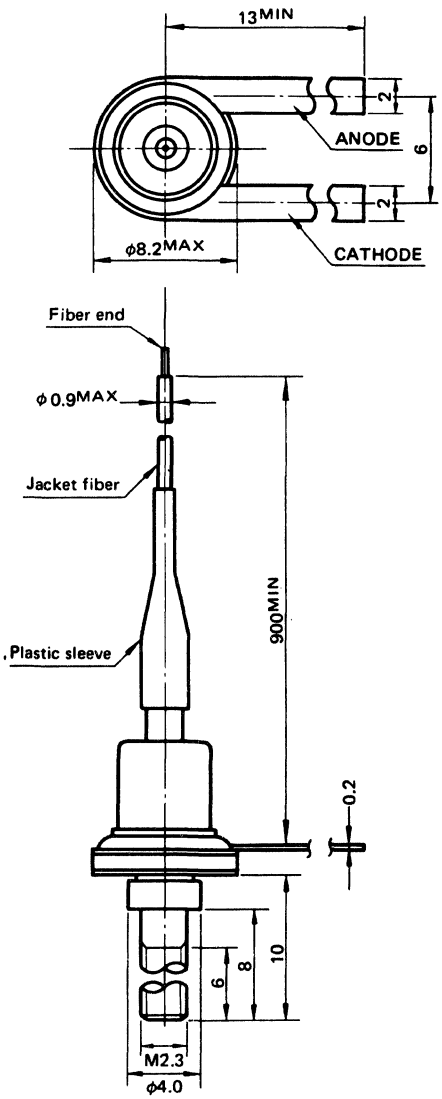

PD955

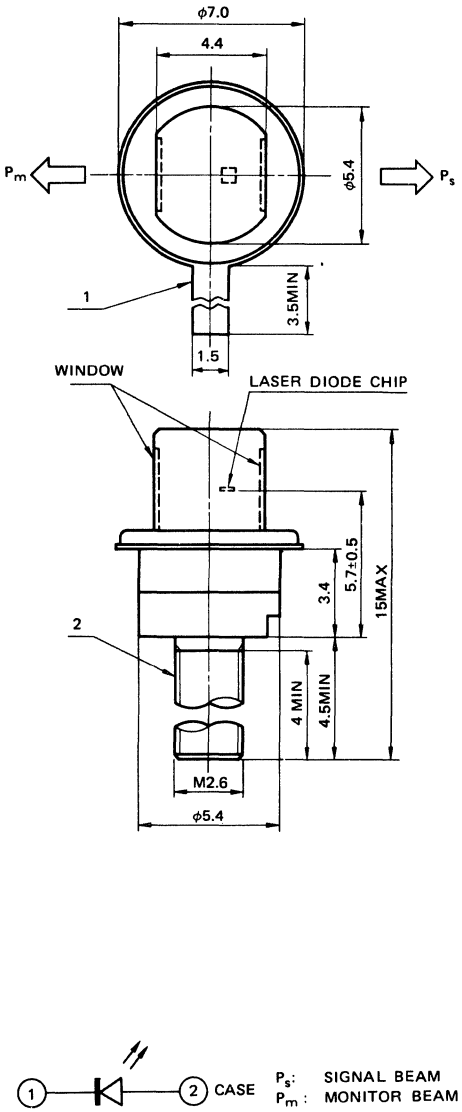

PD975

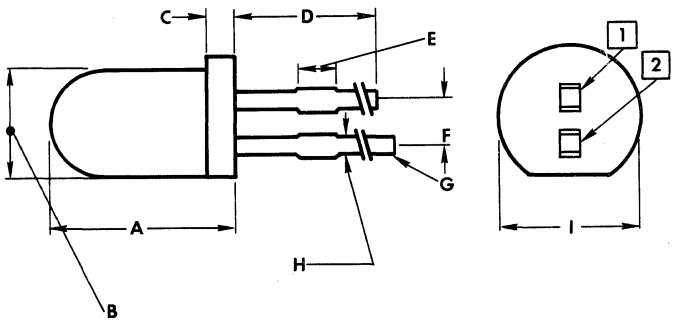

	A	B	C	D	E	F	G	H	I
PD975	.190 .210	.110 .126	.020 .040	.55 MIN	.085 NOM	.050 NOM	.017 .023	.026 MAX	.140 .160

LED	
1	ANODE
2	CATHODE

49. OUTLINE DRAWINGS

PD956

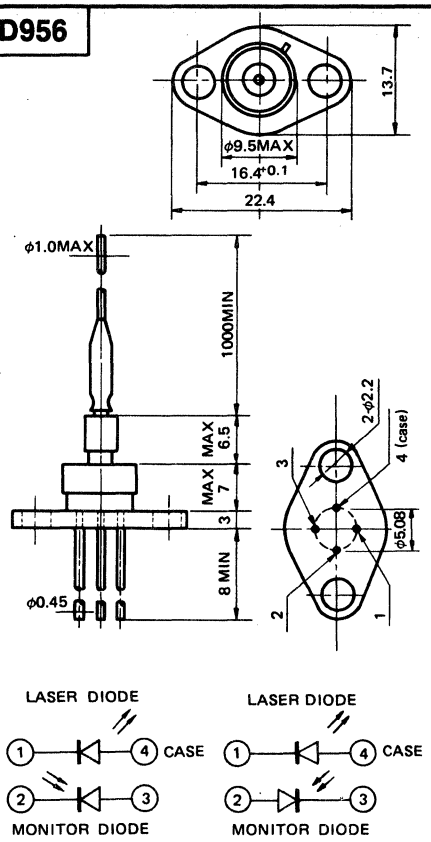

PD957

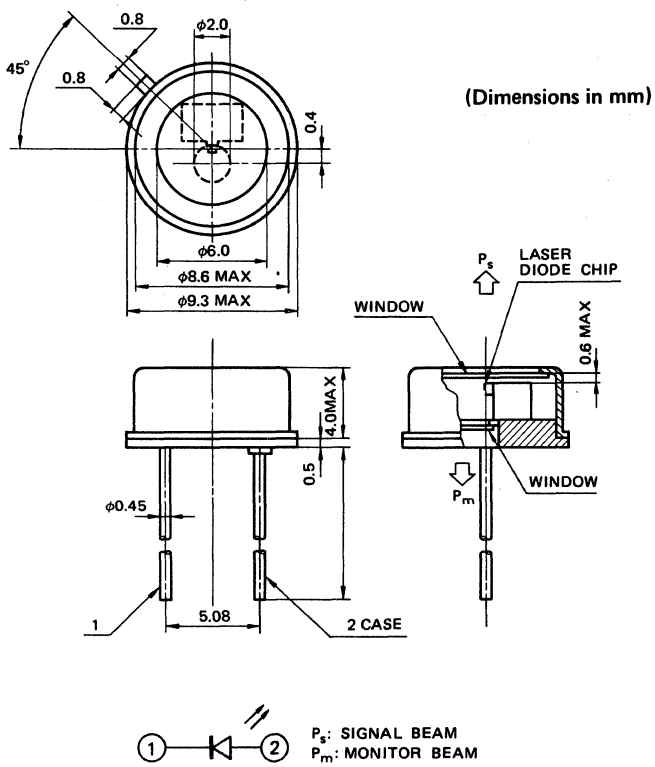

PD958

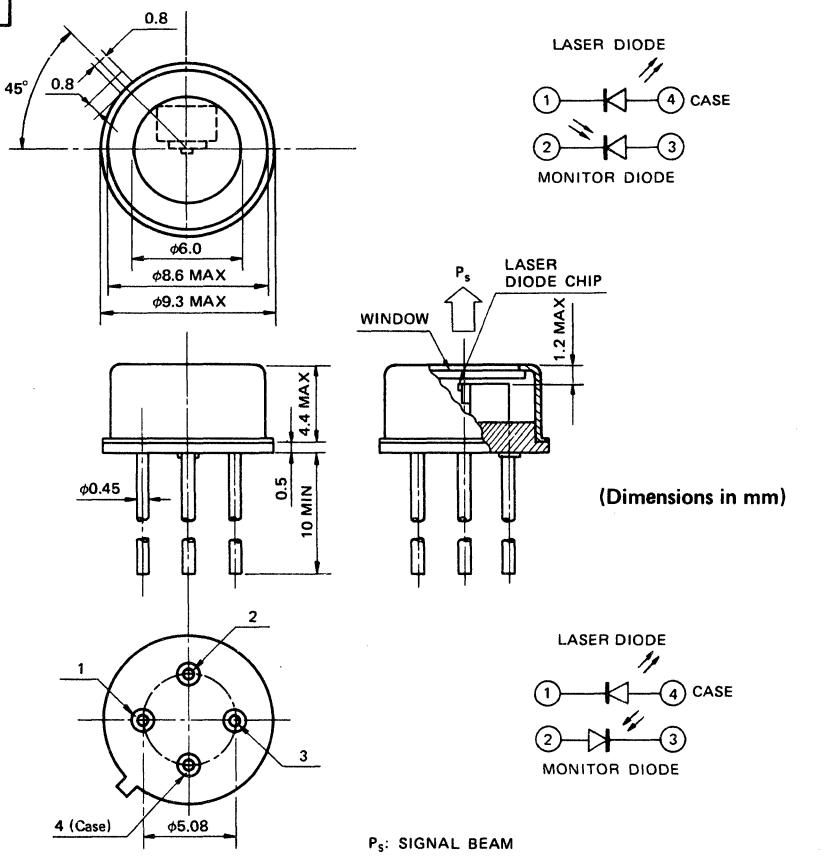

PD959

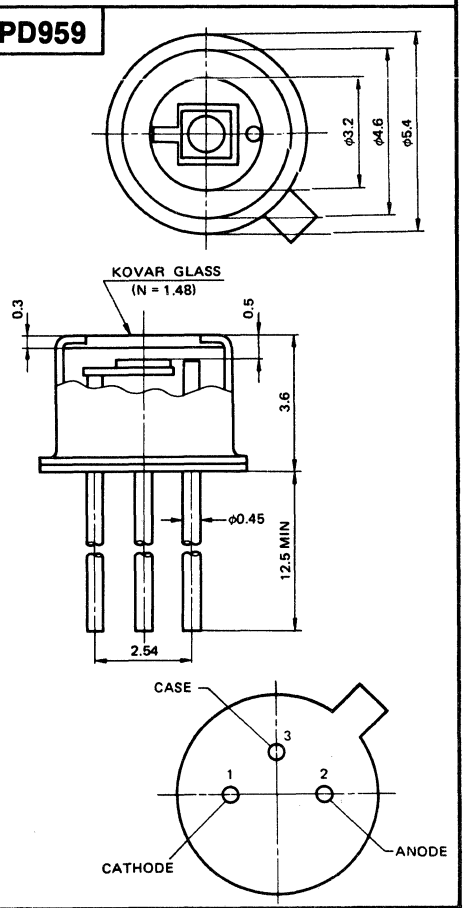

49. OUTLINE DRAWINGS

PD969

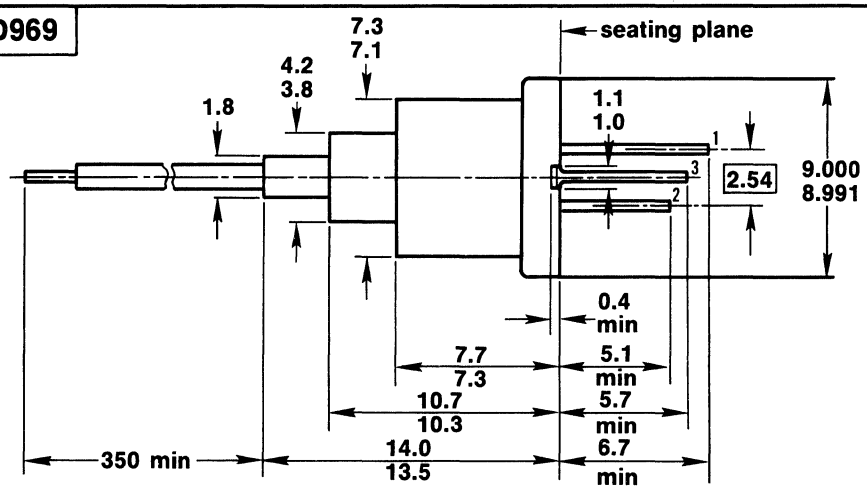

PD970

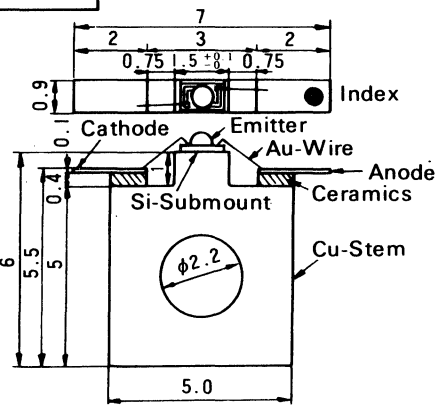

PD971

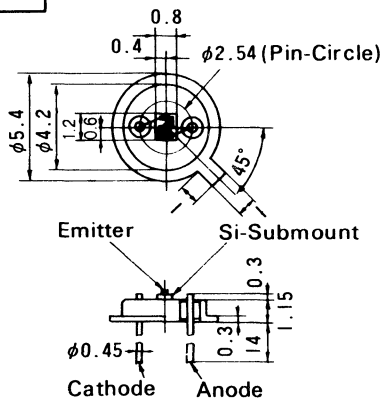

PD974

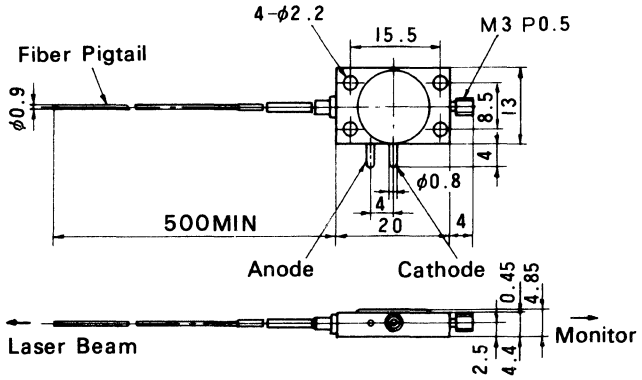

PD979

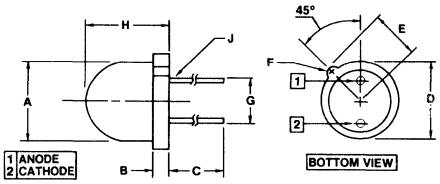

	A	B	C	D	E	F	G	H	J
PD979	8.13 8.43	1.78 1.91	38.9 MIN	9.07 9.58	9.70 10.50	.760 RAD	5.08 NOM	7.62 7.87	.510 NOM

Dimensions in mm

PD982

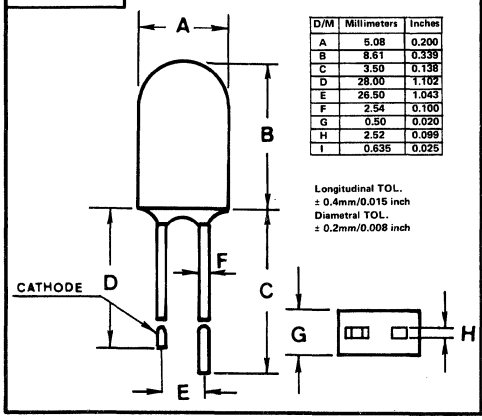

D/M	Millimeters	Inches
A	5.08	0.200
B	8.61	0.339
C	3.50	0.138
D	28.00	1.102
E	26.50	1.043
F	2.54	0.100
G	0.50	0.020
H	2.52	0.099
I	0.635	0.025

Longitudinal TOL.
± 0.4mm/0.015 inch
Diametral TOL.
± 0.2mm/0.008 inch

PD990

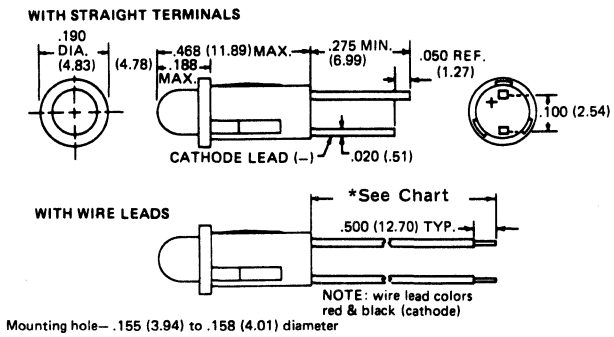

PD990a*	6" wire leads
PD990b*	8" wire leads
PD990c*	10" wire leads
PD990d*	12" wire leads
PD990e*	14" wire leads

49. OUTLINE DRAWINGS

PD991

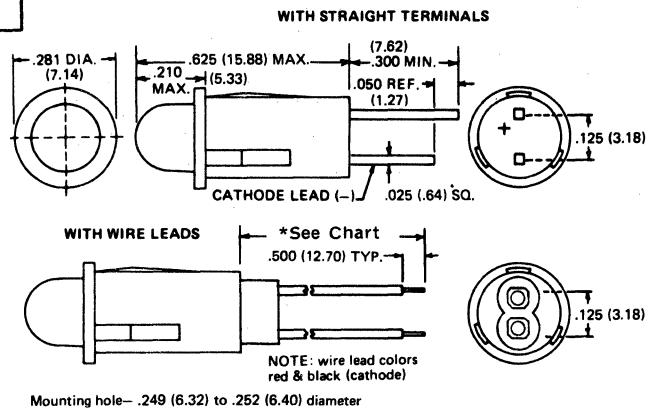

PD991a*	6" wire leads
PD991b*	8" wire leads
PD991c*	10" wire leads
PD991d*	12" wire leads
PD991e*	14" wire leads

PD992

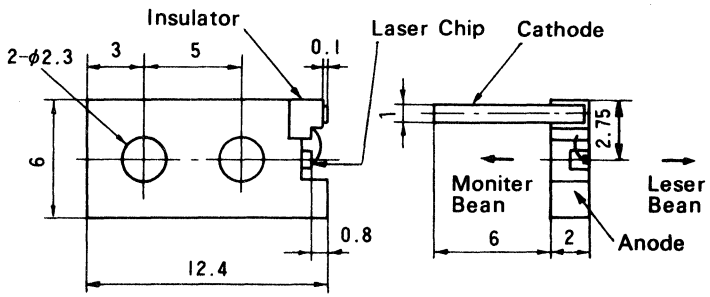

PD993

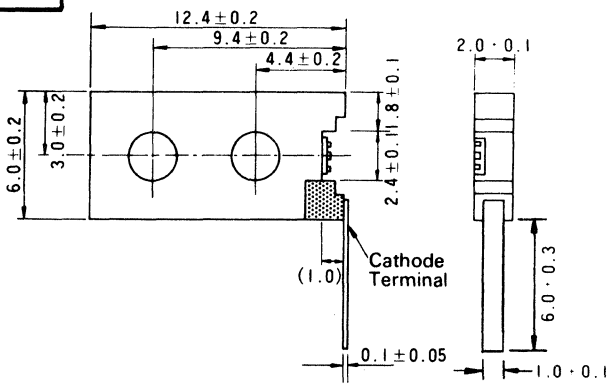

PD994

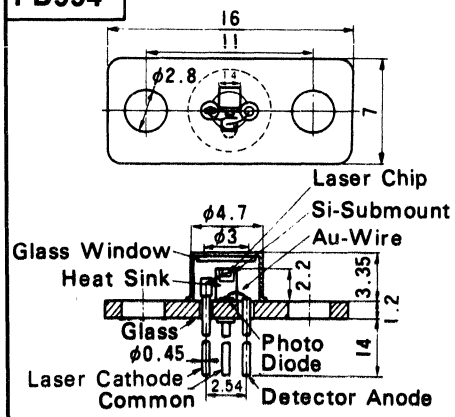

PD995

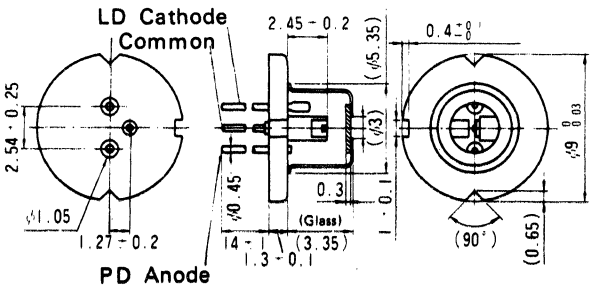

PD996

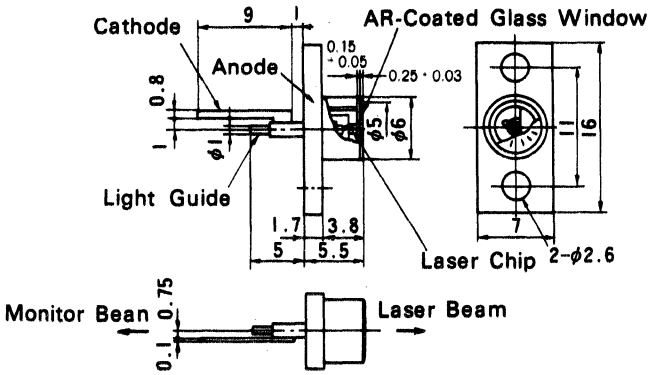

49. OUTLINE DRAWINGS

PD997

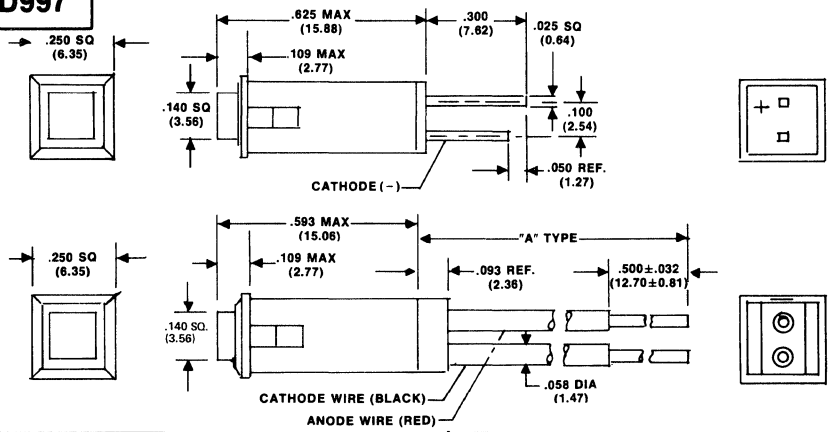

"A" +#2A AWG, SEE TABLE FOR LEAD LENGTH

PD997a *	6" wire leads
PD997b *	8" wire leads
PD997c *	10" wire leads
PD997d *	12" wire leads
PD997e *	14" wire leads

Recommended Mounting Hole
Recommend Diacro Punch & Die set P/N SSS 732 or Federal Carbide Punch/Die P/N FSS/FHS, 7/32 or equivalent for mounting hole.

PD998

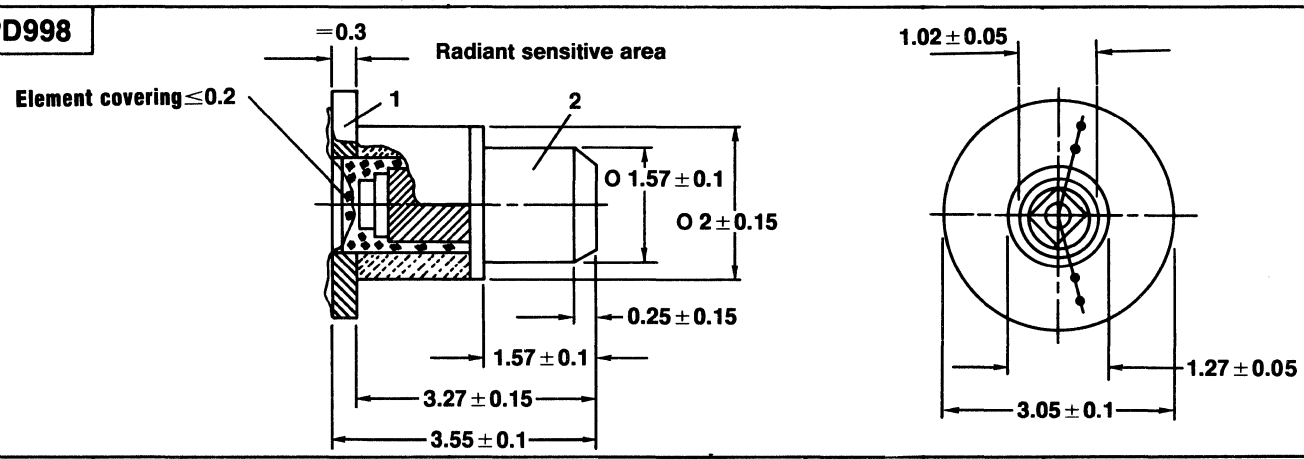

PD1000

Dimensions in mm

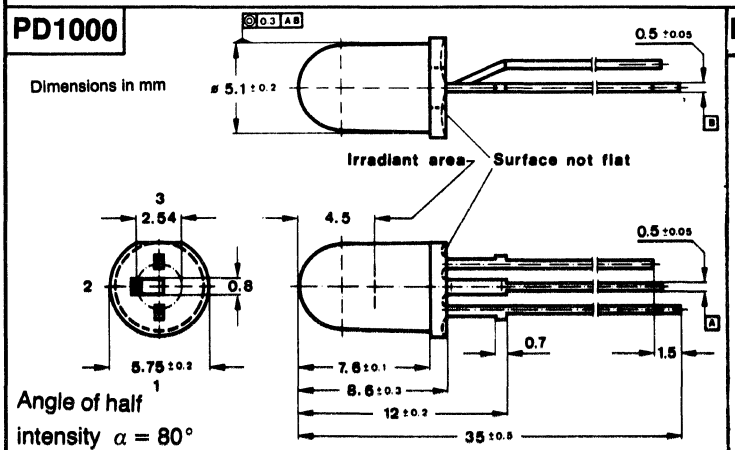

Angle of half intensity $\alpha = 80°$

PD1002

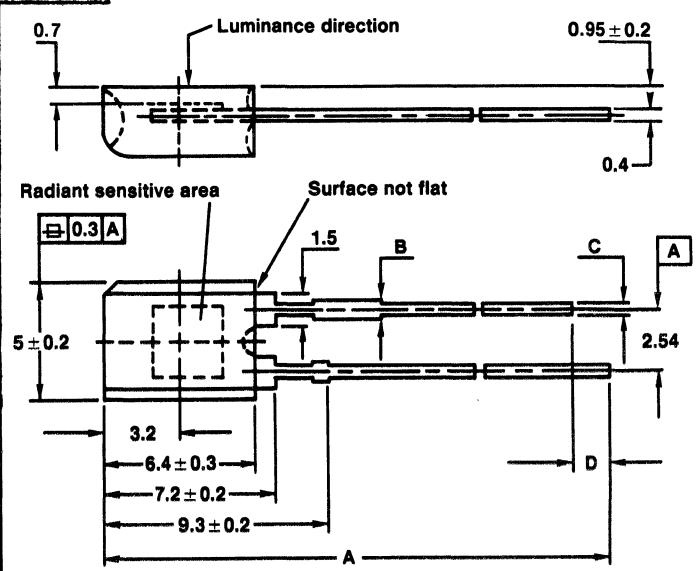

PD1001

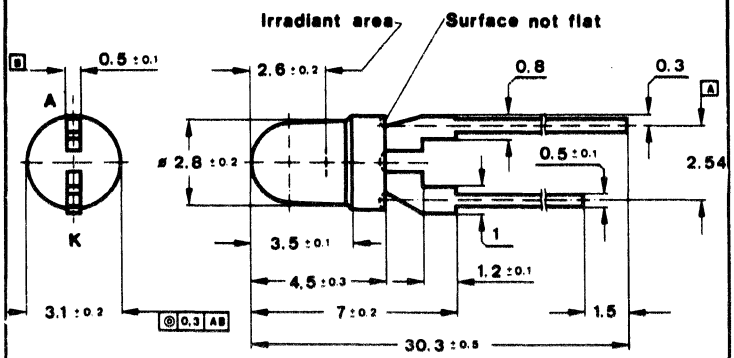

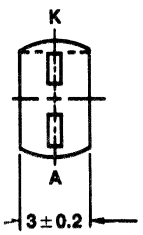

	A	B	C	D
PD1002	24.2 / 24.4	0.7	0.5	1.8
PD1002a	19.4 / 21.0	0.65	0.45	0.0

49. OUTLINE DRAWINGS

PD1003

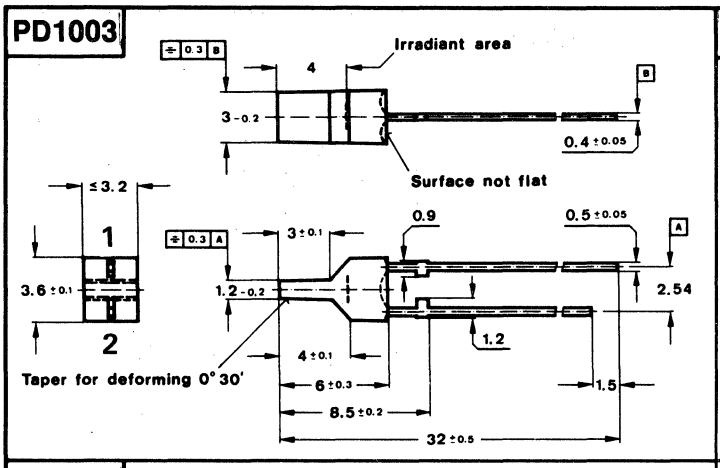

PD1004

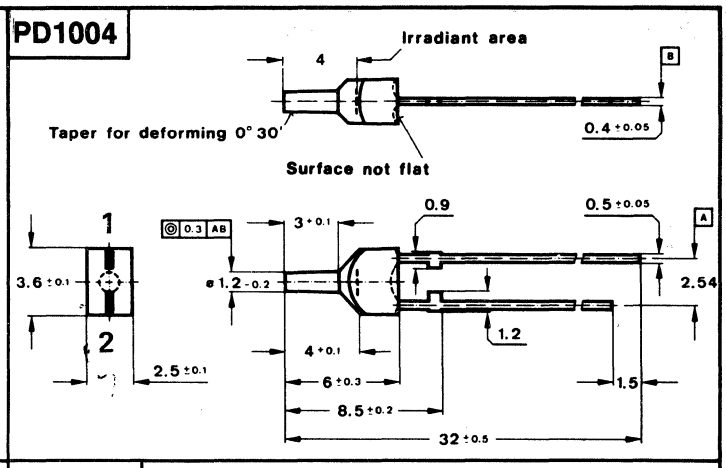

PD1005

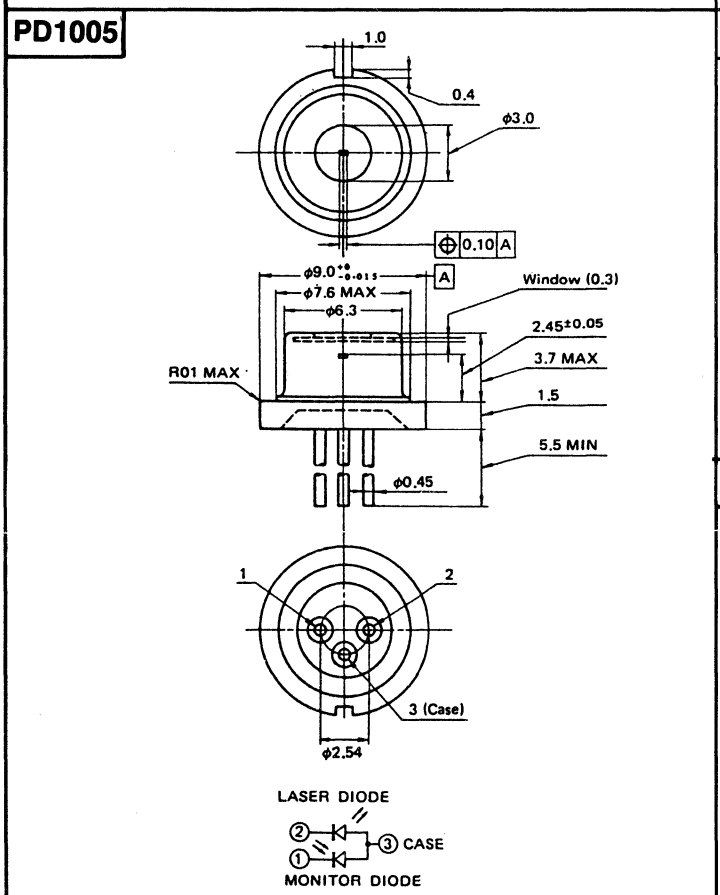

PD1005a

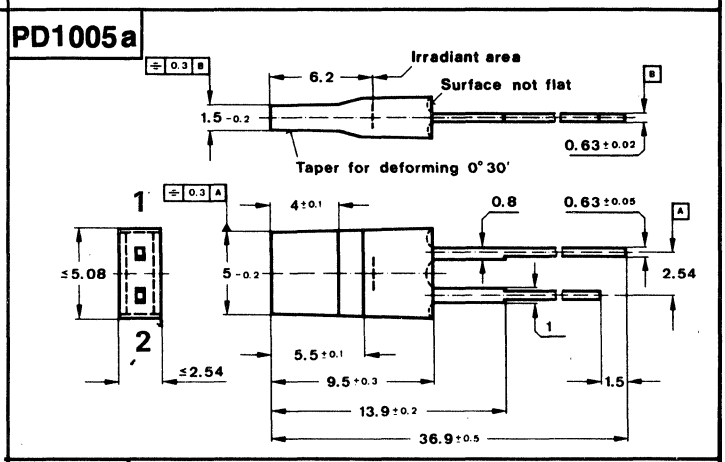

PD1006

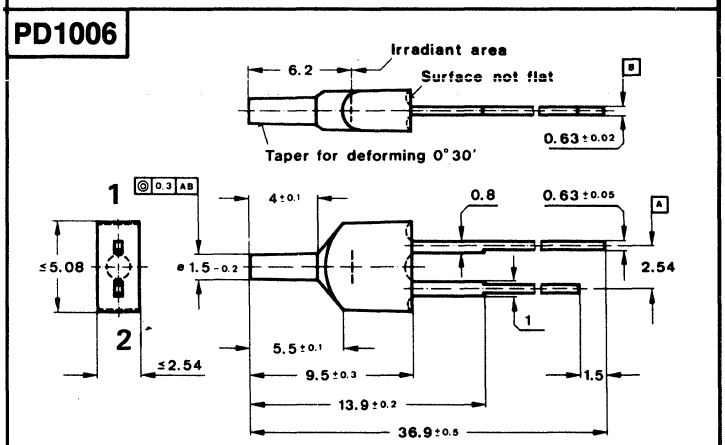

PD1007

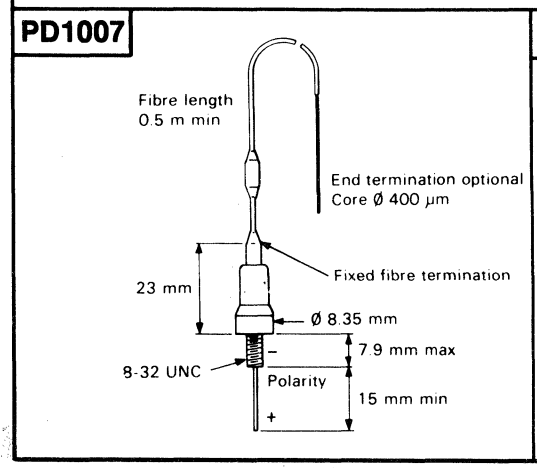

PD1008

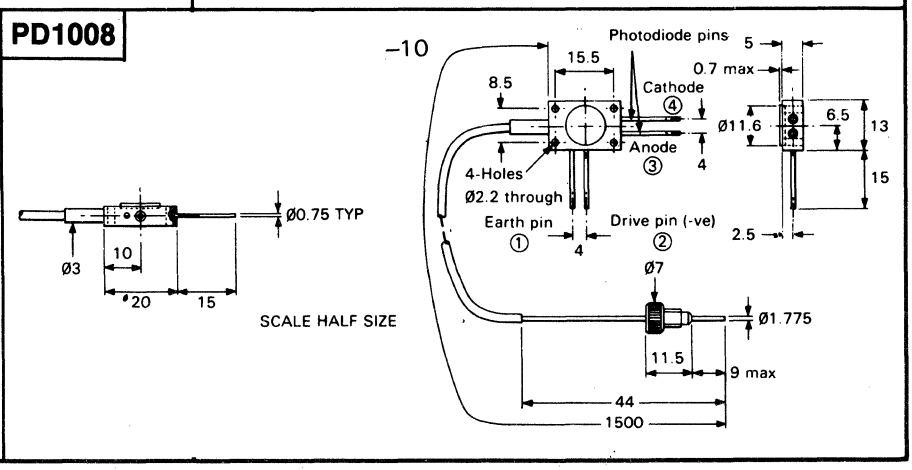

49. OUTLINE DRAWINGS

PD1009

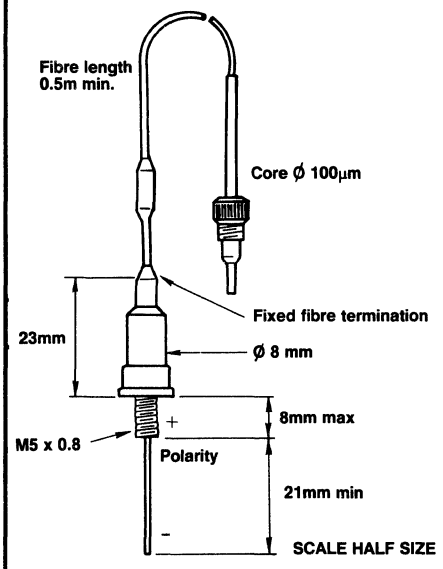

PD1010

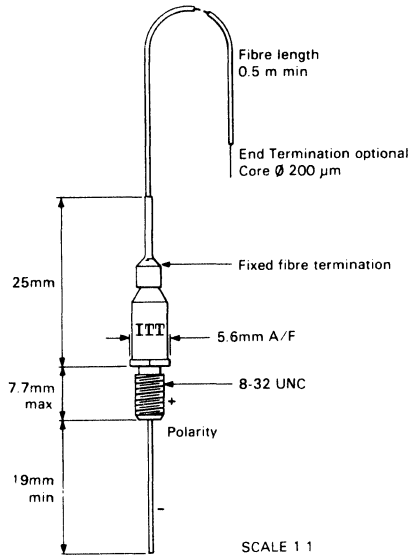

PD1013

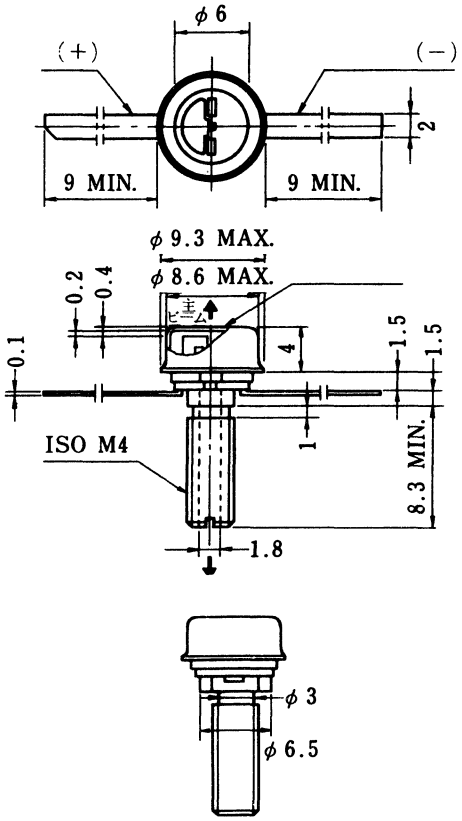

PD1014

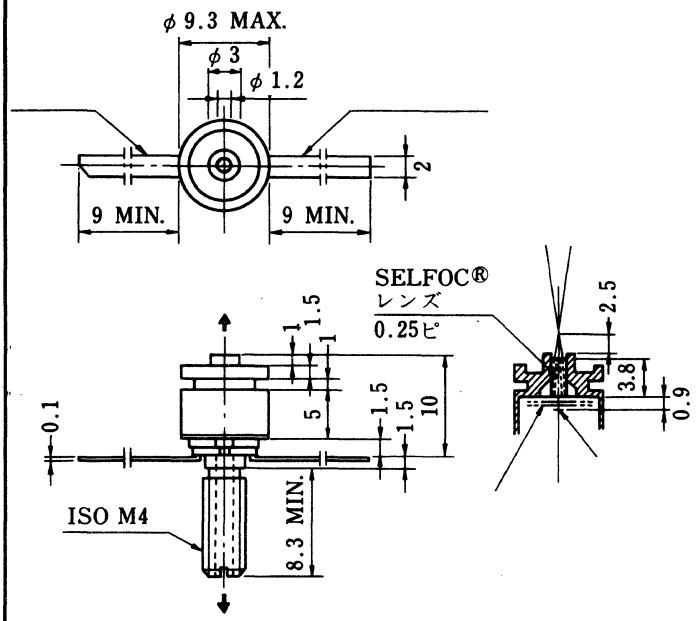

PD1015

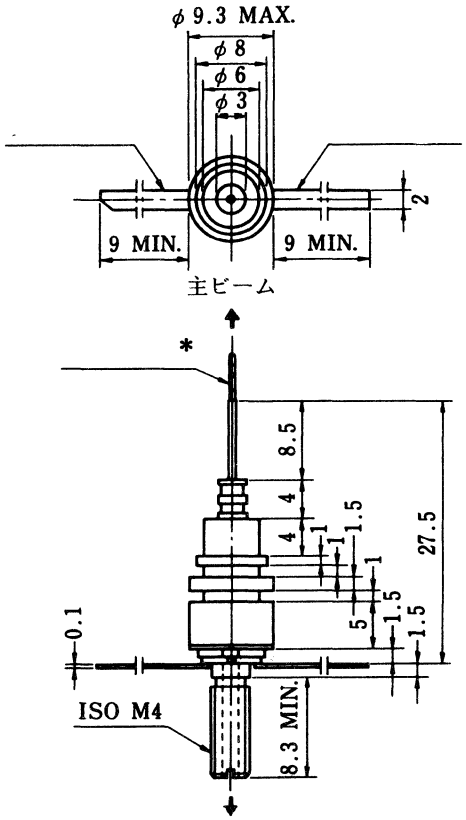

49. OUTLINE DRAWINGS

PD960

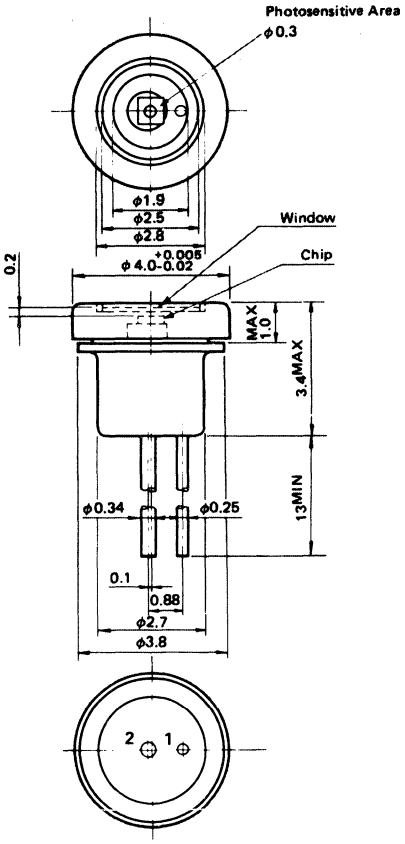

	ELECTRODE	BIAS
1	CATHODE	POSITIVE
2	ANODE	NEGATIVE

PD1017

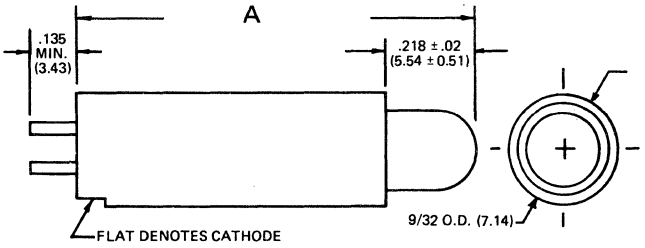

SUFFIX	IN.	MM
PD1017	.500	12.70
PD1017a	.600	15.24
PD1017b	.700	17.78
PD1017c	.800	20.32
PD1017d	.900	22.86
PD1017e	1.000	25.40

PD1018

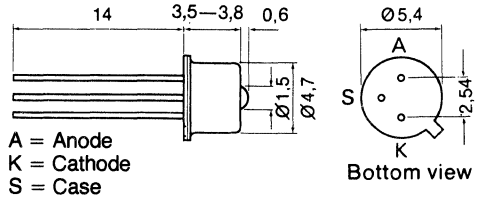

PD1020

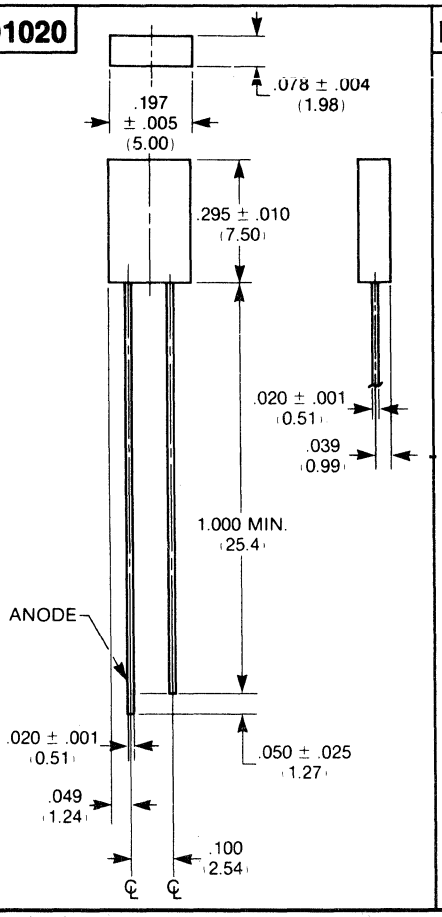

PD1021

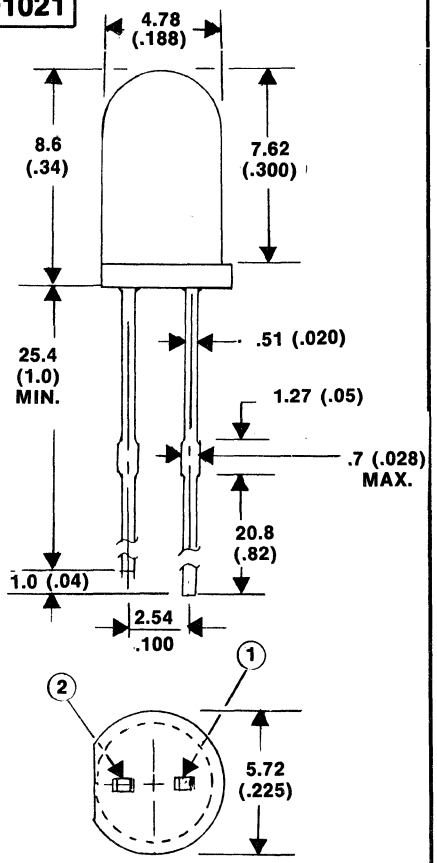

49. OUTLINE DRAWINGS

PD1022

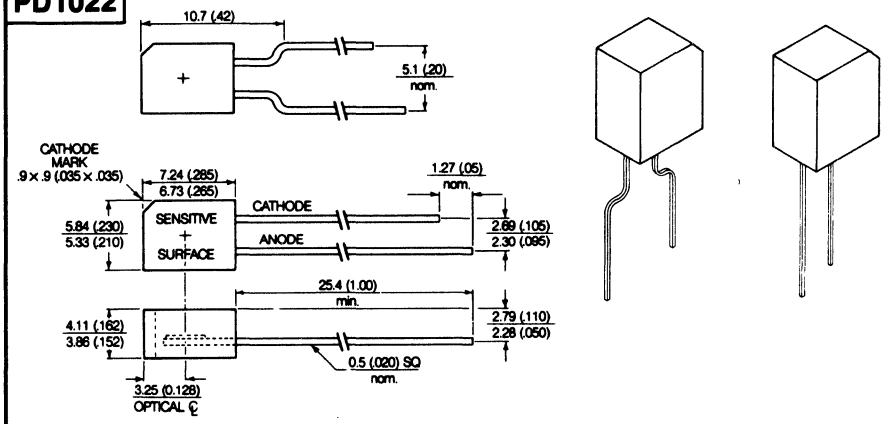

PD1023

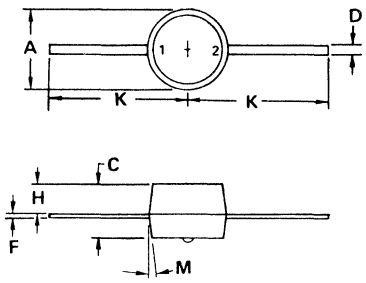

DIM	MILLIMETERS MIN	MILLIMETERS MAX	INCHES MIN	INCHES MAX
A	1.98	2.34	0.078	0.092
C	1.22	1.47	0.048	0.058
D	0.25	0.41	0.010	0.016
F	0.10	0.15	0.004	0.006
H	0.51	0.76	0.020	0.030
K	4.06	–	0.160	–
M	3°	7°	3°	7°

PD1024

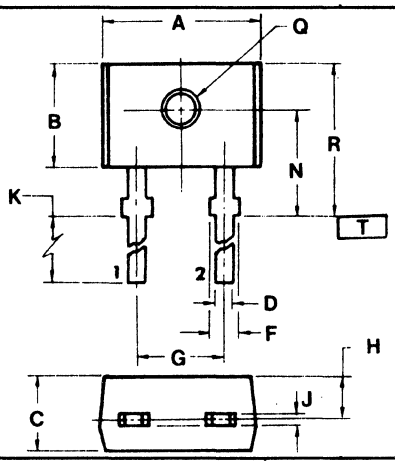

DIM	MILLIMETERS MIN	MILLIMETERS MAX	INCHES MIN	INCHES MAX
A	3.43	4.60	0.135	0.185
B	2.79	3.30	0.110	0.130
C	2.03	3.18	0.080	0.125
D	0.43	0.56	0.017	0.022
F	1.14	1.40	0.045	0.055
G	2.54 BSC		0.100 BSC	
H	1.52 BSC		0.060 BSC	
J	0.23	0.56	0.009	0.022
K	12.83	19.05	0.505	0.750
N	3.05	3.30	0.120	0.130
Q	0.76	1.52	0.030	0.060
R	3.81	4.60	0.150	0.185

PD1025

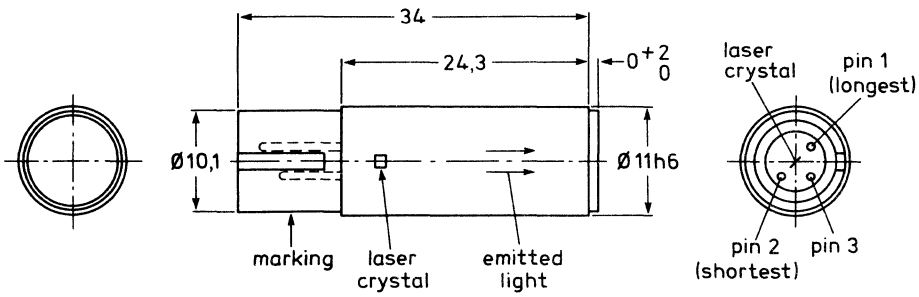

PD1027

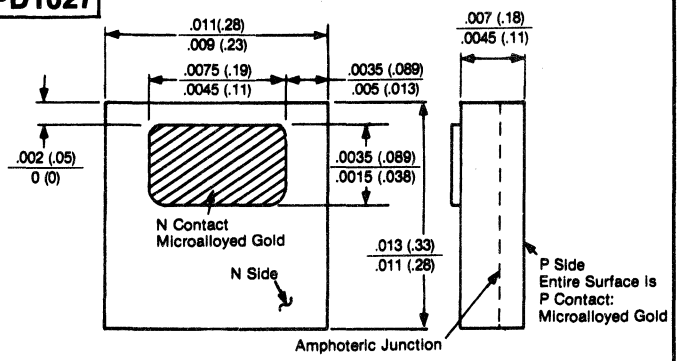

DIMENSIONS ARE IN INCHES (MILLIMETERS)

49. OUTLINE DRAWINGS

PD1029

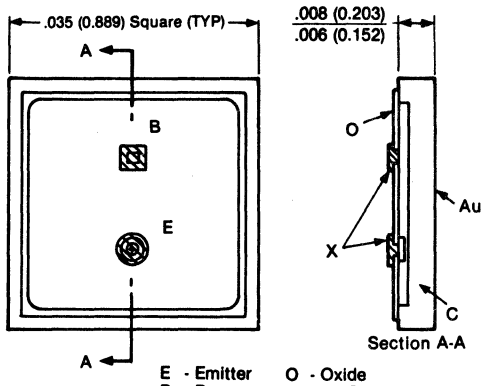

DIMENSIONS ARE IN INCHES (MILLIMETERS)

E - Emitter
B - Base
C - Collector
O - Oxide
X - Al. Contacts
Au- Gold

PD1030

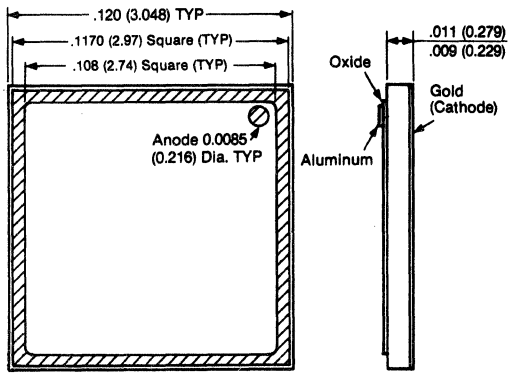

DIMENSIONS ARE IN INCHES (MILLIMETERS)

PD1031

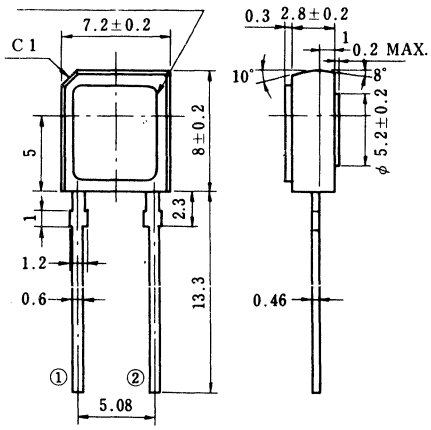

PD1032

in millimeters

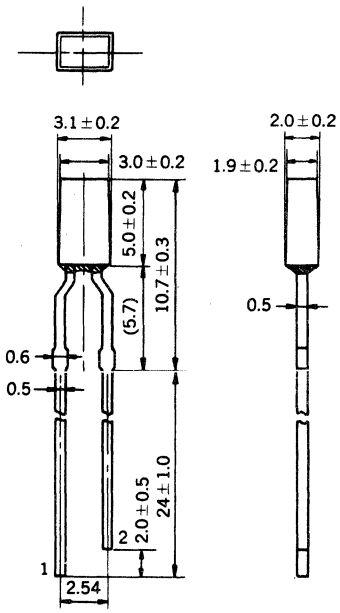

PD1033

in millimeters

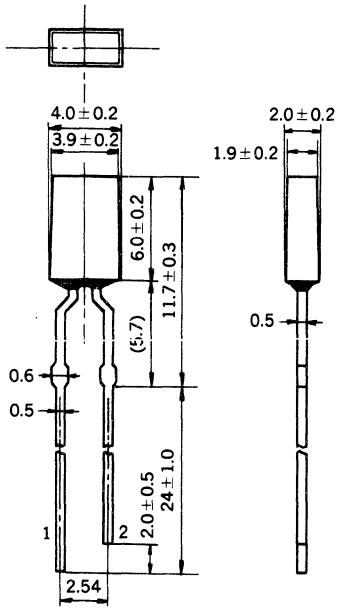

PD1034

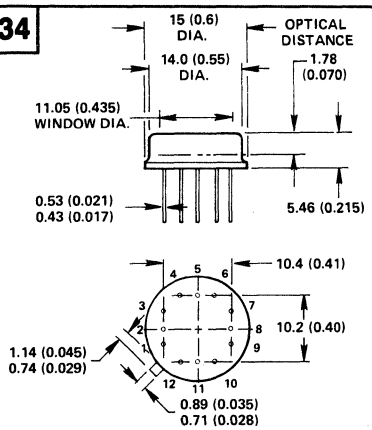

PD1035

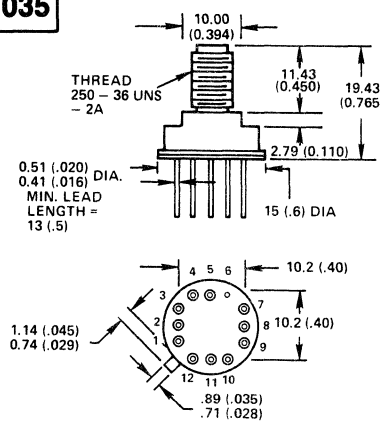

PD1039

ALL DIMENSIONS ARE NOMINAL

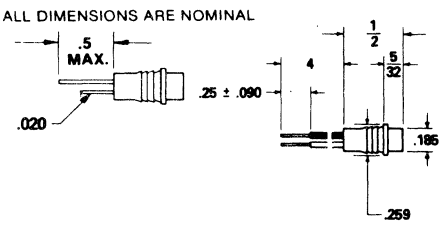

	Lead Termination	Ordering Info
PD1039	Shown	See Manufacturers' Device Numbering Keys (Section 50) under LWE.
PD1039a	22 AWG 4" color coded lead stripped to 1/4" are standard.	
PD1039b	Bi-Pins	

49. OUTLINE DRAWINGS

PD1036

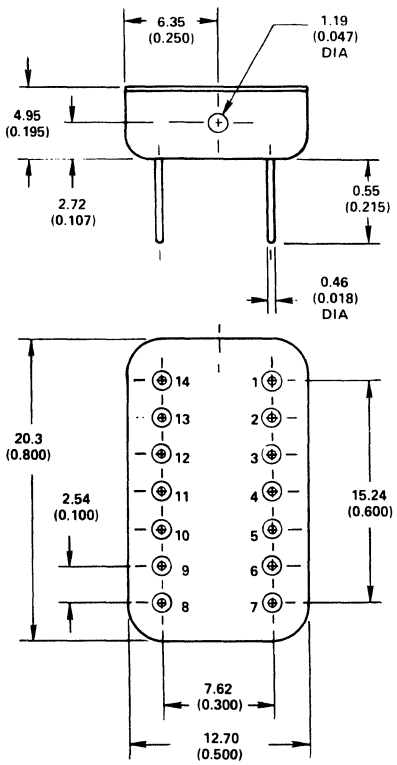

PD1036a

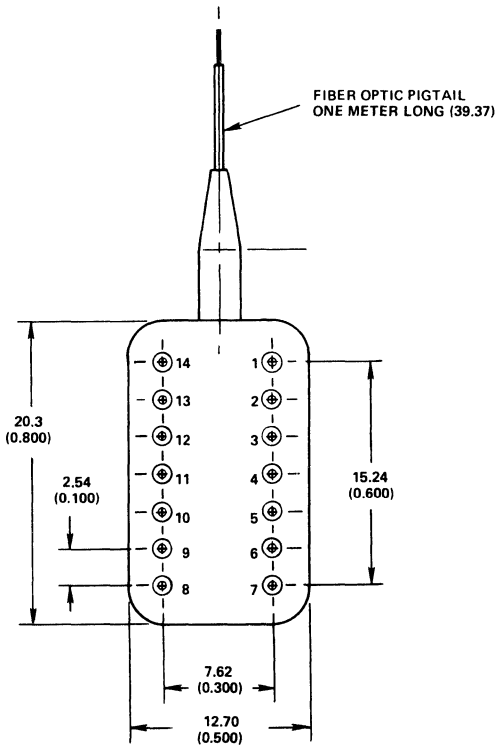

PD1037

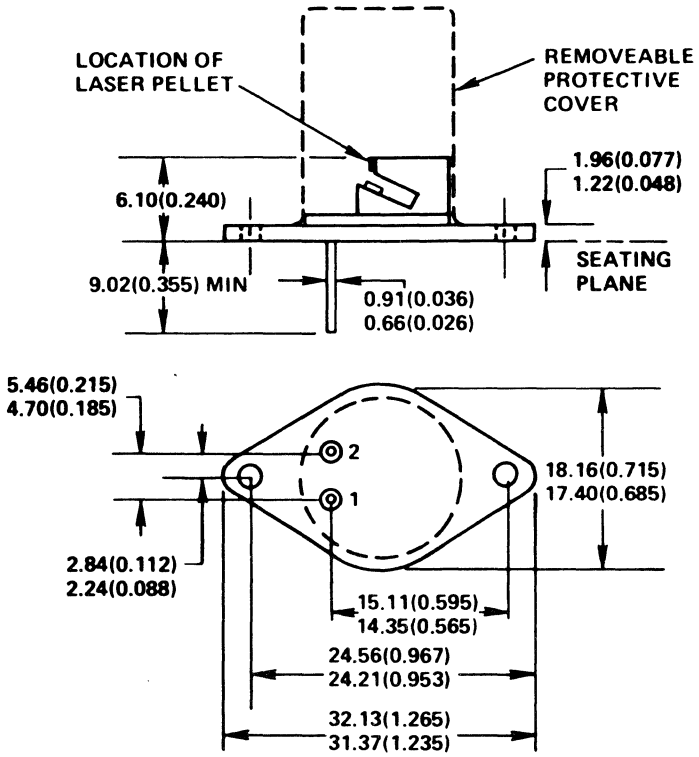

PD1038

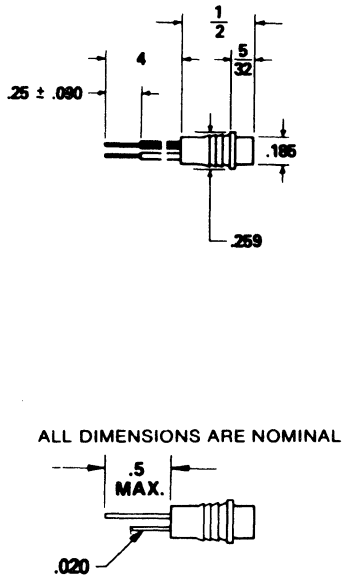

49. OUTLINE DRAWINGS

PD1040

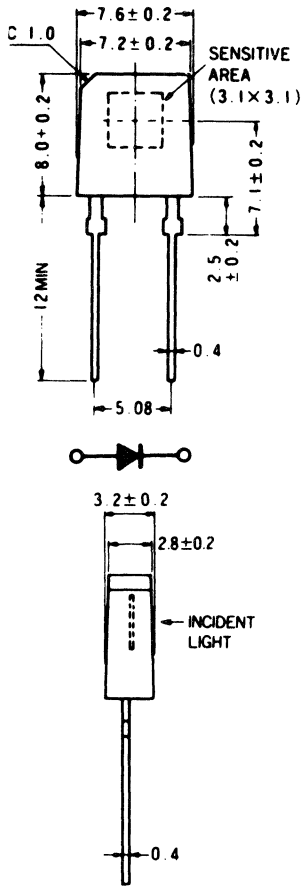

PD1041

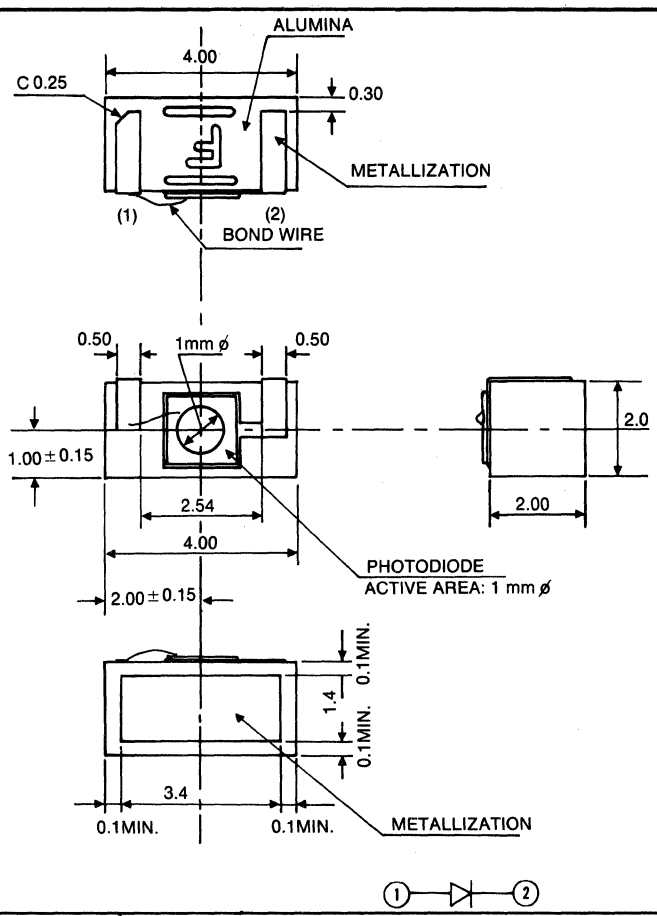

PD1042

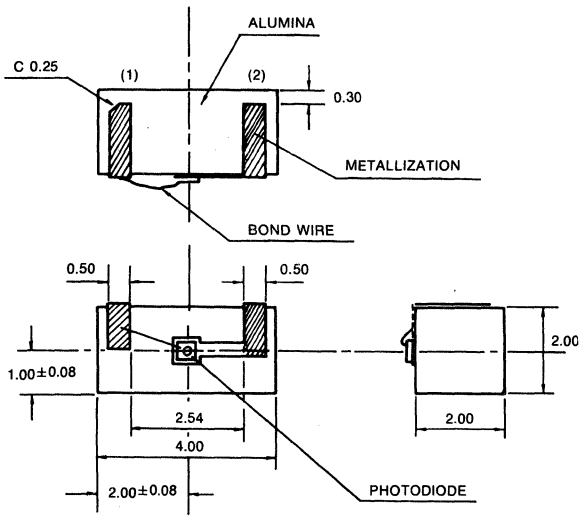

PD1043

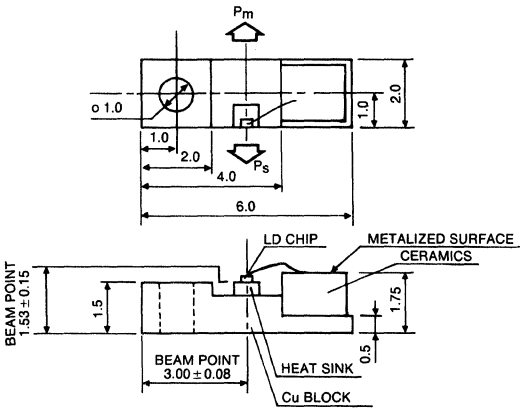

49. OUTLINE DRAWINGS

PD1044

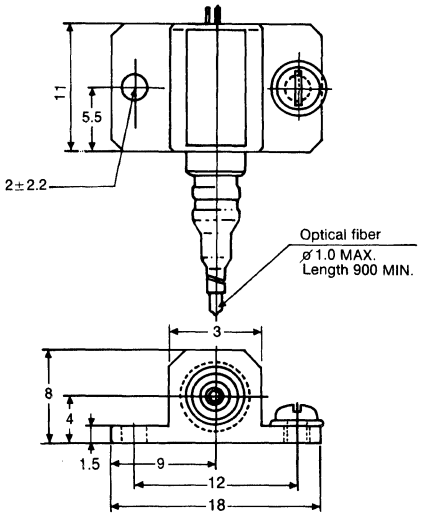

PD1045

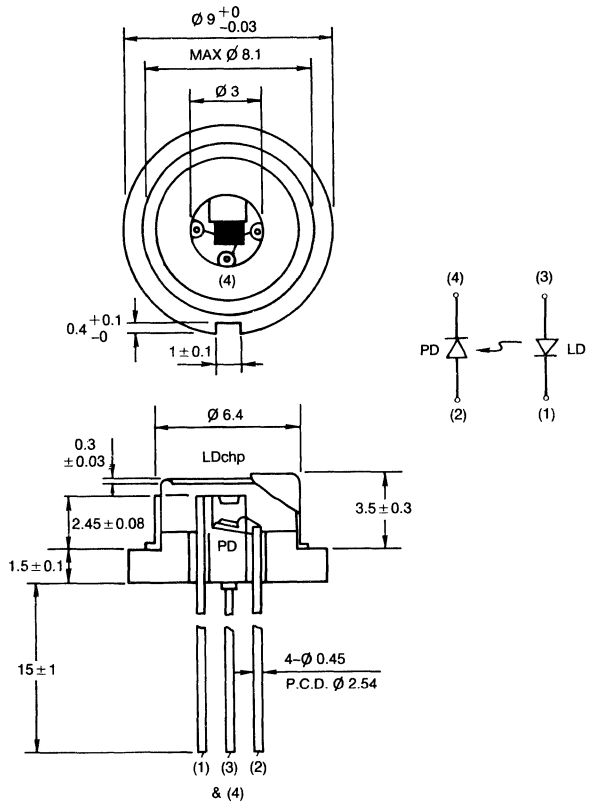

PD1046

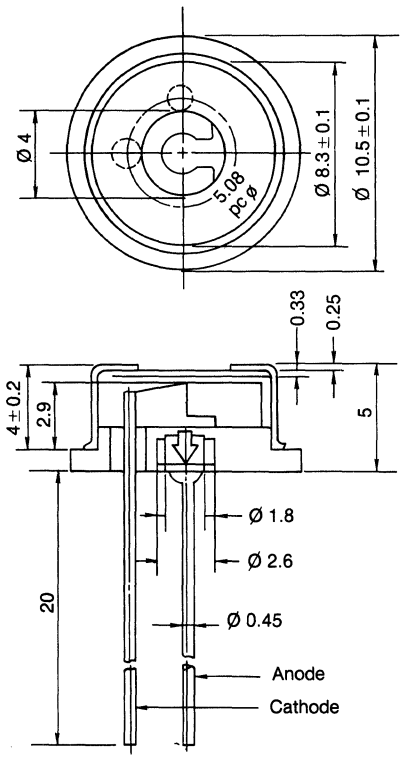

PD1047

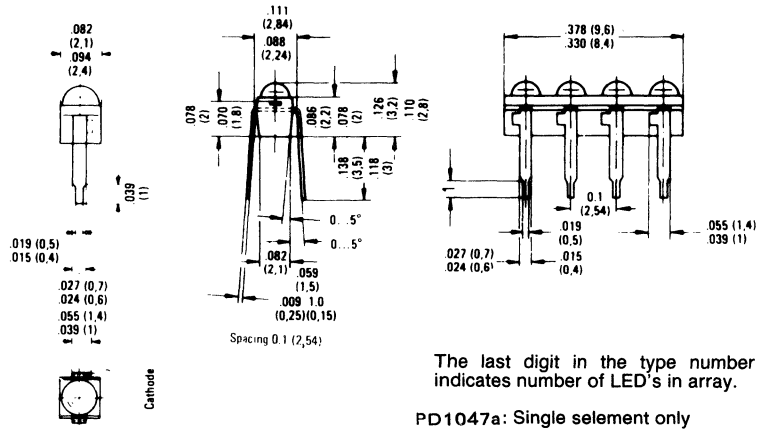

The last digit in the type number indicates number of LED's in array.

PD1047a: Single selement only

49. OUTLINE DRAWINGS

PD1048

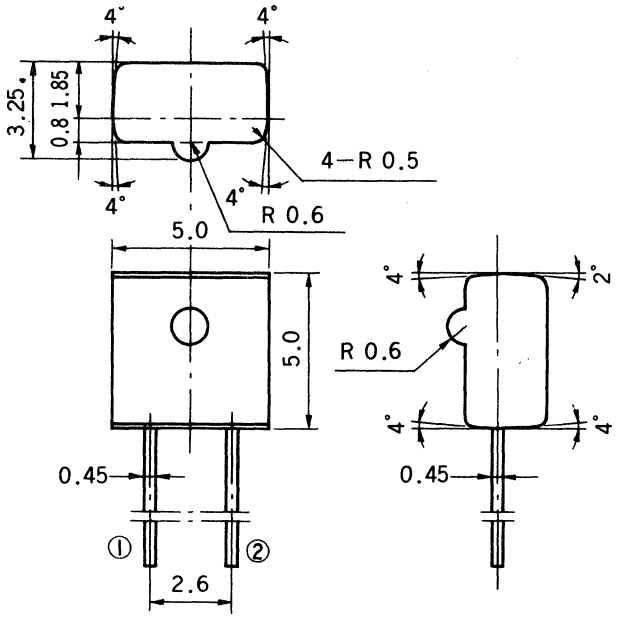

PD1050

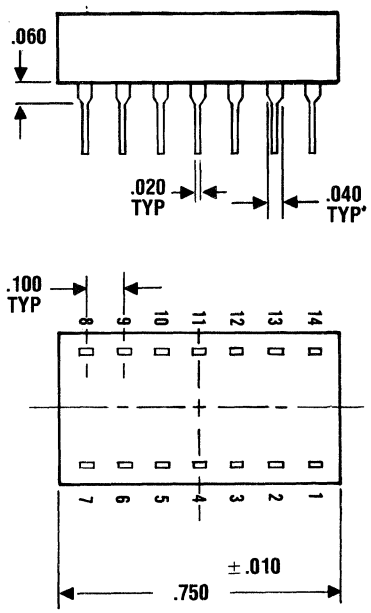

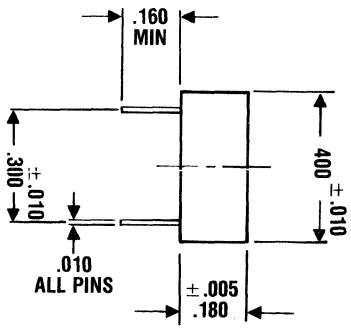

PD1051

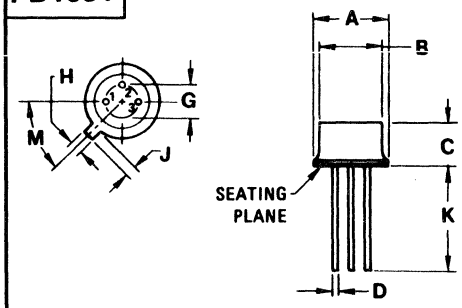

	A	B	C	D	G	H	J	K	M
PD1051	.209 .230	.183 .185	.123 .129	.016 .019	.100 .BSC	.039 .046	.033 .048	.500	45° BSC
PD1051a	.209 .212	.183 .185	.135 .142	.016 .019	.100 BSC	.036 .046	.033 .048	.500	45° BSC

NOTES:

1. PIN 3 INTERNALLY CONNECTED TO CASE.
2. LEAD POSITIONAL TOLERANCE AT SEATING PLANE:
   ⌖ Ø 0.36 (0.014) Ⓜ T A Ⓜ H Ⓜ
3. DIMENSIONS A AND H ARE DATUMS AND T IS A DATUM PLANE.

DIM	MILLIMETERS MIN	MILLIMETERS MAX	INCHES MIN	INCHES MAX
A	5.31	5.84	0.209	0.230
B	4.65	4.70	0.183	0.185
C	3.12	3.28	0.123	0.129
D	0.41	0.48	0.016	0.019
G	2.54 BSC		0.100 BSC	
H	0.99	1.17	0.039	0.046
J	0.84	1.22	0.033	0.048
K	12.70	–	0.500	–
M	45° BSC		45° BSC	

PD1053

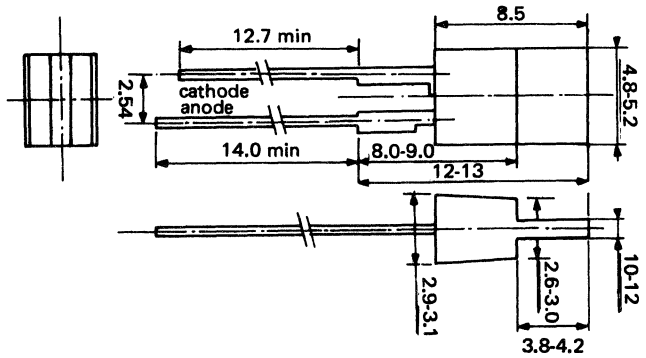

49. OUTLINE DRAWINGS

PD1054

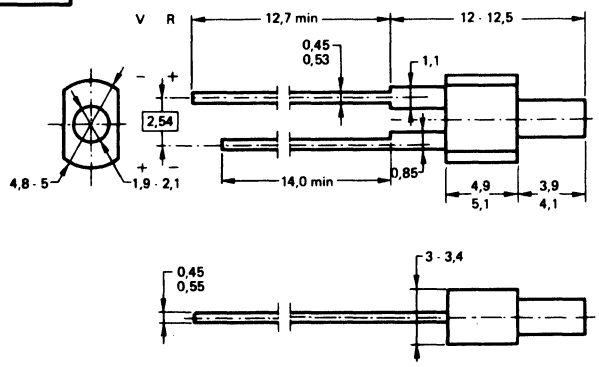

PD1055

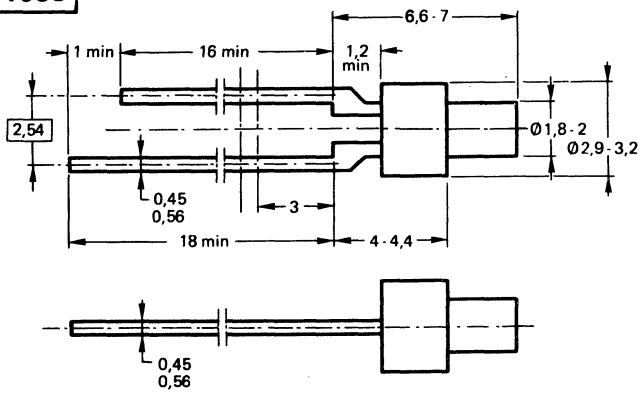

PD1056

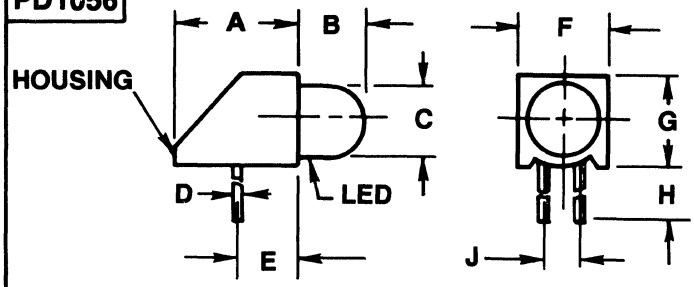

	A	B	C	D	E	F	G	H	J
PD1056	.365	.180	T1.75			.250	.250		.100
PD1056a	.340 .360	.170 .190	.190 .210	.015 .030	.197 .217	.255 MAX	.240 .260	.400 MIN	.090 .110

PD1057

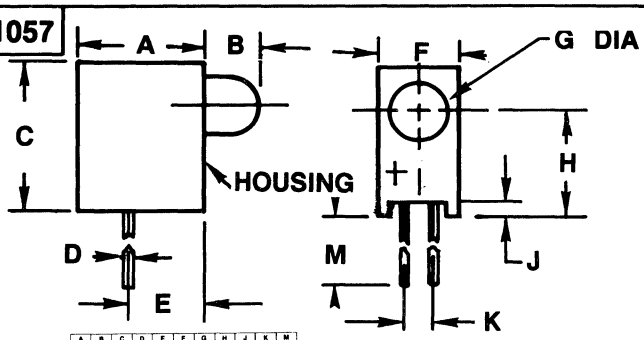

	A	B	C	D	E	F	G	H	J	K	M
PD1057	.250	.095	.290			.178	T1		N/A	.090	
PD1057a	.440 .480	.170 .190	.515 .535	.015 .030	.290 .310	.300 MAX	.190 .210	.365 .385	.040 .060	.090 .110	.135 MIN
PD1057b	.240 .260	.090 .110	.270 .290	.018 SQ	.185 .205	.180 MAX	.105 .125	.195 .215	.020 TYP	.090 .110	.400 MIN
PD1057c	.240 .260	.290 .095	.290 MAX	.018 SQ	.185	.180 MAX	.125 .145	.190 .210		.100 NOM	.750 MIN
PD1057d	.240 .260	.290 .095	.290 MAX	.018 SQ	.185	.180 MAX	.125 .145	.190 .210		.100 NOM	.135 MIN

PD1058

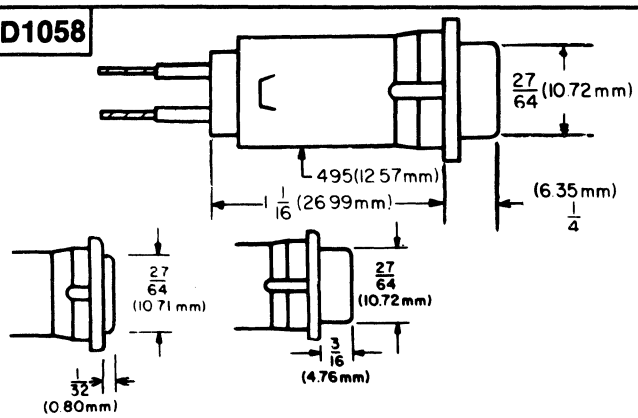

PD1059

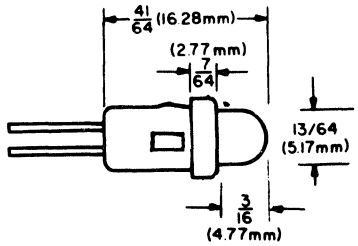

PD1060

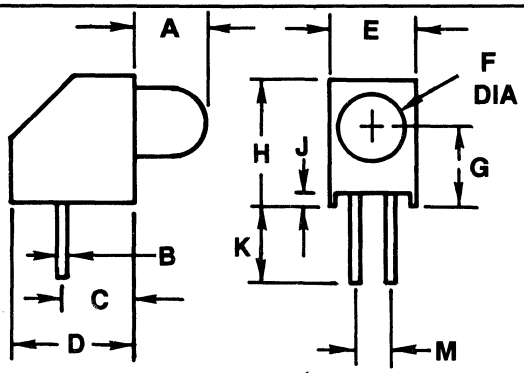

	A	B	C	D	E	F	G	H	J	K	M
PD1060	.177 .147	.015 .030	.190 .210	.345 .365	.255 MAX	.190 .210	.200 TYP	.315 .335	.020	.135 MIN	.090 .110

PD1061

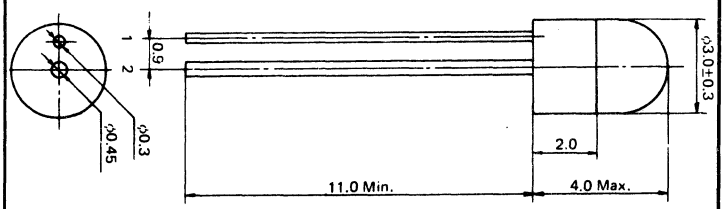

1: Anode
2: Cathode

49. OUTLINE DRAWINGS

PD1062

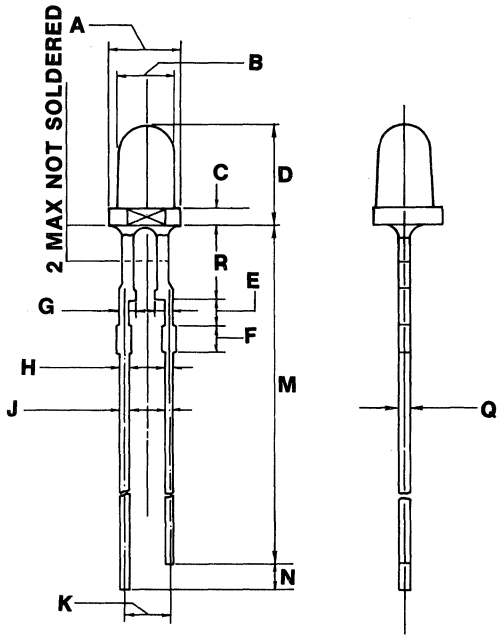

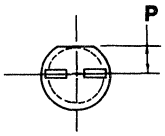

1 Anode
2 Cathode

	A	B	C	D	E	F	G	H	J	K	M	N	P	Q	R
PD1062	.134 .150	.110 .126	.039	.209 .224	.057	.059	.043 MAX	.031 MAX	.020 .027	.100	1.003 1.083	.059	.063	.020 .028	.150 .173
PD1062a	.134 .150	.110 .126	.039	.209 .224		.189 .213		.043 MAX	.026 .027	.100	1.32 1.40	.059	.063	.020 .028	.189 .213

PD1063

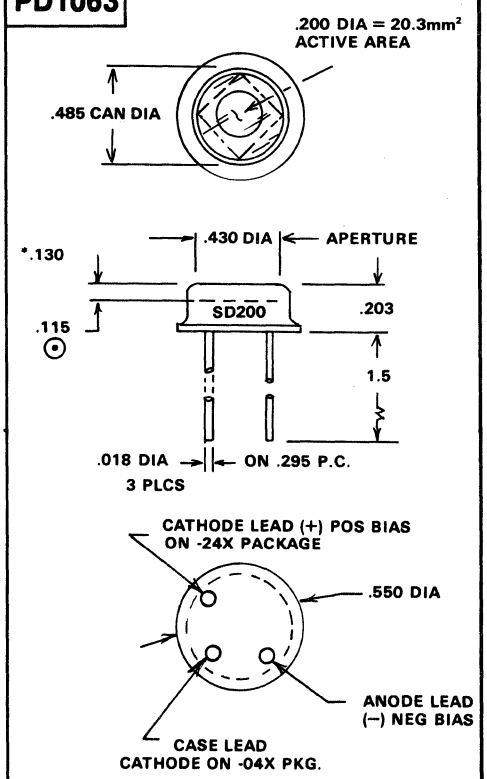

PD1065

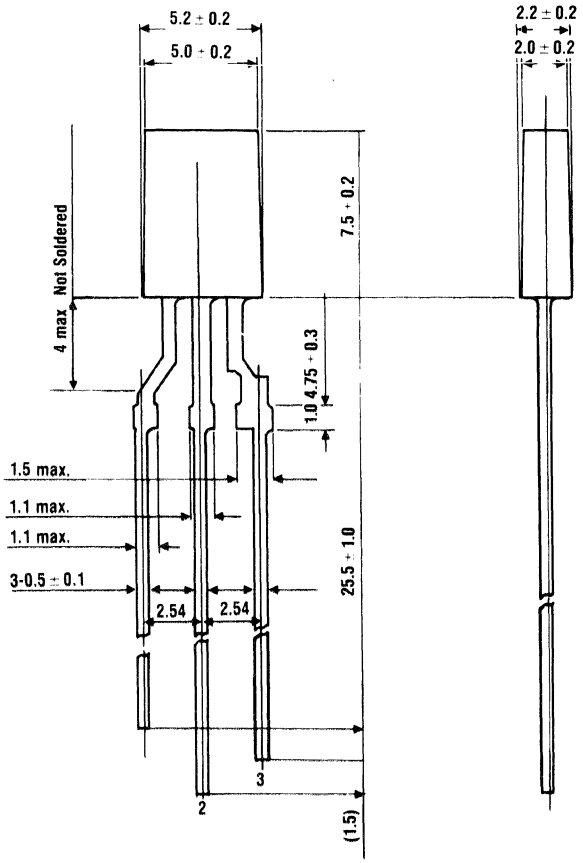

1: Anode (G)
2: Cathode
3: Anode (R)

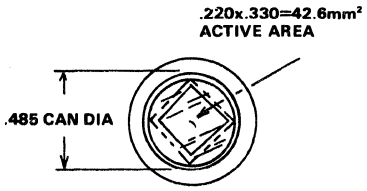

49. OUTLINE DRAWINGS

PD1066

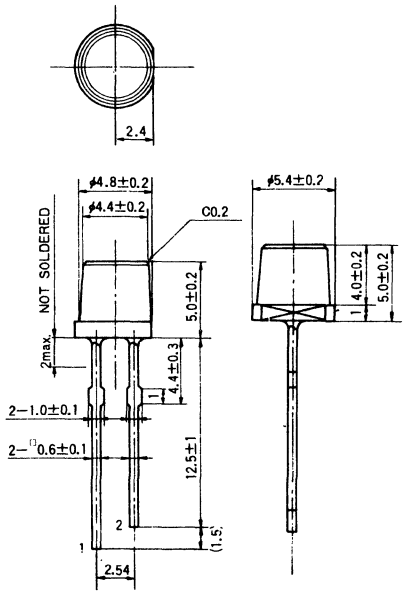

PD1068

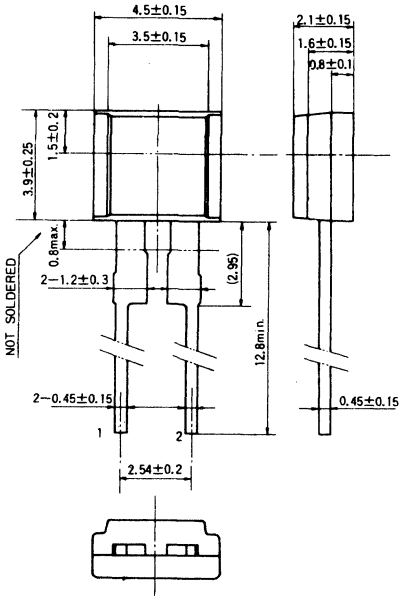

PD1069

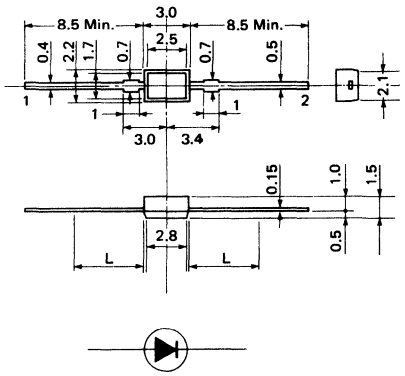

PD1070

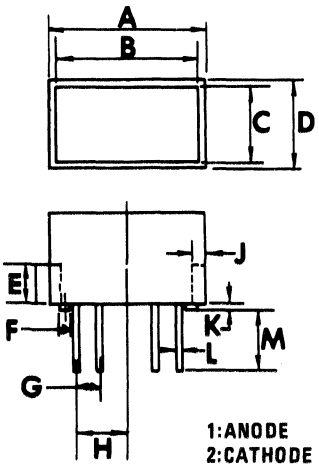

	A	B	C	D	E	F	G	H	J	K	L	M
PD1070	.382 .406	.344 .364	.266 .285	.303 .327	.098	.028	.100		.028	.020	.020	.138 MIN

PD1071

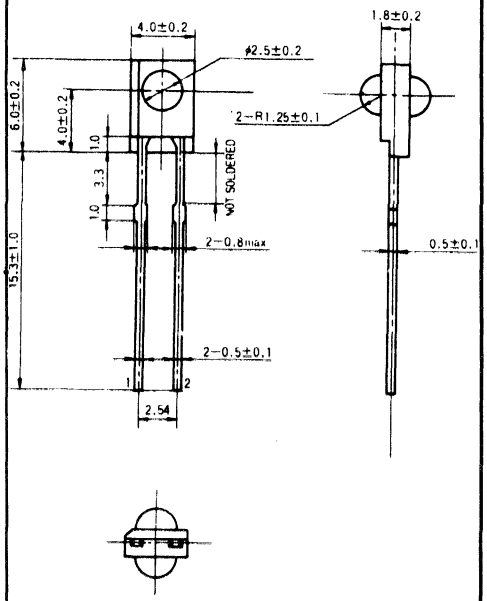

49. OUTLINE DRAWINGS

PD1072

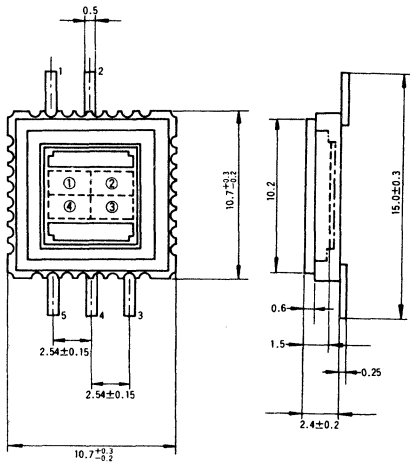

1 : Anode ①
2 : Anode ②
3 : Common Cathode
4 : Anode ③
5 : Anode ④

PD1073

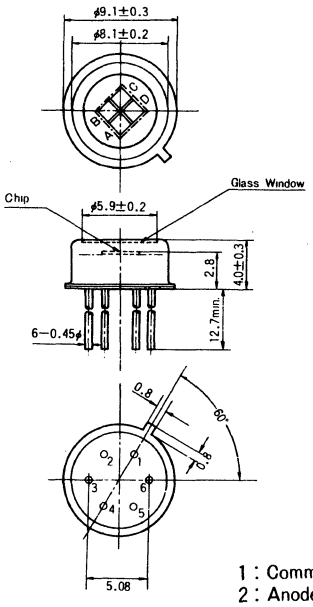

1 : Common
2 : Anode Ⓐ
3 : Anode Ⓑ
4 : NC
5 : Anode Ⓒ
6 : Anode Ⓓ

PD1074

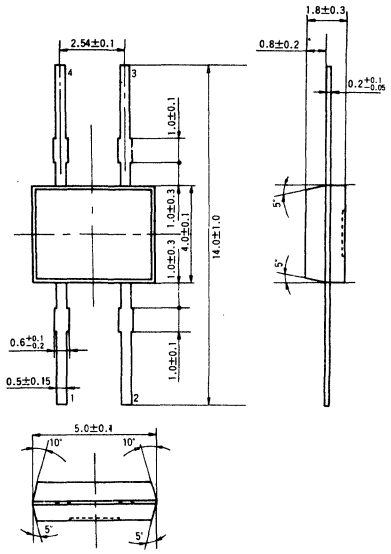

1 : Anode A
2 : Common Cathode
3 : Anode B
4 : Common Cathode

PD1075

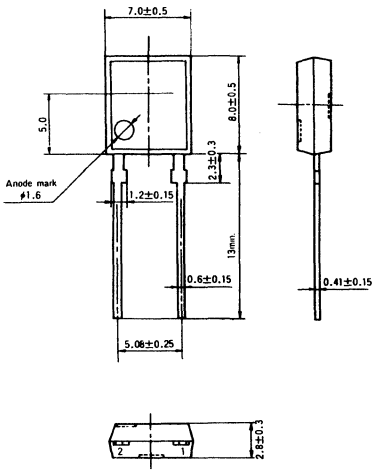

1 : Cathode
2 : Anode

PD1076

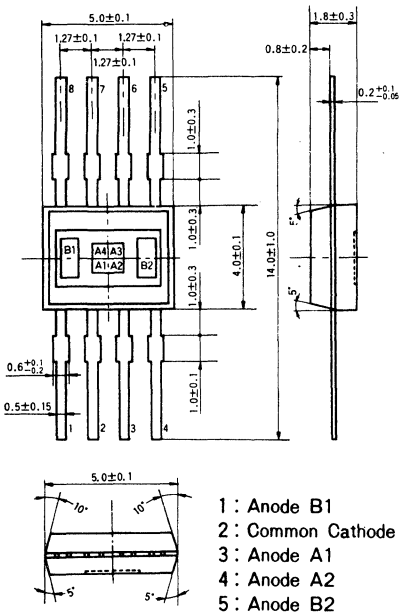

1 : Anode B1
2 : Common Cathode
3 : Anode A1
4 : Anode A2
5 : Anode B2
6 : Common Cathode
7 : Anode A3
8 : Anode A4

PD1077

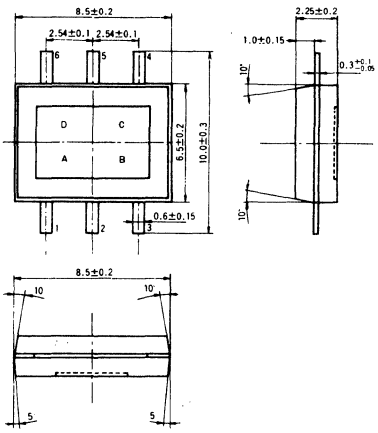

1 : Anode A
2 : Common Cathode
3 : Anode B
4 : Anode C
5 : Common Cathode
6 : Anode D

49. OUTLINE DRAWINGS

PD1078

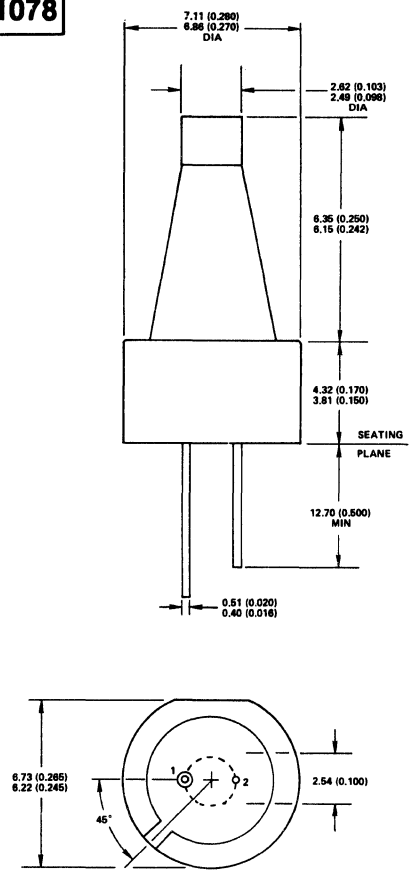

PD1079

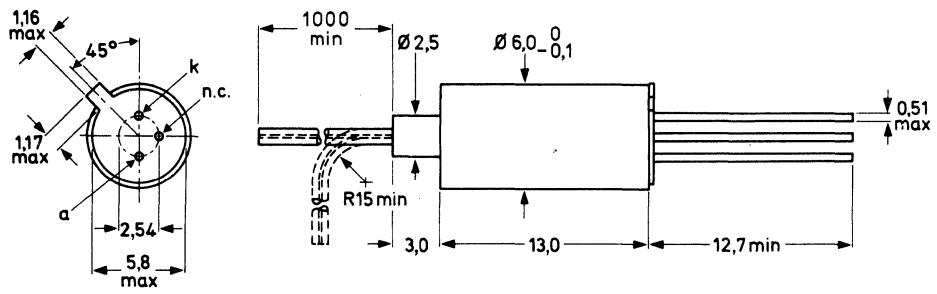

PD1080

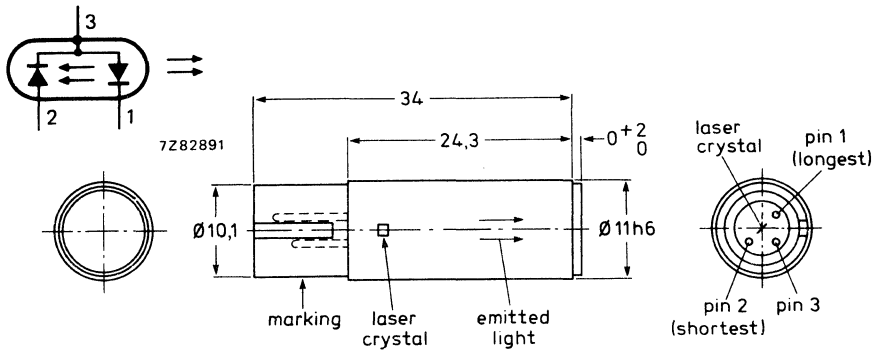

PD1081

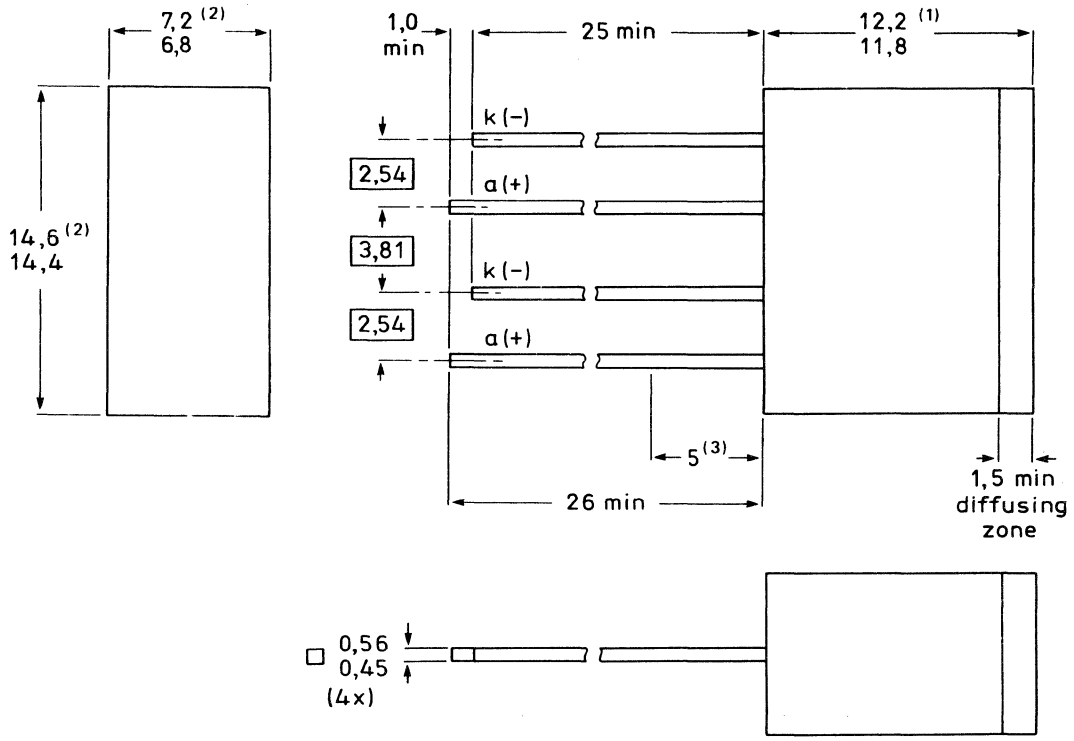

49. OUTLINE DRAWINGS

PD1082

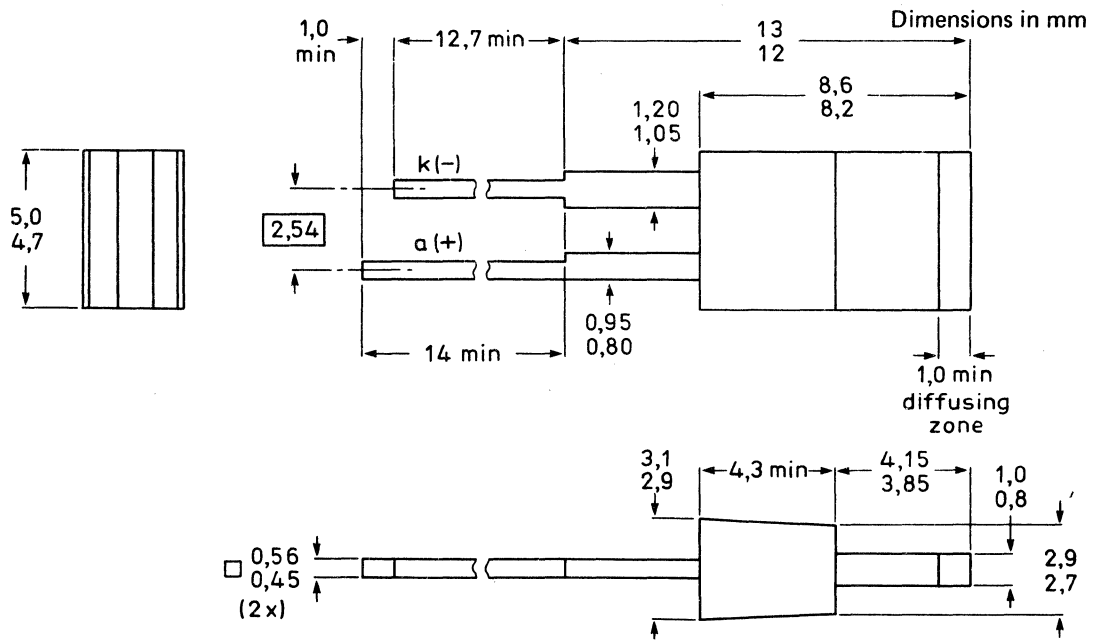

PD1083

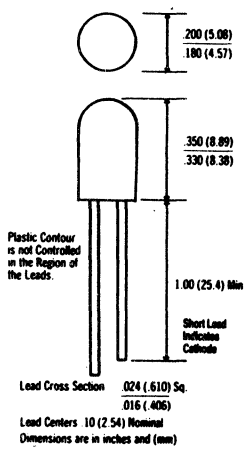

PD1084

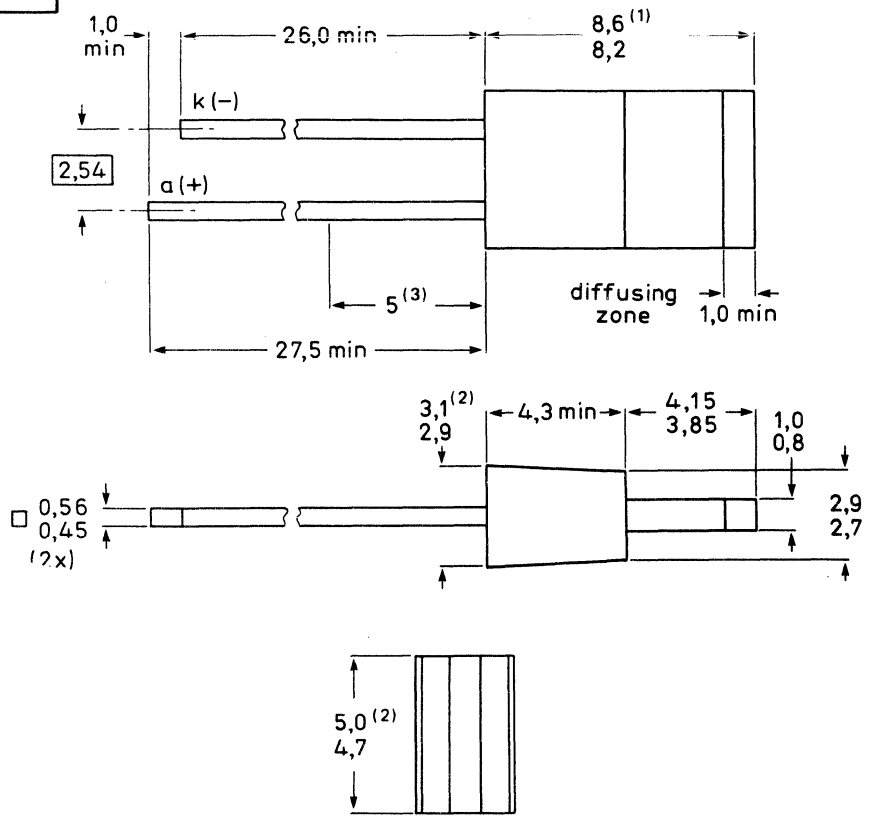

49. OUTLINE DRAWINGS

PD1085

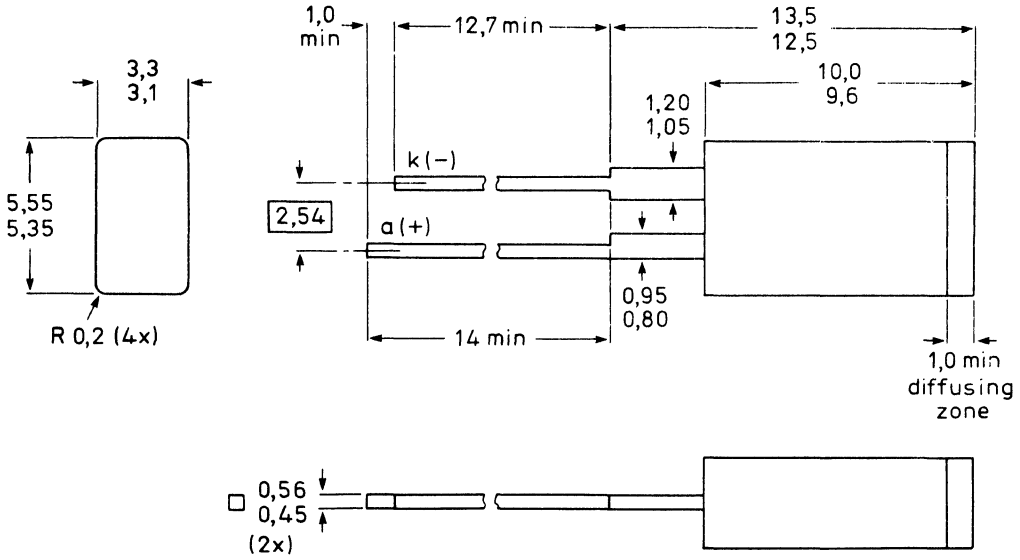

PD1086

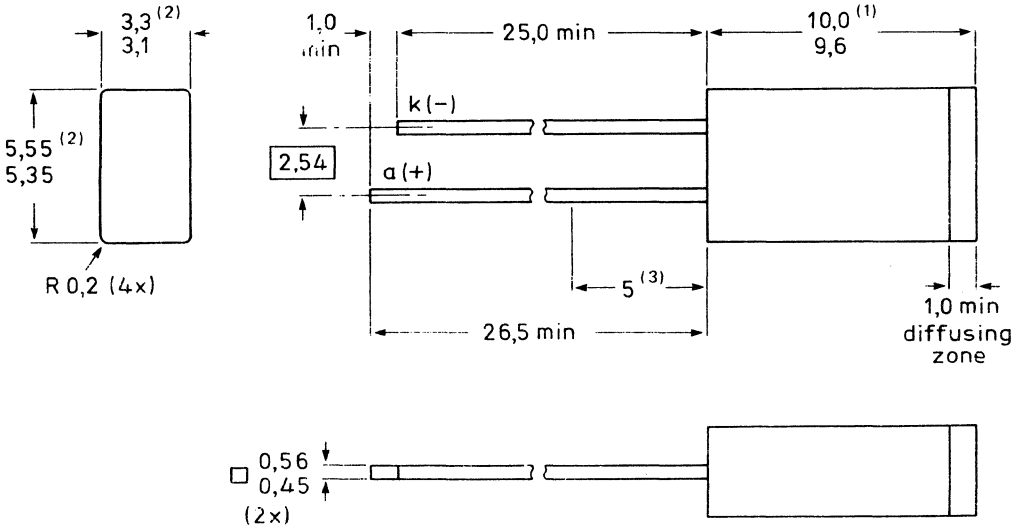

49. OUTLINE DRAWINGS

PD1087

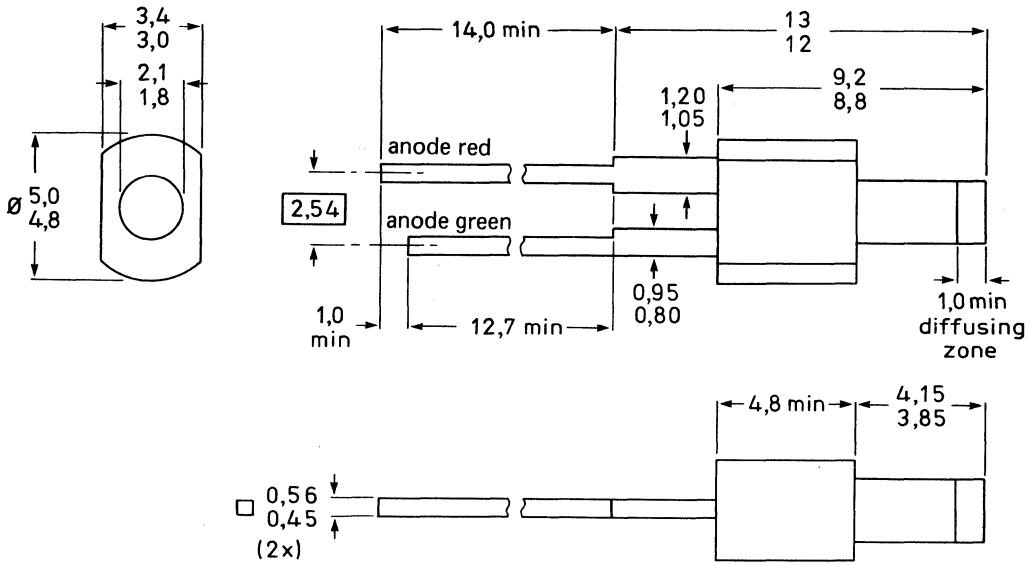

PD1088

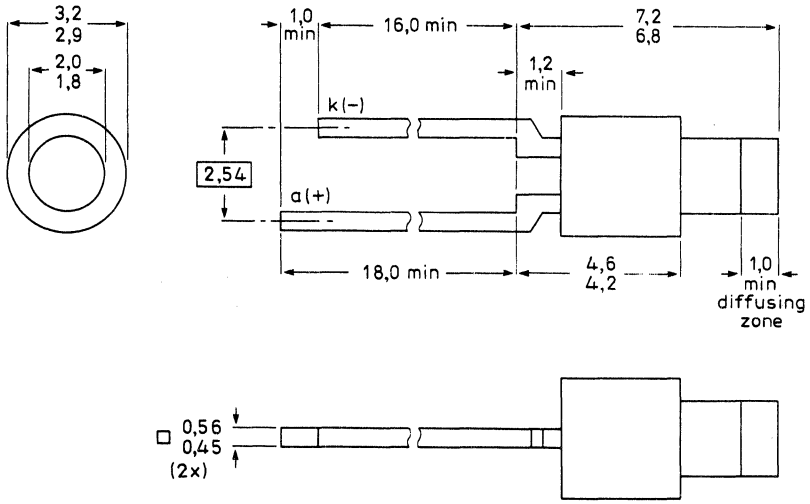

PD1016

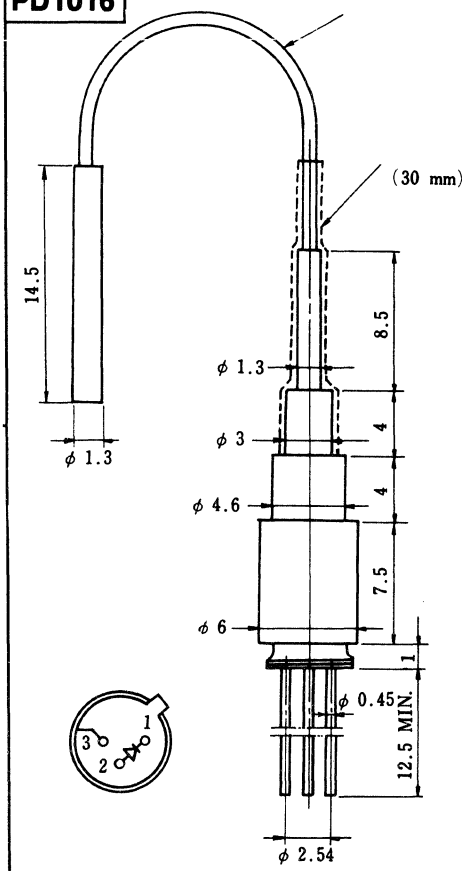

49. OUTLINE DRAWINGS

PD1089

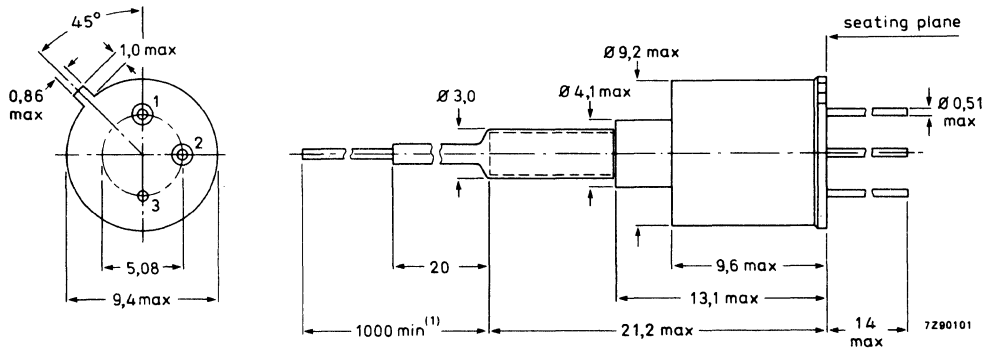

PD1090

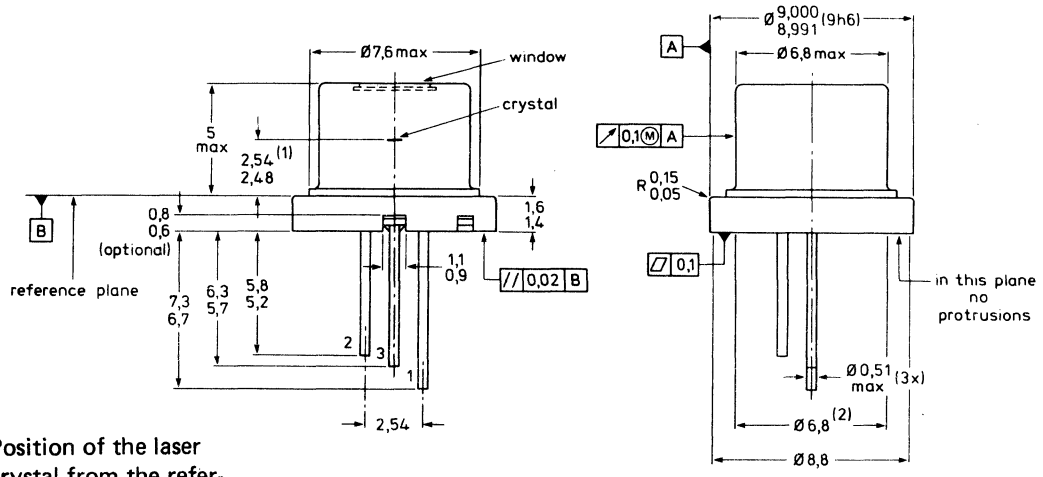

(1) Position of the laser crystal from the reference plane.

(2) Within the plane of 6,8 diameter, protrusions and irregularities are permitted.

(3) Positional accuracy of the laser stripe with respect to the flange diameter.

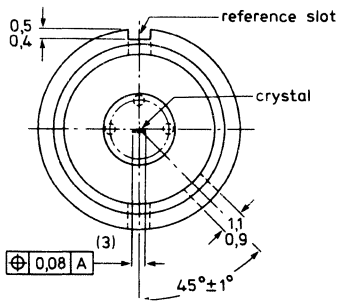

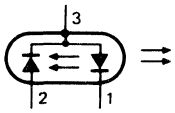

PD1091

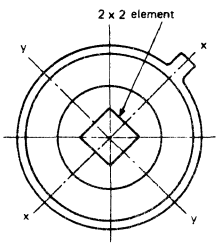

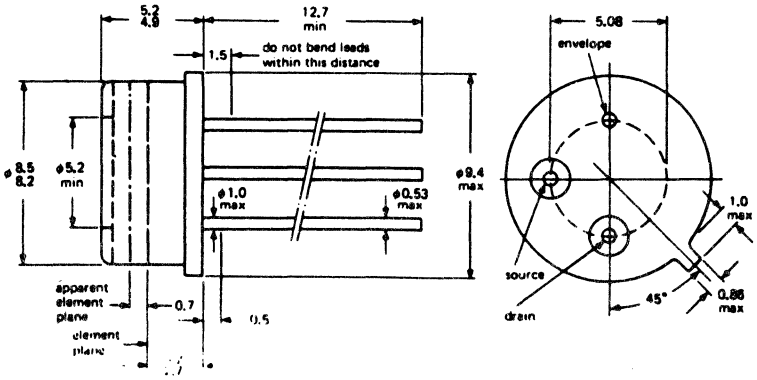

49. OUTLINE DRAWINGS

PD1092

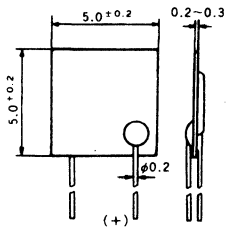

unit : mm

PD1093

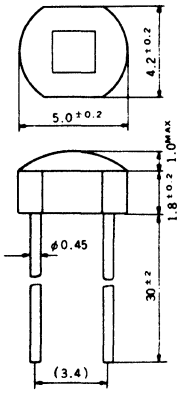

PD1094

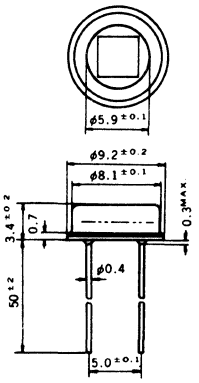

PD1095

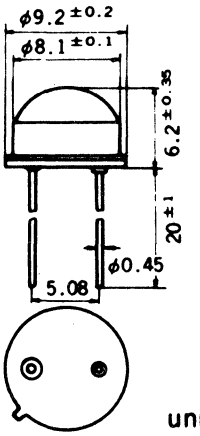

unit : mm

PD1096

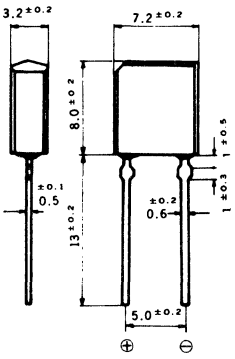

unit : mm

PD1097

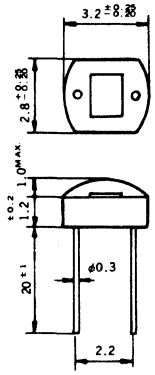

unit : mm

PD1098

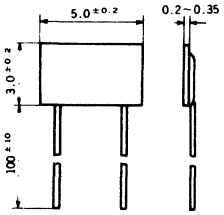

	A	B	C
PD1098	4.8 / 5.2	2.8 / 3.2	90 / 110
PD1098a	9.8 / 10.2	19.8 / 20.2	90 / 110

PD1099

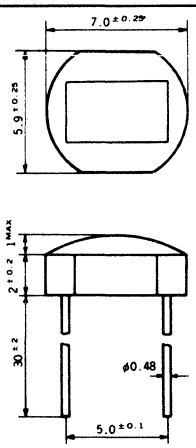

PD1108

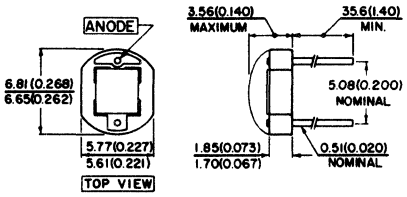

PD1109

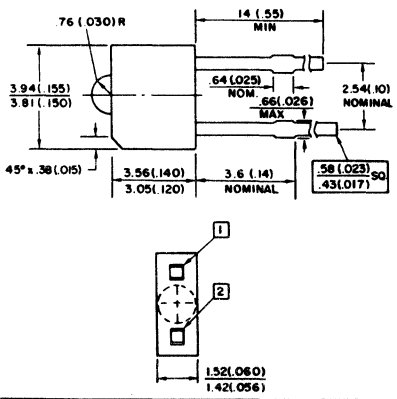

PD1110

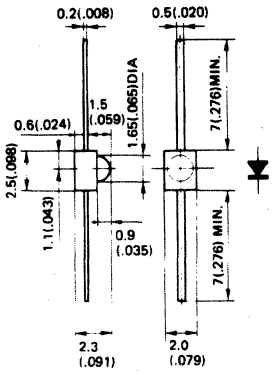

PD1116

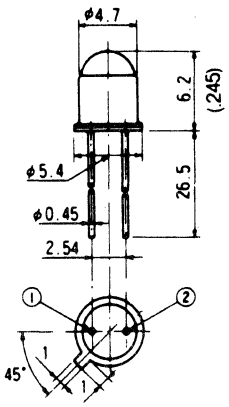

49. OUTLINE DRAWINGS

PD1111

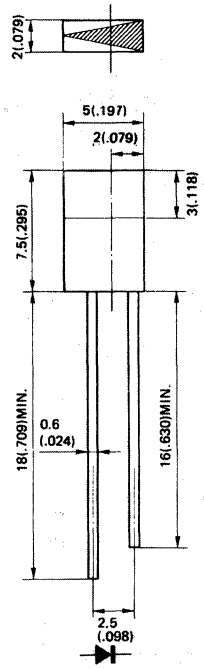

PD1112

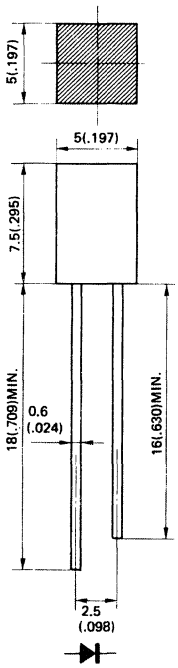

PD1113

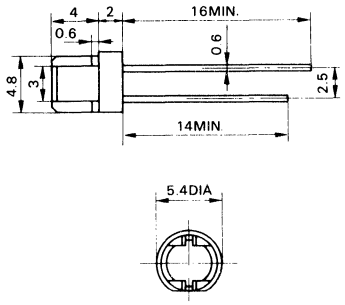

PD1119

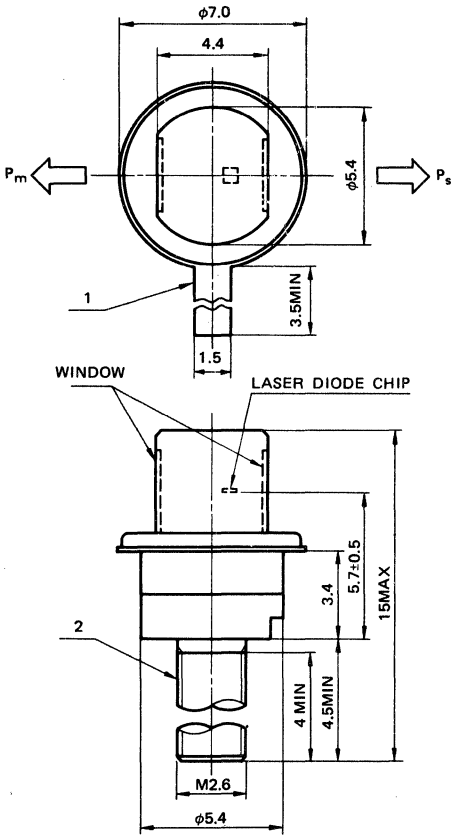

Ps: SIGNAL BEAM
Pm: MONITOR BEAM

PD1117

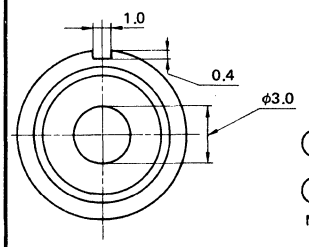

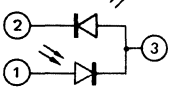

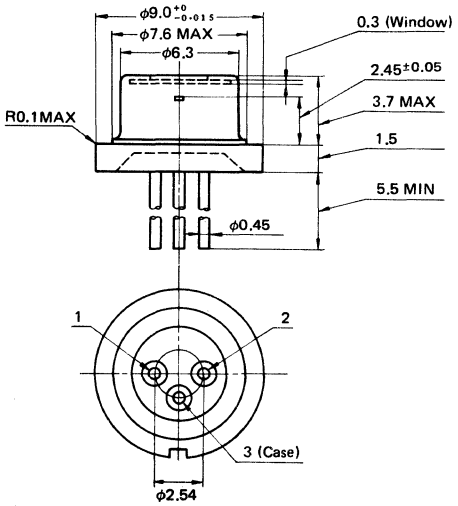

PD1118

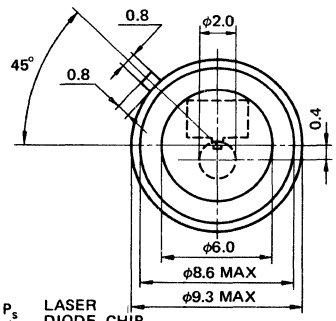

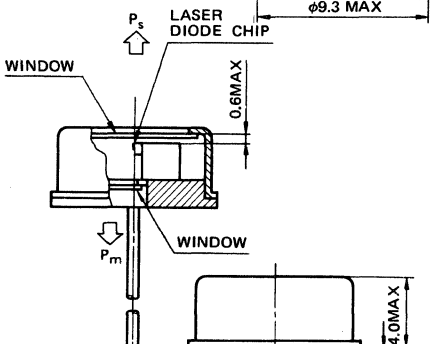

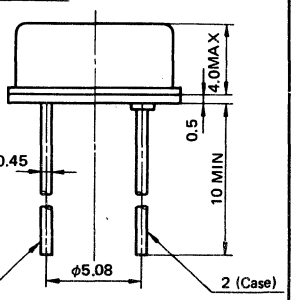

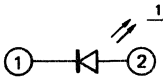

Ps: SIGNAL BEAM
Pm: MONITOR BEAM

49. OUTLINE DRAWINGS

PD1120

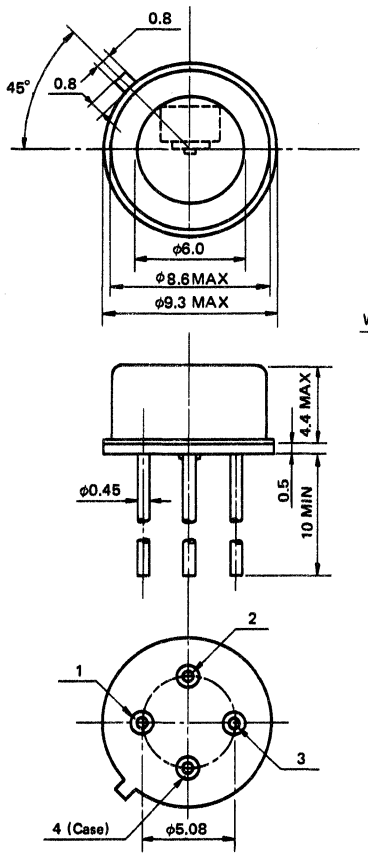

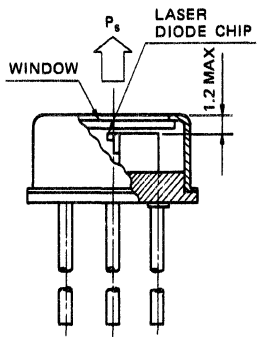

P_s: SIGNAL BEAM

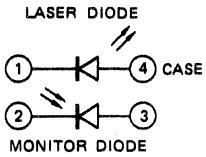

PD1121

PACKAGE (3)

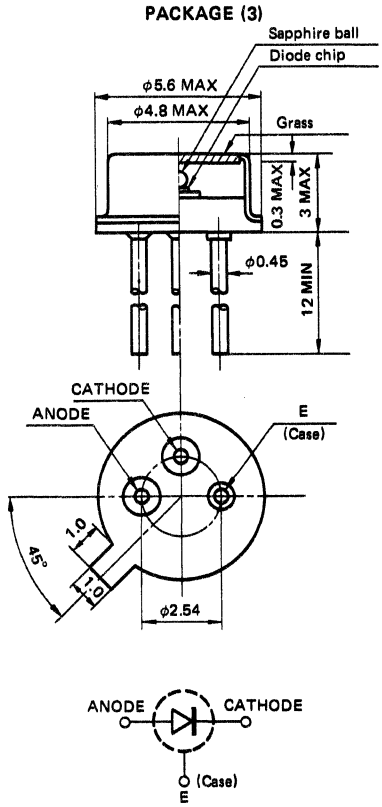

PD1122

PACKAGE (4)

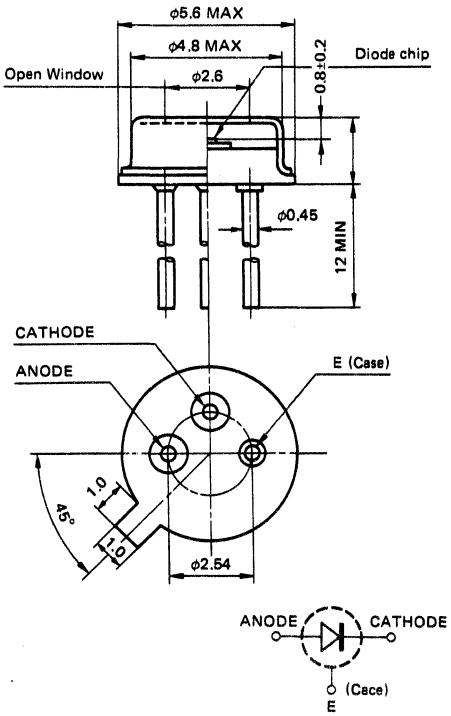

PD1135

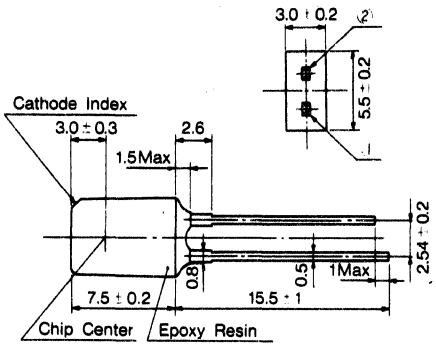

PD1136

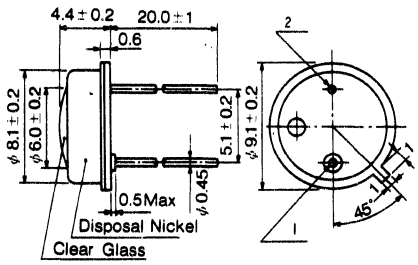

PD1137

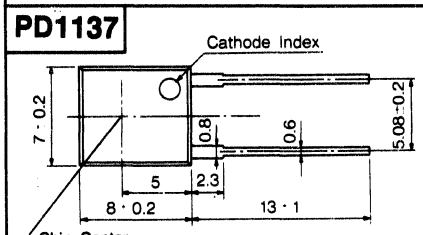

PD1137

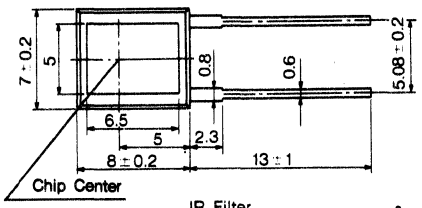

PD1137a

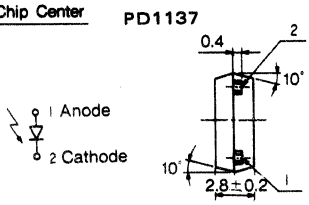

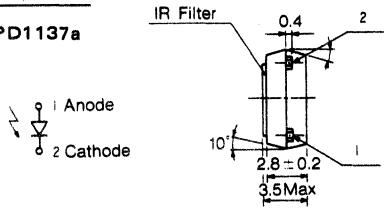

49. OUTLINE DRAWINGS

PD1138

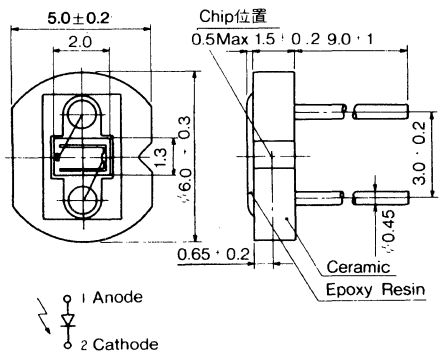

PD1139

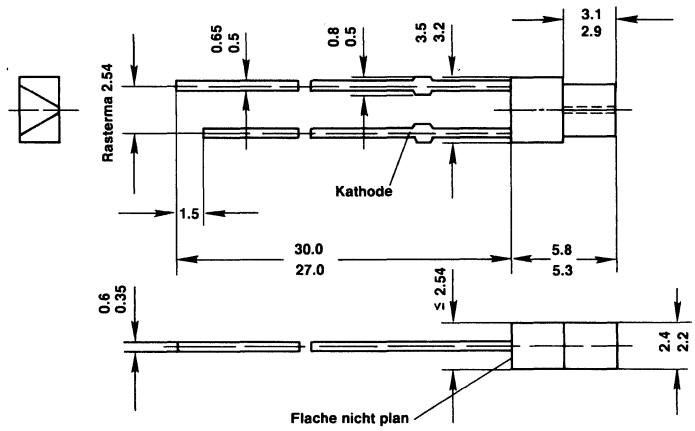

PD1140

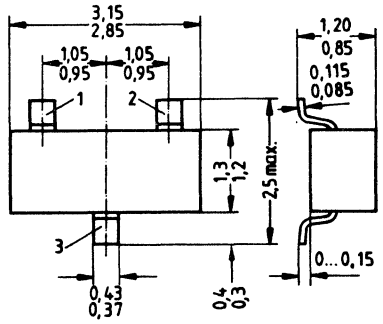

Approx. weight 0.01 g

PD1141

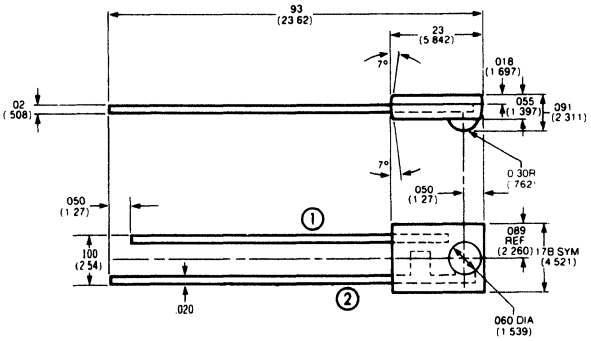

PD1142

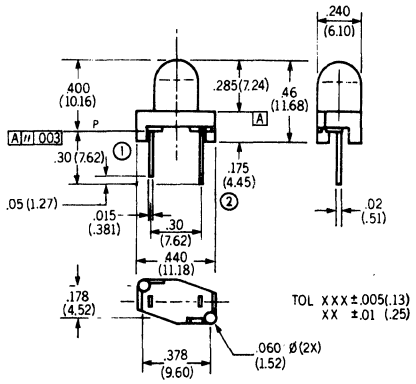

PD1143

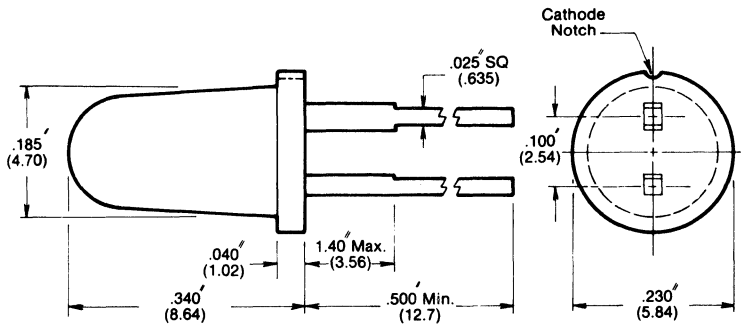

PD1144

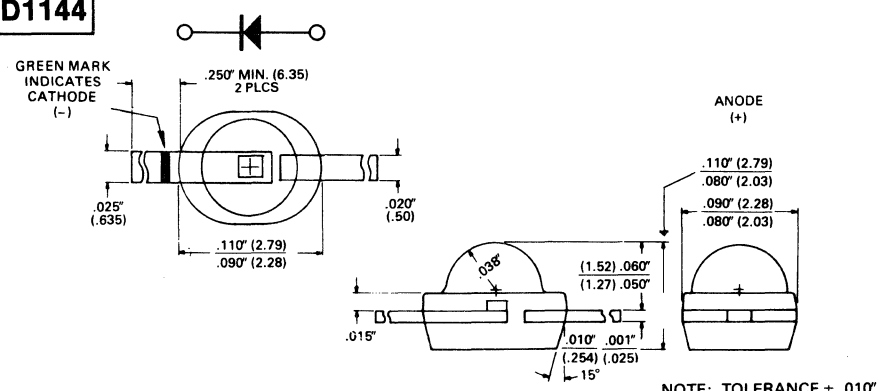

NOTE: ALL DIMENSIONS IN INCHES

NOTE: TOLERANCE ± .010″
UNLESS SPECIFIED

49. OUTLINE DRAWINGS

PD1145

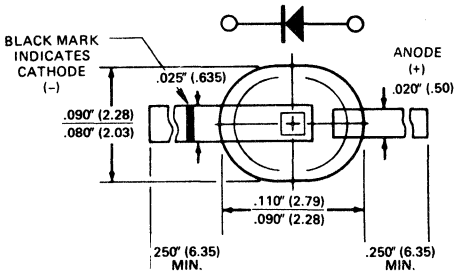

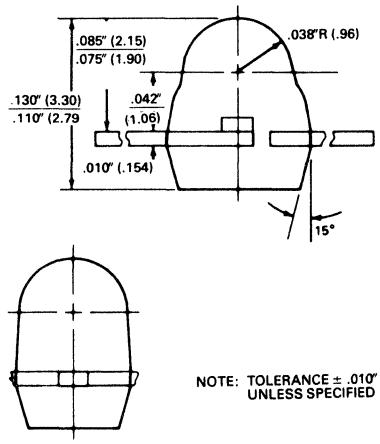

NOTE: TOLERANCE ± .010" UNLESS SPECIFIED

PD1145

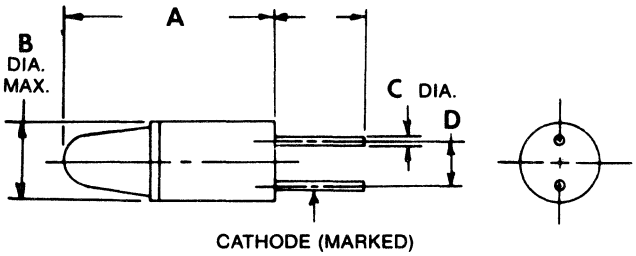

	A	B	C	D
PD1146	.625 MAX	.230	.020	.125
PD1146a	.700 MAX	.230	.020	.125

PD1147

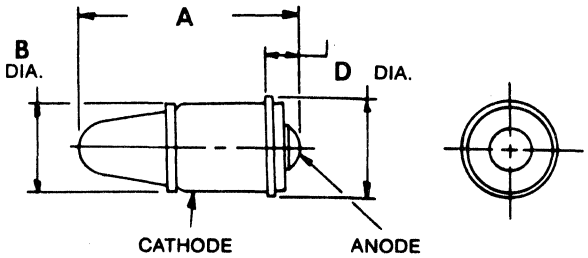

	A	B	C	D
PD1147	.625 MAX	.245 ±.005	.078 .100	.285
PD1147a	.700 MAX	.245 ±.005	.078 .110	.285

PD1148

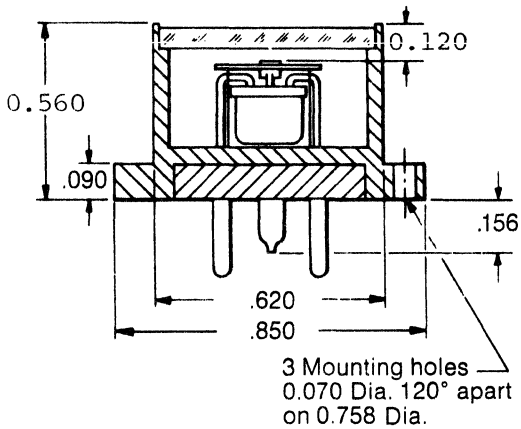

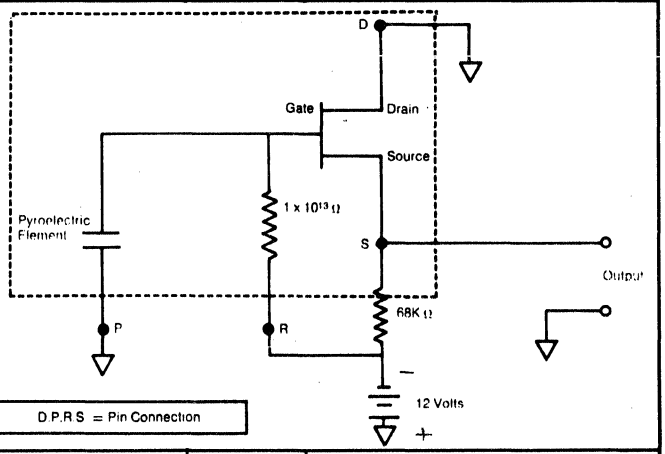

PD1150

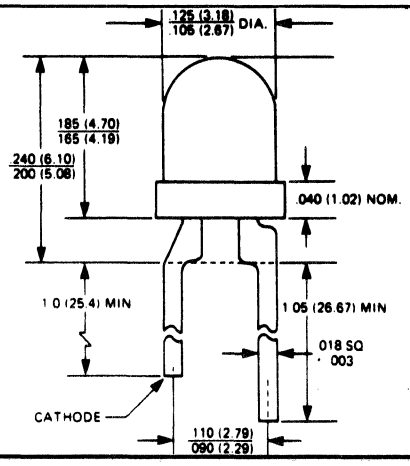

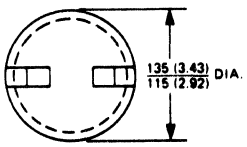

49. OUTLINE DRAWINGS

PD1151

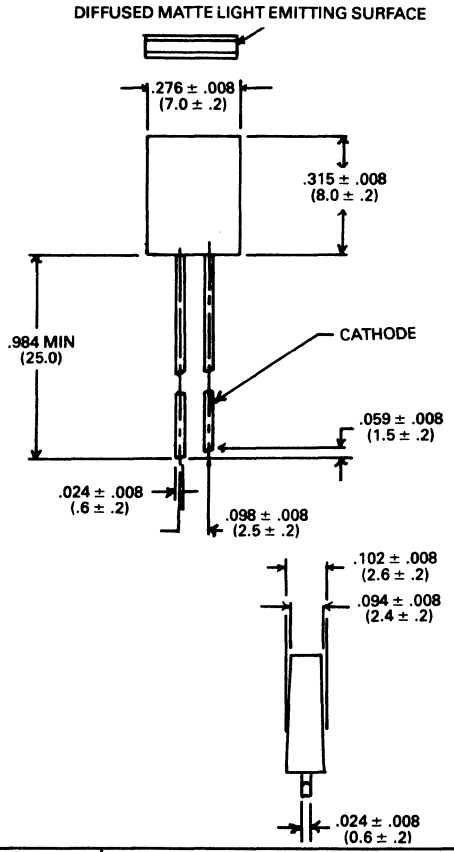

PD1152

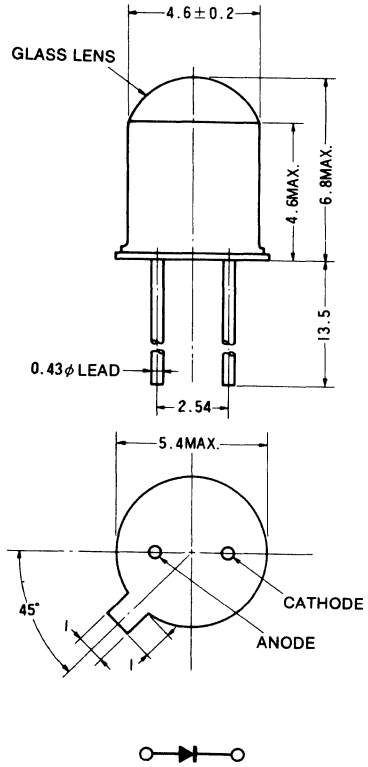

PD1154

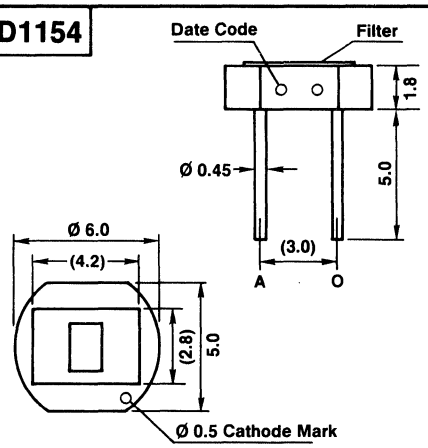

PD1155

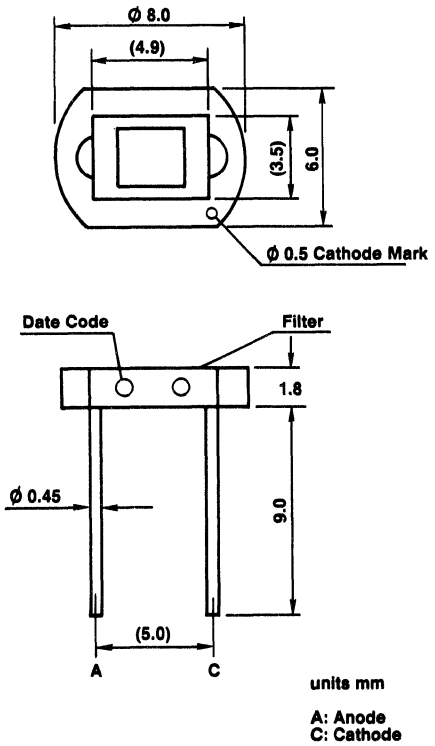

PD1156

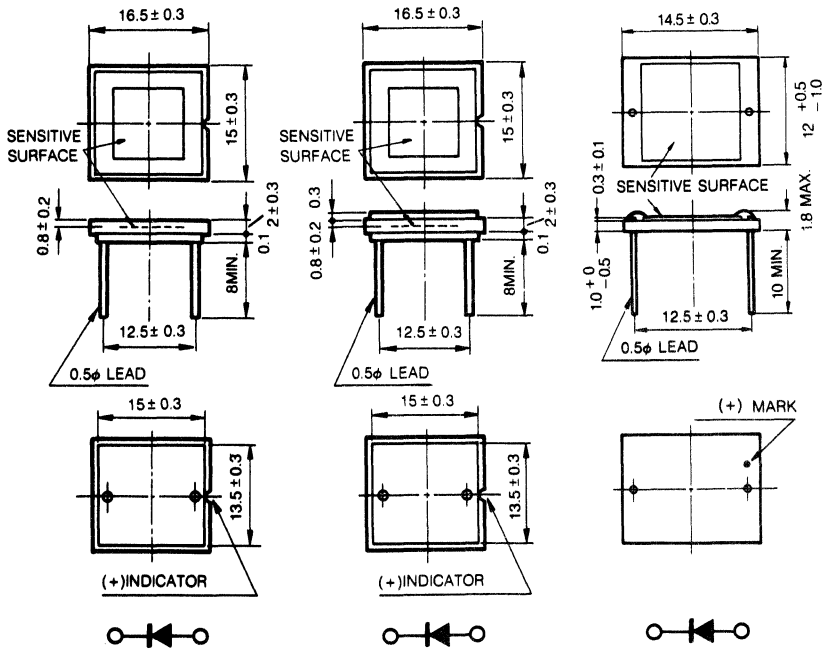

PD1156a PD1156b

49. OUTLINE DRAWINGS

PD1157

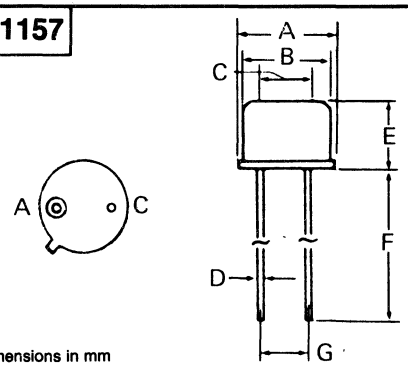

Dimensions in mm

	A	B	C	D	E	F	G
PD1157	.213 DIA	.189 DIA	.118 DIA	.018 DIA	.142	.669	.098

PD1158

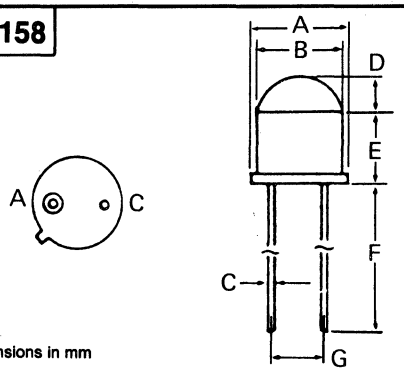

Dimensions in mm

	A	B	C	D	E	F	G
PD1158	.213 DIA	.189 DIA	.018 DIA	.079	.142	.669	.098

PD1159

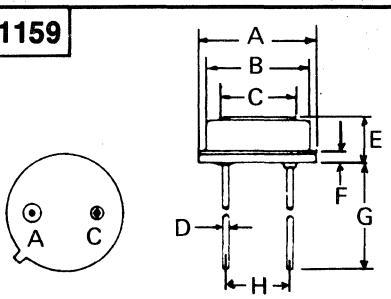

Dimensions in mm

	A	B	C	D	E	F	G	H
PD1159	.362 DIA	.319 DIA	.232 DIA	.018 DIA	.142	.035	.787	.197
PD1159a	.362 DIA	.319 DIA	.232 DIA	.018 DIA	.142	.035	1.57	.197

PD1160

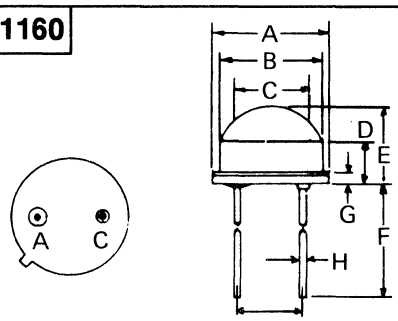

Dimensions in mm

	A	B	C	D	E	F	G	H	J
PD1160	.362 DIA	.319 DIA	.232 DIA	.138	.244	.787	.035	.018 DIA	.197

PD1161

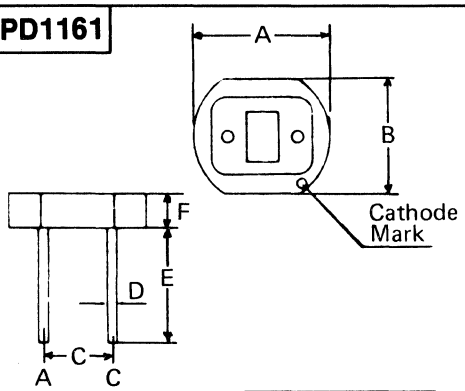

	A	B	C	D	E	F
PD1161	.232	.197	.118	.018	.197	.059

PD1162

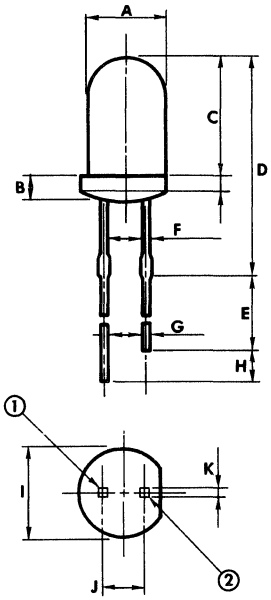

	A	B	C	D	E	F	G	H	I	J	K
PD1162	.197	.079	.299	.544	.709	.035	.020	.079	.228	.100	.020

PD1163

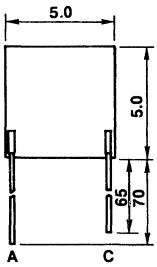

PD1164

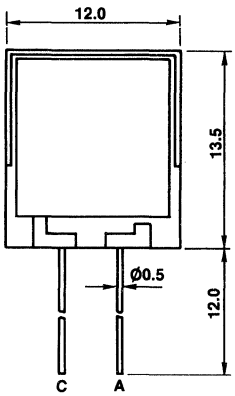

PD1165

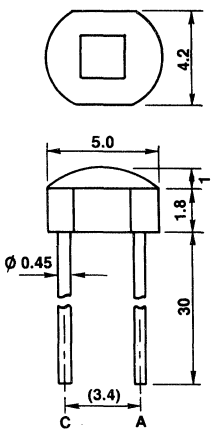

PD1166

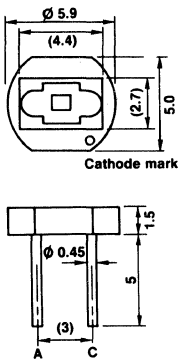

PD1167

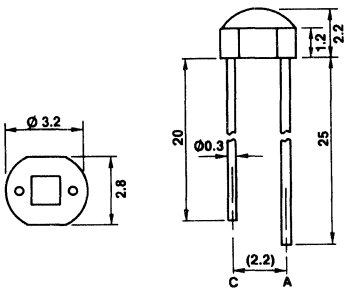

49. OUTLINE DRAWINGS

PD1168

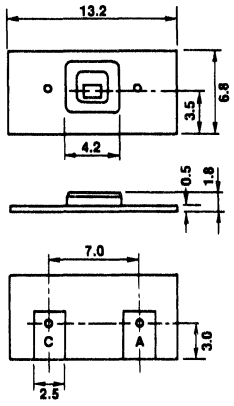

PD1169

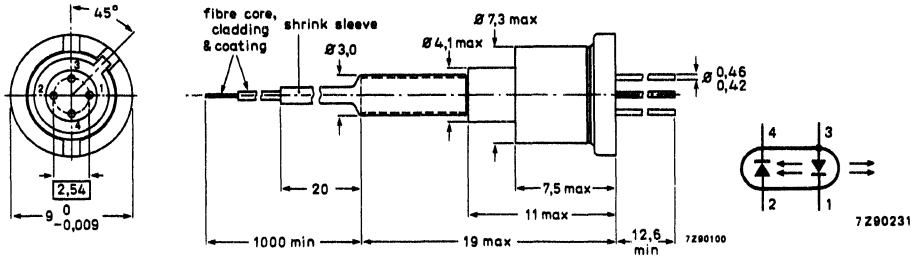

Dimensions in mm

PD1170

Dimensions in mm

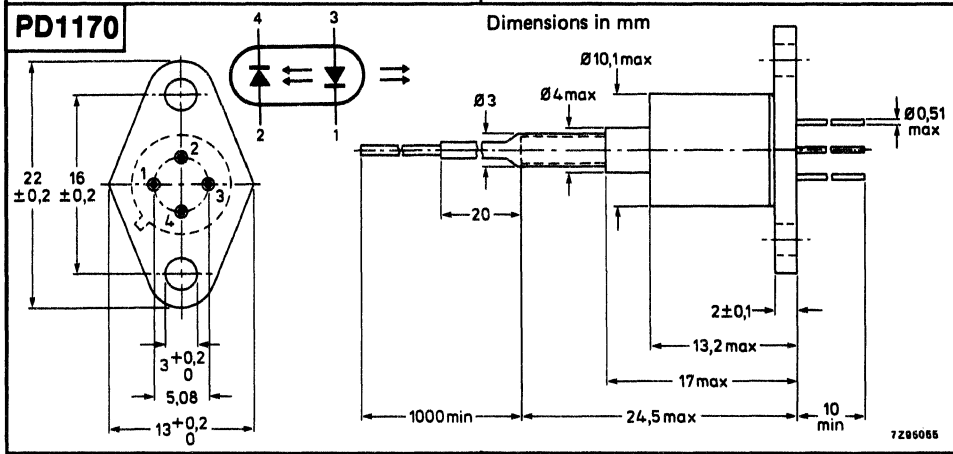

PD1173

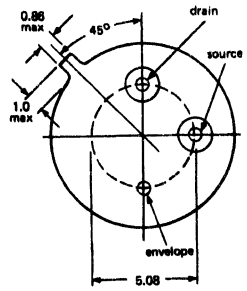

PD1171

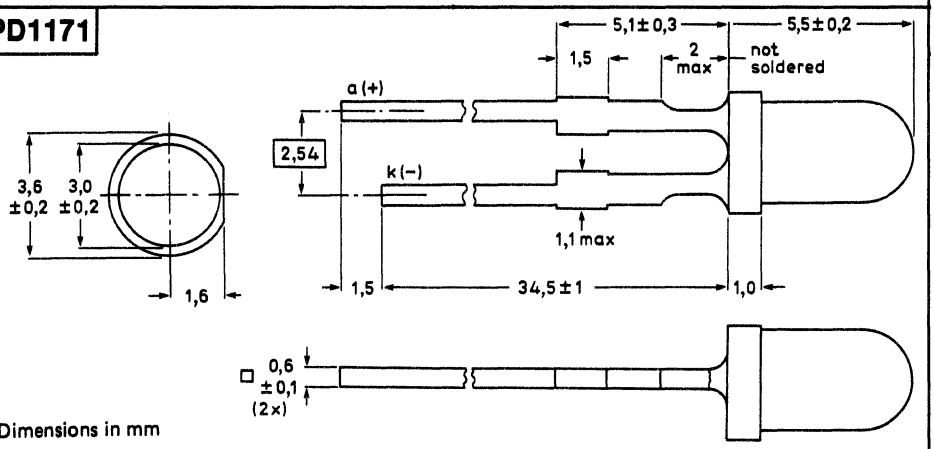

Dimensions in mm

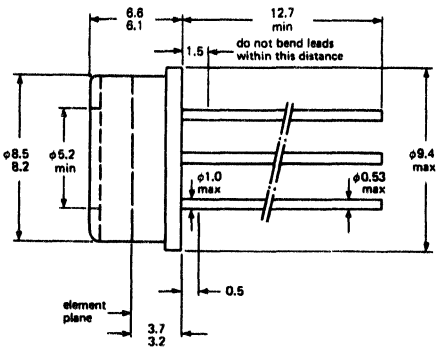

PD1172

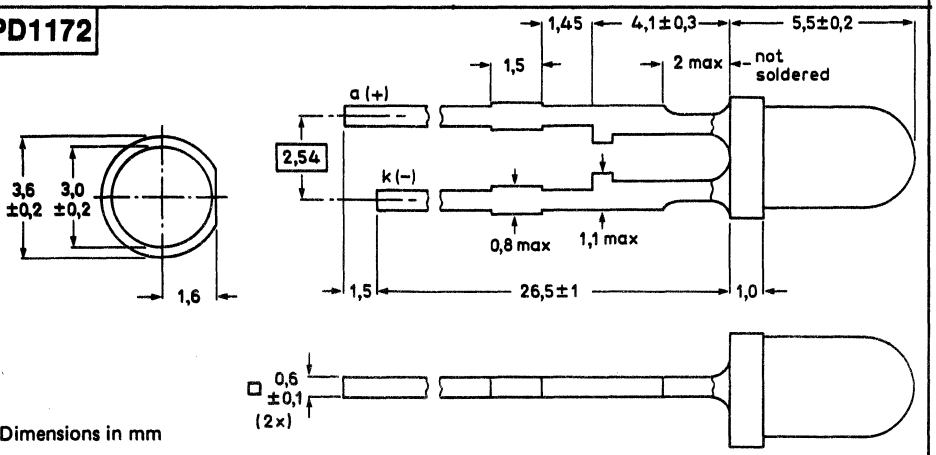

Dimensions in mm

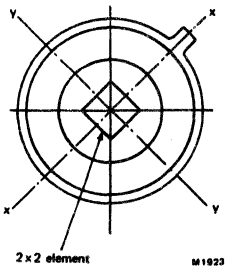

Dimensions in mm

49. OUTLINE DRAWINGS

PD1174

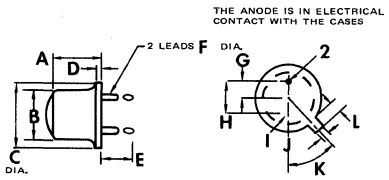

	A	B	C	D	E	F	G	H	J	K	L	Pin 1	Pin 2
PD1174	.170 .210	.178 .195	.209 .230	.030 MAX	.500 MIN	.016 .019	.050 T.P.	.100 T.P.	.036 .045	45°	.028 .048	K	A

PD1175

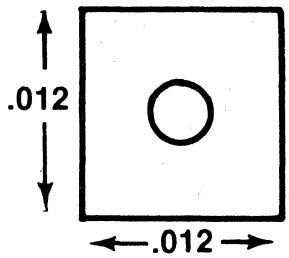

PD1176

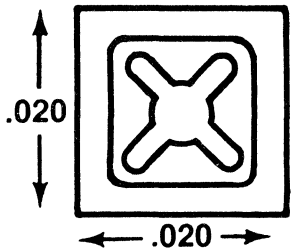

PD1177

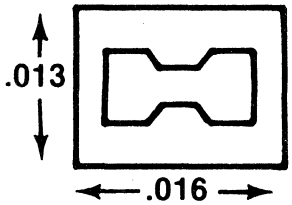

PD1178

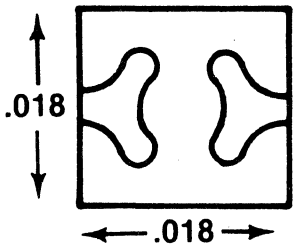

PD1179

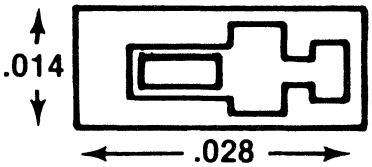

PD1180

.060" COAXIAL PACKAGE

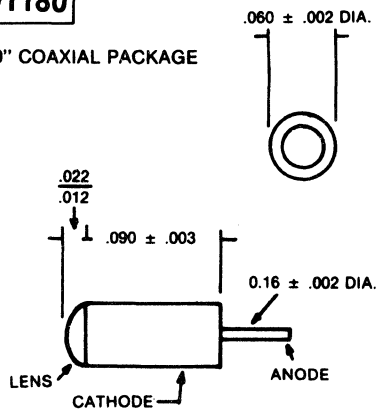

PD1182

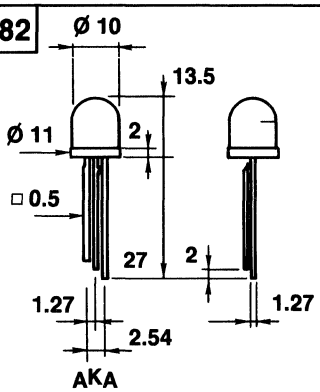

Dimensions in m.m.

PD1181

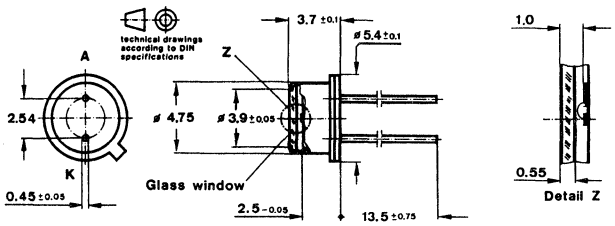

Anode connected with case

	Pin 1	Pin 2
PD1181	K	A
PD1181a	A	K

PD1183

DIMENSIONES in mm:

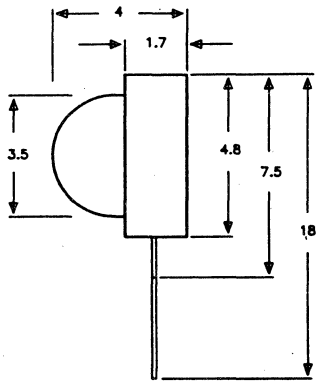

49. OUTLINE DRAWINGS

PD1184

Dimensions in mm

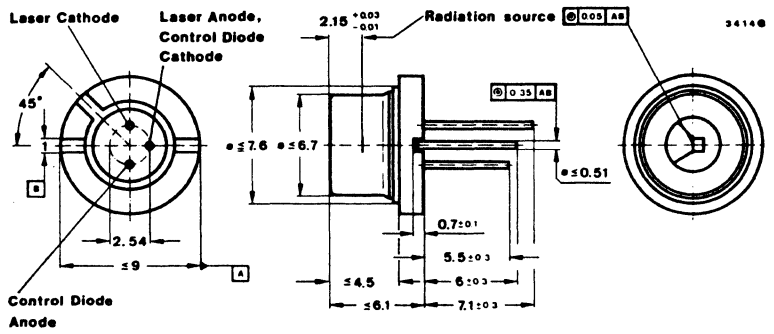

PD1185

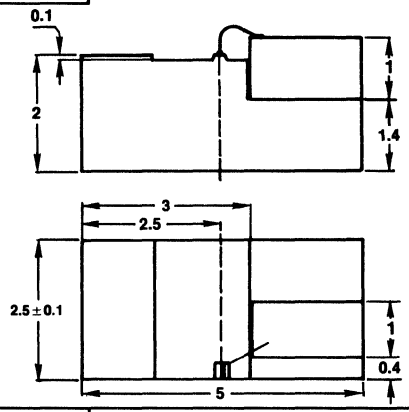

PD1186

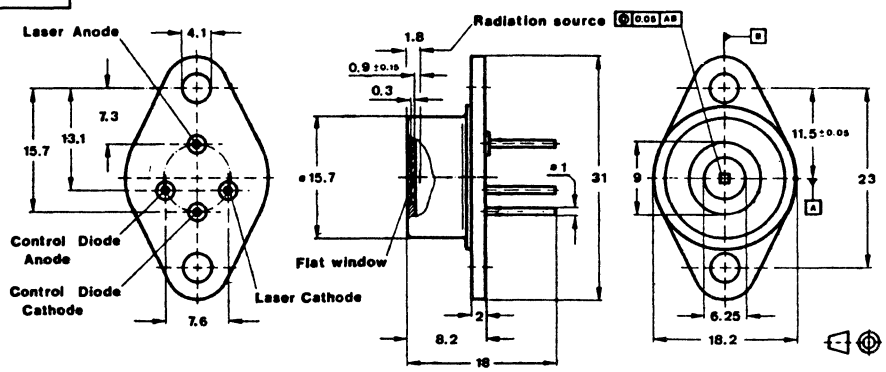

Dimensions in mm

PD1198

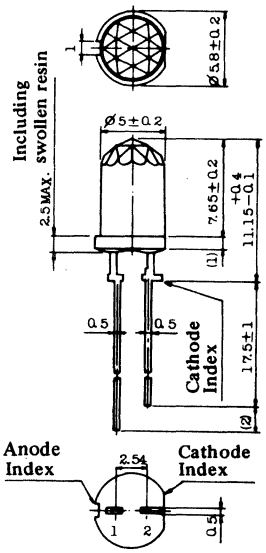

1. Anode
2. Cathode

PD1187

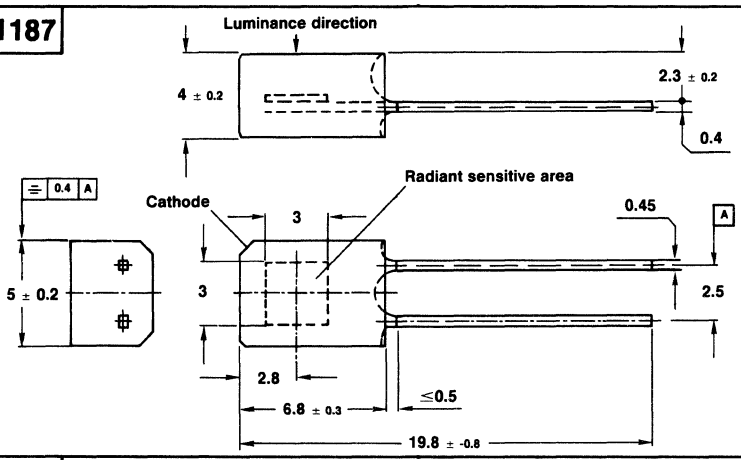

PD1188

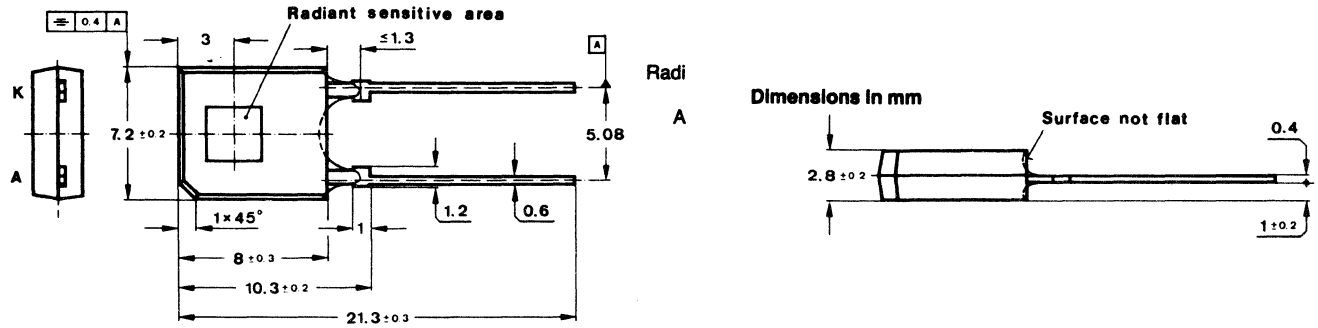

49. OUTLINE DRAWINGS

PD1101

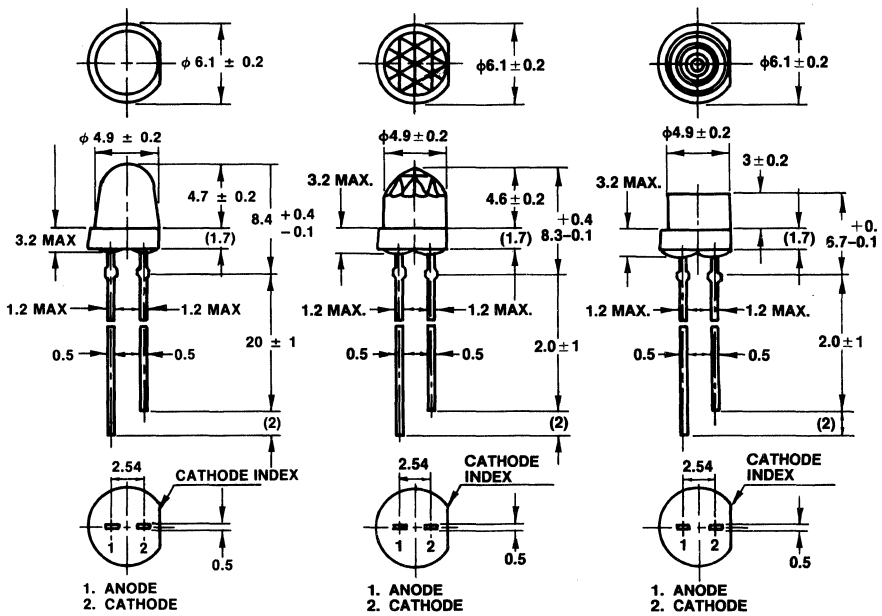

PD1101a PD1101b PD1101c

PD1102

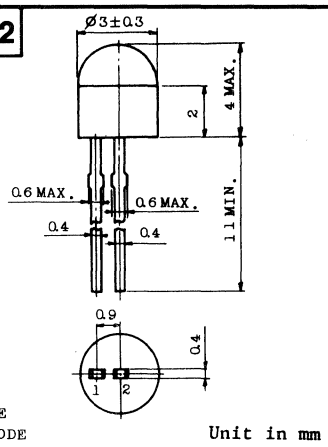

PD1103

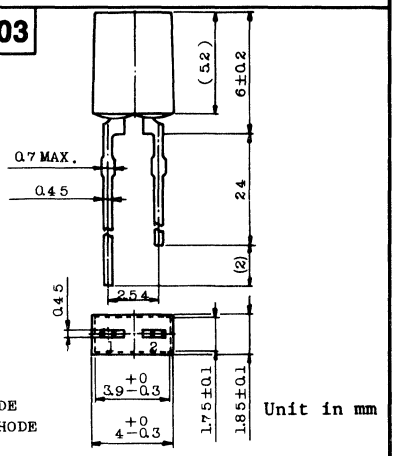

PD1104

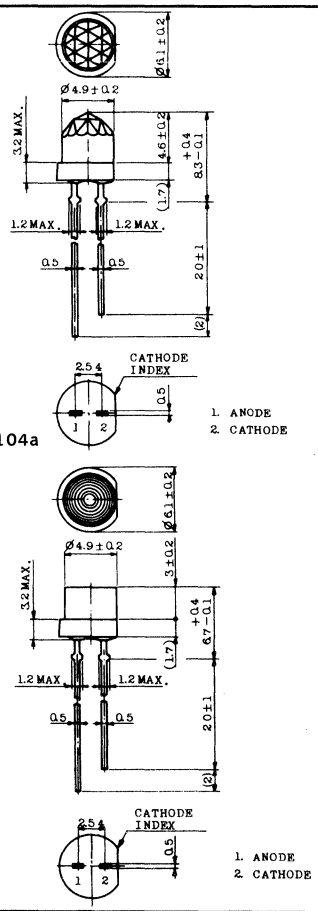

PD1104a PD1104b

PD1105

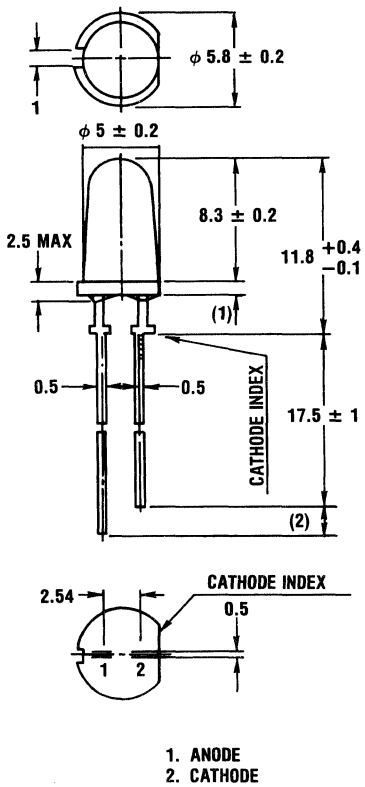

PD1106

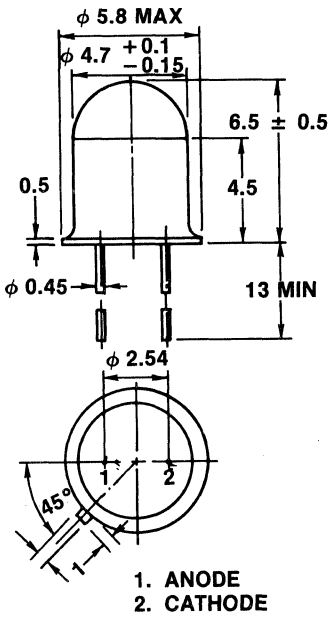

49. OUTLINE DRAWINGS

PD1189

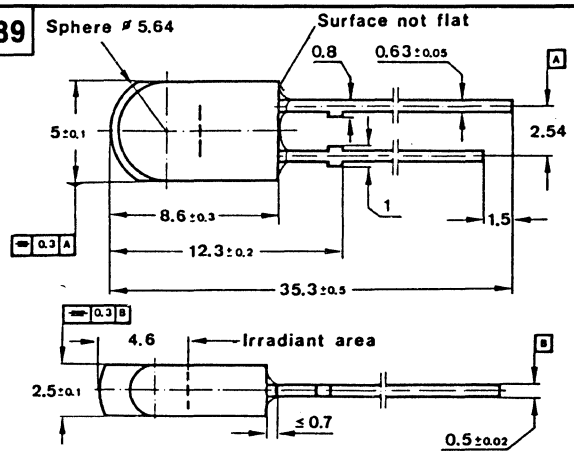

Dimensions in mm

PD1190

Dimensions in mm

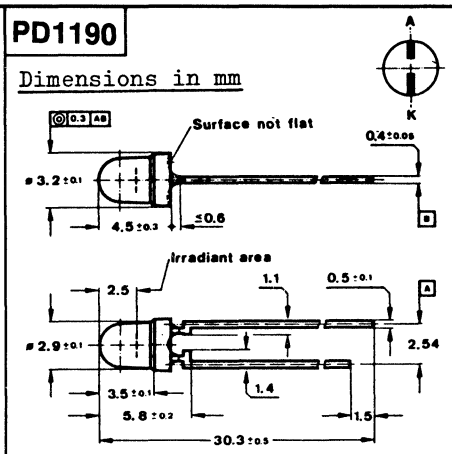

PD1191

Dimensions in mm:

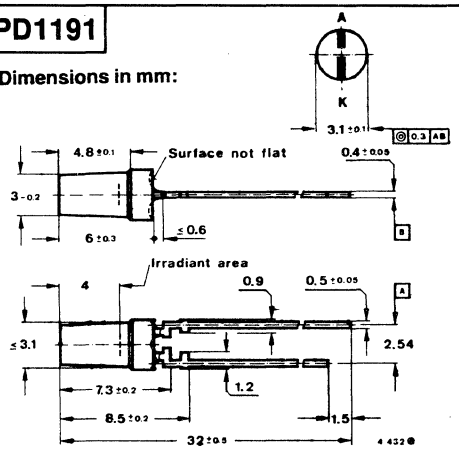

PD1192

Dimensions in mm:

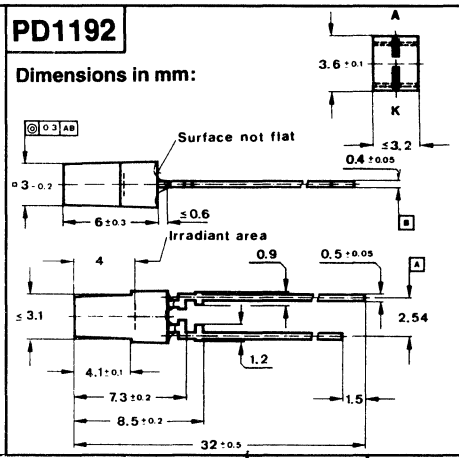

PD1193

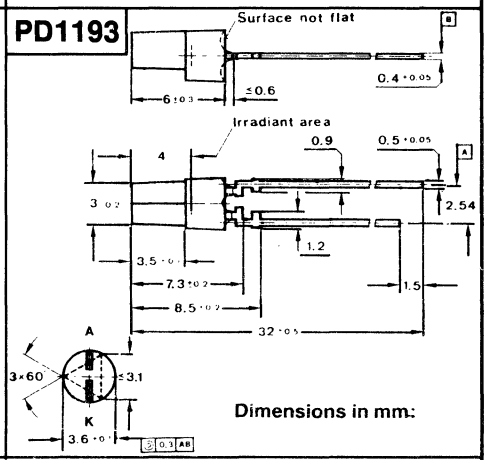

Dimensions in mm:

PD1194

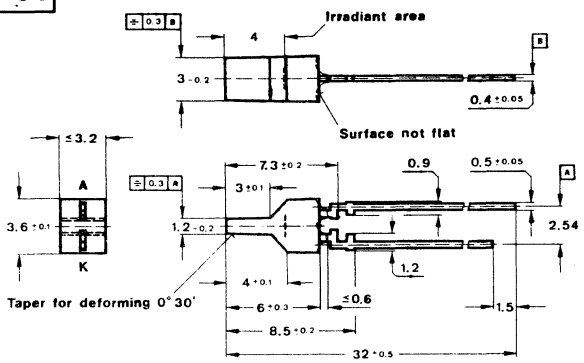

Dimensions in mm:

PD1195

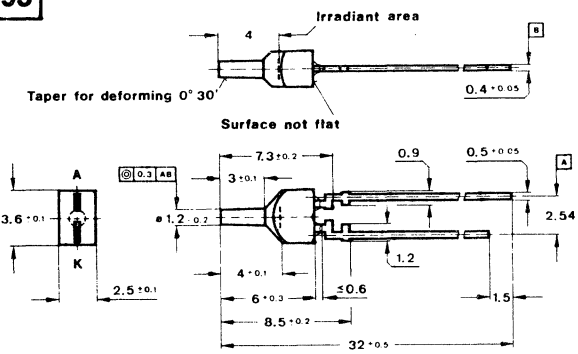

Dimensions in mm:

PD1107

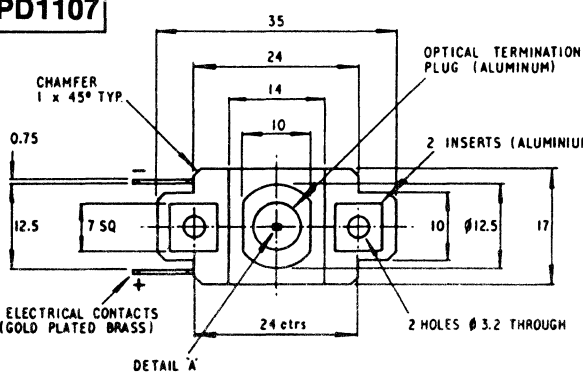

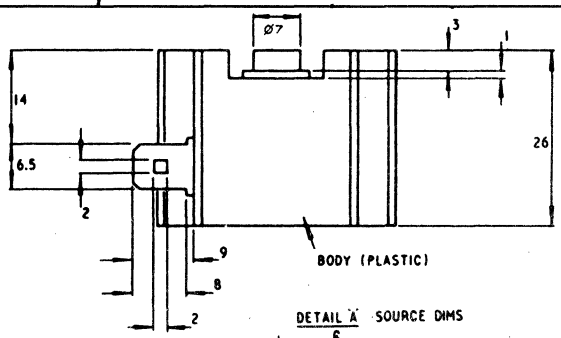

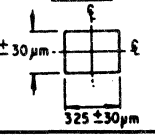

NOTE : Geometrical center of source lies within 50 µm of intersection of ℄'s.
Source consists of matrix of 23µm square emitting elements contained in area specified.

Dimensions in mm

49. OUTLINE DRAWINGS

PD1196

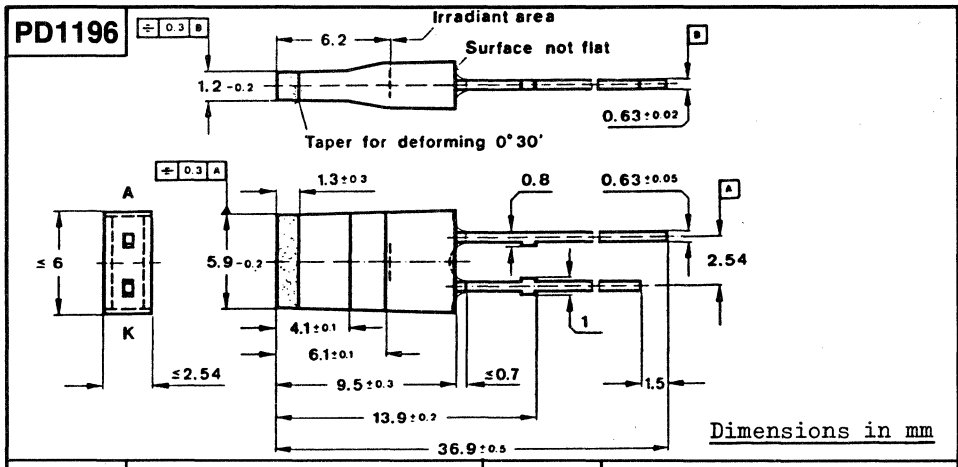

PD1197

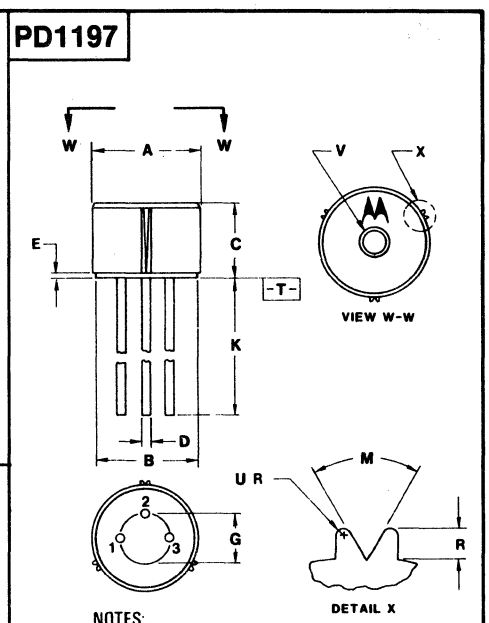

NOTES:
1. DIMENSION A IS A DATUM AND T IS BOTH A SEATING PLANE AND A DATUM.
2. POSITIONAL TOLERANCE FOR LEADS: ⌖ | ϕ 0.036 (0.014) Ⓜ T A Ⓜ
3. DIMENSIONING AND TOLERANCING PER ANSI Y14.5M, 1982.
4. CONTROLLING DIMENSION: INCH.

DIM	MILLIMETERS MIN	MILLIMETERS MAX	INCHES MIN	INCHES MAX
A	5.44	5.51	0.214	0.217
B	5.31	5.38	0.209	0.212
C	3.683	3.848	0.1450	0.1515
D	0.406	0.470	0.0160	0.0185
E	0.178	0.241	0.0070	0.0095
G	2.54 BSC		0.100 BSC	
K	12.70	14.22	0.500	0.560
M	50°	–	50°	–
R	0.13	0.25	0.005	0.010
U	0.05	0.08	0.002	0.003
V	1.27	1.52	0.050	0.060

PD1201

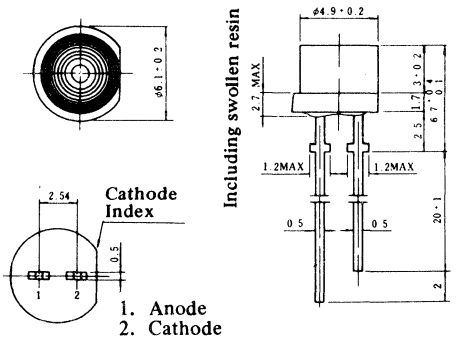

PD1199

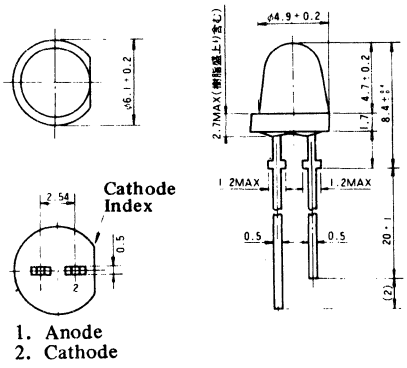

PD1200

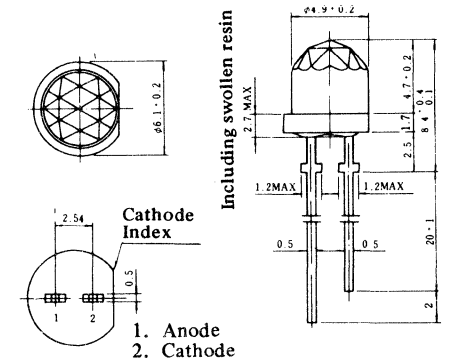

PD1203

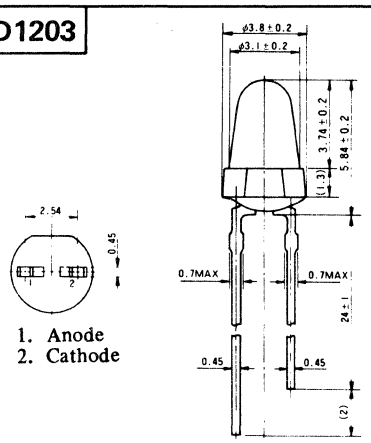

PD1202

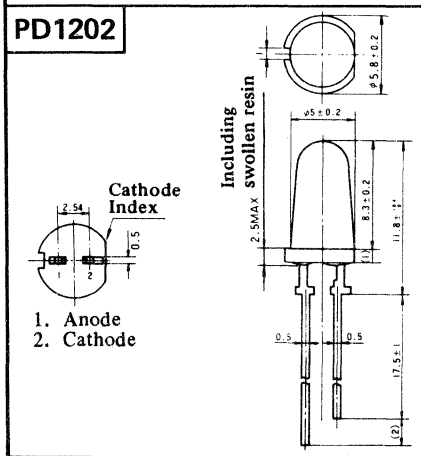

PD1205

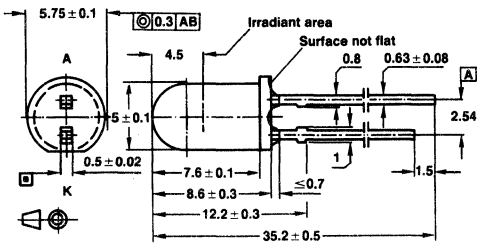

49. OUTLINE DRAWINGS

PD1204

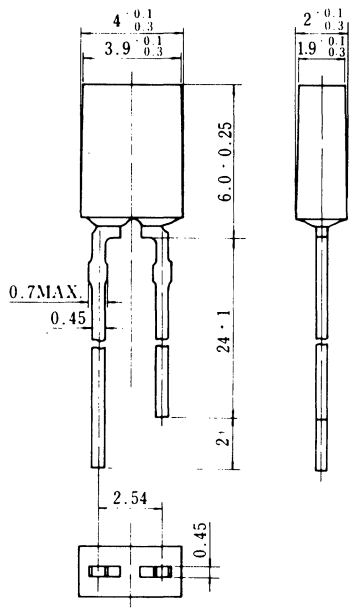

PD1206

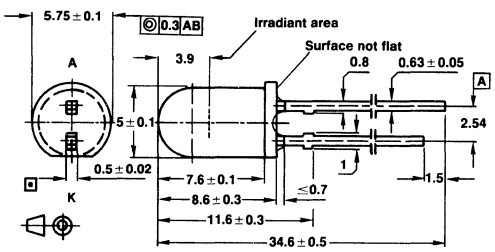

PD1207 | PD1208

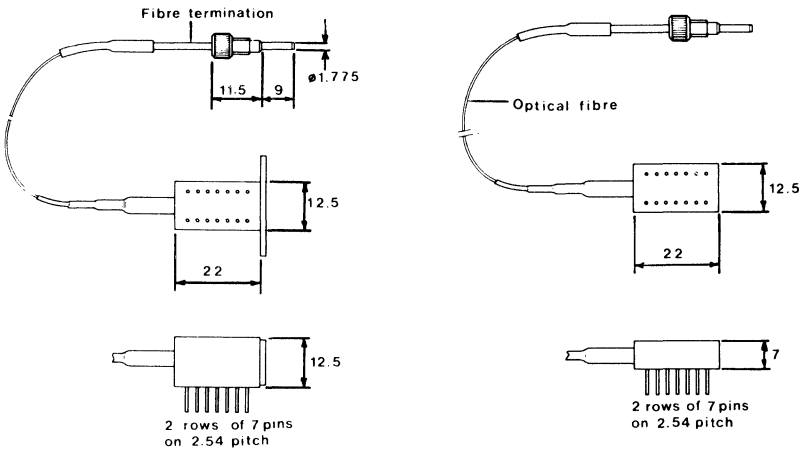

Continuous Wave Laser

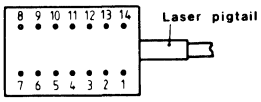

Base view on pin side.

1. Peltier heat pump anode (+) (for cooling).
2. }
3. } Not connected.
4. }
5. Package ground: also thermistor in —18 case.
6. Not connected.
7. Monitor cathode (+).
8. Monitor anode (—).
9. Laser cathode (—).
10. Laser anode (+) & ground.
11. Thermistor.
12. Thermistor. (PD1207-19): N.C. (PD1208-18)*.
13. Not connected.
14. Peltier heat pump cathode (—).

* Alternative connections considered on request.

PD1209

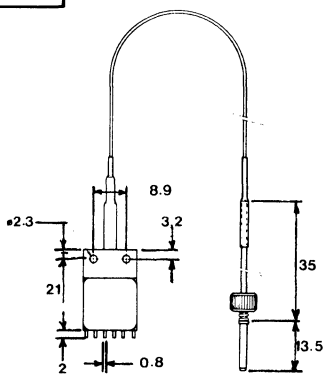

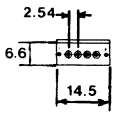

Pin Function

1. Case/ground.
2. Photodiode anode (—ve).
3. Photodiode cathode (+ve).
4. } Laser drive (—ve).
5. }
6. Case/ground/laser (+ve).

PD1234

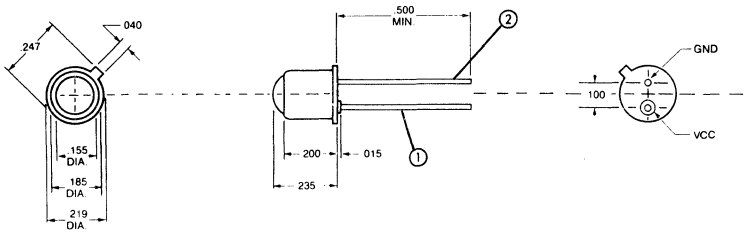

49. OUTLINE DRAWINGS

PD1210

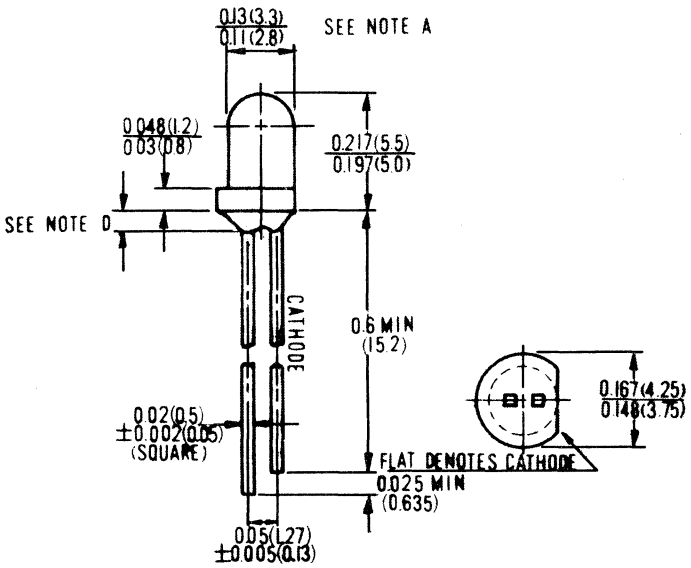

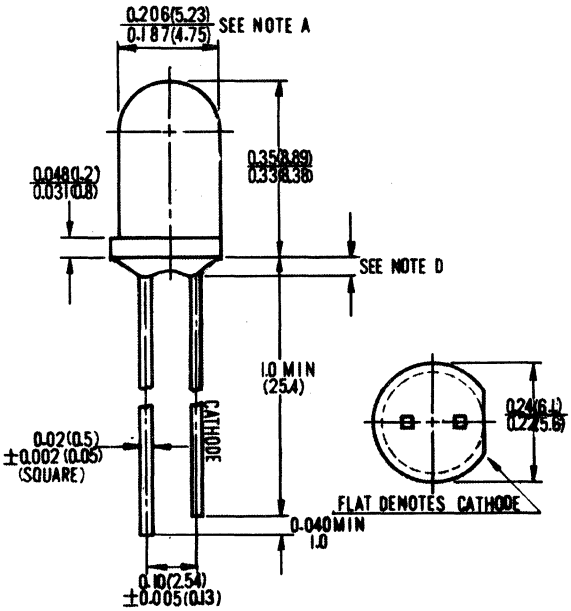

PD1210a

Suffix	A	B	C	D	E	F	G	H	Flat Side
PD1210c	.11(2.8) .13(3.3)	.197(5.0) .217(5.5)	0.5(12.7) Min	.025(.635) Min	.05(1.27)	.02(.50) Typ	.031(.80) .048(1.2)	.148(3.75) .167(4.25)	Ka
PD1210d	.118(3.0)	.189(4.8)	0.5(12.7)	.04(1.0)	.05(1.27)	.02(.50)	.03(.76)	.158(4.0)	Ka
PD1210e	.11(2.8) .13(3.3)	.197(5.0) .217(5.5)	0.5(12.7)	.025(.635) Min	.05(1.27)	.02(.50) Typ	.031(.80) .048(1.2)	.148(3.75) .167(4.25)	An
PD1210f	.187(4.75) .206(5.23)	.33(8.38) .35(8.89)	1.0(2.54) Min	.04(1.0) Min	.09(2.41) .10(2.67)	.018(.45) .022(.55)	.031(.80) .048(1.2)	.22(5.6) .24(6.1)	An
PD1210g	.118(3.0)	.189(4.8)	.50(1.27) Min	.04(1.0) Min	.05(1.27)	.02(.50)	.03(.76)	.158(4.0)	Collector

PD1211

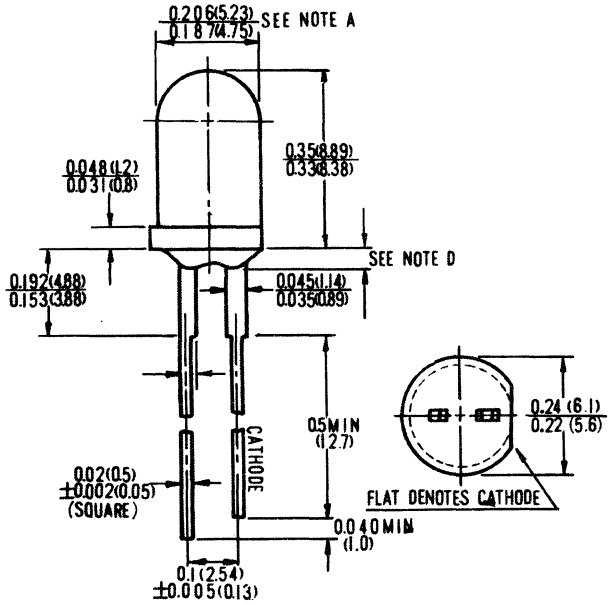

PD1211a Short Lead Collector

PD1212

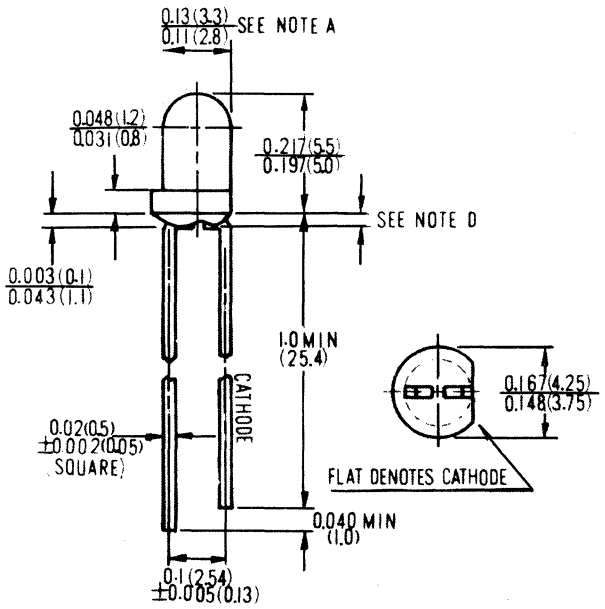

PD1212a Short Lead Collector

49. OUTLINE DRAWINGS

PD1213

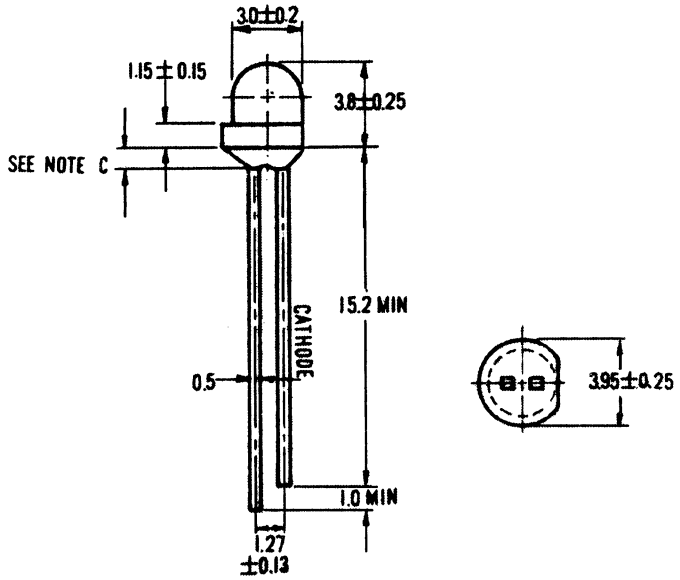

	A	B	C	D	E	F	G	H	U	Short Lead
PD1213	3.0	3.8	15.2 MIN	1.0 MIN	1.27	0.5	1.15	3.95	1.5	Ka
PD1213a	2.8 / 3.3	3.5 / 4.0	12.7 MIN	.635 MIN	1.27	0.5 TYP	.95 / 1.35	3.7 / 4.2	1.5	Ka
PD1213b	2.8 / 3.3	3.5 / 4.0	12.7 MIN	1.0	1.27	0.5 TYP	.95 / 1.35	3.7 / 4.2	1.5	Collector

PD1214

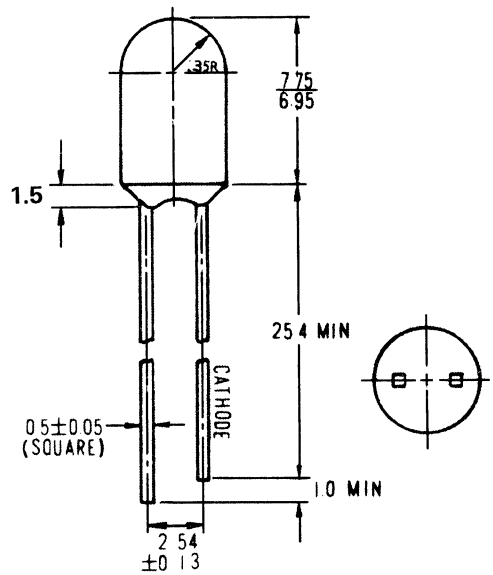

PD1214a – Short Lead Anode

PD1215

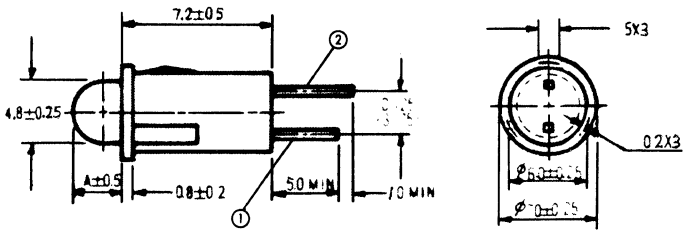

PD1216

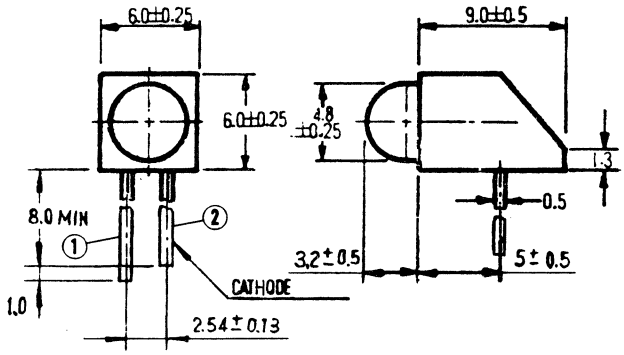

PD1217

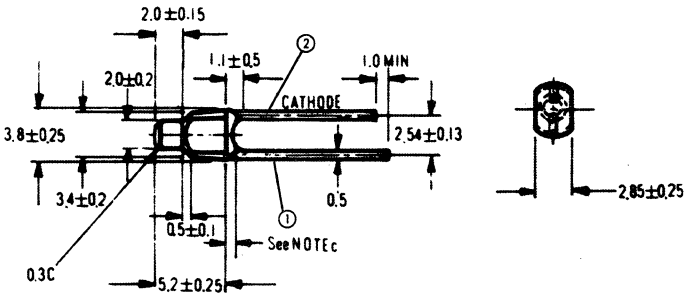

PD1218

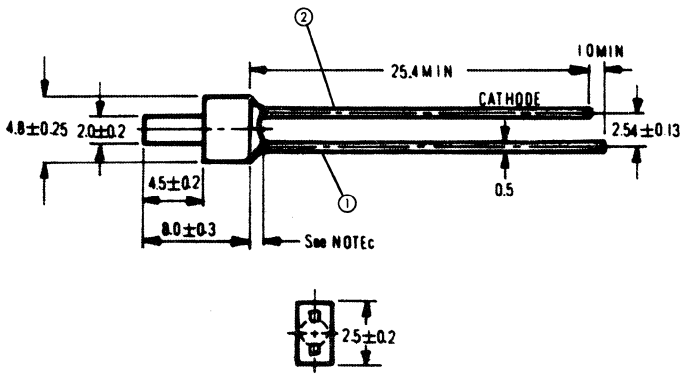

49. OUTLINE DRAWINGS

PD1219

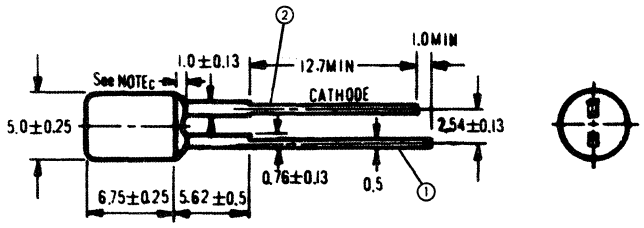

PD1220

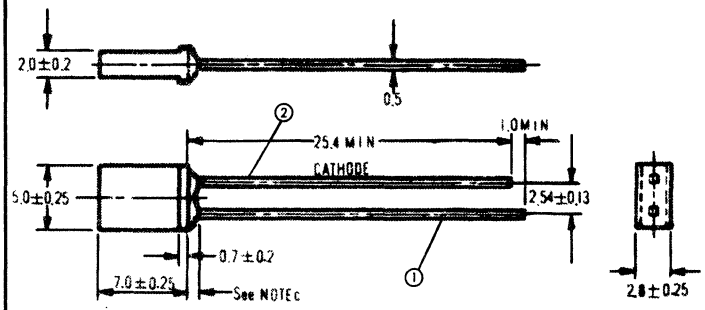

PD1221

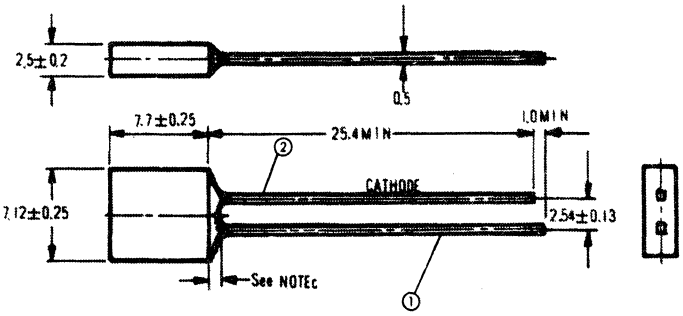

PD1222

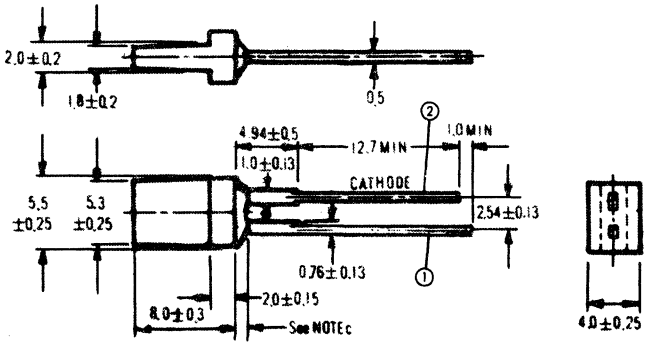

PD1223

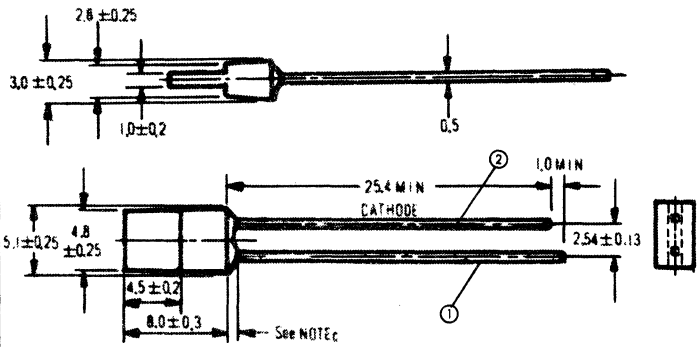

PD1224

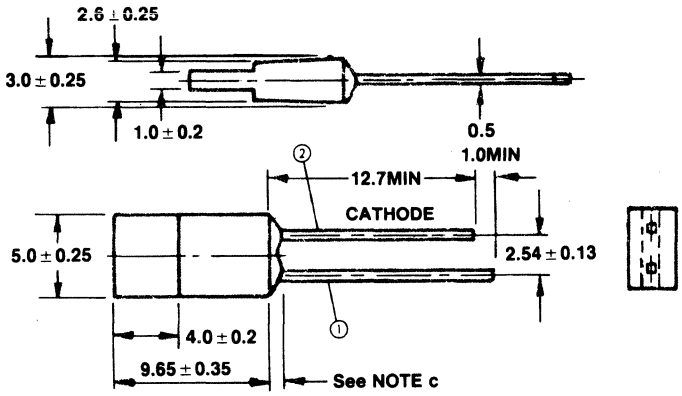

PD1225

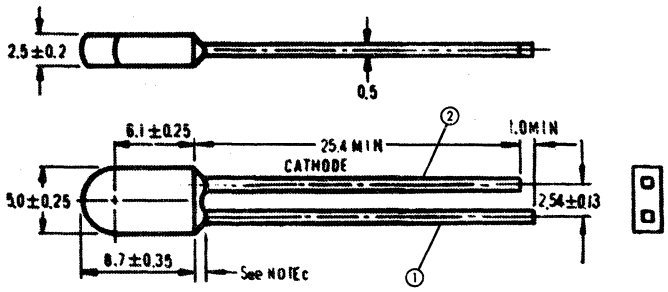

PD1226

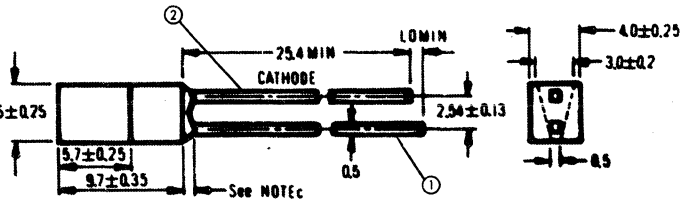

49. OUTLINE DRAWINGS

PD1227

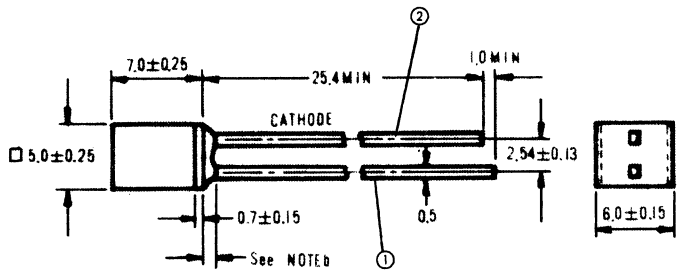

PD1228

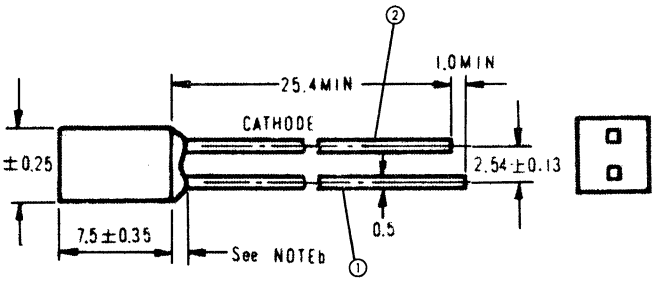

PD1229

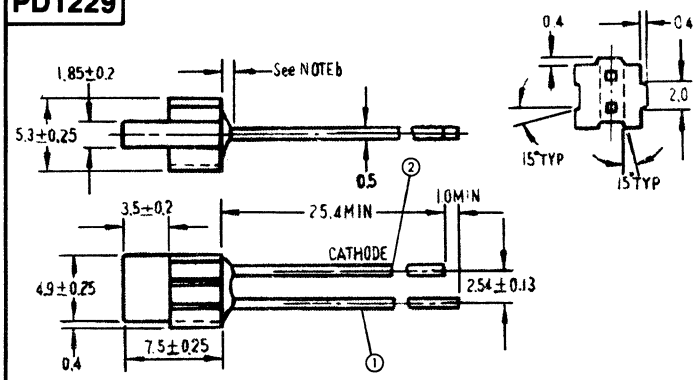

PD1230

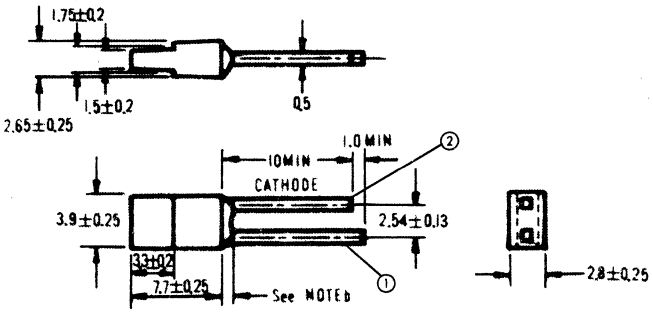

PD1231

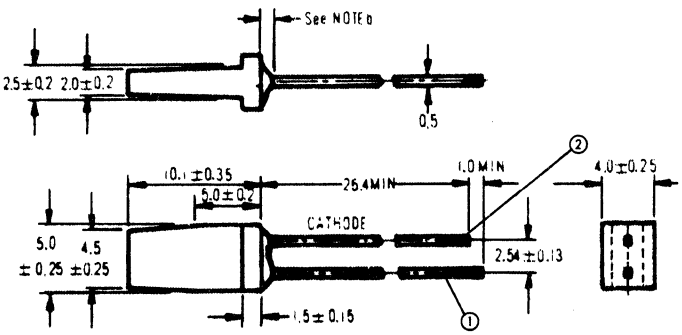

PD1232

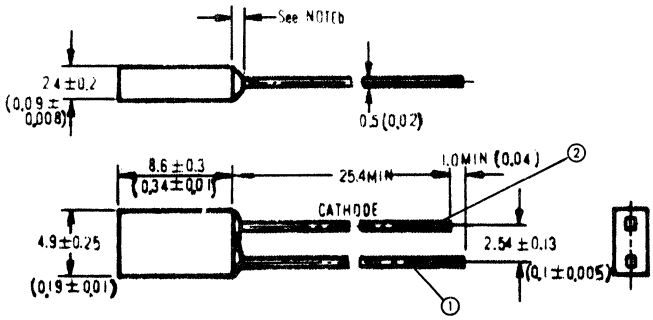

PD1233

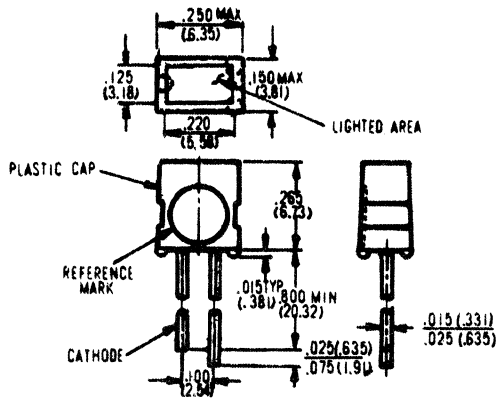

PD1233a- Short Lead Anode

49. OUTLINE DRAWINGS

PD1235

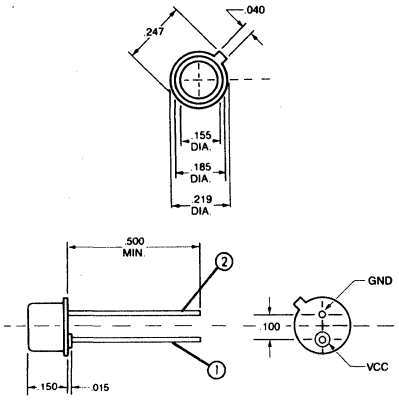

PD1236

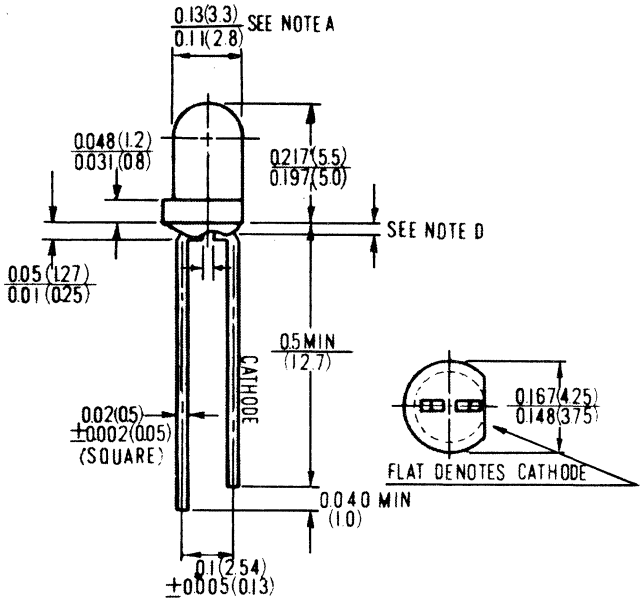

PD1236a- Short Lead Anode

PD1237

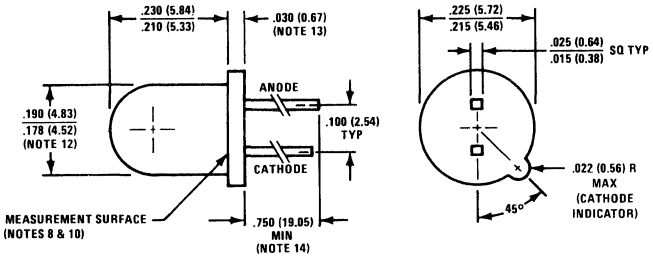

DIMENSIONS ARE IN INCHES (MILLIMETERS)

PD1239

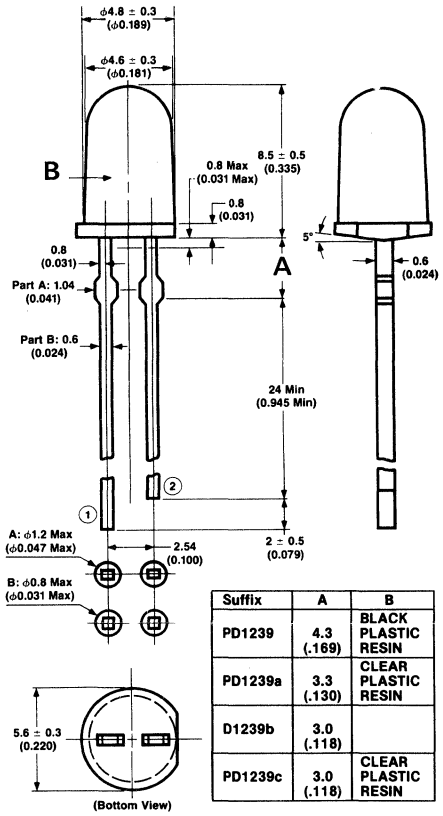

Suffix	A	B
PD1239	4.3 (.169)	BLACK PLASTIC RESIN
PD1239a	3.3 (.130)	CLEAR PLASTIC RESIN
D1239b	3.0 (.118)	
PD1239c	3.0 (.118)	CLEAR PLASTIC RESIN

Package Dimensions in Millimeters (Inches)

PD1240

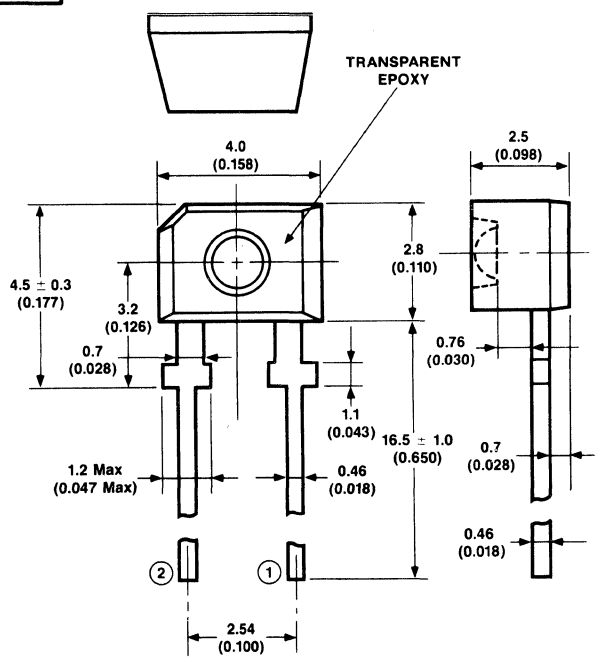

Package Dimensions in Millimeters (Inches)

49. OUTLINE DRAWINGS

PD1241

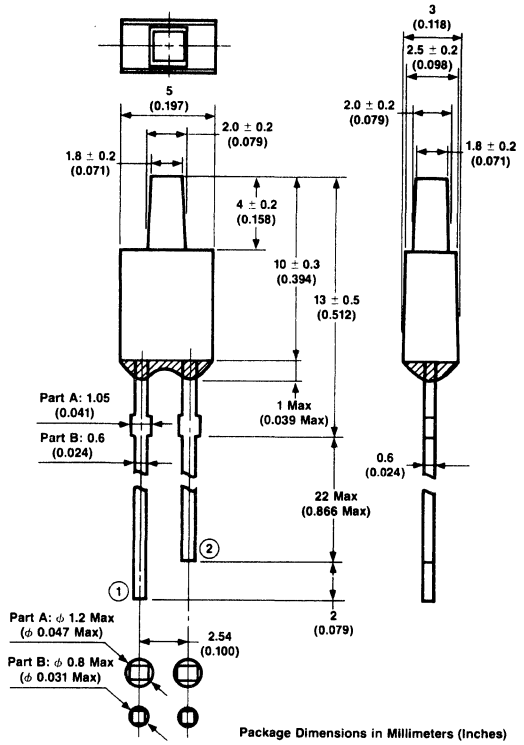

Package Dimensions in Millimeters (Inches)

PD1242

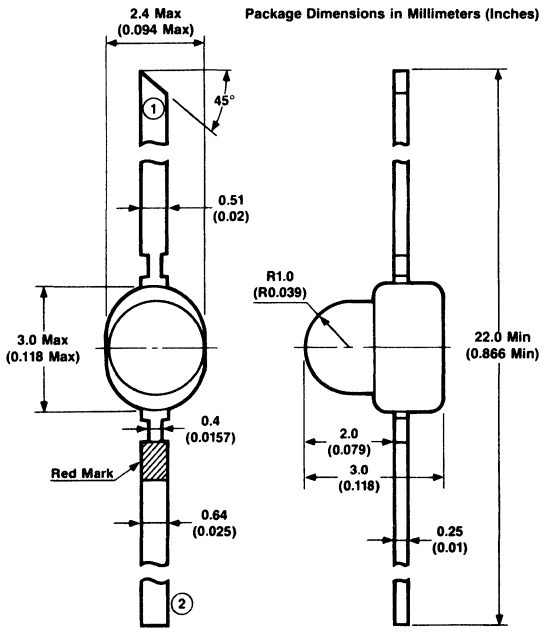

Package Dimensions in Millimeters (Inches)

SR506D: Red diffused plastic lens
SR506C: Clear plastic lens
SG206D: Green diffused plastic lens
SG206T: Green transparent plastic lens
SY406D: Amber diffused plastic lens
SY406T: Amber transparent plastic lens

PD1243

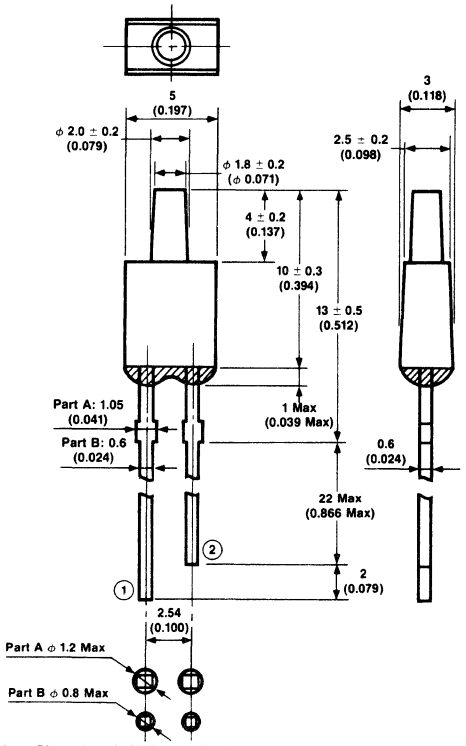

Package Dimensions in Millimeters (Inches)

PD1244

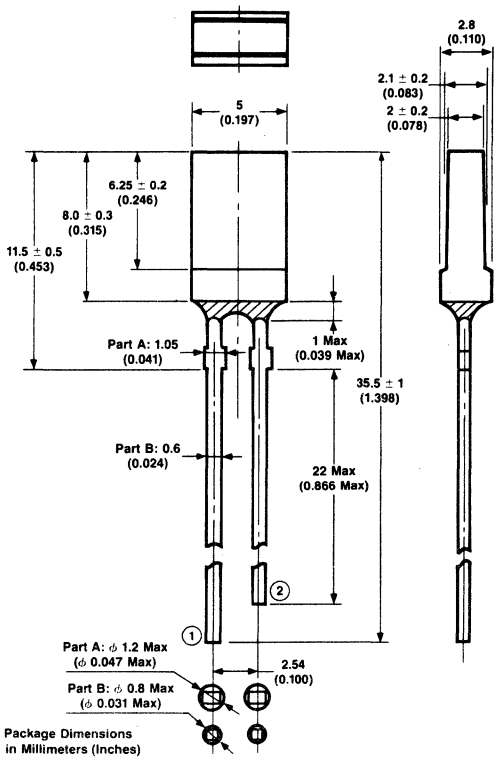

Package Dimensions
in Millimeters (Inches)

49. OUTLINE DRAWINGS

PD1245

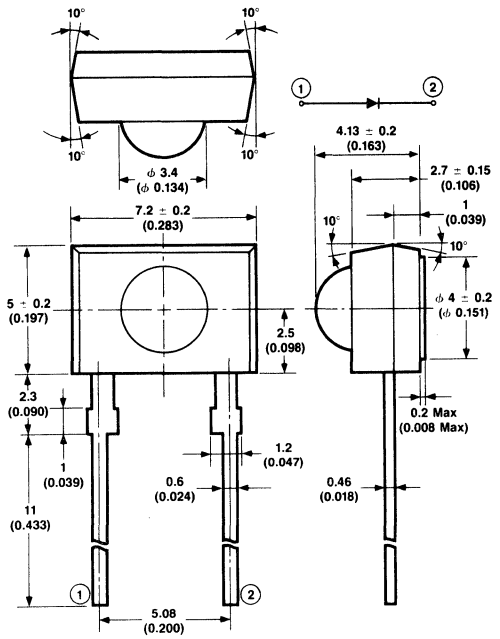

Package Dimensions in Millimeters (Inches)

PD1248

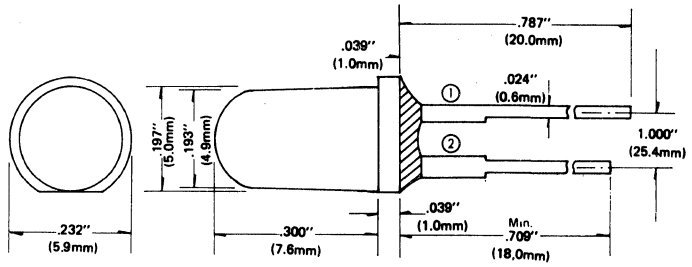

PD1249

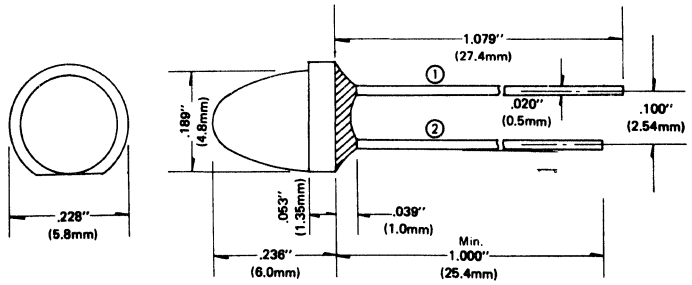

PD1246

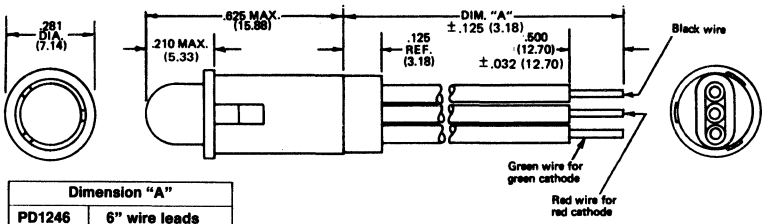

Dimension "A"	
PD1246	6" wire leads
PD1246a	8" wire leads
PD1246b	10" wire leads
PD1246c	12" wire leads
PD1246d	14" wire leads

PD1247

	DIMENSIONS IN MILLIMETERS									
	A	B	C	D	E	F	G	H	J	K
PD1247	16.0	2.28	14.5	1.0 MAX	0.8	4.5	3.0	2.9	3.9	
PD1247a	27.4	2.54	25.4	1.0	0.8	4.5	3.0	2.9	3.9	
PD1247b	16.0	2.28	14.5	1.0	1.0	3.5	2.9	2.7	3.2	0.5
PD1247c	16.0	2.28	14.5	1.0	1.3	6.0	4.7	4.6	5.8	0.5
PD1247d	16.0	2.28	14.5	1.0	1.0	5.0	4.0	3.9	4.8	0.5
PD1247e	27.4	2.54	25.4	1.0	1.0	7.6	5.0	4.9	5.9	0.5

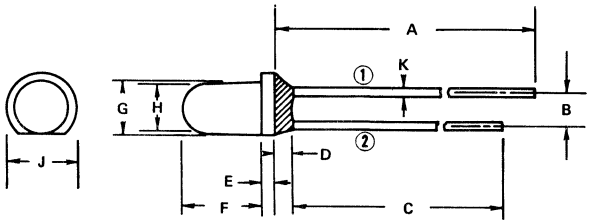

PD1250

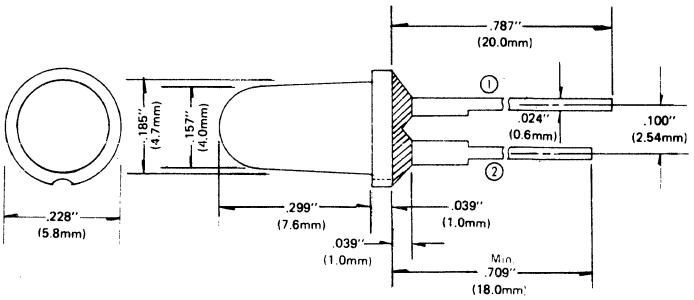

49. OUTLINE DRAWINGS

PD1251

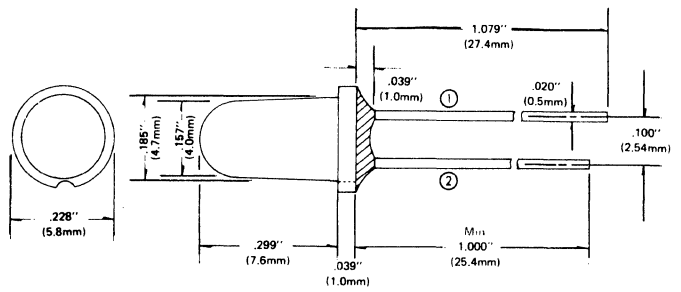

PD1252

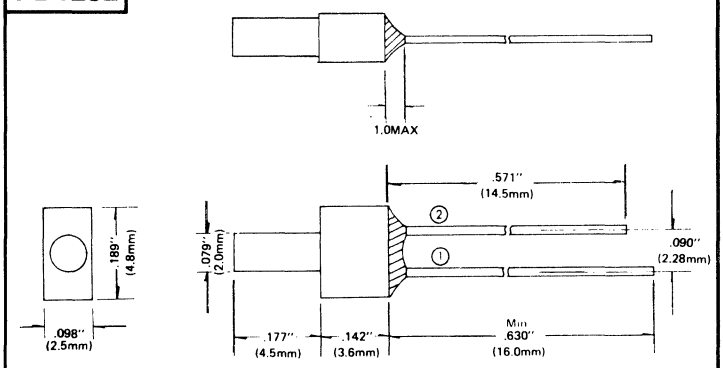

PD1253

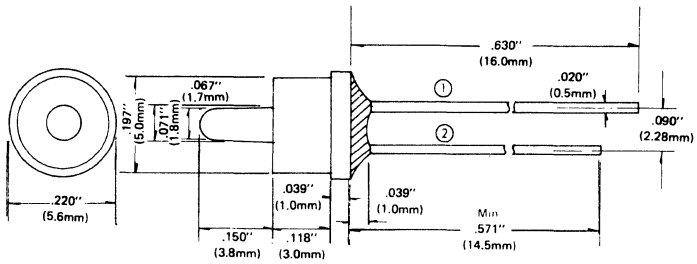

PD1254

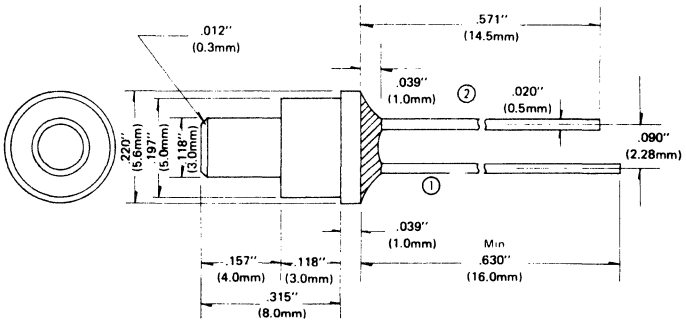

PD1255

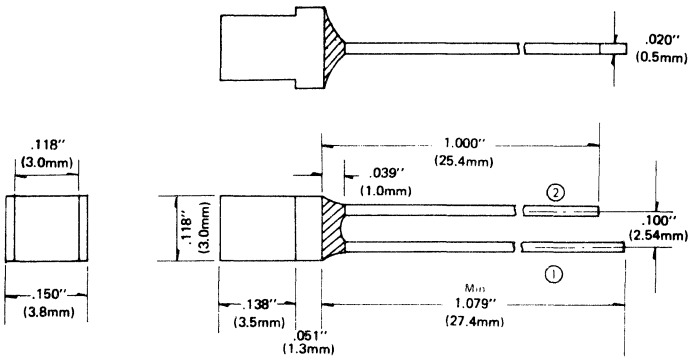

PD1256

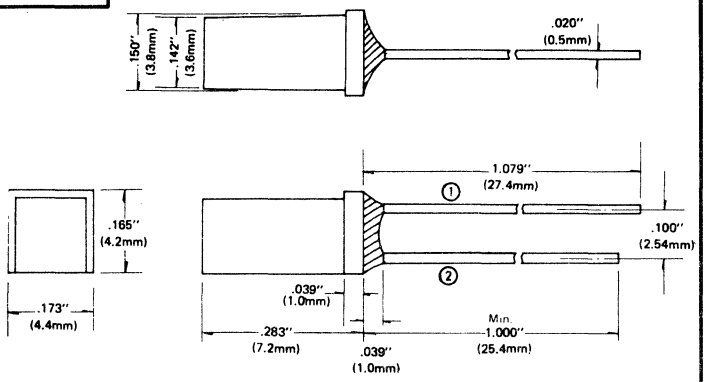

PD1257

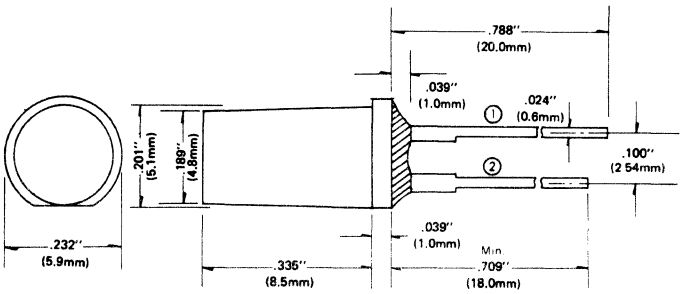

PD1258

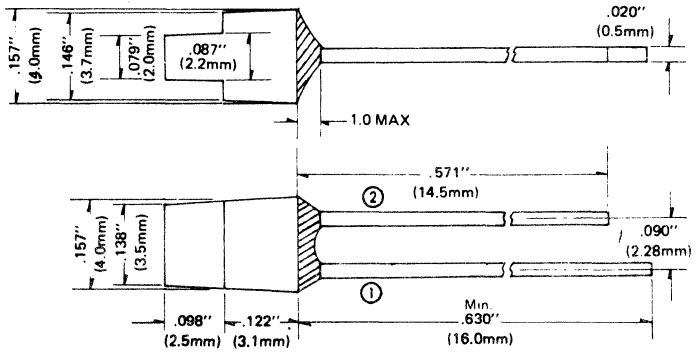

49. OUTLINE DRAWINGS

PD1259

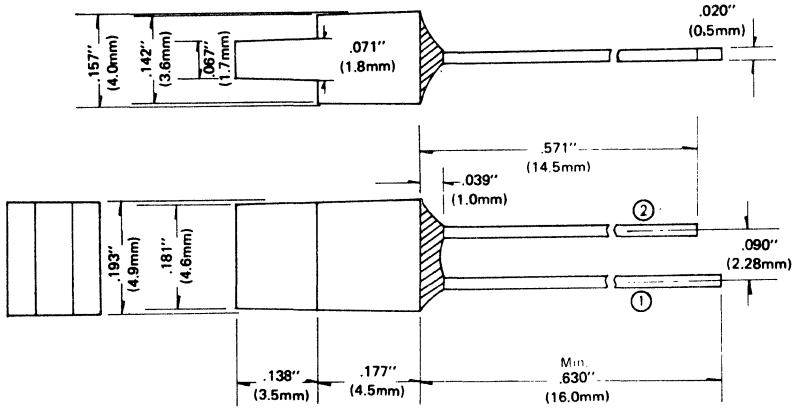

PD1260

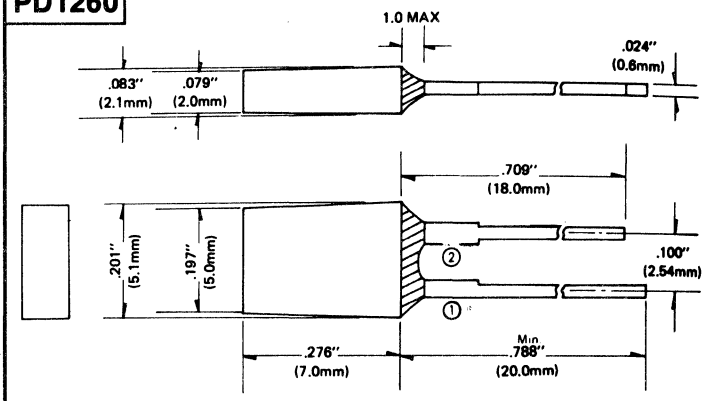

PD1261

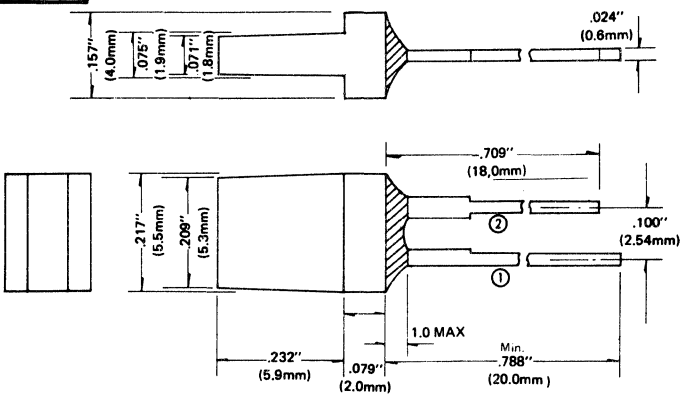

PD1262

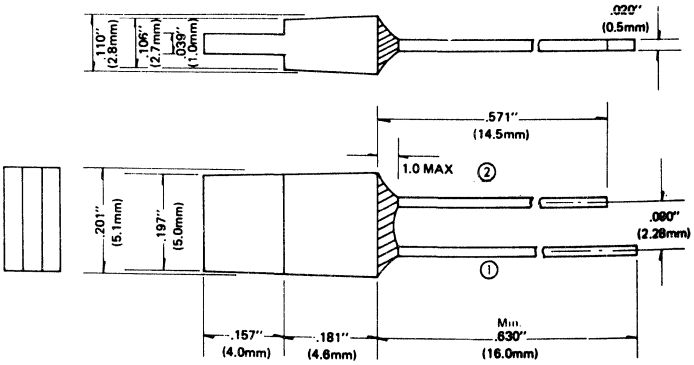

PD1263

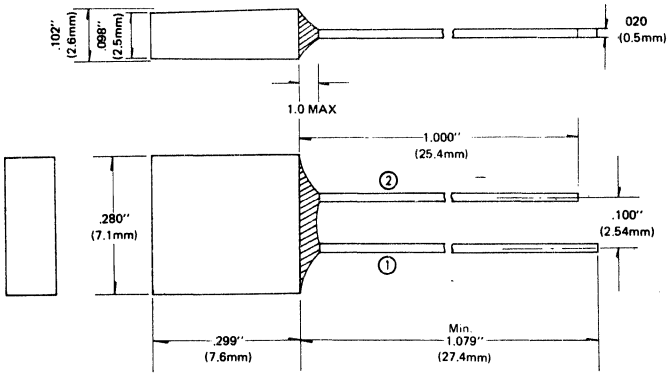

PD1264

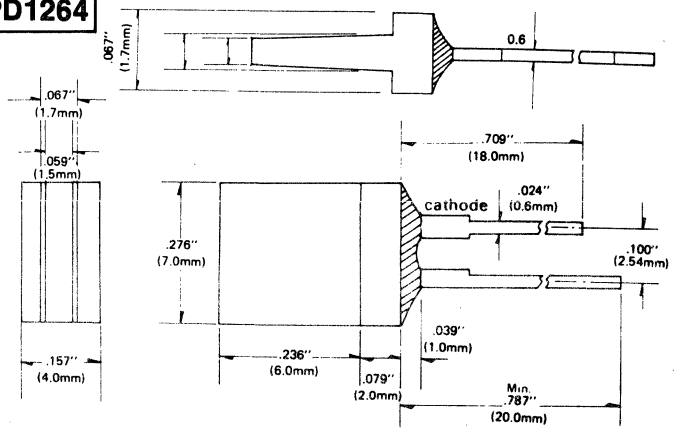

PD1265

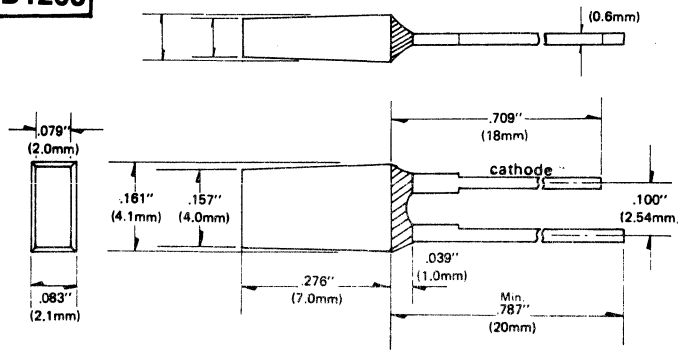

49. OUTLINE DRAWINGS

PD1266

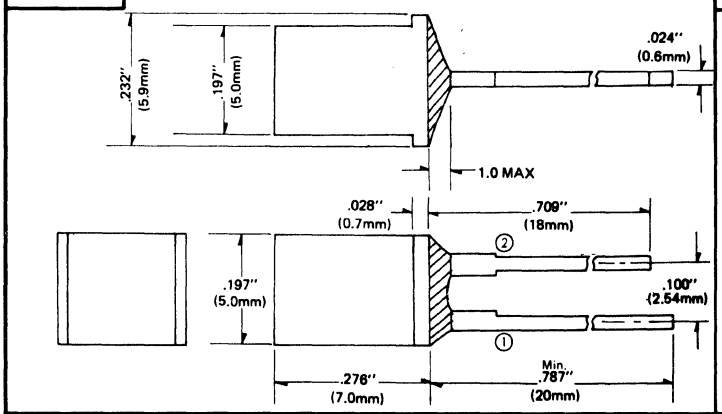

PD1267

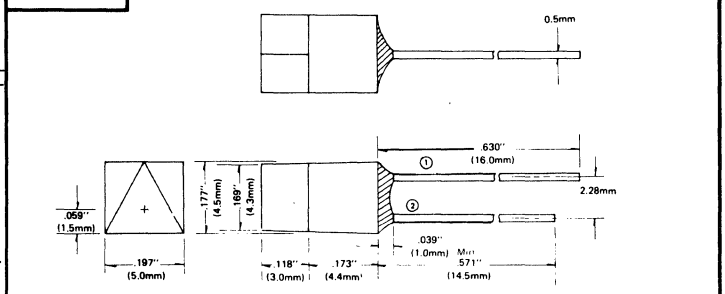

PD1268

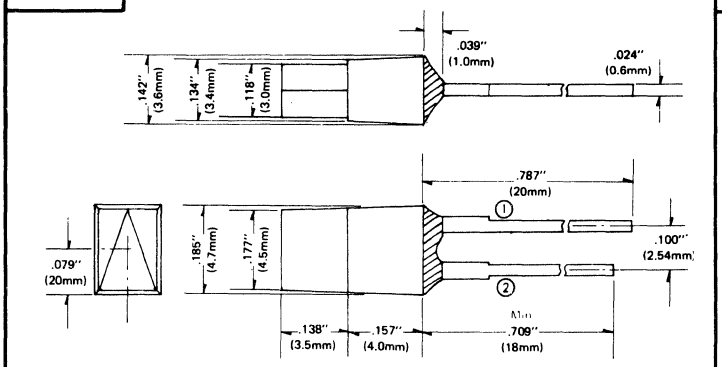

PD1269

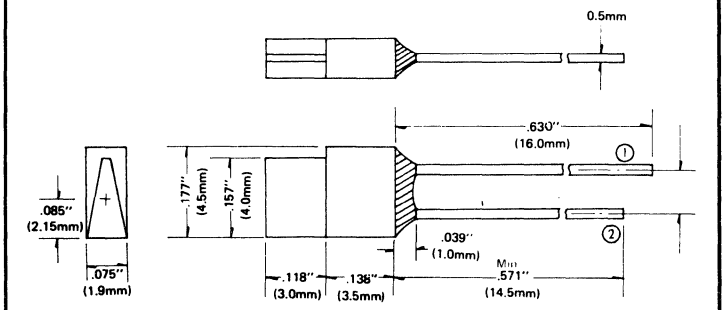

PD1270

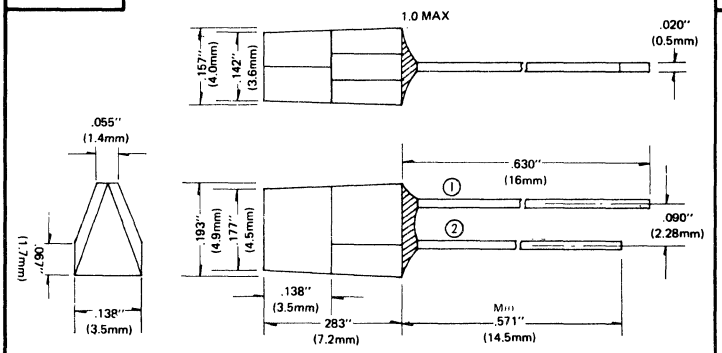

PD1271

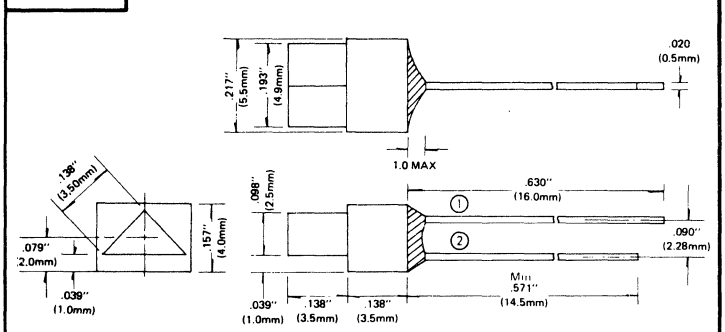

PD1272

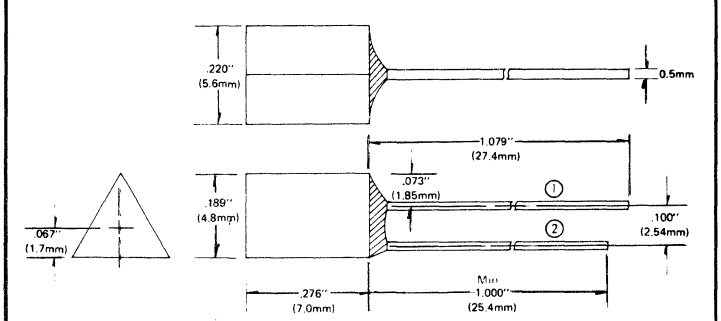

PD1273

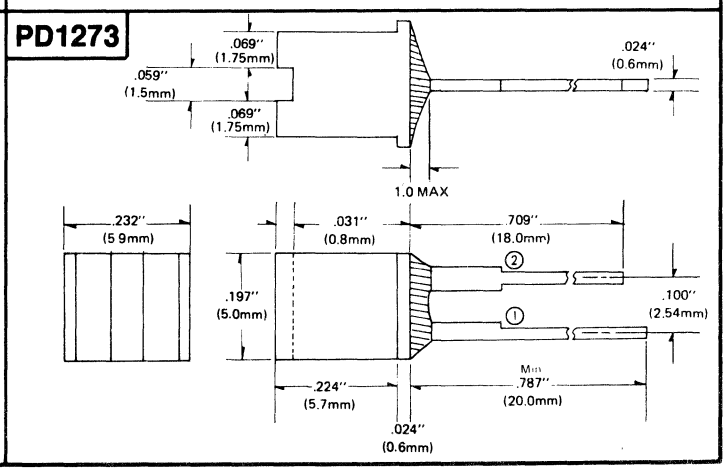

49. OUTLINE DRAWINGS

PD1274

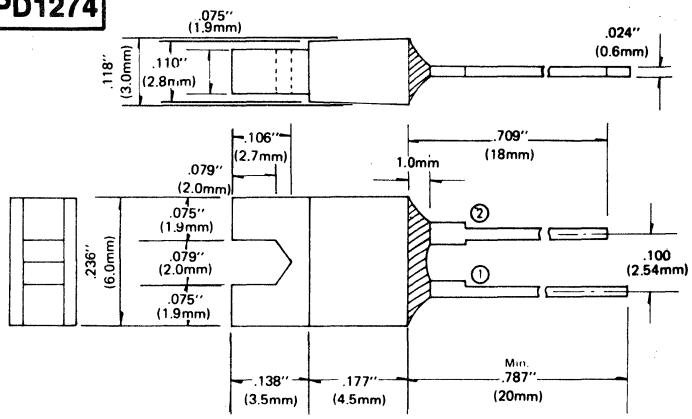

PD1275

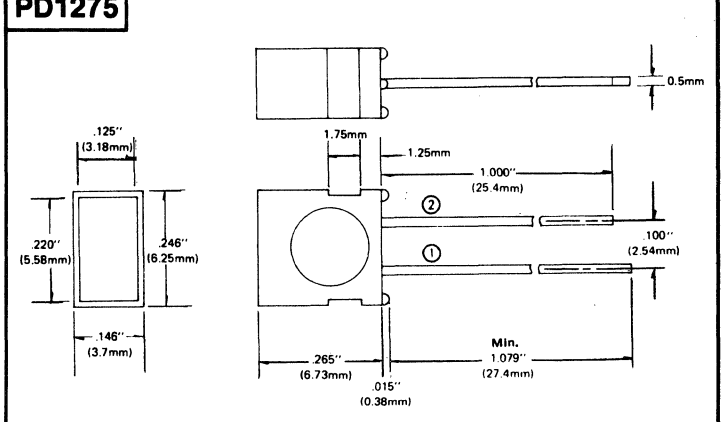

PD1276

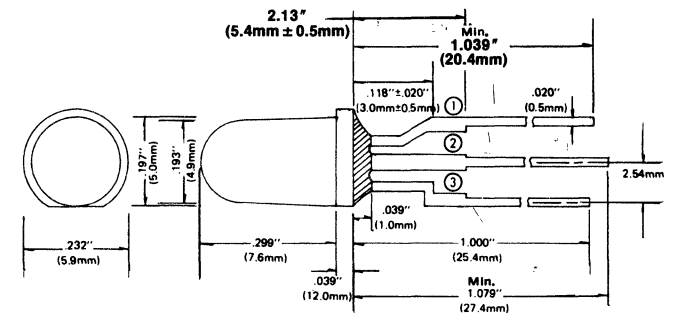

PD1277

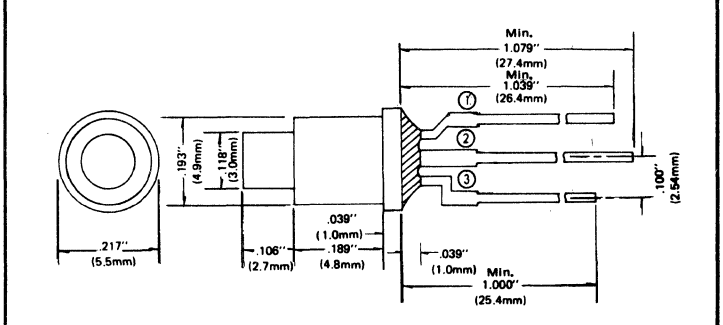

PD1278

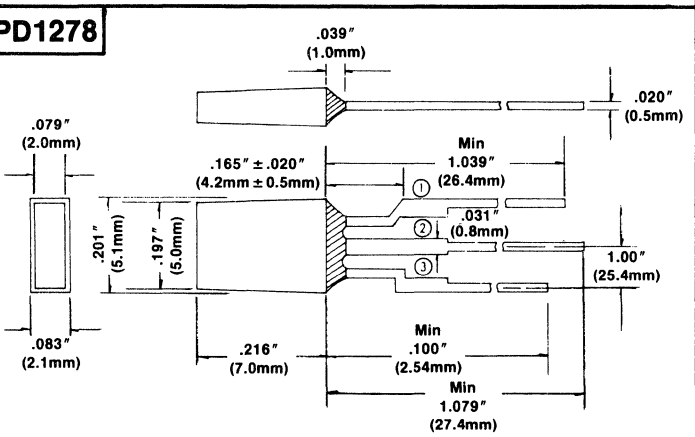

PD1279

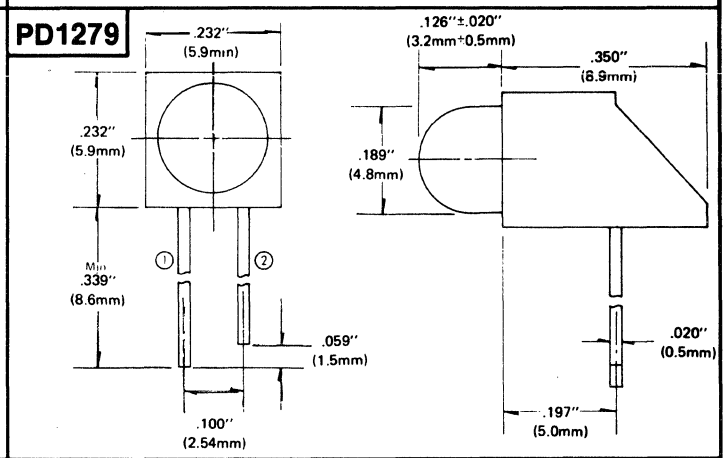

PD1280

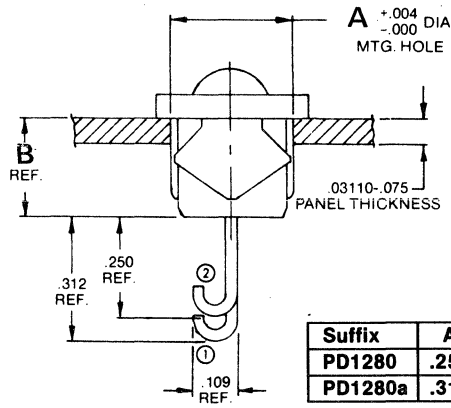

Suffix	A	B
PD1280	.250	.180
PD1280a	.312	.250

PD1281

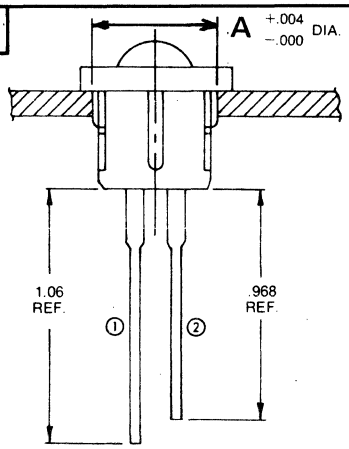

Suffix	A
PD1281	.250
PD1281a	.312

49. OUTLINE DRAWINGS

PD1282

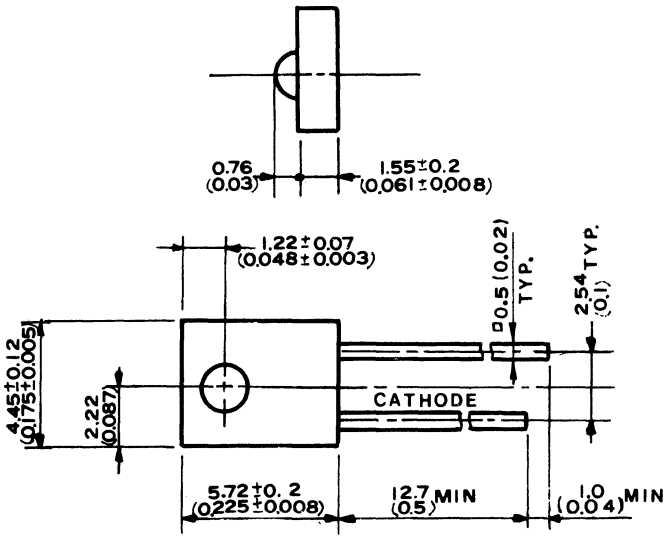

PD1282a- Long Lead Collector

PD1284

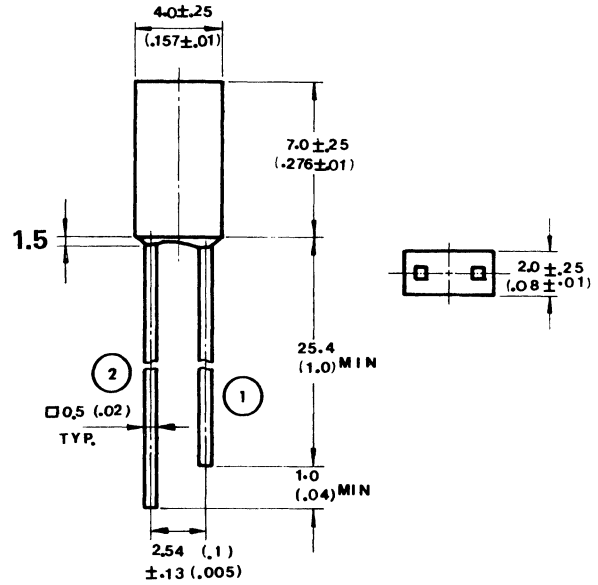

PD1283

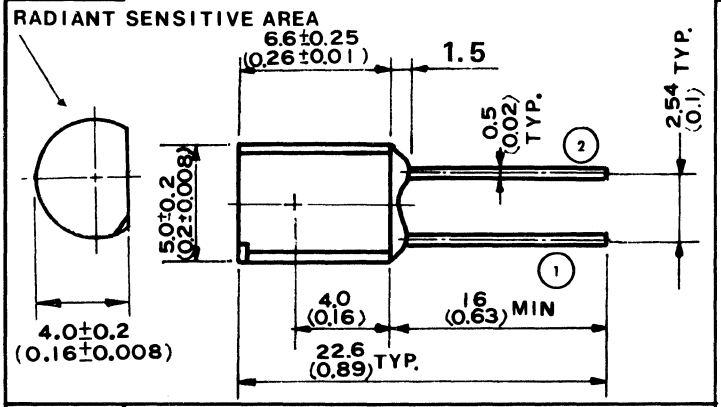

PD1285

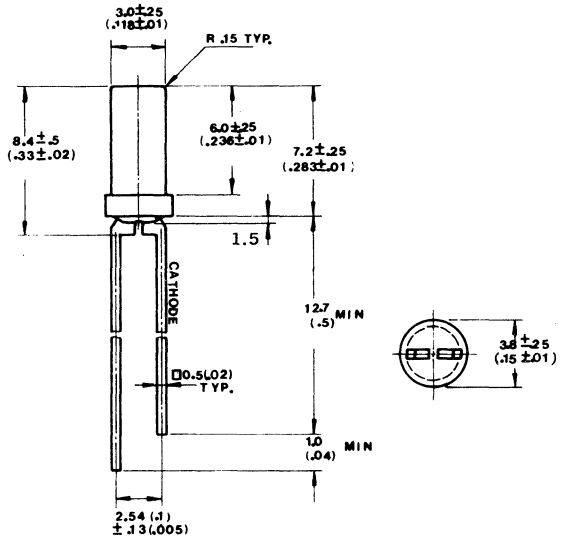

PD1287

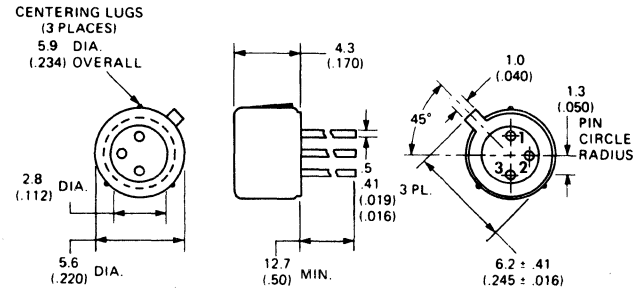

ALL DIMENSIONS IN MILLIMETERS (INCHES)

49. OUTLINE DRAWINGS

PD1286

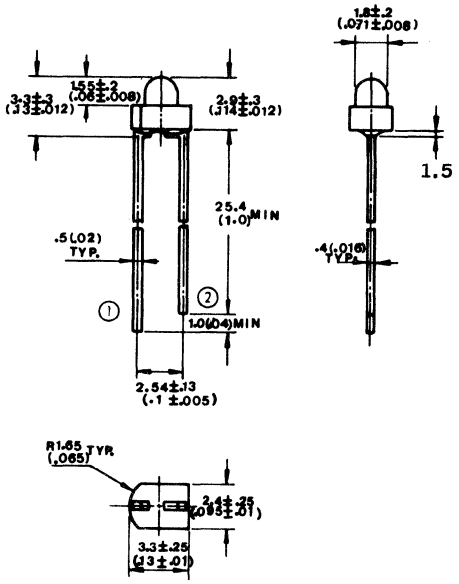

PD1290

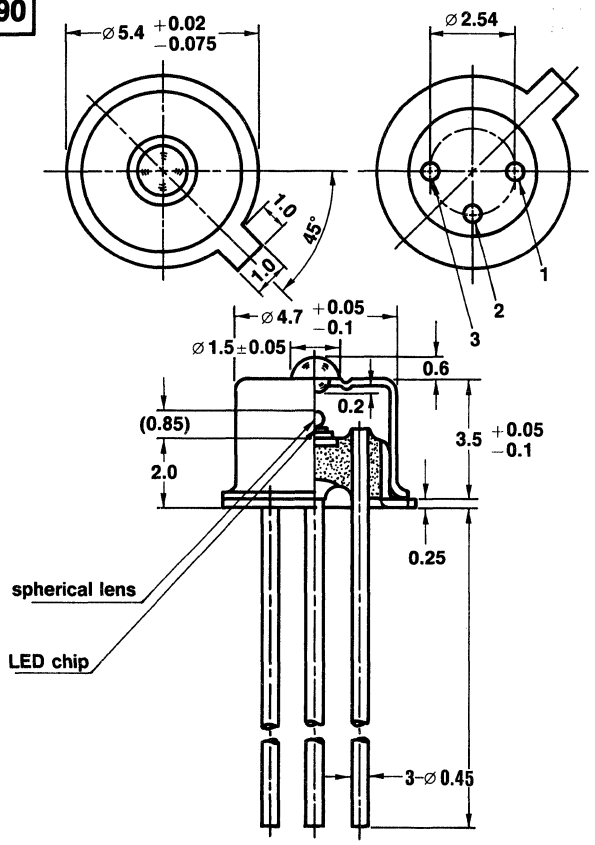

PD1288

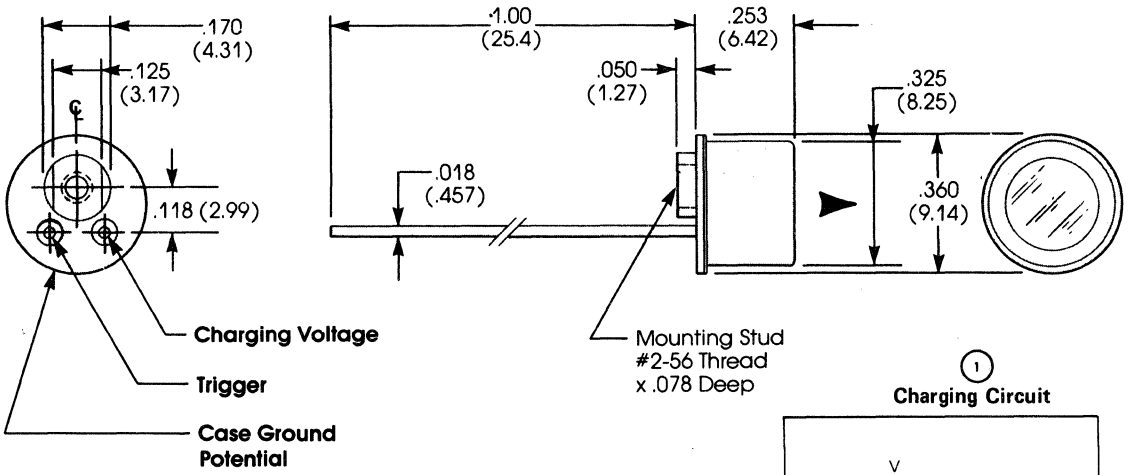

NOTE
1. Dimensions in inches, mm in parenthesis.

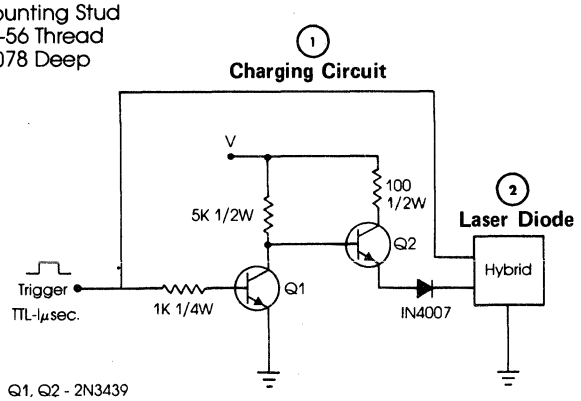

49. OUTLINE DRAWINGS

PD1289

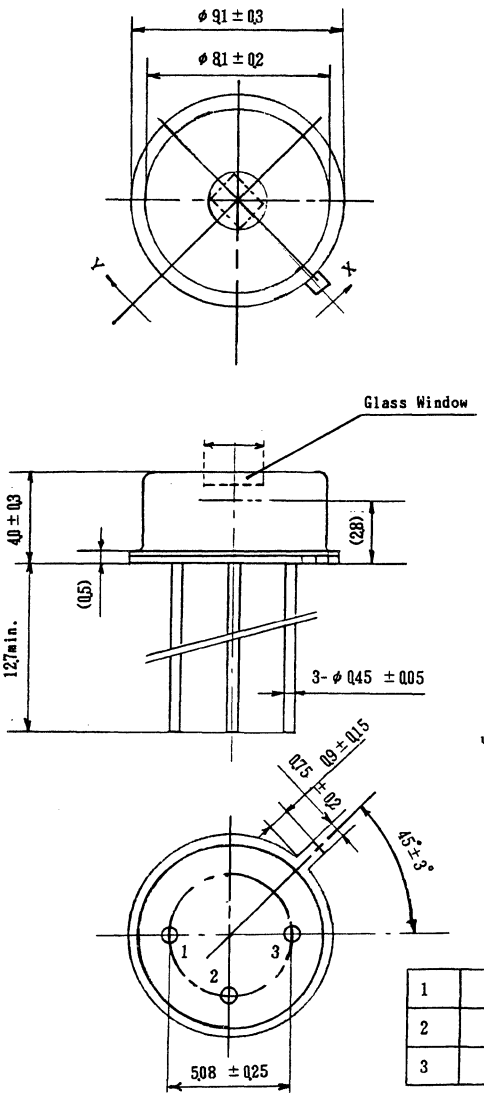

1	Cathode
2	Anode A
3	Anode B

DWG #	WINDOW DIA
PD1289	2.6 / 2.6
PD1289a	5.9 TYP

PD1289b

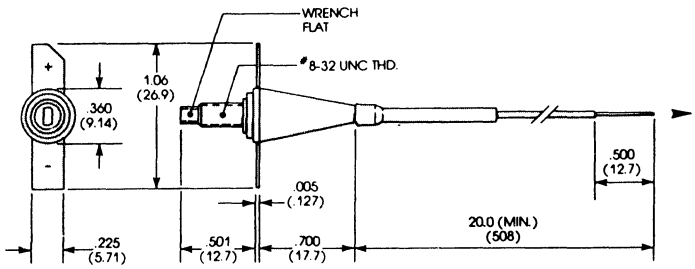

PD1292

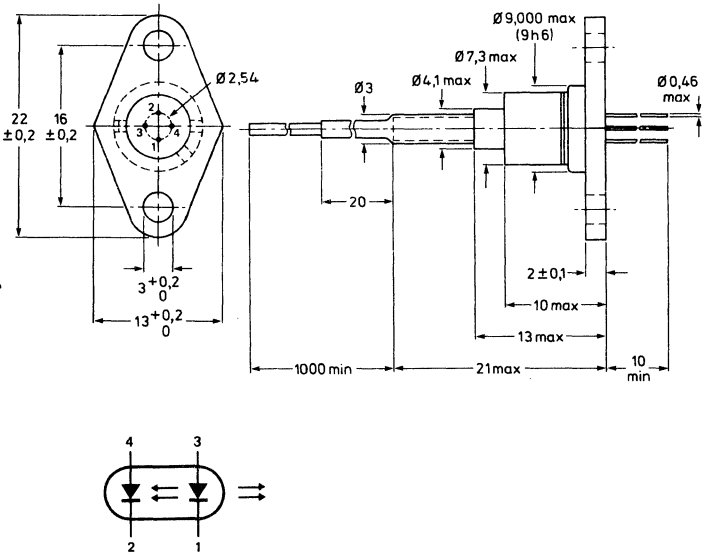

PD1291

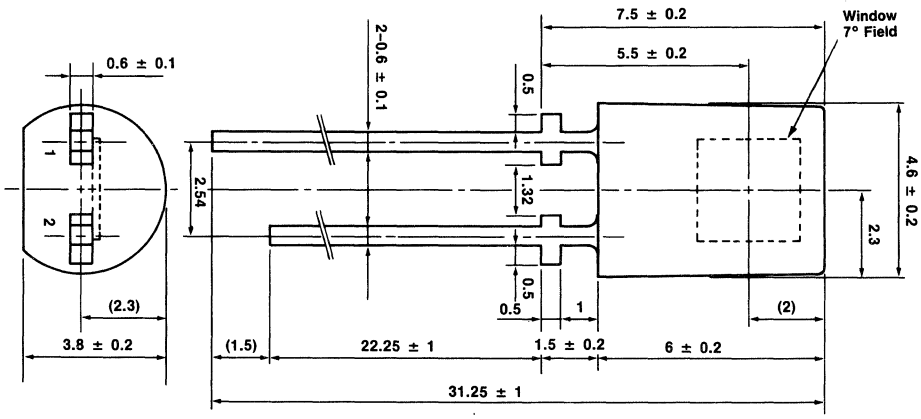

49. OUTLINE DRAWINGS

PD1293

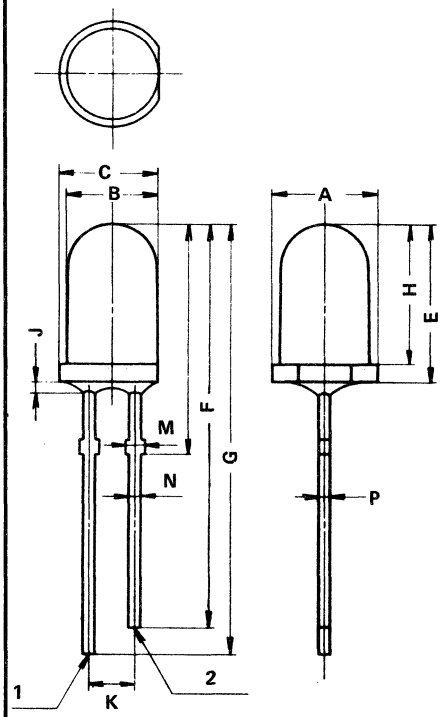

Unit :mm

Suffix	A	B	C	D	E	F	G	H	J	K	M	N	P
PD1293	3.4 3.8	2.8 3.2	3.2 3.6	10.0 11.0	5.8 6.2	19.0 21.0	20.5 22.5	4.8 5.2	1.5 MAX	2.3 2.7	0.5 0.9	0.3 0.7	0.3 0.7
PD1293a	5.6 6.0	4.8 5.2	5.2 5.6	12.2 13.2	8.2 9.2	21.2 23.2	22.7 24.7	7.2 8.2	1.5 MAX	2.3 2.7	0.9 1.3	0.4 0.8	0.4 0.8
PD1293b	5.6 6.0	4.8 5.2	5.2 5.6	11.3 12.3	7.8 8.2	20.3 22.3	22.7 24.7	6.3 6.7	1.5 MAX	2.3 2.7	0.9 1.3	0.4 0.8	0.4 0.8
PD1293c	5.6 6.0	4.8 5.2	5.2 5.6	12.2 13.2	8.5 8.9	31.2 33.2	32.7 34.7	7.5 7.9	1.5 MAX	2.3 2.7	0.9 1.3	0.4 0.8	0.4 0.8
PD1293d	5.6 6.0	4.8 5.2	5.6 5.6	11.5 12.5	7.8 8.2	30.5 32.5	32.0 34.0	6.3 6.7	1.5 MAX	2.3 2.7	0.9 1.3	0.4 0.8	0.4 0.8
PD1293e	4.4 4.8	3.8 4.2	4.1 4.5	10.0 11.0	5.8 6.2	19.0 21.0	20.5 22.5	4.3 4.7	1.5 MAX	2.3 2.7	0.5 0.9	0.3 0.7	0.3 0.7
PD1293f	5.6 6.0	4.8 5.2	5.2 5.6	11.3 12.3	7.8 8.2	20.3 22.3	21.8 23.8	6.3 6.7	1.5 MAX	2.3 2.7	0.9 1.3	0.4 0.8	0.4 0.8
PD1293g	5.2 5.6	4.8 5.2	5.6 6.0	10.6 11.6	7.8 8.2	19.6 21.6	21.1 23.1	6.3 6.7	2.0 MAX	2.3 2.7	0.9 1.3	0.4 0.8	0.4 0.8
PD1293h	5.6 6.0	5.2 5.6	4.9 5.1	11.7 13.7	8.5 8.9	31.2 33.2	32.7 34.7	7.5 7.9	1.5 MAX	2.3 2.7	0.9 1.3	0.4 0.8	0.4 0.8
PD1293j	5.2 5.6	5.6 6.0	4.8 5.2	10.6 11.6	7.8 8.2	29.6 31.6	31.1 33.1	6.3 6.7	2.0 MAX	2.3 2.7	0.9 1.3	0.4 0.8	0.4 0.8
PD1293k	3.3 3.7	3.6 4.0	2.9 3.2	9.0 10.0	4.8 5.2	18.0 20.0	19.5 21.5	3.4 3.6	1.5 MAX	2.3 2.7	0.5 0.9	0.3 0.7	0.3 0.7
PD1293m	3.3 3.7	3.6 4.0	2.9 3.2	9.0 10.0	4.8 5.2	28.0 30.0	29.5 31.5	3.4 3.6	1.5 MAX	2.3 2.7	0.5 0.9	0.3 0.7	0.3 0.7
PD1293n	5.6 6.0	5.2 5.6	4.8 5.2	12.2 13.2	8.5 8.9	39.7 41.7	41.7 43.7	7.5 7.9	1.5 MAX	2.3 2.7	0.9 1.3	0.3 0.7	0.3 0.7
PD1293p	5.6 6.0	5.2 5.6	4.8 5.2	11.5 12.5	7.9 8.2	39.0 41.0	41.0 43.0	6.3 6.7	1.5 MAX	2.3 2.7	0.9 1.3	0.3 0.7	0.3 0.7
PD1293q	5.6 6.0	5.2 5.6	4.8 5.2	12.2 13.2	8.5 8.9	31.2 33.2	32.7 34.7	7.5 7.9	1.5 MAX	2.3 2.7	0.9 1.3	0.4 0.8	0.4 0.8
PD1293r	5.2 5.6	5.6 6.0	4.8 5.2	10.6 11.6	7.8 8.2	29.6 31.6	31.1 33.1	6.3 6.7	2.0 MAX	2.3 2.7	0.9 1.3	0.4 0.8	0.4 0.8

PD1298

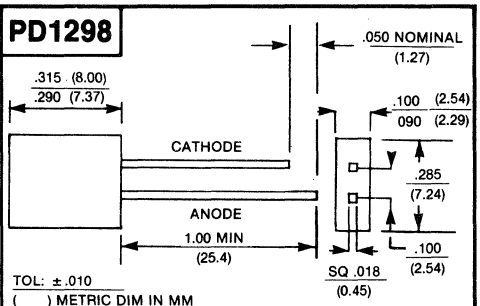

TOL: ±.010
( ) METRIC DIM IN MM

AN EPOXY MENISCUS MAY EXTEND ABOUT .040 (1 mm) DOWN THE LEADS

PD1303

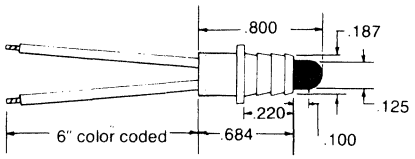

PD1294

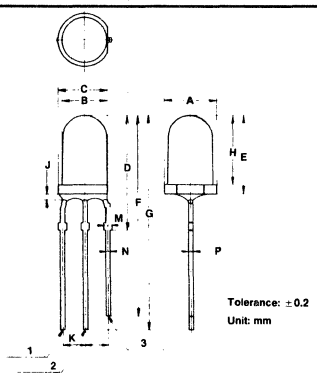

Suffix	A	B	C	D	E	F	G	H	J	K	M	N	P	S	LEAD LENGTH
PY1294	5.6 6.0	4.8 5.2	5.2 5.6	12.2 13.2	8.5 8.9	21.2 23.2	22.7 24.7	7.5 7.9	1.5 MAX	2.3 2.7	0.95 MIN	0.3 0.7	0.3 0.7	2.3 2.7	13 MIN

PD1297

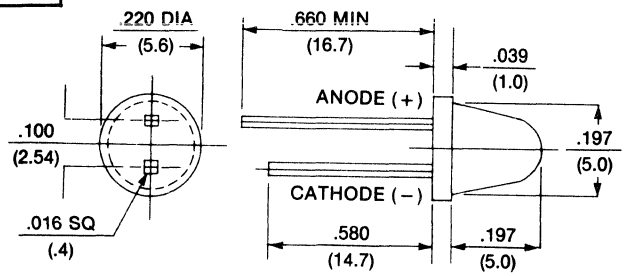

TOL: ±.010
( ) METRIC DIM IN MM

PD1296

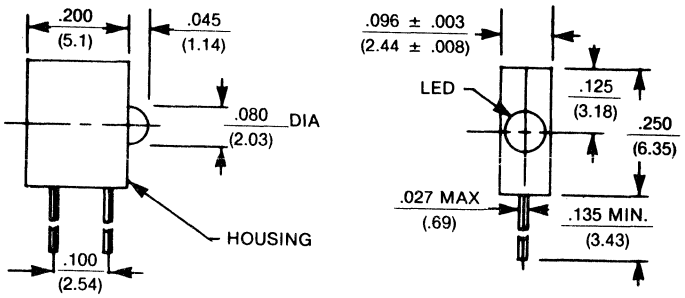

TOL: ±.010
( ) METRIC DIM IN MM

PD1299

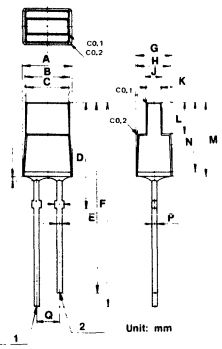

Suffix	A	B	C	D	E	F	G	H	J	K	L	M	N	P	Q
PD1299	5.2 5.6	4.7 4.9	5.5 5.7	11.2 12.2	19.0 22.0	21.5 23.5	3.8 4.2	3.5 3.7	1.6 2.0	1.5 1.7	3.4 3.6	7.9 8.5	7.6 7.8	0.4 0.8	2.3 2.7
PD1299a	5.2 5.6	4.7 4.9	5.5 5.7	11.2 12.2	38.7 40.7	40.7 42.7	3.8 4.2	3.5 3.7	1.6 2.0	1.5 1.7	3.4 3.6	7.9 8.5	7.6 7.8	0.3 0.7	2.3 2.7

49. OUTLINE DRAWINGS

PD1295

Dimensions in mm

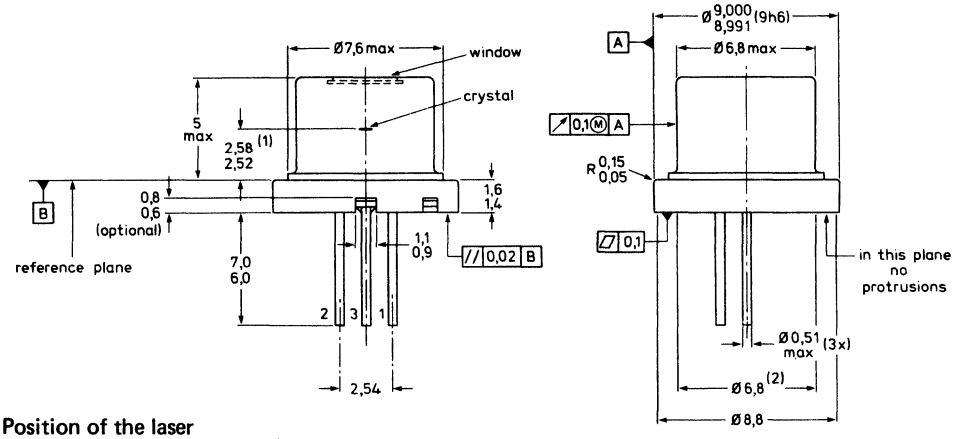

(1) Position of the laser crystal from the reference plane.

(2) Within the plane of ϕ 6,8 protrusions and irregularities are permitted.

(3) The positional accuracy of the laser stripe with respect to the flange diameter.

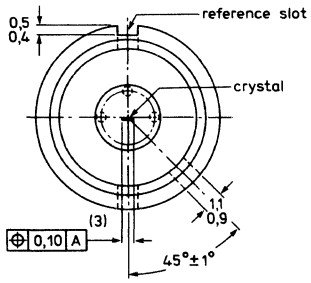

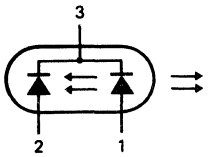

PD1300

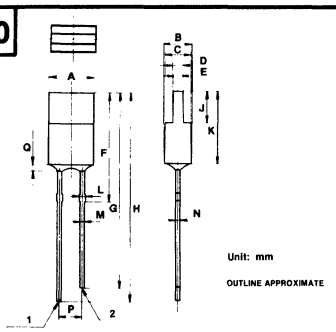

Suffix	A	B	C	D	E	F	G	H	J	K	L	M	N	P	Q
PD1300	4.9	2.8	2.6	1.0	0.9	11.5	20.5	22.0	3.3	7.8	0.5	0.3	0.3	2.3	1.5
	5.1	3.2	3.0	1.2	1.1	12.5	22.5	23.0	3.7	8.2	0.9	0.7	0.7	2.7	MAX
PD1300a	4.9	2.6	2.0	1.9		11.3	20.3	21.8	6.15	8.0	0.9	0.4	0.4	2.3	1.5
	5.1	3.0	2.2	2.1		12.3	22.3	23.8	6.35	MAX	1.3	0.8	0.8	2.7	MAX
PD1300b	4.9	2.6	2.0	1.9		11.3	39.2	41.2	6.15	7.7	0.9	0.3	0.3	2.3	1.5
	5.1	3.0	2.2	2.1		12.3	41.2	43.2	6.35	8.3	1.3	0.7	0.7	2.7	MAX

PD1301

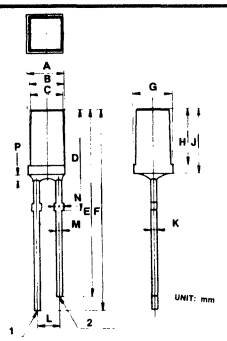

Suffix	A	B	C	D	E	F	G	H	J	K	L	M	N	P
PD1301	3.9	3.6	3.4	10.7	19.7	21.2	4.2	6.0	7.0	0.4	2.3	0.4	0.9	1.5
	4.2	4.0	3.8	11.7	21.7	23.2	4.6	6.4	7.4	0.8	2.7	0.8	1.3	MAX

PD1302

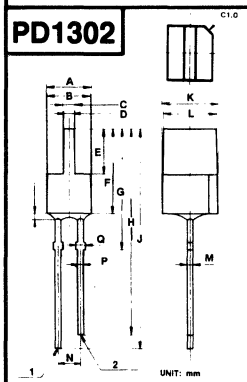

Suffix	A	B	C	D	E	F	G	H	J	K	L	M	N	P	Q
PD1302	4.8	4.6	1.2	1.1	4.8	9.1	13.8	21.8	23.3	6.0	5.8	0.4	2.3	0.4	0.9
	5.2	5.0	1.4	1.3	5.2	9.5	12.8	23.8	25.3	6.2	6.0	0.8	2.7	0.8	1.3
PD1302a	4.8	4.6	2.4	2.3	3.4	7.8	11.0	38.5	40.5	7.45	7.3	0.3	2.3	0.3	0.9
	5.2	5.0	2.6	2.5	3.6	8.2	12.0	40.5	42.5	7.6	7.5	0.7	2.7	0.7	1.3

PD1305

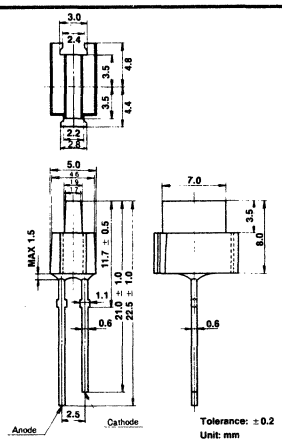

49. OUTLINE DRAWINGS

PD1304

ALL DIMENSIONS ARE NOMINAL

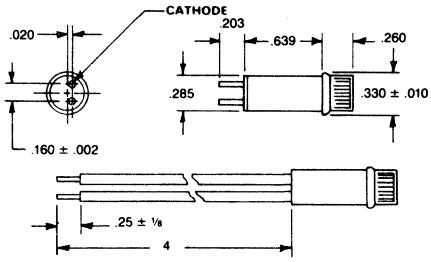

	Lead Termination	Ordering Info
PD1304	Shown	See Manufacturers' Device Numbering Keys (Section 50) - under LWE.
PD1304a	22 AWG 4" color coded lead stripped to ¼", standard (other leads available)	
PD1304b	Stainless polarized bi-pins	
PD1304c	P.C. Board bi-pins	

PD1306

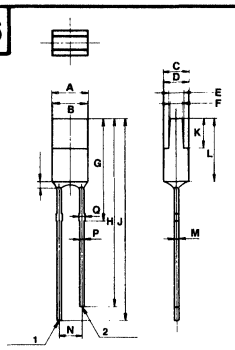

UNIT: mm

Suffix	A	B	C	D	E	F	G	H	J	K	L	M	N	P	Q
PD1306	3.7	3.7	2.6	2.45	1.55	1.3	11.8	19.8	21.3	3.1	6.8	0.3	2.3	0.3	0.5
	4.1	3.9	3.0	2.85	1.75	1.5	10.8	21.8	23.3	3.5	7.2	0.7	2.7	0.7	0.9

PD1307

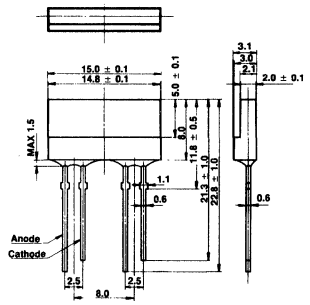

Tolerance: ±0.2
Unit: mm

PD1308

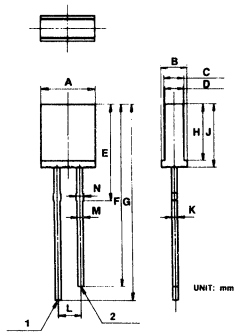

UNIT: mm

Suffix	A	B	C	D	E	F	G	H	J	K	L	M	N
PD1308	5.9	2.6	2.0	1.9	10.2	19.2	20.7	6.15	6.5	0.4	2.3	0.4	0.8
	6.1	3.0	2.2	2.1	11.2	21.2	22.7	6.35	7.5	0.8	2.7	0.8	1.0

PD1309

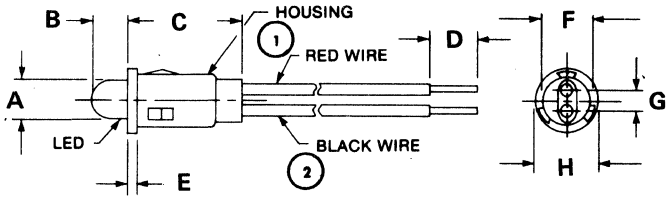

	A	B	C	D	E	F	G	H	Wire Length
PD1309	.190	.165	.550	.365	.030	.235	.095	.271	6.00
	.210	.185	.570	.385	TYP	.255	TYP	.291	
PD1309a	.190	.148	.562	.365	.093	.235	.090	.282	6.00
	.210	.168	.582	.385	TYP	.255	.110	.302	

PD1310

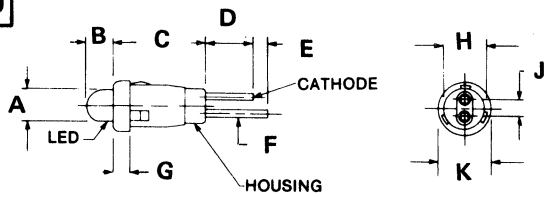

	A	B	C	D	E	F	G	H	J	K
PD1310	.190	.148	.562	.300	.050	.020	.093	.235	.090	.282
	.210	.168	.582	MIN	MIN	SQ	TYP	.255	.110	.302

PD1311

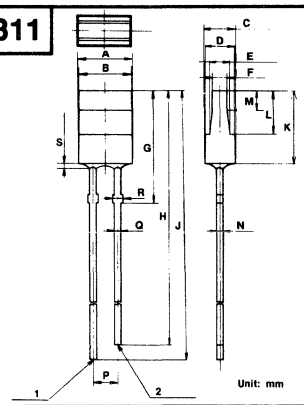

Unit: mm

	A	B	C	D	E	F	G	H	J	K	L	M	N	P	Q	R	S
PD1311	5.3	5.2	3.0	2.8	1.9	1.33	11.0	30.0	31.5	7.3	4.4	2.0	0.4	2.3	0.4	0.9	1.5
	5.5	5.4	3.4	3.2	2.1	1.53	12.0	32.0	33.5	7.6	4.6	2.2	0.8	2.7	0.8	1.3	MAX

49. OUTLINE DRAWINGS

PD1312

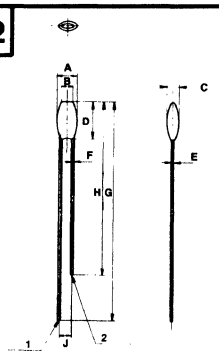

Suffix	A	B	C	D	E	F	G	H	J
PD1312	1.3	0.7	1.3	2.5	0.1	0.1	12.5	9.5	0.7
	MAX	0.9	MAX	2.8	0.3	0.3	16.5	13.5	0.9
PD1312a	1.3	0.7	1.3	2.0	0.1	0.1	23.0	21.0	0.7
	MAX	0.9	MAX	2.5	0.3	0.3	27.0	25.0	0.9

PD1313

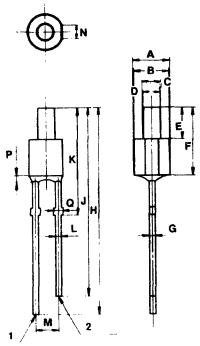

Unit: mm

Suffix	A	B	C	D	E	F	G	H	J	K	L	M	N	P	Q
PD1313	3.8	3.7	1.7	1.6	3.3	7.2	0.4	21.8	19.8	11.3	0.4	2.3	1.3	1.5	0.9
	4.2	4.1	2.1	2.0	3.7	7.8	0.8	23.8	21.8	12.3	0.8	2.7	1.7	MAX	1.3

PD1314

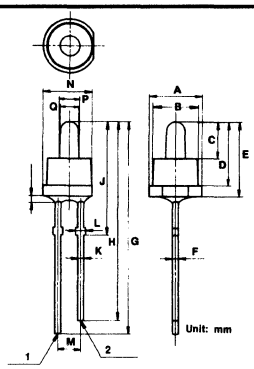

Unit: mm

Suffix	A	B	C	D	E	F	G	H	J	K	L	M	N	P	Q
PD1314	5.6	4.8	3.8	6.8	8.0	0.4	22.4	20.9	11.9	0.4	0.9	2.3	5.2	2.1	1.9
	6.0	5.2	4.2	7.2	8.4	0.8	24.4	22.9	12.9	0.8	1.3	2.7	5.6	MAX	2.1

PD1315

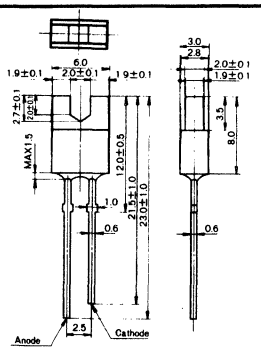

Tolerance:±0.2
Unit mm

PD1316

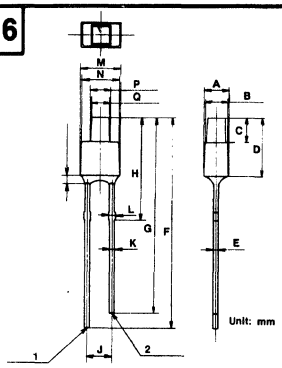

Unit: mm

Suffix	A	B	C	D	E	F	G	H	J	K	L	M	N	P	Q
PD1316	2.3	2.3	2.4	5.8	0.3	20.5	19.0	10.0	2.3	0.3	0.5	3.8	3.7	1.7	1.7
	2.7	2.5	2.6	6.2	0.7	22.5	21.0	11.0	2.7	0.7	0.9	4.2	4.1	2.1	1.9

PD1317

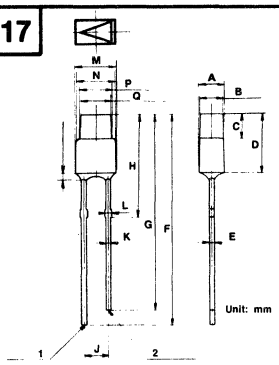

Unit: mm

Suffix	A	B	C	D	E	F	G	H	J	K	L	M	N	P	Q
PD1317	2.3	2.3	2.4	5.8	0.3	20.5	19.0	10.0	2.3	0.3	0.5	4.0	4.0	3.1	3.1
	2.7	2.5	2.6	6.2	0.7	22.5	21.0	11.0	2.7	0.7	0.9	4.4	4.2	3.5	3.3

PD1318

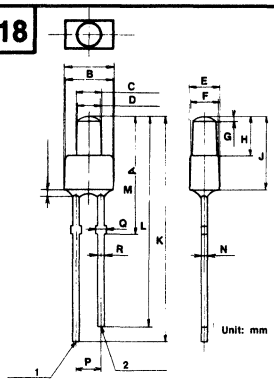

Unit: mm

Suffix	A	B	C	D	E	F	G	H	J	K	L	M	N	P	Q	R
PD1318	4.8	4.7	2.4	2.3	2.8	2.8	0.3	3.9	7.3	22.0	20.5	11.5	0.4	2.3	0.9	0.4
	5.2	5.1	2.6	2.5	3.2	3.0	0.7	4.1	7.7	24.0	22.5	12.5	0.8	2.7	1.3	0.8

PD1319

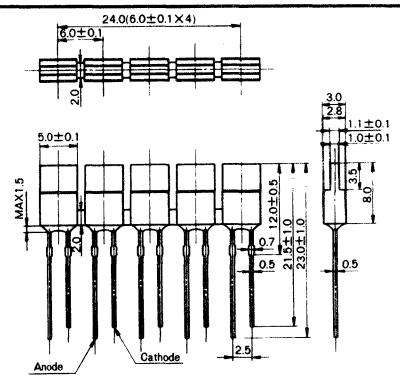

Tolerance:±0.2
Unit :mm

49. OUTLINE DRAWINGS

PD1320

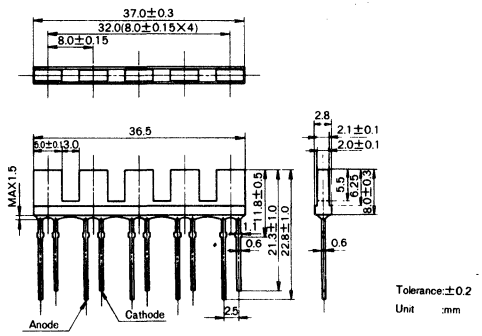

PD1321

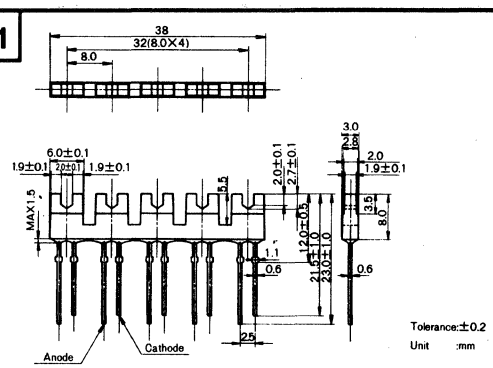

PD1322

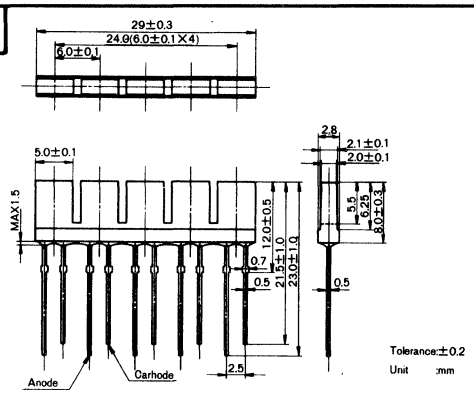

PD1323

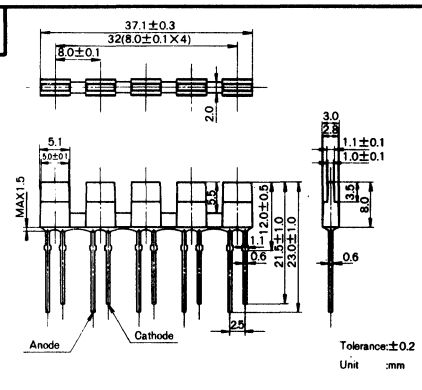

PD1324

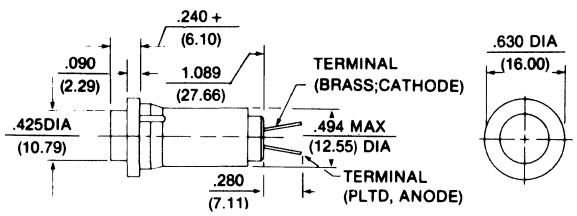

PD1324 HI-HAT LENS
PD1324a FLUSH LENS

PD1325

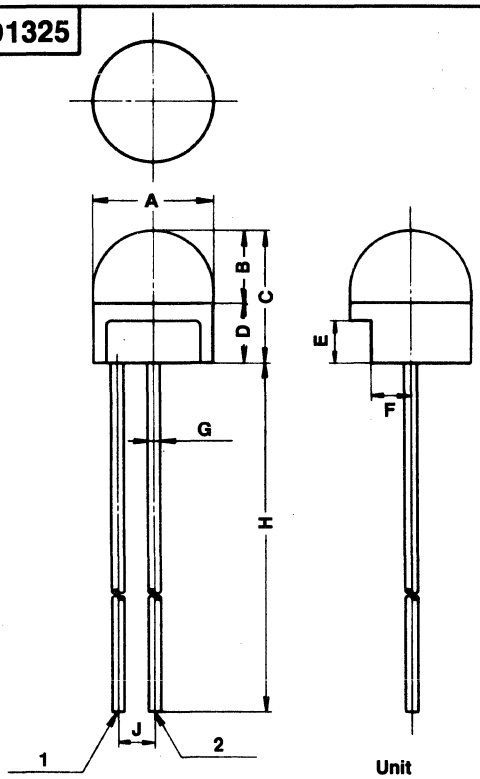

Unit :mm

	A	B	C	D	E	F	G	H	J	K
PD1325	3.8 / 4.2	2.2 / 2.6	3.9 / 4.9	1.8 / 2.2	1.2 / 1.6	1.1 / 1.5	0.40 / 0.50	12.7 / 13.7	1.0 / 1.4	1.0 / 1.4

49. OUTLINE DRAWINGS

PD1326

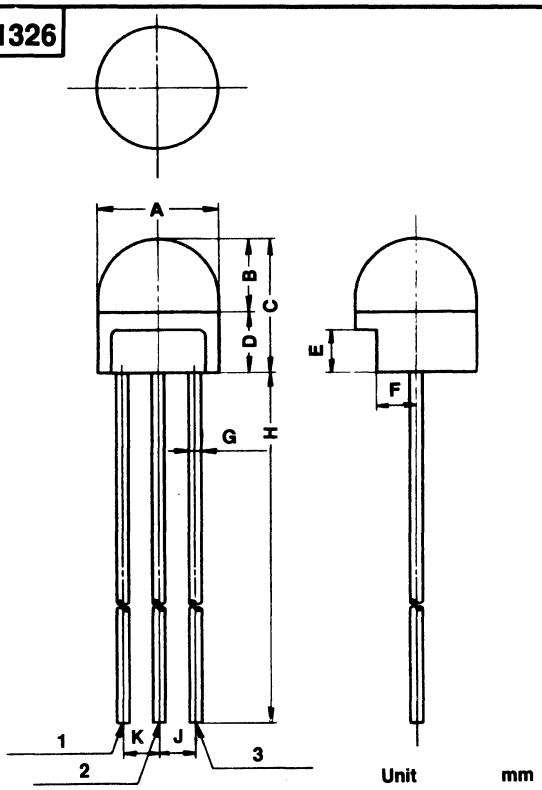

	A	B	C	D	E	F	G	H	J
PD1326	3.8	2.2	3.9	1.8	1.2	1.1	0.40	12.7	1.0
	4.2	2.6	4.9	2.2	1.6	1.5	0.50	13.7	1.4
PD1325a	3.8	2.2	3.9	1.8	1.2	1.1	0.40	22.7	1.0
	4.2	2.6	4.9	2.2	1.6	1.5	0.50	23.7	1.4

PD1327

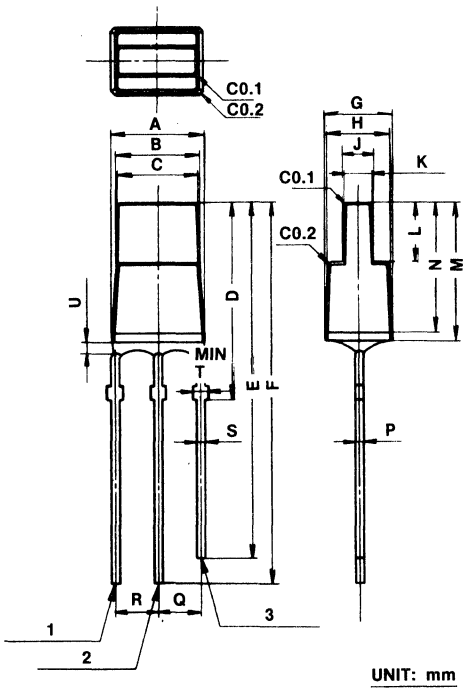

Suffix	A	B	C	D	E	F	G	H	J	K	L	M	N	P	Q	R	S	T	U
PD1327	5.2	4.7	4.5	11.2	20.0	21.5	3.8	3.5	1.6	1.5	3.4	7.9	7.6	0.3	2.3	2.3	0.3	0.95	1.5
	5.6	4.9	4.7	12.2	22.0	23.5	4.2	3.7	2.0	1.7	3.6	8.5	7.8	0.7	2.7	2.7	0.7	MIN	MAX

PD1328

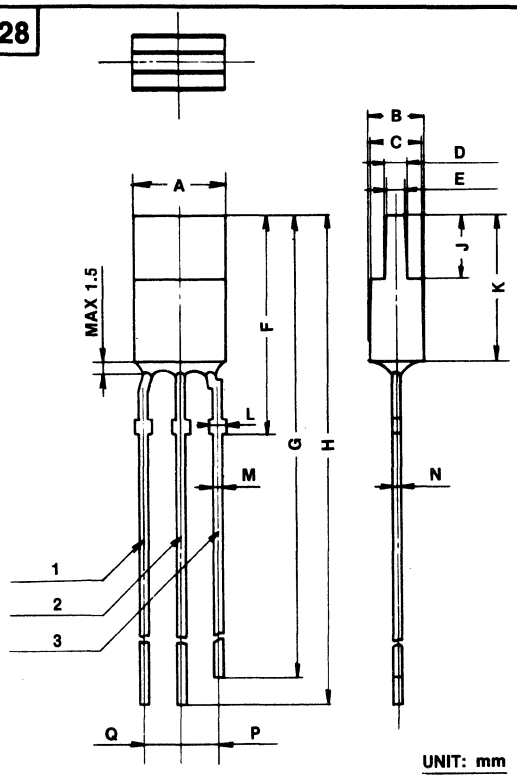

Suffix	A	B	C	D	E	F	G	H	J	K	L	M	N	P	Q
PD1328	4.9	2.9	2.6	1.0	0.9	11.5	30.5	32.0	3.3	7.8	0.8	0.3	0.3	1.8	1.8
	5.1	3.1	3.0	1.2	1.1	12.5	32.5	34.0	3.7	8.2	1.2	0.7	0.7	2.2	2.2

PD1329

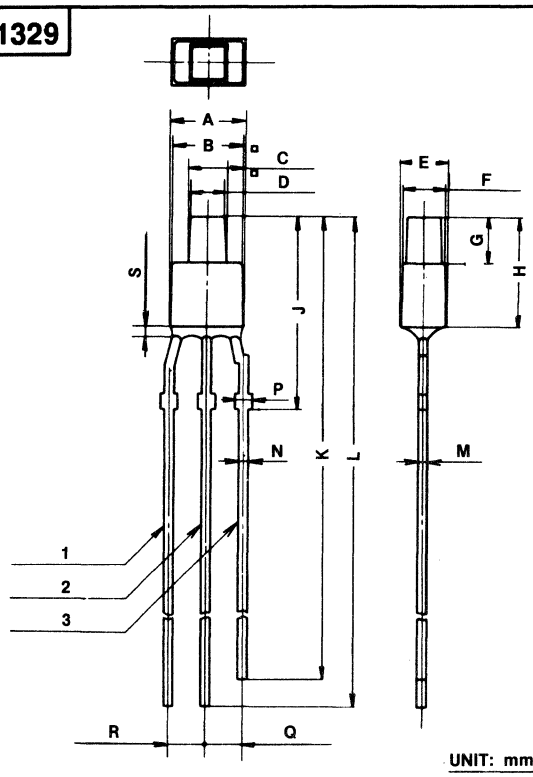

Suffix	A	B	C	D	E	F	G	H	J	K	L	M	N	P	Q	R	S
PD1329	3.8	3.7	1.8	1.7	2.3	2.3	2.4	5.8	10.0	29.0	30.5	0.3	0.3	0.8	1.6	1.6	1.5
	4.2	4.1	2.0	1.9	2.7	2.5	2.6	6.2	11.0	31.0	32.5	0.7	0.7	1.2	2.4	2.4	MAX

49. OUTLINE DRAWINGS

PD1330

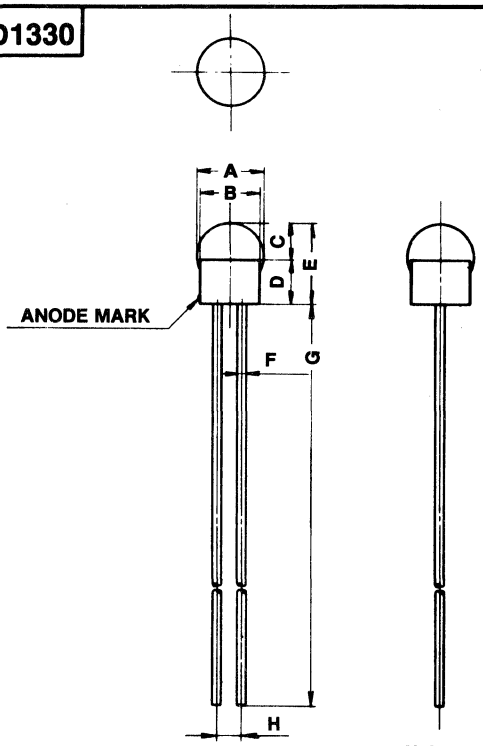

Unit :mm

	A	B	C	D	E	F	G	H
PD1330	2.28 MAX	1.8 2.2	1.3 1.7	1.3 1.7	3.0 MAX	0.22 0.38	15.5 16.5	0.73 0.77

PD1331

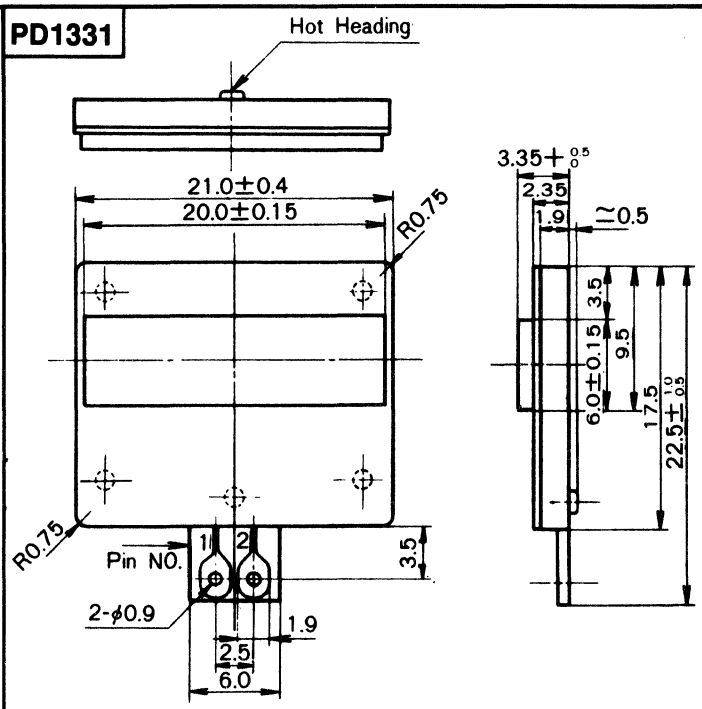

Pin NO.	Address
1	Anode
2	Cathode

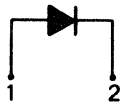

Tolerance:±0.25

Unit :mm

PD1332

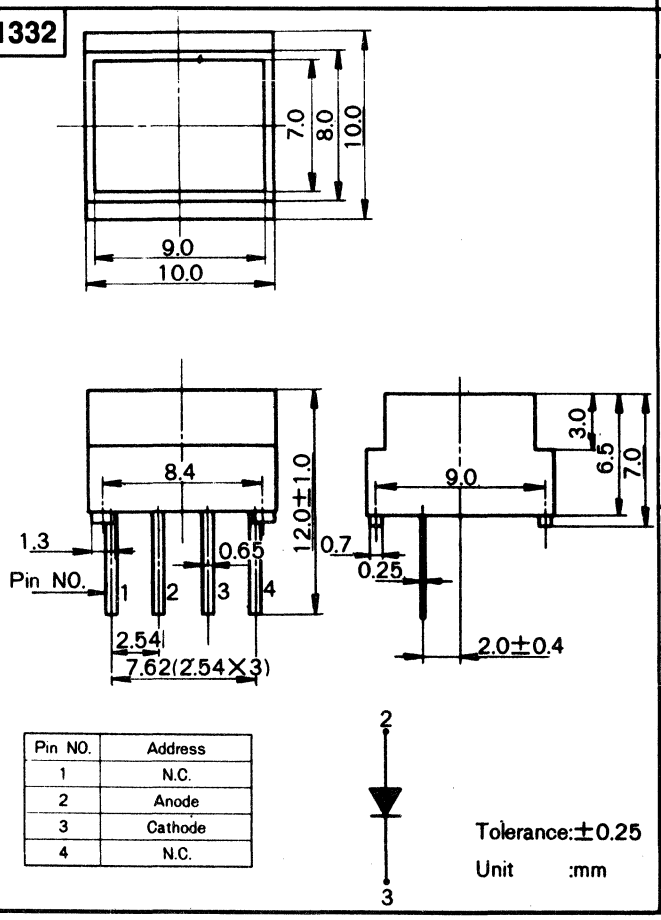

Pin NO.	Address
1	N.C.
2	Anode
3	Cathode
4	N.C.

Tolerance:±0.25

Unit :mm

PD1333

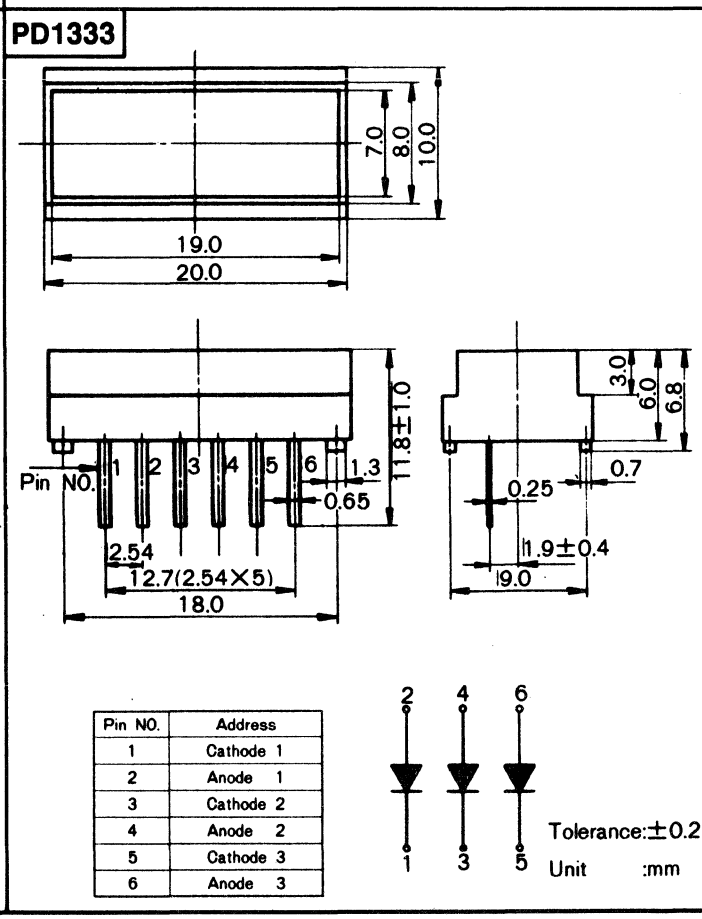

Pin NO.	Address
1	Cathode 1
2	Anode 1
3	Cathode 2
4	Anode 2
5	Cathode 3
6	Anode 3

Tolerance:±0.25

Unit :mm

49. OUTLINE DRAWINGS

PD1369

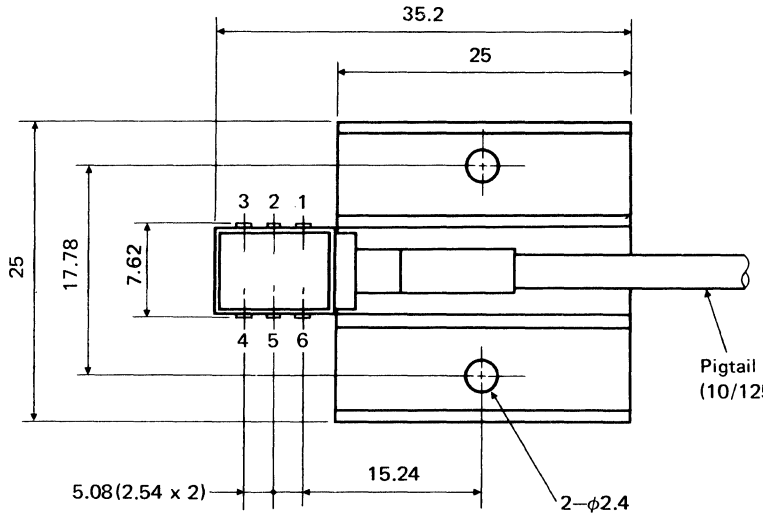

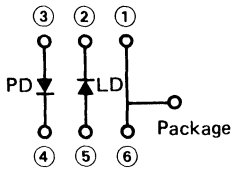

① Package Ground
② LD Cathode (-)
③ PD Anode (-)
④ PD Cathode (+)
⑤ LD Anode (+)
⑥ Package Ground

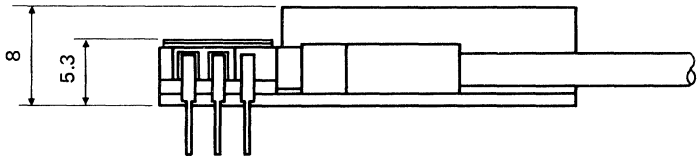

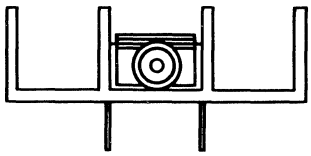

PD1370

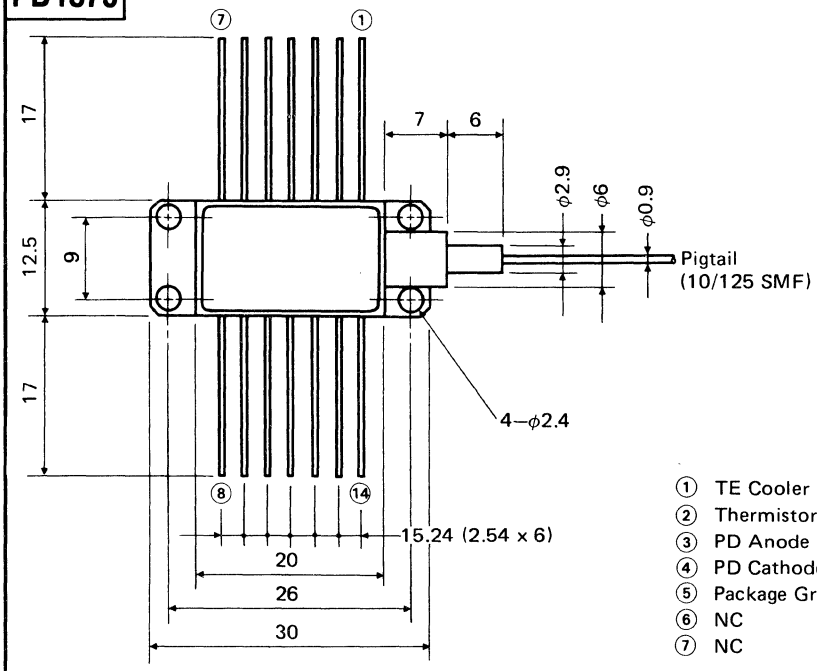

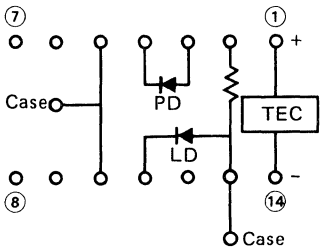

① TE Cooler (+; for cooling)
② Thermistor
③ PD Anode
④ PD Cathode
⑤ Package Ground
⑥ NC
⑦ NC
⑧ NC
⑨ NC
⑩ Package Ground
⑪ LD Cathode
⑫ NC
⑬ Package Ground, LD Anode Thermistor
⑭ TE Cooler (-; for cooling)

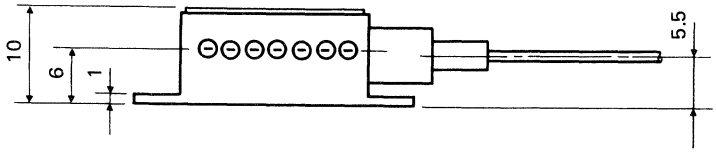

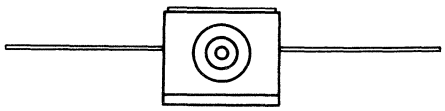

49. OUTLINE DRAWINGS

PD1334

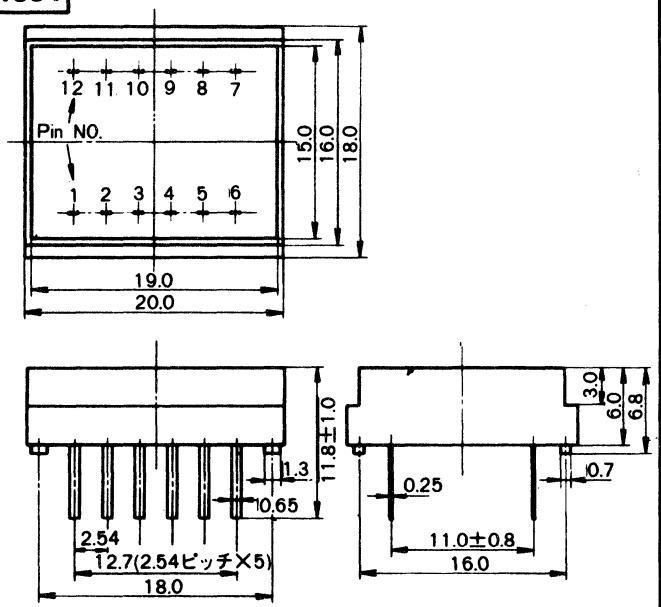

Tolerance:±0.25

Unit :mm

Pin NO.	Address	Pin NO.	Address
1	Cathode 1	7	Cathode 4
2	Anode 1	8	Anode 4
3	Cathode 2	9	Cathode 5
4	Anode 2	10	Anode 5
5	Cathode 3	11	Cathode 6
6	Anode 3	12	Anode 6

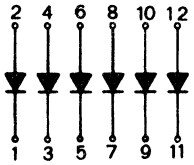

PD1335

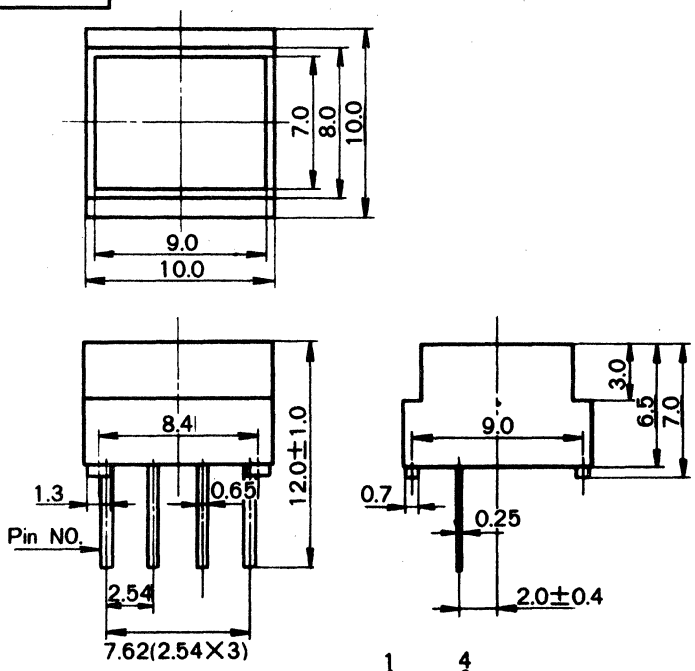

Pin NO.	Address
1	Green LED Anode
2	〃 〃 Cathode
3	Red LED Cathode
4	〃 〃 Anode

Tolerance:±0.25

Unit :mm

PD1338

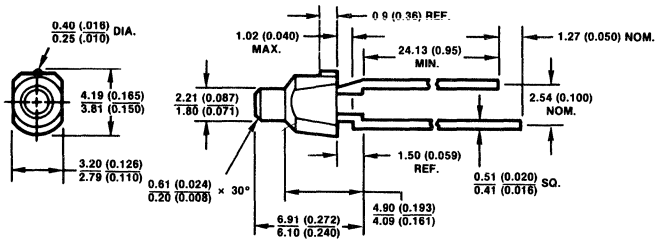

PD1339

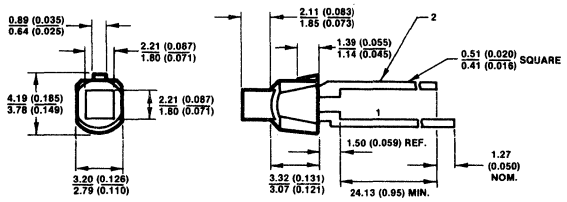

NOTES:
1. ALL DIMENSIONS ARE IN MILLIMETERS (INCHES).
2. AN EPOXY MENISCUS MAY EXTEND ABOUT 1 mm (0.040") DOWN THE LEADS.

PD1336

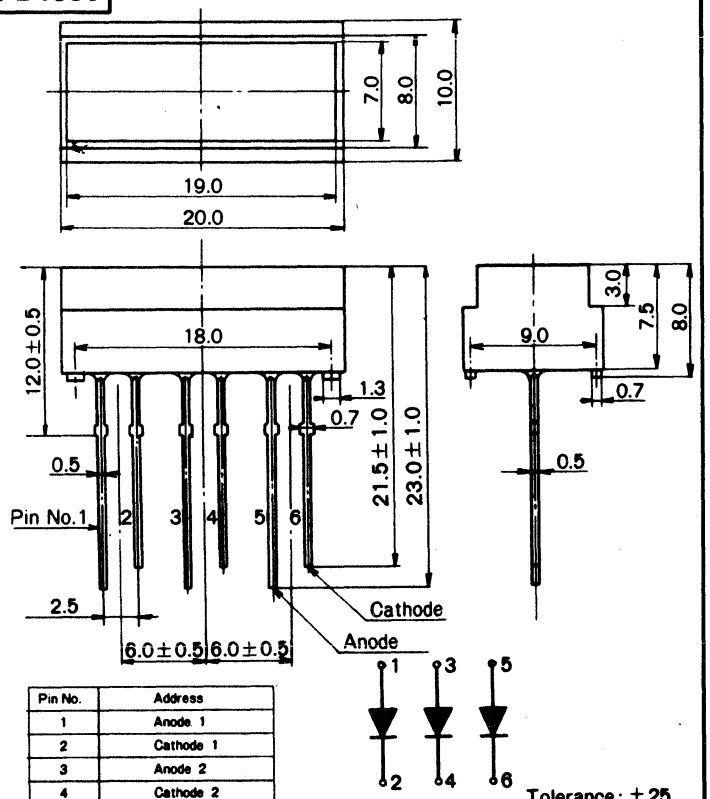

Pin No.	Address
1	Anode 1
2	Cathode 1
3	Anode 2
4	Cathode 2
5	Anode 3
6	Cathode 3

Tolerance: ±25

Unit :mm

49. OUTLINE DRAWINGS

PD1340

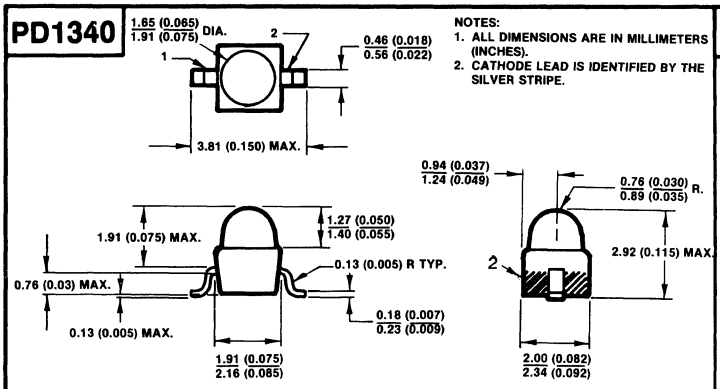

NOTES:
1. ALL DIMENSIONS ARE IN MILLIMETERS (INCHES).
2. CATHODE LEAD IS IDENTIFIED BY THE SILVER STRIPE.

PD1340	As Shown
PD1340a	Individual lamps available in tape and reel packaging. Arrays supplied in shipping tubes.

PD1342

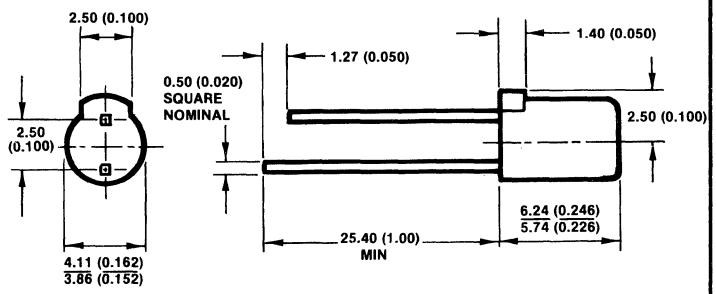

DIMENSIONS IN MILLIMETERS AND (INCHES)

PD1341

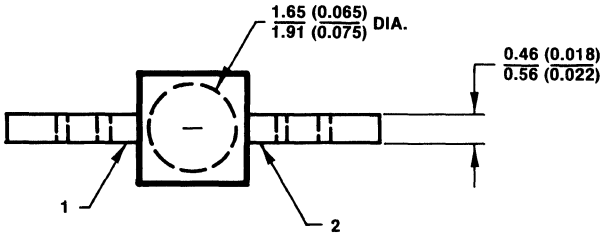

PD1341	As Shown
PD1341a	Tape and reel packaging.

NOTES:
1. ALL DIMENSIONS ARE IN MILLIMETERS (INCHES).
2. CATHODE LEAD IS IDENTIFIED BY THE SILVER STRIPE.

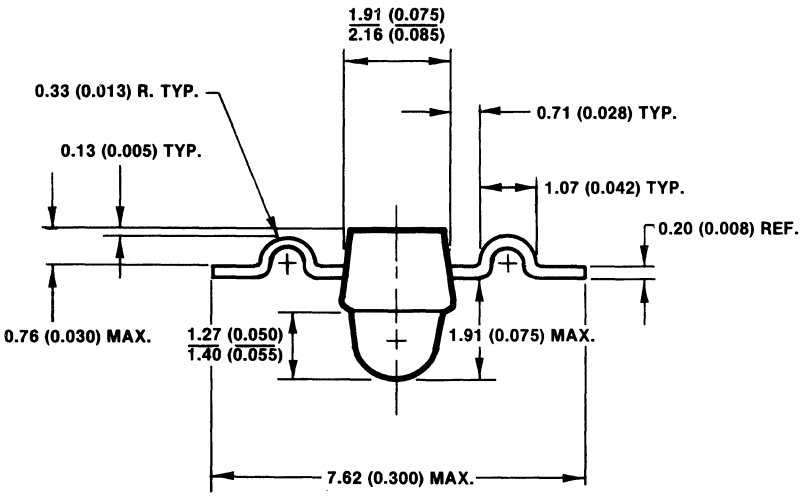

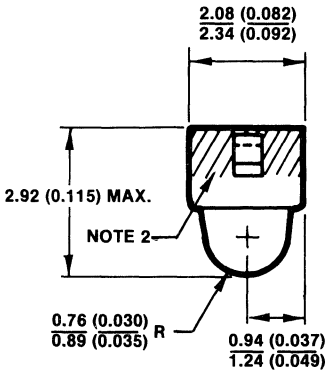

PD1343

DIMENSIONS IN MILLIMETERS AND INCHES.

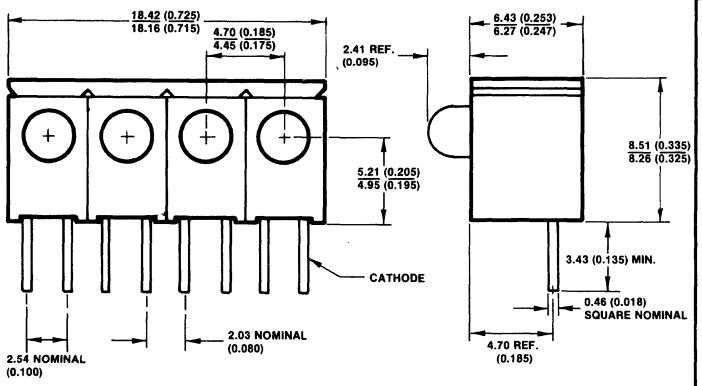

PD1348

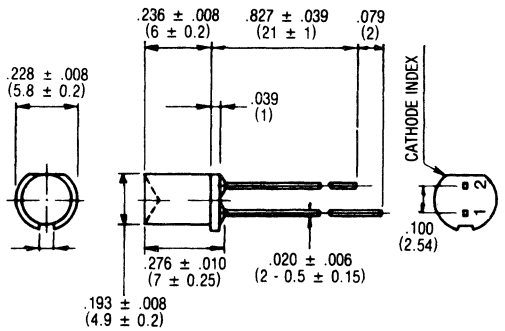

49. OUTLINE DRAWINGS

PD1349

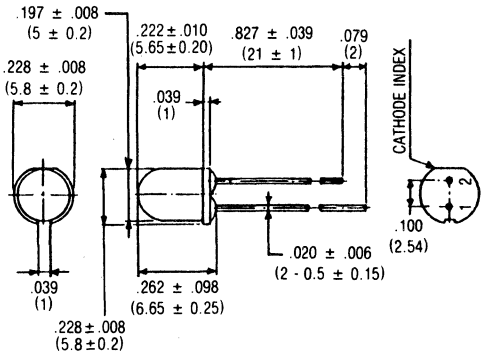

PD1350

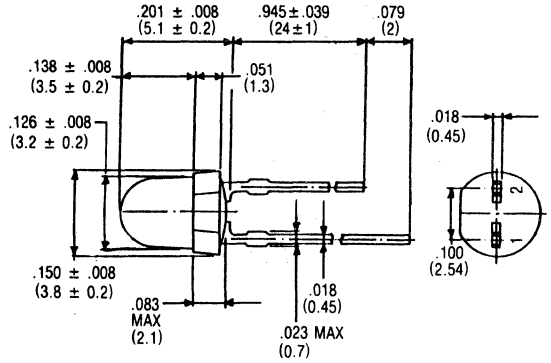

PD1351

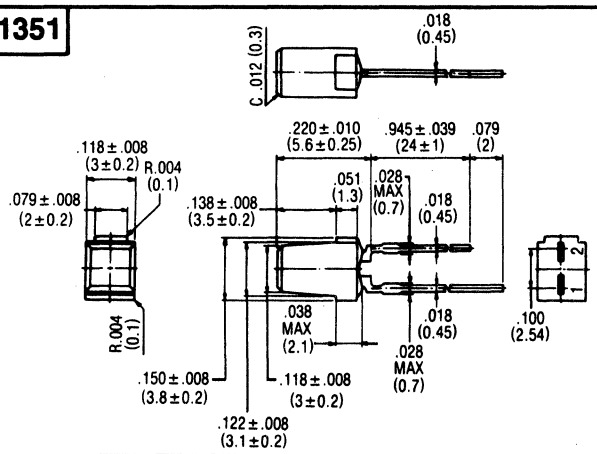

PD1352

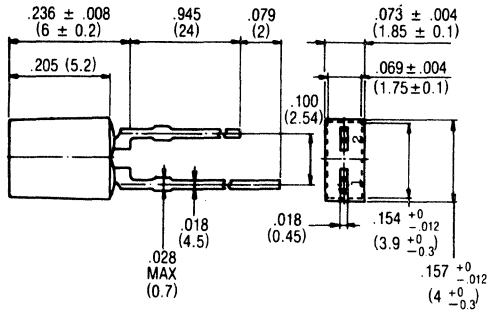

PD1353

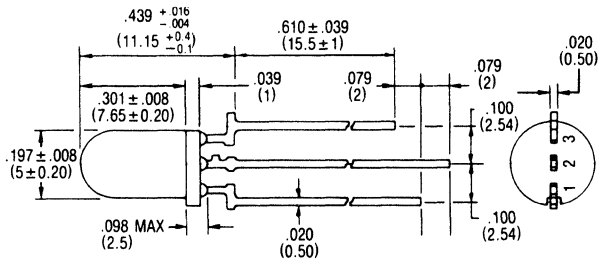

1. ANODE (Orange, Yellow or Red)
2. COMMON CATHODE
3. ANODE (Green)

PD1355

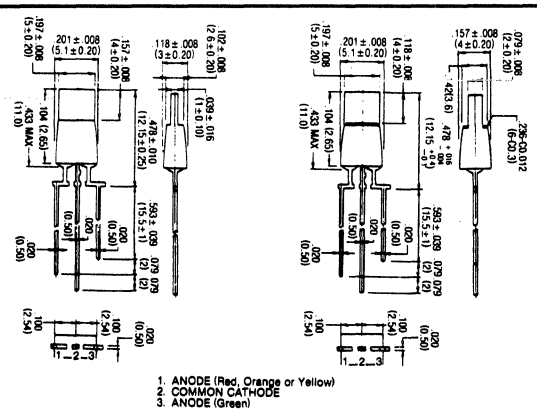

1. ANODE (Red, Orange or Yellow)
2. COMMON CATHODE
3. ANODE (Green)

PD1355 PD1335a

PD1354

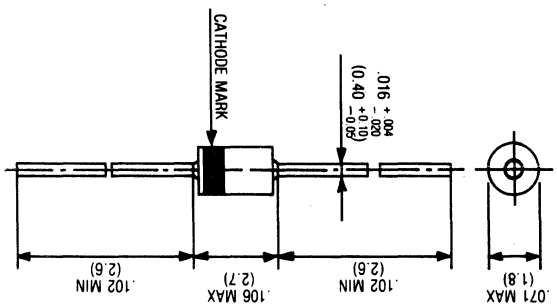

49. OUTLINE DRAWINGS

PD1356

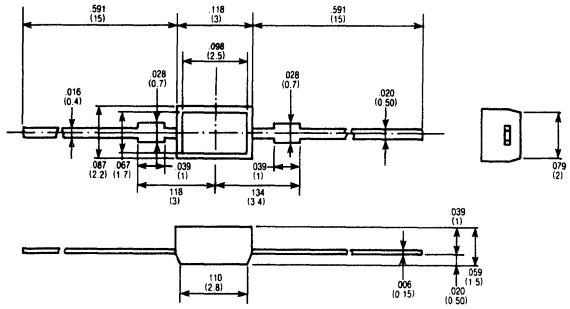

PD1356

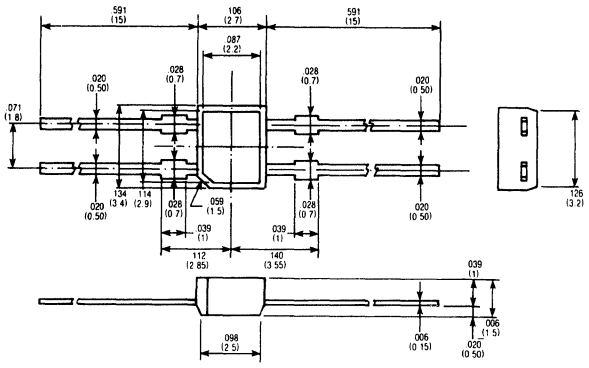

PD1356a

PD1357

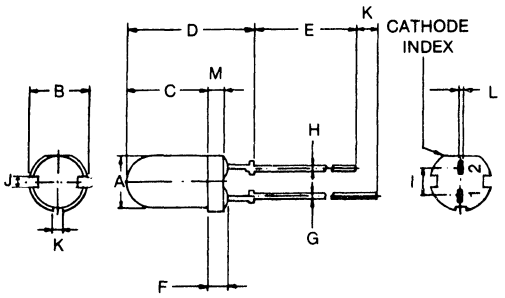

SYMBOL	INCHES	MM
A	0.197 ± 0.008	5 ± 0.2
B	0.228 ± 0.008	5.8 ± 0.2
C	0.315 ± 0.008	8.0 ± 0.2
D	0.453 $^{+0.016}_{-0.004}$	11.5 $^{+0.4}_{-0.1}$
E	0.689 ± 0.039	17.5 ± 1
F	0.098 MAX	2.5 MAX
G	0.020	0.5
H	0.020	0.5
I	0.100	2.54
J	0.028	0.7
K	0.039	1.0
L	0.020	0.5
M	0.039	1.0

PD1360

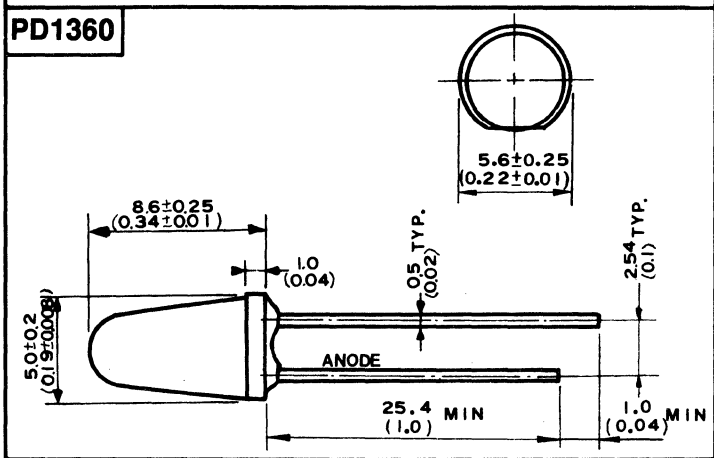

PD1361

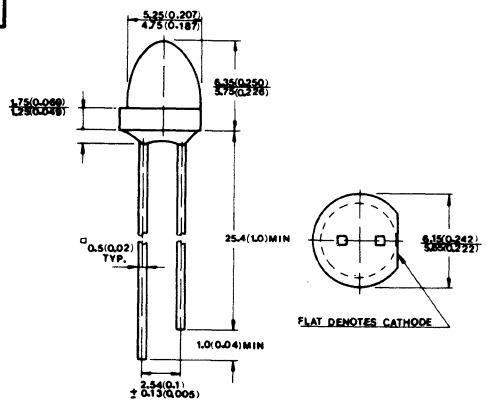

PD1362

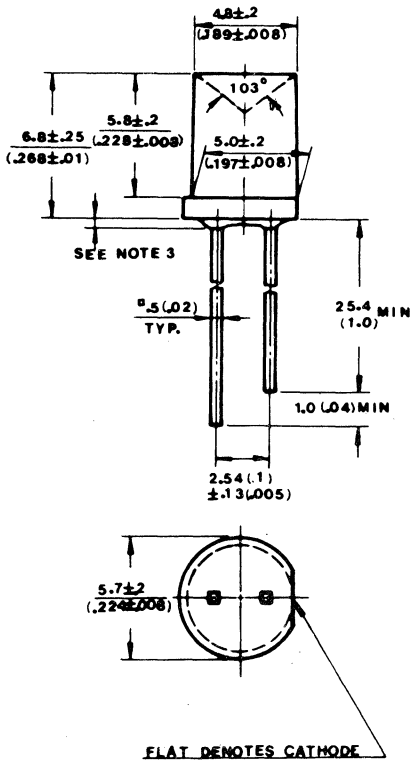

49. OUTLINE DRAWINGS

PD1363

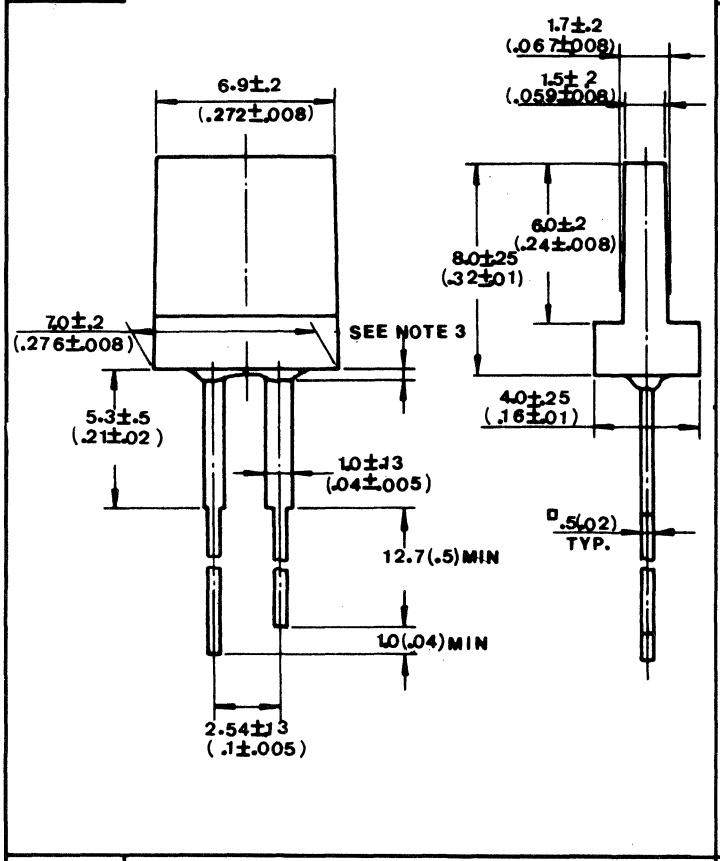

PD1364

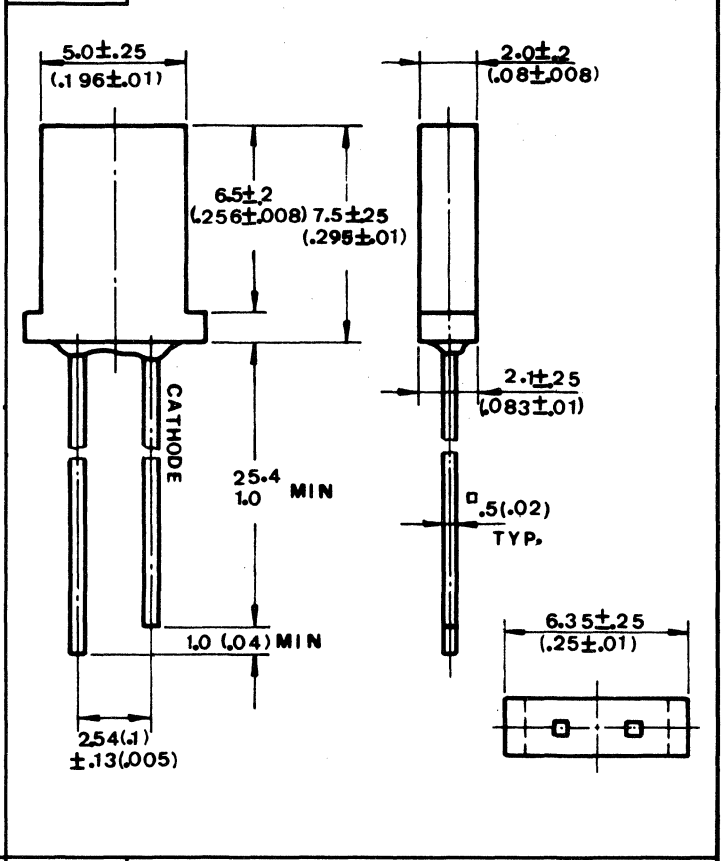

PD1365

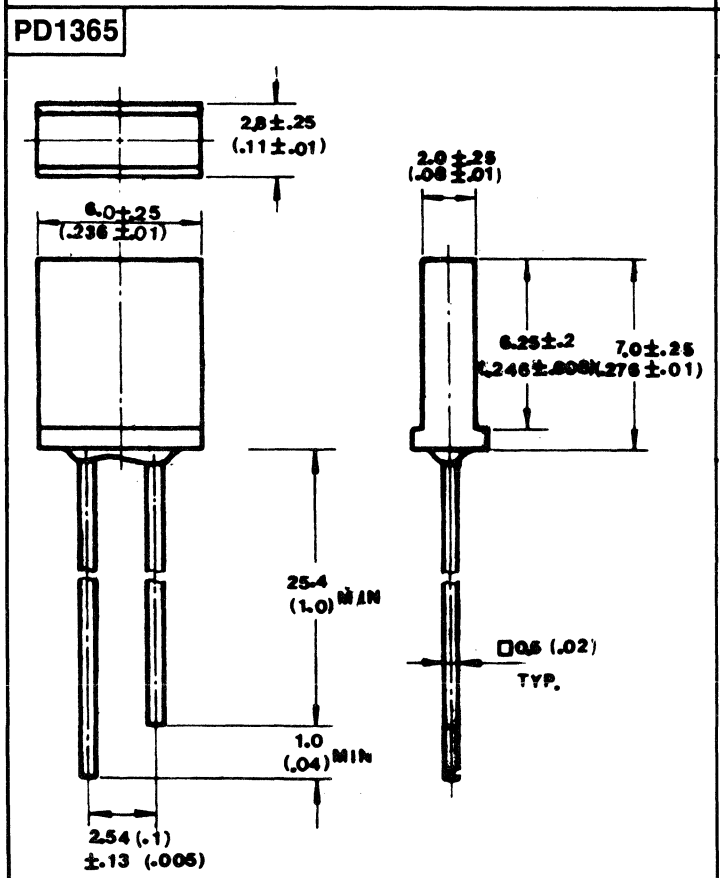

PD1366

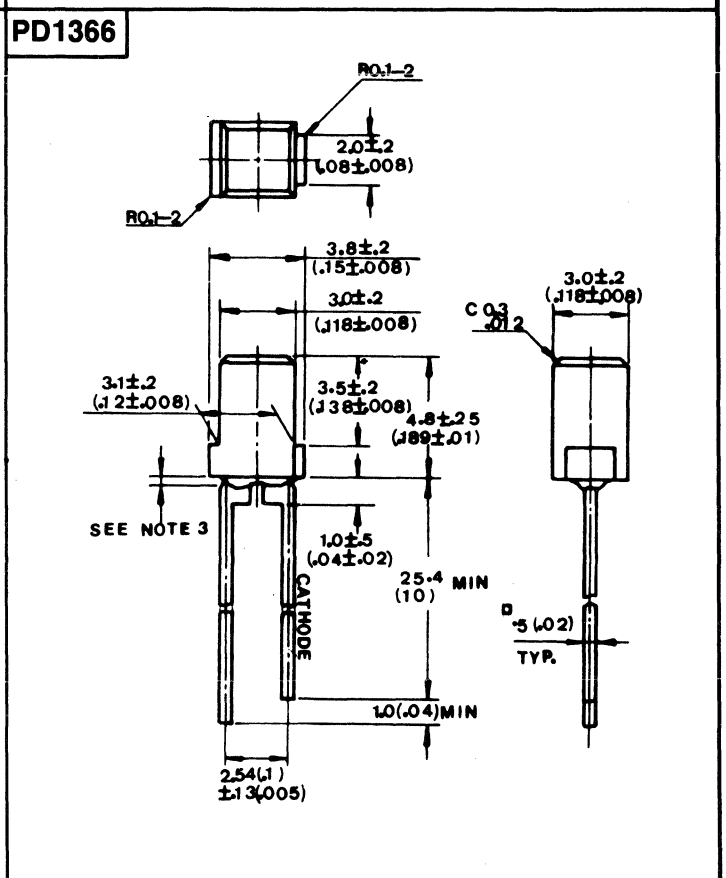

49. OUTLINE DRAWINGS

PD1367

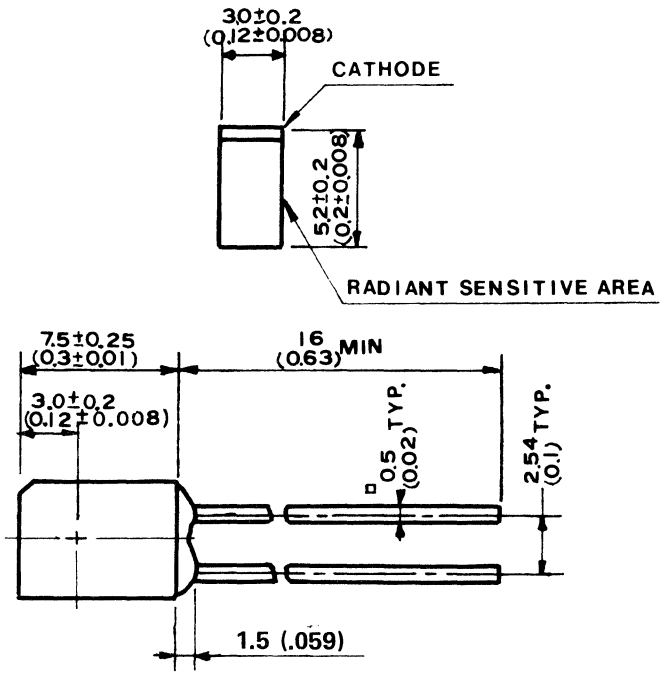

PD1368

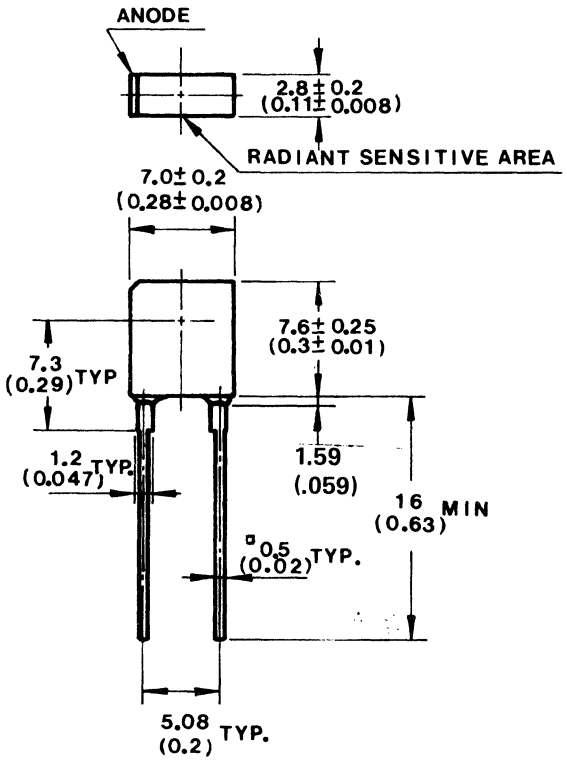

PH123

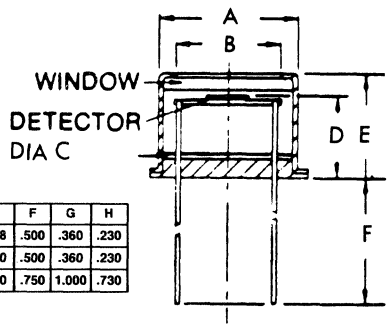

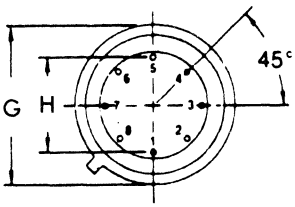

	A	B	C	D	E	F	G	H
PH123	.325	.240		.180	.248	.500	.360	.230
PH123a	.300	.245	.100	.170	.260	.500	.360	.230
PH123b		.695	.444	.210	.270	.750	1.000	.730

PD1423

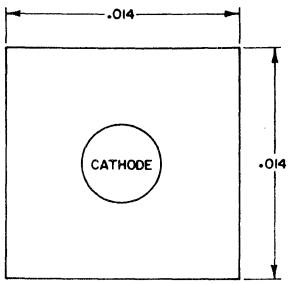

PD1424

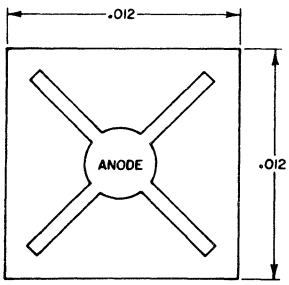

49. OUTLINE DRAWINGS

PD1371

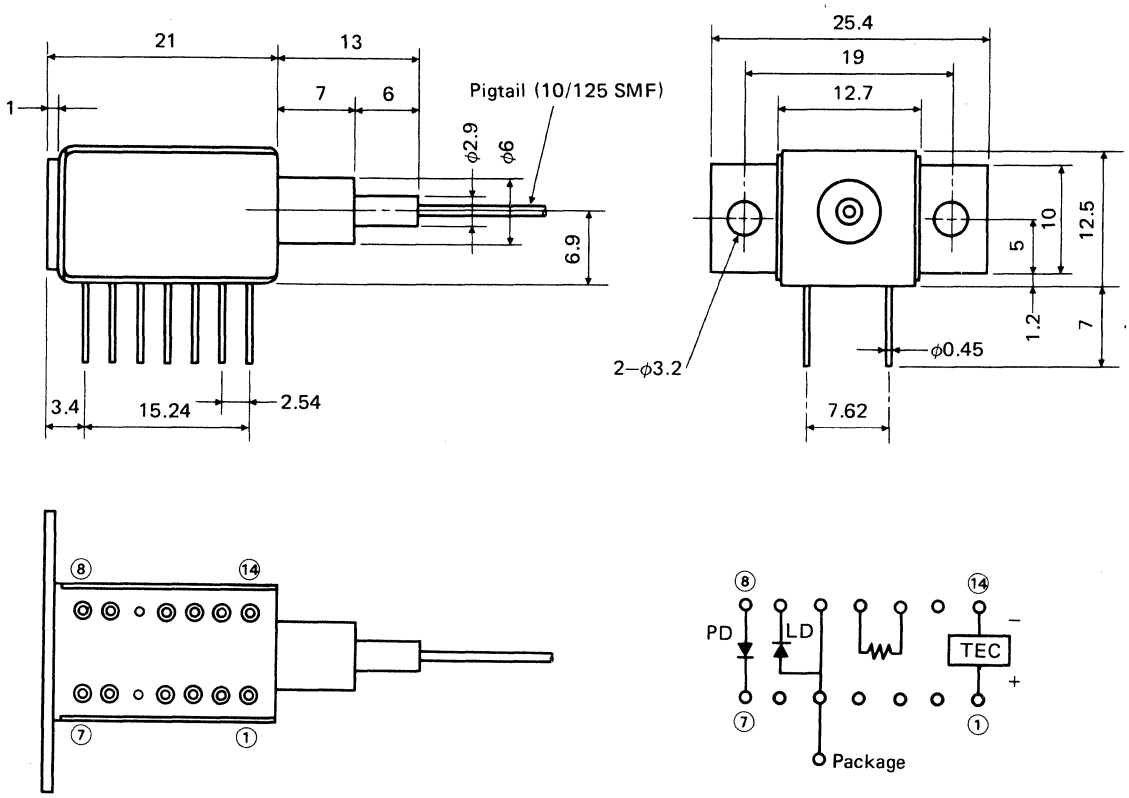

① TE Cooler (+; for cooling)
② NC
③ NC
④ NC
⑤ Package Ground, LD Anode (+)
⑥ NC
⑦ PD Cathode (+)
⑧ PD Anode (-)
⑨ LD Cathode (-)
⑩ Package Ground
⑪ Thermistor
⑫ Thermistor
⑬ NC
⑭ TE Cooler (-; for cooling)

PD1383

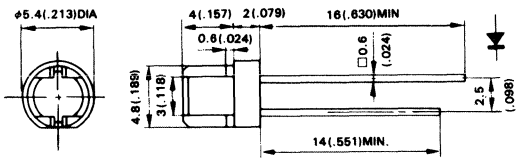

PD1384

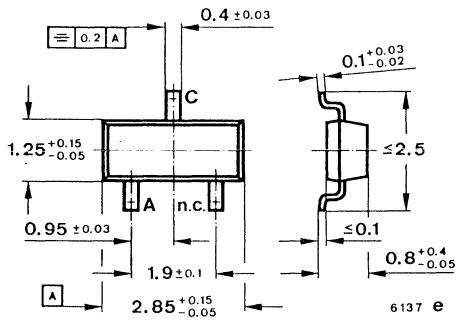

49. OUTLINE DRAWINGS

PD1373a | PD1373b

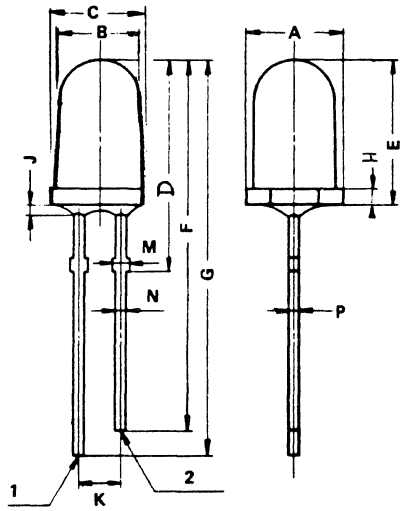

Unit :mm

Suffix	A	B	C	D	E	F	G	H	J	K	M	N	P
PD1373a	4.0	2.8 / 3.2	3.0 / 3.4	10.2 / 10.6	4.3 / 4.7	32.7	34.7	1.3	0.8 MAX	2.54	0.6	0.5	0.5
PD1373b	3.5	2.5 / 2.9	2.8 / 3.2	10.6 / 11.2	5.0 / 5.4	32.9	34.9	0.5		2.54	0.6	0.5	0.5

PD1374

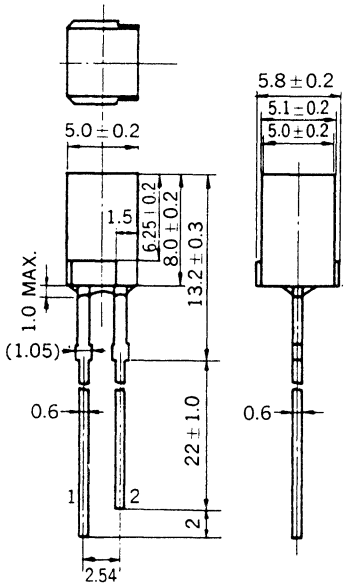

PD1375

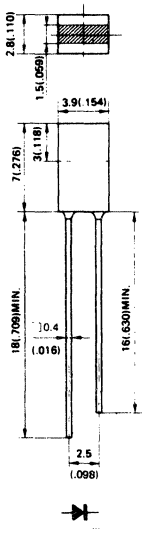

PD1376

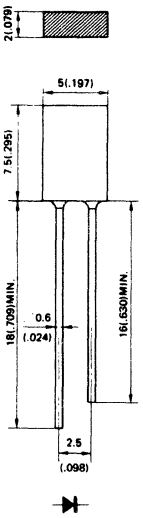

PD1377

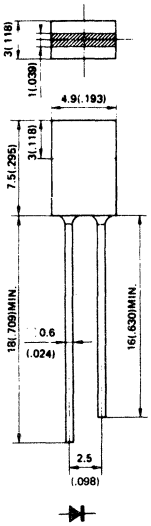

49. OUTLINE DRAWINGS

PD1378

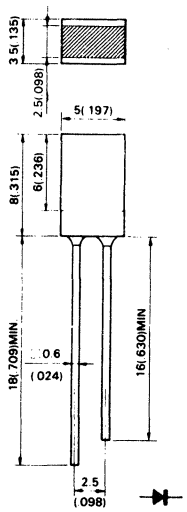

PD1379

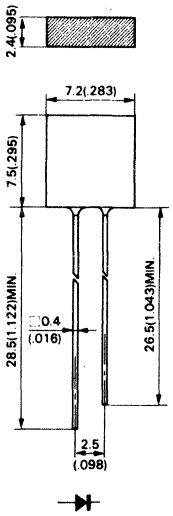

PD1380

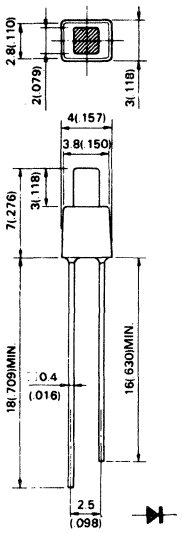

PD1381

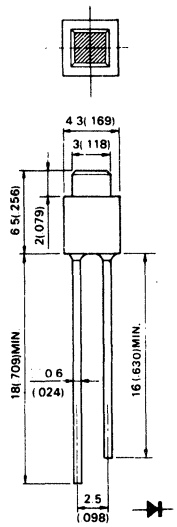

PD1382

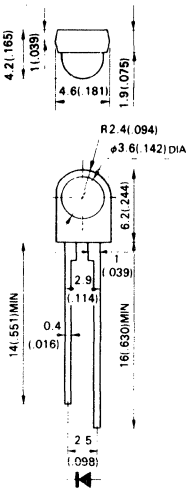

PD1400

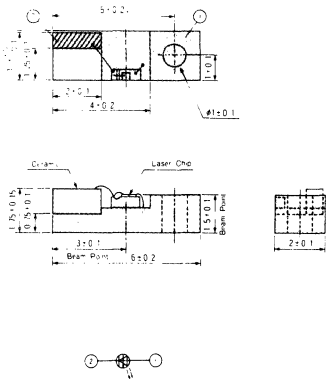

PD1401

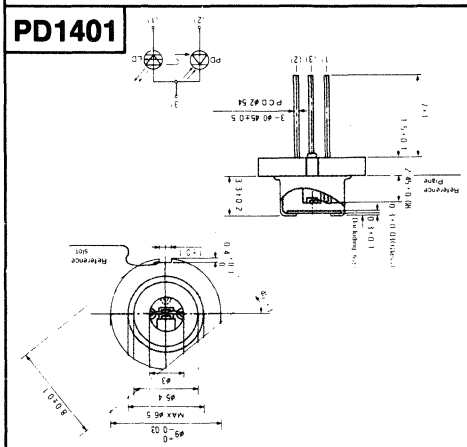

49. OUTLINE DRAWINGS

PD1385

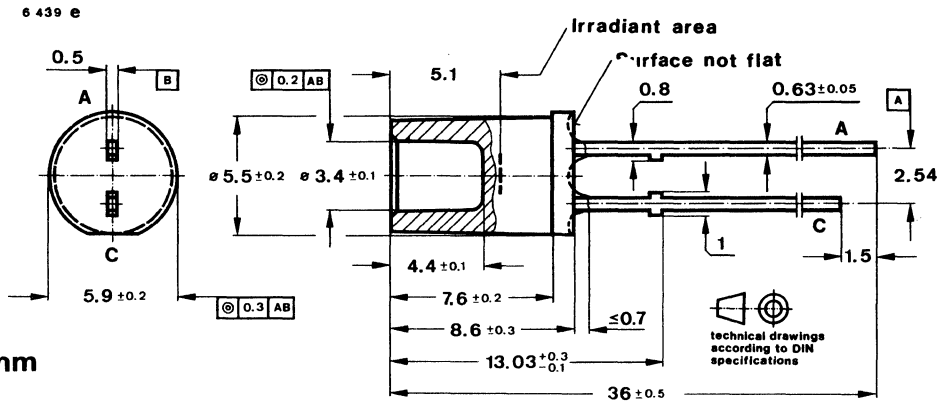

Dimensions in mm

PD1386

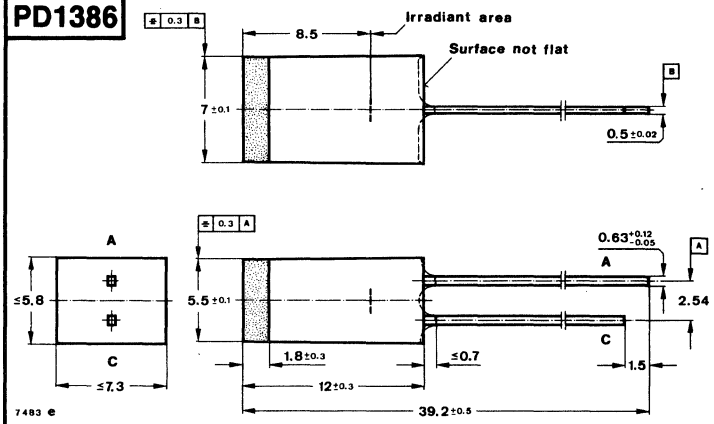

PD1388

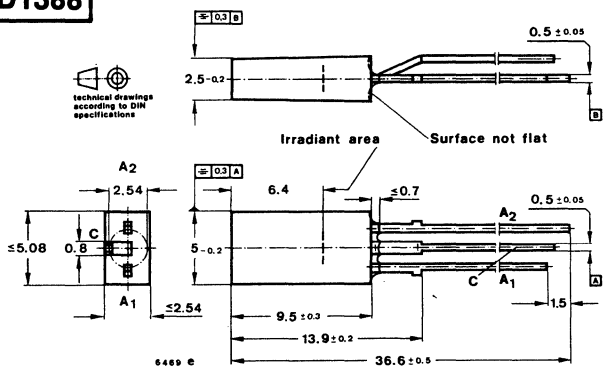

PD1387

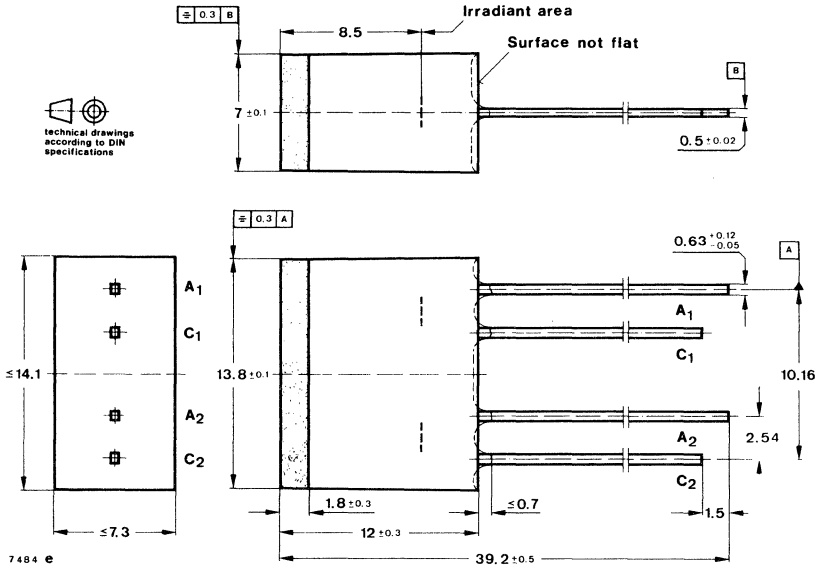

49. OUTLINE DRAWINGS

PD1392

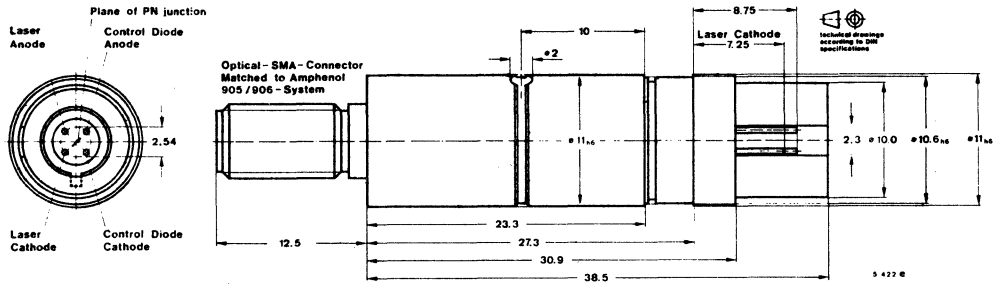

PD1389

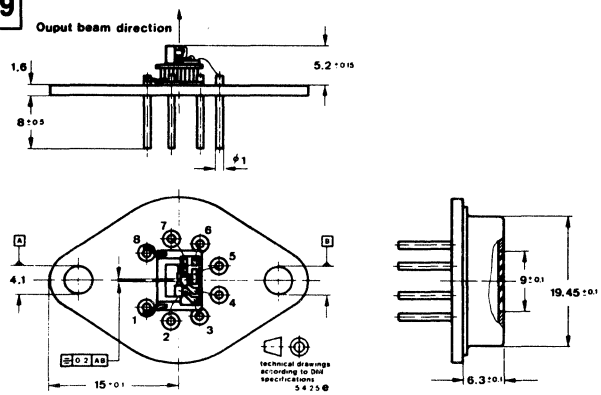

Pin connections

1 TE-cooler +
2 Laser anode
3 Laser cathode
4 Control diode cathode
5 Control diode anode
6 Thermistor (NTC)
7 Thermistor
8 TE-cooler –

Case
3B8DIN41872
JEDEC TO 3
Weight max. 20 g

PD1393

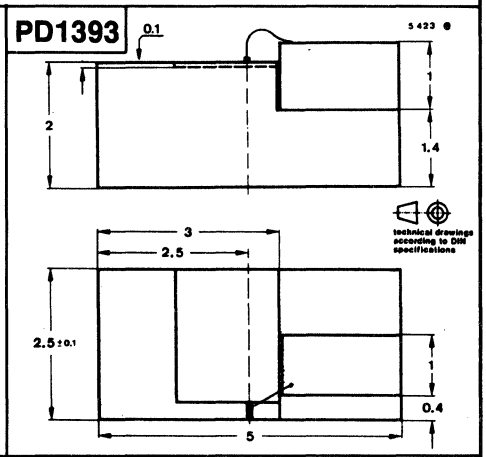

PD1390

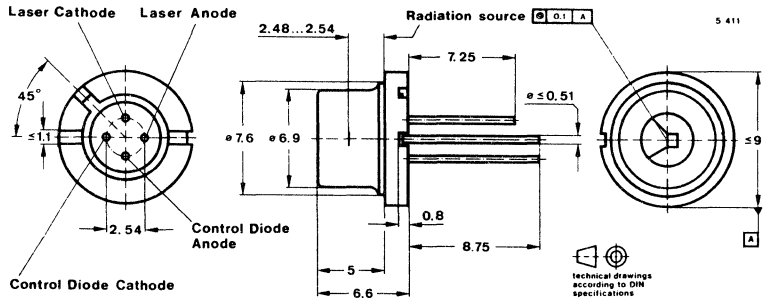

PD1394

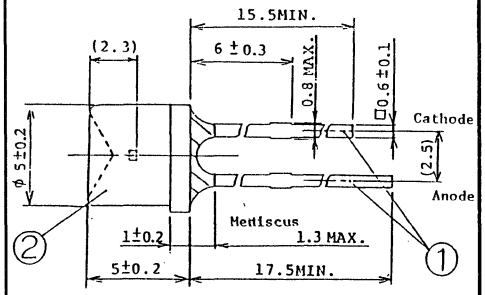

PD1391

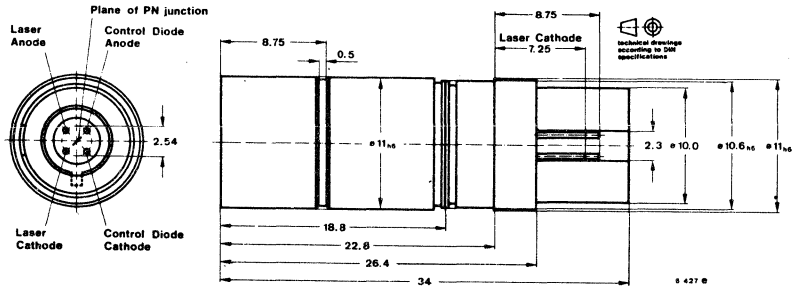

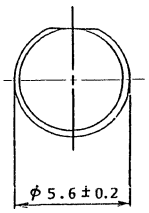

49. OUTLINE DRAWINGS

PD1395

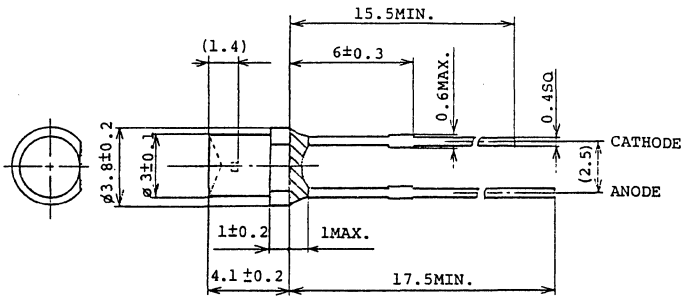

PD1396

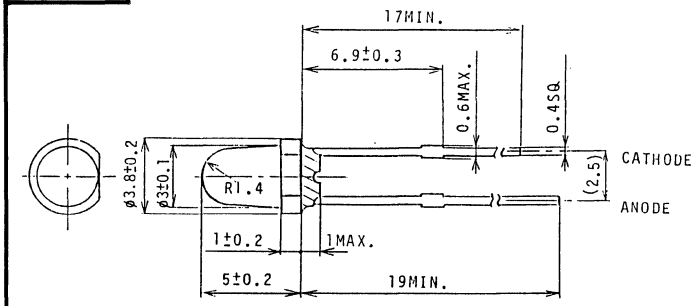

PD1397

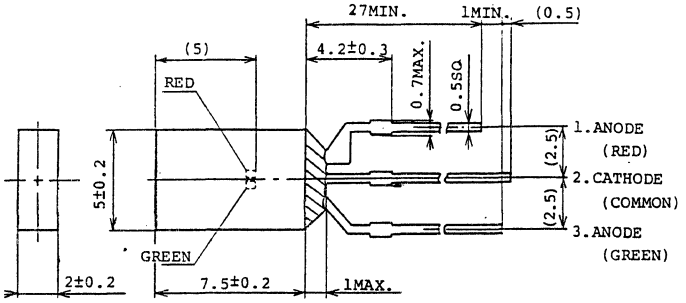

PD1398

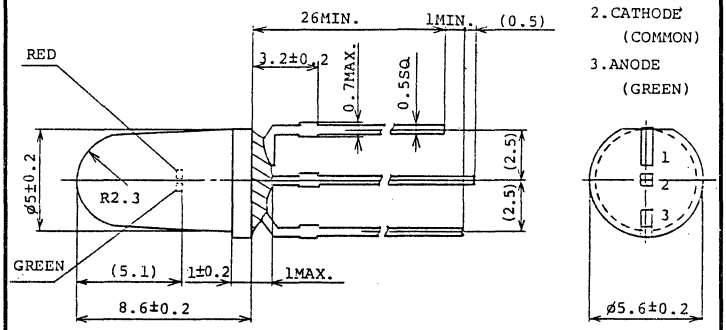

PD1399 Package Dimensions in Inches (mm)

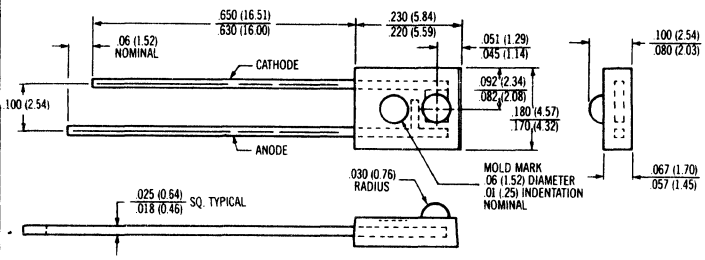

PD1402

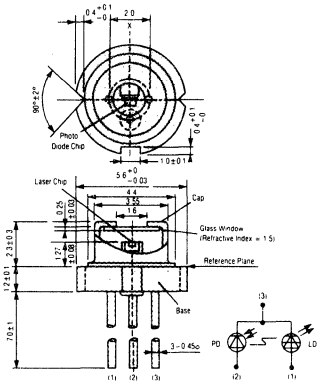

PD1403

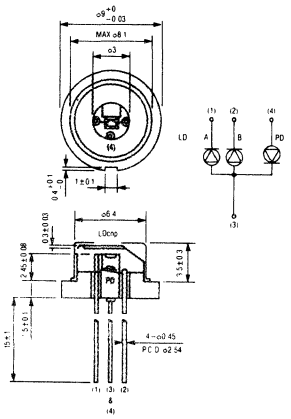

PD1404

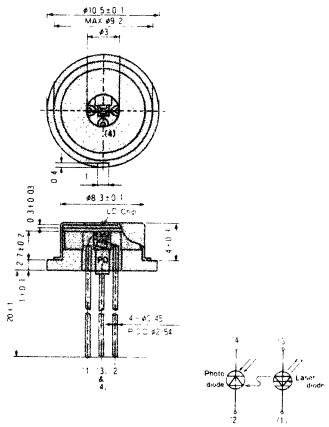

49. OUTLINE DRAWINGS

PD1405

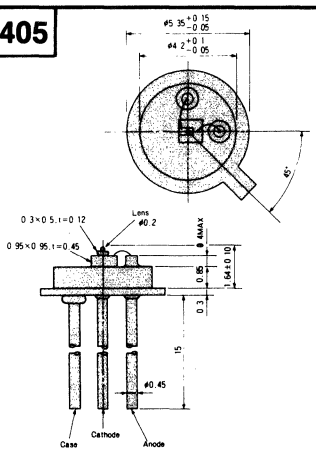

PD1406

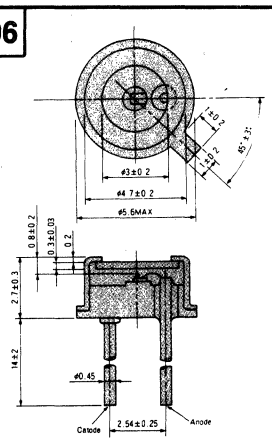

PD1407

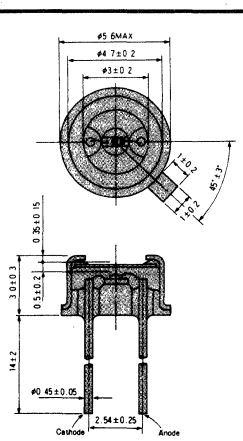

PD1408

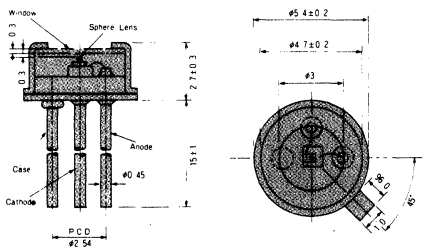

PD1409

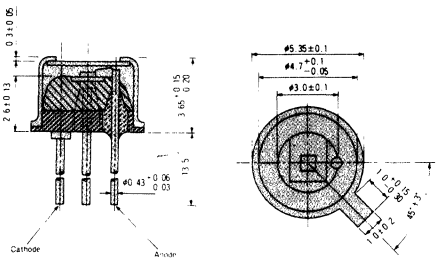

PD1410

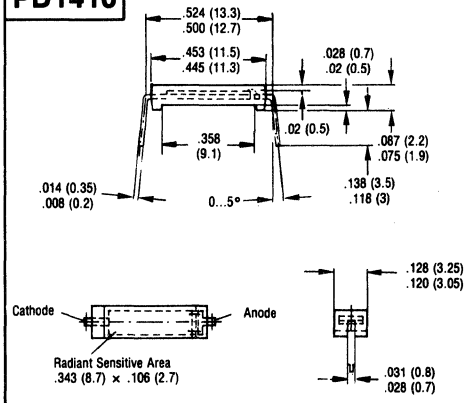

PD1411

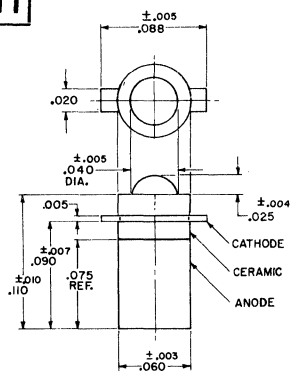

PD1415

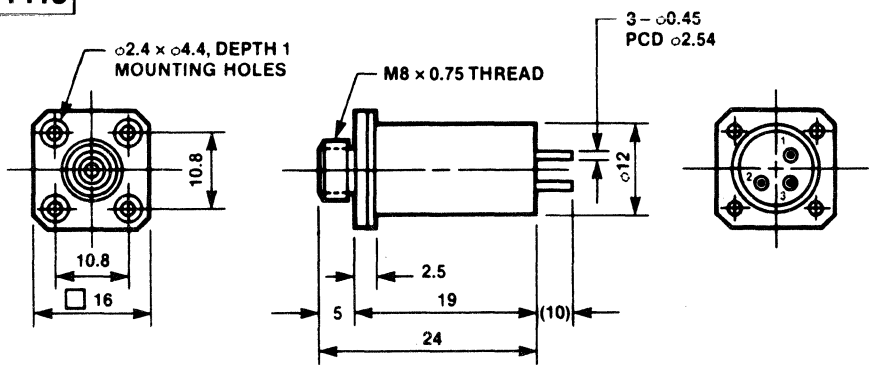

PD1412

Package Dimensions in Inches (mm)

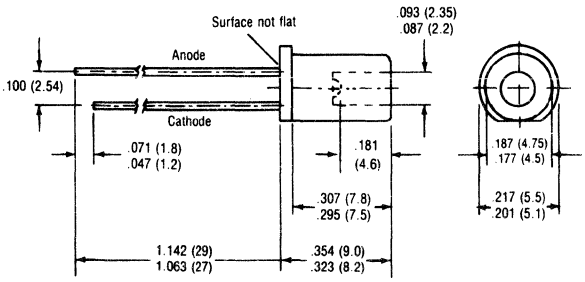

PD1414

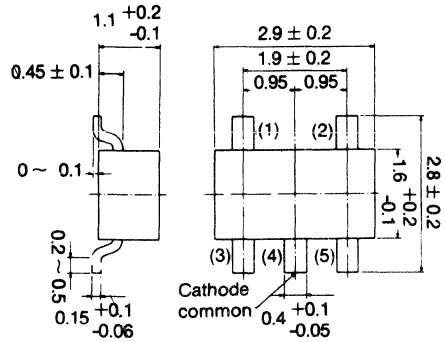

49. OUTLINE DRAWINGS

PD1413

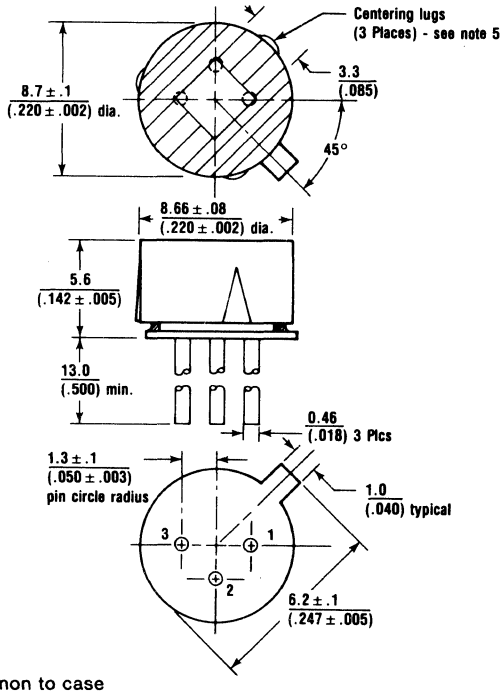

Notes:

1. Catode common to case
2. Pin 1-Anode (P-type)
   Pin 2-Cathode (N-type)
   Pin 3-not connected
3. Detector chip active area is 0.076 mm (0.035) diameter
4. Detector chip active area surface is located 0.89 mm (0.35 in.) below package front surface.
5. Centering lugs designed for press fit into 0.228 inch diameter hole.
6. Dimensions in millimeters (inches)

PD1417

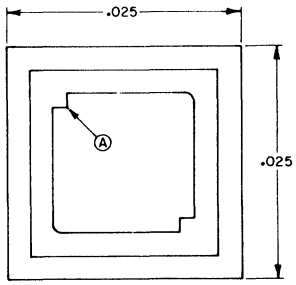

CLCD765

PD1418

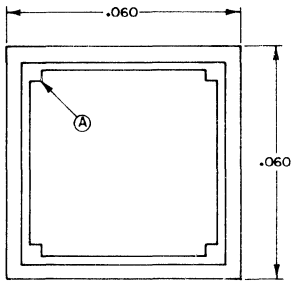

CLCD637

PD1416

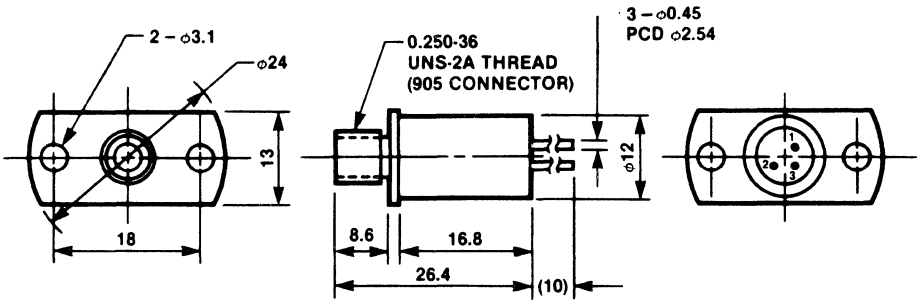

PD1419

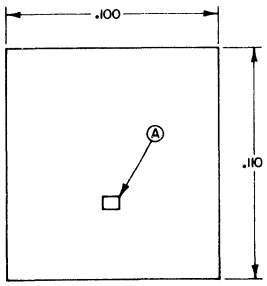

CLCD 798

PD1421

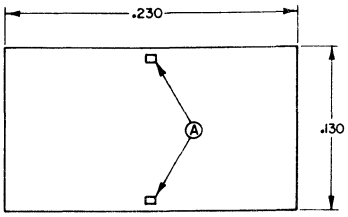

CLCD641

PD1422

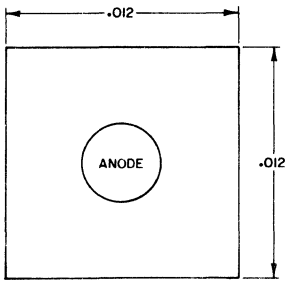

CLCLL 2041

PD1420

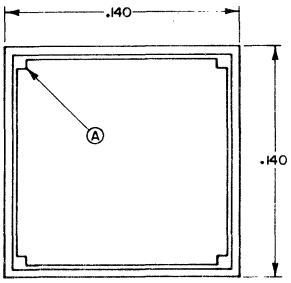

CLCD 621

49. OUTLINE DRAWINGS

PH1

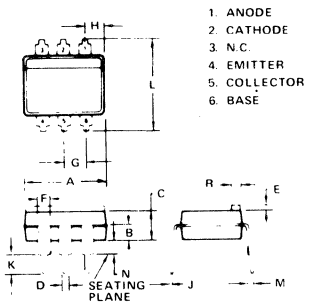

DIM	MILLIMETERS MIN	MAX		INCHES MIN	MAX
A	8.38	8.89		0.330	0.350
B	1.40	1.65		0.055	0.065
C	2.92	3.18		0.115	0.125
D	0.38	0.53		0.015	0.021
E	–	1.02		–	0.040
F	1.02	1.27		0.040	0.050
G	2.54	BSC		0.100	BSC
H	1.57	1.83		0.062	0.072
J	0.23	0.28		0.009	0.011
K	2.92	3.30		0.115	0.130
L	7.37	7.87		0.290	0.310
M	–	10°		–	10°
N	0.51	1.27		0.020	0.050
R	–	1.90		–	0.075

PH3

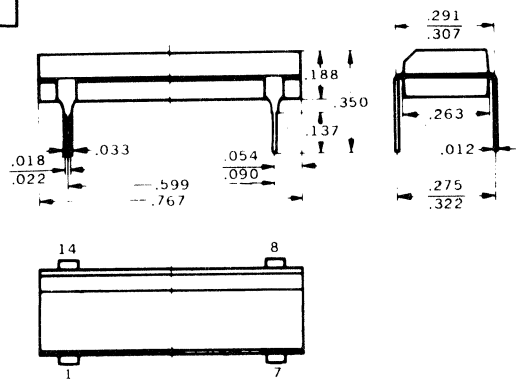

PH6

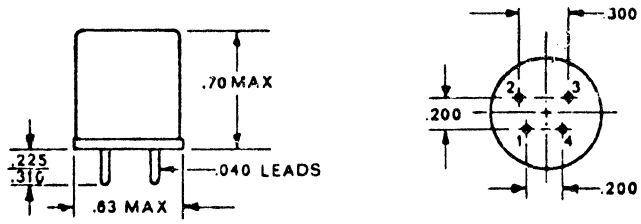

PH8

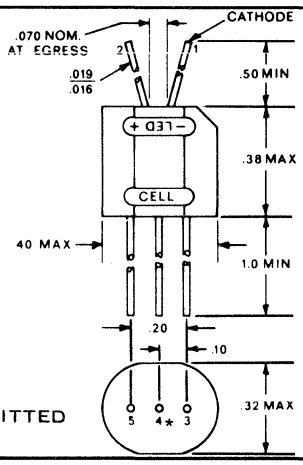

*–LEAD OMITTED

PH9

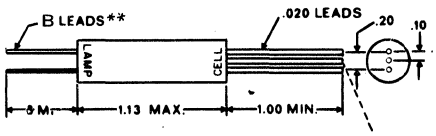

	A	B	REMARKS
PH9	.380 MIN	.010	5 Leads
PH9a	.750 MIN	.015	5 Leads
PH9b	.380 MIN	.010	6 Leads
PH9c	.750 MIN	.015	6 Leads

LEAD FOR PH9b and c ONLY.

PH12

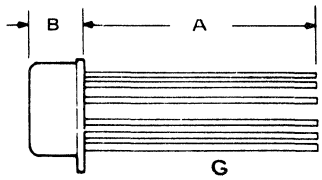

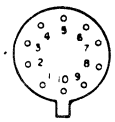

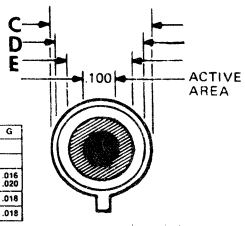

	A	B	C	D	E	F	G
PH12	1.498	.240	.362	.330	.240	.100	
PH12a	.787	.244	.362	.330	.240	.100	
PH12b	.500 MIN	.240 .259	.334 .370	.289 .334	.240		.016 .020
PH12c		.255	.360	.330	.240	.039	.018
PH12d		.255	.360	.330	.240	.099	.018

PH13

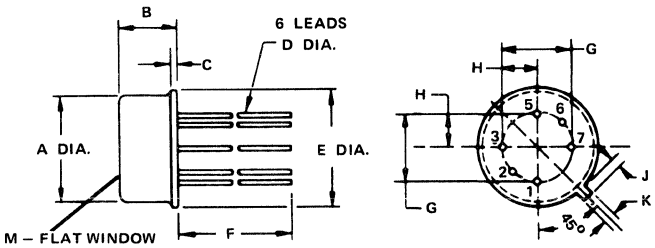

	A	B	C	D	E	F	G	H	J	K	M
PH13	.305 .335	.155 .185	.040 MAX	.016 .019	.335 .370	.500 MIN	.200	.100	.029 .045	.028 .034	
PH13a		.191		.019	.210	.500 MIN	.100		.040		.125 MIN
PH13b	.334 MAX	.259 MAX		.020	.370 MAX	.492 MIN	.200	.100	.039	.034	
PH13c	.335 MAX	.437 MAX		.017	.370 MAX	1.50 MIN	.200		.031	.031	
PH13d	.695	.190		.018	1.00	.750			.031	.031	

49. OUTLINE DRAWINGS

PH14

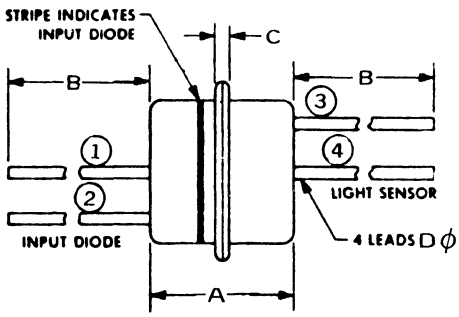

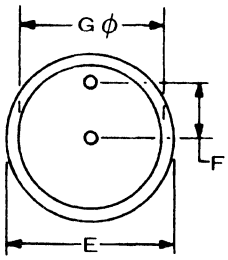

END VIEW TYPICAL OF BOTH ENDS

	A	B	C	D	E	F	G	REMARKS	LEAD CODE 1	2	3	4
PH14	.194 / .206	1.00 MIN	.013 / .015	.016 / .019	.187 / .220	.045 / .055	.161 / .171		A	K	E	C
PH14a	.212	.433 MIN	.015	.017	.228	.049	.194	No Stripe	K	A	C	E

PH33

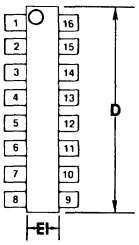

	A	A1	B	B1	C	D	E1	e1	EA	L	S	a°
PH33	.180	.035	.016	.040	.010 TYP	.765 TYP	.280 MAX	.100 TYP		.100 / .140	.032 TYP	0° / 8°
PH33a	.130 / .150	.020 / .030	.016 / .020	.048 / .062	.008 / .012	.380 / .400	.240 / 2.60	.090 / .110	.300 TYP	.140 MAX	.040 / .050	0° / 15°
PH33b	3.5					19.8	6.5	2.54	7.6	3.3		

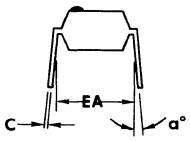

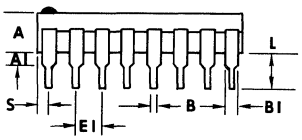

PH17

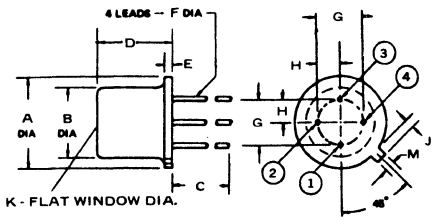

	A	B	C	D	E	F	G	H	J	K	M
PH17	.209 / .230	.178 / .195	.500 MIN	.170 / .210	.030 MAX	.016 / .019	.100	.050	.028 / .048		.036 / .046
PH17a	.210		.500 MIN	.191		.019 MAX	.100			.125	
PH17b	.209	.189	.500	.191		.019 MAX				.136	
PH17c	.210	.189	.500	.191		.019 MAX	.100			.154	
PH17d	.209 / .230	.178 / .195	.500 MIN	.170 / .210		.016 / .019	.100		.028 / .048		.036 / .046
PH17e	.228 MAX	.189 MAX	.500 MIN	.216 MAX		.019 MAX	.100		.046 MAX		.045 MAX
PH17f	.335 / .370	.305 / .335	.500 MIN	.240 / .259		.016 / .020	.200 PCD		.029 / .044	.240	.027 / .033
PH17g	.370 MAX	.335 MAX	1.50 MIN	.260 MAX		.017	.190 / .210		.031		.031
PH17h	.370 MAX	.370 MAX	1.50 MIN	.650 MAX		.017	.200		.031		.031
PH17j	.334 / .370	.314 / .324	.500 MIN	.240 / .259		.016 / .018	.189 / .209		.029 / .044	.232	.027 / .035
PH17k	.360	.325	1.00 MIN	.640		.017	.200		.040		.032
PH17m	.360	.325	1.00 MIN	.265		.016 / .019	.200		.040		.032
PH17n	.210 / .216	.185 MAX	.492 / .570	.192 / .204		.017	.088 / .111				
PH17p	.212	.185	.500 TYP	.120	.010	.017	.100		.035	.125	.040
PH17Q	.335 MAX		.500 MIN	.260 MAX			.200		.039 MAX		.034 MAX
PH17r	.355 / .385	.320 / .330	1.50 / 1.53	.270 / .290	.030 / .050	.015 / .019	.212	.106	.035 / .045		.025 / .035

PH18

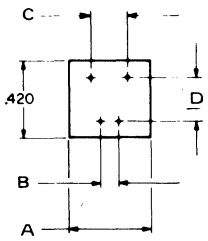

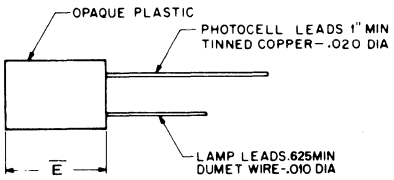

	A	B	C	D	E
PH18	.445	.100	.200	.240	.620
PH18a	.354	.019	.314	.196	.551

PH19

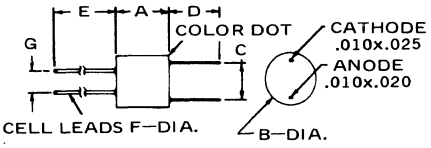

	A	B	C	D	E	F	G
PH19	.215 / .260	.250	.130	.220 MIN	1.00 MIN	.016 / .020	.100
PH19a	.750	.500 REF	.300 REF	1.00 NOM	.650 NOM	.010 REF	.150
PH19b	.265 / .450	.265 / .310	.130	1.00	.475	.020	.150

PH20

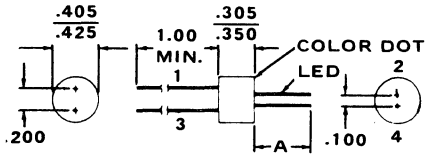

	A	1	2	3	4
PH20	.500 MIN	.017Ø / .021	.017Ø / .021	.017Ø / .021	.017Ø / .021
PH20a	.250 MIN	.020Ø	.010 x.025	.020Ø	.010 x.025

49. OUTLINE DRAWINGS

PH21

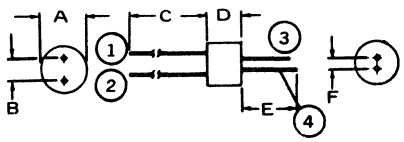

ALL LEADS ROUND

	A	B	C	D	E	F	LEADS
PH21	.405 / .425	.200	1.000 MIN	.305 / .350	.500 MIN	.100	.017 / .021
PH21a	.310	.100	.500 MIN	.510 MAX	.500 MIN	.100	
PH21b	.310	.100	.500 MIN	.215 / .245	.500 MIN	.100	.016 / .020
PH21c	.540 / .560	.295	1.0 MIN	.340 / .380	.500 MIN	.100	.017 / .021

PH22

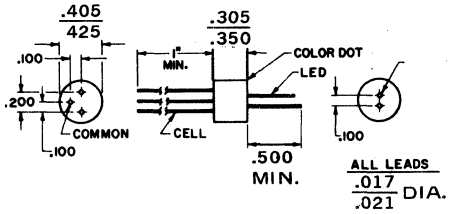

PH23

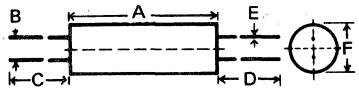

	A	B	C	D	E	F
PH23	1.095 / 1.155	.190 / .210	.970 / 1.030	.970 / 1.030	.019 REF	.405 / .425
PH23a	.375	.100 TYP	1.500 MIN	1.500 MIN	.016 / .019	.330
PH23b	4.120	.100 TYP	1.500 MIN	1.500 MIN	.016 / .019	.435
PH23c	.650 / .850		1.300 MIN	1.300 MIN	.009 / .011	.125 / .129
PH23d	.618 / .632	.182 / .192	.750 NOM	1.50 NOM	.019	.316 / .323
PH23e	.265 TYP	.150 TYP	1.00 TYP	.220 MIN	.010x .020	.235 / .280
PH23f	.511	.118				.275

PH24

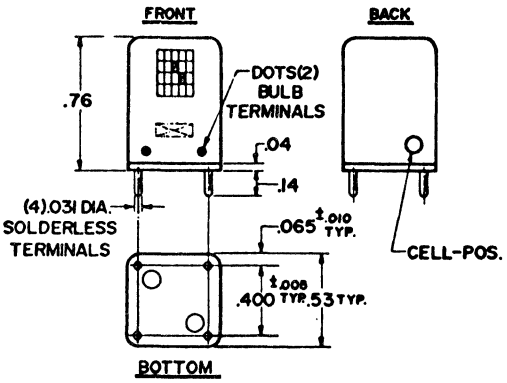

PH25

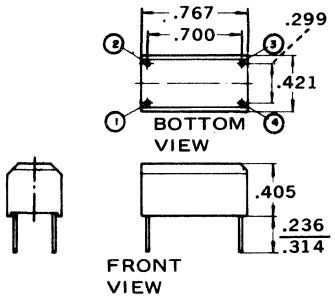

PH27

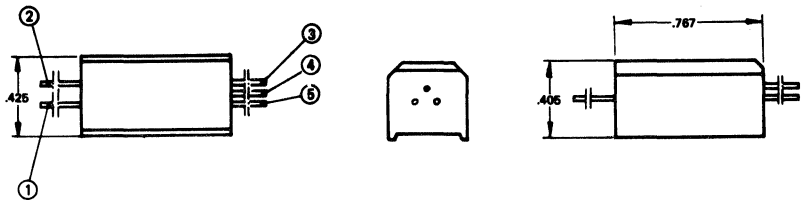

PH30

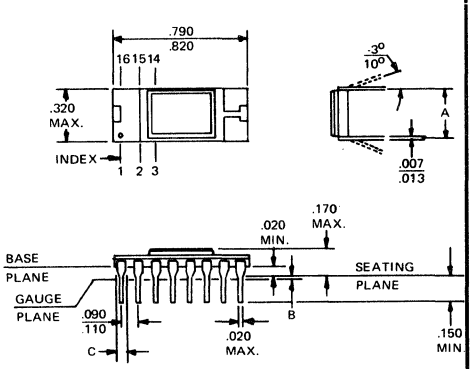

	A	B	C
PH30	.290 / .310		
PH30a	.277 / .303	.000 / .030	.055 MAX

PH31

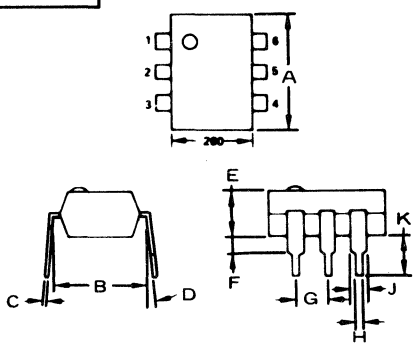

	A	B	C	D	E	F	G	H	J	K
PH31	.355 / .375	.300	.008 / .012	5°	.135 / .180	.010 / .030	.100	.013 / .019	.035 / .045	.110 / .130
PH31a	.318 / .334	.291 / .307			.137 MAX	.009 MIN	.100	.009 / .017		.070 MIN
PH31b	.347	.291 / .331	.014	0°	.209 MAX	.020 MAX	.100	.019 / .022	.059	.130
PH31c	.370 MAX	.300 TYP	.012 MAX	90° 105°	.145 MAX	.070 MAX	.100 TYP	.021 MAX	.040 MIN	.220 MAX

49. OUTLINE DRAWINGS

PH11

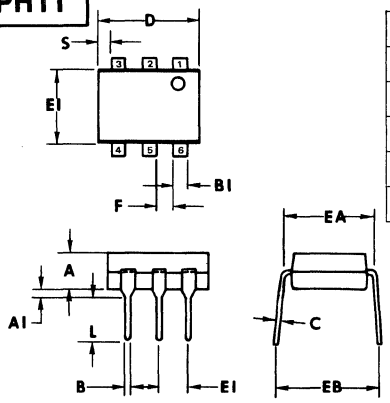

	A	A1	B	B1	C	D	E1	e1	EA	EB	F	L	S
PH11	.110 .130	.022 .042	.016 .020	.050 TYP	.009 .011	.330 .350	.240 .260	.090 .110	.300 TYP	.340 TYP	.050 TYP	.140 .160	.045 MAX
PH11a	.110 .130	.022 .042	.016 .020	.050	.010	.340	.250	.100 TYP	.300	.340	.050	.150 TYP	
PH11b	.130 .150	.020 .030	.016 .020	.048 .052	.008 .012	.340 .360	.240 .260	.100 TYP	.300 TYP			.130 .150	.070 .080
PH11c	.130 .150	.020 .030	.016 .020	.050 TYP	.010 TYP	.350 TYP	.250 TYP	.100	.300			.140 TYP	.070 .080
PH11d	.130 .150	.020 .030	.018 TYP	.048 .052	.008 .012	.340 .360	.240 .260	.100	.300			.130 .150	.070 .080
PH11e	.130 .138	.008 .016	.018 .021		.010 .014	.335 .343	.248 .256	.100 TYP	.300 TYP	.291 .307		.122 .152	

	Pin 1	Pin 2	Pin 3	Pin 4	Pin 5	Pin 6
PH11	An	Ka	NC	E	C	B
PH11a	An	Ka	NC	E	C	NC
PH11b	An/Ka	An/Ka	NC	E	C	B
PH11c	An	Ka	NC	E	C	B
PH11d	An	Ka	NC	Ka(SCR)	An(SCR)	Gate
PH11e	An	Ka	NC	E	C	B

PH37

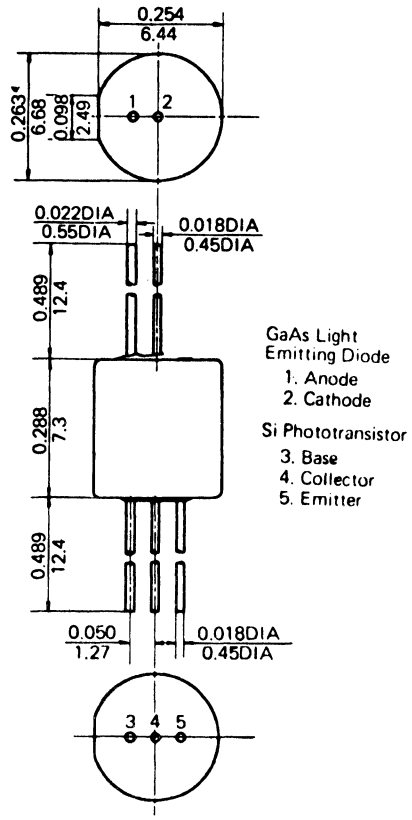

PH38

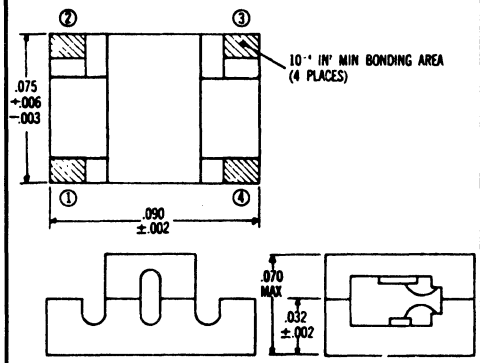

PH39

	COUPLER SERIES	D	H	L*
PH39	MCL	.360		.870
	MCN	.360		1.140
	MCD	.260	.510	
	MTL	.360	.470	
	MTD	.360	.470	
	*AXIAL PACKAGE			

PH47

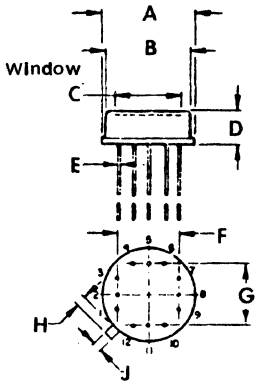

	A	B	C	D	E	F	G	H	J
PH47	.600	.550	.435	.200	.017 .021	.410	.410	.029 .045	.028 .035
PH47a	1.00	.926	.250	.256 .276	.018	.400	.400		

PH48

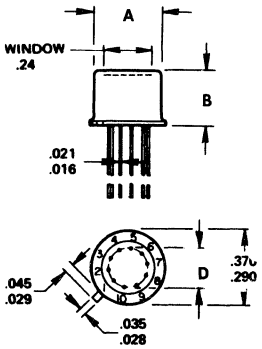

	A	B	C	D
PH48	.240 .335	.200 .260	.290 .370	.190 .210
PH48a	.300 .350		.340 .380	
PH48b	.362	.222 MAX	.365 MAX	.230

PH50

	A	B	C	D	E	F	G	H	J	K	M	N	P	R	S	T
PH50	.330 .385	.260 .280	.325 MAX	.015 .021	.020 MIN	.160 MAX	.100 MIN	.008 .015	.090 .110	.290 .310	.050 .070	.065 .090		0° 15°	45° REF	
PH50a	.330 .385	.260 .280	.350 MAX	.015 .020	.020 MIN	.200 MAX	.120 MIN	.008 .012	.090 .110	.300	.050 .070	.065 .095		0° 15°	45° REF	
PH50b	.330 .350	.225 .280	.340 MAX	.016 .020				.008 .012	.090 .110	.300	.040 .070	.085	.100 MIN			
PH50c	.350			.018				.010		.300	.050			5°		.225
PH50d	.330 .350	.225 .280	.340 MAX	.016 .020	.015 MIN	.200		.008 .012	.090 .110	.300 REF	.040 .070	.085 MAX	.100 MIN	15°		
PH50e	.350 MAX	.260 MAX		.020 MAX				.012 MAX	.100 BSC	.300 BSC	.070 MAX			15°		

49. OUTLINE DRAWINGS

PH51

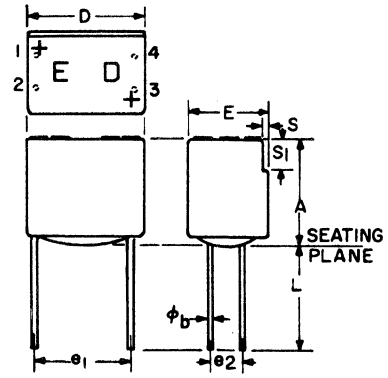

SYMBOL	INCHES MIN.	INCHES MAX.	MILLIMETERS MIN.	MILLIMETERS MAX.	NOTES
A		.350		8.89	
ϕb	.016	.019	.407	.482	1
D		.375		9.52	
e1	.285	.315	7.24	8.00	
e2	.090	.110	2.29	2.79	
E		.250		6.35	
L	.300		7.62		1
S	.010	.020	.26	.50	
S1	.085	.105	2.16	2.66	

NOTES:

1. FOUR LEADS. LEAD DIAMETER CONTROLLED BETWEEN .050" (1.27MM) FROM THE SEATING PLANE AND THE END OF THE LEADS.

PH55

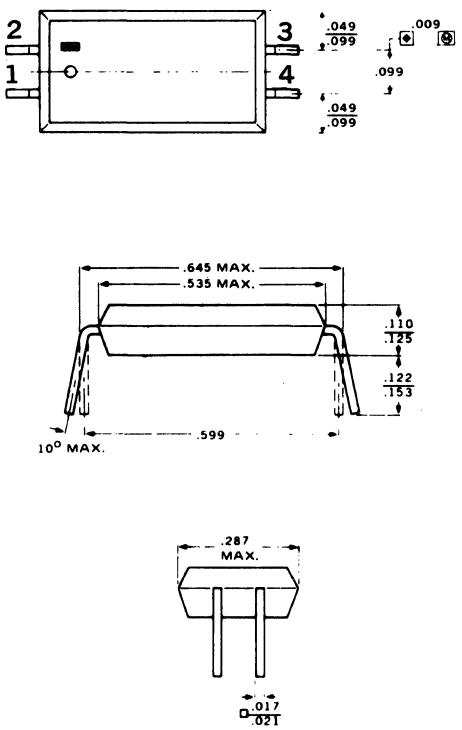

PH54

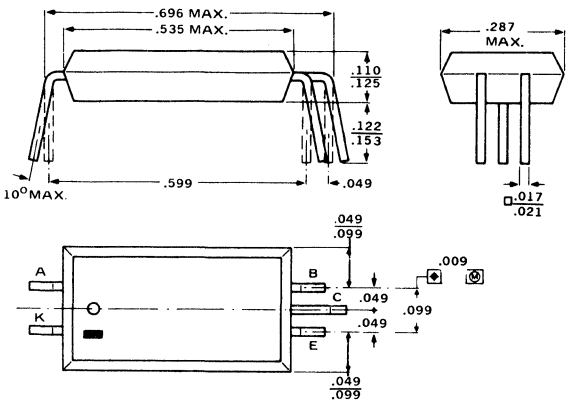

PH56

	A	B	C	D	E	F	G	H	J	K	M
PH56	.366 .405	.232 .271	.015 .039	.118 .157	.118 .157	.017	.041 .053		.099	.280 .319	
PH56b	.380	.240	.031	.143	.106	.019	.047		.100	.300	.009
PH56c	.380	.250	.040	.140	.120	.018 TYP			.100 TYP	.300	
PH56d	.365 .385	.245 .252	.020 .030	.115 .135	.120 .135	.015 .021	.054 .062		.100 TYP	.290 .310	.008 .015
PH56e	.370 .390	.240 .260	.020 MIN	.165 MAX	.115 MIN	.025 MAX	.063 MAX		.090 .110	.290 .310	.007 .013
PH56f	.355 .375	.240 .260	.015 .035	.140 .160	.130 .170	.015	.040		.100 TYP	.300	.010
PH56g	.368 .392	.232 .272	.020 MIN	.197 MAX	.100 MIN	0.4 0.6	.041 .053		.090 .109	.288 .312	.007 .013
PH56h	.341	.251	.031	.187 MAX	.110	.020			.100	.300	.010
PH56i	.380 .400	.240 .260	.20 .30	.130 .150	.130 .150	.016 .020	.048 .052		.100 TYP	.300 TYP	.008 .012

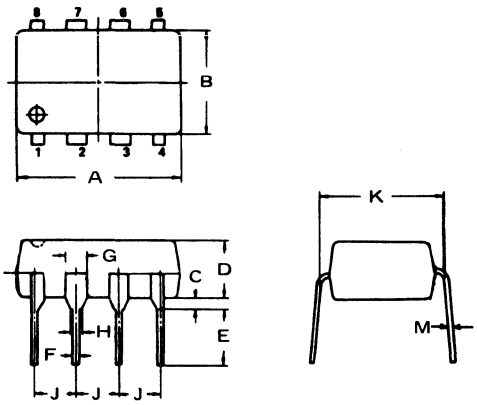

PH287

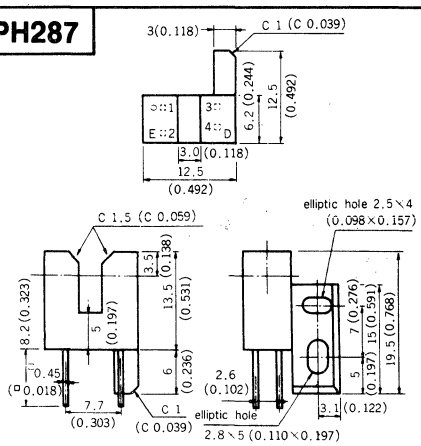

PH58

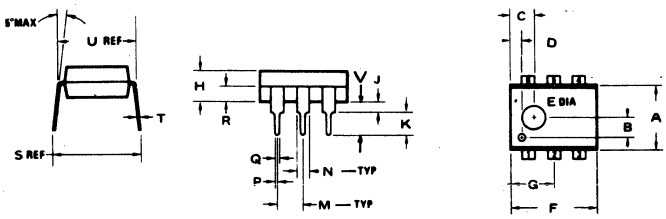

	A	B	C	D	E	F	G	H	J	K	M	N	P	Q	R	S	T	U	V
PH58	.250	.078	.090	.045	.092	.340	.170	.120	.040 MAX	.090	.100	.050	.009	.016 .020	.060	.345 MAX	.009 .011	.302	
PH58a	.240 .260					.330 .370		.180	.020 MIN	.125 MIN	.100	.033 MIN		.015 .021		.300 .350	.008 .014	.300	
PH58b						.350		.125				.060		.018			.010	.300	.225
PH58c	.245 .255					.345 .355	.172 .177	.180	.020 MIN	.125 MIN	.100 TYP			.015 .021		.300 .350	.008 .012	.300 TYP	.145 MIN
PH58e	.250					.350		.135				.050		.018			.010	.300	

49. OUTLINE DRAWINGS

PH62

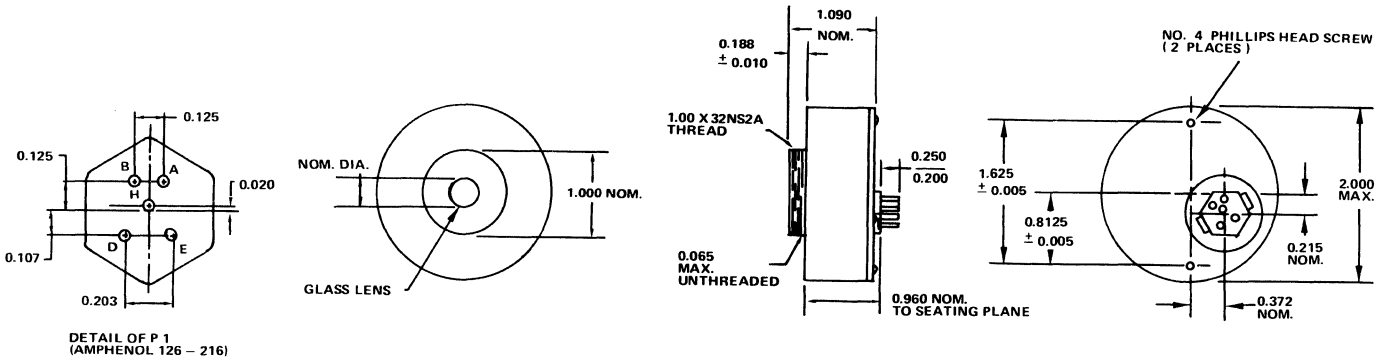

PH64

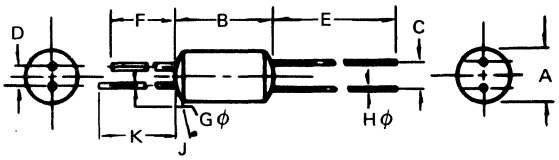

	A	B	C	D	E	F	G	H	J	K	DOT
PH64	.259 .275	.551 MAX	.125 .141	.092 .107	1.535 1.614	.275 .354	.017	.011			
PH64a	.311 .321	1.173 1.203	.195 .205	.182 .192	1.00	1.00	.027 .029	.024 .026	.010 .020	.393 .472	CELL SIDE
PH64b	.157	.315 MAX	.086	.035	.787 MIN	.433 MIN	.018	.012		.433 MIN	

PH65

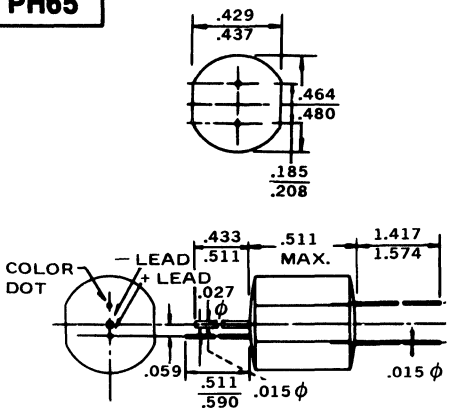

PH286

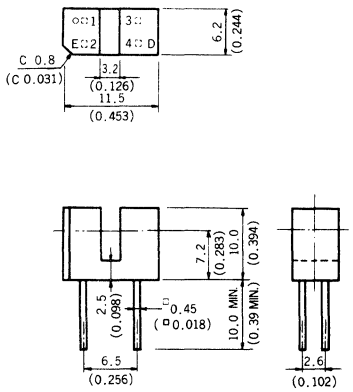

PH67

LENS MATERIAL: MOLDED CLEAR EPOXY

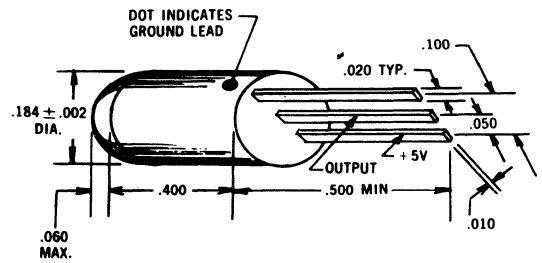

	A	B	C	D	E	Notes
PH67	.400	.500	.184	.050	.020	
PH67a	.460	.500	.185	.050	.020	w/Sen. ADJ.
PH67b	.460	.500	.185	.050	.020	

PH68

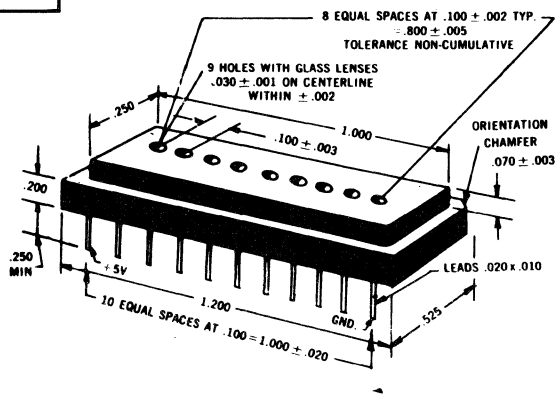

PH69

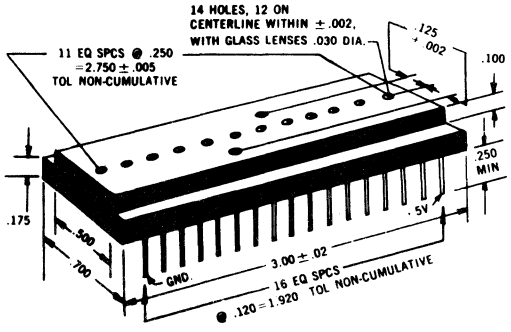

49. OUTLINE DRAWINGS

PH70

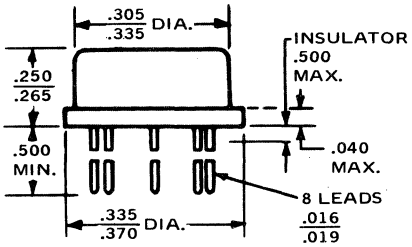

PH71

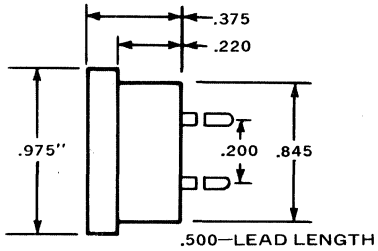

PH72

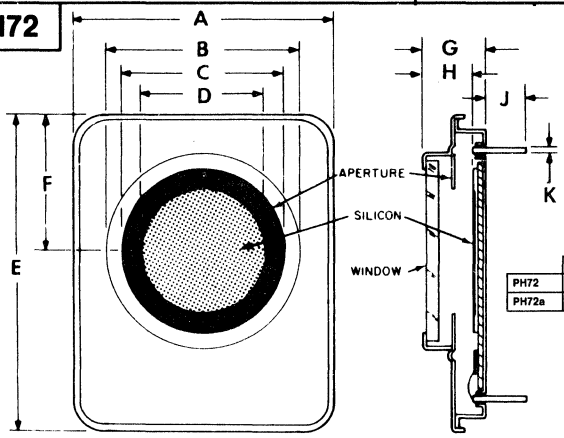

	A	B	C	D	E	F	G	H	J	K	M	N	P	Q
PH72	.945	.690	.529	.442	.488	1.14	.225	.180	.135	.015	.100	.168	.120	.900
PH72a	.945	.327	.236		.571	1.15	.197	.094	.135	.015	.100	.168	.120	.900

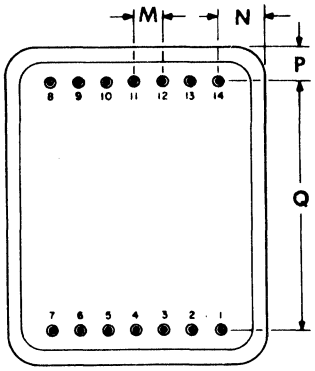

PH74

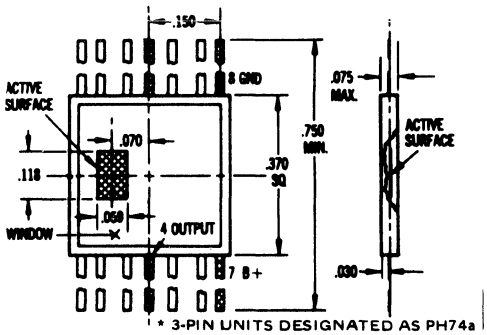

* 3-PIN UNITS DESIGNATED AS PH74a (NO TEST INPUT PIN) ARE ALSO AVAILABLE AS STANDARD ITEMS.

PH76

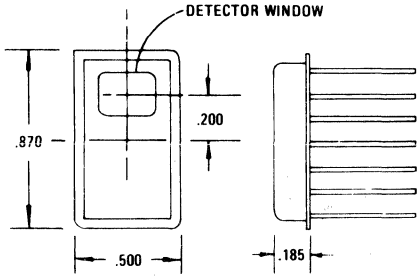

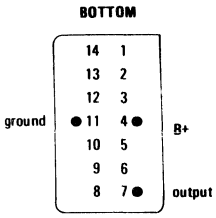

49. OUTLINE DRAWINGS

PH81

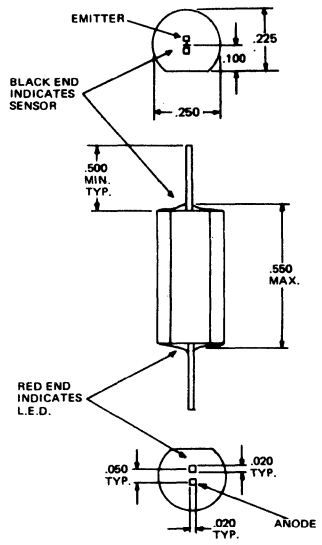

PH82

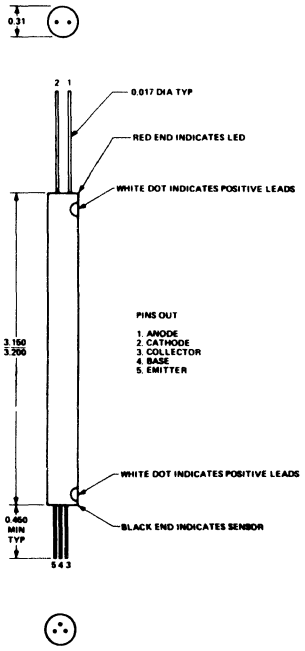

PIN 1 INDICATED BY NOTCH

PH83

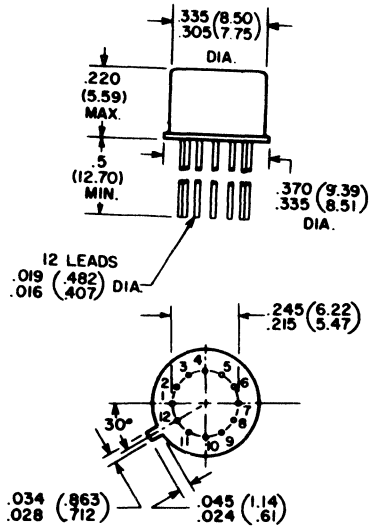

PH86

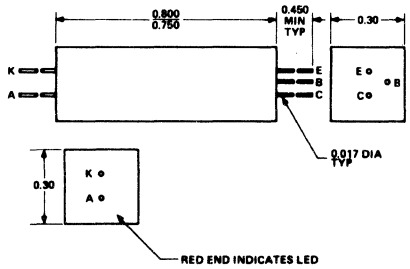

PH89

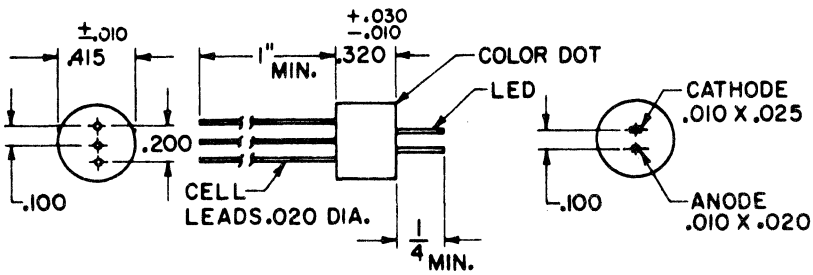

49. OUTLINE DRAWINGS

PH90

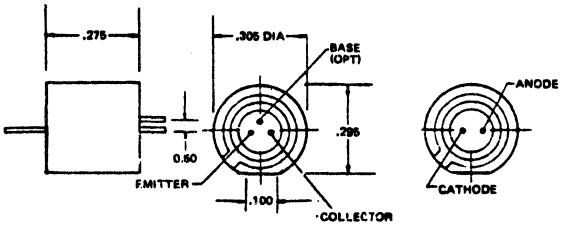

PH91

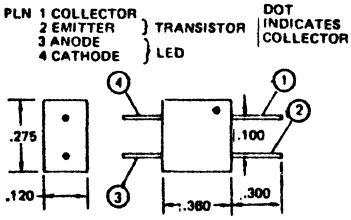

PH92

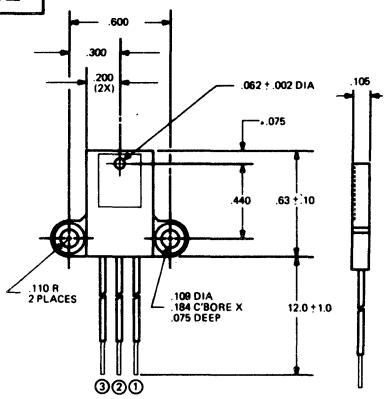

PH93

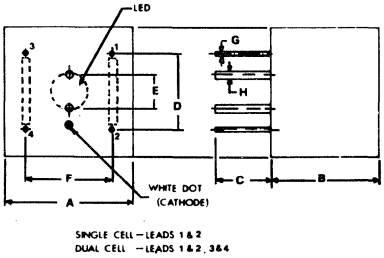

Dims.	Inches		Millimeters	
Ref.	Min.	Max.	Min.	Max.
A	.743 Sq.	.757 Sq.	18.95 Sq.	19.65 Sq.
B	.618	.632	15.80	16.55
C	.31 Nominal		8 Nominal	
D	.418	.432	10.80	11.00
E	.178	.192	4.52	4.88
F	.493	.507	12.45	12.85
G	.024	.026	.61	.64
H	.0385	.0415	.99	1.04

PH94

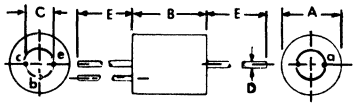

Dims.	Inches		Millimeters	
Ref.	Min.	Max.	Min.	Max.
A	.240	.260	6.096	6.604
B	.300	.330	7.62	8.38
C	.090	.110	2.286	2.794
D	.016	.019	.041	.048
E	.36	.39	9.14	9.91

PH95

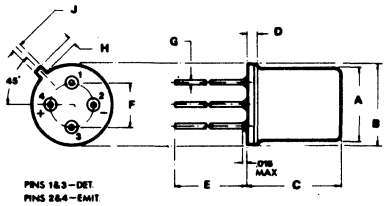

Dims.	Inches		Millimeters	
Ref.	Min.	Max.	Min.	Max.
A	.320	.330	8.12	8.39
B	.356	.364	9.05	9.25
C	.386	.406	9.81	10.20
D	.035	.045	.89	1.10
E	1.5	1.6	38.1	40.4
F	.197	.203	5.04	5.15
G	.016	.019	.40	.48
H	.037	.043	.94	1.10
J	.028	.034	.72	.86

PH96

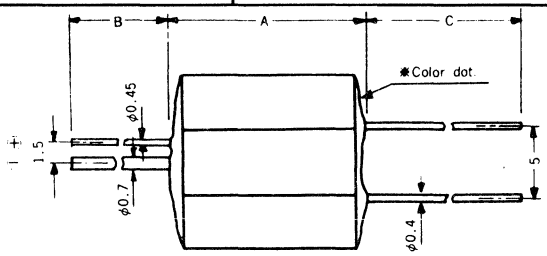

Body diameter D φ

unit : mm

	A	B	C	D
PH96	MAX 15.7	MIN 10	MIN 43	11.2φ
PH96a	MAX 17.0	MIN 8.5	MIN 18.5	10.0φ

49. OUTLINE DRAWINGS

PH100

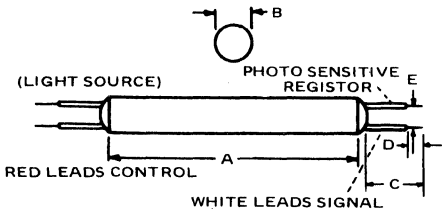

	A	B	C	D	E	REMARKS
PH100	2.25 2.50	.280	.300	.350 .385		RED CONT. WHITE SIGNAL
PH100a	2.715	.610 .640	.300 MIN	.350 .385	.200 .320	RED CONT. WHITE SIGNAL FLYING LEADS-HV

PH101

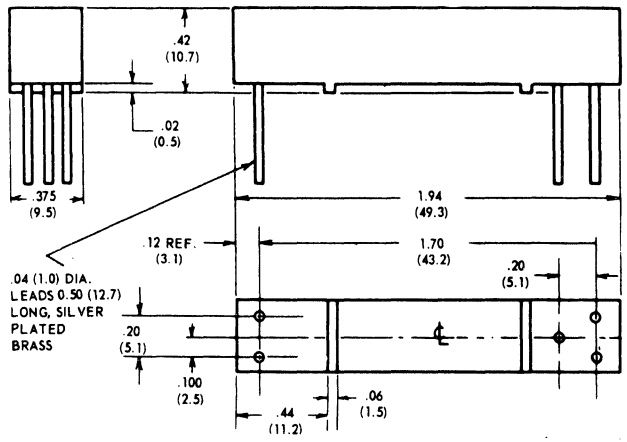

PH102

High Voltage — Epoxy Basing

Red Base — Control Circuit

Black Base — Signal Circuit

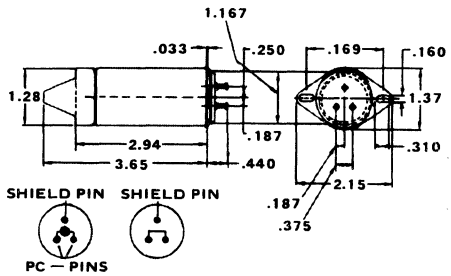

PH103

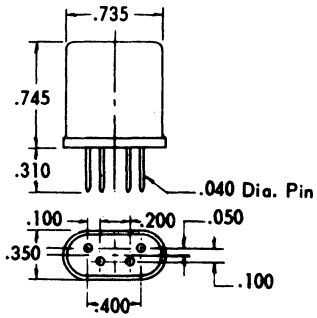

Pins 1 & 2 Control Circuit (Light Source)

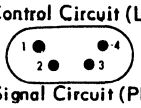

Pins 3 & 4 Signal Circuit (Photoresistor)

PH104

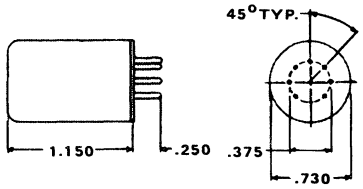

PH105

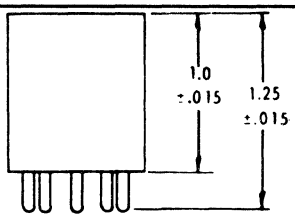

BOTTOM VIEW

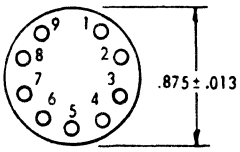

PH106

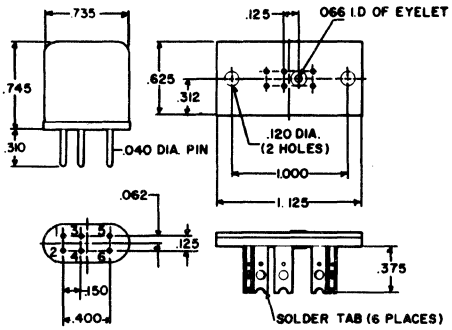

PH107

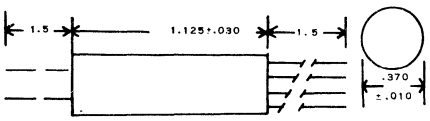

PH110

PH110a

FLANGE RECEPTACLE

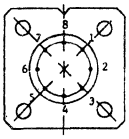

BOTTOM VIEW

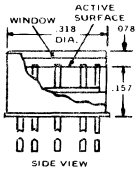

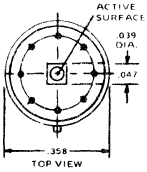

PH110

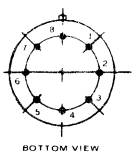

PH111

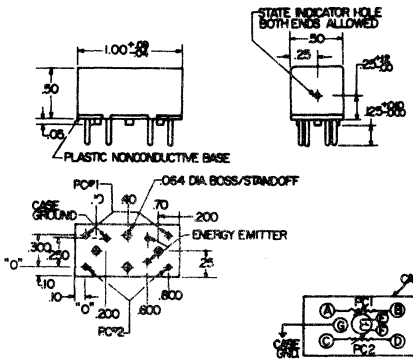

49. OUTLINE DRAWINGS

PH112

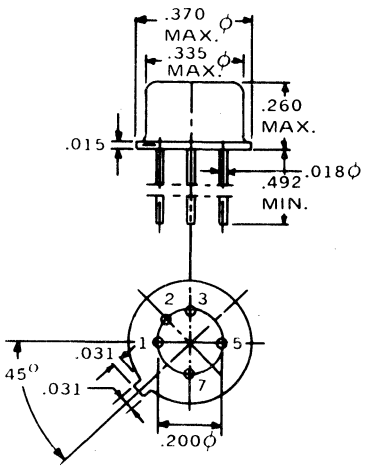

PH113

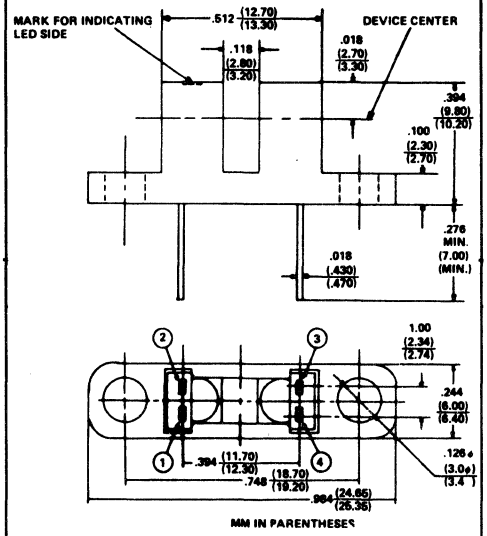

PH116

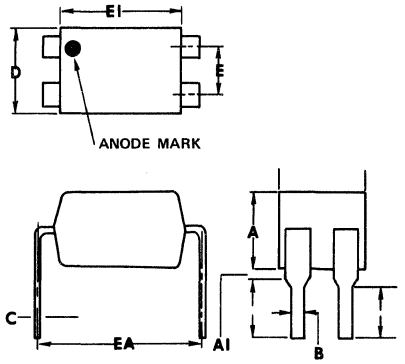

	A	A1	B	C	D	E	E1	EA	L	M	N
PH116	.143	.019	.019	.009	.180	.100	.240	.300	.106 MIN	.098 MIN	.179 MIN
PH116a	.137	.045	.047	.009	.181	.100	.255 TYP	.300	.106 MIN		
PH116b	.161	.019 MIN	.021 MAX	.009	.181 .200	.100	.244 .251	.300	.125 MIN		
PH116c	.137 TYP	.019 TYP	.019 TYP	.009 .010	.180 TYP	.090 .110	.250	.300	.106 MIN		

PH118

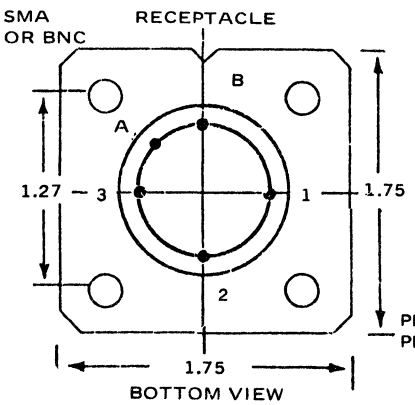

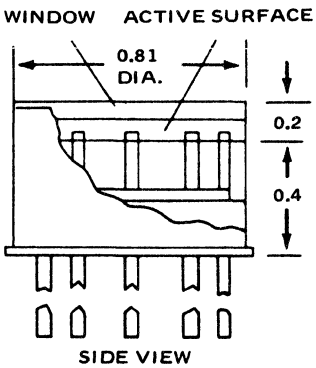

PH118, PH118b: A ABSENT, B = PIN 4
PH118a, PH118c: A = PIN 4; B = PIN 5

PH118,a

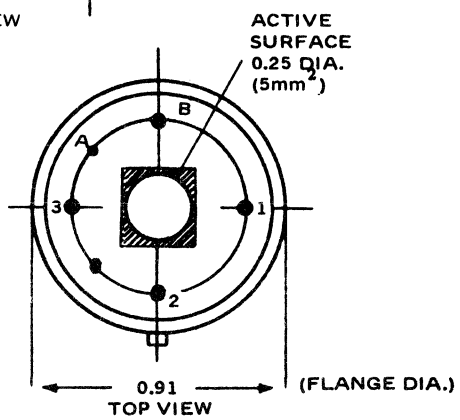

PH285

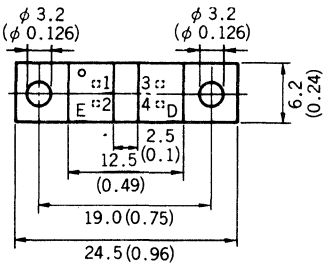

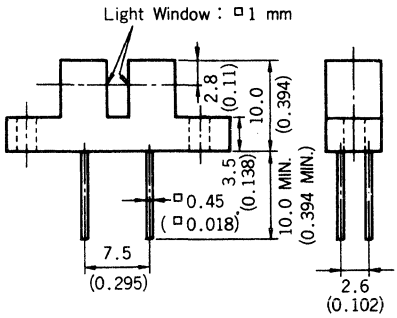

49. OUTLINE DRAWINGS

PH135

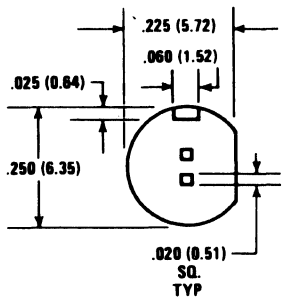

DIMENSIONS ARE IN
INCHES (MILLIMETERS)
0.XX ± 0.01 0.X ± 0.25
0.XXX ± 0.005 0.XX ± 0.13

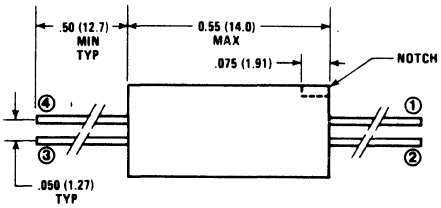

PH136

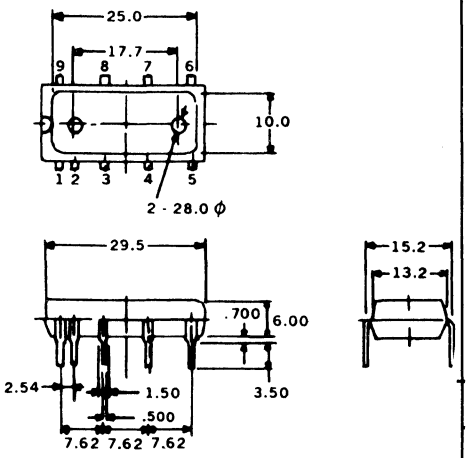

1. LED_1 ANODE
2. LED_1 CATHODE & LED_2 ANODE
3. LED_2 CATHODE
4. NO CONNECTION
5. NO CONNECTION
6. PHOTO SCR 1 CATHODE & SCR 2 ANODE
7. PHOTO SCR 2 GATE
8. PHOTO SCR 1 GATE
9. PHOTO SCR 1 ANODE & SCR 2 CATHODE

DIMENSIONS IN "MM"

PH129

1. ANODE
2. CATHODE
3. NC
4. MAIN TERMINAL
5. SUBSTRATE
6. MAIN TERMINAL

DIM	MILLIMETERS MIN	MILLIMETERS MAX	INCHES MIN	INCHES MAX
A	8.13	8.89	0.320	0.350
B	1.27	2.03	0.050	0.080
C	2.92	5.08	0.115	0.200
D	0.41	0.51	0.016	0.020
F	1.02	1.78	0.040	0.070
G	2.54	BSC	0.100	BSC
H	1.02	2.16	0.040	0.085
J	0.20	0.30	0.008	0.012
K	2.54	3.81	0.100	0.150
L	7.62	BSC	0.300	BSC
M	0°	15°	0°	15°
N	0.38	2.54	0.015	0.100
P	0.81	0.97	0.032	0.038
R	6.10	6.60	0.240	0.260

PH129a

1. ANODE
2. CATHODE
3. NC
4. EMITTER
5. COLLECTOR
6. BASE

PH129b

1. ANODE
2. CATHODE
3. NC
4. OUTPUT
5. GROUND
6. V_{CC}

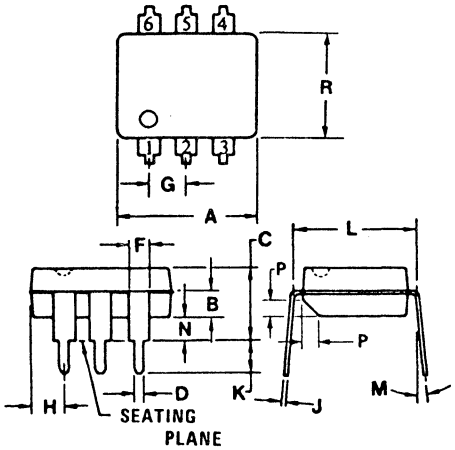

PH139

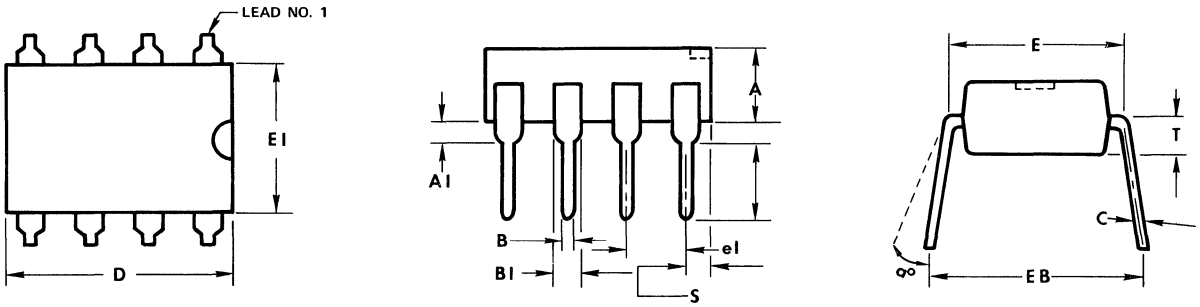

	A	A1	B	B1	C	D	E1	e1	EA	EB	L	a°	S	T
PH139	.115 .135	.020 .030	.015 .021	.054 .062	.008 .015	.365 .385	.245 .252	.090 .110	.290 .310	.300 .394	.120 .135		.025 .045	.057 .068
PH139a	.130 .150	.020 .030	.016 .020	.040 .050	.008 .012	.380 .400	.240 .260	.090 .110	.300 TYP		.110 MIN	0° 15°		

PH140

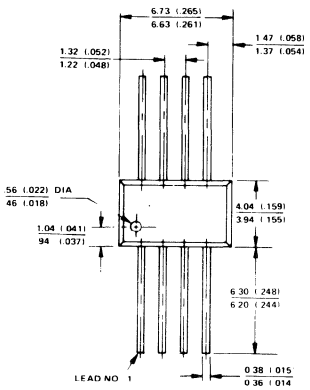

MM (INCH)

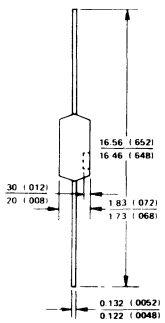

PH117

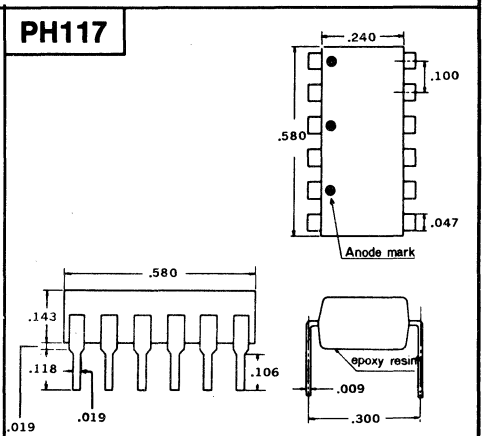

49. OUTLINE DRAWINGS

PH141

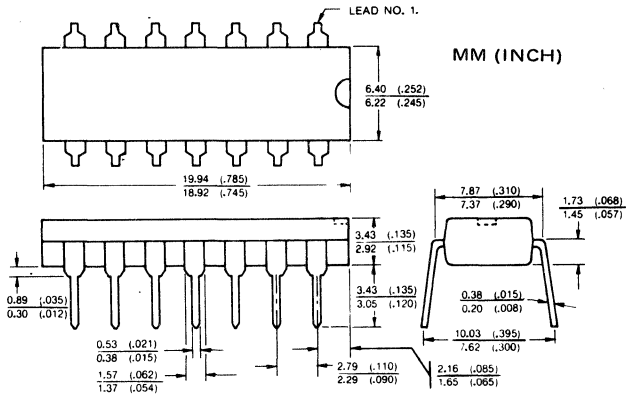

PH281

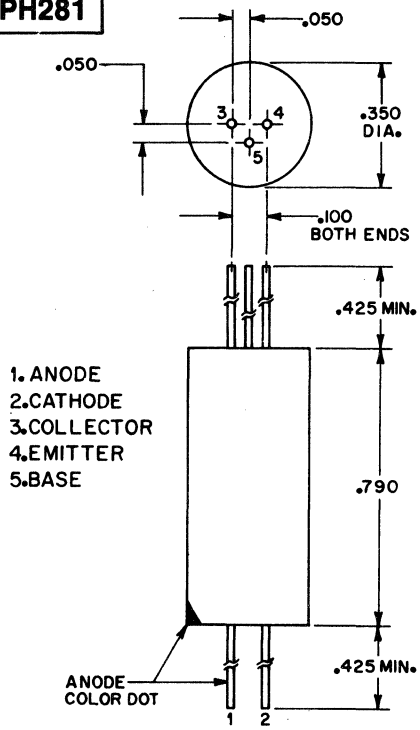

Pin No.	1	2	3	4	5
PH281	A	K	C	E	B
PH281a	A	K	GND	OUT	V_{CC}

PH144

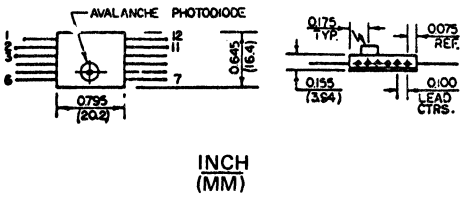

PH149

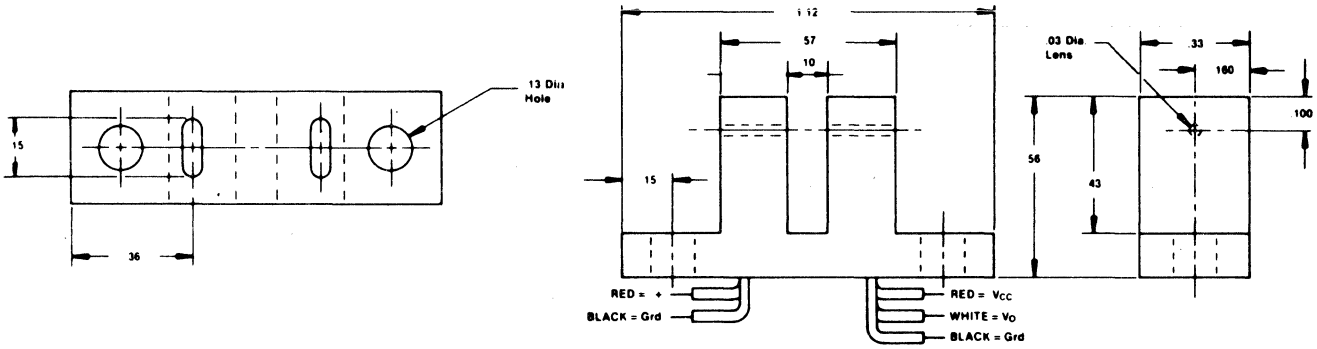

PH150

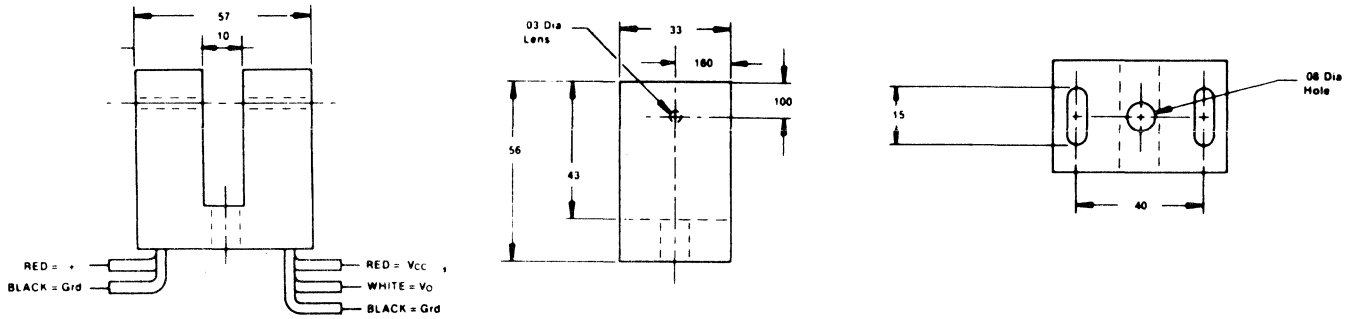

49. OUTLINE DRAWINGS

PH154

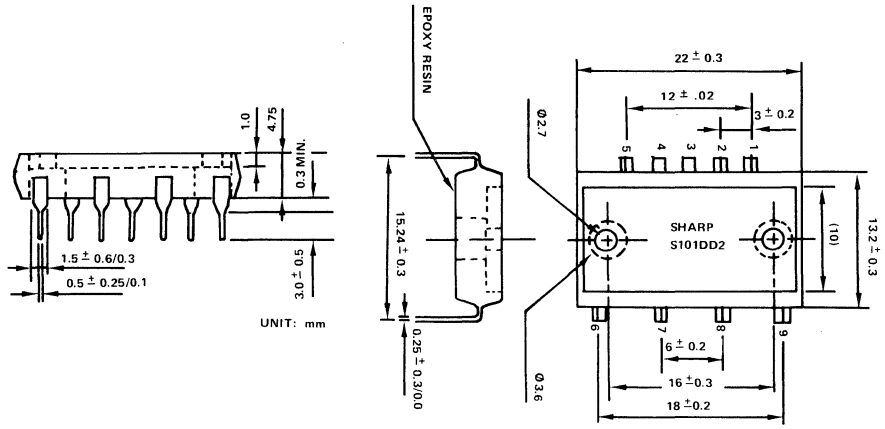

PH155

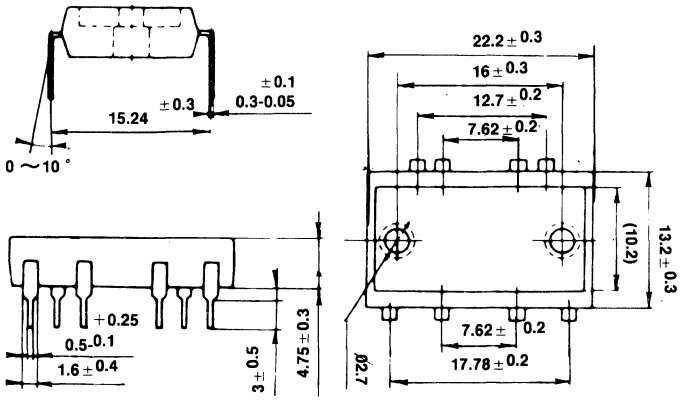

PH157

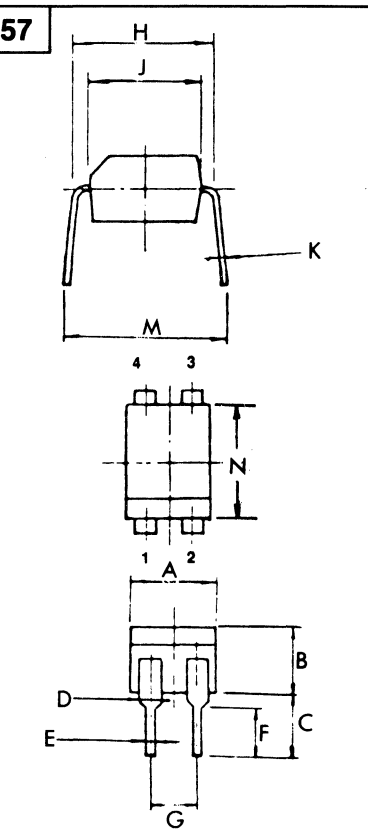

	A	B	C	D	E	F	G	H	J	K	M	N
PH157	4.58	3.65	3.5	1.2	0.5	2.7	2.54	7.62	6.4	0.25	7.85 8.53	6.4
PH157a		4.5	3.04 MIN	1.35 1.05	0.4 0.6	2.54 MIN	2.79 2.29	7.92 7.32	.175 .325			5.9 6.9

PH158

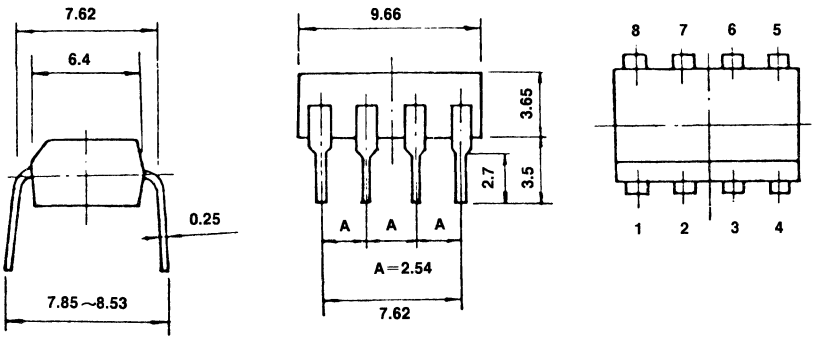

PH159

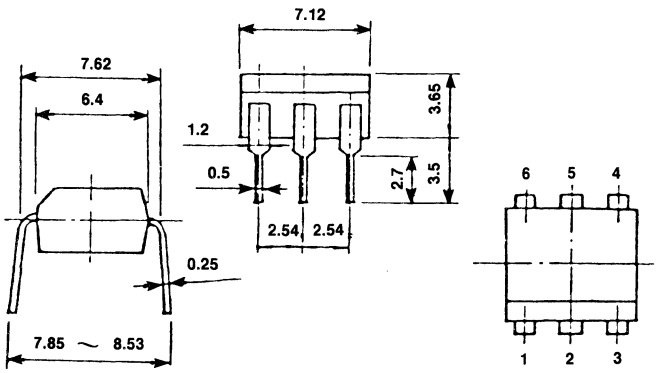

PH161

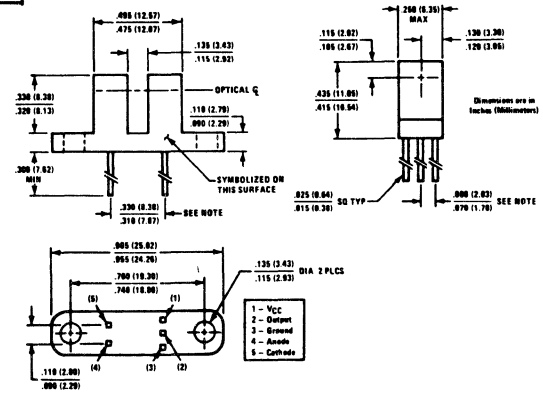

49. OUTLINE DRAWINGS

PH162

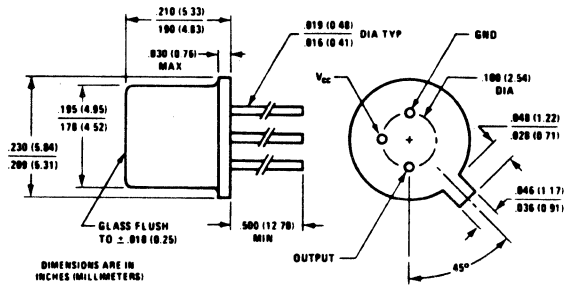

PH164

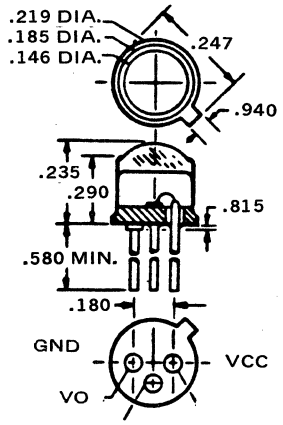

PH165

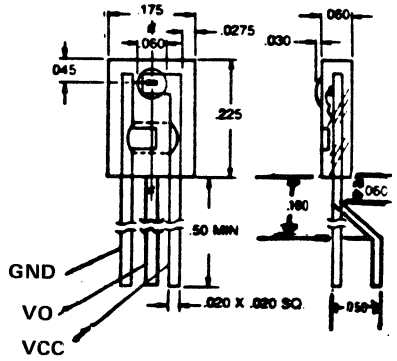

PH169

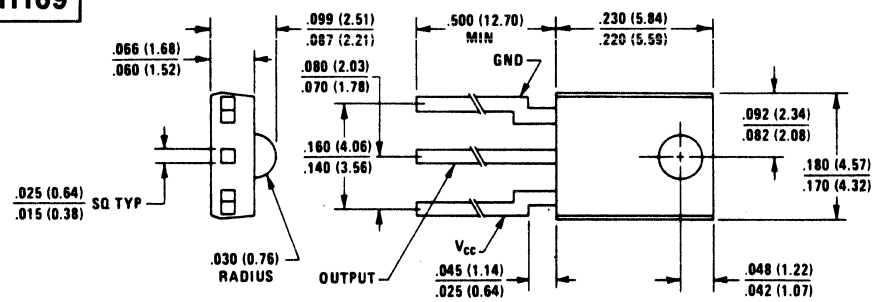

PH172

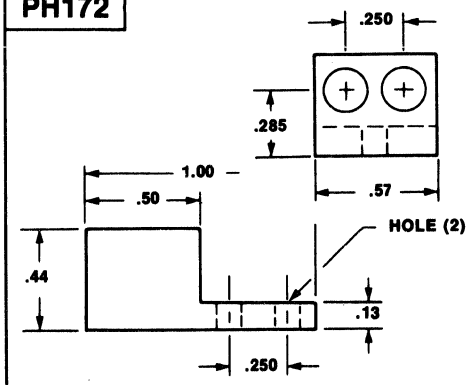

PH128

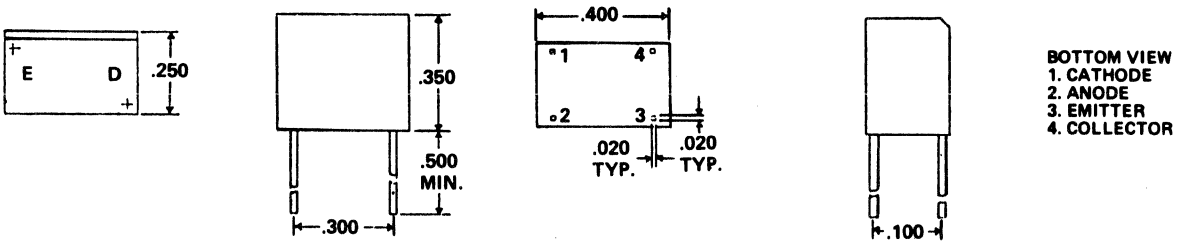

BOTTOM VIEW
1. CATHODE
2. ANODE
3. EMITTER
4. COLLECTOR

49. OUTLINE DRAWINGS

PH175

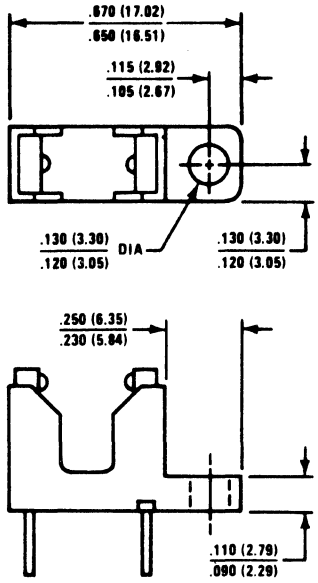

PH176

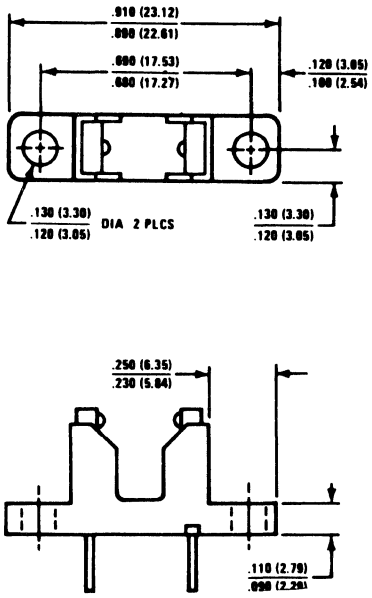

PH269

SIDE NOTE: LEAD 1 — ANODE
LEAD 2 — INPUT CATHODE
LEAD 3 — INPUT ± OP AMP GROUND
LEAD 4 — V−
LEAD 5 — OUTPUT
LEAD 6 — V±

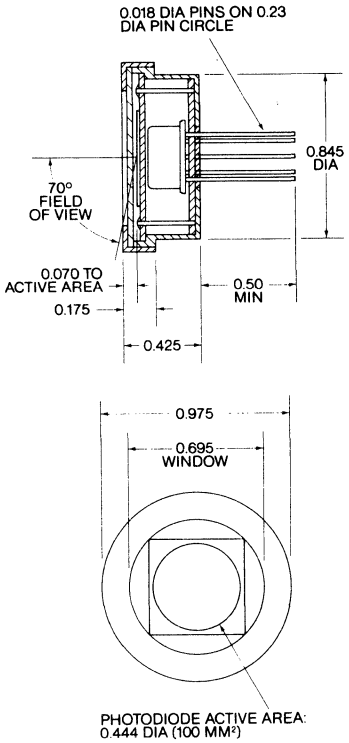

PH277

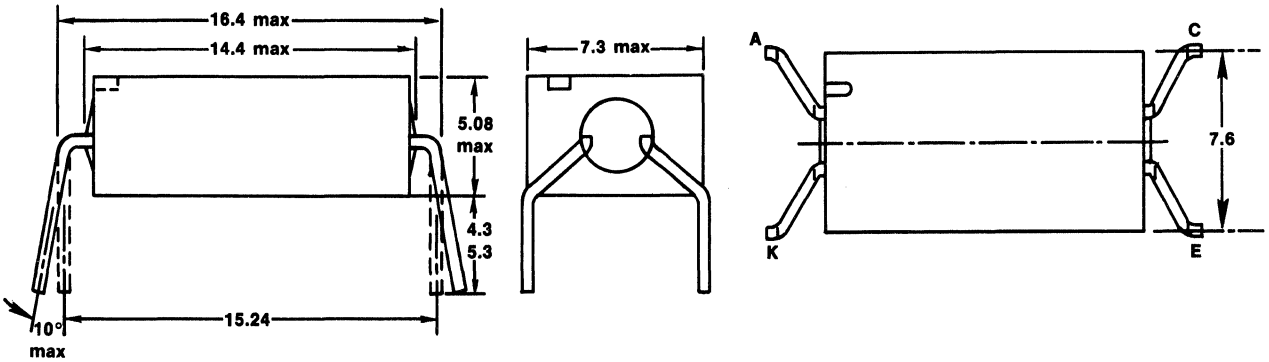

PH278

80,000 V

	A
PH 278	3.105 / 3.155
PH 278a	.825 / .875

3 LEADS $\frac{0.019}{0.016}$ DIA.

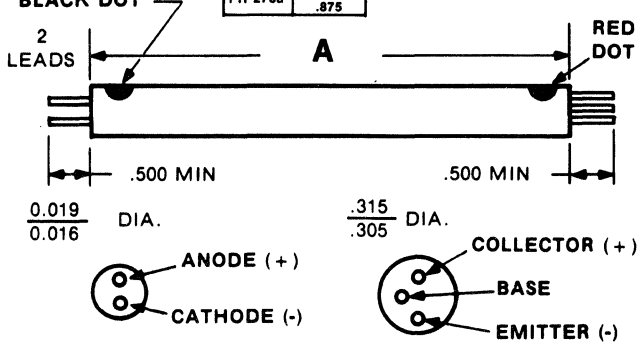

PH279

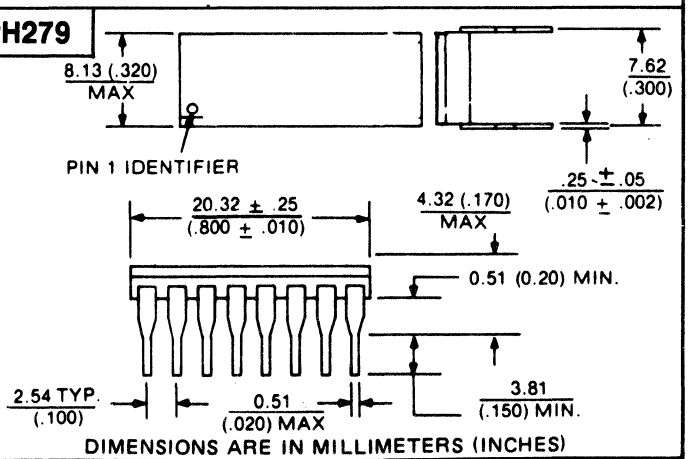

DIMENSIONS ARE IN MILLIMETERS (INCHES)

49. OUTLINE DRAWINGS

PH290

Dimensions in inches (millimeters)

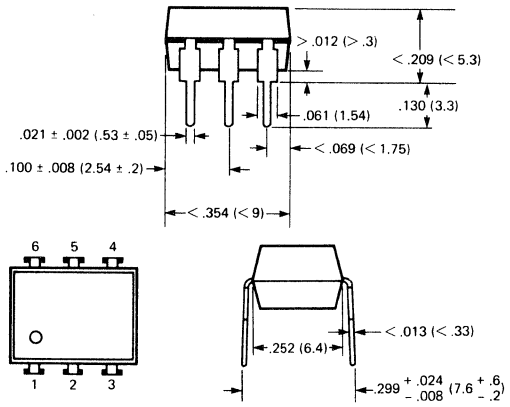

Airpath ≥ 7.4 mm²
Creeping Distance ≥ 8.6 mm²
Weight = approximately 0.7 g

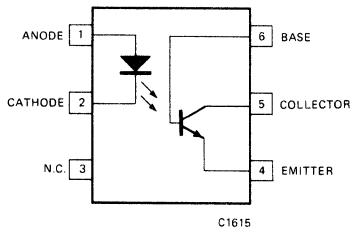

Fig. 1. Equivalent Circuit

PH291

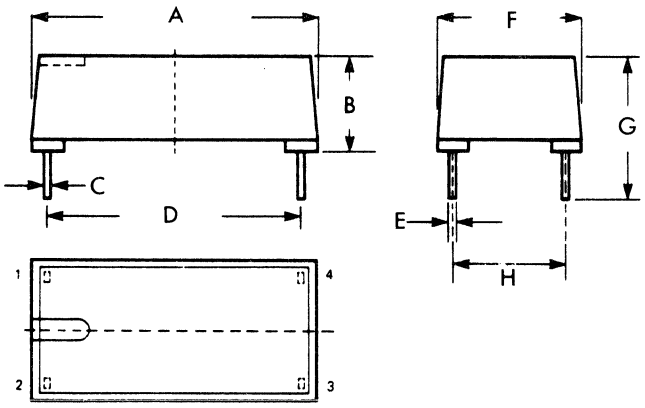

	A	B	C	D	E	F	G	H
PH291	.693 .709	.228 .244	.016	.600	.020	.370 .386	.346 .370	.300
PH291a	.496 .512	.228 .244	.016	.402	.020	.276 .291	.346 .370	.200
PH291b	20.2 20.6	5.8 6.2	.63	17.78	.5	9.4 9.8	8.8 9.4	7.62

PH292

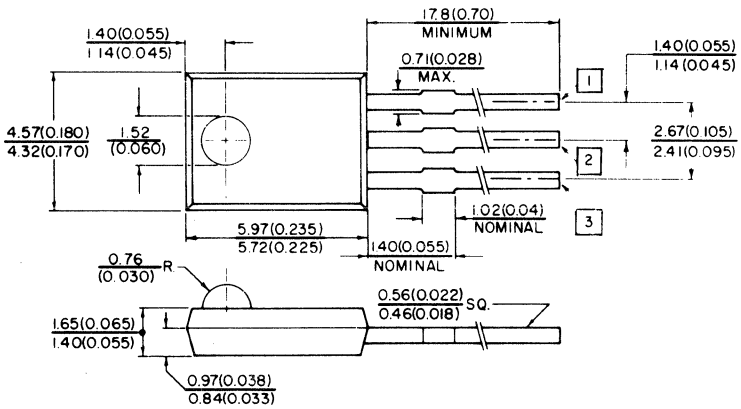

PH293

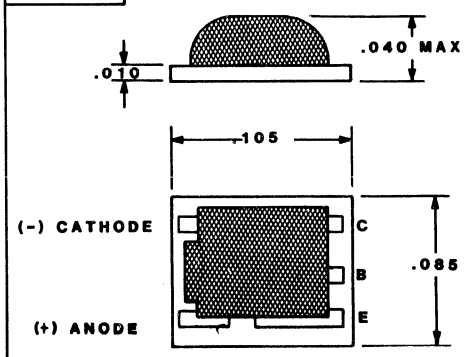

49. OUTLINE DRAWINGS

PH295

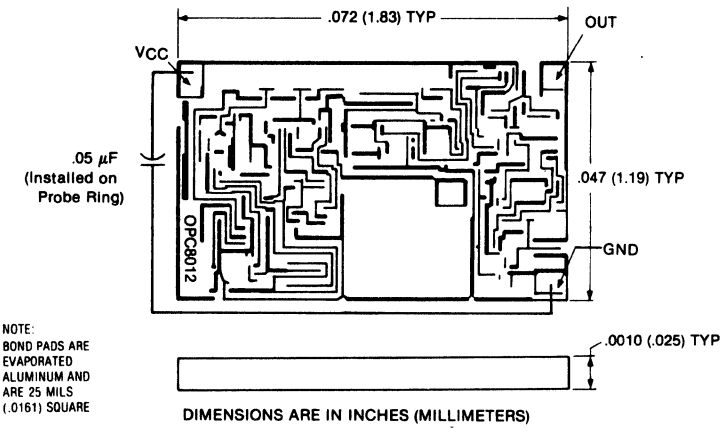

NOTE:
BOND PADS ARE EVAPORATED ALUMINUM AND ARE 25 MILS (.0161) SQUARE

PH296

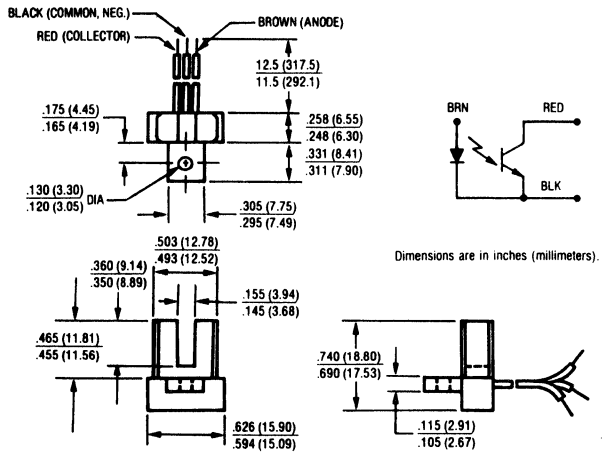

PH299

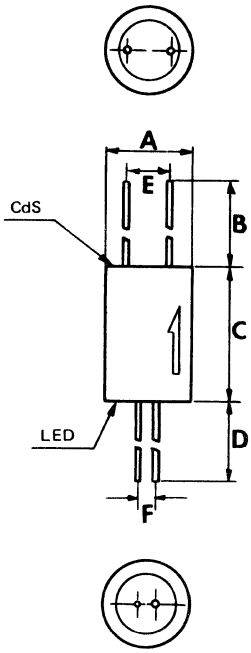

	A	B	C	D	E	F
PH299	.314 .338	1.18 MIN	.511 .551	.472 MIN	.196 TYP	.059 TYP
PH299a	.362 .385	.708 MIN	.905 1.06	.708 MIN	.196 TYP	.137 TYP

PH302

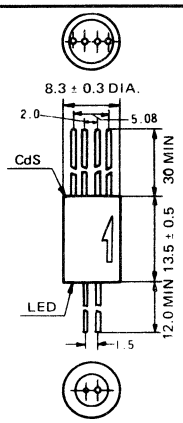

49. OUTLINE DRAWINGS

PH303

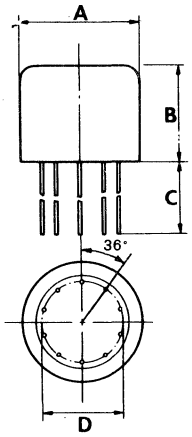

	A	B	C	D
PH303	.570 .610	.511 MAX	.708 .866	.393 TYP
PH303a	.570 .610	.511 MAX	.314 MIN	.393 TYP

PH305

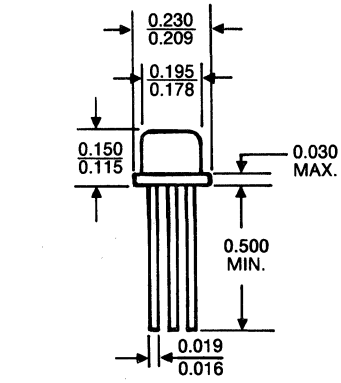

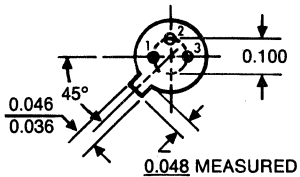

0.048 MEASURED FROM MAX. DIA.
0.028 OF ACTUAL DEVICE

PH306

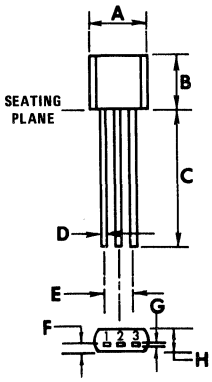

	A	B	C	D	E	F	G	H
PH306	.178 .183	.178 .183	.500 MIN	.016 .022	.095 .105	.025 REF	.014 .016	.078 .082

PH307

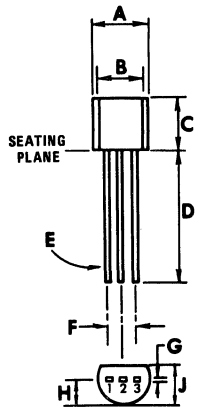

	A	B	C	D	E	F	G	H	J
PH307	.175 .205	.135 MIN	.170 .210	.500 MIN	.016 .022	.095 .105	.014 .016	.080 .105	.125 .165

PH308

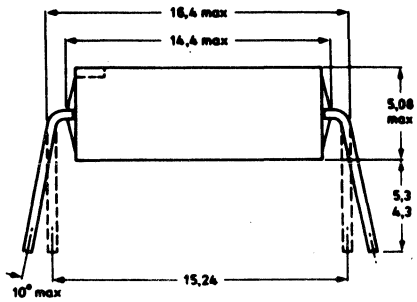

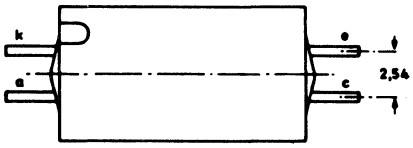

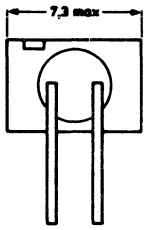

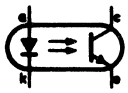

49. OUTLINE DRAWINGS

PH309

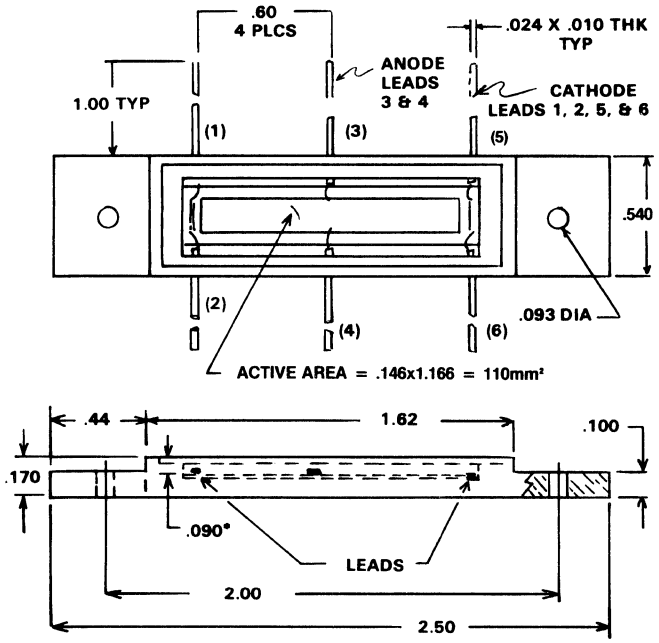

PH319

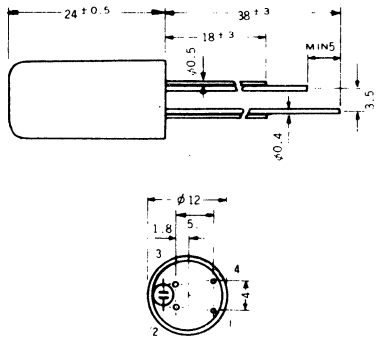

PH328

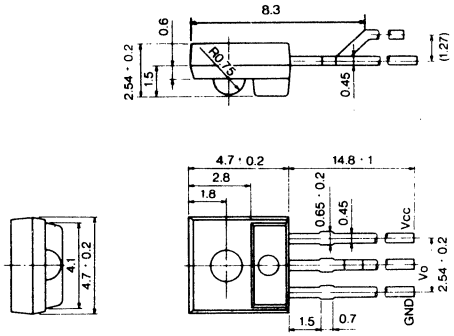

PH310

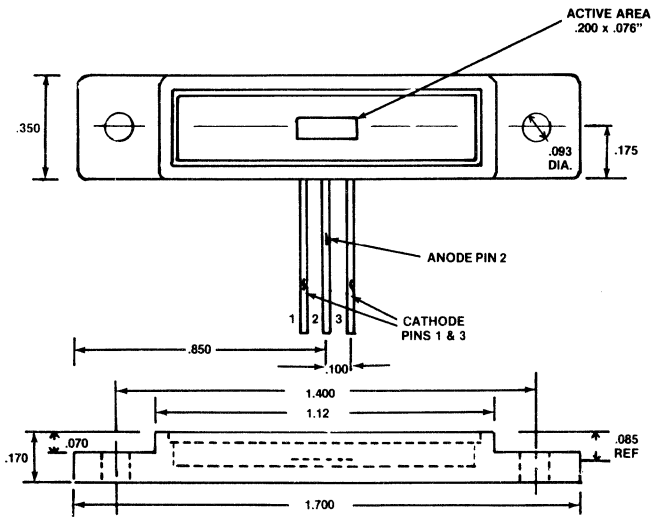

PH311

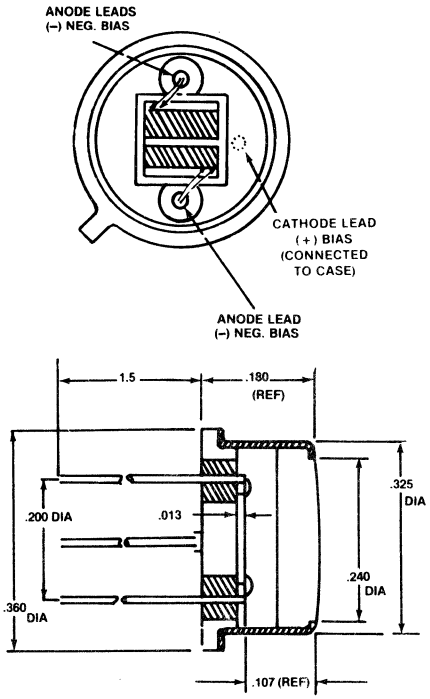

49. OUTLINE DRAWINGS

PH312

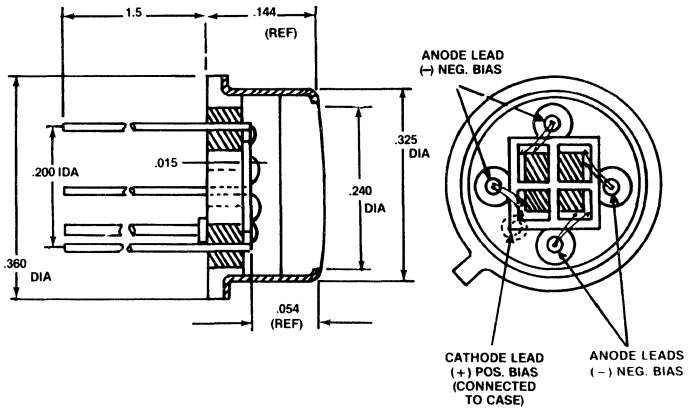

PH313

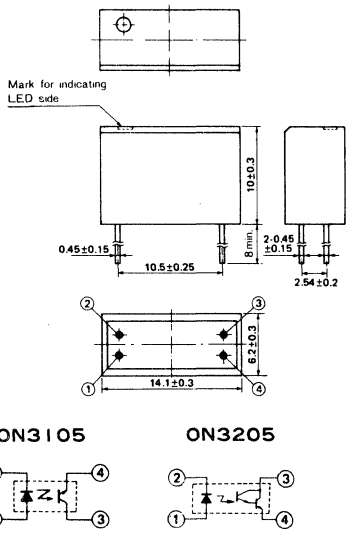

PH314

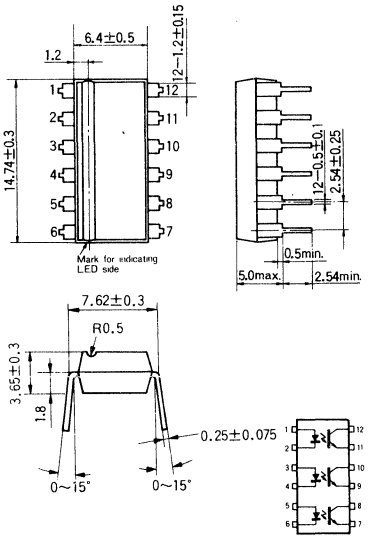

PH317

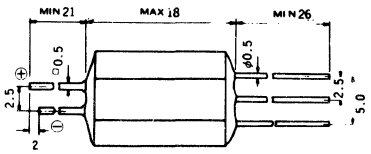

Body diameter 10.0

PH315

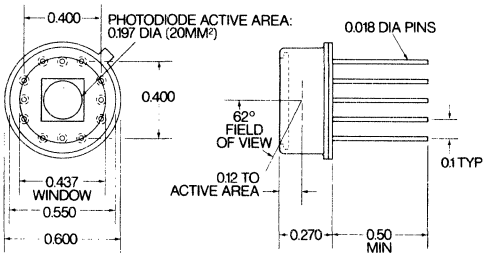

PH316

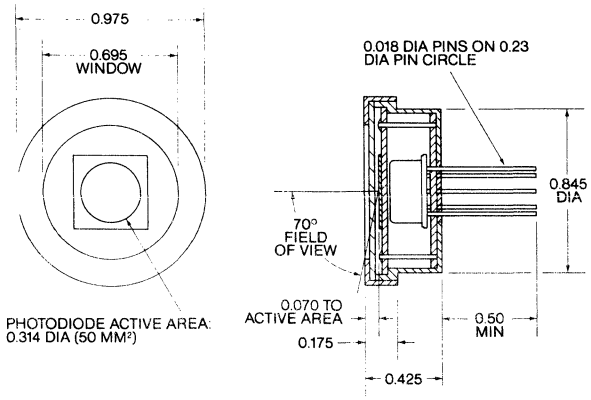

PH318

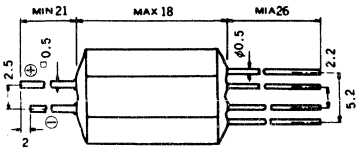

unit : mm

Body diameter 10.0

49. OUTLINE DRAWINGS

PH321

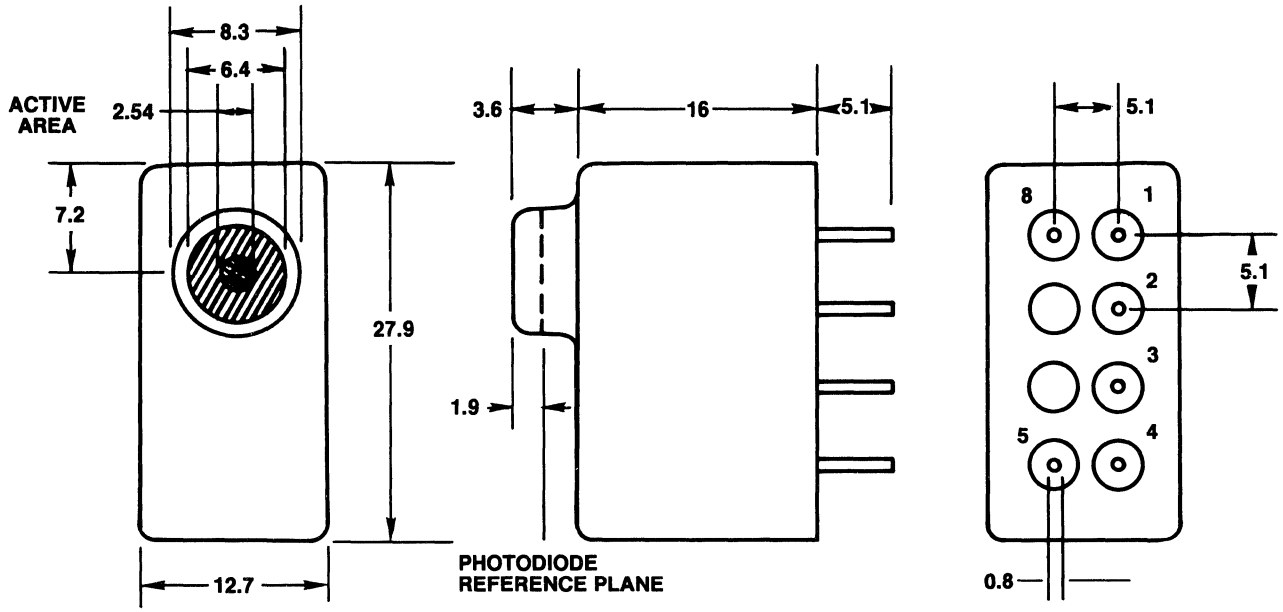

PH323

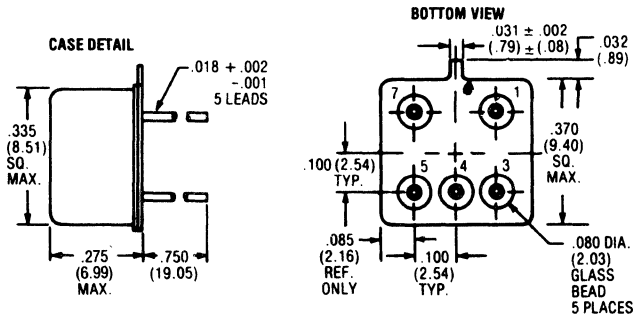

PH324

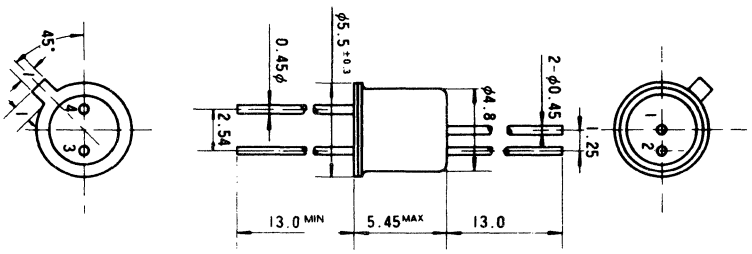

PH330

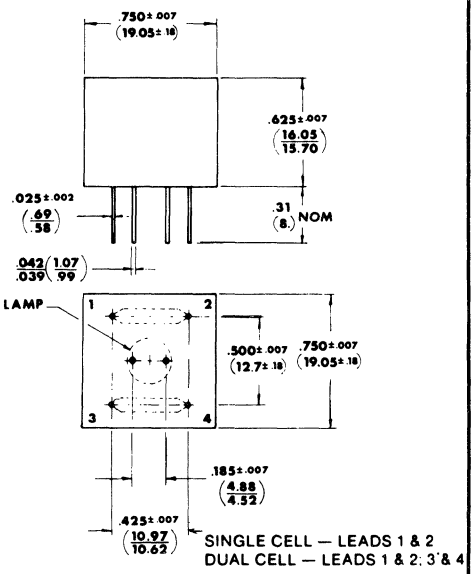

49. OUTLINE DRAWINGS

PH329

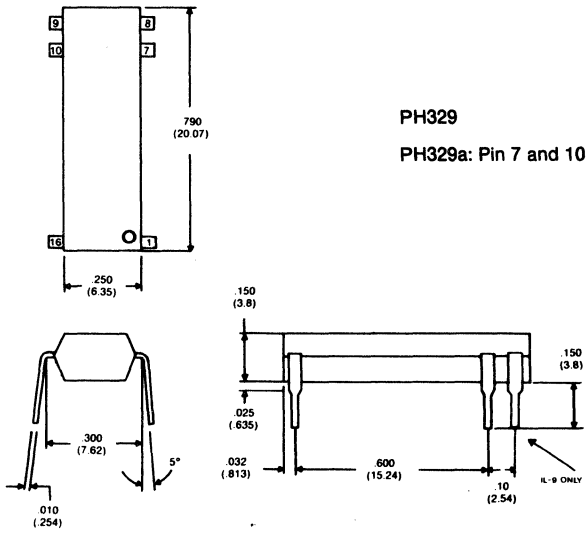

PH329

PH329a: Pin 7 and 10 Omitted

PH331

PL Package

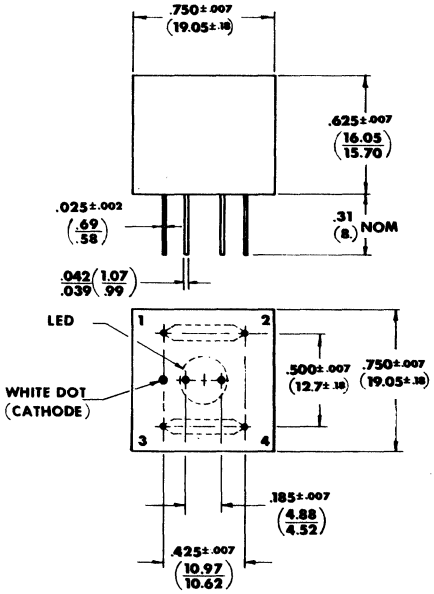

PH332

PLM Package

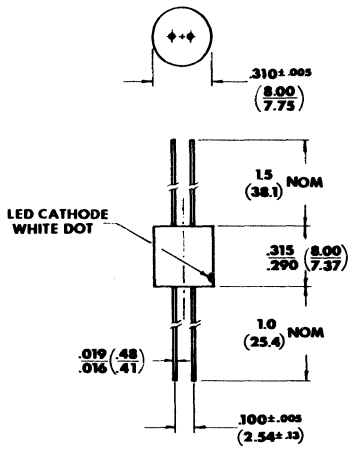

PH333

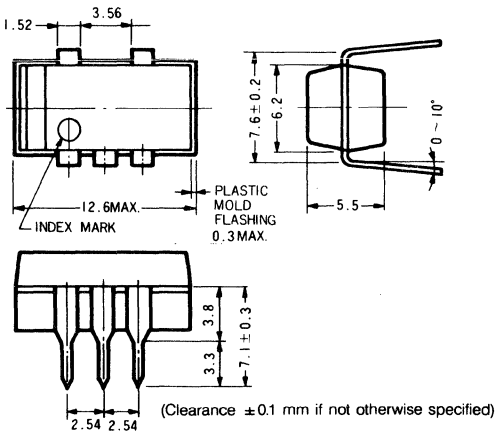

(Clearance ±0.1 mm if not otherwise specified)

PH334

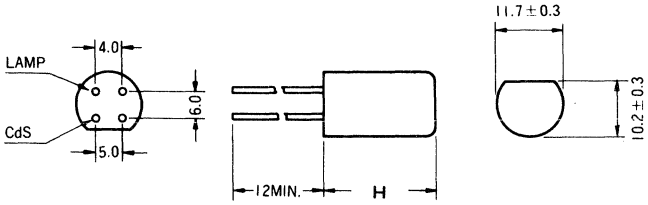

	H
PH334	17.5 / 18.5
PH334a	14.5 / 15.5

49. OUTLINE DRAWINGS

PH335

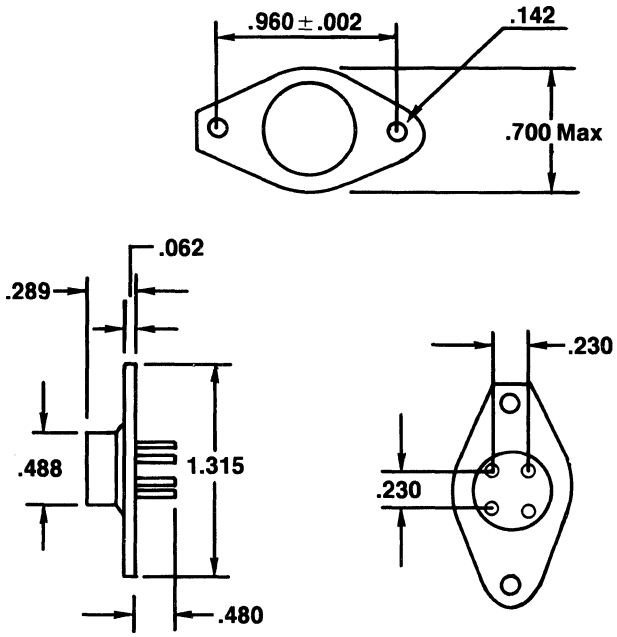

PH338

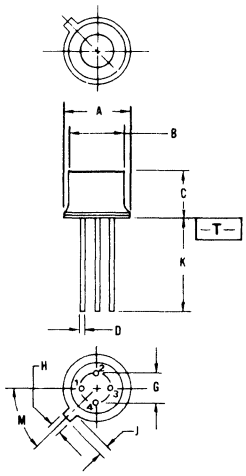

NOTES:
1. DIMENSIONS A AND H ARE DATUMS AND T IS A DATUM SURFACE.
2. LEAD POSITIONAL TOLERANCE AT SEATING PLANE: ⌖ Ø 0.036 (0.014) Ⓜ | T | A Ⓜ | H Ⓜ
3. DIMENSIONING AND TOLERANCING PER Y14.5, 1973.

DIM	MILLIMETERS MIN	MILLIMETERS MAX	INCHES MIN	INCHES MAX
A	5.30	5.38	0.209	0.212
B	4.64	4.69	0.183	0.185
C	3.42	3.60	0.135	0.142
D	0.40	0.48	0.016	0.019
G	2.54 BSC		0.100 BSC	
H	0.91	1.16	0.036	0.046
J	0.83	1.21	0.033	0.048
K	12.70	–	0.500	–
M	45° BSC		45° BSC	

PH336

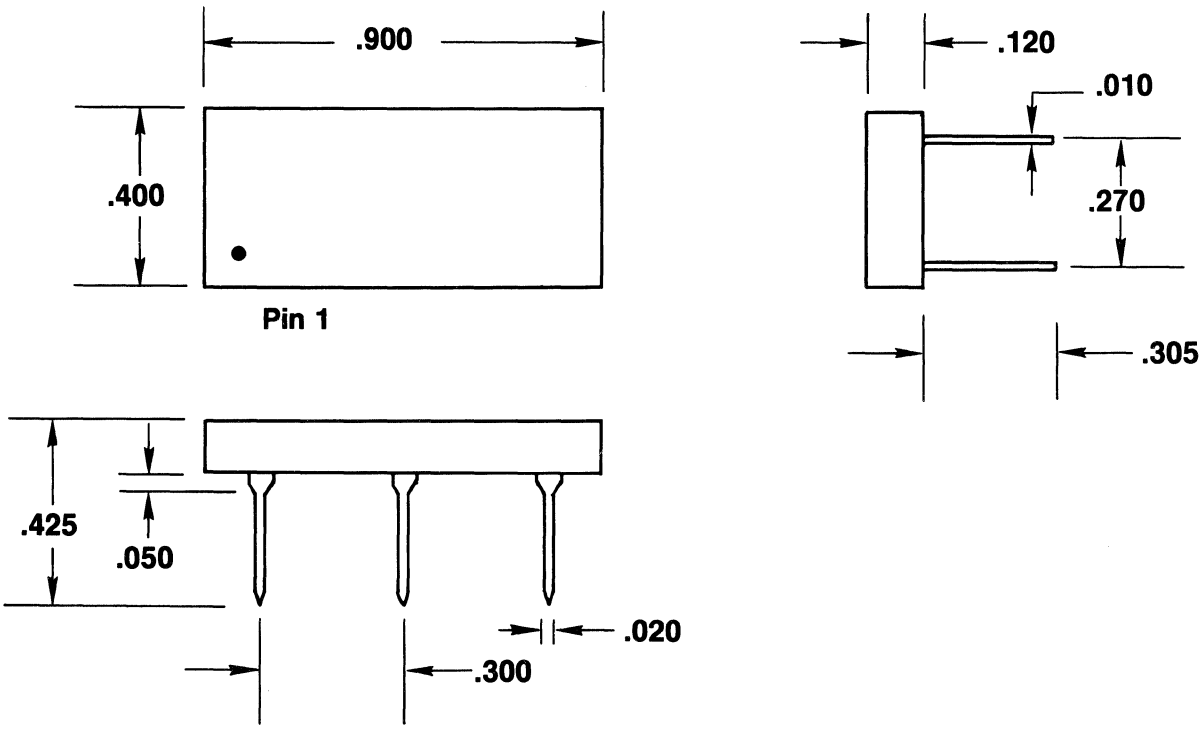

49. OUTLINE DRAWINGS

PH337

Dimensions in mm

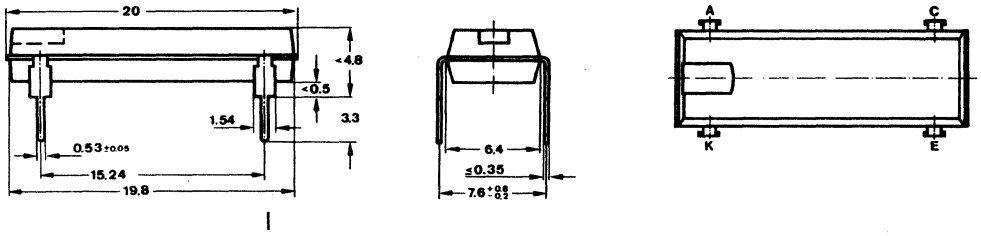

PH339

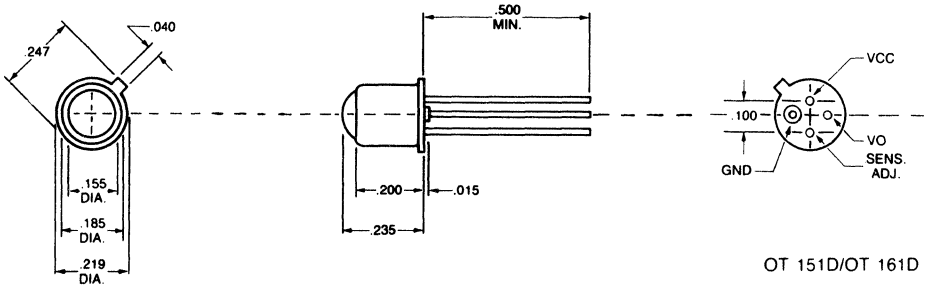

OT 151D/OT 161D

PH340

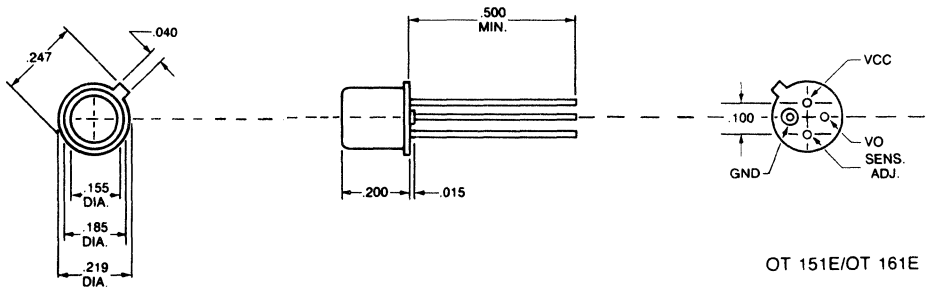

OT 151E/OT 161E

PH341

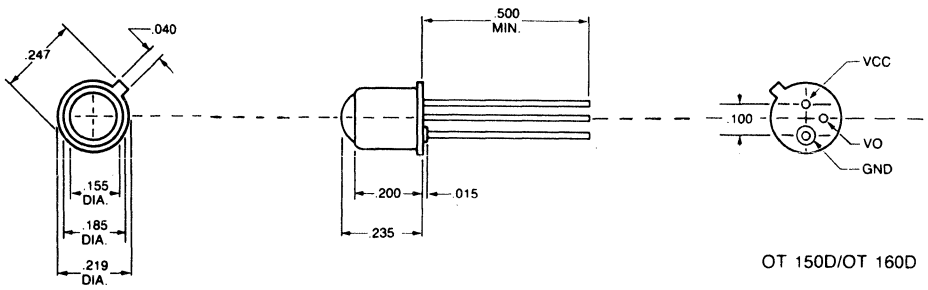

OT 150D/OT 160D

49. OUTLINE DRAWINGS

PH342

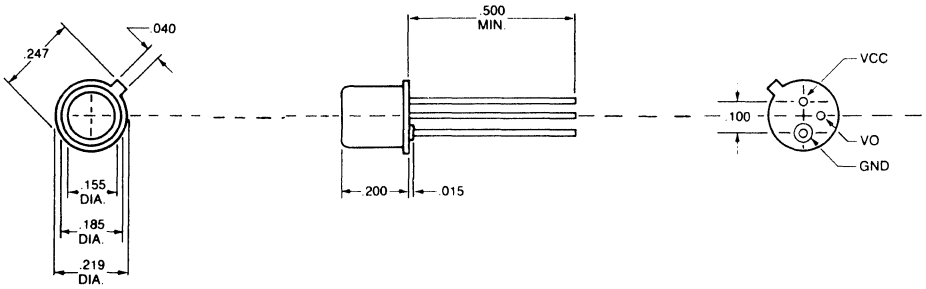

PH343

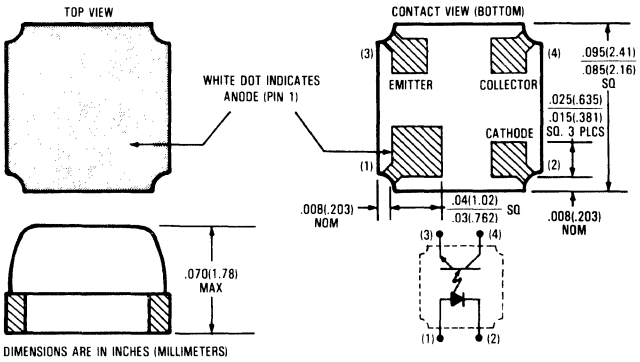

PH16

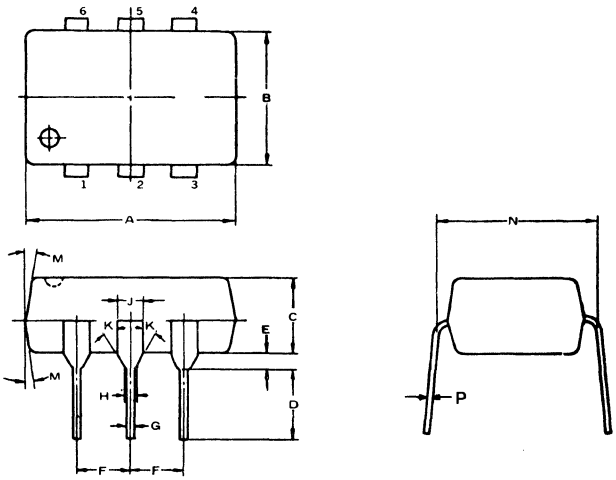

	A	B	C	D	E	F	G	H	J	K	M	N	P
PH16	.330 .370	.240 .260	.180	.125 MIN	.020 MIN	.100	.015 .021	.033 MIN				.300	
PH16a	.366	.232 .271	.118 .157	.118 .157	.015 .039	.099	.017	.027	.047	30°	8°	.280 .319	
PH16b	.319 .350	.244 .255	.153 .169	.087 .106	.035 .047	.099	.014 .020	.029 .037	.044 .055			.307 .324	.007 .011
PH16c	.393 MAX	.256 MAX	.157 MAX	.100 MIN	.020 MIN	.100	.014 .026		.041 .053			.290 .310	.008 .014
PH16d	.334		.183	.130	.025	.100	.020					.300	.011
PH16e	.334 .342	.244 .251	.137 MAX	.122 .141	.019 MIN	.100	.017					.291 .307	.009
PH16f	.350	.250	.125				.018					.300	.010
PH16g	.340	.250	.120	.150	.032	.015 .021	.100		.050			.300	.008 .012
PH16h	.330 .370	.242	.175 MAX	.125 MIN	.020 .060	.100	.016 .020		.060			.300	.008 .014
PH16j	.345 .365	.245 .265	.150	.150	.025	.090 .110	.018 .022					.300	.010 .014
PH16k	.364		.138	.098 MIN	.035	.100	.020	.047				.299	
PH16m	.280	.240	.151	.106	.031	.100	.019		.047			.300	.009
PH16n	.280	.240	.143	.106	.031	.100	.019		.047			.300	.009
PH16p	.344 .383	.236 .275	.118 .157	.098 MIN	.016 .055	.100	.019		.047			.300	
PH16r	.350	.250	.180 MAX	.125 MIN	.020 MIN	.100 TYP	.015 .021	.033 MIN				.300 TYP	.008 .012
PH16s	.350 MAX			.180	.020 MIN	.100	.015 .022					.326 MAX	.008 .012
PH16t	.344	.260	.177	.100	.020	.100	.019					.300	.011
PH16u	.300		.180	.150	.020							.320	.010
PH16v	.365 MAX	.270 MAX	.130 MAX	.150	.045	.110 MAX	.022 MAX		.070 MAX			.300	.014 MAX
PH16w	.365 MAX	.270 MAX	.160 MAX	.150	.015	.110 MAX	.022 MAX		.070 MAX			.300	.014 MAX
PH16x	.330 .385	.260 .280	.140 MAX	.100 MIN	.020 MIN	.090 .110	.015 .021		.050 .070	45° REF	NA	.290 .310	.008 .015
PH16y	.330 .385	.260 .280	.180 MAX	.120 MIN	.020 MIN	.090 .110	.015 .020		.050 .070	45° REF	NA	.300	.008 .012
PH16z	.330 .350	.225 .280	.185 MAX	.100 MIN	.015 MIN	.090 .110	.016 .020		.040 .070		NA	.300	.008 .012
PH16aa	.370 .390	.240 .260	.165 MAX	.105 MIN	.020 MIN	.090 .110	.025 MAX		.063 MAX	50° TYP	NA	.290 .310	.007 .013
PH16ab	.273 .293	.236 .275	.118 .157	.098 MIN		.100	.019				NA	.229	.011
PH16ac	.320 .360	.240 .260	.195 MAX	.125 .150	.020 .070	.100	.015 .021	.040 MIN	.070 MAX	NA	NA	.300	.008 .012
PH16ad	.351 MAX		.180 MAX	.122 .154	.020 MIN	.100	.016 .022				NA	.300	.008 .012
PH16ae	.345 .384	.236 .276	.118 .157	.098 MIN	.015 MIN	.100	.020		.047			.299	
PH16af	.320 .350	.240 .260	.185 MAX	.100 .150	.015 MIN	.100	.016 .020		.040 .070	NA	NA	.300	.008 .012
PH16ag	.272 .280	.244 .252	.138 .142	.118	.023 MIN	.100	.019 .023	.061		NA	NA	.300	.010 .014
PH16ah	.334 .342	.248 .255			.02	.100				NA	NA	.291 .307	
PH16ai	.300 MAX			.122 .154	.020 MIN	.100	.010			NA	NA	.327	.008 .012
PH16aj	.300 MAX			.122 .154	.012 MIN	.100	.010			NA	NA	.378 MAX	.008 .012
PH16ak	.325 .364	.232 .272		.100 MIN	.020 MIN	.090 .110	0.4 0.6		.041 .053	NA	NA	.288 .312	.007 .013
PH16am	.300		.200	.153 MAX	.020	.100		.022					
PH16an	.346	.252	.200 MAX	.130	.020 MAX	.100	.019 .023		.061			.291 .331	.014 MAX
PH16ao	.362 TYP	.255	.137	.160 MIN	.019	.100 TYP	.019 NOM	.047 TYP	.047 TYP			.300 NOM	.009 .010
PH16ap	.340 .360	.240 .260	.130 .150	.130 .150	.020 .030	.100 TYP	.016 .020	.048 .052				.300 TYP	.008 .012

49. OUTLINE DRAWINGS

PH344

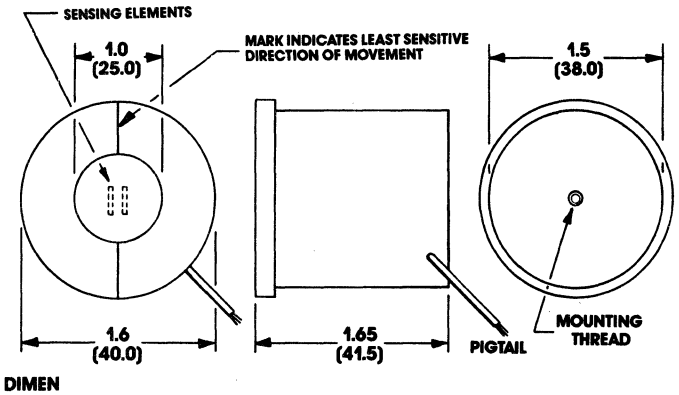

PH345

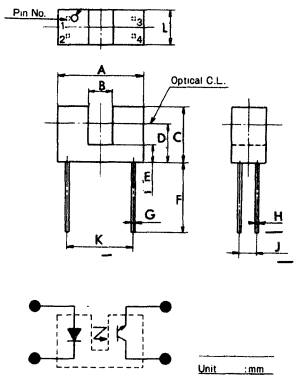

Suffix	A	B	C	D	E	F	G	H	J	K	L
PH345	12.3	3.3	7.8	5.3	2.3	14.8	0.4	0.3	2.34	9.3	4.8
	12.7	3.7	8.2	5.7	2.7	15.2	0.8	0.7	2.74	9.7	5.2
PH345a	12.8	2.8	9.8	7.3	2.3	14.8	0.4	0.3	2.34	9.8	6.0
	13.2	3.2	10.2	7.7	2.7	15.2	0.8	0.7	2.74	10.2	6.4

PH346

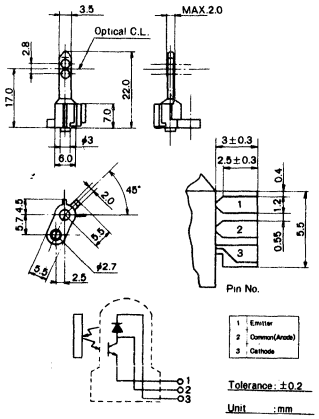

PH347

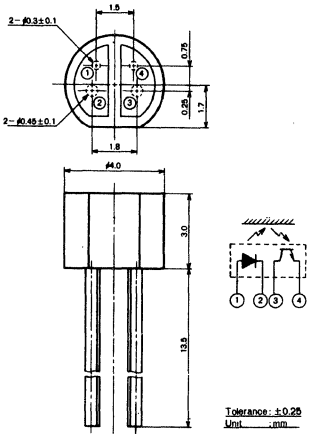

PH320

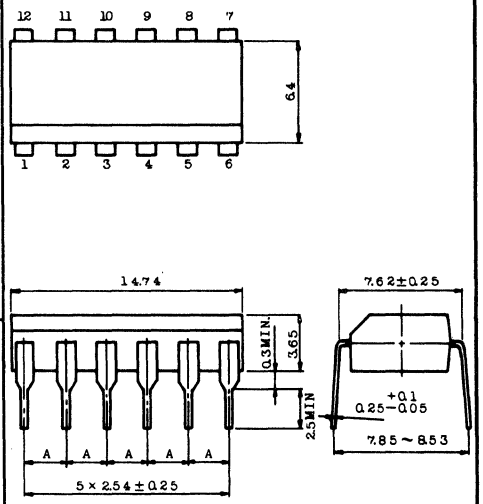

PH321

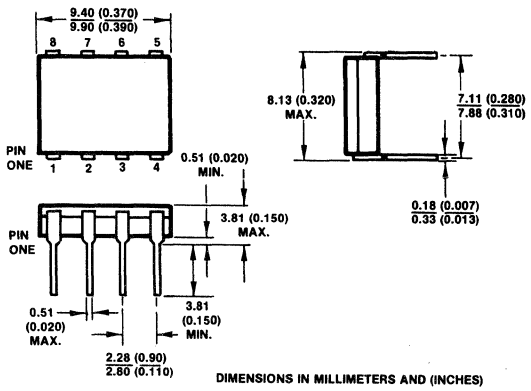

DIMENSIONS IN MILLIMETERS AND (INCHES)

49. OUTLINE DRAWINGS

PH348

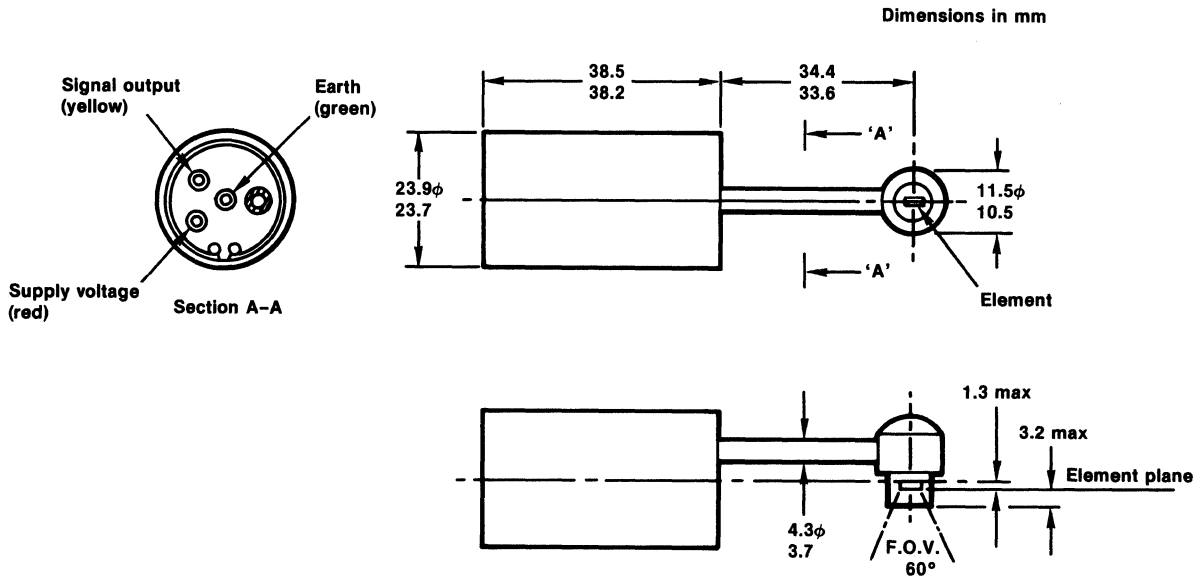

PH322

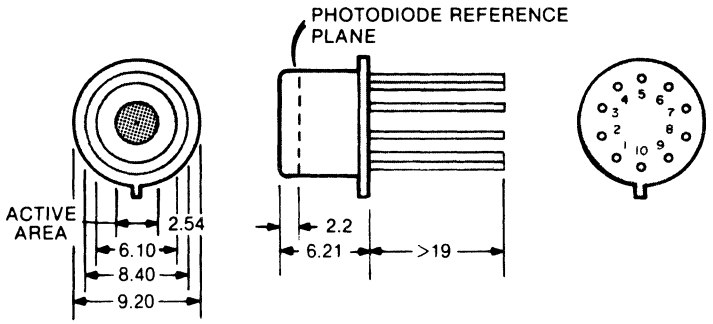

PH323

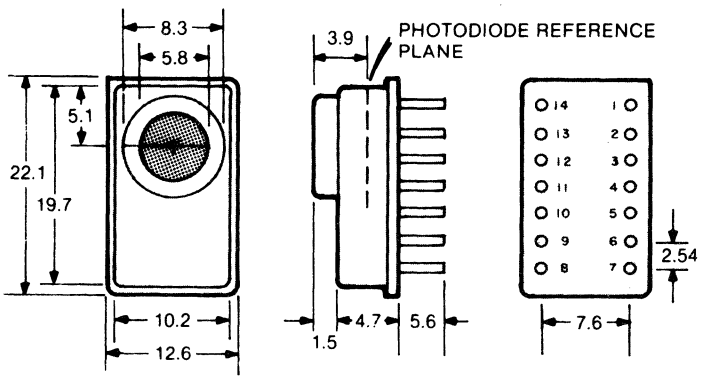

49. OUTLINE DRAWINGS

PH349

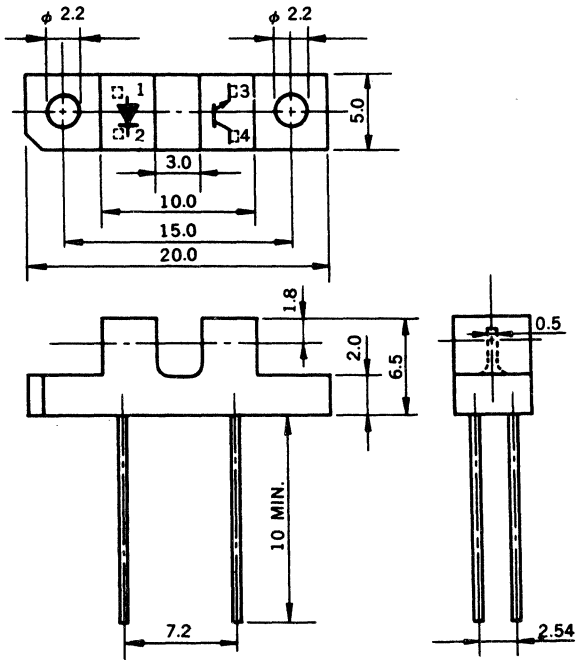

PH350

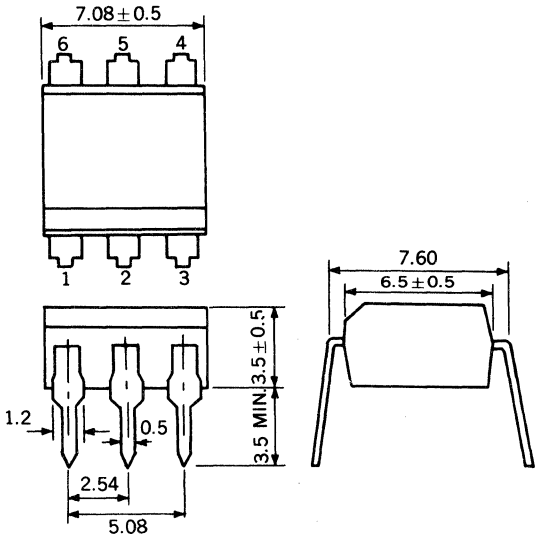

49. OUTLINE DRAWINGS

PH351

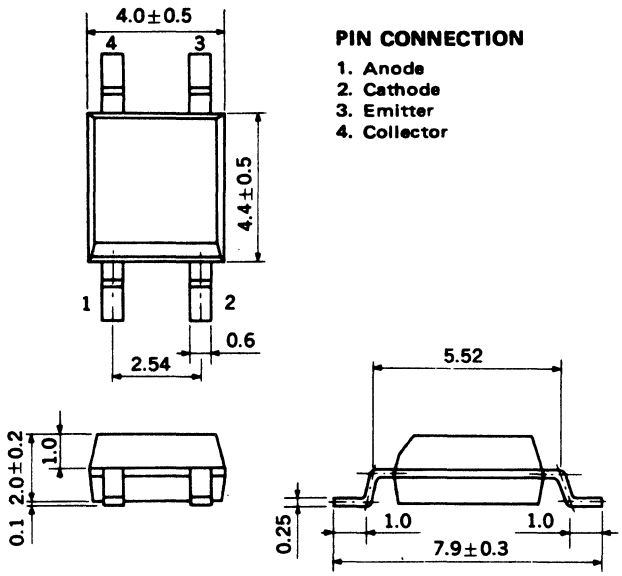

PIN CONNECTION

1. Anode
2. Cathode
3. Emitter
4. Collector

PH355

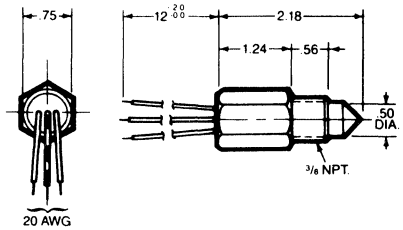

PH356

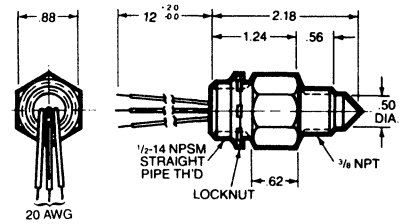

PH352

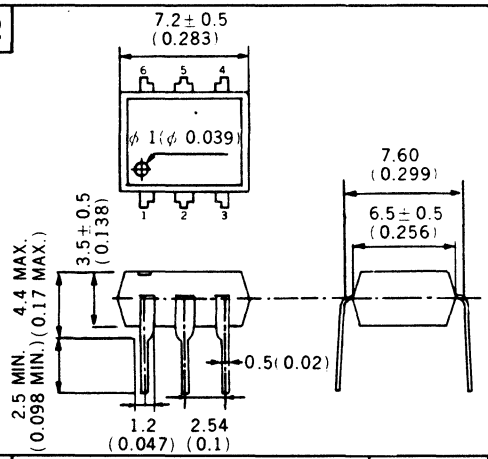

PH357

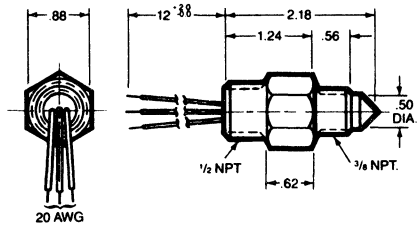

PH358

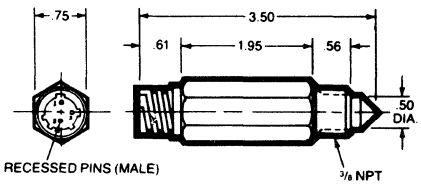

PH359

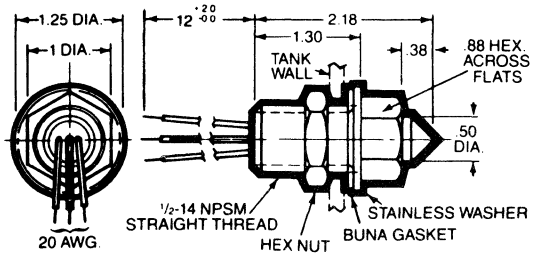

49. OUTLINE DRAWINGS

PH353

Package Dimensions in Inches (mm)

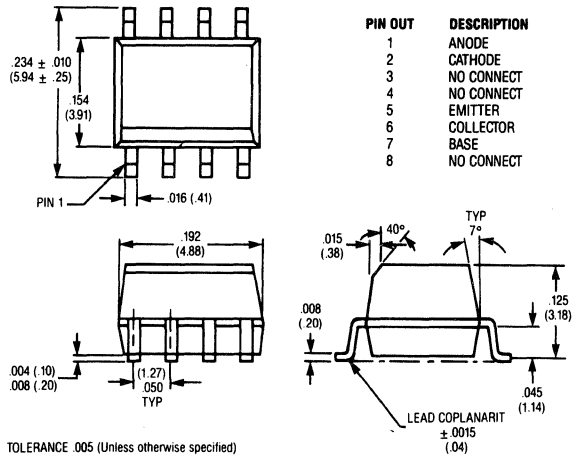

PIN OUT	DESCRIPTION
1	ANODE
2	CATHODE
3	NO CONNECT
4	NO CONNECT
5	EMITTER
6	COLLECTOR
7	BASE
8	NO CONNECT

TOLERANCE .005 (Unless otherwise specified)

PH364

All dimensions in inches (millimeters).

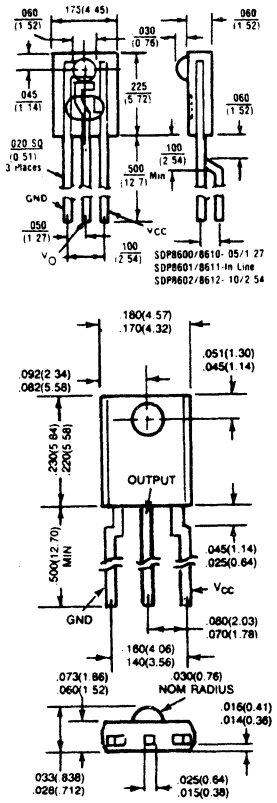

PH354

Package Dimensions in Inches (mm)

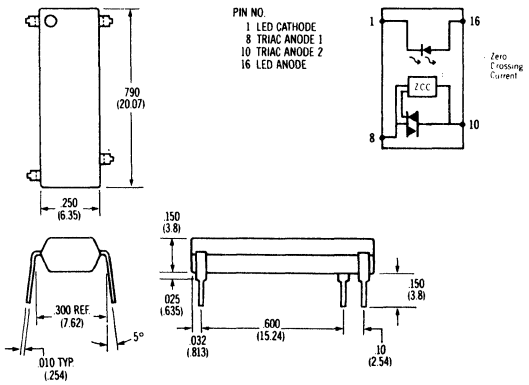

49. OUTLINE DRAWINGS

PH360

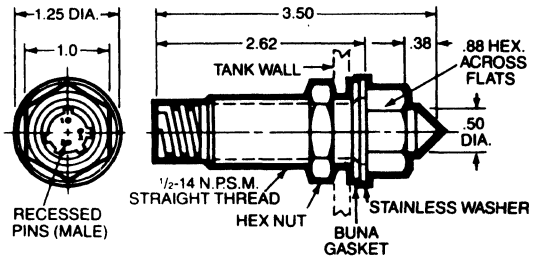

PH361

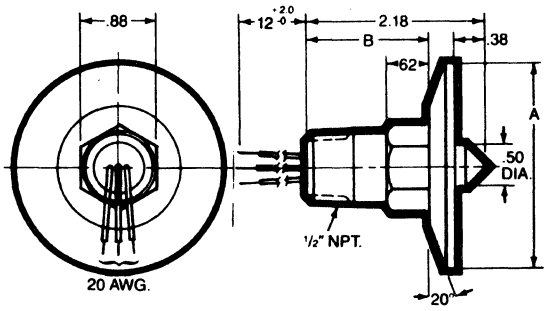

PH362

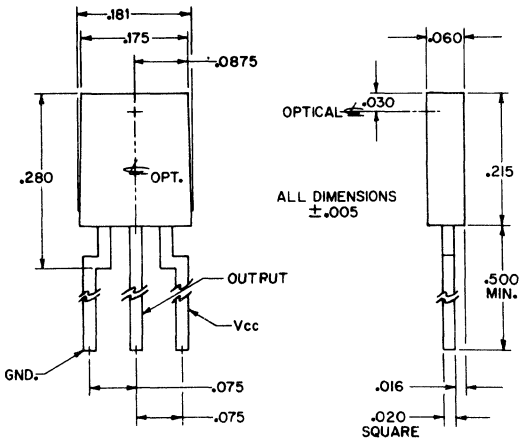

PH363

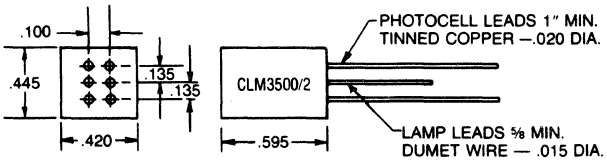

49. OUTLINE DRAWINGS

PS1

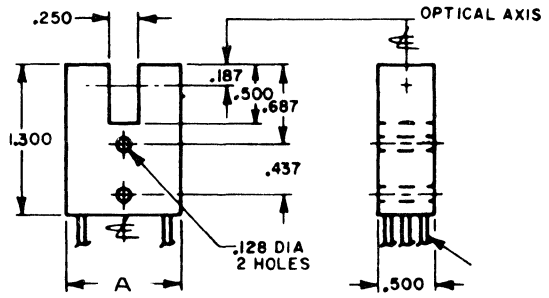

	A
PS1	1.000
PS1a	.950

PS2

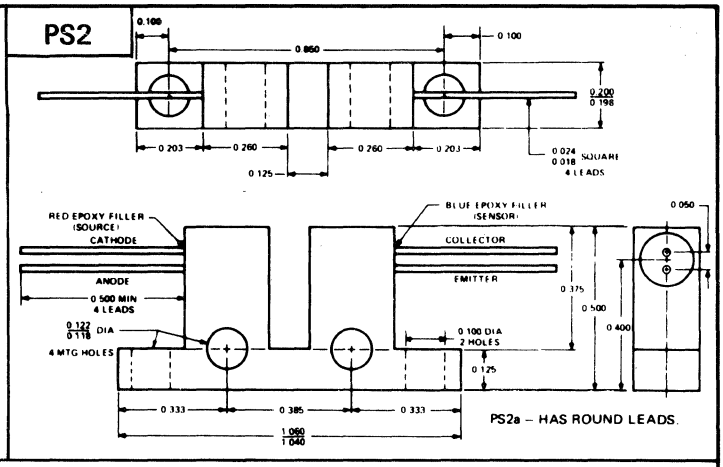

PS3

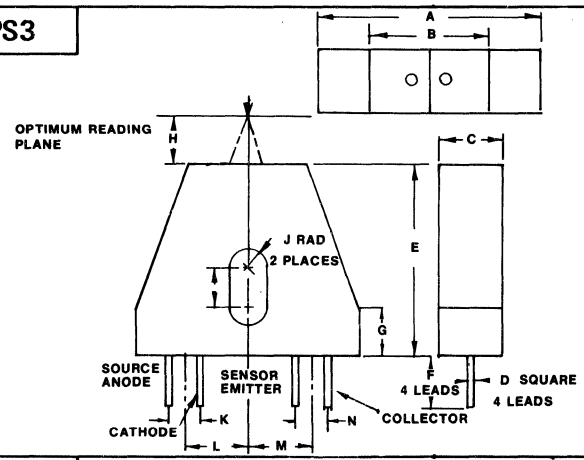

	A	B	C	D	E	F	G	H	I	J	K	L	M	N
PS3	.690 .710	.375	.200	.018 .024	.590 .610	.150 MIN	.140 .160	.100 .200	.125	.060 .064	.090 .110	.200	.200	.050 .110
PS3a	.700	.375	.200	.020	.600	.150 MIN	.150	.150	.125	.062	.100	.200	.200	.100

PS4

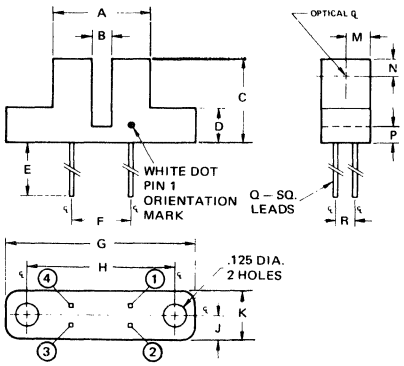

	A	B	C	D	E	F	G	H	J	K	M	N	P	Q	R
PS4	.500	.100	.425	.175	.500 MIN	.285 .315	1.000	.745 .755	.125	.250	.125	.075	.175	.017 .023	.100
PS4a	.480 .490	.120 .130	.420 .430	.095 .105	.295 .305	.215 .225	.955 .985	.745 .755	.120 NOM	.245 .255	.120 NOM	.110 NOM	.075 .085	.015 .025	.100 NOM
PS4b		.125	.500	.195	1.50	.300	1.05				.150				
PS4c	.496	.120 .139	.401	.106	.299	.216	.968	.751		.244	.120 .139				.100
PS4d		.098	.394	.138	.394	.295	.964	.748	.122	.244					.102
PS4e	.512	.118	.394	.098	.280 MIN	.280	.984	.748		.244		.094	.098	.018	.100
PS4f	.512	.118	.394	.098	.708 MIN	.300	.984	.748		.244		.094		.018	.100
PS4g	.504 .526	.110 .126	.386 .402	.110 .126	.583 .598	.386 .402	.976 .992	.740 .756		.263 .252		.091 .106		.024 TYP	.092 .108

PS5

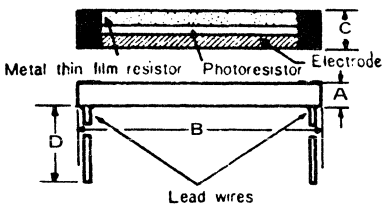

	A	B	C	D
PS5	.090	.980	.140	1.29
PS5a	.120	1.96	.390	1.29
PS5b	.120	3.92	.390	1.29

PS7

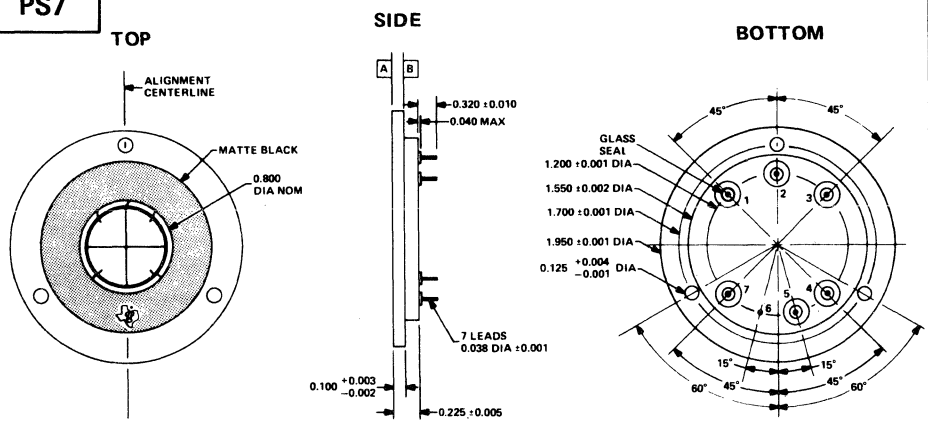

49. OUTLINE DRAWINGS

PS8

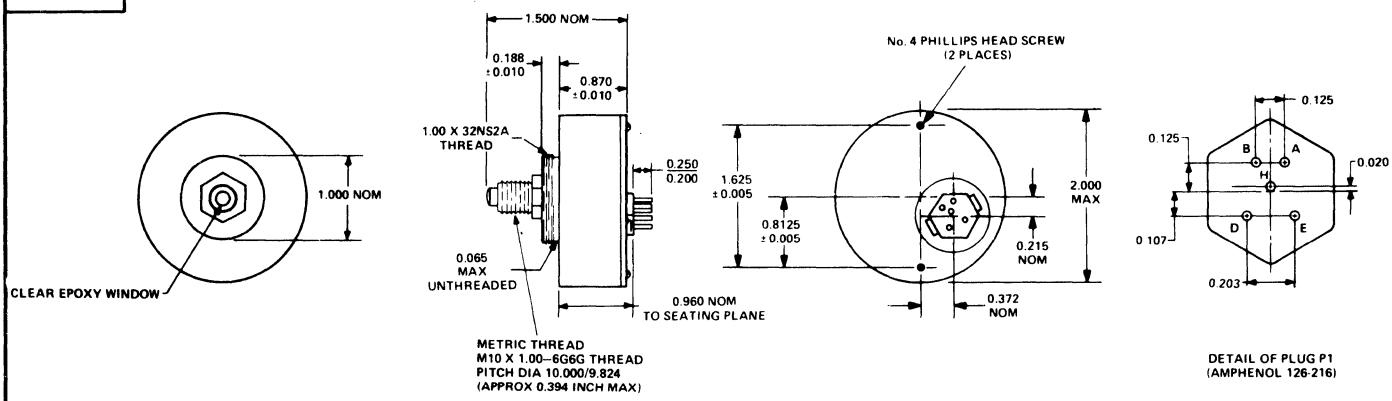

PS9

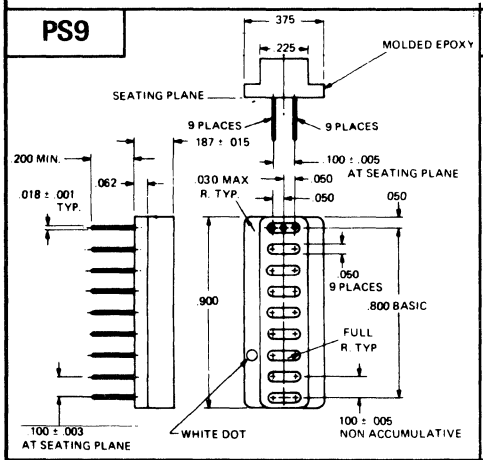

PS10

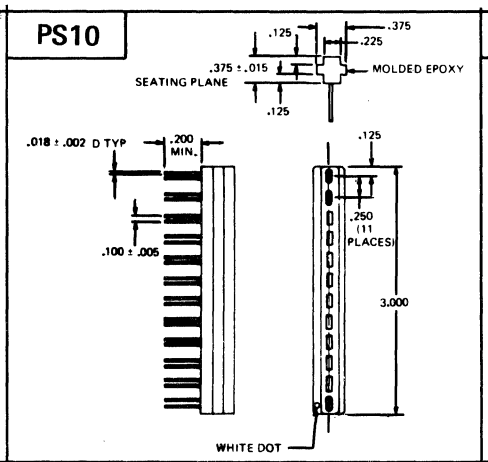

PS11

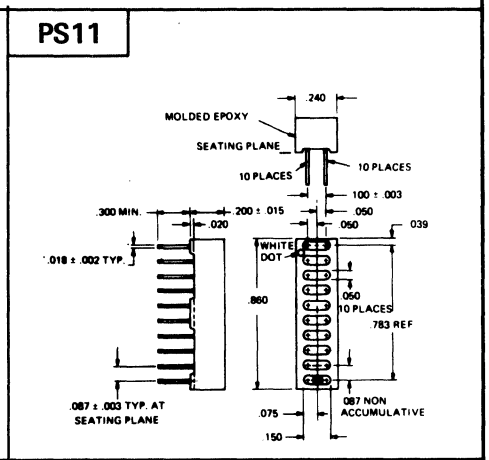

PS12

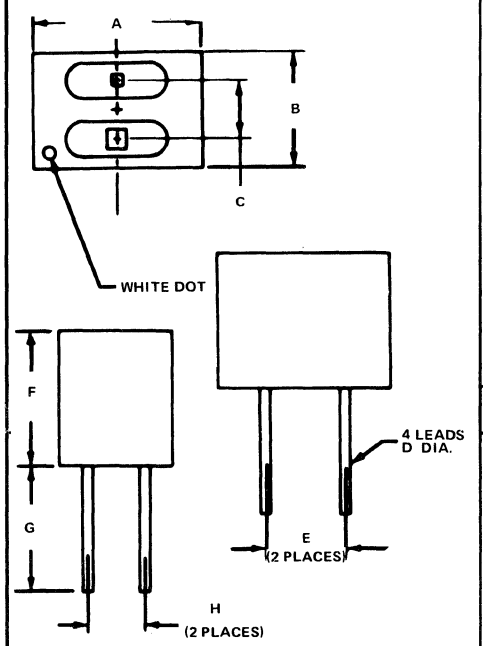

	A	B	C	D	E	F	G	H
PS12	.240	.165 / .205	.077 / .102	.018	.100	.165 / .195	.300 MIN.	.087
PS12a	.240	.195	.084 / .090	.018	.097 / .103	.180 / .195	.300 MIN.	.084 / .090

PS13

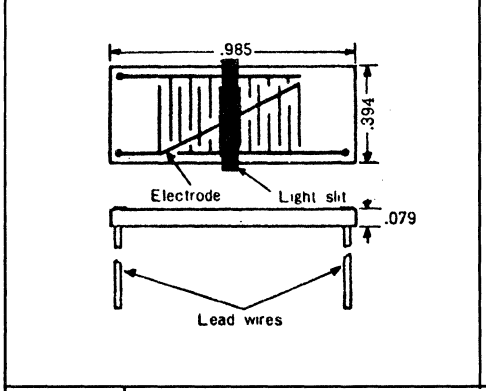

PS14

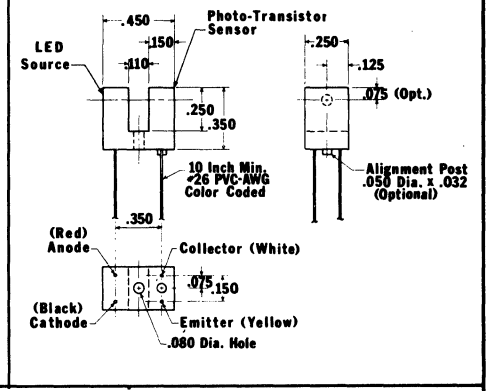

PS15

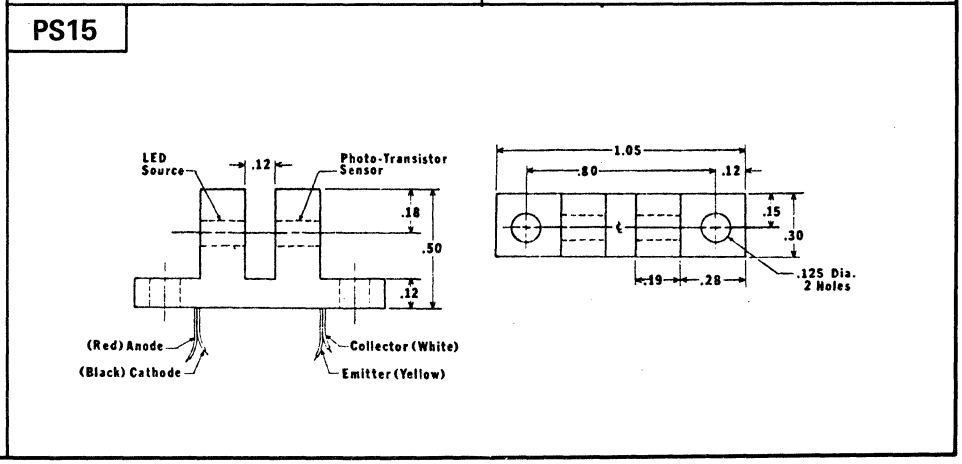

49. OUTLINE DRAWINGS

PS52

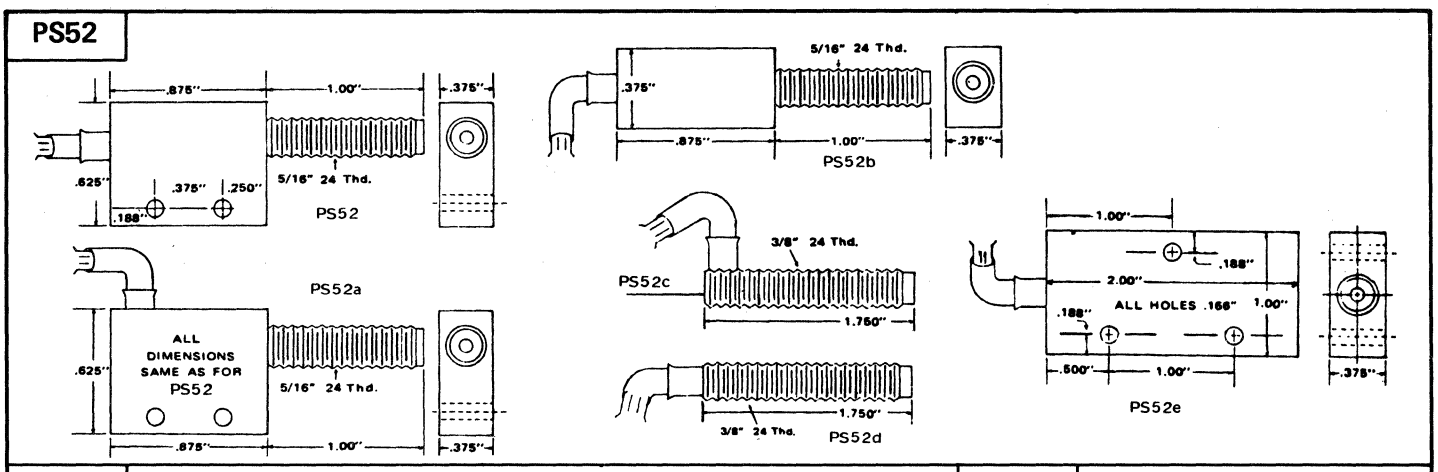

PS17

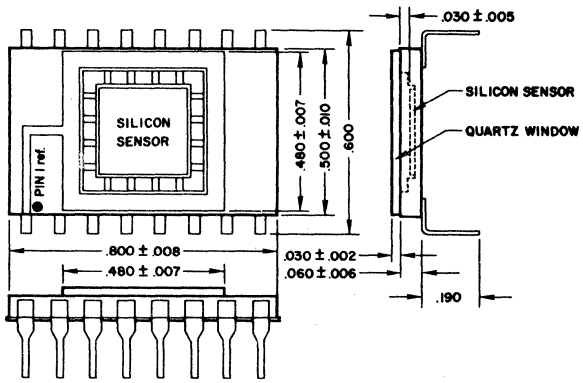

PS19

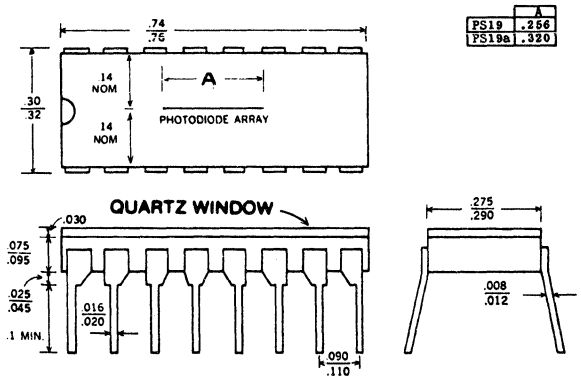

	A
PS19	.256
PS19a	.320

PS21

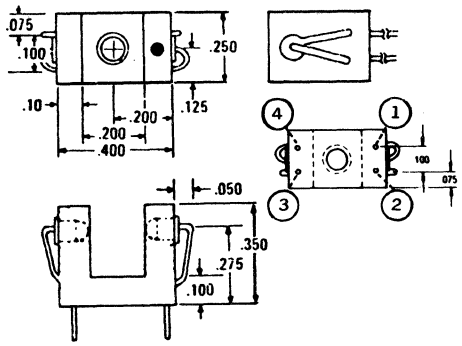

PS22

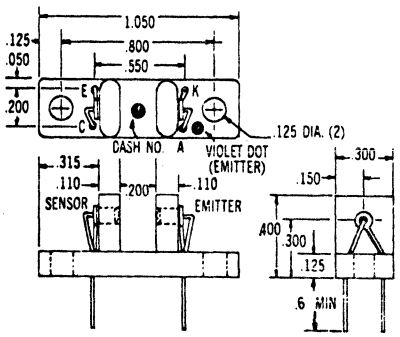

PS23

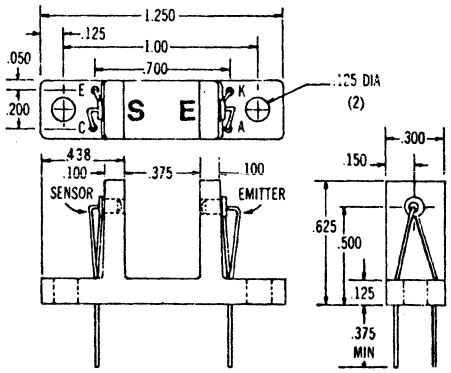

PS26

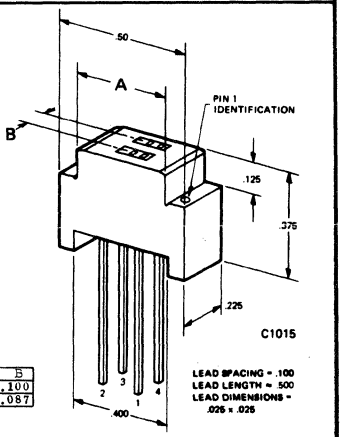

	A	B
PS26	.375	.100
PS26a	.240	.087

49. OUTLINE DRAWINGS

PS28

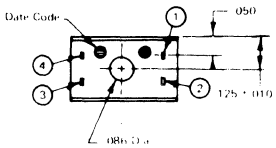

P/N SUFFIX W HAS 12" LONG
AWG NO. 28 WIRES

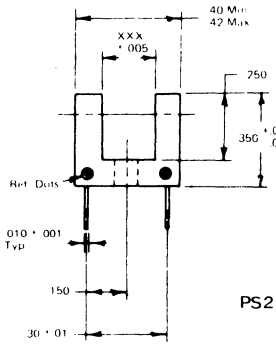

PS28

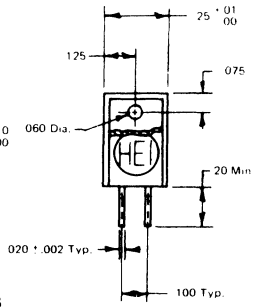

GAP DISTANCE (XXX)

P/N Suffix	Gap
060	.060 Inches
200	.200 Inches

PS29

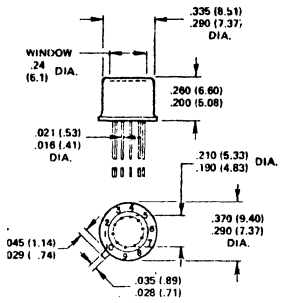

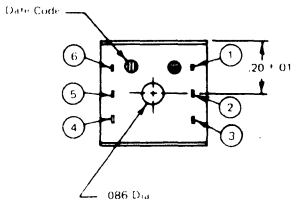

GAP DISTANCE (XXX)

P/N Suffix	Gap
060L	060 Inches
200L	200 Inches

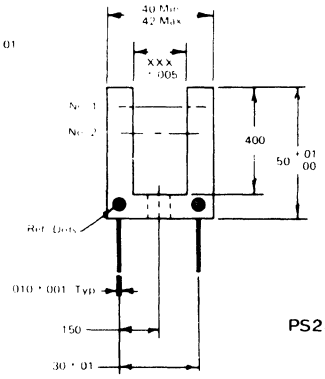

PS28a

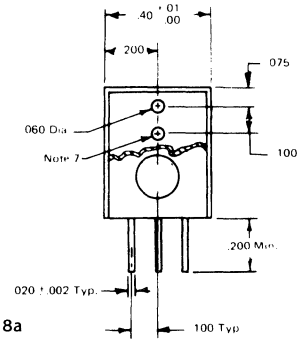

PS31

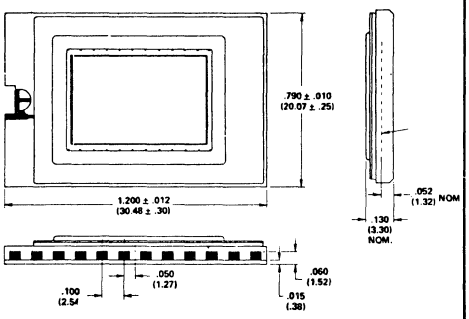

PS34

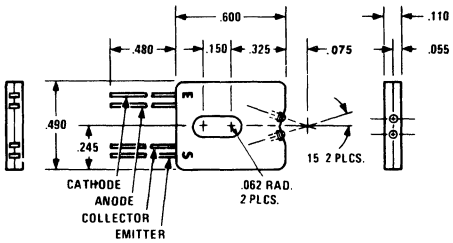

PS35

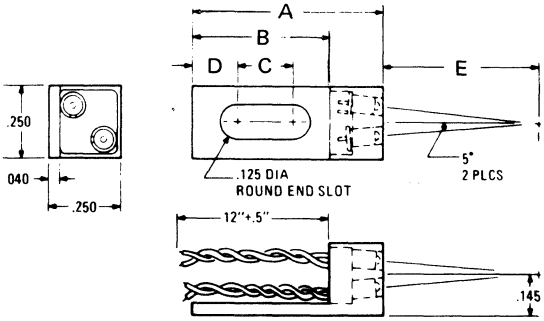

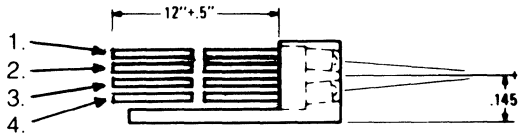

A. SENSOR FOR PS35; COLLECTOR, BROWN; EMITTER, BLACK
B. SENSOR FOR PS35a; COLLECTOR, ORANGE; EMITTER, BLACK
C. SENSOR FOR PS35b; COLLECTOR, YELLOW; EMITTER, BLACK
D. LED: BLACK=(NEG.); RED=(POS.).

PS35e ONLY

1. LED CATHODE
2. LED ANODE
3. SENSOR COLLECTOR
4. SENSOR EMITTER

	A	B	C	D	E
PS35, a-c,e	.625	.450	.187	.150	.500
PS35d	.750	.570	.330	.120	.500

49. OUTLINE DRAWINGS

PS37

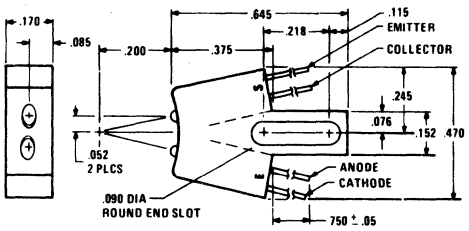

PS47

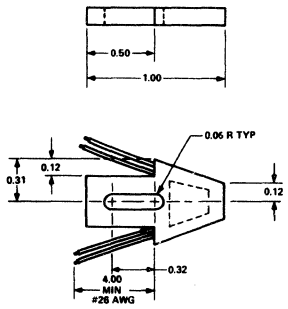

PS40

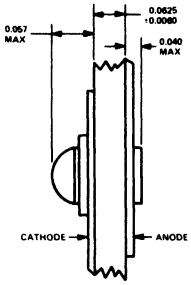

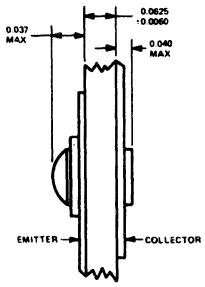

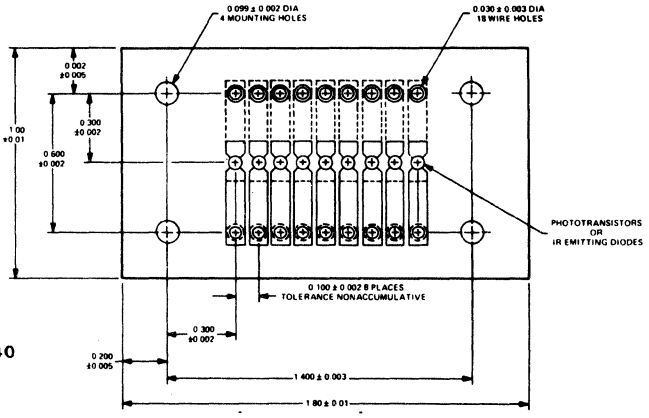

PS40

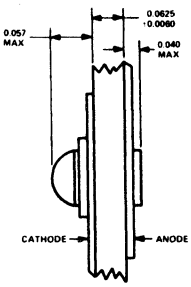

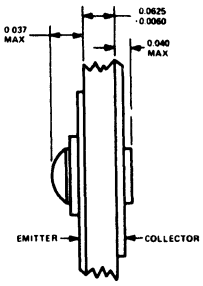

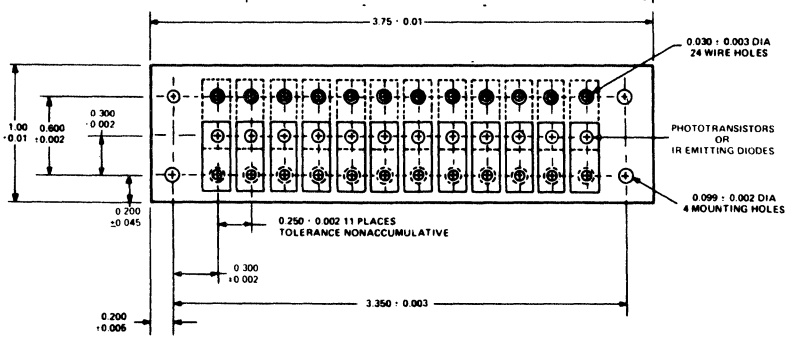

PS40a

PS44

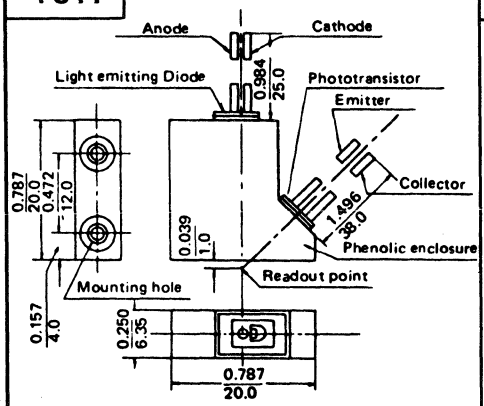

PS48

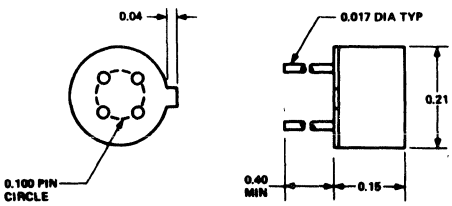

49. OUTLINE DRAWINGS

PS56

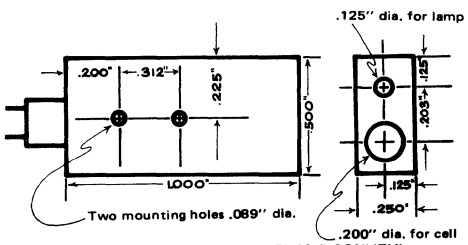

PS56a — HAS COLLIMATING LENS (PLANO CONVEX).

PS57

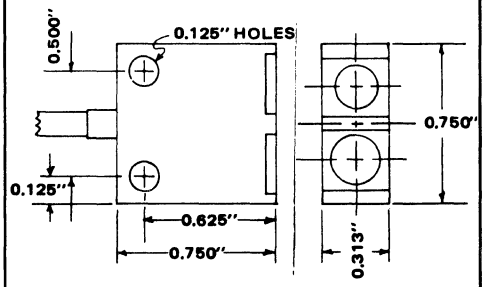

PS65

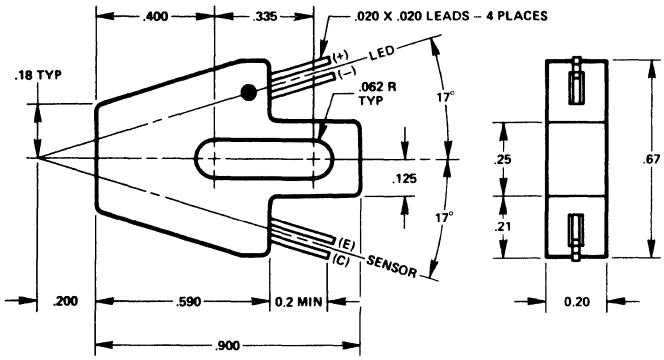

White Dot Indicates LED

PS68

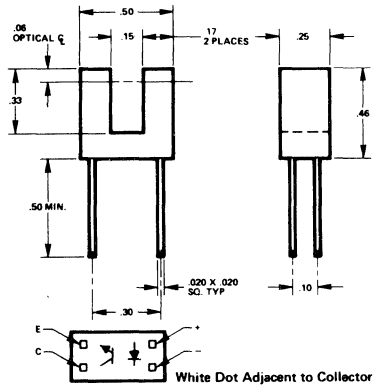

White Dot Adjacent to Collector Lead

PS74

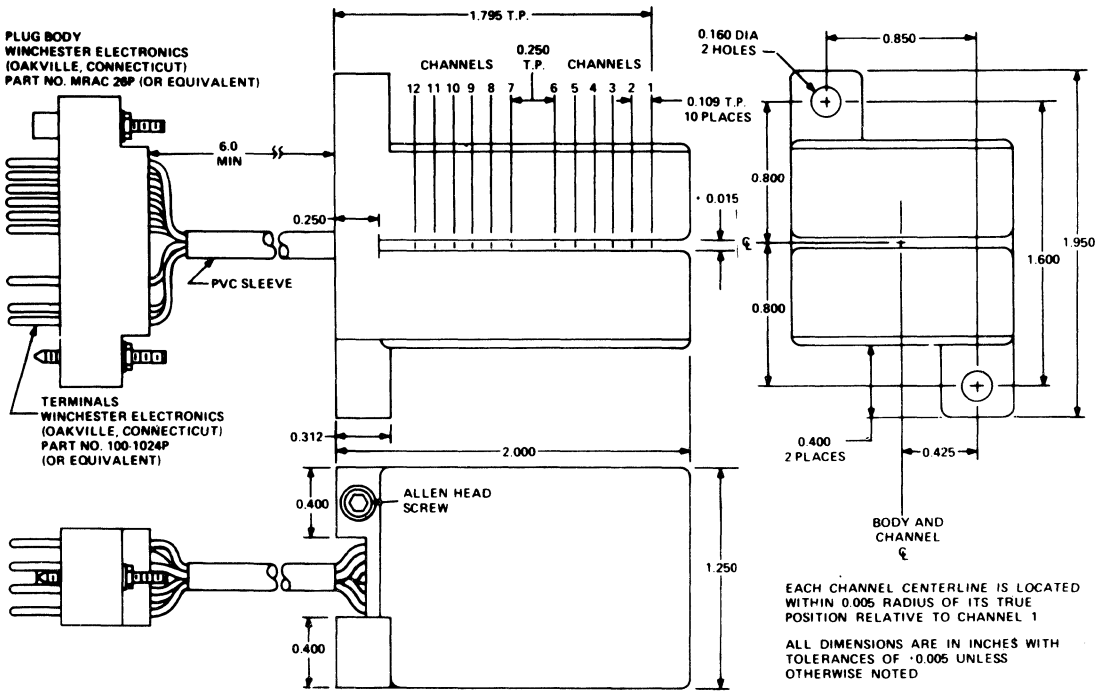

EACH CHANNEL CENTERLINE IS LOCATED WITHIN 0.005 RADIUS OF ITS TRUE POSITION RELATIVE TO CHANNEL 1

ALL DIMENSIONS ARE IN INCHES WITH TOLERANCES OF ±0.005 UNLESS OTHERWISE NOTED

49. OUTLINE DRAWINGS

PS133

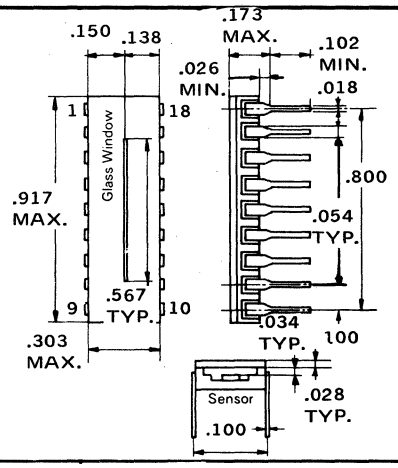

PS82

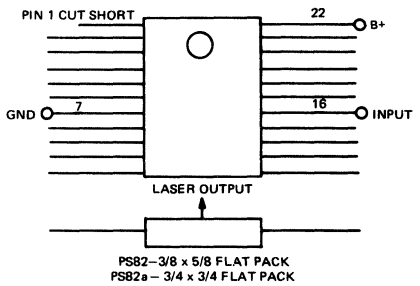

PS85

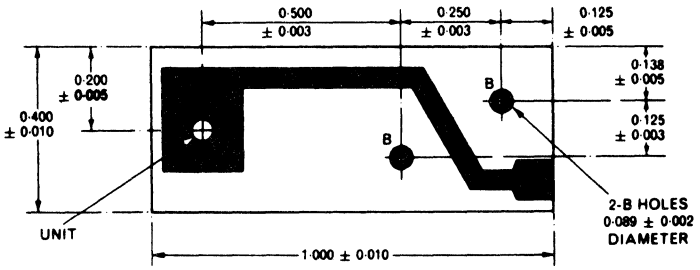

1/16" fibre-glass board

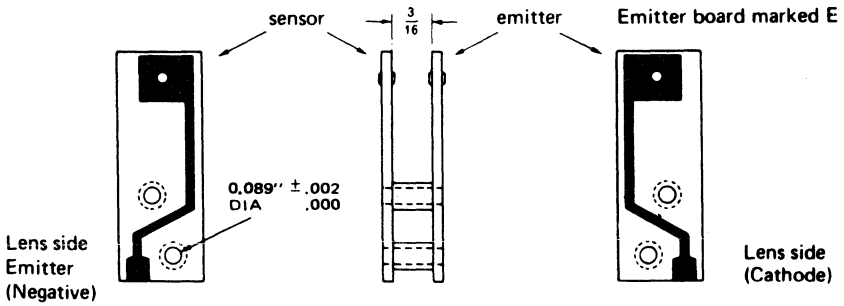

49. OUTLINE DRAWINGS

PS93

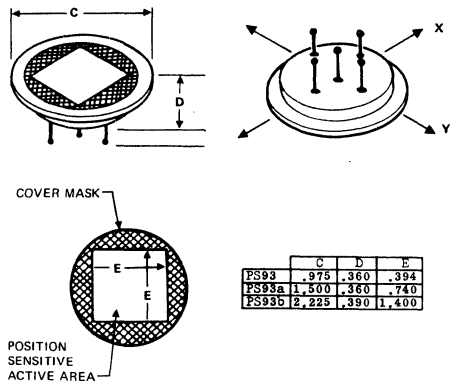

	C	D	E
PS93	.975	.360	.394
PS93a	1.500	.360	.740
PS93b	2.225	.390	1.400

PS94

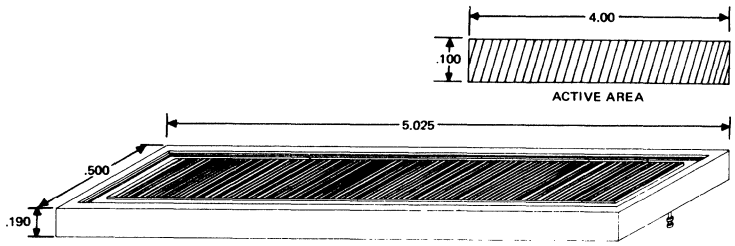

PS95

PS96

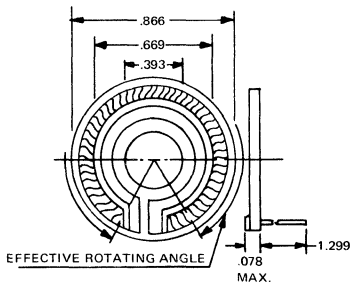

PS99

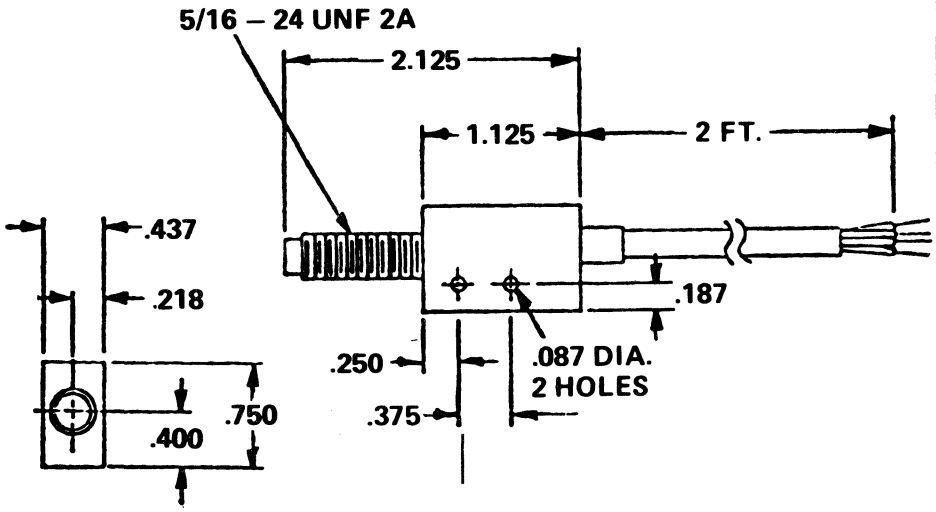

49. OUTLINE DRAWINGS

PS104

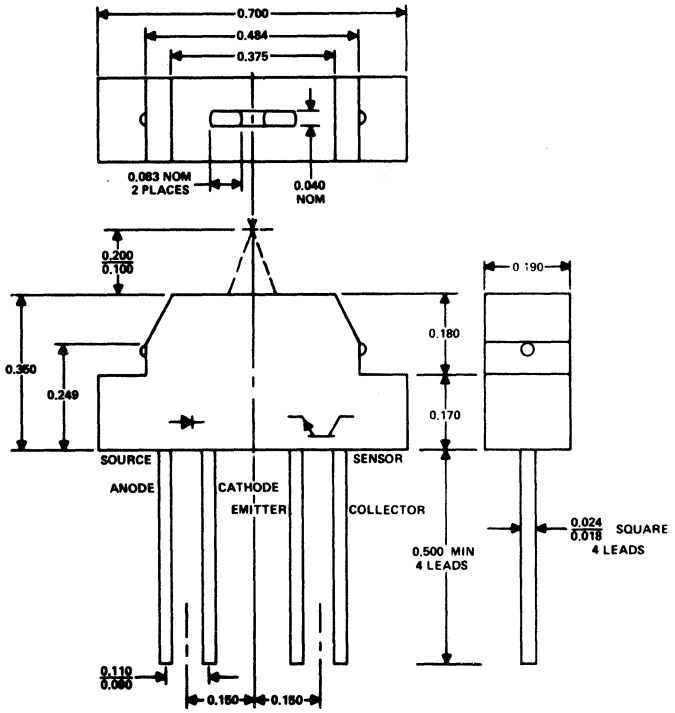

PS105

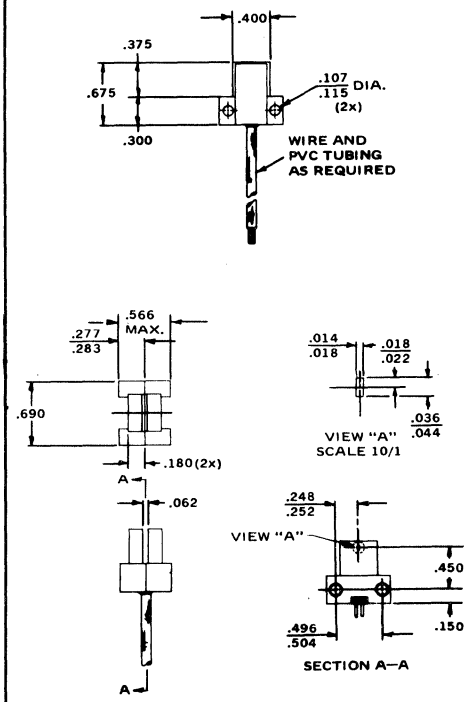

PS106

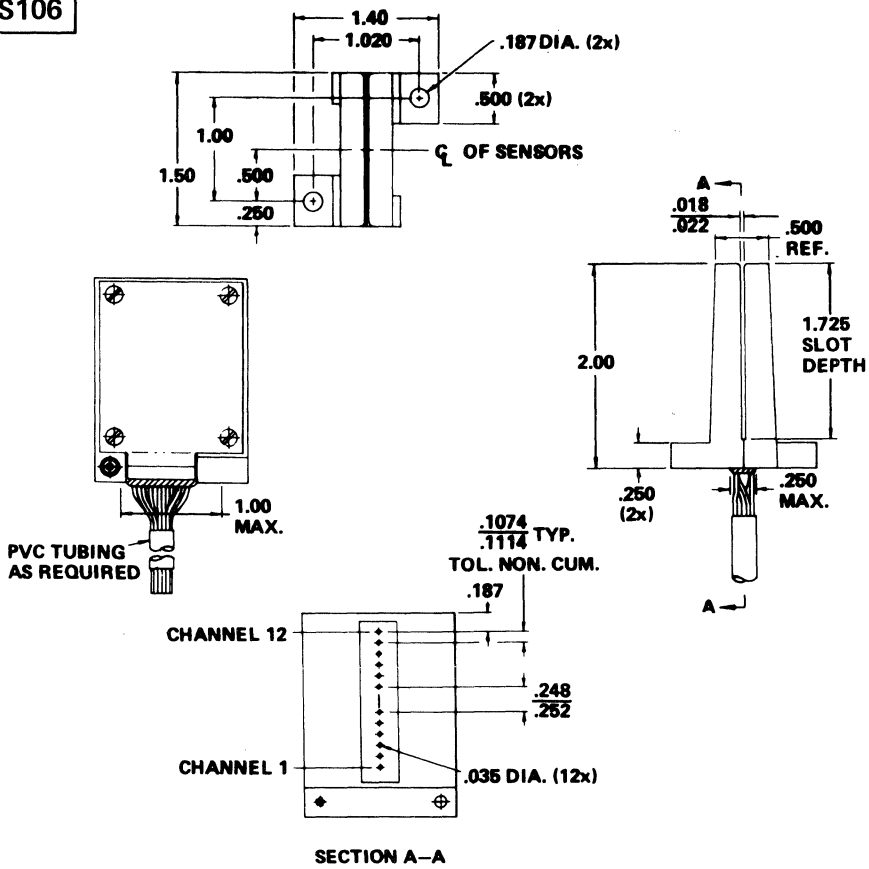

49. OUTLINE DRAWINGS

PS108

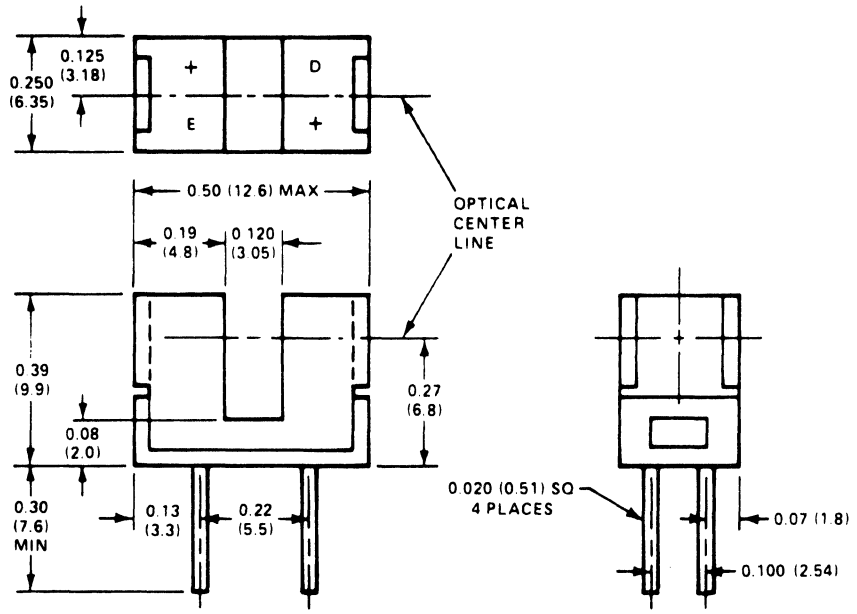

DIMENSIONS ARE IN INCHES (MILLIMETERS)
X.XXX = ± 0.010 (0.25)

PS110

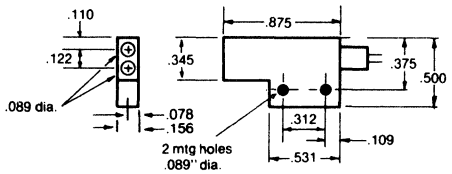

PS111

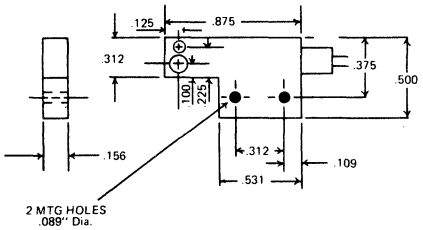

PS112

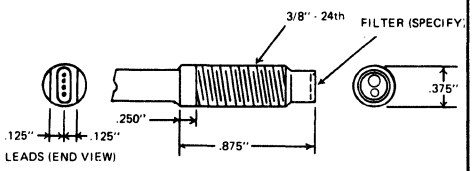

PS113

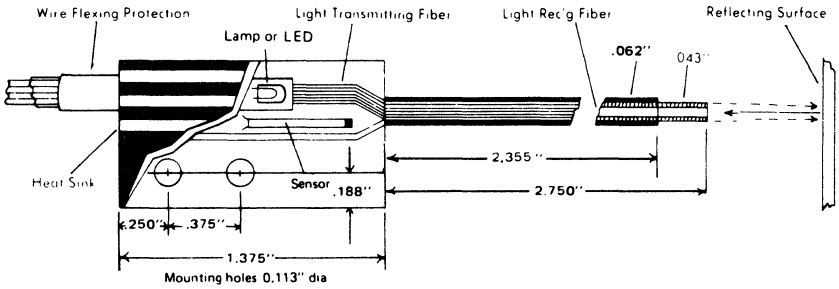

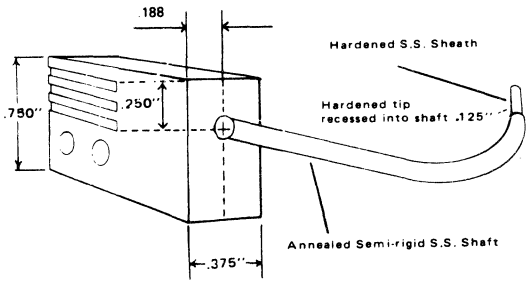

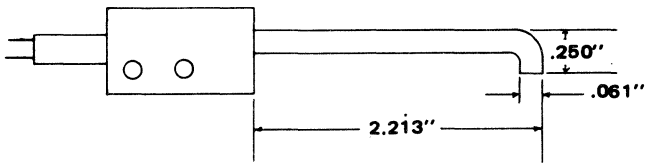

PS114

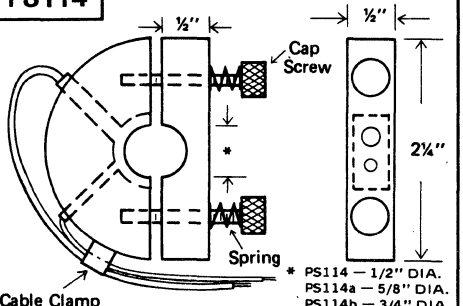

* PS114 — 1/2" DIA.
PS114a — 5/8" DIA.
PS114b — 3/4" DIA.
PS114c — 1" DIA.
PS114d — 1/2" DIA.
PS114e — 3/8" DIA.

Color Coding:
Lamp -white and blue - no polarity
Sensor -red (+) black (−) twisted pair w/alumimum/kapton shield.

49. OUTLINE DRAWINGS

PS115

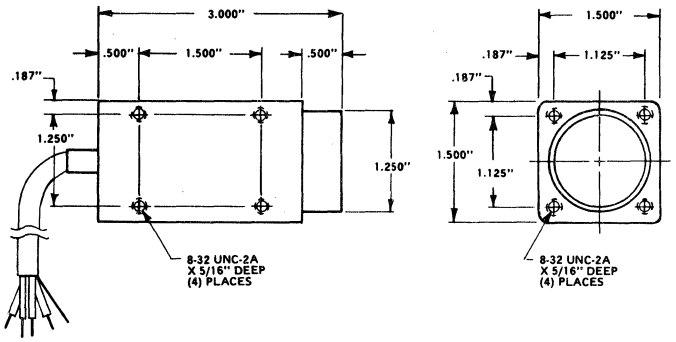

PS116

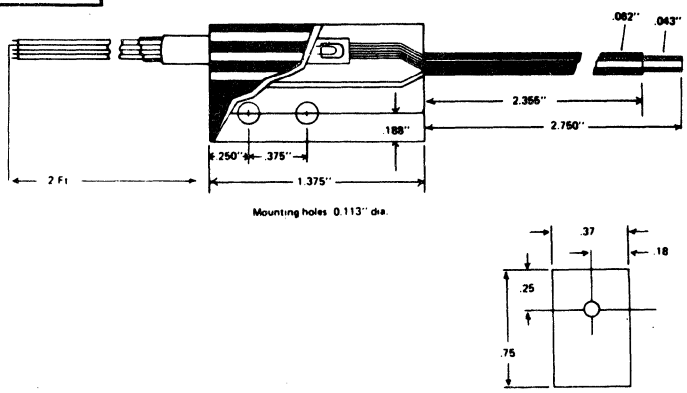

PS117

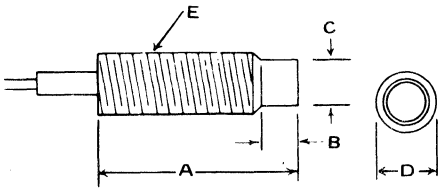

	A	B	C	D	E (THD)
PS117	1.00	.100	.275	.375	3/8-24NF
PS117a	1.00	.120	.180		5/16-24
PS117b	.750	.250	.185	.250	1/4-28
PS117c	.750	.370	.120	.170	8-32UNC

PS120

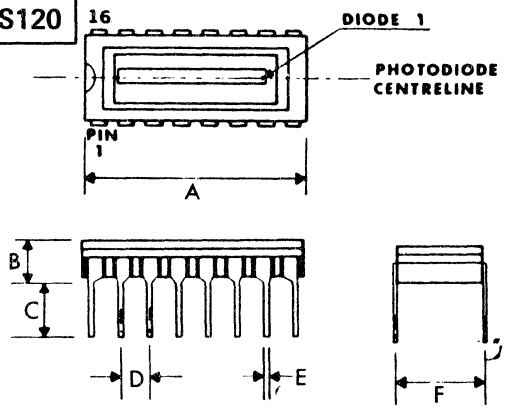

	A	B	C	D	E	F
PS120	.750	.153	.170	.100	.019	.300
PS120a	.750	.140	.240	.100	.018	.300
PS120b	.748	.100	.190	.100		.300

PS121

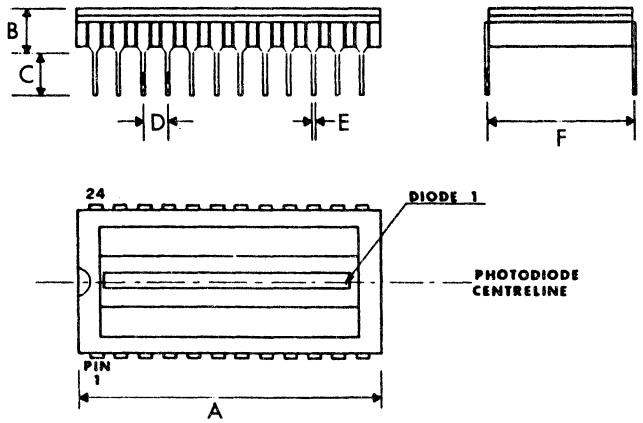

	A	B	C	D	E	F
PS121	1.250	.193	.130	.100	.019	.600
PS121a	1.250	.150	.170	.100	.018	.600
PS121b	1.690	.110	.190	.100	.018	.610
PS121c	1.188 1.212	.093 .117	.120 .150	.100 NOM	.015 .019	.602 .622
PS121d	1.346 1.374	.093 .117	.120 .150	.100 NOM	.015 .019	.602 .622
PS121e	1.762 1.798	.093 .117	.120 .150	.100 NOM	.015 .019	.602 .622

PS123

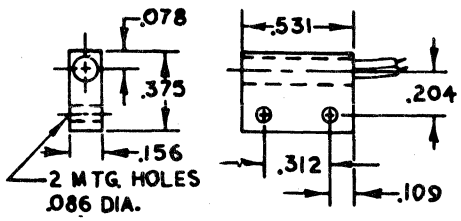

PS124

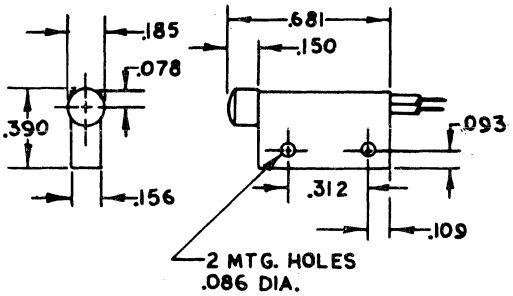

49. OUTLINE DRAWINGS

PS132

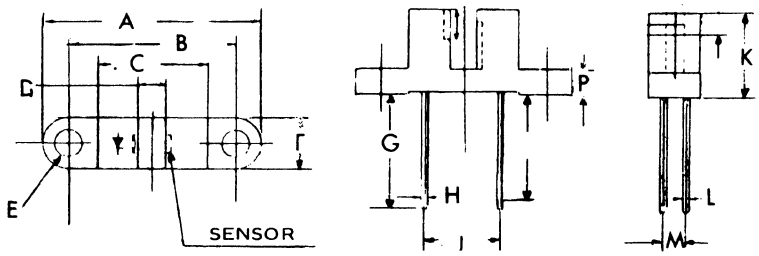

	A	B	C	D	E	F	G	H	J	K	L	M	P
PS132	.984	.748 .755	.496	.114 .125	.118 .133	.236	.492	.017	.342	.393	.017	.100	.118
PS132a	.970	.750	.480	.125		.250			.210	.395		.100	.100
PS132b	.968 .999	.720 .775	.507 .539	.106 .129	.106 .125	.232 .255	.275 MIN	.015	.248 .295	.381 .405	.015	.088 .111	.086 .110
PS132c	.969	.750	.485	.125	.125	.250	.300	.020	.220	.395	.020	.100	.100
PS132d	.965 .975	.745 .755		.125	.125 TYP	.245 .255	.500 MIN	.020	.300	.390 .400	.020	.100	.100
PS132e	.964	.748	.492	.100	.126	.244	.394 MIN	.018	.228	.394	.018	.102	.138
PS132f	1.102		.669	.197	.126	.276	.157 .MIN	.018	.472	.512	.018	.100	.118
PS132g		.740 .756			.118 .134	.236 .252	.236 MIN	.009 .026	.394				.071 .087
PS132h	1.000	.750	.300 MIN	.100	.125	.250		.020	.300 MIN	.435		.100	.165
PS132i	.984	.748	.496	.118	.126	.236	.531	.018	.343	.394		.100	.118

PS137

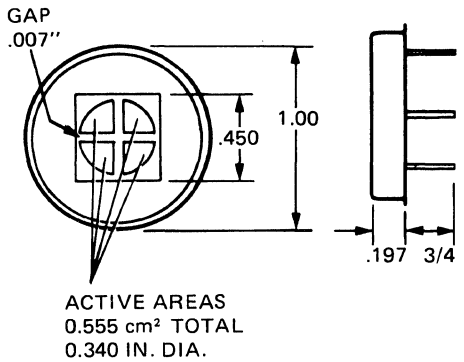

PS138

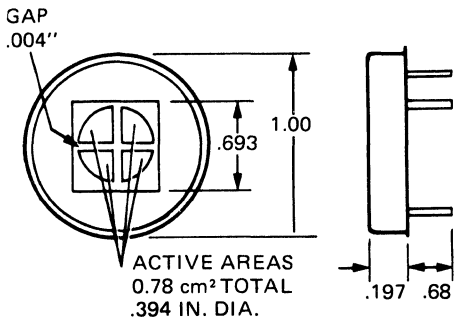

PS139

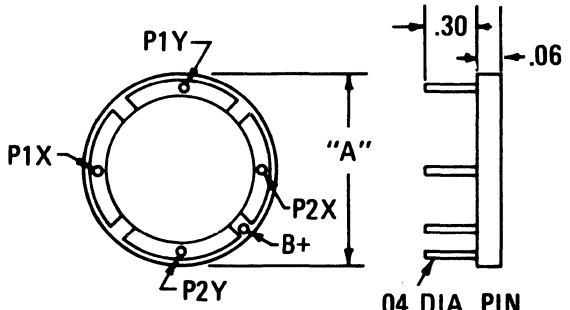

	A	B
PS139	.865	.750
PS139a	1.000	.890
PS139b	1.250	1.130

PS140

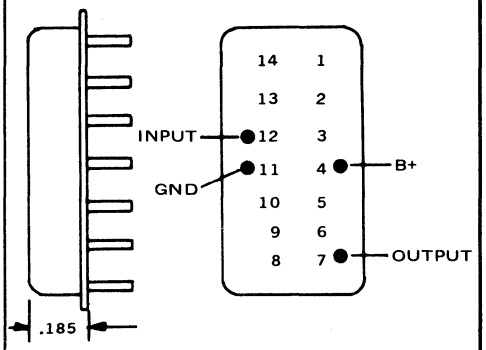

PS141

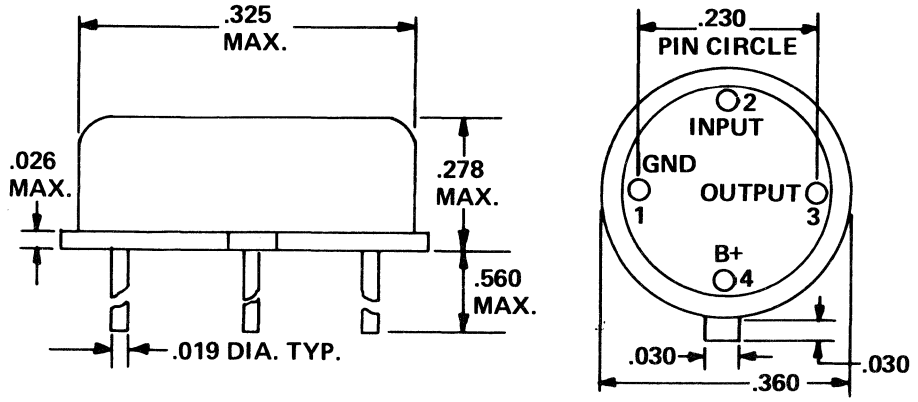

49. OUTLINE DRAWINGS

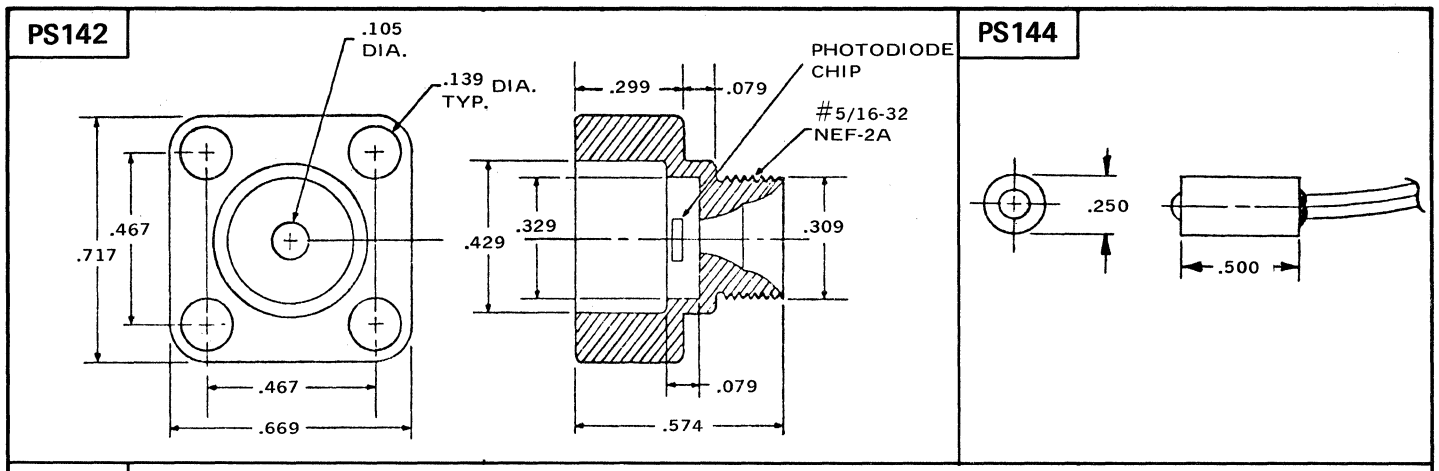

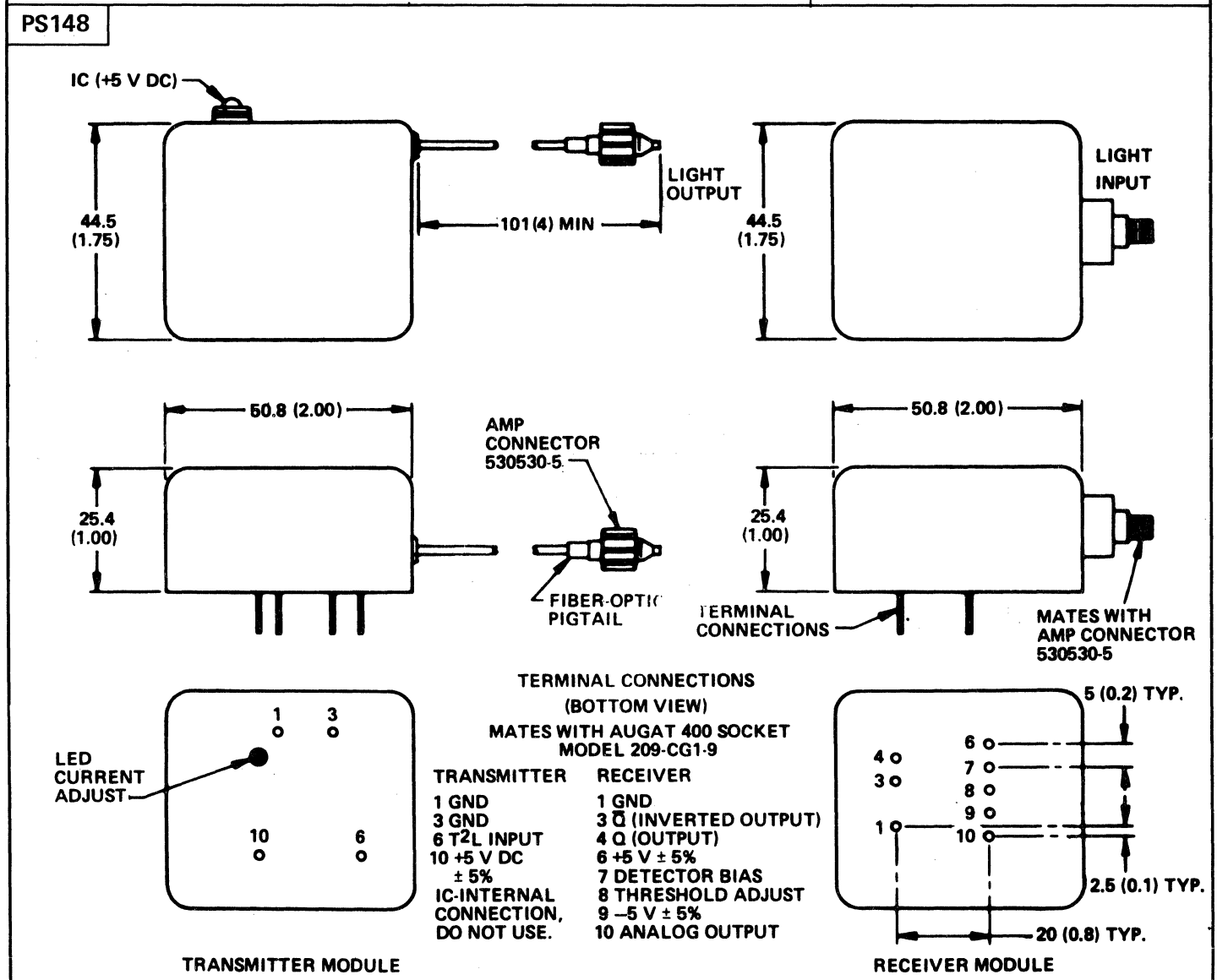

Dimensions in millimeters. Dimensions in parentheses are in inches.

49. OUTLINE DRAWINGS

PS149

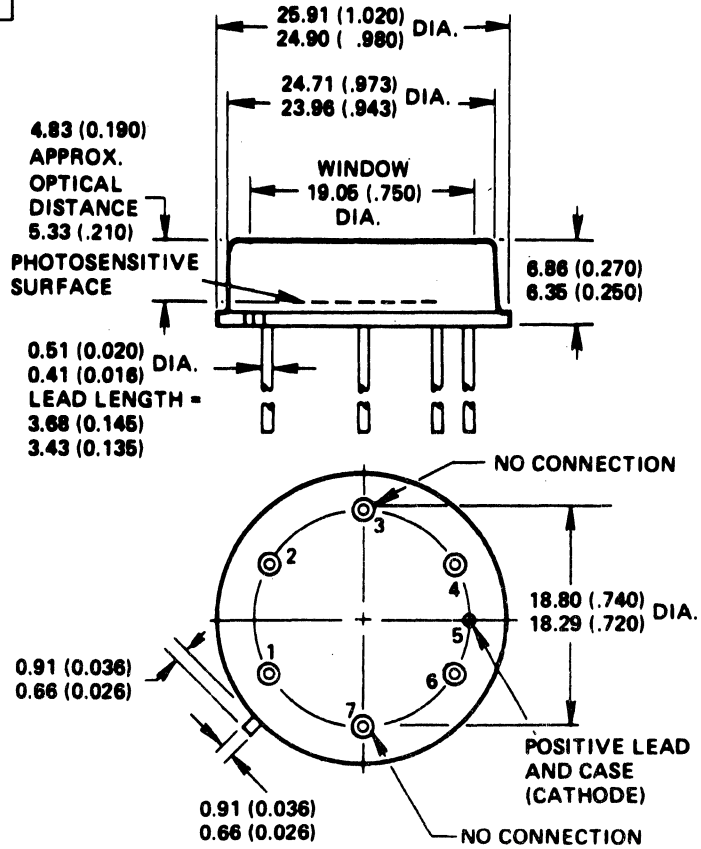

PS176

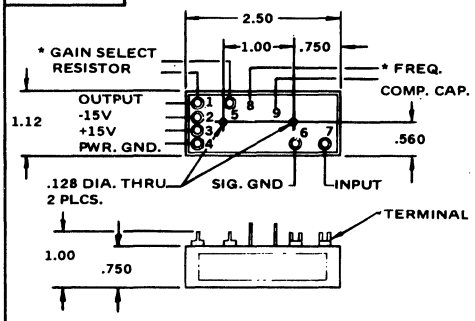

* GAIN
THE GAIN IS SELECTED BY THE RESISTANCE PLACED BETWEEN PIN 1 AND 5. MAXIMUM RECOMMENDED GAIN IS 1000.

PS151

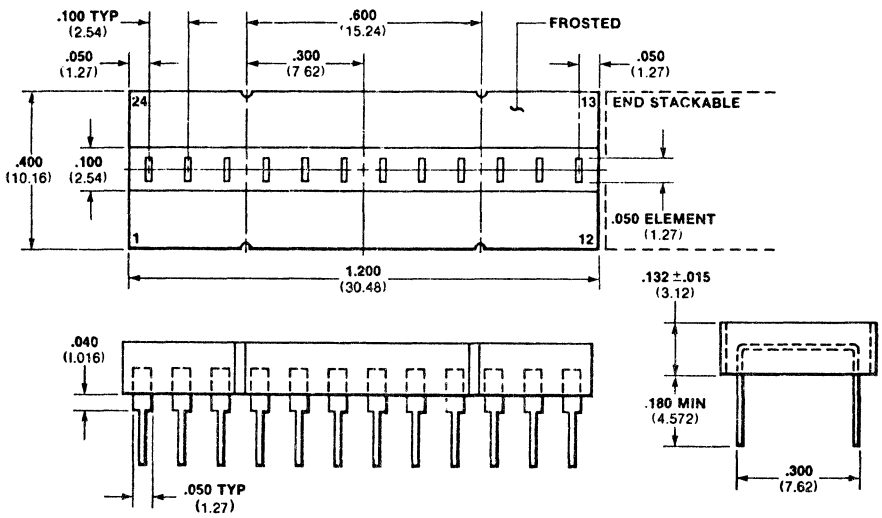

NOTE:
All dimensions in inches (bold) and millimeters (parentheses)
Tolerance ±.015

PS152

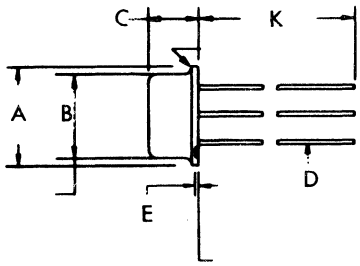

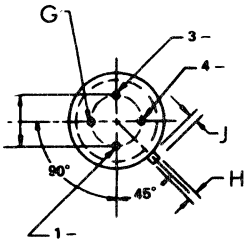

	A	B	C	D	E	G	H	J	K
PS152	.335 .370	.305 .335	.165 .185	.016 .019	.009 .125	.200	.028 .034	.029 .045	.5 MIN
PS152a	.209 .212	.183 .185	.135 .142	.016 .019		.100 BSC	.036 .046	.033 .048	.500
PS152b	.209 .230	.183 .185	.123 .129	.016 .019		.100 BSC	.039 .046	.033 .048	.500 MIN

49. OUTLINE DRAWINGS

PS153

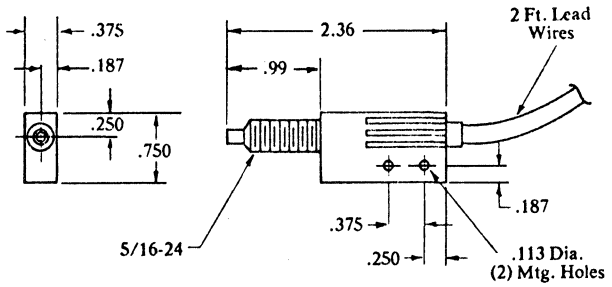

PS178

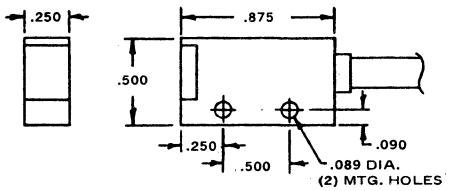

COLOR CODING: LED - BLUE (+), WHITE (—)
SENSOR — RED (+), BLACK (—)

PS154

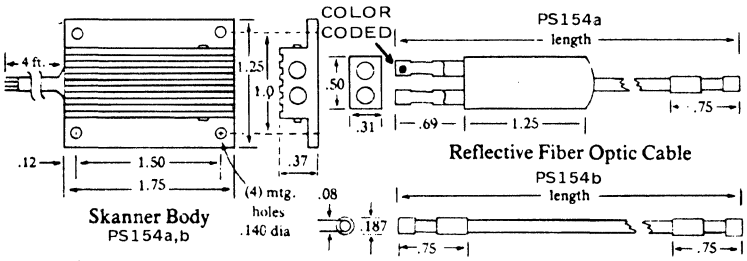

Caution: Fiber optic cables have a 1" bending radius but should NOT be twisted about their longitudinal axes.

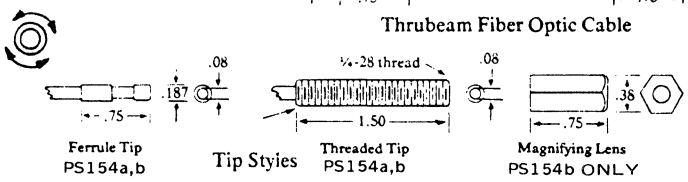

PS161

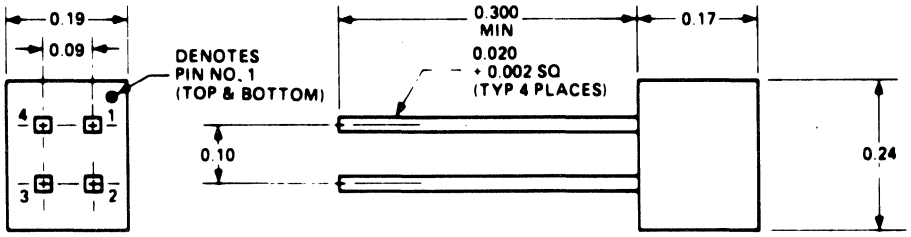

PS163 PS163a

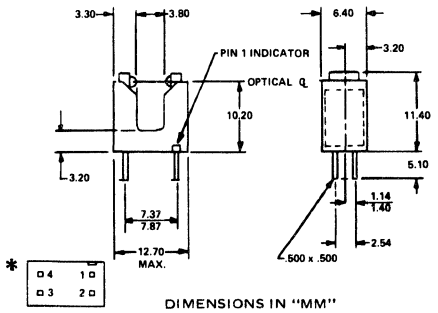

DIMENSIONS IN "MM"

*Note: For PS163a, reverse position of pins 3 and 4.

PS164

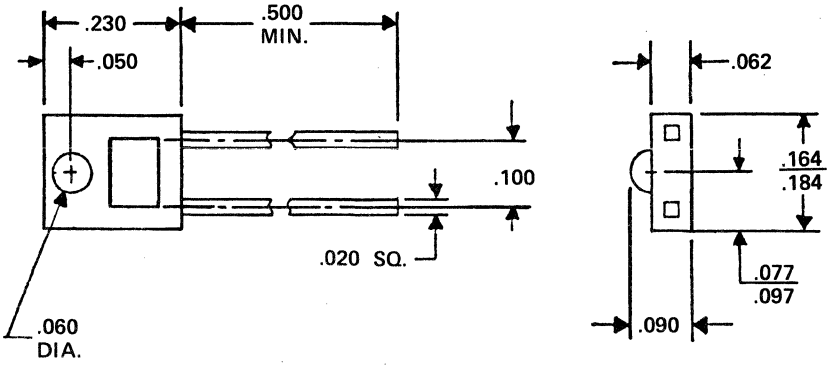

49. OUTLINE DRAWINGS

PS183

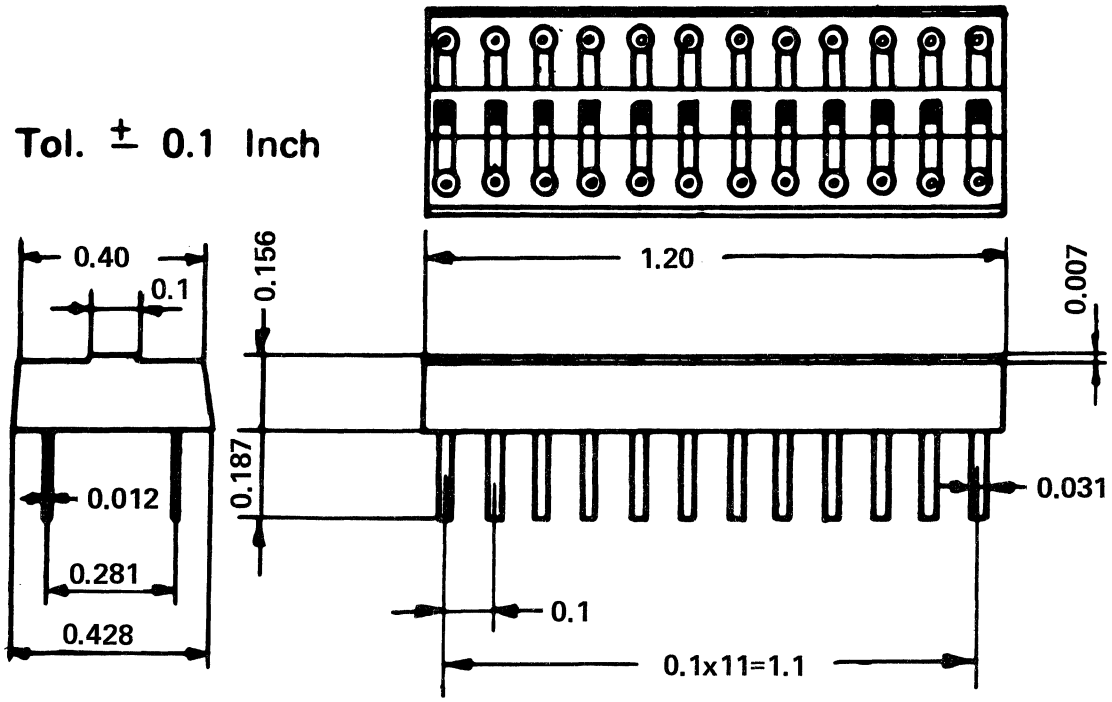

PS184

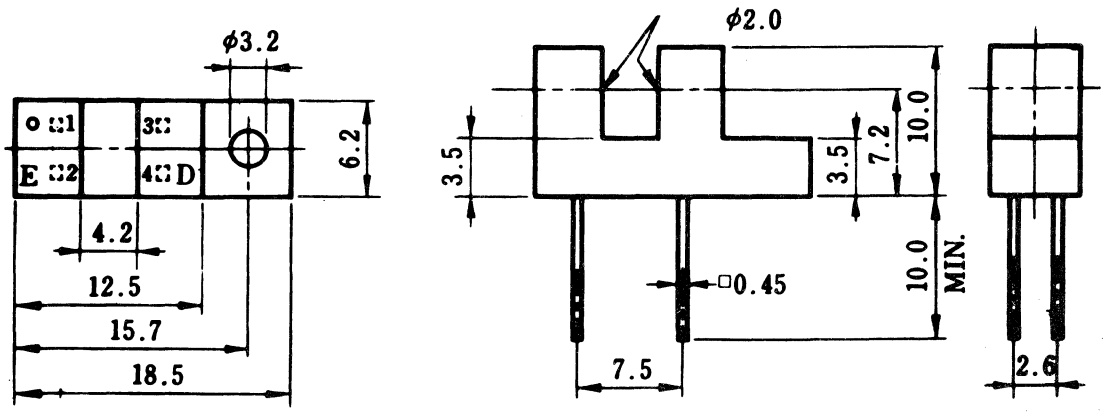

49. OUTLINE DRAWINGS

PS192

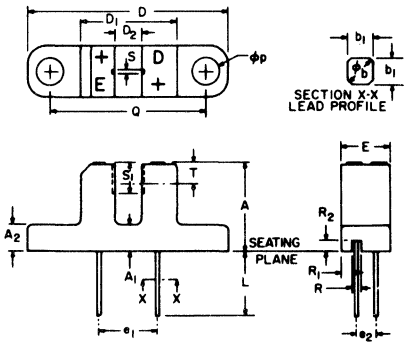

NOTES:
1. INCH DIMENSIONS ARE DERIVEQ FROM MILLIMETERS.
2. FOUR LEADS. LEAD CROSS SECTION IS CONTROLLED BETWEEN 1.27 MM (.050") FROM SEATING PLANE AND THE END OF THE LEADS.
3. THE SENSING AREA IS DEFINED BY THE "S" DIMENSION AND BY DIMENSION "T" ±0.75 MM (±.030 INCH).

SYMBOL	MILLIMETERS		INCHES		NOTES
	MIN.	MAX.	MIN.	MAX.	
A	10.7	11.0	.422	.433	
A_1	3.0	3.2	.119	.125	
A_2	3.0	3.2	.119	.125	
ϕb	.600	.750	.024	.030	2
b_1	.50 NOM.		.020 NOM.		2
D	24.3	24.7	.957	.972	
D_1	11.6	12.0	.457	.472	
D_2	3.0	3.3	.119	.129	
e_1	6.9	7.5	.272	.295	
e_2	2.3	2.8	.091	.110	
E	6.15	6.35	.243	.249	
L	8.00		.315		
ϕp	3.2	3.4	.126	.133	
Q	18.9	19.2	.745	.755	
R	1.3 NOM.		.051 NOM.		
R_1	1.3 NOM.		.051 NOM.		
R_2	1.3 NOM.		.051 NOM.		
S	.85	1.0	.034	.039	
S_1	3.45	3.75	.136	.147	
T	2.6 NOM.		.103 NOM.		3

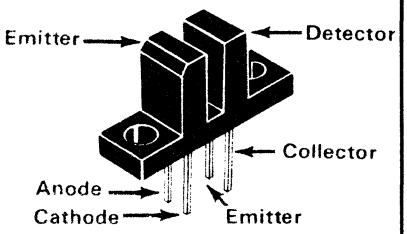

PS193

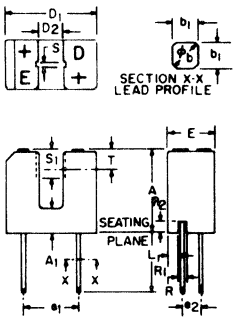

NOTES:
1. INCH DIMENSIONS ARE DERIVED FROM MILLIMETERS.
2. FOUR LEADS. LEAD CROSS SECTION IS CONTROLLED BETWEEN 1.27 MM (.050") FROM SEATING PLANE AND THE END OF THE LEADS.
3. THE SENSING AREA IS DEFINED BY THE "S" DIMENSION AND BY DIMENSION "T" ±0.75 MM (±.030 INCH).

SYMBOL	MILLIMETERS		INCHES		NOTES
	MIN.	MAX.	MIN.	MAX.	
A	10.7	11.0	.422	.433	
A_1	3.0	3.2	.119	.125	
ϕb	.600	.750	.024	.030	2
b_1	.50 NOM.		.020 NOM.		2
D_1	11.6	12.0	.457	.472	
D_2	3.0	3.3	.119	.129	
e_1	6.9	7.5	.272	.295	
e_2	2.3	2.8	.091	.110	
E	6.15	6.35	.243	.249	
L	8.00		.315		
R	1.3 NOM.		.051 NOM.		
R_1	1.3 NOM.		.051 NOM.		
R_2	1.3 NOM.		.051 NOM.		
S	.85	1.0	.034	.039	
S_1	3.45	3.75	.136	.147	
T	2.6 NOM.		.103 NOM		3

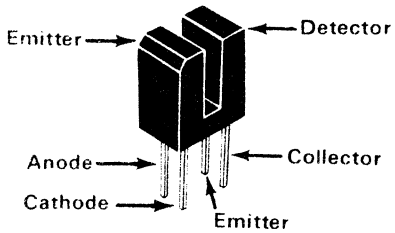

PS194

NOTES:
1. DIMENSIONS IN mm (INCHES)
2. UNLESS OTHERWISE SPECIFIED THE TOLERANCE ON ALL DIMENSIONS IS ±.38mm (±.015")

WARNING:
1. LOCK NUT AND BARREL SHOULD NOT BE DISTURBED.
2. SCREWS ENTERING THE 2-56 THREADED MOUNTING HOLES MUST NOT TOUCH BOTTOM.
3. THE HFBR-3001 TO -3005 CONNECTOR SHOULD NOT BE TIGHTENED BEYOND THE LIMITS SPECIFIED IN THE HFBR-3001 TO -3005 DATA SHEET.

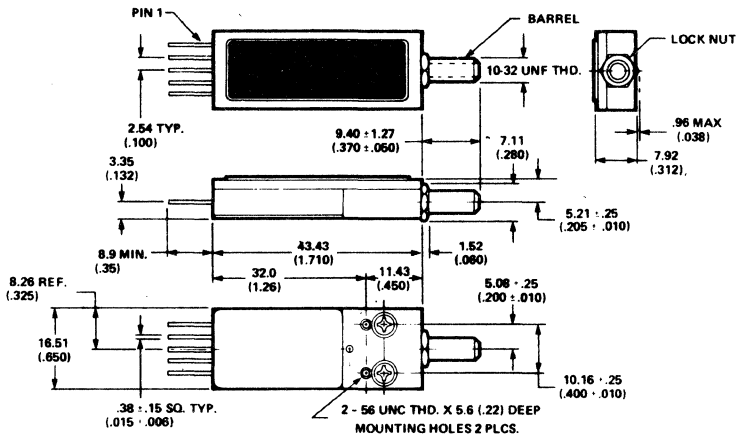

PS196

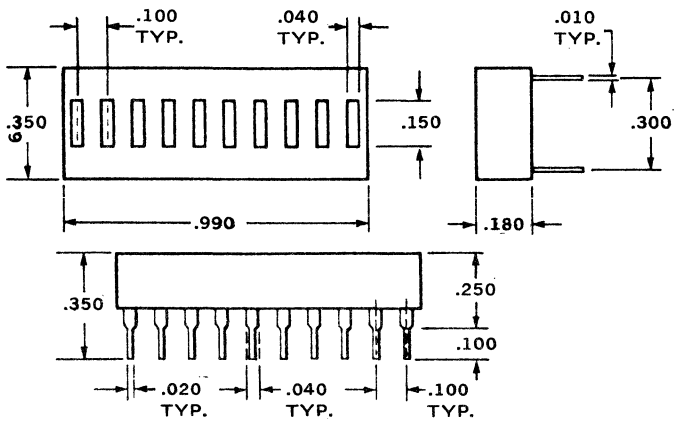

49. OUTLINE DRAWINGS

PS197

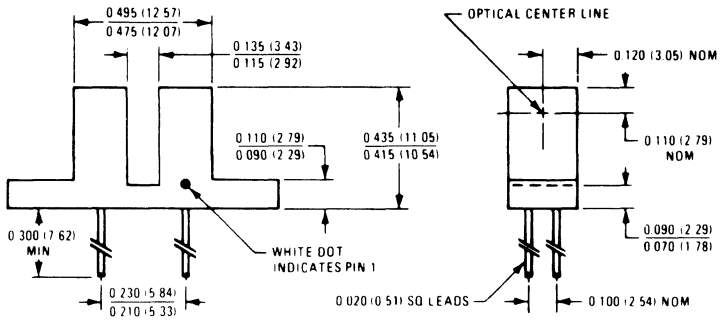

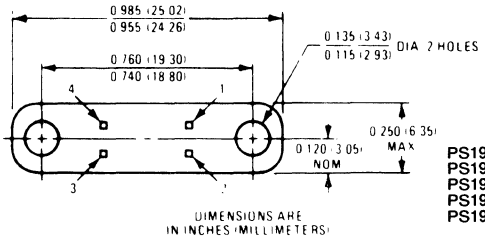

APERTURE SIZE	
PS197	0.010 x 0.040 (0.25 x 1.02)
PS197a	0.007 x 0.040 (0.18 x 1.02)
PS197b	0.005 x 0.040 (0.13 x 1.02)
PS197c	0.003 x 0.040 (0.08 x 1.02)
PS197d	.037 dia

PS200

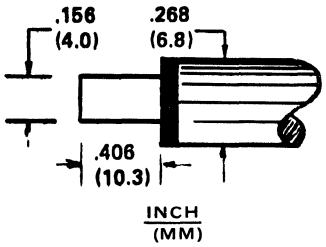

PS204

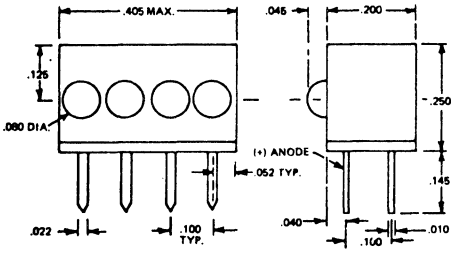

PS205

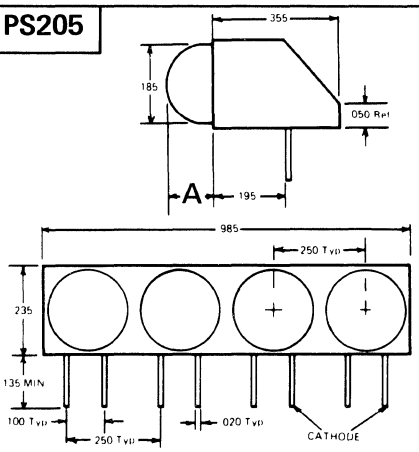

Suffix	A
PS205	.125
PS205a	.183

PS206

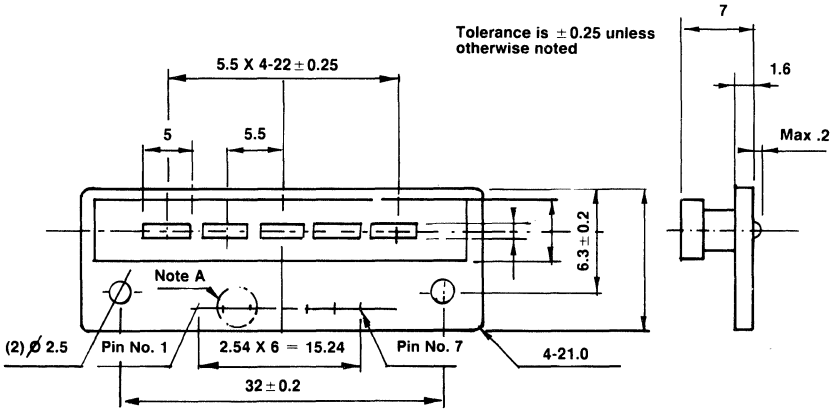

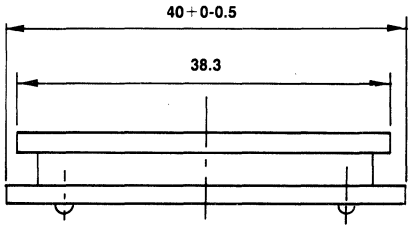

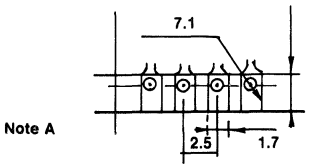

49. OUTLINE DRAWINGS

PS189

(all dimensions in mm) Dimension* refers to distance between window and active surface.

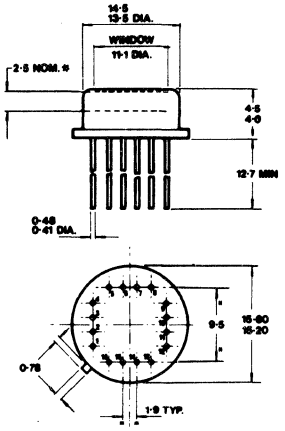

PIN 1	CAN (ISOLATED)	PIN 9	CAN (ISOLATED)
. 2	+VE SUPPLY	. 10	+VE SUPPLY
. 3	−VE "	. 11	−VE "
. 4	OUTPUT 1	. 12	OUTPUT 3
. 5	GROUND	. 13	GROUND
. 6	+VE SUPPLY	. 14	+VE SUPPLY
. 7	−VE "	. 15	−VE "
. 8	OUTPUT 2	. 16	OUTPUT 4

PS215

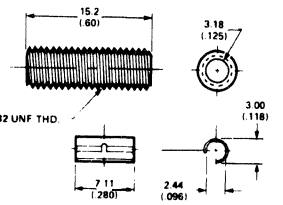

CAUTION:
COUPLING SHOULD NOT BE OVERTIGHTENED SEE OPTICAL/MECHANICAL CHARACTERISTICS AND NOTE 4

NOTES
1. DIMENSIONS ARE IN mm (INCHES).
2. UNLESS OTHERWISE SPECIFIED, THE TOLERANCES ARE.
   X · 51mm (.XX · 02 in.)
   .XX · 13mm (.XXX · 005 in.)
3. POLISHED FIBER END IS LOCKED FLUSH WITH FERRULE FACE

PS207

Unit in mm
Tolerance is ±0.25 unless otherwise noted

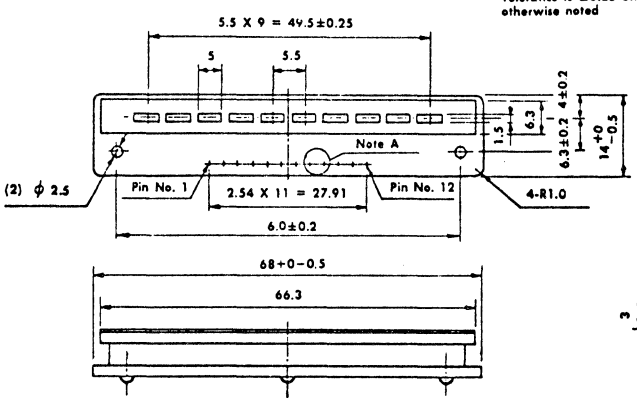

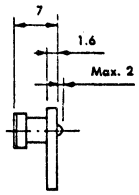

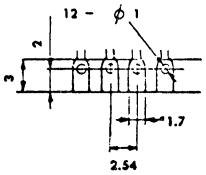

PS216

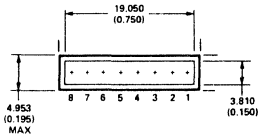

PS216b

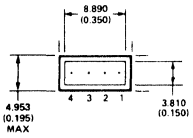

PS216a

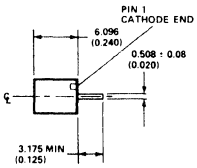

PS216a,b

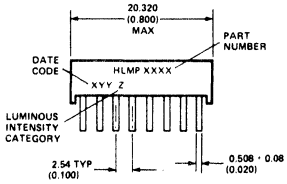

PS216b

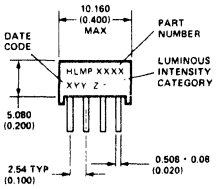

PS216a

PS186

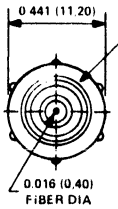

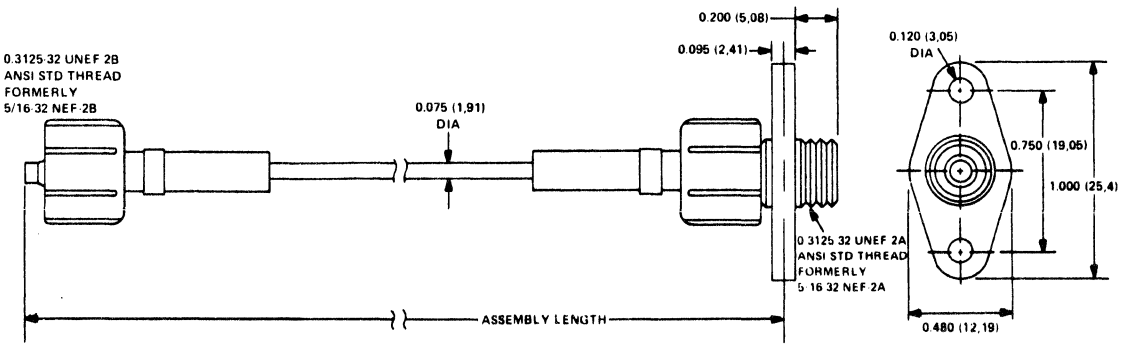

CABLE: PFX—PIR140 CONNECTOR: 1—530530

ALL DIMENSIONS ARE NOMINAL AND ARE SHOWN IN INCHES AND PARENTHETICALLY IN MILLIMETERS.

49. OUTLINE DRAWINGS

PS217

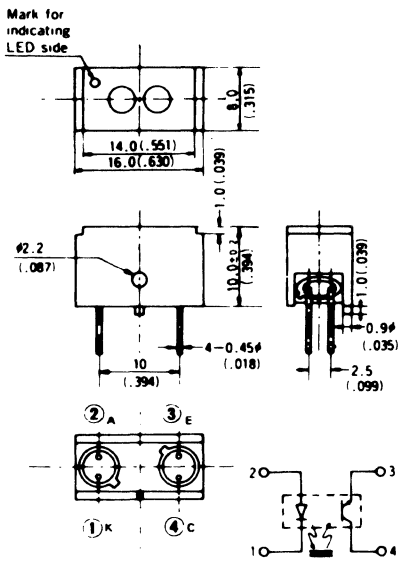

PS218

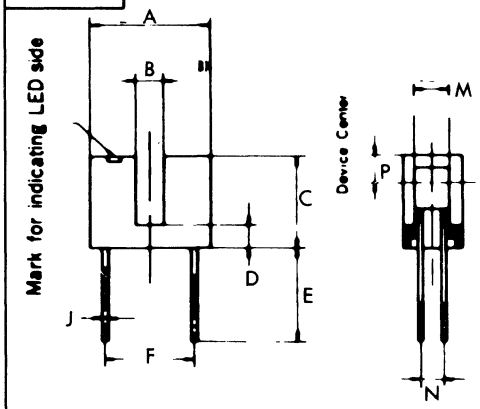

	A	B	C	D	E	F	J	K	M	N	P
PS218	.500 .524	.118 TYP	.385 .402	.098 TYP	.276 MIN	.382 .406	.018	.236 .252	.130 .146	.100	.118 TYP
PS218a	.531 .555	.100 TYP	.339 .354		.315 MIN	.394	.019	.228 .244	.157	.100	.118
PS218b	.500	.100	.425	.175	.250 MIN	.300	.020	.250		.100	.075
PS218c	.500	.100	.425		.500 MIN	.300	.025	.250		.100	.075
PS218d	.500 .524	.189 .205	.386 .402	.098 TYP	.236 MIN	.394					.071 .087
PS218e	.500	.100	.425	.165	.250 MIN	.300	.022	.250		.100	
PS218f	.500	.100	.425	.165	.250 MIN	.300	.023	.250		.100	
PS218g	.480 .509	.137 TYP	.303 .326	.098 TYP	.314 MIN	.381 .405	.015 TYP	.196 TYP	.090 .106	.090 .106	.098 TYP
PS218h	.535 .551	.122 TYP	.338 .354	.070 TYP	.393 MIN	.381 .405	.019 TYP	.228 .244	.092 .107	.092 .107	.118 TYP

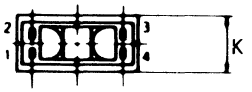

PS219

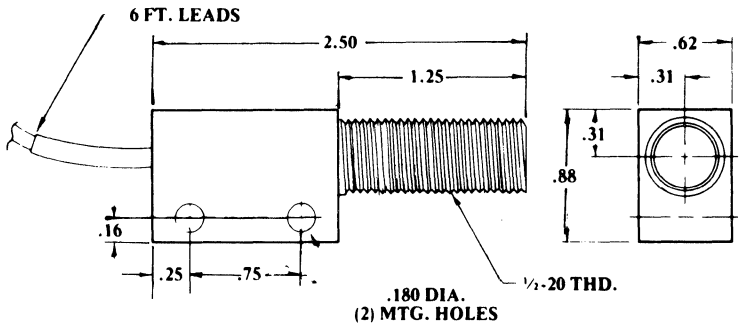

PS220

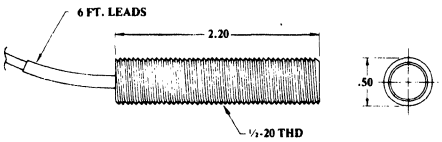

PS221

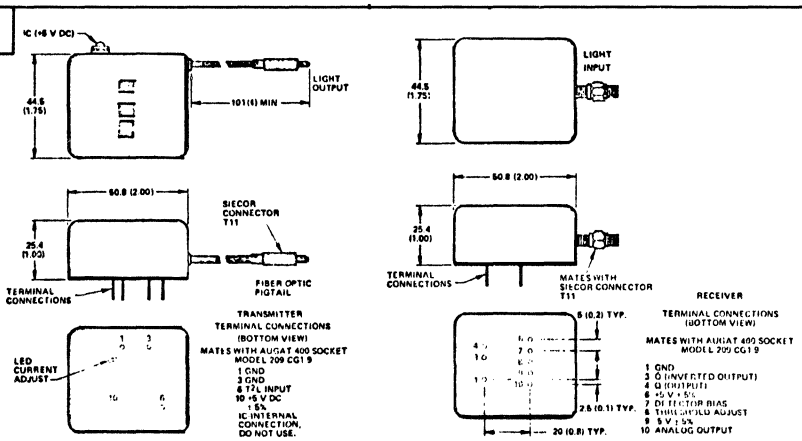

PS222

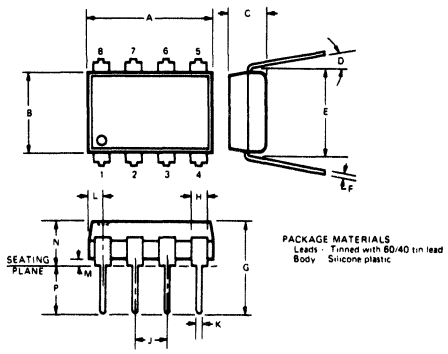

PACKAGE MATERIALS
Leads - Tinned with 60/40 tin lead
Body - Silicone plastic

SYMBOL	INCH MAX.	MM. MAX.	NOTES
A	.410	10.29	
B	.270	6.86	
C	.130	3.30	
D	.15	.15	
E	.300 Ref	7.62 Ref	1
F	.014	0.36	
G	.325	8.26	
H	.070	1.78	
J	.110	2.79	
K	.022	0.56	
L	.055	1.40	2
M			3
N	.175	4.45	4
P			3

NOTES
1 Installed position of lead centers
2 Four places
3 Overall installed position
4 These measurements are made from the seating plane

PIN	
1	V_{IN}
2	N/C
3	V_{IN}
4	N/C
5	GROUND
6	V_O
7	AUX
8	V_{CC}

49. OUTLINE DRAWINGS

PS224

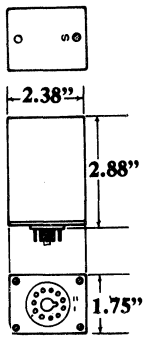

PS244h – 0.040 x 0.006 (1.02 x 0.152) *

* Aperture size

PS225

NOTES: OUTSIDE WALL THICKNESS 0.508 (0.020) TYPICAL ALL PACKAGES
DIMENSIONS IN INCHES AND (MILLIMETRES)

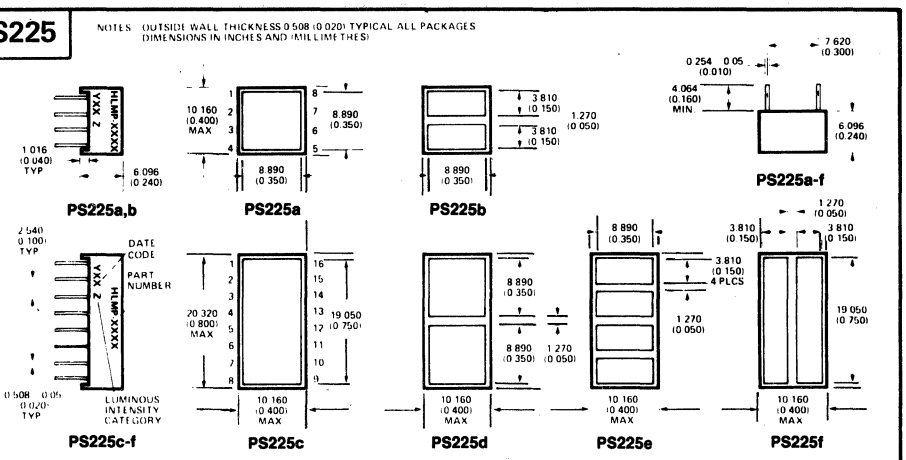

PS226

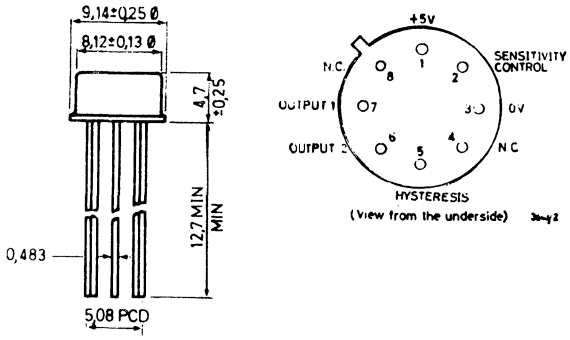

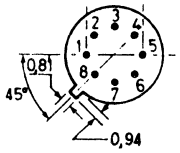

External Hysteresis Resistor connected between pins 5 and 7

PS232

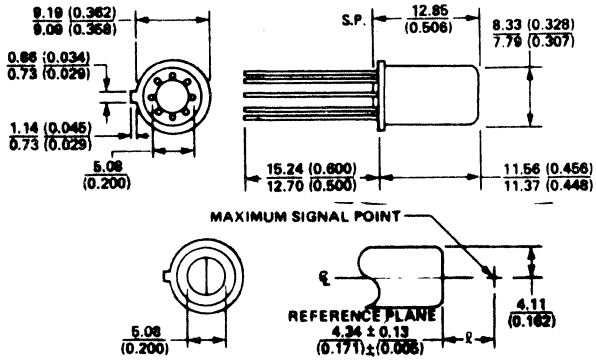

NOTES:
1. ALL DIMENSIONS IN MILLIMETERS AND (INCHES).
2. ALL UNTOLERANCED DIMENSIONS ARE FOR REFERENCE ONLY.
3. THE REFERENCE PLANE IS THE TOP SURFACE OF THE PACKAGE.
4. NICKEL CAN AND GOLD PLATED LEADS.
5. S.P. SEATING PLANE.
6. THE LEAD DIAMETER IS 0.45mm (0.018in.) TYP.

PS233

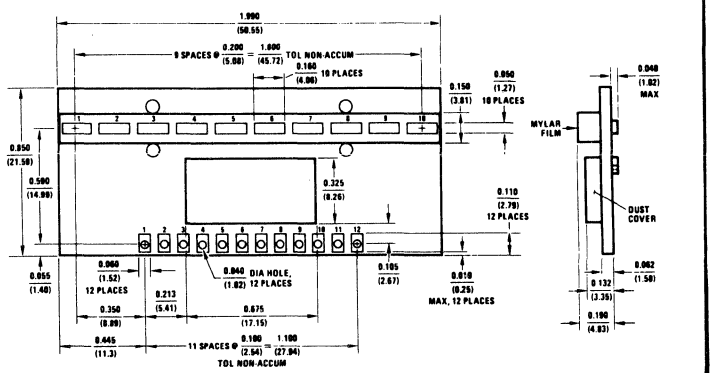

PS234

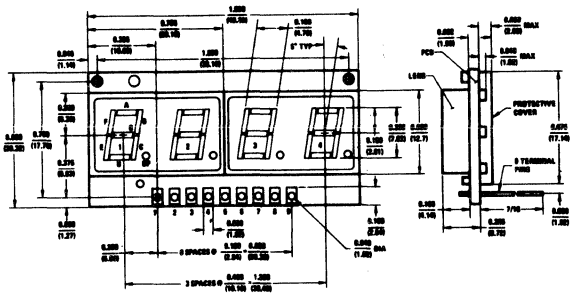

49. OUTLINE DRAWINGS

PS240

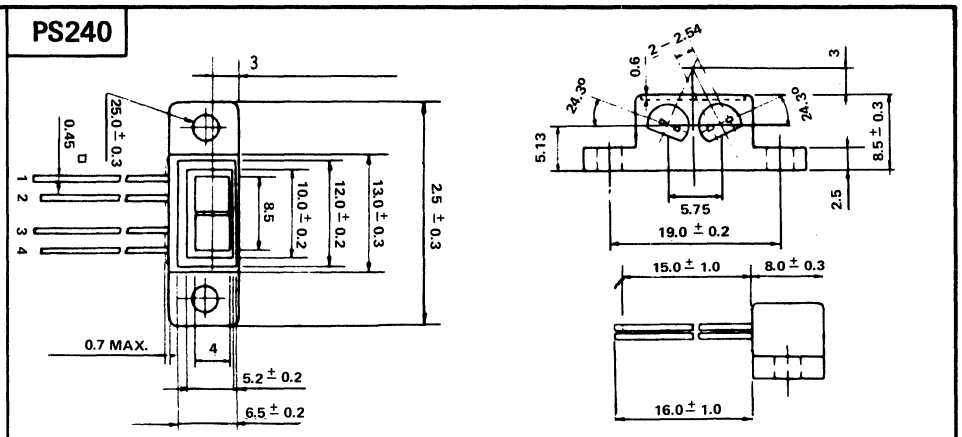

PS238

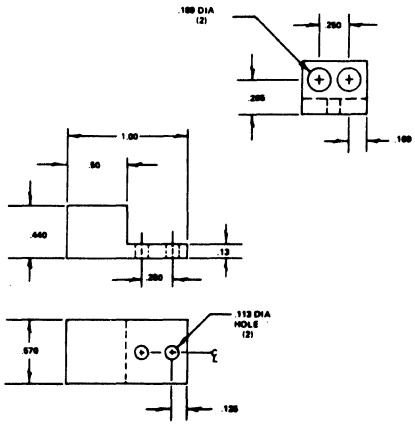

PS242

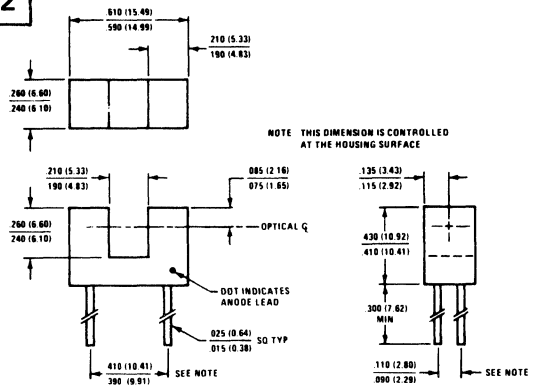

PS243

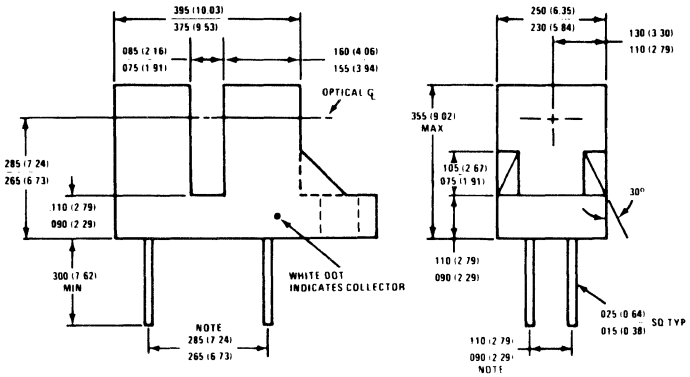

APERTURE SIZE	
PS243	.010 x .040 (0.25 x 1.02)
PS243a	.007 x .040 (0.18 x 1.02)
PS243b	.005 x .040 (0.13 x 1.02)
PS243c	.010 x .060
PS243d	.007 x .060
PS243e	.005 x .060
PS243f	.003 x .060
PS243g	None

PS244

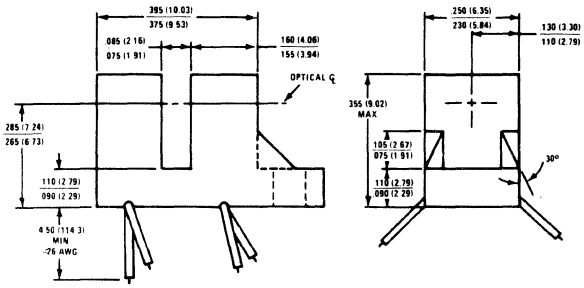

APERTURE SIZE	
PS244	.012 x .040 (0.30 x 1.02)
PS244a	.007 x .040 (0.18 x 1.02)
PS244b	.005 x .040 (0.13 x 1.02)
PS244c	.010 x .060
PS244d	.007 x .060
PS244e	.005 x .060
PS244f	.003 x .060
PS244g	None

Color Coding: PS244e thru g
ANODE: Orange
CATHODE: Green
COLLECTOR: White
EMITTER: Blue

49. OUTLINE DRAWINGS

PS248

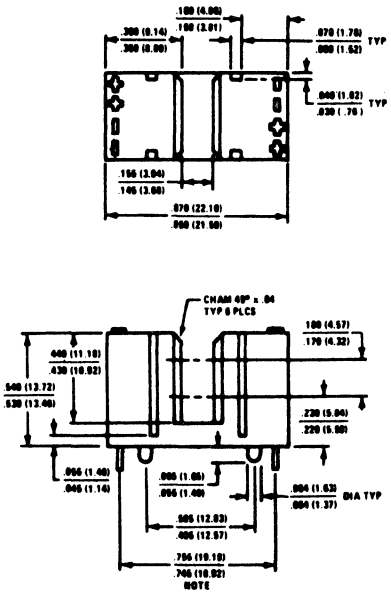

PS249

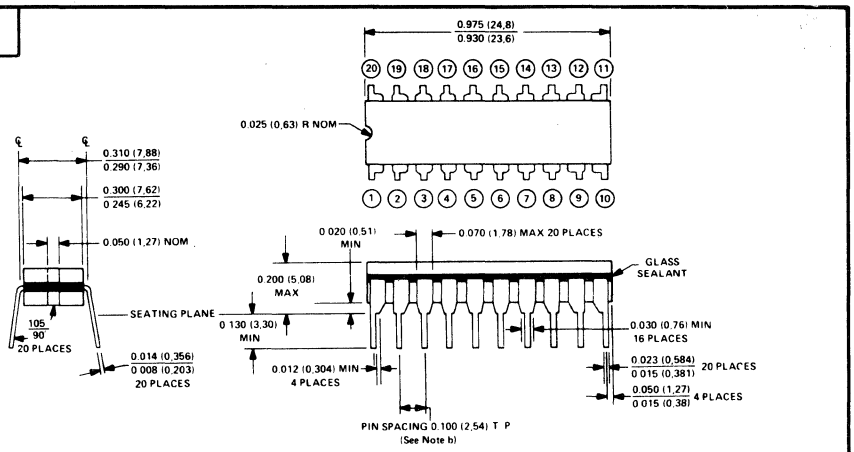

PS250

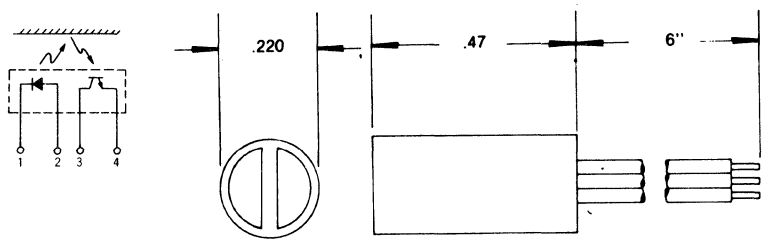

PS253

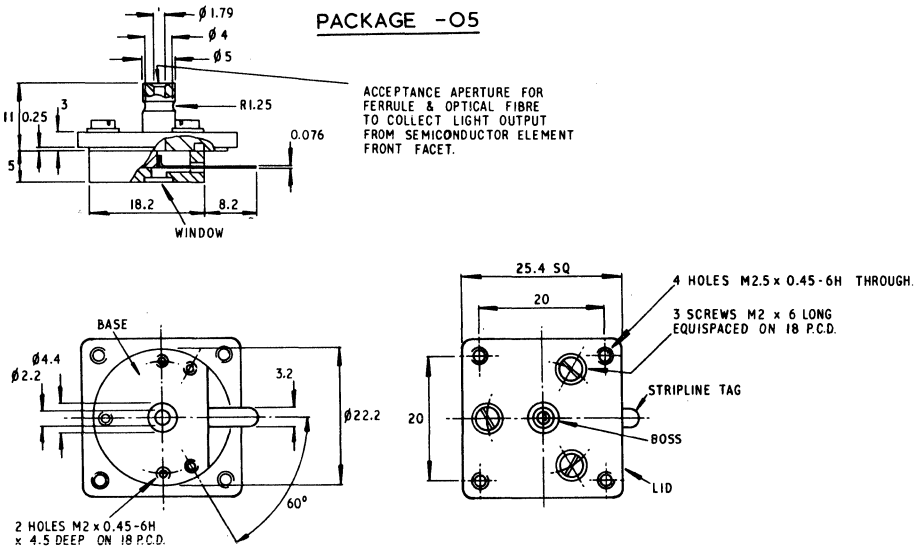

Dimensions : mm nominal.
Polarity : case positive
tab negative
Finish : metal parts
gold plated
Main body : Mild steel
Heatsink : OFHC Copper

PS247

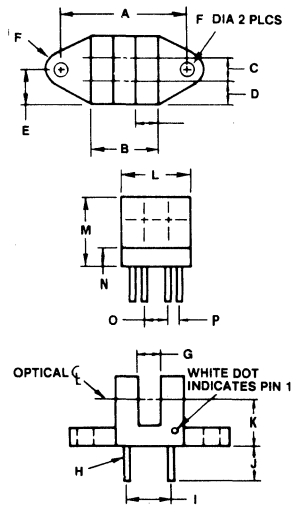

	A	B	C	D
PS247	.690 (17.53) .710 (18.03)	.390 (9.91) .410 (10.41)	.207 (5.26) .217 (5.51)	.109 (2.77) .119 (3.02)
PS247a	.700	.420	.212	.120

E	F	G	H	I	J
.210 (5.33) .230 (5.84)	.120 (3.05) .130 (3.30)	.090 (2.29) .110 (2.79)	.015 (10.38) .025 (0.64)	.300 (7.62)	.300 (7.62)
-	.125	.100	.020	.300	.45 MIN

K	M	N	O	P
.265 (6.73) .285 (7.24)	.390 (9.91) .410 (10.41)	.090 (2.29) .110 (2.79)	.100 (2.54) .120 (3.05)	.090 (2.29) .110 (2.79)
-	.390	.10	.100 TYP	.100 TYP

49. OUTLINE DRAWINGS

PS254

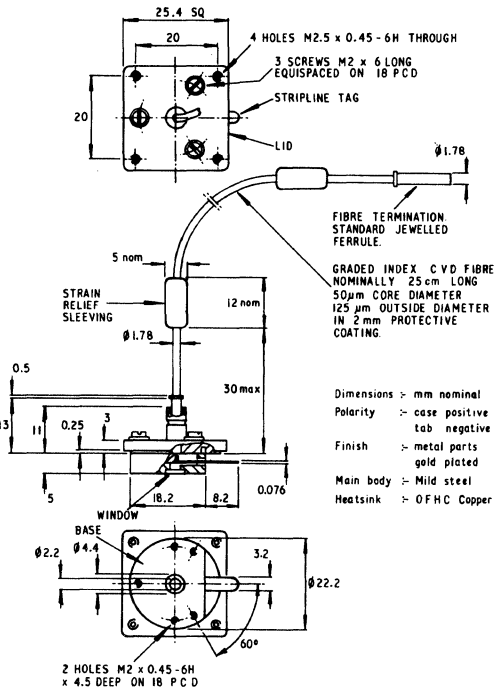

PS255

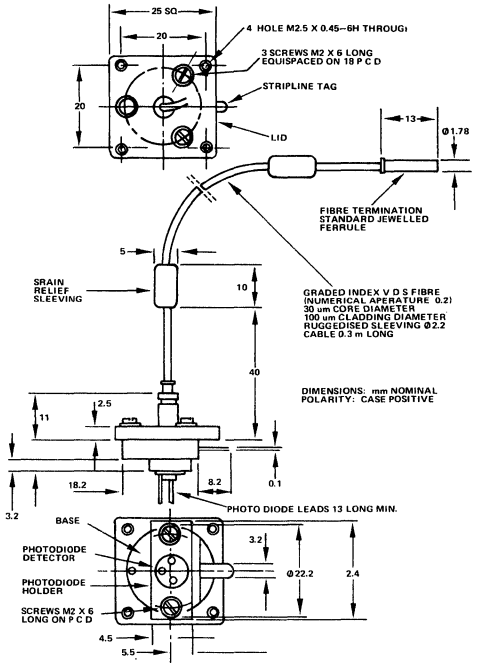

PS256

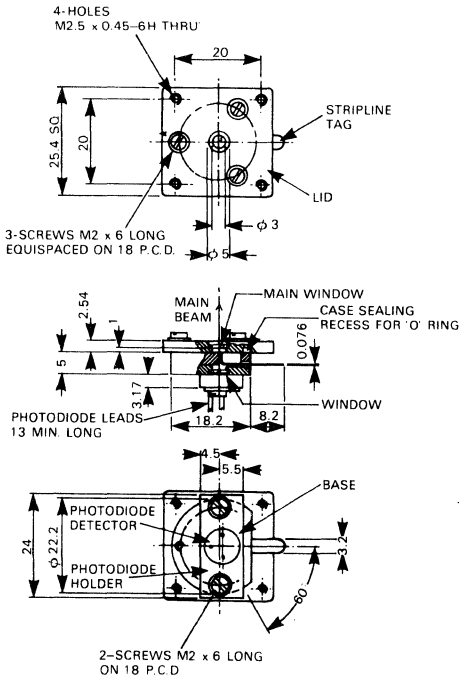

MATERIAL – MILD STEEL
FINISH – GOLD PLATE
POLARITY
CASE POSITIVE
STRIPLINE TAG NEGATIVE
DIMENSIONS IN MILLIMETRES

PS257

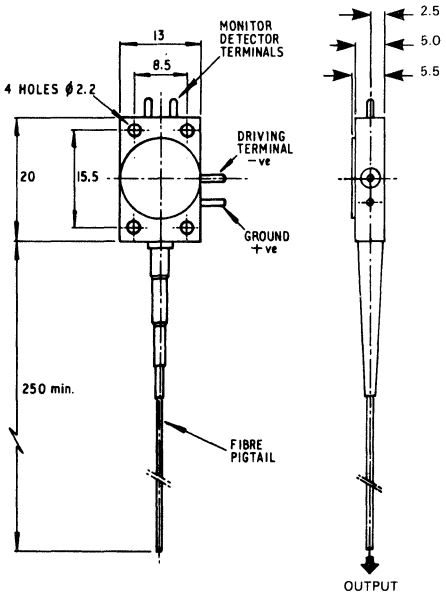

Dimensions in mm.

PS260

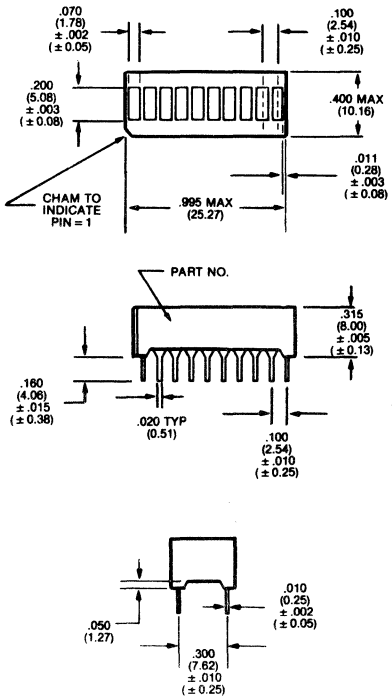

49. OUTLINE DRAWINGS

PS211

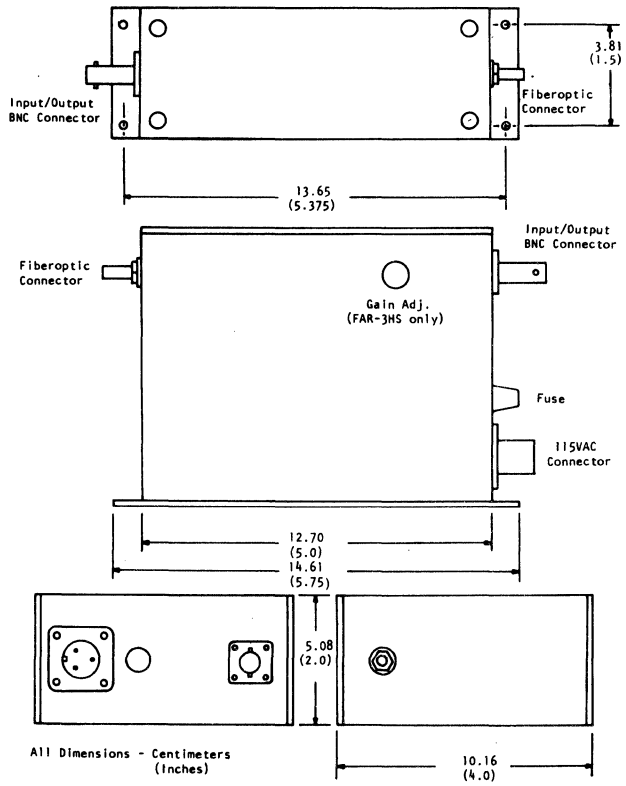

PS265

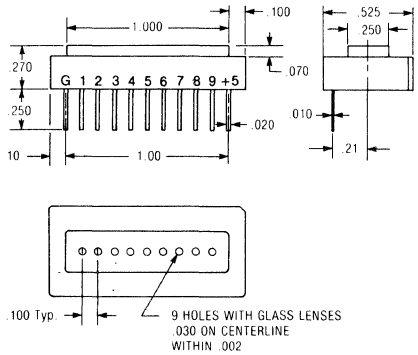

PS266

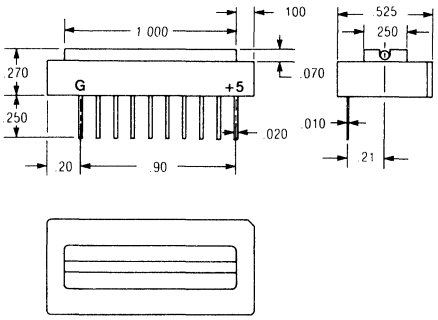

PS269

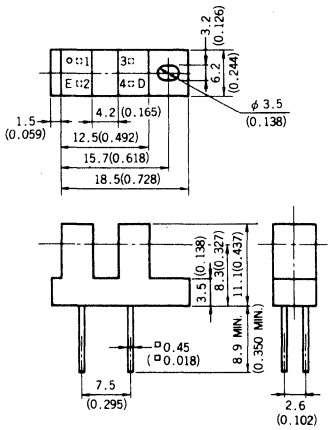

PS270

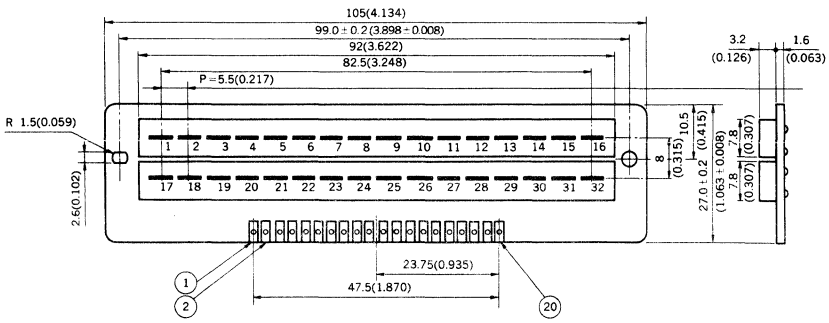

49. OUTLINE DRAWINGS

PS272

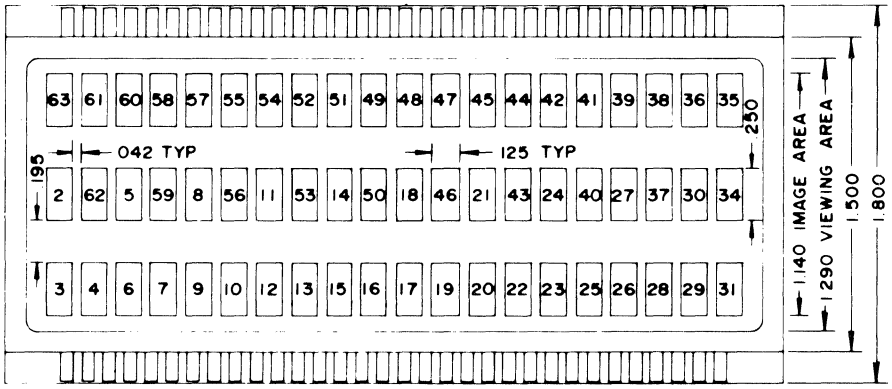

PS273

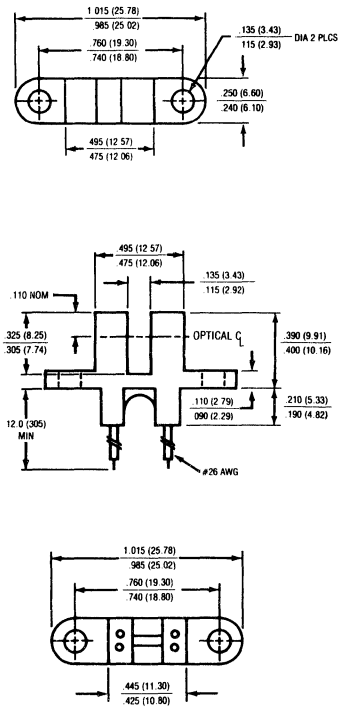

PS275

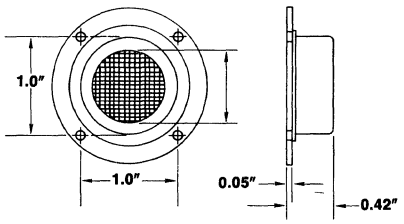

PS277

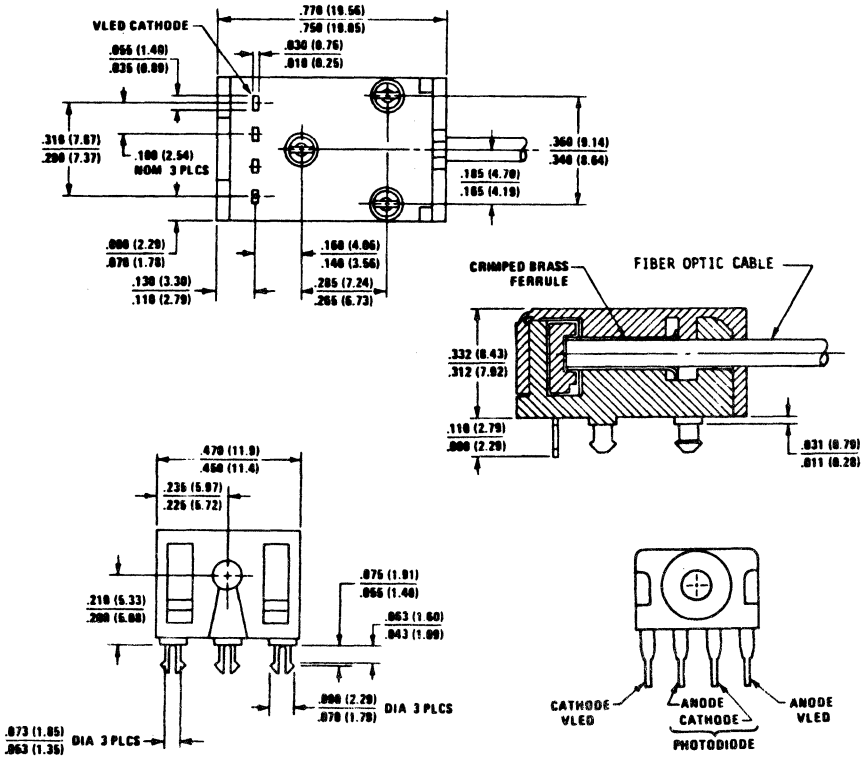

49. OUTLINE DRAWINGS

PS280

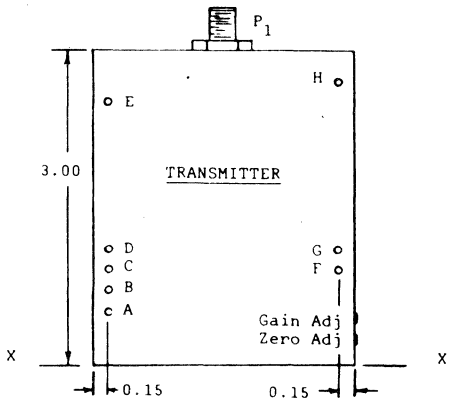

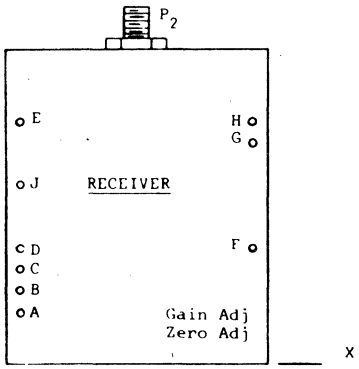

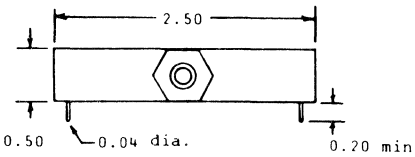

MECHANICAL DATA

Dimensions in inches. Tolerances: .xx ± 0.01, .xxx ± 0.002

Optical Connectors
P_1 .... AMP Optimate 227217-2
P_2 22717-2
(Amphenol 905,906 Series also available)

Transmitter

Pin	Function	From XX
A	-15V	0.50
B	COM	0.70
C	+15V	0.90
D	+5V	1.10
E	TTL Out	2.50
F	Analog In	0.90
G	Analog Ref	1.10
H	(Open)	2.70

Receiver

Pin	Function	From XX
A	-15V	0.50
B	COM	0.70
C	+15V	0.90
D	+5V	1.10
E	$\overline{\text{Enable}}$	2.30
F	(Open)	1.10
G	Analog Gnd	2.10
H	Analog Out	2.30
J	TTL In	1.70

PS281

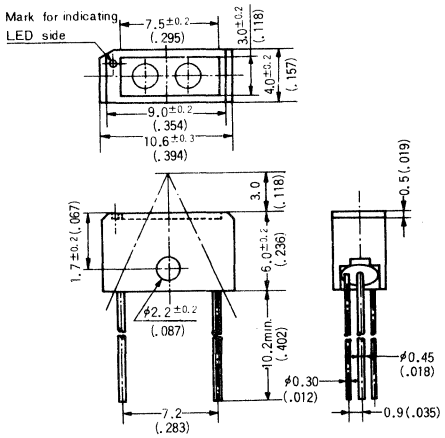

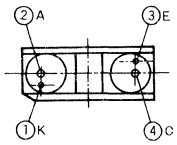

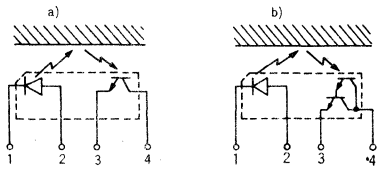

PS282

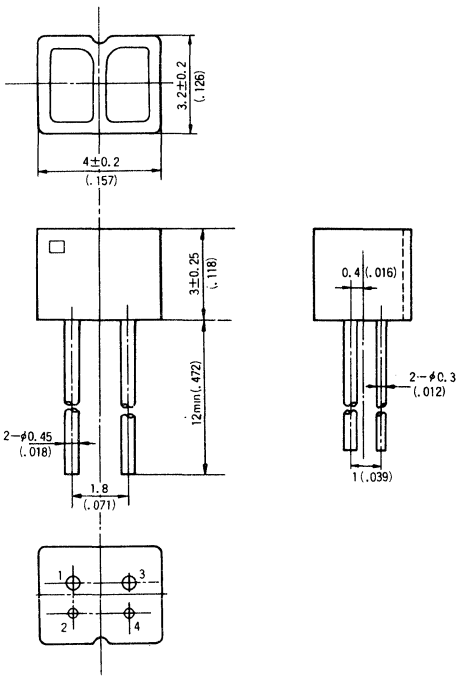

49. OUTLINE DRAWINGS

PS291

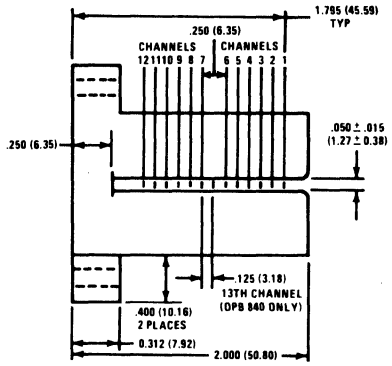

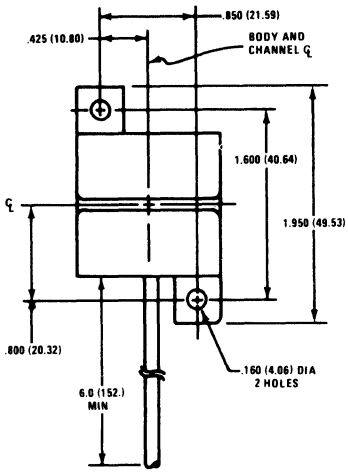

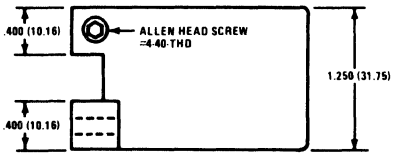

ALL DIMENSIONS ARE IN INCHES (MILLIMETERS WITH TOLERANCES OF ± 0.005 (± 0.13) UNLESS OTHERWISE NOTED.

PS293

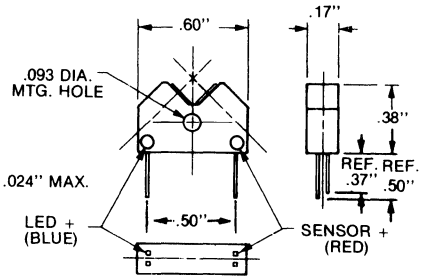

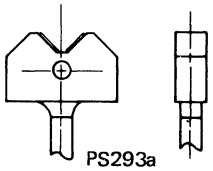

PS293a

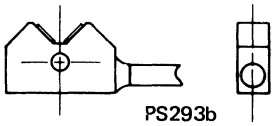

PS293b

PS295

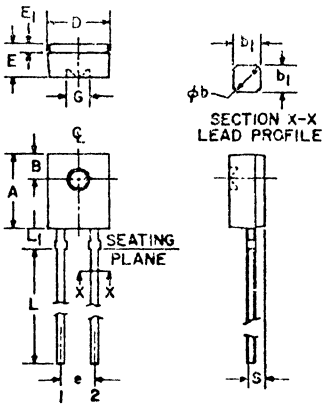

SYM	MILLI-METERS		INCHES		NOTES
	MIN	MAX	MIN	MAX	
A	5.59	5.80	.220	.228	
B	1.78	NOM.	.070	NOM	2
o b	.60	.75	.024	.030	1
b_1	.51	NOM.	.020	NOM.	1
D	4.45	4.70	.175	.185	
E	2.41	2.67	.095	.105	
E_1	.58	.69	.023	.027	
e	2.41	2.67	.095	.105	3
G	1.98	NOM.	.078	NOM.	
L	12.7	–	.500	–	
L_1	1.40	1.65	.055	.065	
S	.83	.94	.033	.037	3

NOTES:
1. Two leads. Lead cross section dimensions uncontrolled within 1.27 MM (.050") of seating plane.
2. Centerline of active element located within .25 MM (.010") of true position.
3. As measured at the seating plane.
4. Inch dimensions derived from millimeters.

PS296

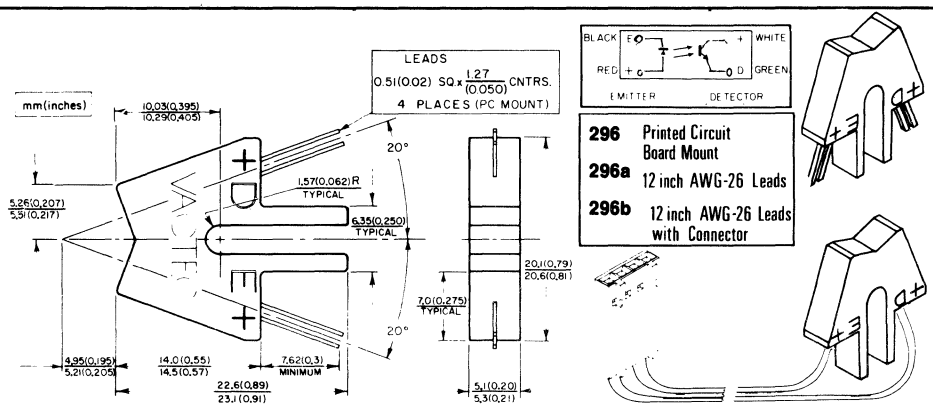

49. OUTLINE DRAWINGS

PS297

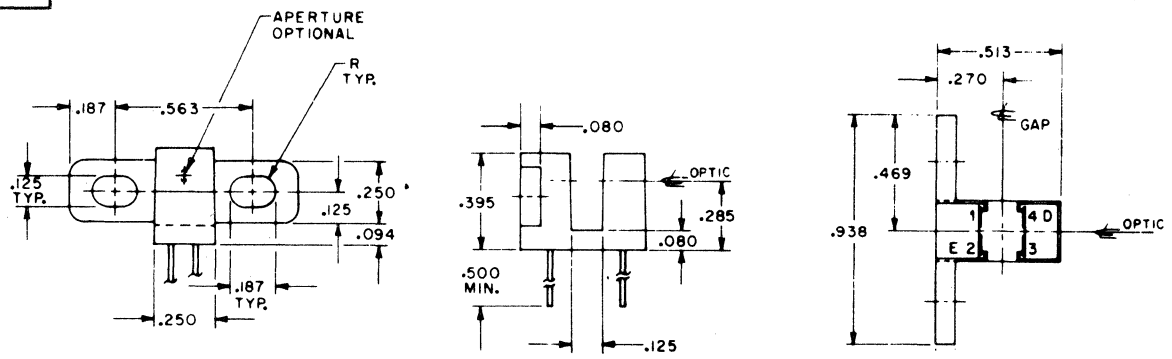

PS298

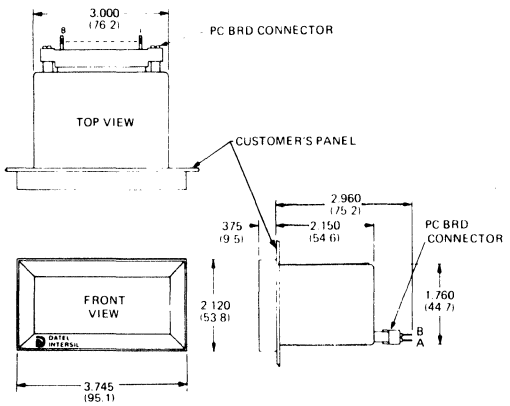

PS299

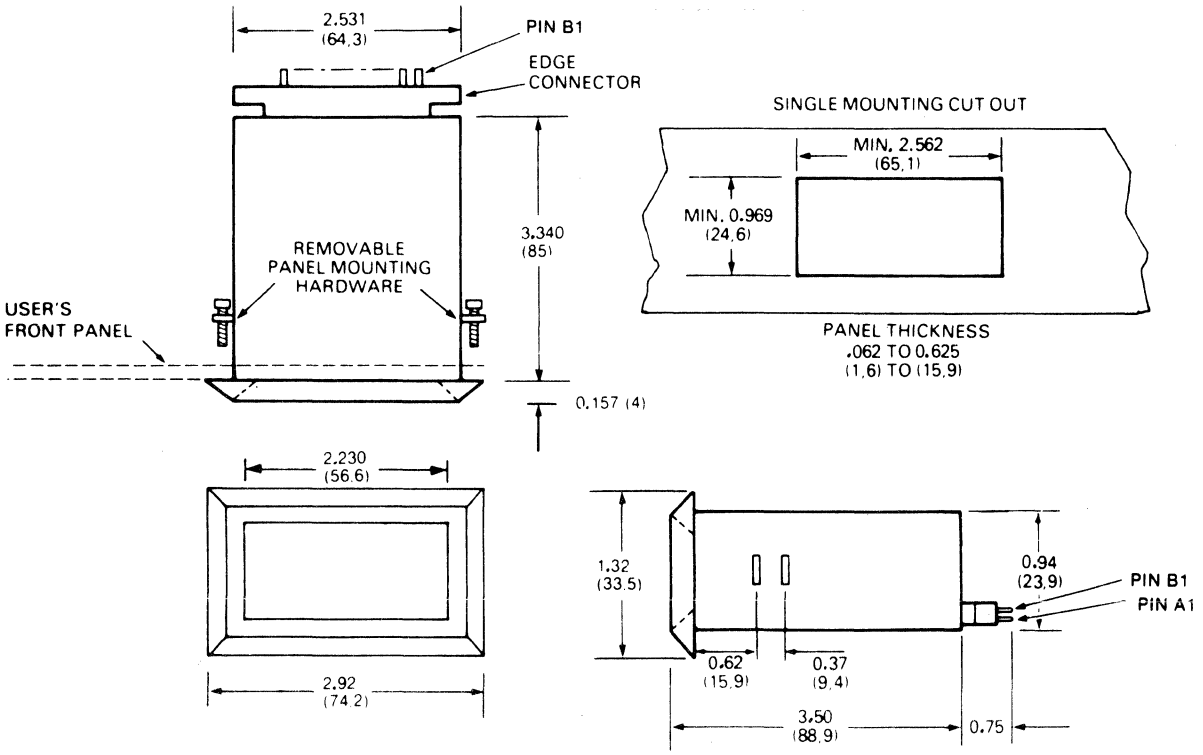

49. OUTLINE DRAWINGS

PS304

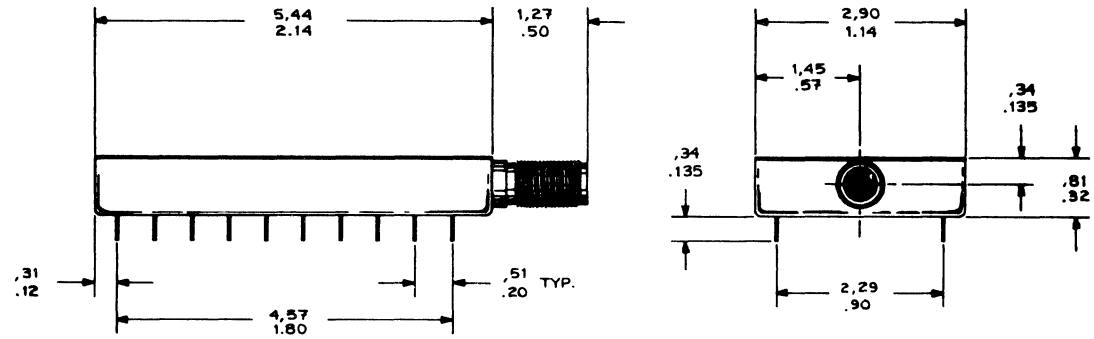

PS306

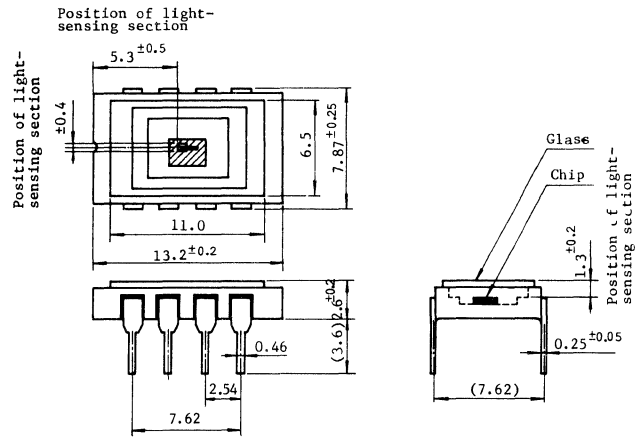

PS307

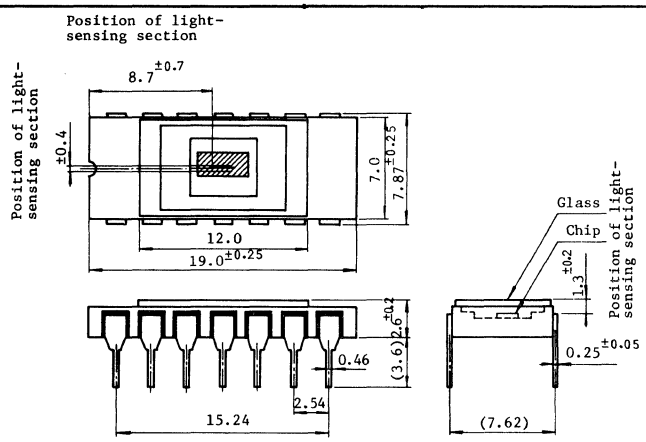

PS289

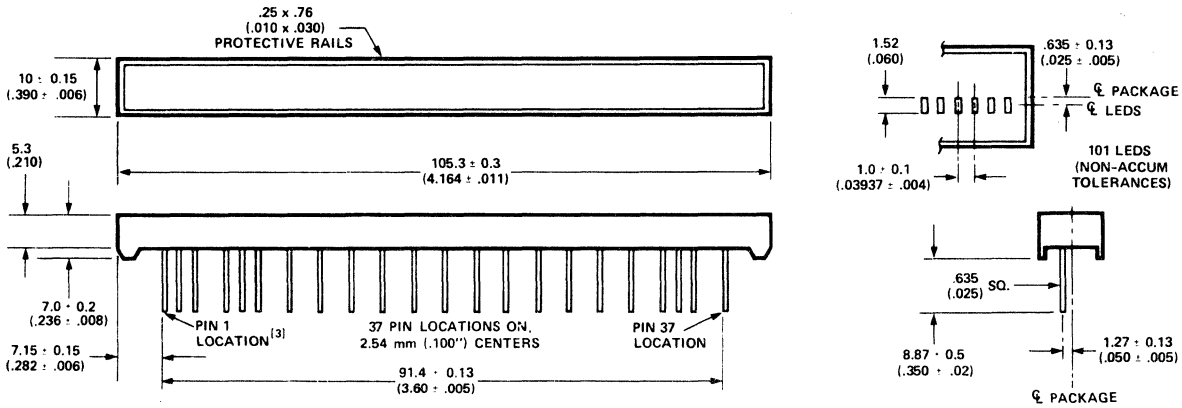

49. OUTLINE DRAWINGS

PS286

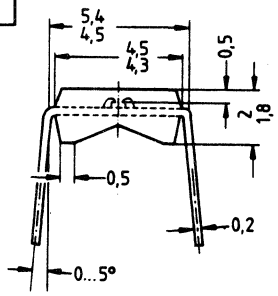

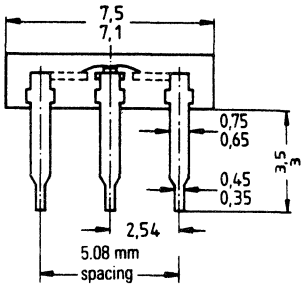

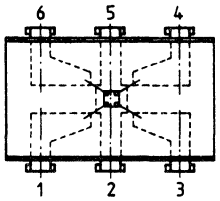

Dimensions in mm

PS290

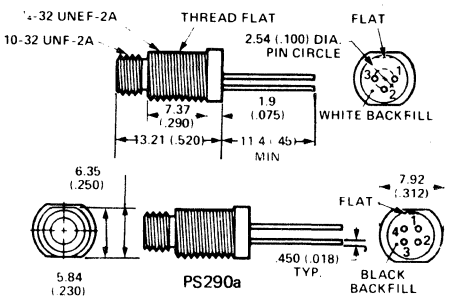

PS332

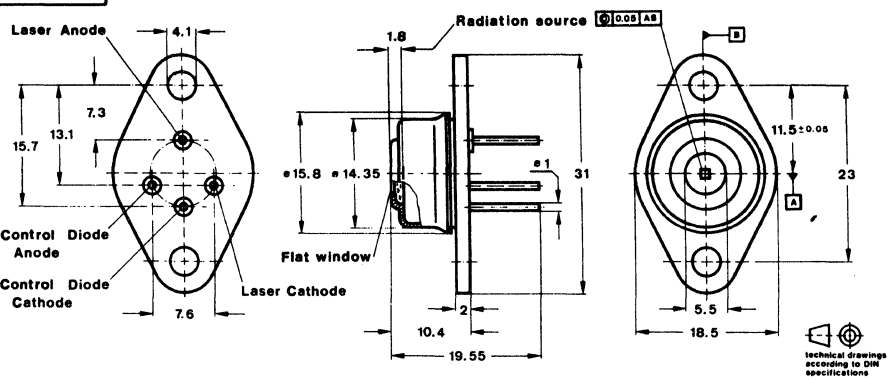

PS303

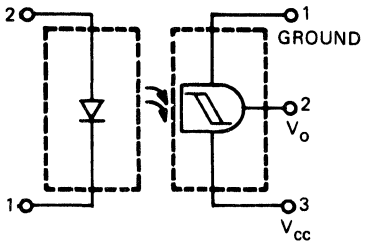

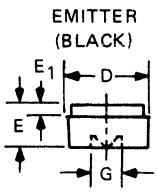

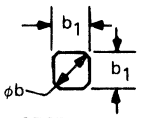

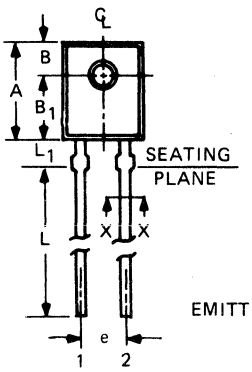

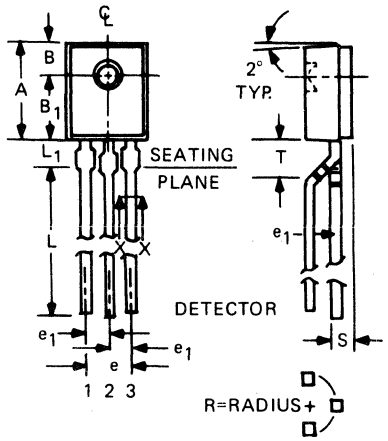

SYM.	MILLIMETERS		INCHES		NOTES
	MIN.	MAX.	MIN.	MAX.	
A	5.59	5.80	.220	.228	
B	1.78	NOM.	.070	NOM.	2
B_1	3.68	3.94	.145	.155	
ϕb	.60	.75	.024	.030	1
b_1	.51	NOM.	.020	NOM.	1
D	4.45	4.70	.175	.185	
E	2.41	2.67	.095	.105	
E_1	.58	.69	.023	.027	
e	2.41	2.67	.095	.105	3
e_1	1.14	1.40	.045	.055	3
G	1.98	NOM.	.078	NOM.	
L	12.7	—	.500	—	
L_1	1.40	1.65	.055	.065	1
R	1.27	NOM.	.050	NOM.	
S	.83	.94	.033	.037	3
T	—	1.65	—	.065	

NOTES:

1. Two leads. Lead cross section dimensions uncontrolled within 1.27 MM (.050") of seating plane.
2. Centerline of active element located within .25 MM (.010") of true position.
3. As measured at the seating plane.
4. Inch dimensions derived from millimeters.

49. OUTLINE DRAWINGS

PS308

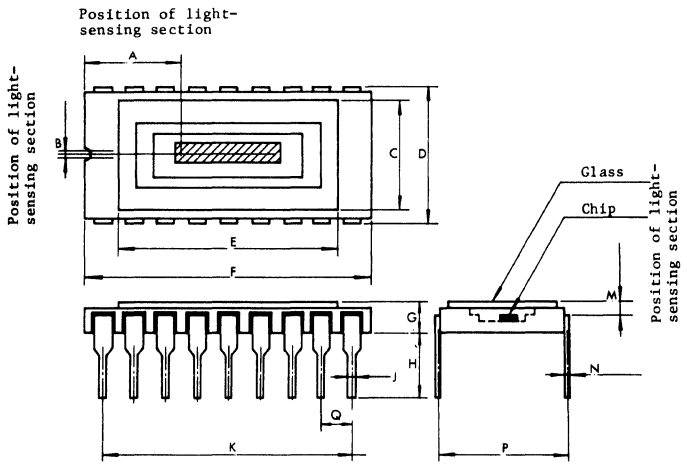

	A	B	C	D	E	F	G	H	J	K	M	N	P	Q
PS308	.276 .331		.335	.402 .421	.689	.896 .915	.091 .106	.197	.018	.800	.039 .055	.008 .012	.402	.100
PS308a	.169 .224		.236	.302 .318	.803	.872 .928	.087 .102	.126	.020	.800	.039 .055	.010	.300	.100
PS308b	.362 .409		.220 .228	.302 .318	.390 .398	.892 .908	.087 .110	.197 MIN	.020	.800 NOM	.035 .047	.008 .012	.300	.100 NOM
PS308c				.278 .298	.512	.890 .910	.090 .110	.190		.792 .808	.043 .053	.018 .022	.300 REF	.092 .108

PS309

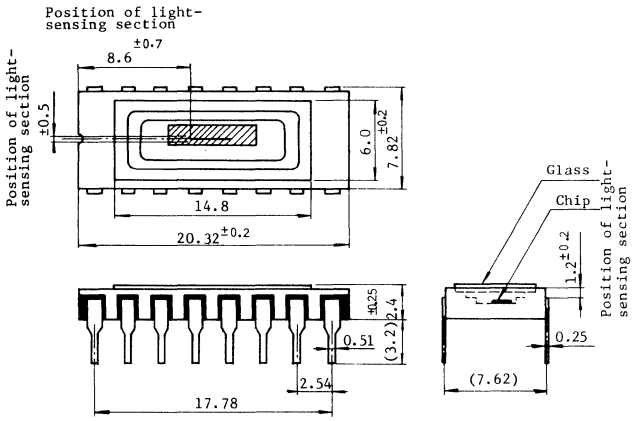

PS311

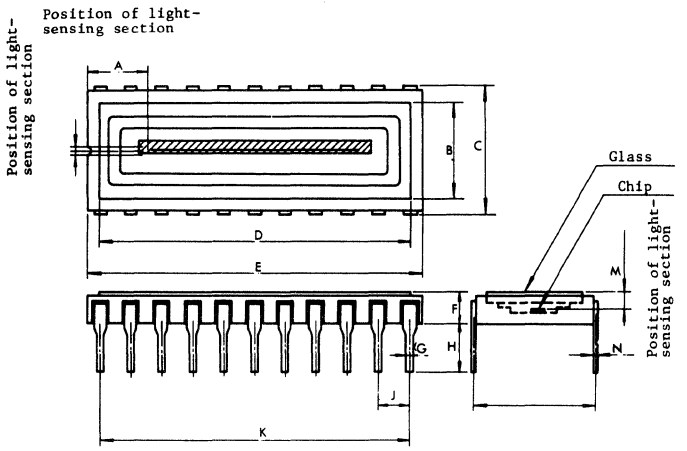

	A	B	C	D	E	F	G	H	J	K	M	N	P
PS311	.169 .224	.311	.402 .417	1.008	1.068 1.092	.094 .110	.020	.157	.100	1.000	.041 .057	.010	.400
PS311a	.268 .323	.307	.402 .417	1.378	1.583 1.615	.091 .106	.020	.157 MIN	.100 NOM	.992 1.008	.041 .057	.010	.400
PS311b	.421 .461	.354	.400 .420	.433	1.068 1.092	.054 .066	.020	.177 MIN	.100 NOM	.969 1.031	.041 .057		.400
PS311c	.241		.378 .398		1.120 1.380	.090 .110		.190	.092 .108	.992 1.008	.043 .053		.400 REF
PS311d	.288		.378 .398		1.584 1.616	.090 .110		.190	.092 .108	.992 1.008	.043 .053		.400 REF

49. OUTLINE DRAWINGS

PS316

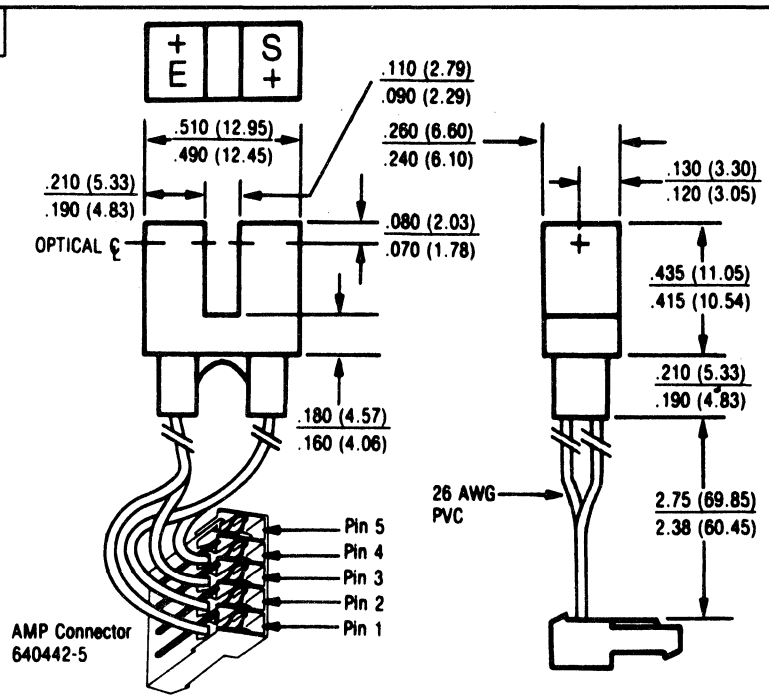

Wire Color	Pin #
Brown	1
Orange	2
Black	3
Red	4
	5 (Open)

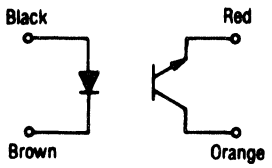

PS317b

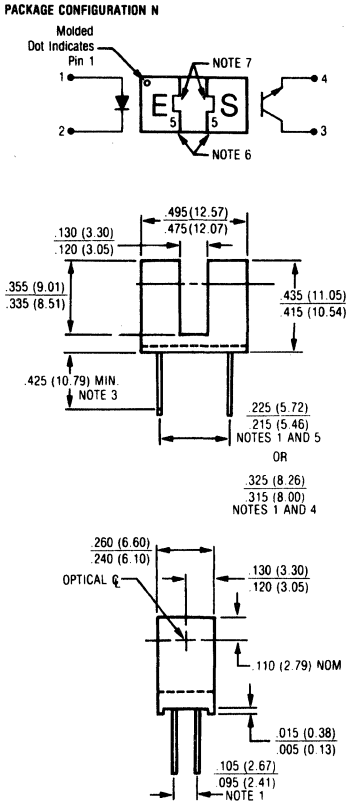

PS317

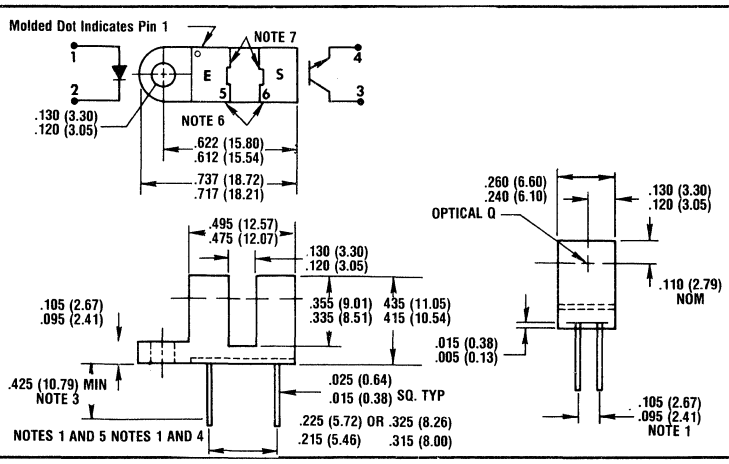

1. Dimension controlled at housing surface only.
2. Housing is soluble in chlorinated hydrocarbons and Ketones Methanol and isopropanol are recommended as cleaning agents.
3. Cathode lead. All other leads are 06 (1.52) nom longer.
4. OPB860 OPB861 OPB862 OPB870 OPB871 OPB872.
5. OPB865 OPB866 OPB867 OPB875 OPB876 OPB877.
6. Molded number to identify aperture size. See part number guide.
7. Dimensions of aperture opening dependent on housing material. See part number guide.
8. Housings shown are polycarbonate.

PS317a

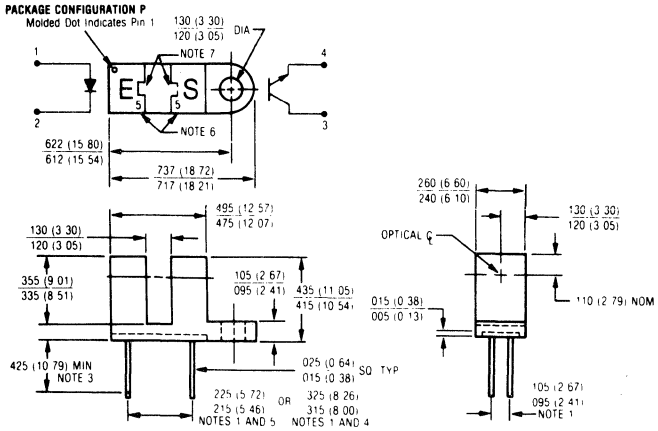

49. OUTLINE DRAWINGS

PS318

PACKAGE CONFIGURATION T

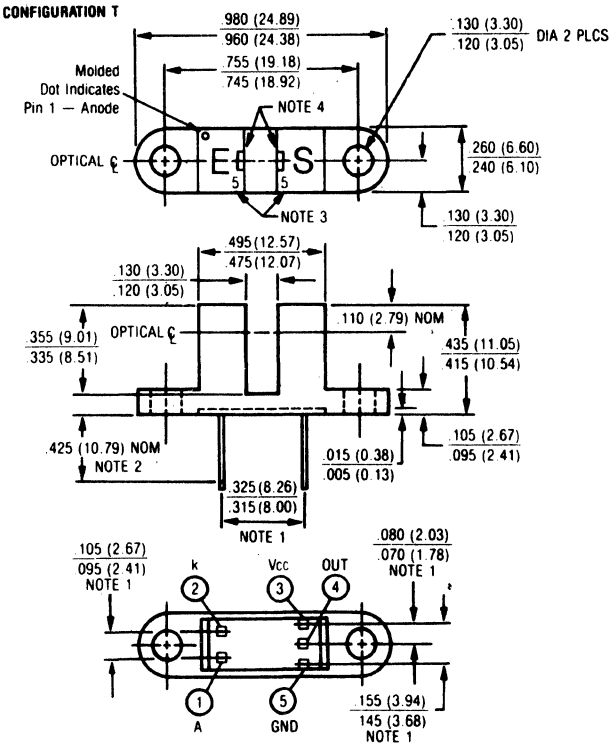

PACKAGE CONFIGURATION N

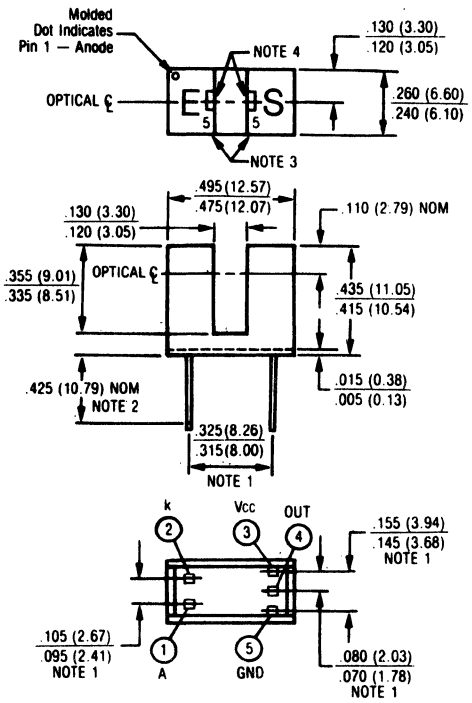

PS318a

PACKAGE CONFIGURATION L

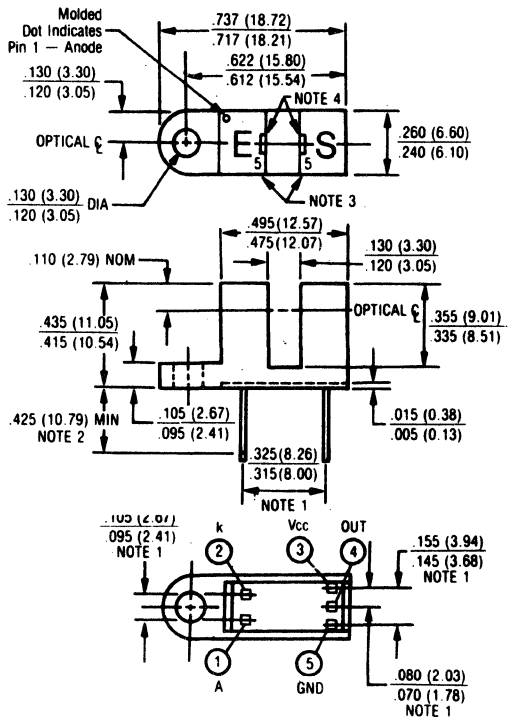

PS318b

Dimensions are in inches (millimeters).

PACKAGE CONFIGURATION P

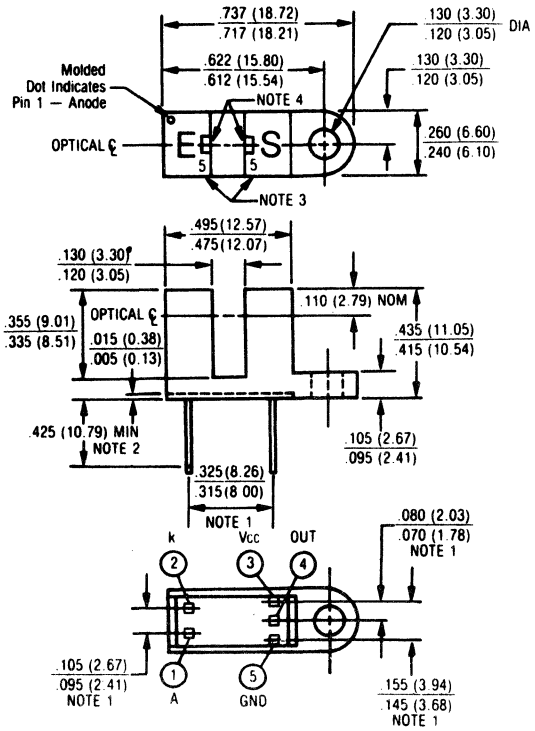

PS318c

NOTES:
1. This dimension is controlled at housing surface.
2. Cathode lead. All other leads are .06 (1.52) nom. longer.
3. Molded number to identify aperture size. See part number guide.
4. Dimensions of aperture opening dependent on housing material. See part number guide.
5. Housing is soluble in chlorinated hydrocarbons and ketones. Methanol and isopropanol are recommended as cleaning agents.
6. Housings shown are polycarbonate.

49. OUTLINE DRAWINGS

PS319

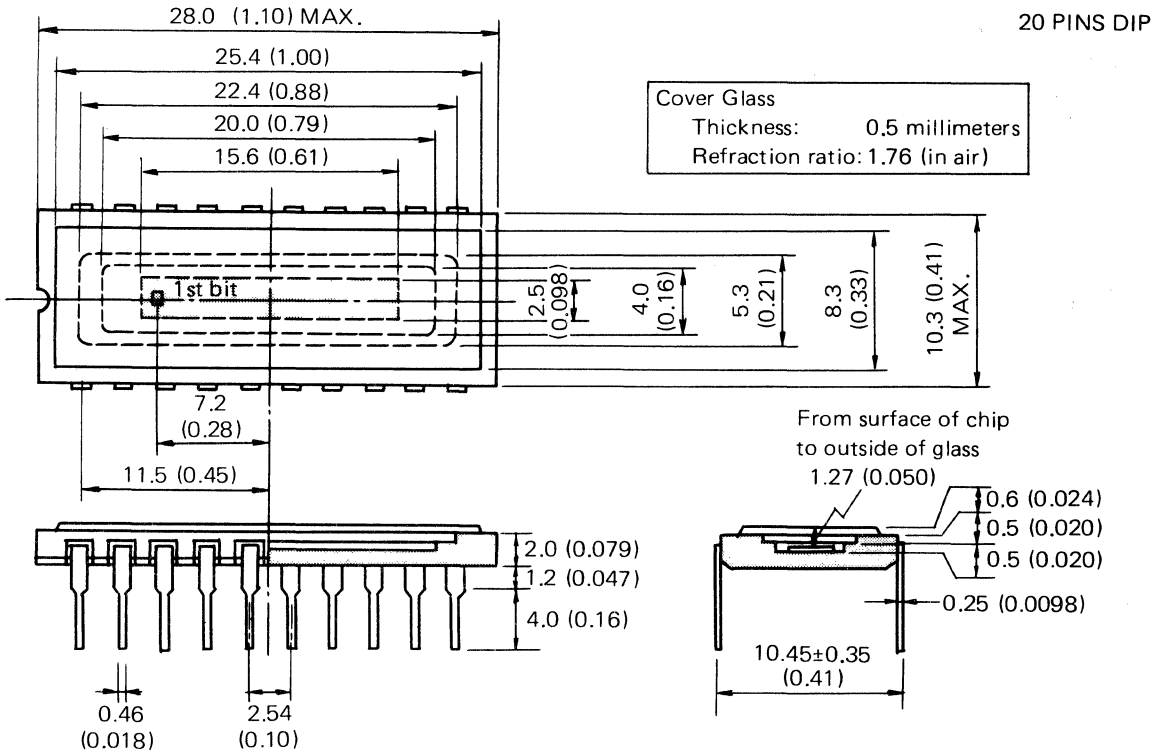

PS320

PACKAGE DIMENSIONS

Unit : in millimeters (inches)

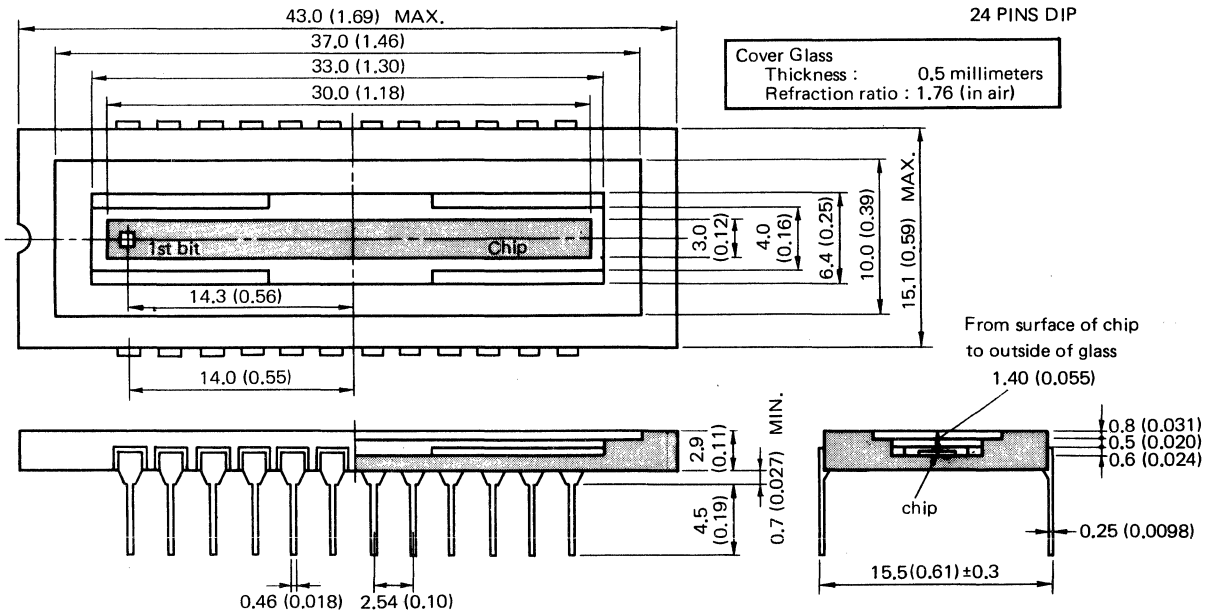

ORDER PART NUMBER μPD799DH If your keyboard has no μ letter, you can use U instead of μ.

49. OUTLINE DRAWINGS

PS321

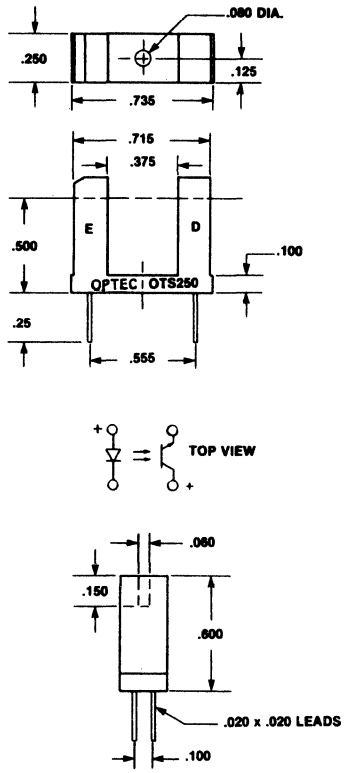

PS322

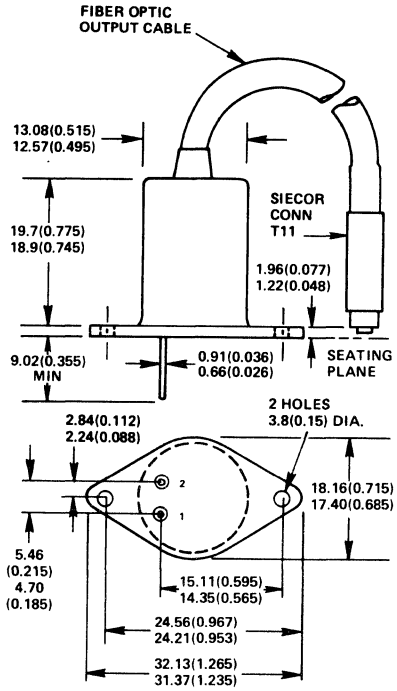

PS323

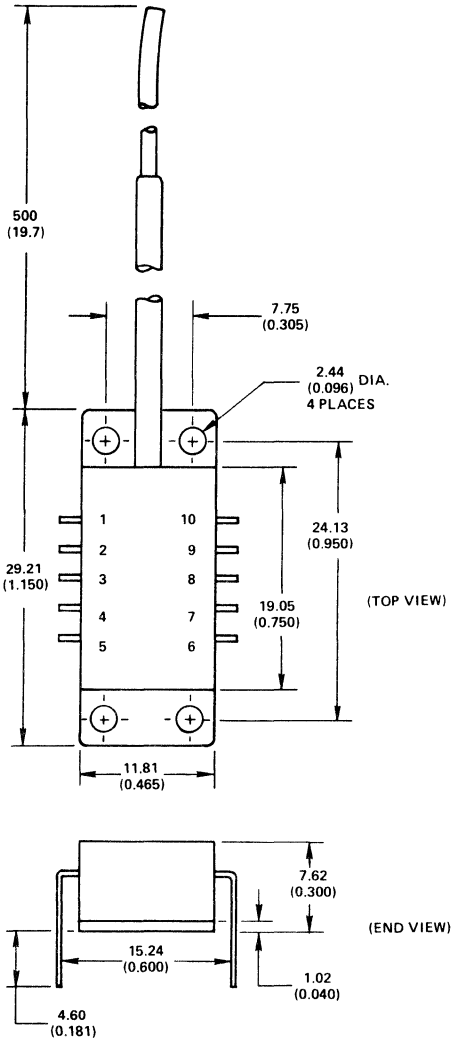

PS325a

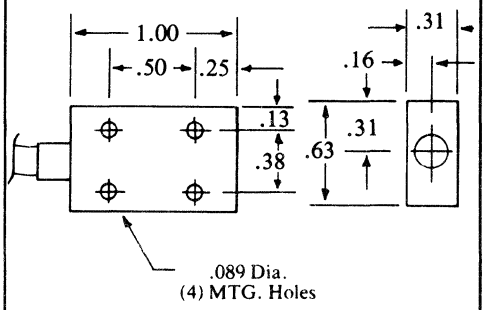

PS325b

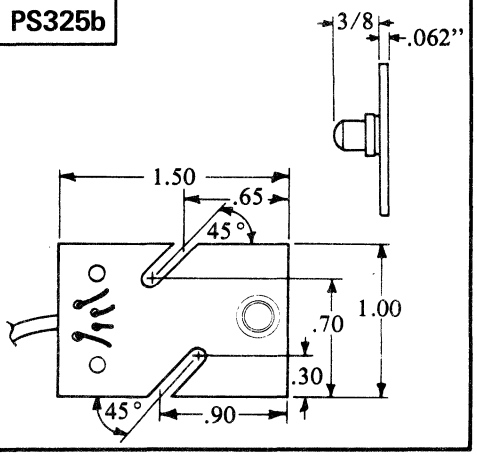

49. OUTLINE DRAWINGS

PS333

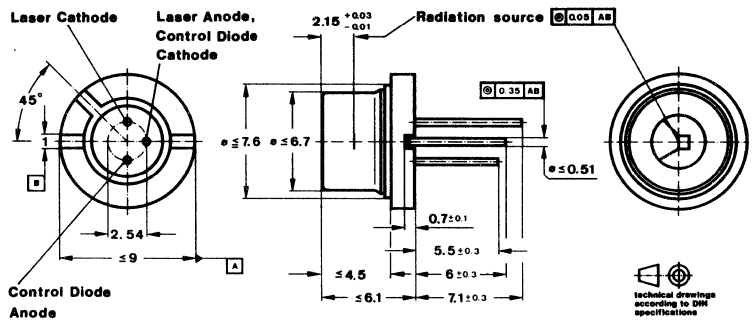

PS334

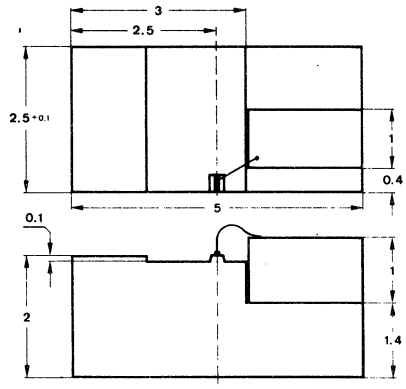

PS335

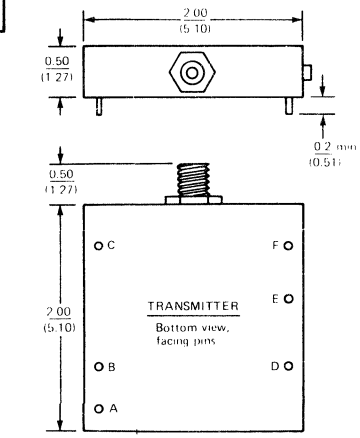

Dimensions in inches (cm)
Tolerances: ±0.01 (0.025)

TRANSMITTER

PIN	FUNCTION
A	V In
B	V Ref
C	FM Out
D	NC
E	Gnd
F	$+V_{CC}$

Note: Distance between two (2) rows of pins is 2.20.

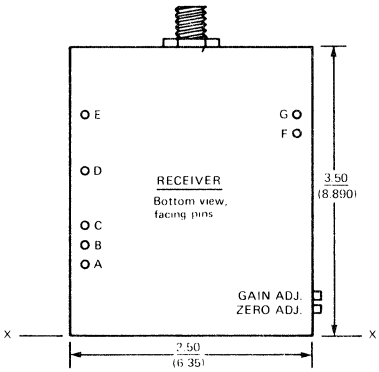

RECEIVER

PIN	FUNCTION	FROM XX
A	−15V	.95
B	Common	1.15
C	+15V	1.35
D	FM In	2.15
E	Channel Select	2.75
F	Analog Out	2.55
G	Analog Gnd	2.75

OPTICAL CONNECTORS: Amphenol 905-135-5000.
For alternate connectors, please consult DMC.

PS336

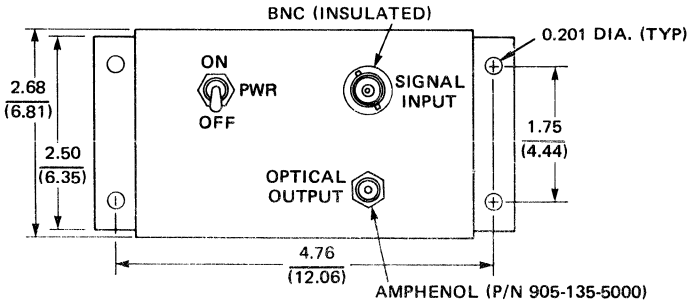

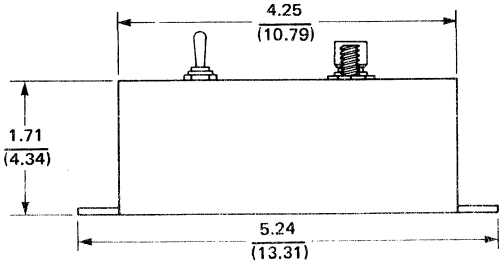

49. OUTLINE DRAWINGS

PS337

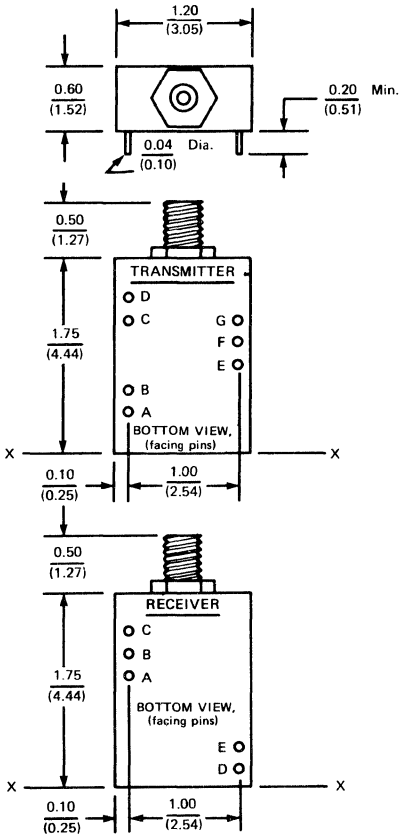

Dimensions in inches (cm)
Tolerances: ±0.01 (0.025)

TRANSMITTER

PIN	FUNCTION	FROM XX
A	TTL In	0.40(1.02)
B	Enable	0.60(1.52)
C	+5V	1.20(3.05)
D	Gnd	1.40(3.56)
E	R3	0.80(2.03)
F	R2	1.00(2.54)
G	R1	1.20(3.05)

Dimensions in inches (cm)
Tolerances: ±0.01 (0.025)

RECEIVER

PIN	FUNCTION	FROM XX
A	−15V	1.00(2.54)
B	+5V	1.20(3.05)
C	Gnd	1.40(3.56)
D	Output ($\overline{Q}$)	0.20(0.51)
E	Output (Q)	0.40(1.02)

PS338

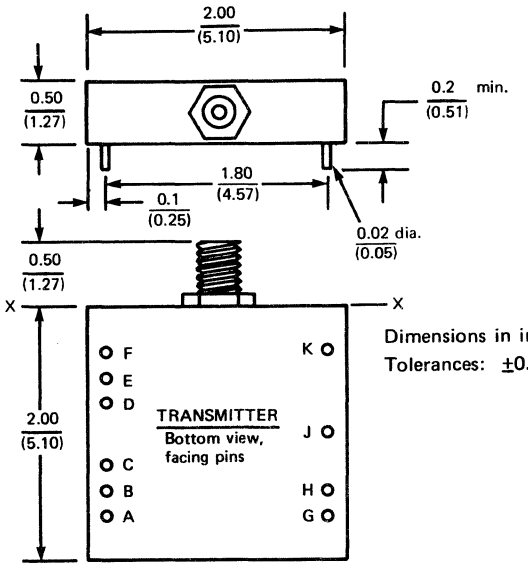

RECEIVER

PIN	FUNCTION	FROM XX
A	−15V	.80 (2.03)
B	+5V	.60 (1.52)
C	Common	.40 (1.02)
D	Out	1.40 (3.56)

Dimensions in inches (cm)
Tolerances: ±0.01 (0.025)

TRANSMITTER

PIN	FUNCTION	FROM XX
A	Ref Out	1.70 (4.32)
B	Ref In	1.50 (3.81)
C	Vos	1.30 (3.30)
D	−15V	.80 (2.03)
E	Common	.60 (1.52)
F	+15V	.40 (1.02)
G	V Ref	1.70 (4.32)
H	V In	1.50 (3.81)
J	TTL Out	1.10 (2.79)
K	+5V	.40 (1.02)

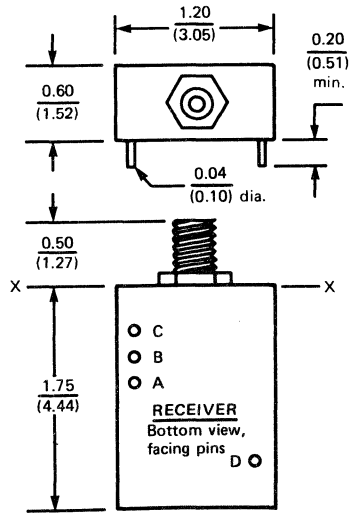

49. OUTLINE DRAWINGS

PS339

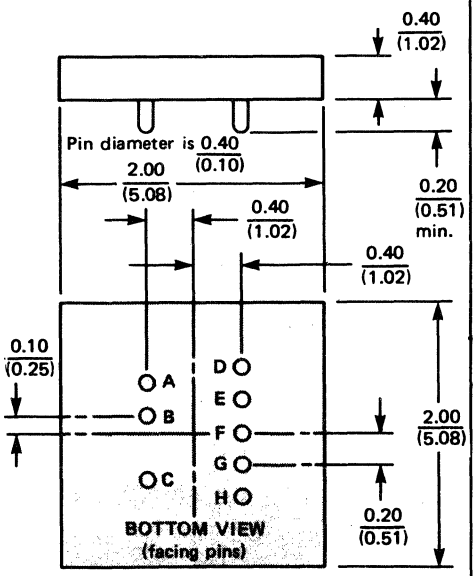

PS340

TRANSMITTER

PIN	FUNCTION	FROM XX
A	NC	0.30
B	Frequency Out	1.70
C	NC	2.30
D	NC	2.70
E	NC	0.30
F	Analog In	0.70
G	Analog Ref.	0.90
H	−15V	1.90
J	Common	2.10
K	+15V	2.30
L	NC	2.70

RECEIVER

PIN	FUNCTION	FROM XX
A	−15V	0.50
B	Common	0.70
C	+15V	0.90
D	CMOS In	1.70
E	Channel Select	1.90
G	Analog Out	2.10
H	Analog Gnd	2.30

Dimensions in inches (cm)
Tolerances: ± 0.01 (0.025)

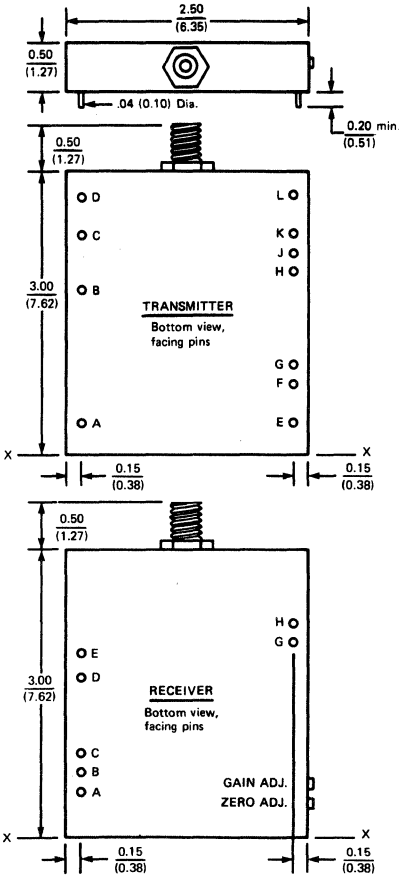

PS341

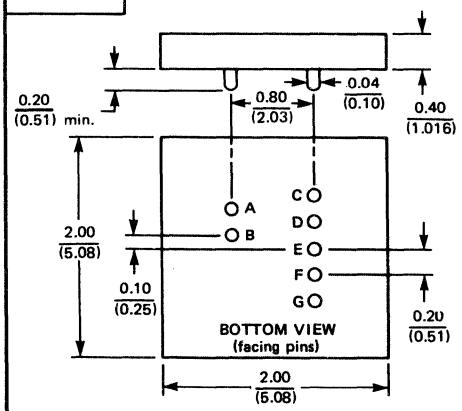

PS342

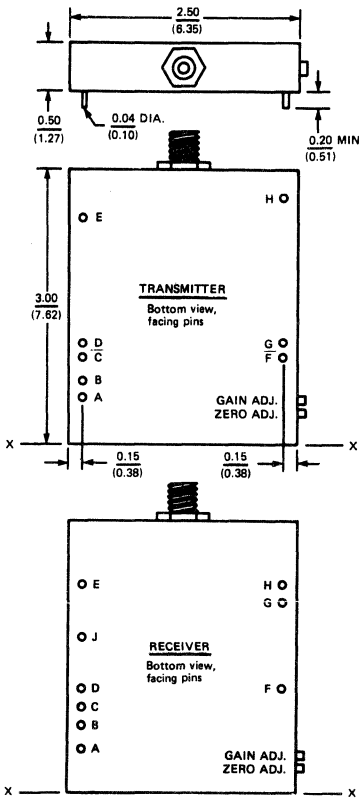

TRANSMITTER

PIN	FUNCTION	FROM XX
A	−15V	0.50
B	COM	0.70
C	+15V	0.90
D	+5V	1.10
E	TTL Out	2.50
F	Analog In	0.90
G	Analog Ref	1.10
H	(Open)	2.70

RECEIVER

PIN	FUNCTION	FROM XX
A	−15V	0.50
B	COM	0.70
C	+15V	0.90
D	+5V	1.10
E	Channel Select	2.30
F	(Open)	1.10
G	Analog Gnd	2.10
H	Analog Out	2.30
J	Frequency Input	1.70

Dimensions in inches (cm)
Tolerances: ± 0.01 (0.025)

49. OUTLINE DRAWINGS

PS343

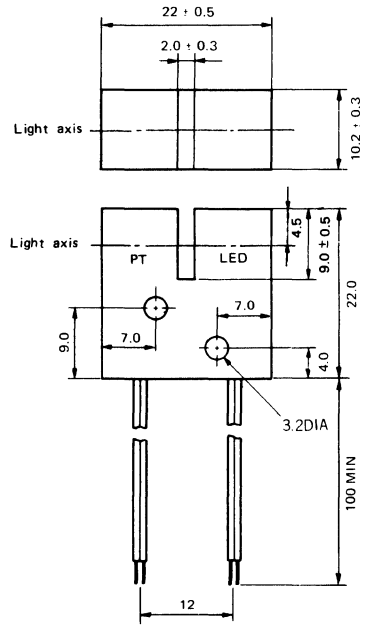

PS344

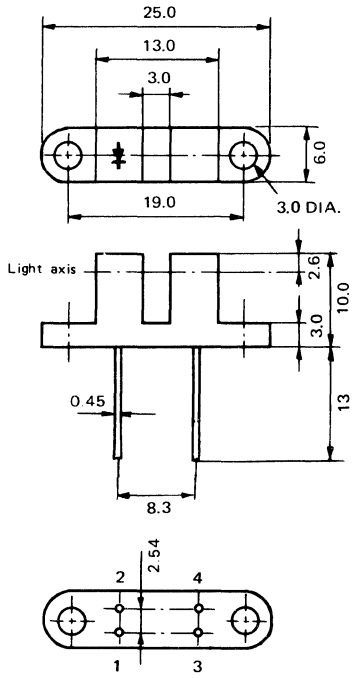

PS345

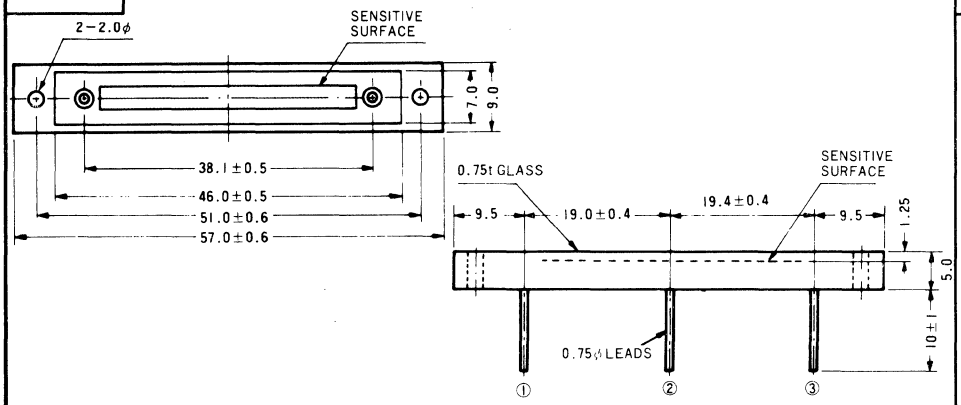

PS346

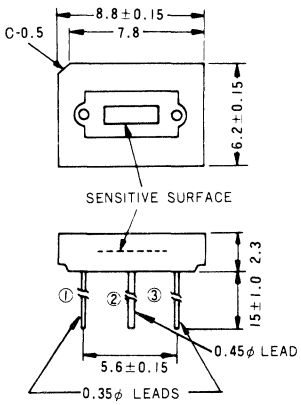

PS347

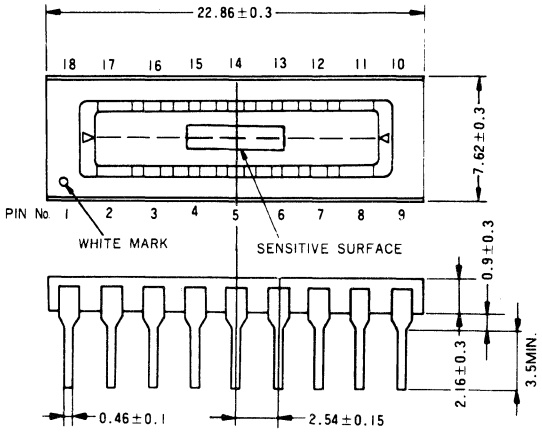

PS348

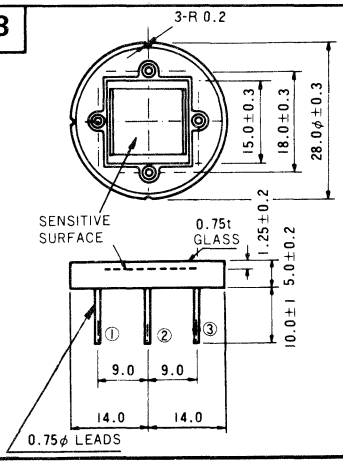

49. OUTLINE DRAWINGS

PS349

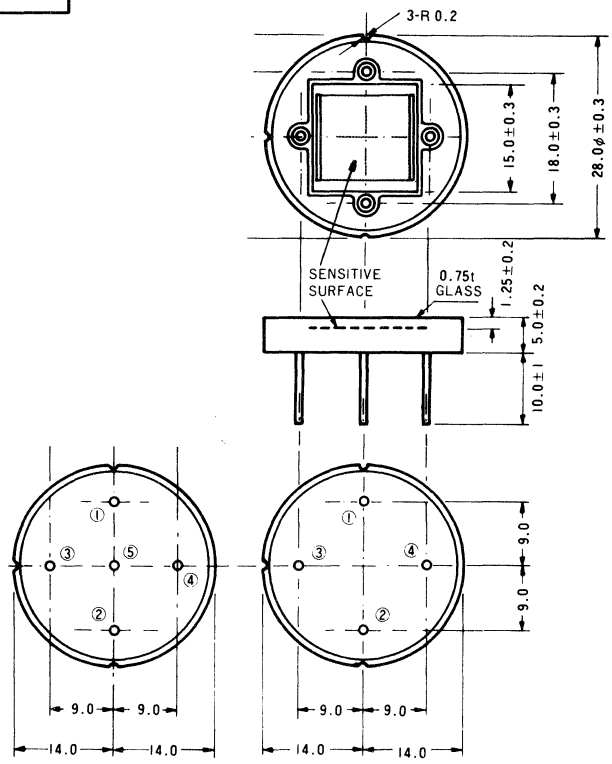

PS351

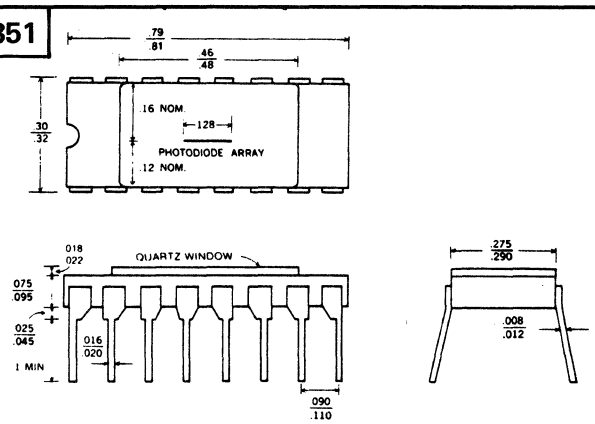

PS354

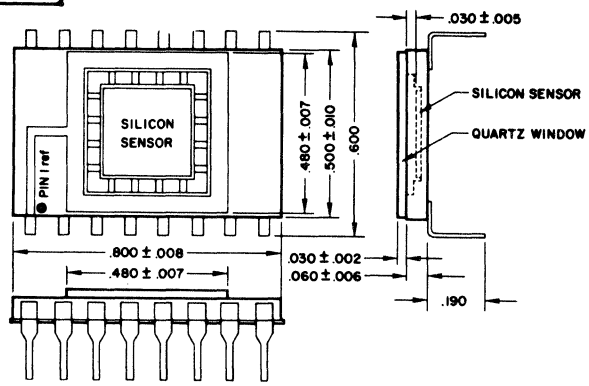

PS326

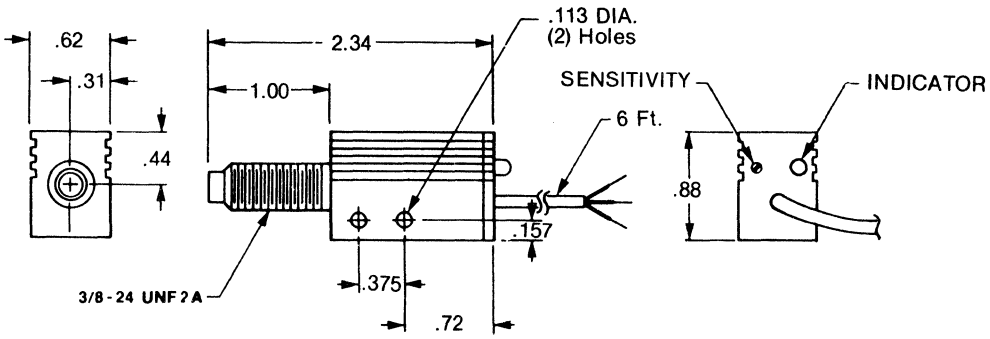

PS355

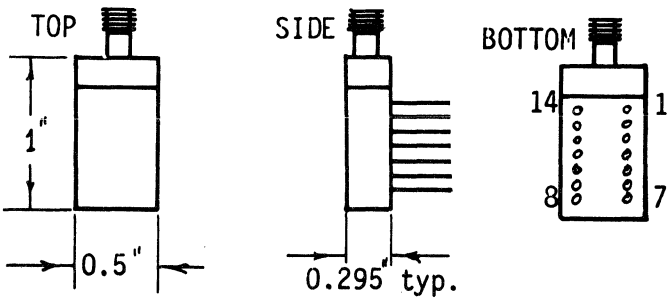

PS356

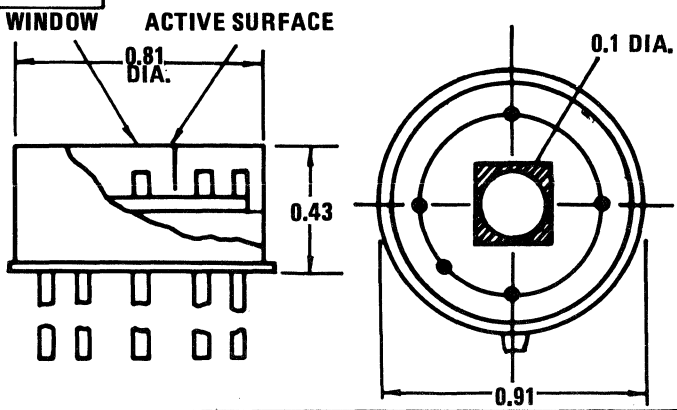

49. OUTLINE DRAWINGS

PS357

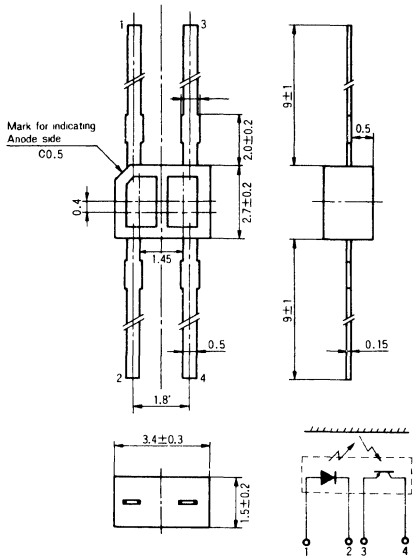

PS358

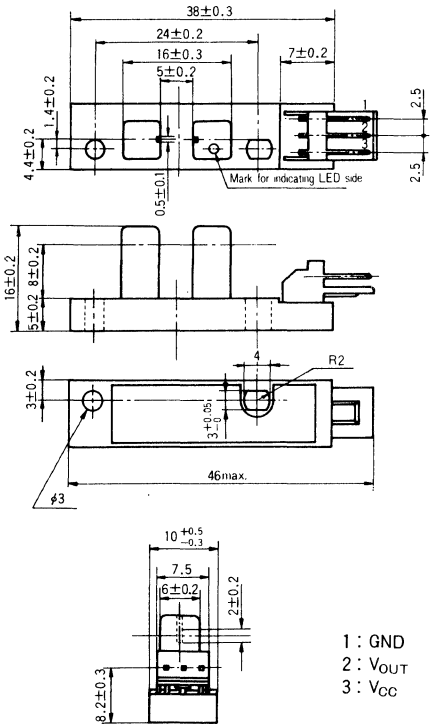

PS359

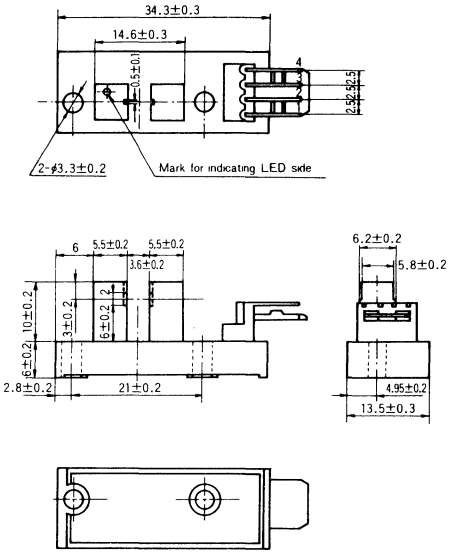

PS360

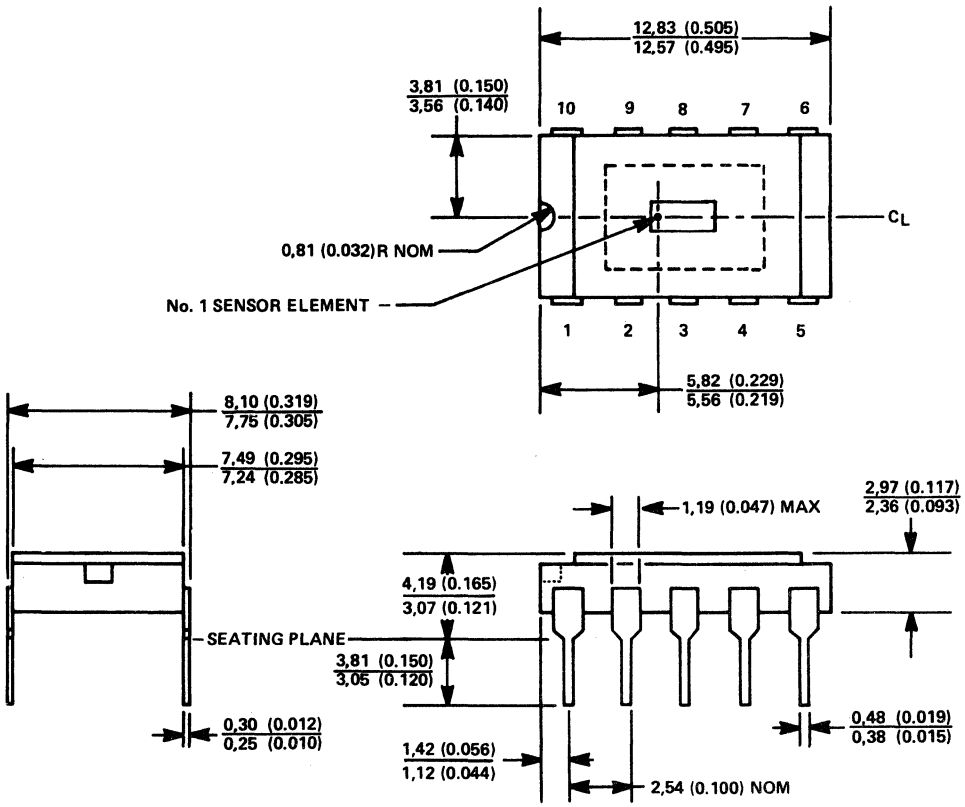

49. OUTLINE DRAWINGS

PS361

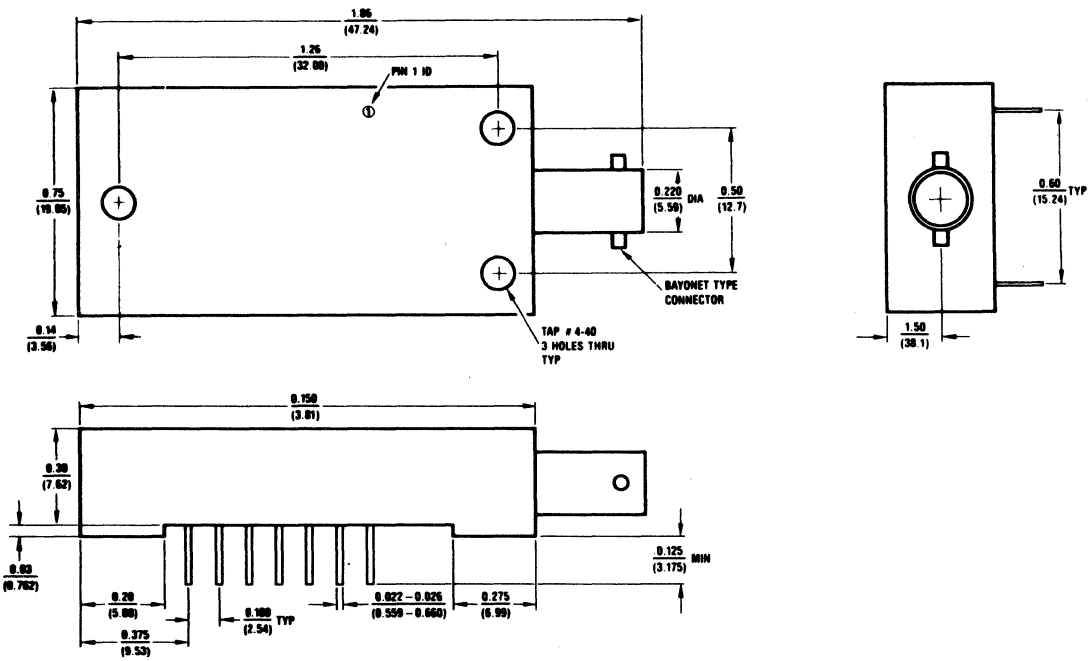

PS362

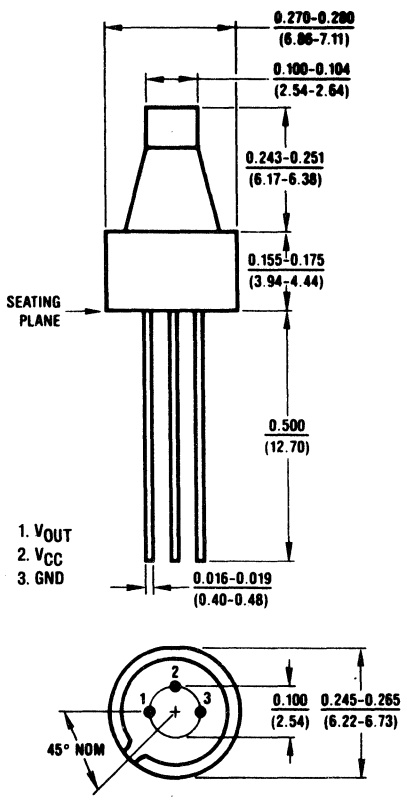

PS363

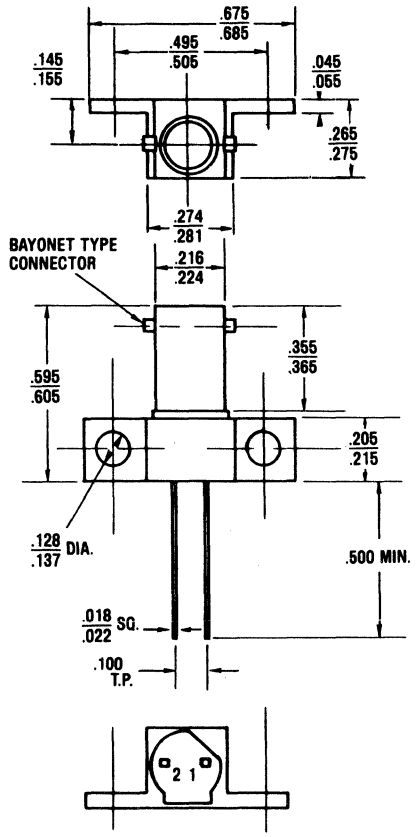

PS365

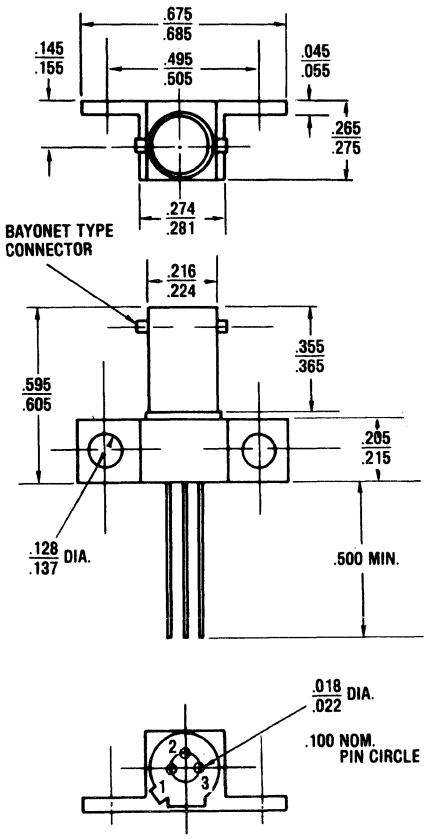

49. OUTLINE DRAWINGS

PS366a

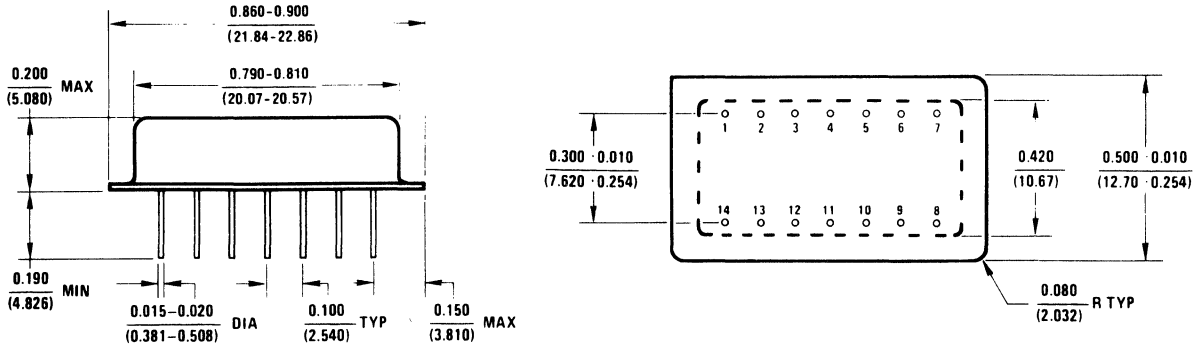

PS366

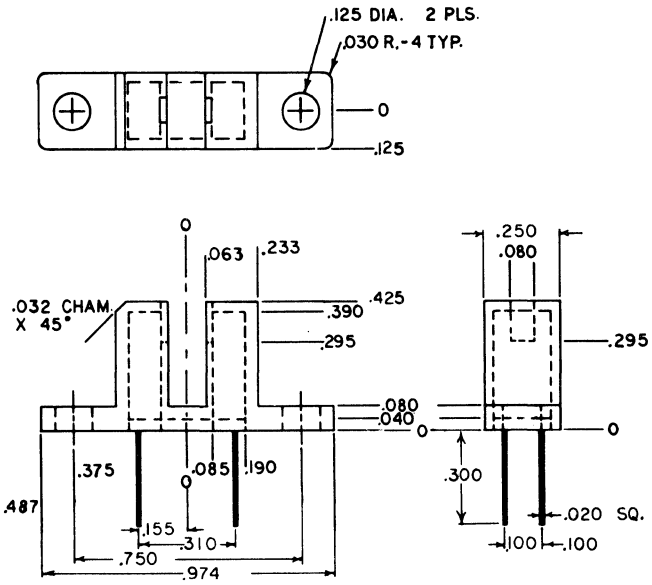

PS368

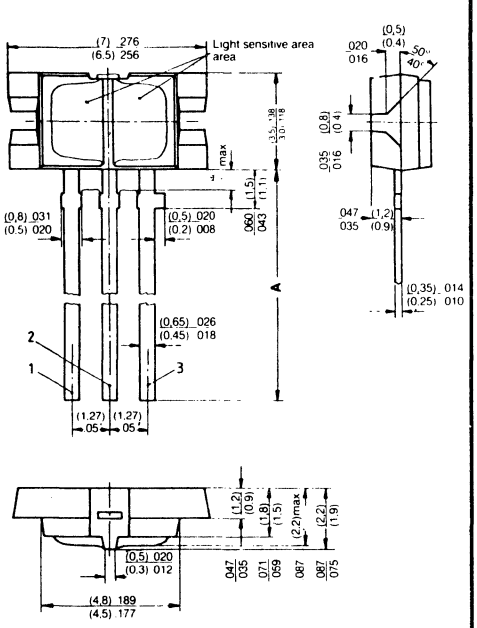

	A
PS368	(5.2) .205 (5.6) .220
PS368a	(13.3) .524 (14.3) .563
PS368b	(13.3) (.524) (14.3) (.563)

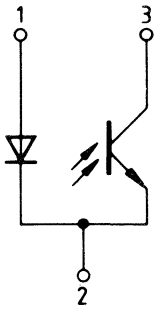

PS367

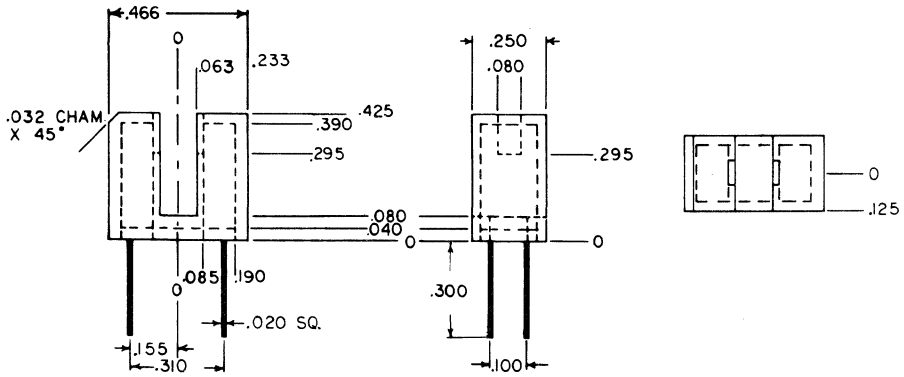

49. OUTLINE DRAWINGS

PS369

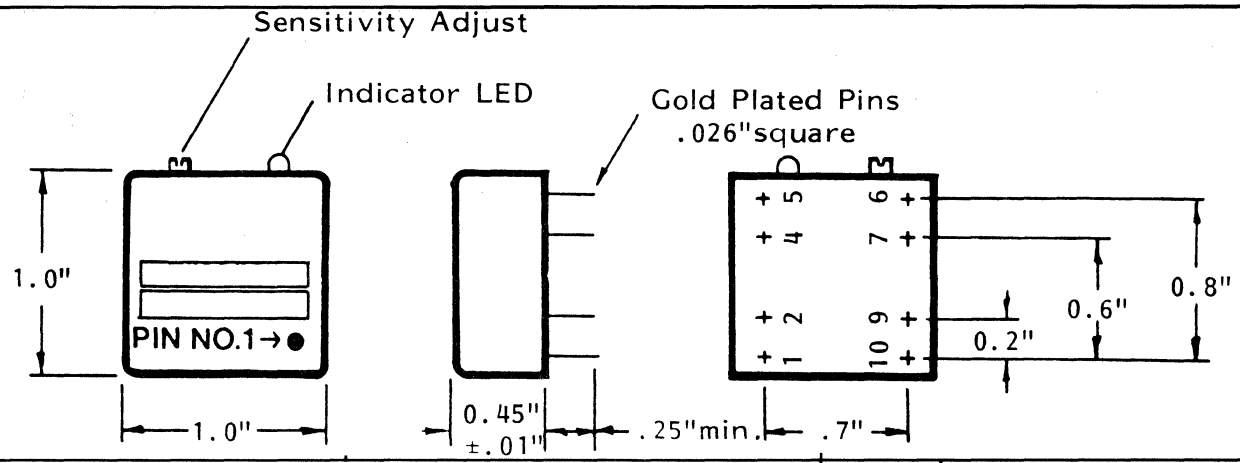

PS375

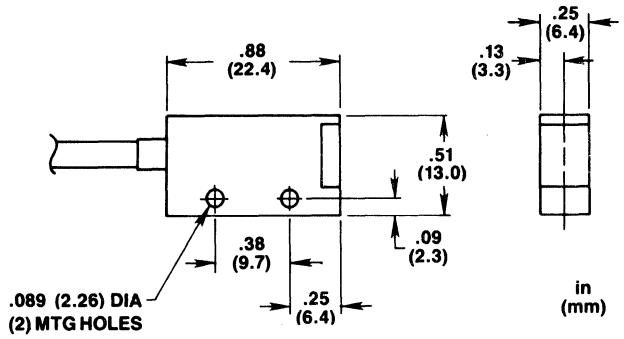

PS387

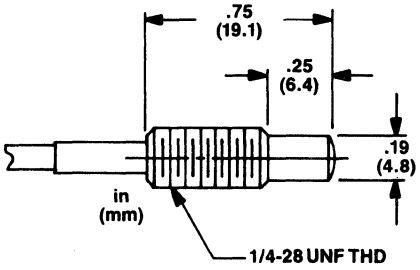

PS387a

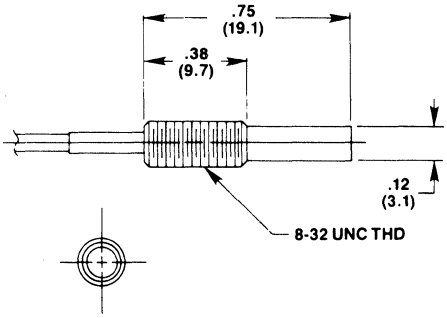

PS377

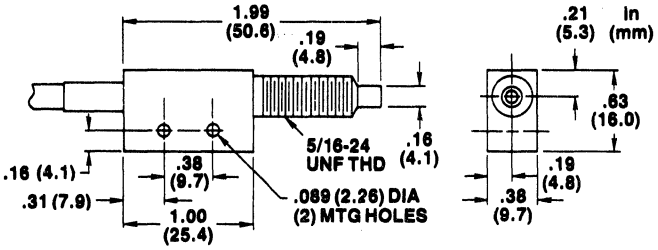

PS377a

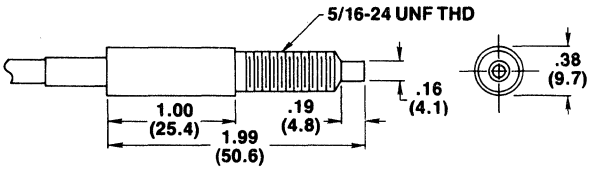

PS377b

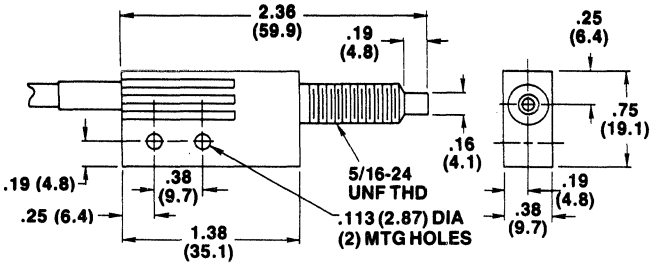

PS377c

49. OUTLINE DRAWINGS

PS384

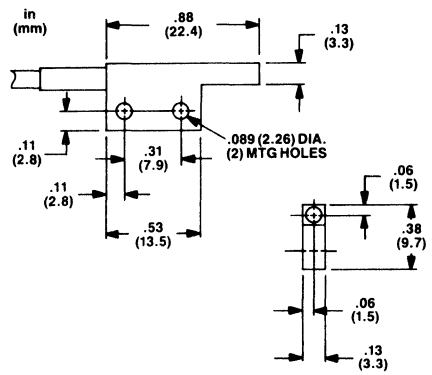

PS376

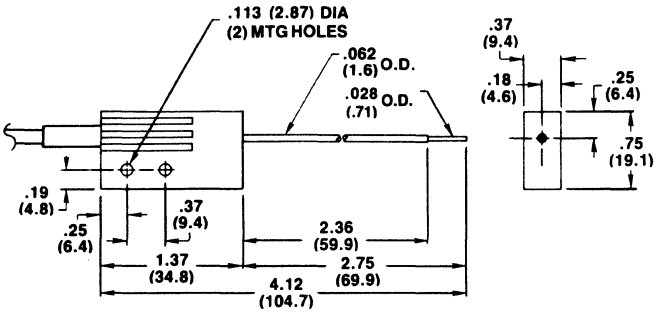

PS378

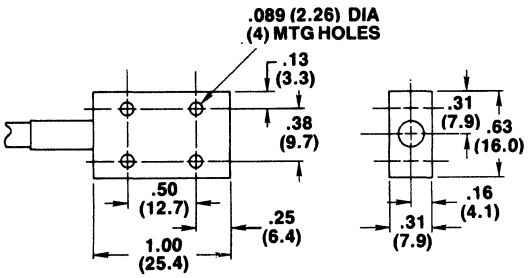

PS385

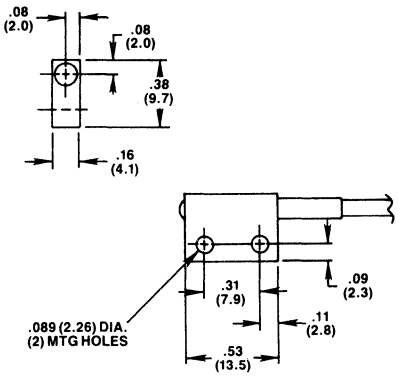

PS386

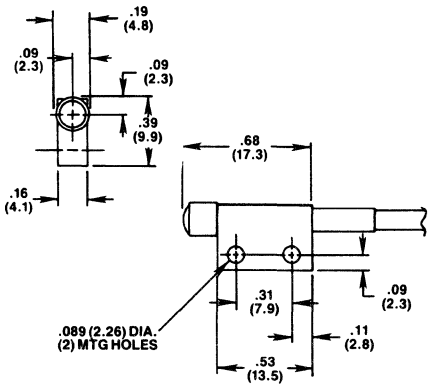

PS379

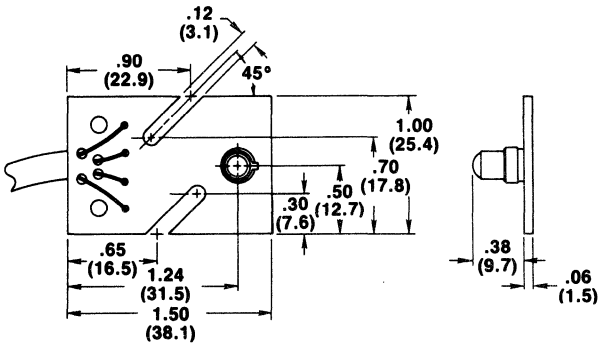

49. OUTLINE DRAWINGS

PS380

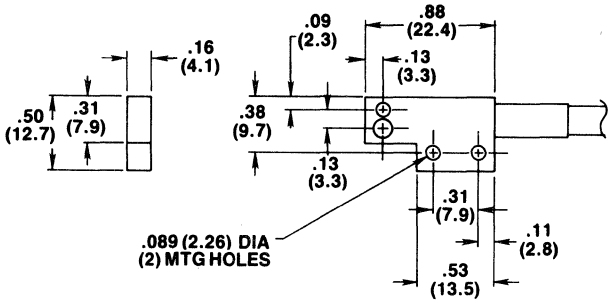

PS380a

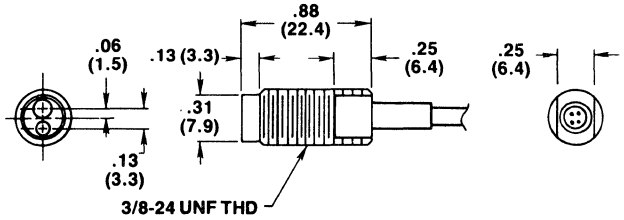

PS380b

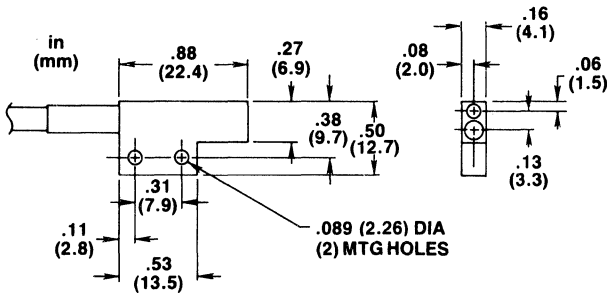

PS380c

PS383

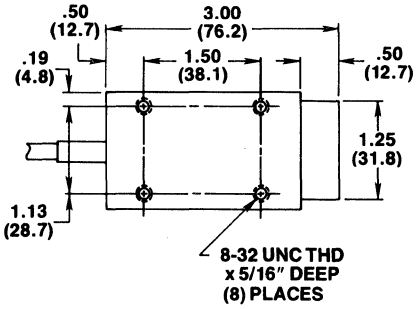

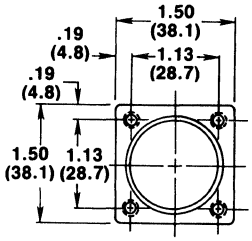

in
(mm)

PS381

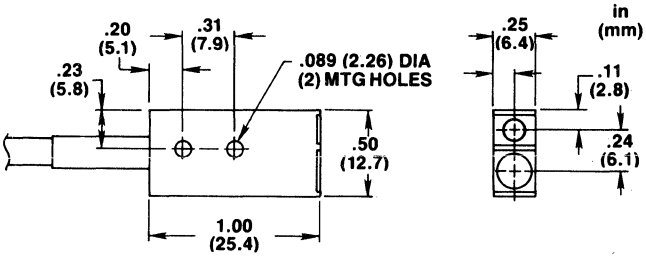

Units are dimensionally identical

49. OUTLINE DRAWINGS

PS382

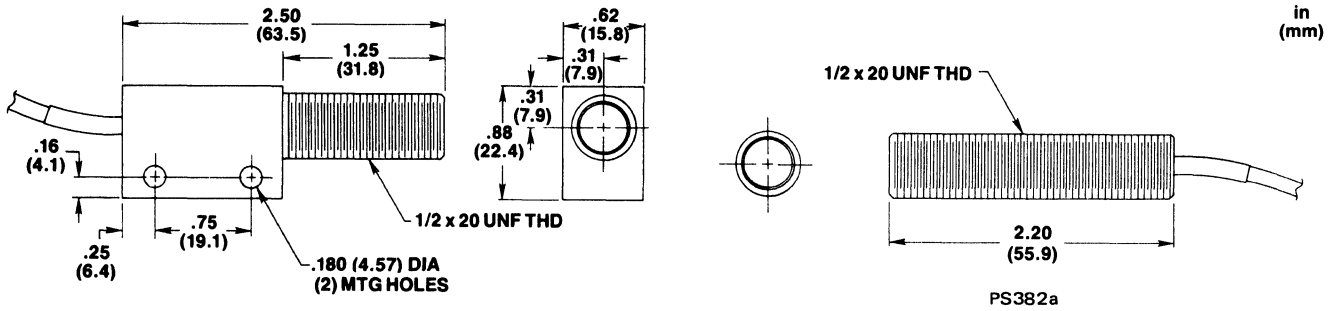

PS382a

PS388

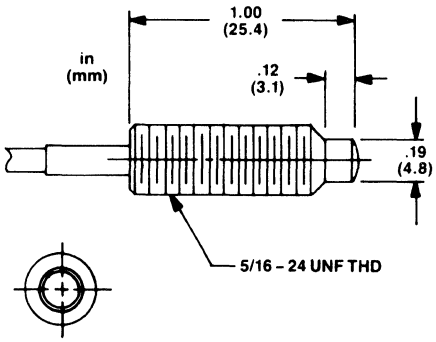

PS389

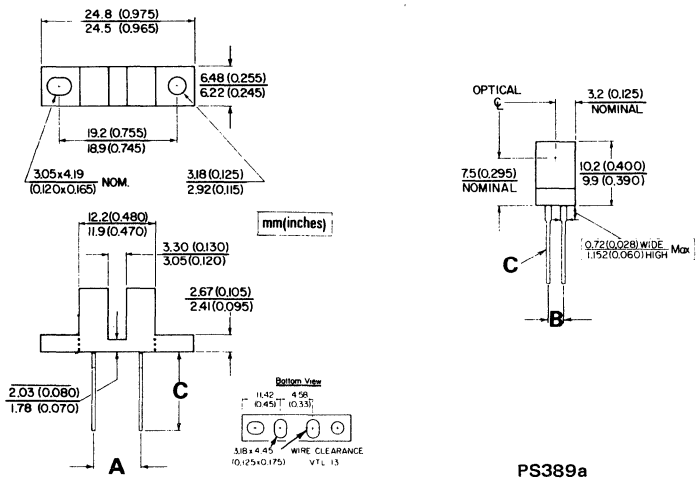

PS389a

PS389a ONLY

Aperture Variations
At end of type Number:
-5 5mil Aperture
-10 10mil Aperture
-20 20mil Aperture

Package Variations		
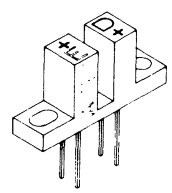	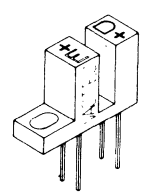	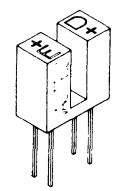
STANDARD NO LETTER SUFFIX	SINGLE MTG FLANGE LETTER SUFFIX A	NO FLANGE PC MOUNT LETTER SUFFIX B

PS391

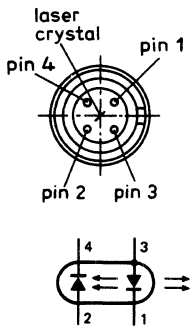

PS391a

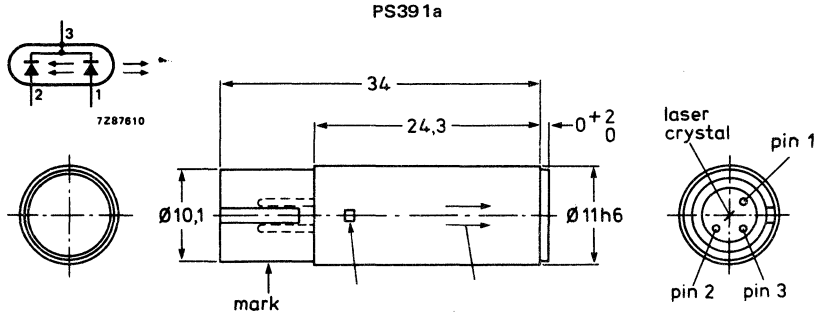

49. OUTLINE DRAWINGS

PS392

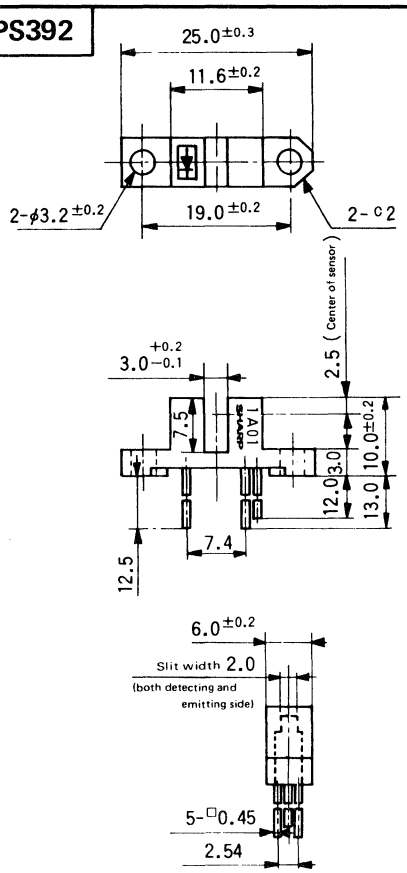

PS390

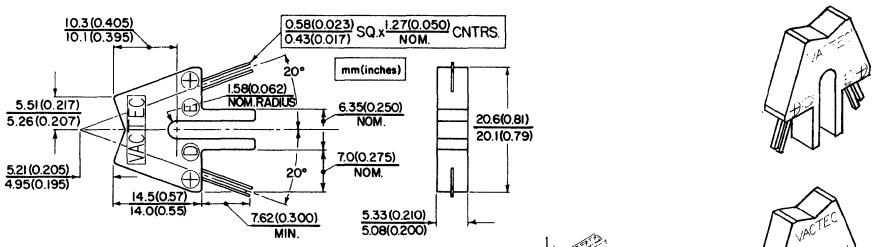

PS390: Printed Circuit Board Mount

PS390a: with 12 inch AWG-26 leads

PS390b: with 12 inch AWG-26 leads and 4 Pin Connector

PS398

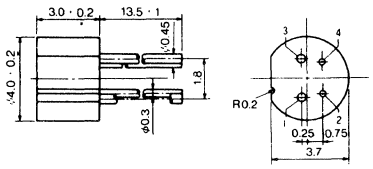

PS399

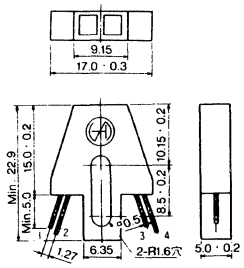

PS400

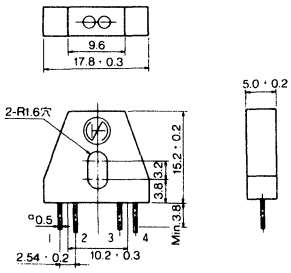

PS401

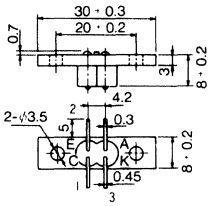

PS402

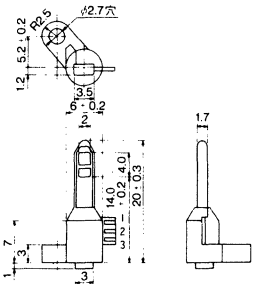

PS403

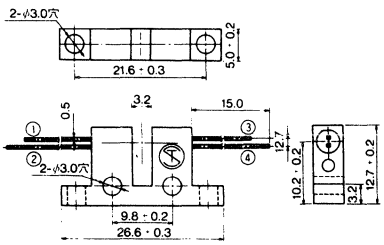

PS404

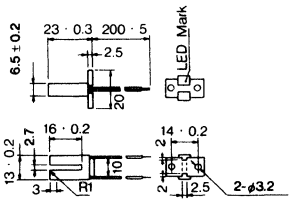

PS405

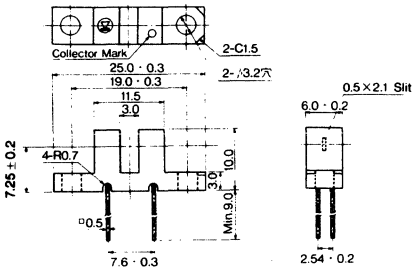

49. OUTLINE DRAWINGS

PS406

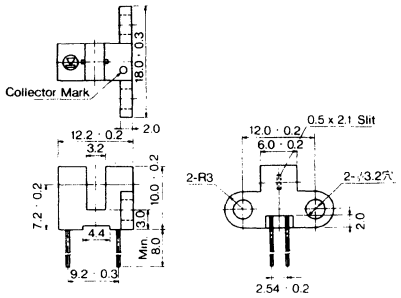

PS407

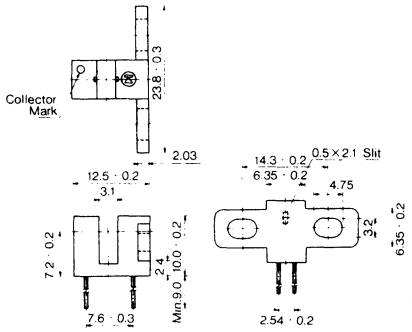

PS408

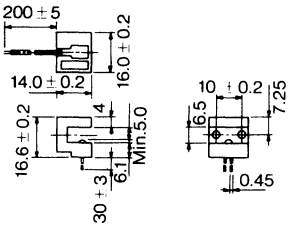

PS409

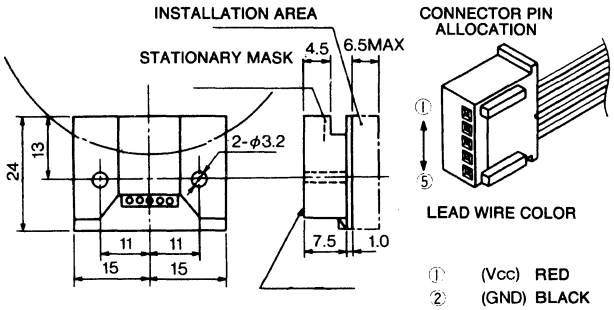

LEAD WIRE COLOR

①	(Vcc)	RED
②	(GND)	BLACK
③	(A)	YELLOW
④	(B)	BLUE
⑤	(Z	ORANGE

PS410

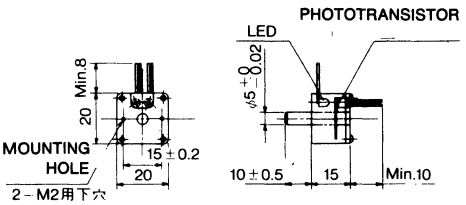

(USE SELF TAPPING SCREW)

PS411

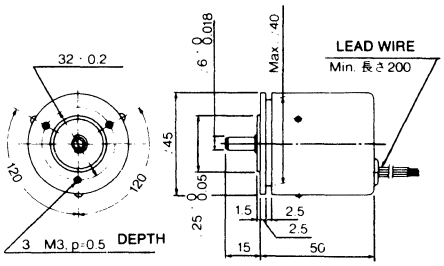

PS412

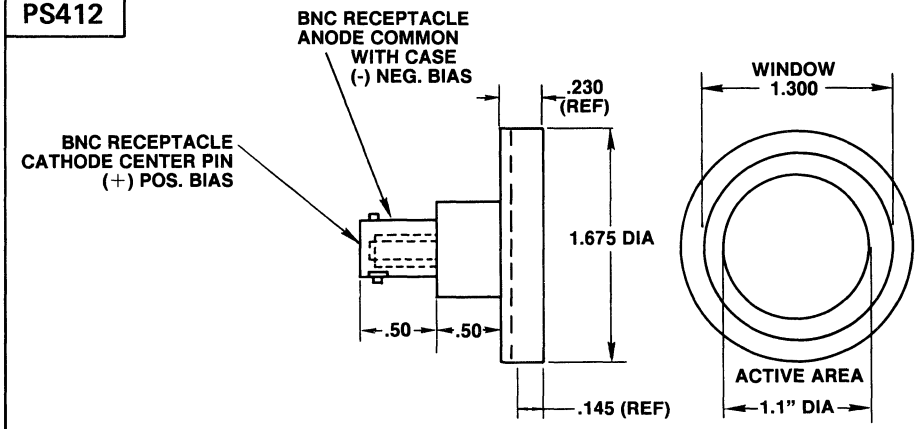

PS414

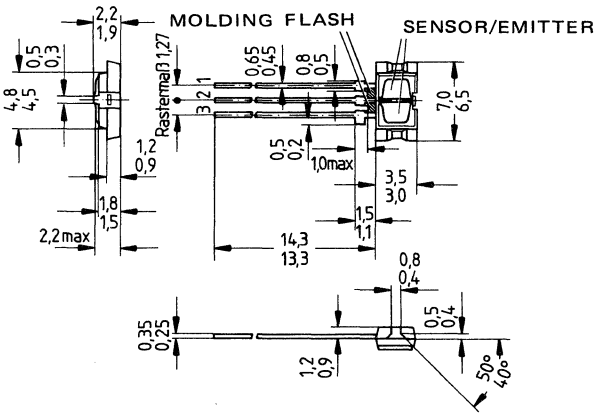

49. OUTLINE DRAWINGS

PS415

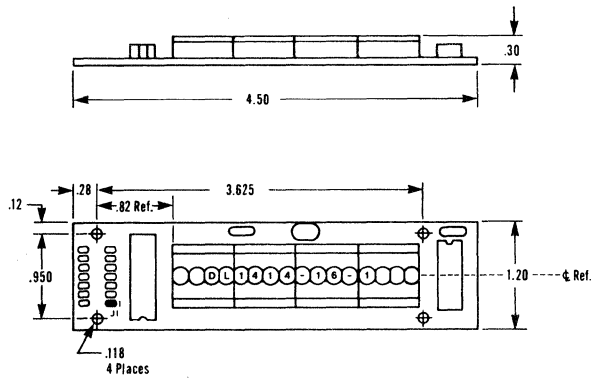

PS416

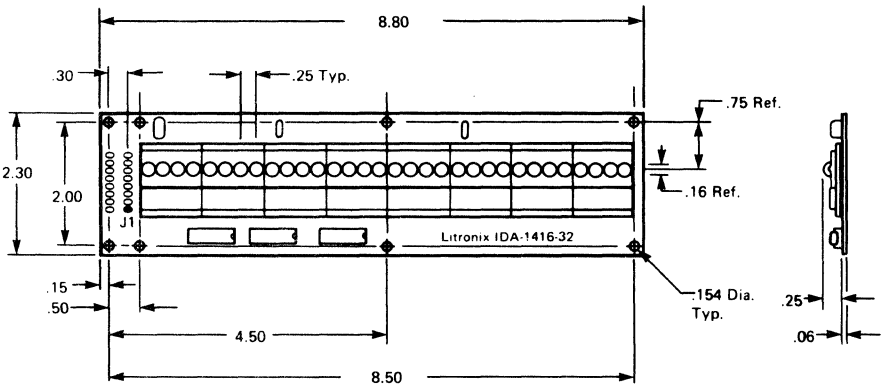

PS417

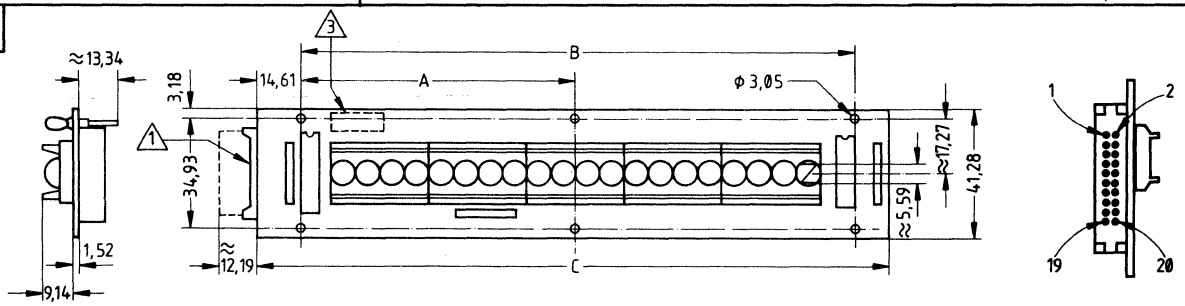

Dimensions in mm

Dwg. No.	A	B	C
PS417	76.20	152.40	176.53
PS417a	92.71	185.42	209.55

PS418

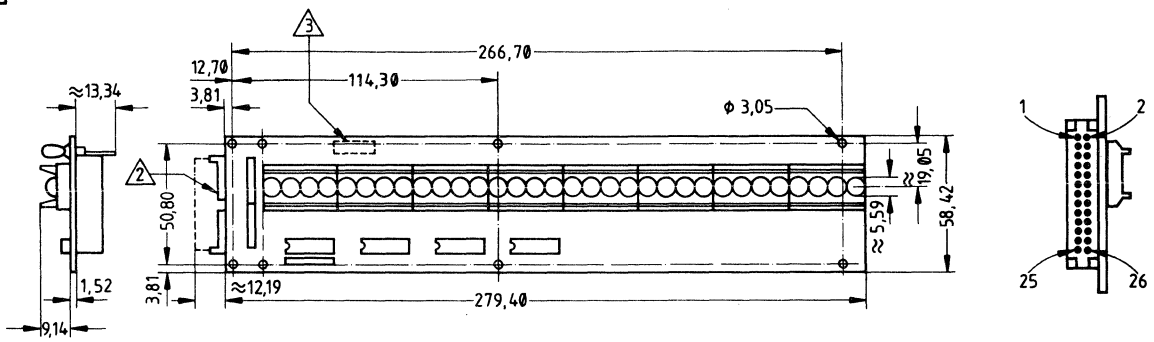

49. OUTLINE DRAWINGS

PS419

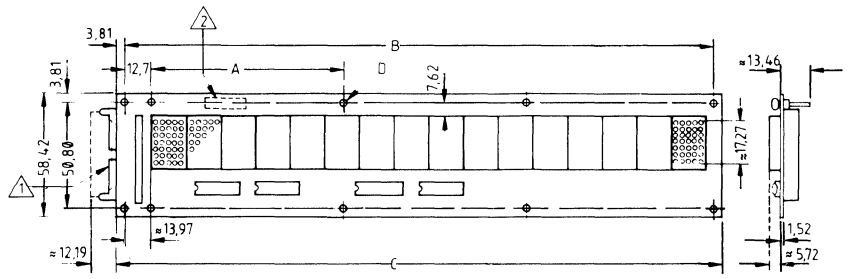

A	B	C	D
typ. 96.52	302.26	306.07	10 places typ. 3.05
typ. 90.17	373.38	377.19	12 places typ. 3.94

PS421

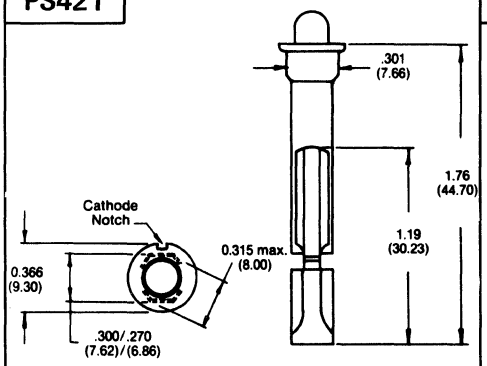

PS422

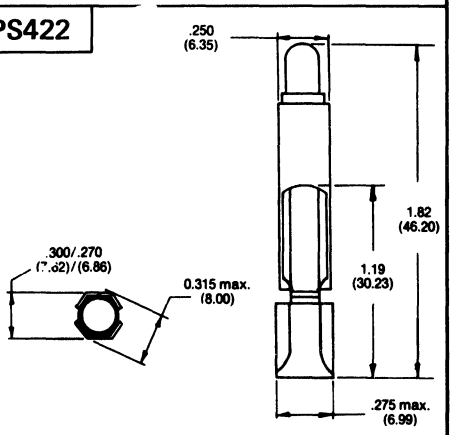

PS424

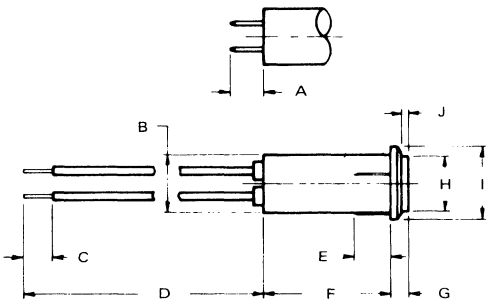

	A	B	C	D	E	F	G	H	I	J
PS424	.280	.368	.25	6.0	.30	.970	.160	.360	.520	.060
PS424a	.28	.490	.25	6.0	.30	1.08	.16	.462	.62	.06

PS426

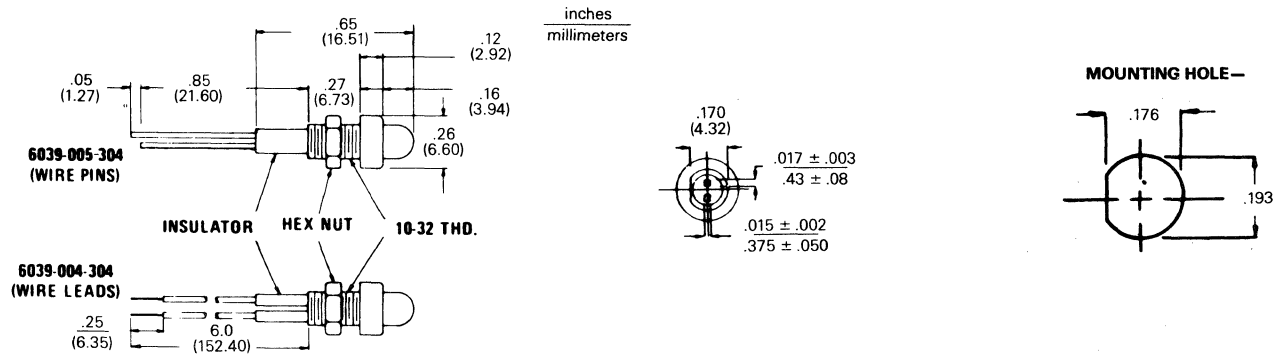

49. OUTLINE DRAWINGS

PS425

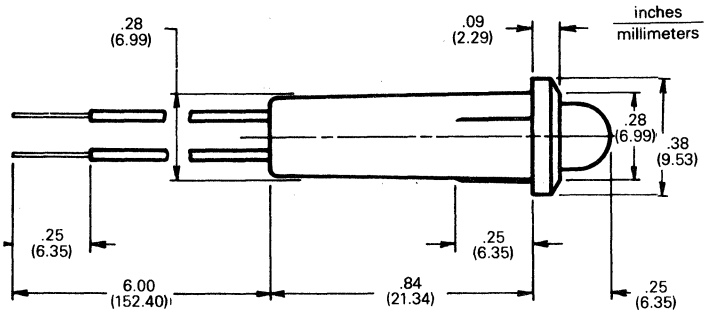

PS428

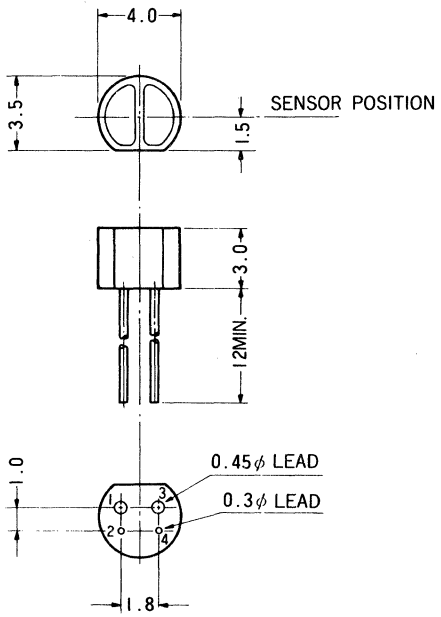

PS429

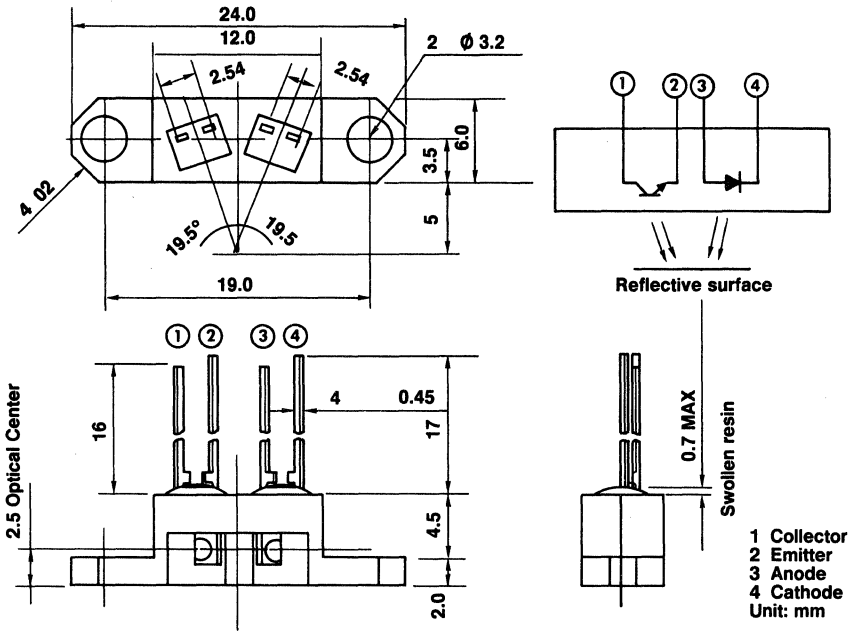

PS430

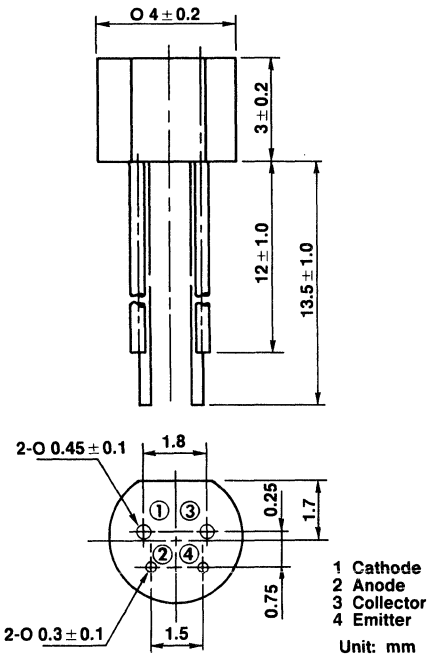

PS431

Dimensions in mm

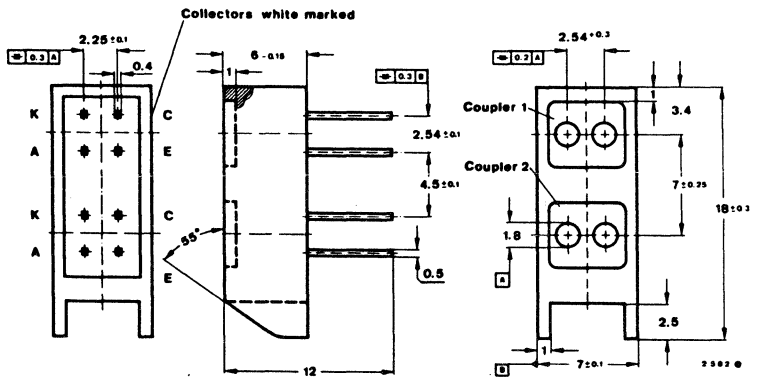

49. OUTLINE DRAWINGS

PS432

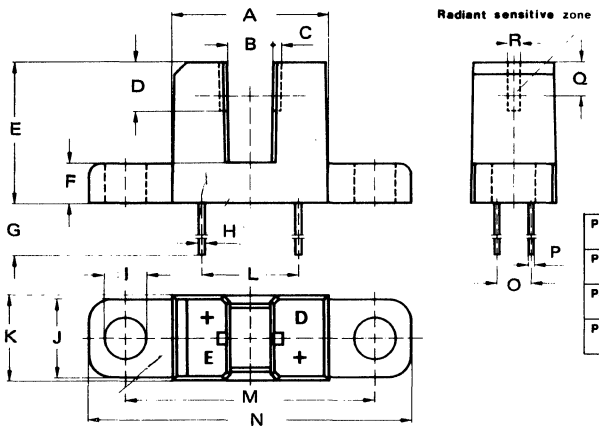

Dimensions in m.m.

	A	B	C	D	E	F	G	H	I	J	K	L	M	N	O	P	Q	R
PS432	11.8/12.0	3.0/3.3	0.6	3.8	10.7/10.9	3.1	7.0	0.5	3.3	5.9/6.1	6.2/6.4	7.6	18.85/19.15	24.35/24.65	2.54	0.4	2.6	1.00
PS432a	11.8/12.0	3.0/3.3	0.6	3.8	10.7/10.9	3.1	7.0	0.5	3.3	5.9/6.1	6.2/6.4	7.6	18.85/19.15	24.35/24.65	2.54	0.4	2.6	.50
PS432b	11.8/12.0	3.0/3.3	0.6	3.8	10.7/10.9	3.1	7.0	0.5	3.3	5.9/6.1	6.2/6.4	7.6	18.85/19.15	24.35/24.65	2.54	0.4	2.6	.25
PS432c	12.35/12.65	3.0/3.3			9.95/10.25	2.5/2.7	8.6 MIN	0.4	3.3	5.85/6.15	6.15/6.45	5.5	18.90/19.20	24.4/24.8	2.54	.45	3.0	

PS433

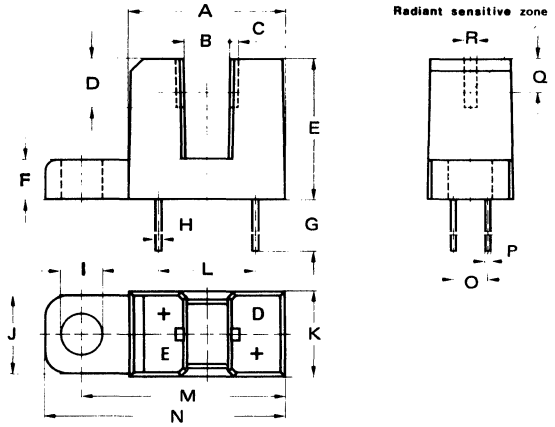

Dimensions in m.m.

	A	B	C	D	E	F	G	H	I	J	K	L	M	N	O	P	Q	R
PS433	11.8/12.0	3.0/3.3	0.6	3.8	10.7/10.9	3.1	7.0	0.5	3.3	5.9/6.1	6.2/6.4	7.6	15.30/15.60	18.05/18.35	2.54	0.4	2.6	1.00
PS433a	11.8/12.0	3.0/3.3	0.6	3.8	10.7/10.9	3.1	7.0	0.5	3.3	5.9/6.1	6.2/6.4	7.6	15.30/15.60	18.05/18.35	2.54	0.4	2.6	.50
PS433b	11.8/12.0	3.0/3.3	0.6	3.8	10.7/10.9	3.1	7.0	0.5	3.3	5.9/6.1	6.2/6.4	7.6	15.30/15.60	18.05/18.35	2.54	0.4	2.6	.25
PS433c	12.35/12.65	3.0/3.3			9.95/10.25	2.5/2.7	8.6 MIN	0.4	3.3	5.85/6.15	6.15/6.45	5.5		18.3/18.7	2.54	.45	2.5/3.5	

PS434

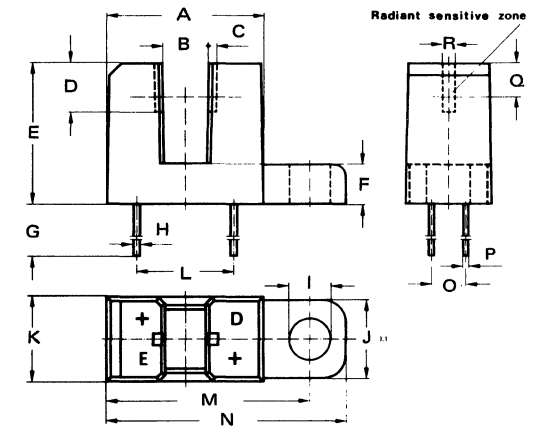

Dimensions in m.m.

	A	B	C	D	E	F	G	H	I	J	K	L	M	N	O	P	Q	R
PS434	11.8/12.0	3.0/3.3	0.6	3.8	10.7/10.9	3.1	7.0	0.5	3.3	5.9/6.1	6.2/6.4	7.6	15.30/15.60	18.05/18.35	2.54	0.4	2.6	1.00
PS434a	11.8/12.0	3.0/3.3	0.6	3.8	10.7/10.9	3.1	7.0	0.5	3.3	5.9/6.1	6.2/6.4	7.6	15.30/15.60	18.05/18.35	2.54	0.4	2.6	.50
PS434b	11.8/12.0	3.0/3.3	0.6	3.8	10.7/10.9	3.1	7.0	0.5	3.3	5.9/6.1	6.2/6.4	7.6	15.30/15.60	18.05/18.35	2.54	0.4	2.6	.25
PS434c	12.35/12.65	3.0/3.3			9.95/10.25	2.5/2.7	8.6 MIN	0.4	3.3	5.85/6.15	6.15/6.45	5.5		18.3/18.7	2.54	.45	2.5/3.5	

PS435

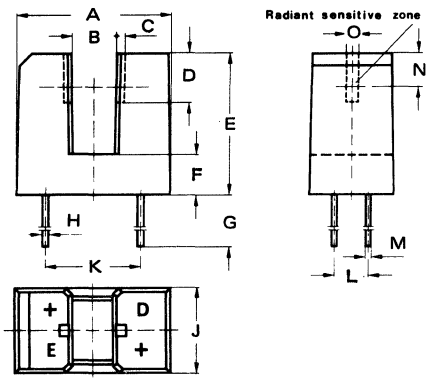

Dimensions in m.m.

	A	B	C	D	E	F	G	H	J	K	L	M	N	O
PS435	11.8/12.0	3.0/3.3	0.6	3.8	10.7/10.9	3.1	7.0	0.5	6.2/6.4	7.6	2.54	0.4	2.6	1.00
PS435a	11.8/12.0	3.0/3.3	0.6	3.8	10.7/10.9	3.1	7.0	0.5	6.2/6.4	7.6	2.54	0.4	2.6	.50
PS435b	11.8/12.0	3.0/3.3	0.6	3.8	10.7/10.9	3.1	7.0	0.5	6.2/6.4	7.6	2.54	0.4	2.6	.25
PS435c	12.35/12.65	3.0/3.3			9.95/10.25	2.0/2.2	8.6 MIN	0.4	6.15/6.45	5.5	2.54	.45	2.5/3.5	

49. OUTLINE DRAWINGS

PS436

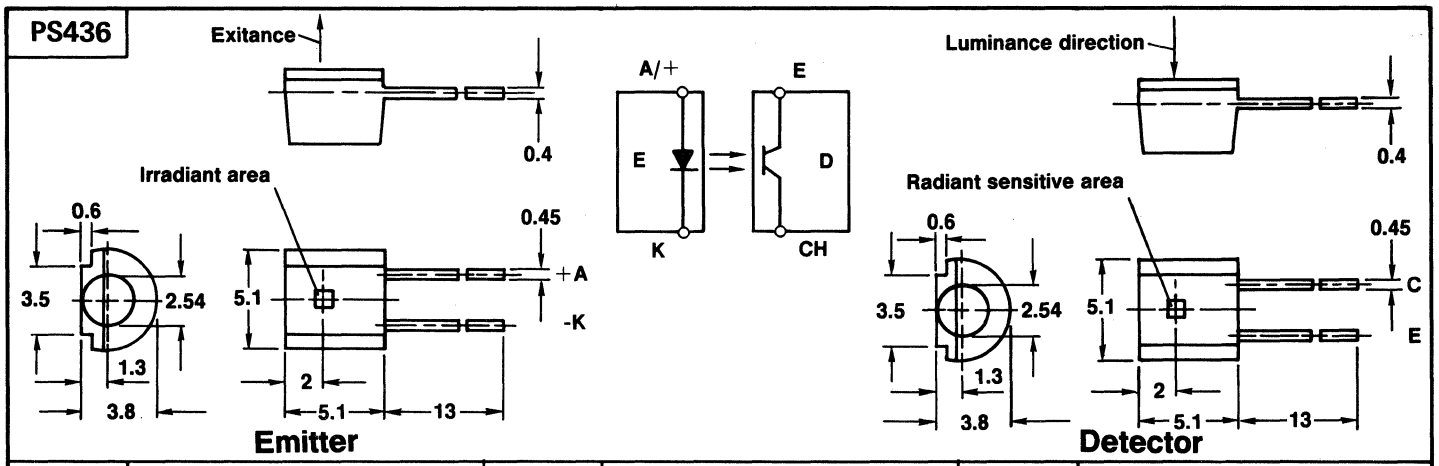

PS437

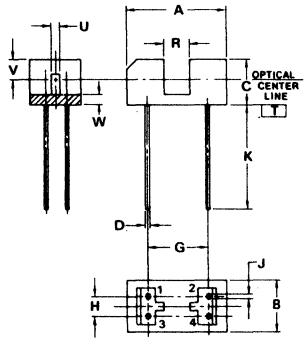

NOTES:
1. DIMENSIONS A AND B ARE DATUMS AND T IS A DATUM PLANE
2. POSITIONAL TOLERANCE FOR LEAD DIMENSION J:
   ⌖ 0.51 (0.020) Ⓜ T B Ⓜ
3. POSITIONAL TOLERANCE FOR LEAD DIMENSION D:
   ⌖ 0.51 (0.020) Ⓜ T A Ⓜ
4. DIMENSIONING AND TOLERANCING PER ANSI Y14.5, 1982.
5. CONTROLLING DIMENSION: INCH.

DIM	MILLIMETERS MIN	MILLIMETERS MAX	INCHES MIN	INCHES MAX
A	11.94	12.24	0.470	0.482
B	6.17	6.52	0.243	0.257
C	5.54	5.89	0.218	0.232
D	0.30	0.45	0.012	0.018
G	7.36 BSC		0.290 BSC	
H	2.54 BSC		0.100 BSC	
J	0.41	0.60	0.016	0.024
K	12.70	13.33	0.500	0.525
R	3.05	3.35	0.120	0.132
U	0.91	1.04	0.036	0.041
V	2.29 NOM		0.090 NOM	
W	1.50	1.62	0.059	0.064

PS438

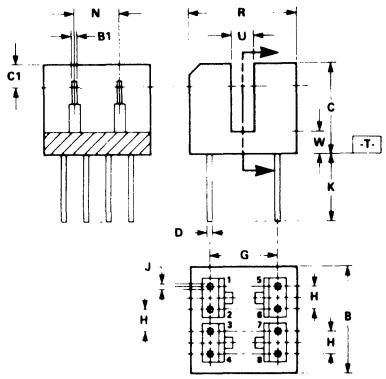

NOTES
1. DIMENSIONS R AND B ARE DATUMS AND T IS A DATUM SURFACE
2. POSITIONAL TOLERANCE FOR LEAD DIMENSION J
   ⌖ 0.51 (0.020) Ⓢ T B Ⓢ
3. POSITIONAL TOLERANCE FOR LEAD DIMENSION D
   ⌖ 0.51 (0.020) Ⓢ T R Ⓜ B Ⓢ
4. POSITIONAL TOLERANCE FOR U DIMENSION
   ⌖ 25 (.010) Ⓢ T R Ⓢ B Ⓢ
5. DIMENSIONING AND TOLERANCING PER ANSI Y14.5M, 1982
6. CONTROLLING DIMENSION: INCH

DIM	MILLIMETERS MIN	MILLIMETERS MAX	INCHES MIN	INCHES MAX
B	11.76	12.11	0.463	0.477
C	9.35	9.70	0.368	0.382
D	0.36	0.55	0.014	0.022
G	7.62 BSC		0.300 BSC	
H	2.54 BSC		0.100 BSC	
J	0.43	0.55	0.017	0.022
K	7.37		0.290	
N	5.38 BSC		0.212 BSC	
R	11.30	11.60	0.445	0.457
U	2.36	2.71	0.093	0.107
W	2.36	11.60	0.093	0.107
B1	0.48	0.53	0.019	0.021
C1	2.54 BSC		0.100 BSC	

PS442

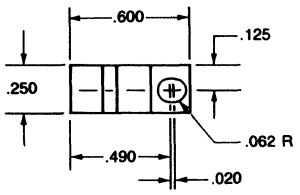

PS443

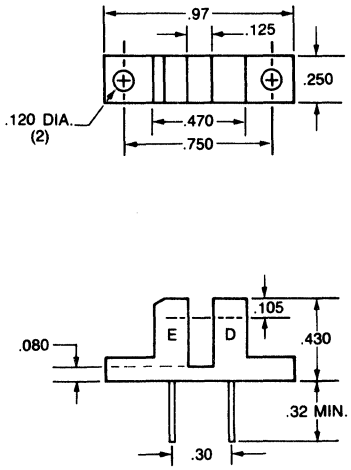

PS441

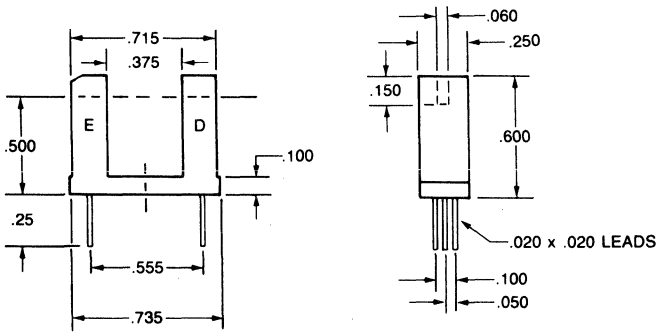

49. OUTLINE DRAWINGS

PS439 Slotted Optical SCR Switch

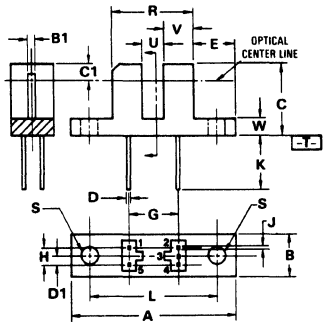

NOTES:

1. DIMENSIONS A AND B ARE DATUMS AND -T- IS A DATUM SURFACE.
2. POSITIONAL TOLERANCE FOR MOUNTING HOLES: ⌖ | ϕ 0.36 (0.014) Ⓜ | T | A Ⓜ | B Ⓜ
3. POSITIONAL TOLERANCE FOR LEAD DIMENSION J: ⌖ | 0.51 (0.020) Ⓜ | T | B Ⓜ
4. POSITIONAL TOLERANCE FOR LEAD DIMENSION D: ⌖ | 0.51 (0.020) Ⓜ | T | A Ⓜ | B Ⓜ
5. DIMENSIONING AND TOLERANCING PER Y14.5, 1982.

DIM	MILLIMETERS MIN	MILLIMETERS MAX	INCHES MIN	INCHES MAX
A	24.13	25.01	0.950	0.985
B	6.19	6.50	0.244	0.256
C	10.64	10.94	0.419	0.431
D	0.35	0.55	0.014	0.022
E	6.24	6.55	0.246	0.258
G	7.36 BSC		0.290 BSC	
H	2.54 BSC		0.100 BSC	
J	0.43	0.55	0.017	0.022
K	7.36	–	0.290	–
L	19.05 BSC		0.750 BSC	
R	11.98	12.19	0.472	0.480
S	3.24	3.37	0.124	0.133
U	3.07	3.32	0.115	0.129
V	4.36	4.52	0.172	0.178
W	2.38	2.69	0.094	0.106
B1	0.88	1.14	0.035	0.045
C1	2.54 NOM		0.100 NOM	
D1	1.27 BSC		0.050 BSC	

PS440 Slotted Optical SCR Switch

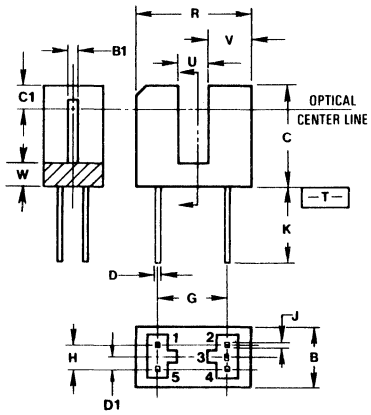

NOTES:

1. DIMENSIONS R AND B ARE DATUMS AND -T- IS A DATUM SURFACE.
2. POSITIONAL TOLERANCE FOR LEAD DIMENSION J: ⌖ | 0.51 (0.020) Ⓜ | T | B Ⓜ
3. POSITIONAL TOLERANCE FOR LEAD DIMENSION D: ⌖ | 0.51 (0.020) Ⓜ | T | R M | B Ⓜ
4. DIMENSIONING AND TOLERANCING ARE PER Y14.5, 1982.

DIM	MILLIMETERS MIN	MILLIMETERS MAX	INCHES MIN	INCHES MAX
B	6.19	6.50	0.244	0.256
C	10.64	10.94	0.419	0.431
D	0.35	0.55	0.014	0.022
G	7.36 BSC		0.290 BSC	
H	2.54 BSC		0.100 BSC	
J	0.43	0.55	0.017	0.022
K	7.36	–	0.290	–
R	11.98	12.19	0.472	0.480
U	3.07	3.32	0.115	0.129
V	4.36	4.52	0.172	0.178
W	2.38	2.69	0.094	0.106
B1	0.88	1.14	0.035	0.045
C1	2.54 NOM		0.100 NOM	
D1	1.27 BSC		0.050 BSC	

PS444

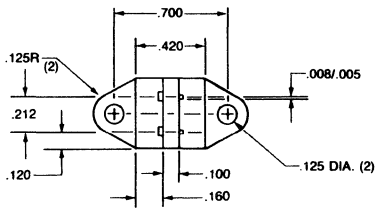

PS445

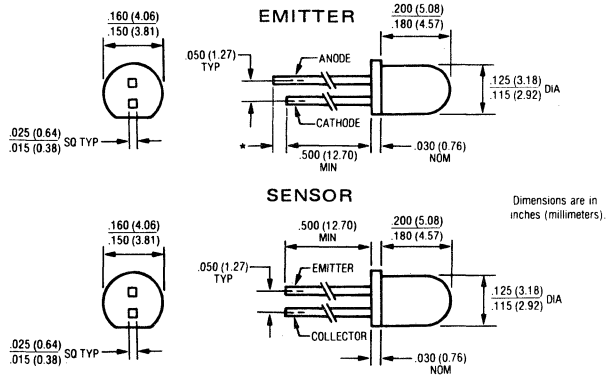

* For identification purposes, anode lead is .06 (1.52) nom. longer than cathode lead.

49. OUTLINE DRAWINGS

PS185

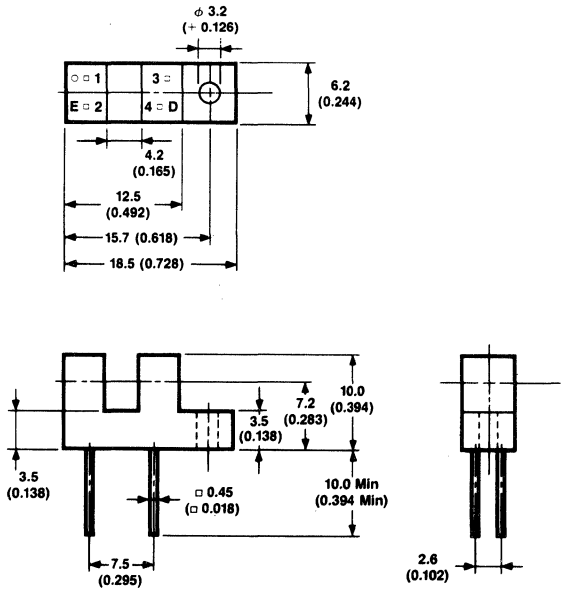

PS370

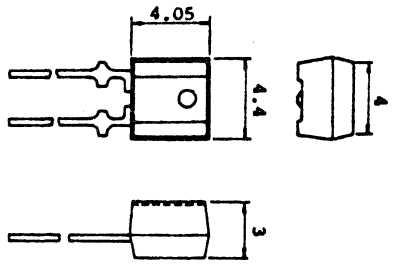

PS372

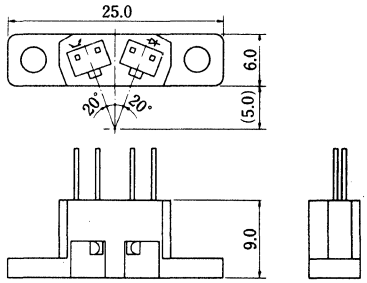

PS371

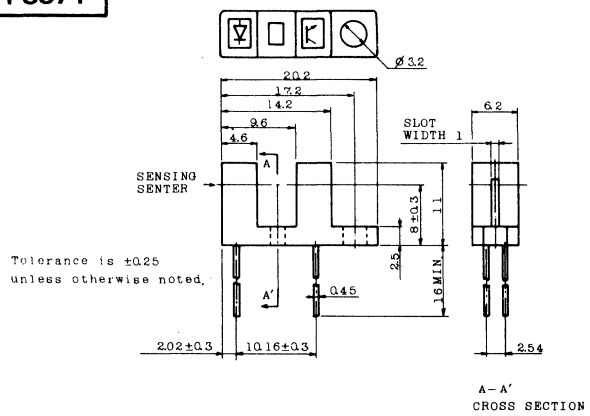

PS374

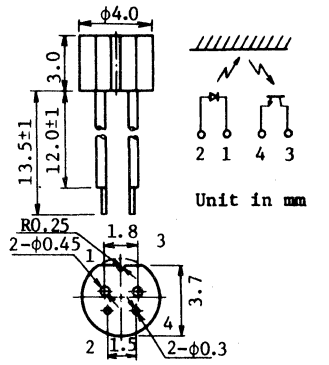

Tolerance is ±0.25 unless otherwise noted

1. LED CATHODE, 2. LED ANODE
3. PHOTO TRANSISTOR COLLECTOR
4. PHOTO TRANSISTOR EMITTER

PS480

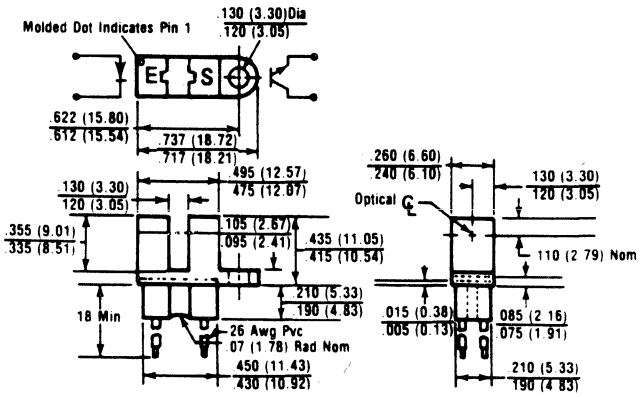

1. PS480 – 0.060 x 0.010 (1.524 x 0.254) *
2. PS480a – 0.060 x 0.050 (1.52U x 1.27) *

* Effective Sensor Aperture

49. OUTLINE DRAWINGS

PS373

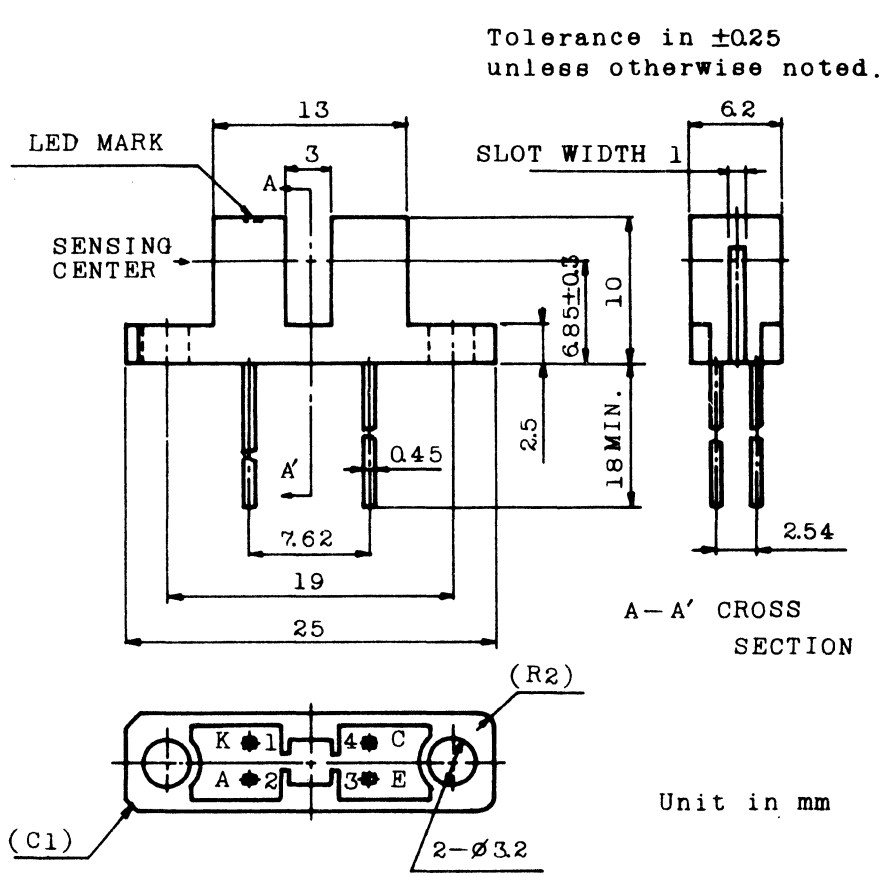

PS447

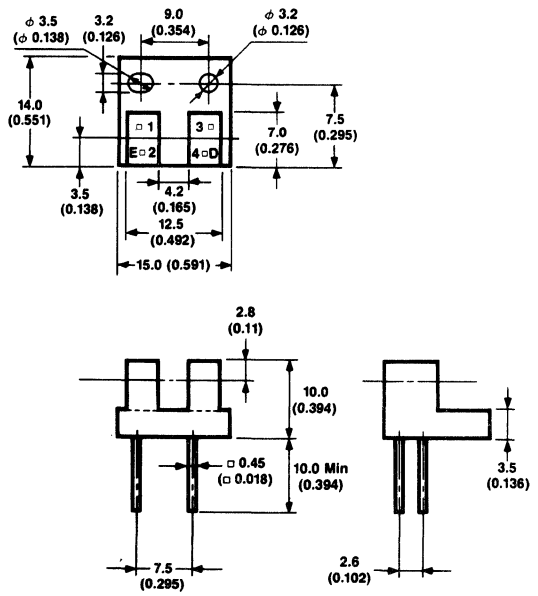

PS448

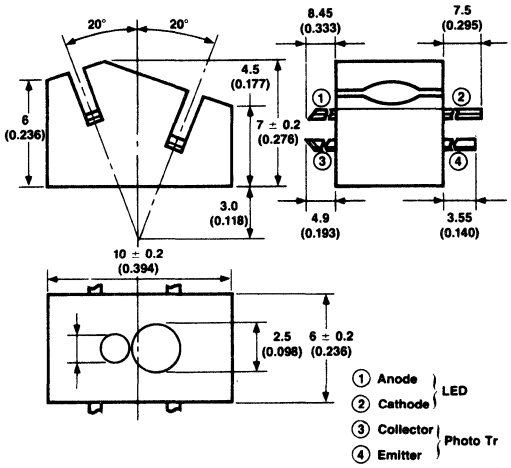

49. OUTLINE DRAWINGS

PS449

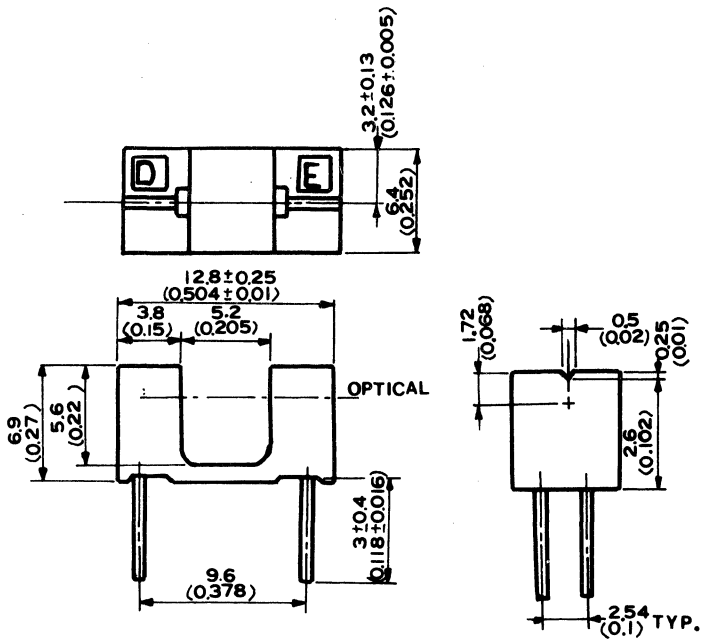

PS450

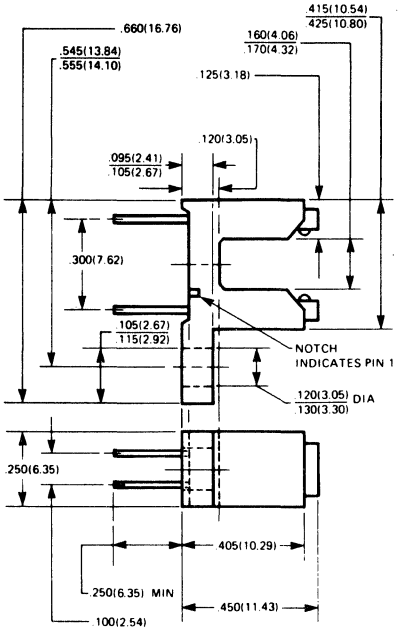

PS451

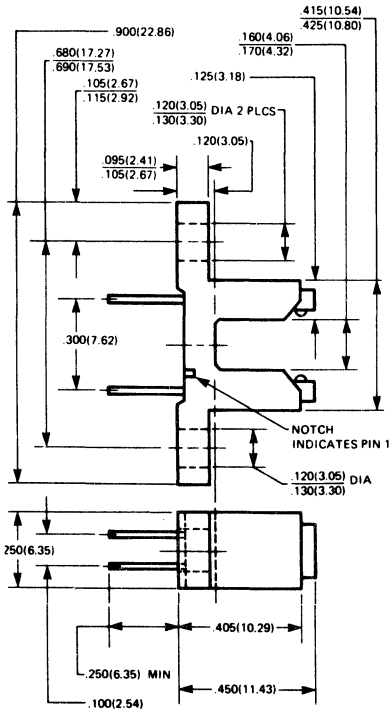

PS452

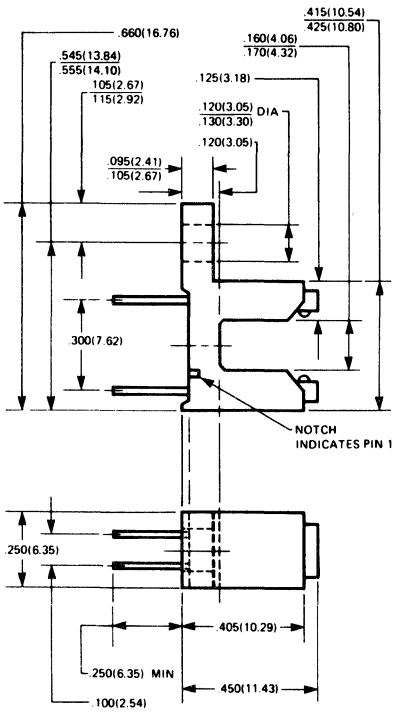

49. OUTLINE DRAWINGS

PS453

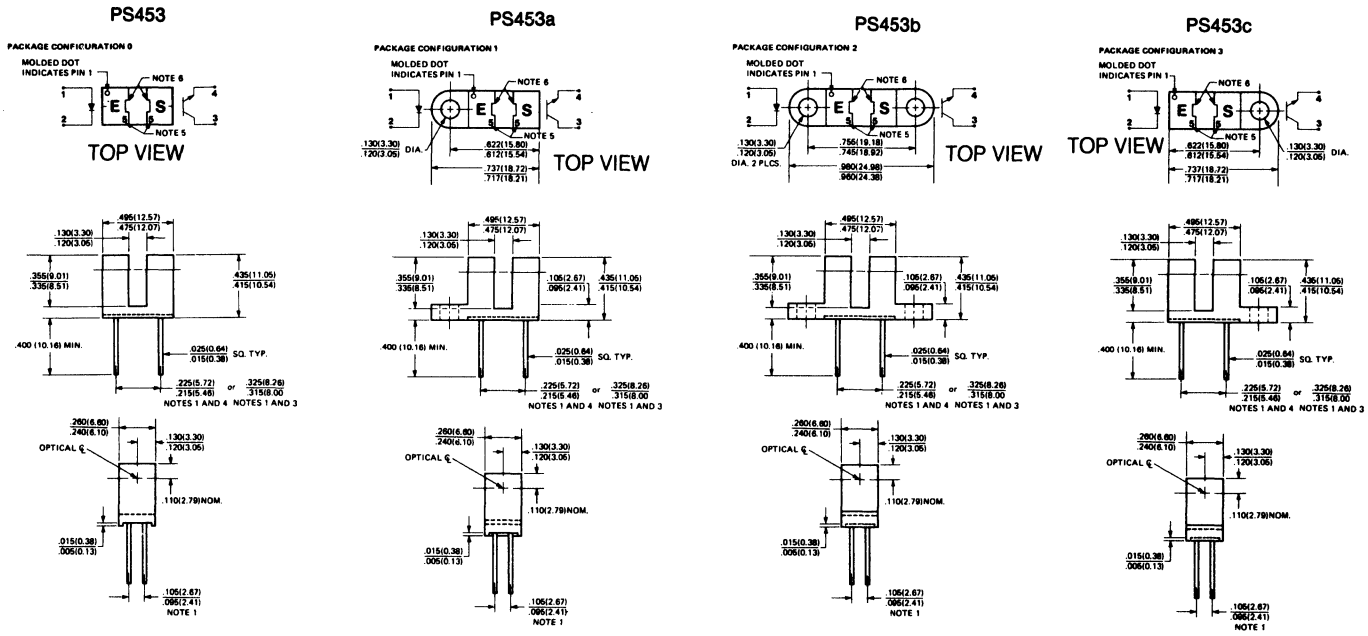

Note 1: Dimension controlled at housing surface only.

Note 2: Housing is soluble in chlorinated hydrocarbons and keytones. Recommended cleaning agents are Methanol and Isopropanol.

Note 3: HOA0860, HOA0861, HOA0862, HOA0870, HOA0871, HOA0872

Note 4: HOA0865, HOA0866, HOA 0867, HOA0875, HOA0876, HOA0877

Note 5: Molded number to identify aperture size. See part number guide.

Note 6: Dimensions of aperture opening dependent on housing material. See part number guide.

Note 7: Housings shown are Polycarbonate.

Note 8: RMA flux is recommended. Duration can be extended to 10 seconds maximum when wave soldering.

Note: 9: Derate linearly 1.25mW/°C above 25°C.

PART NUMBER GUIDE HOA08XX-XXX

Basic Part Number

Housing Material

6 = Polysulfone 7 = Polycarbonate

Mechanical and Electrical Specifications

0 = Electrical parameter A
Lead spacing .320 in. (8.13 mm)

1 = Electrical parameter B
Lead spacing .320 in. (8.13 mm)

2 = Electrical parameter C
Lead spacing .320 in. (8.13 mm)

5 = Electrical parameter A
Lead spacing .220 in. (5.59 mm)

6 = Electrical parameter B
Lead spacing .220 in. (5.59 mm)

7 = Electrical parameter C
Lead spacing .220 in. (5.59 mm)

Aperture width in front of sensor

5 = .050 in. (1.27 mm) *1 = .010 in. (.25 mm)
Aperture lengths are 0.060 in. (1.52 mm)
*available with parameter A only

Aperture width in front of LED

5 = .050 in. (1.27 mm)

Mounting configurations

0 = No mounting tabs
1 = Single mounting tab emitter side
2 = Both mounting tabs
3 = Single mounting detector side

49. OUTLINE DRAWINGS

PS454

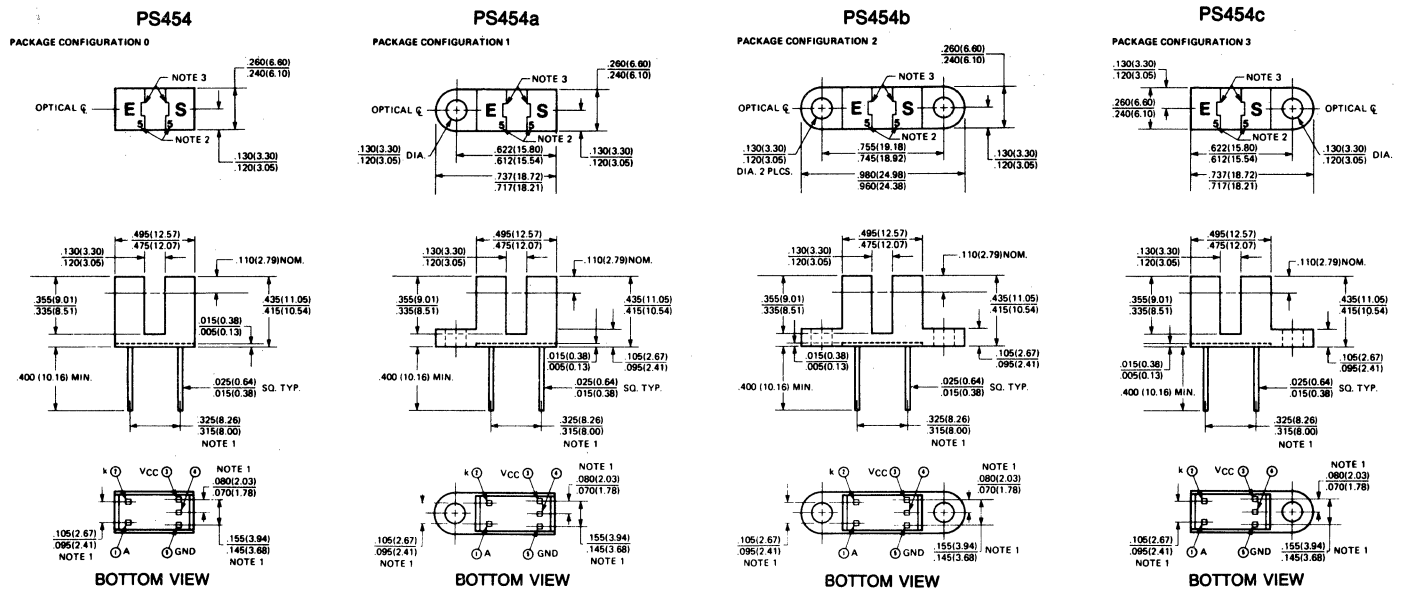

Note 1: This dimension is controlled at housing surface.
Note 2: Molded number to identify aperture size. See Part Number Guide.
Note 3: Dimensions of aperture opening dependent on housing material. See Part Number Guide.
Note 4: Housing is soluble in chlorinated hydrocarbons and ketones. Methanol and isopropanol are recommended as cleaning agents.
Note 5: Housings shown are polycarbonate.
Note 6: RMA flux is recommended. Duration can be extended to 10 second maximum when wave soldering.
Note 7: Derate linearly 1.25mW/°C above 25°C.
Note 8: Hysteresis is defined in terms of input current as follows:

$$H = \frac{I_{FT} - I_{FR}}{I_{FT}}$$

Where: I_{FT} = Current to trigger output
I_{FR} = Current to release output

HOA09XX-XXX

Schmitt Detector

Housing Material
6 = Polysulfone 7 = Polycarbonate

Mechanical and Electrical Specifications
1 = Output high with light on
3 = Output low with light on

Mounting Configuration
0 = No tabs
1 = Single mounting tab emitter side
2 = Both mounting tabs
3 = Single mounting tab detector side

Aperture width in front of sensor
5 = 0.050 in. (1.27mm) 1 = 0.010 in. (0.25mm)
Aperture length = 0.060 in. (1.52mm)

Aperture width in front of LED
5 = 0.050 in. (1.27mm)
Aperture length is 0.060 in. (1.52mm)

OUTLINE DIMENSIONS

Tolerance 3 plc decimals ± .010
2 plc decimals ± .030
Unless specified

ALL DIMENSIONS IN INCHES (MILLIMETERS)

49. OUTLINE DRAWINGS

PS455

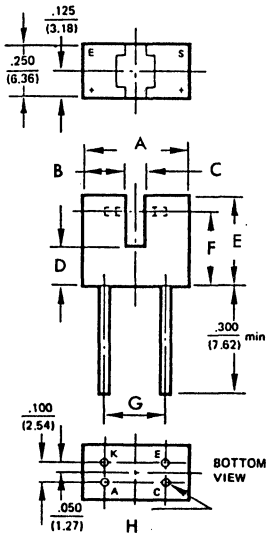

Suffix	A	B	C	D	E	F	G	H
PS455	12.7	5.10	2.54	4.45	10.80	8.89	7.62	0.51 DIA
PS455a	12.7	5.10	2.54	4.45	10.80	8.89	7.62	0.51 SQ
PS455b	12.95	3.81	5.33	1.27	6.86	5.08	10.16	0.51 SQ

PS456

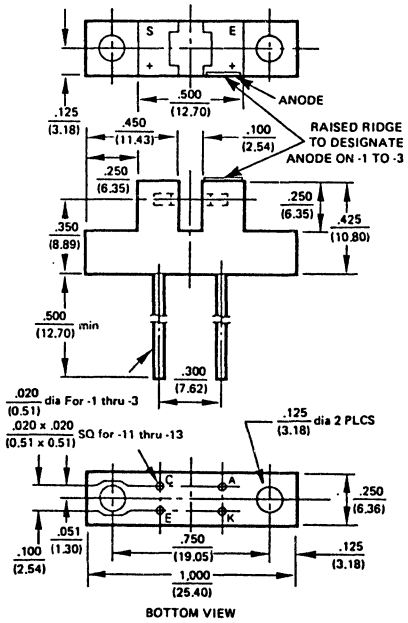

PS457

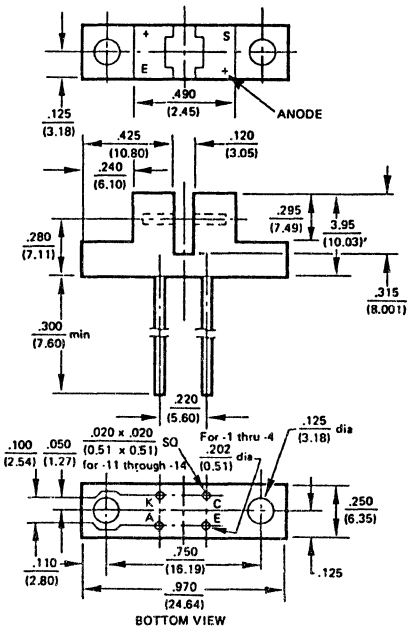

PS458

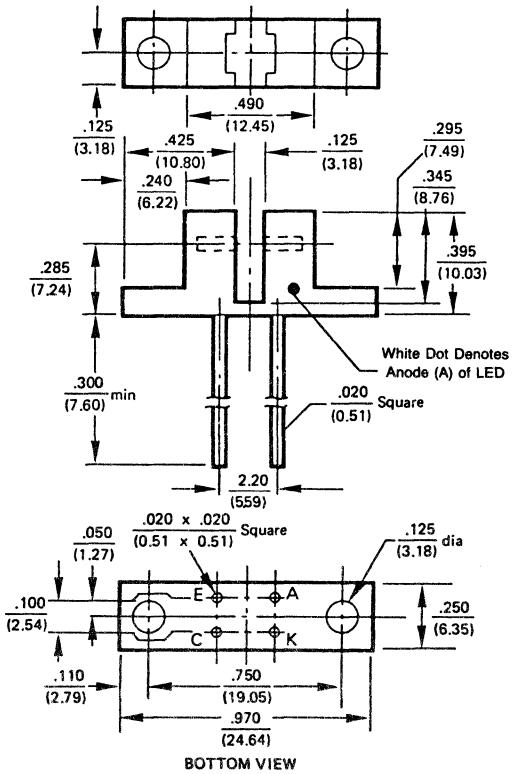

49. OUTLINE DRAWINGS

PS459

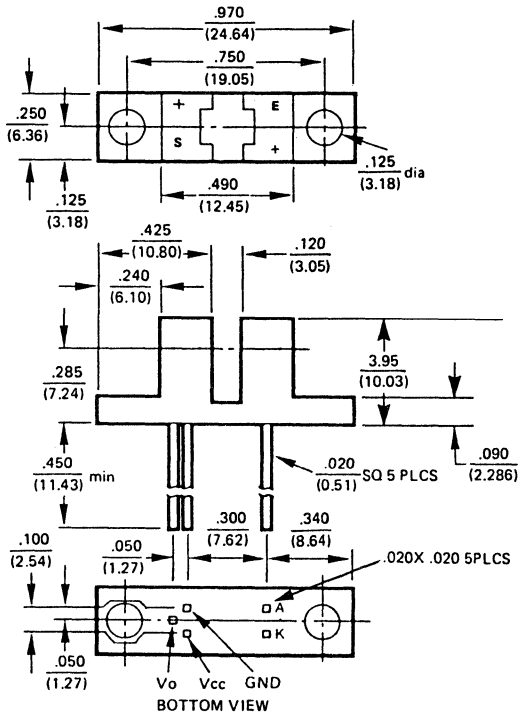

PS462

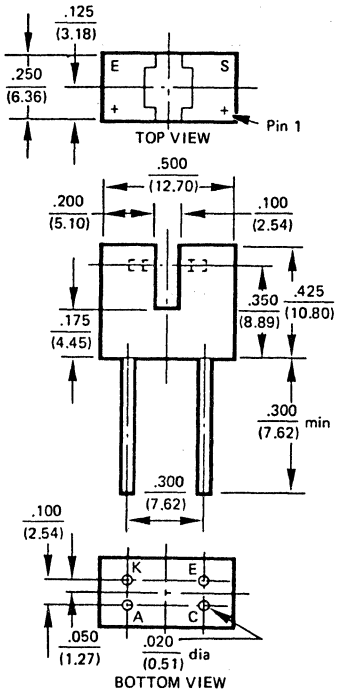

PS460

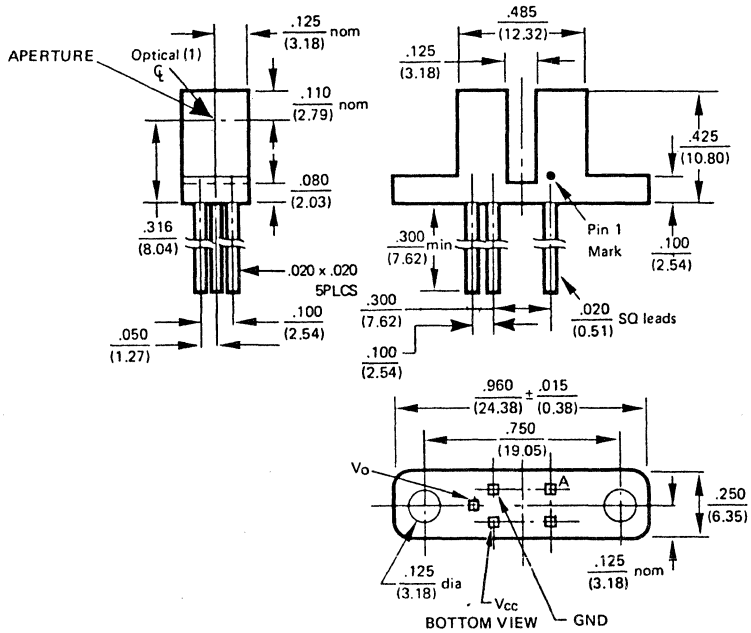

49. OUTLINE DRAWINGS

PS461

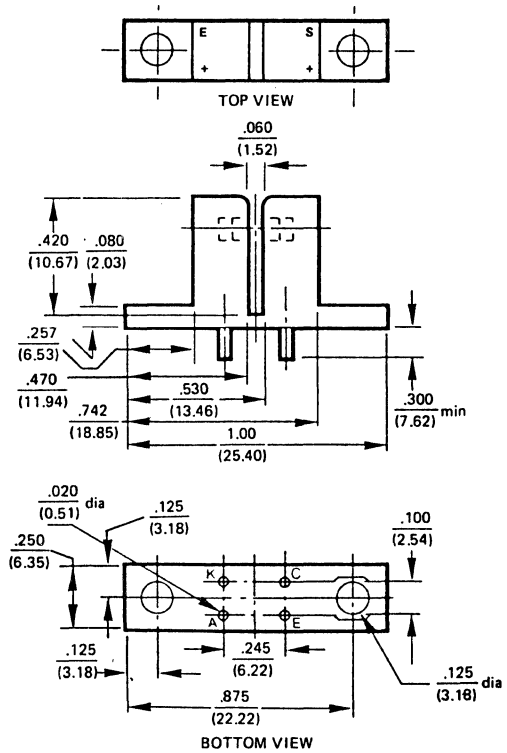

PS463

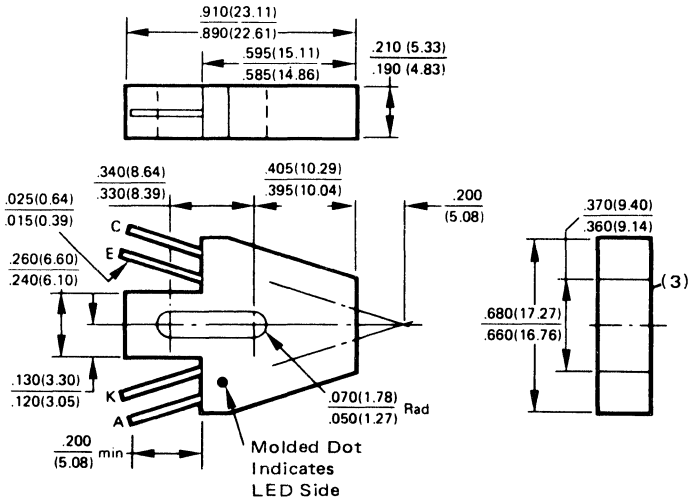

PS464

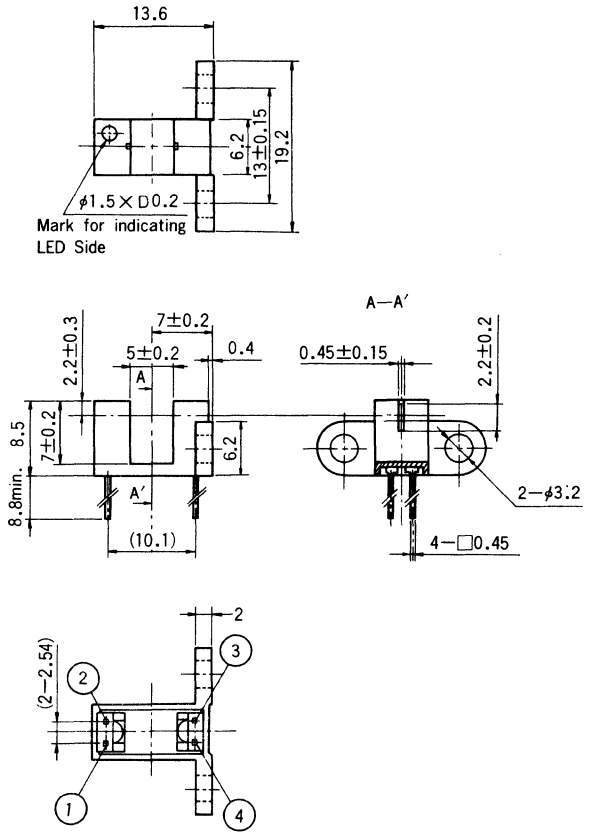

PS466

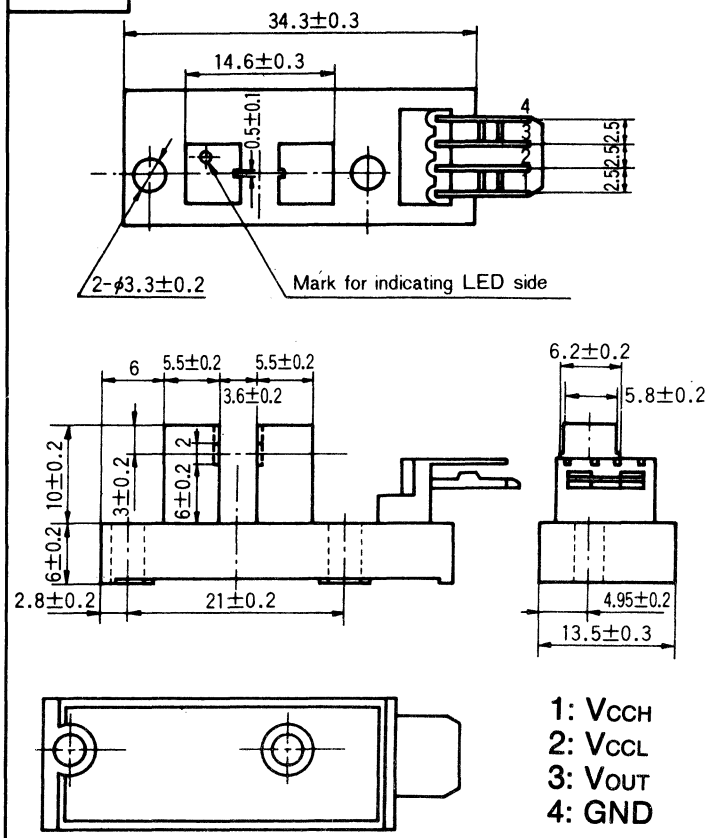

49. OUTLINE DRAWINGS

PS465

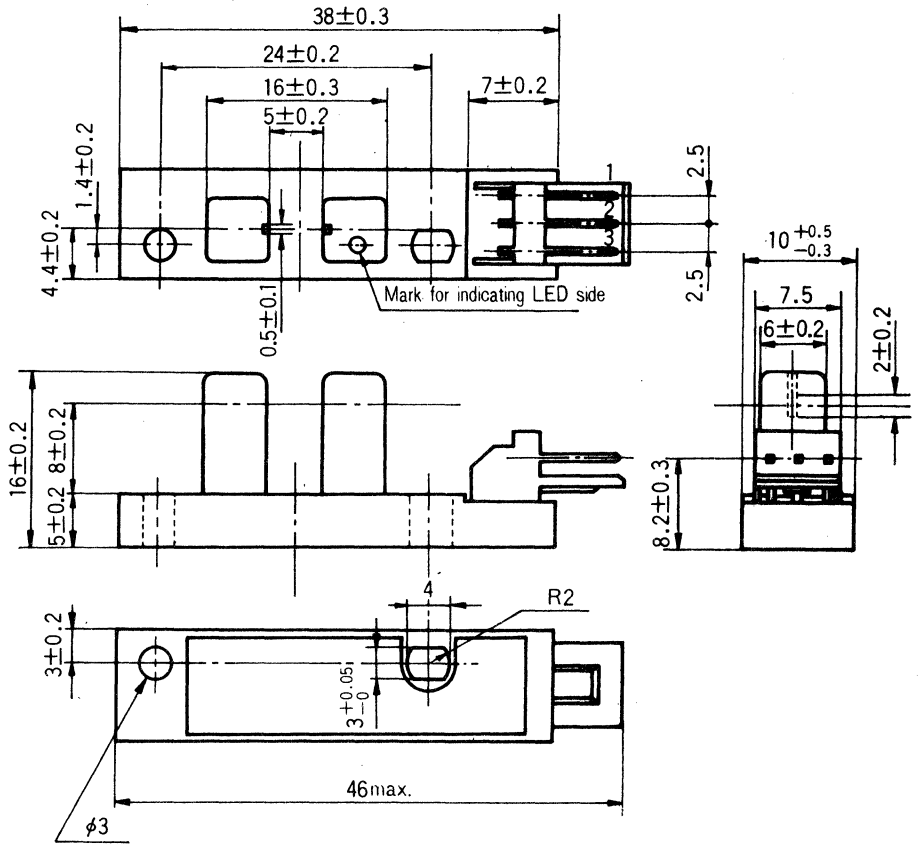

1: GND
2: VOUT
3: VCC

PS470

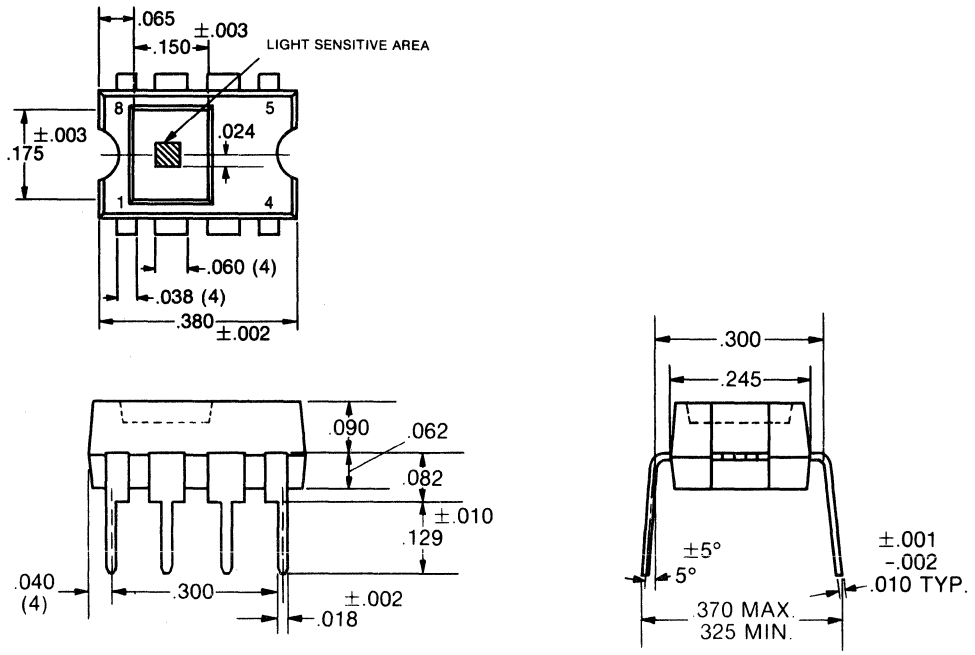

49. OUTLINE DRAWINGS

PS469

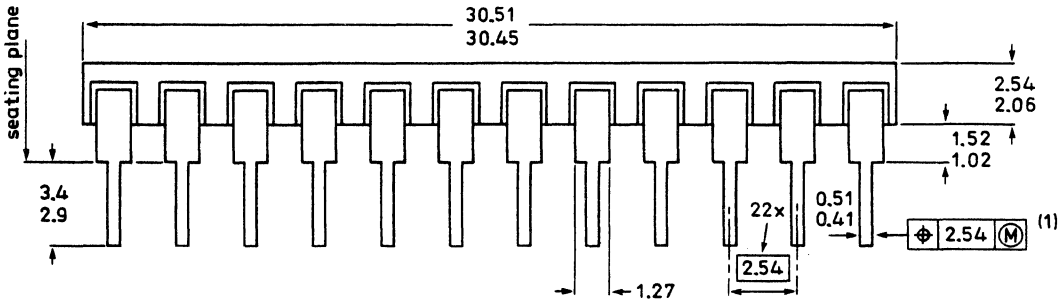

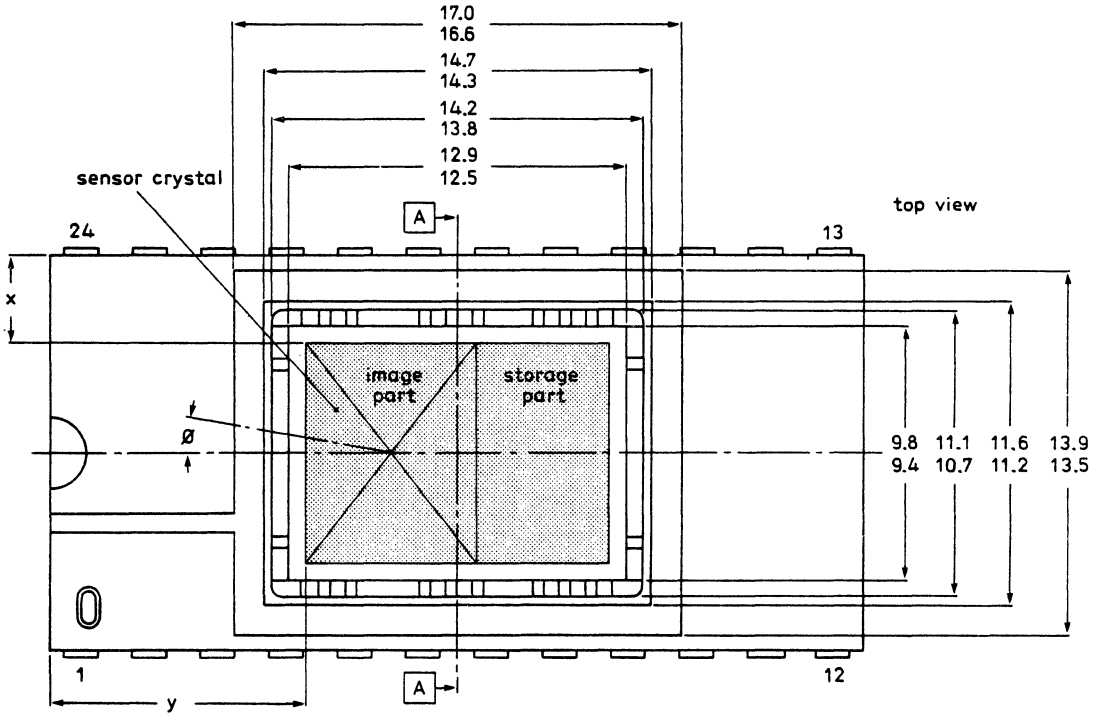

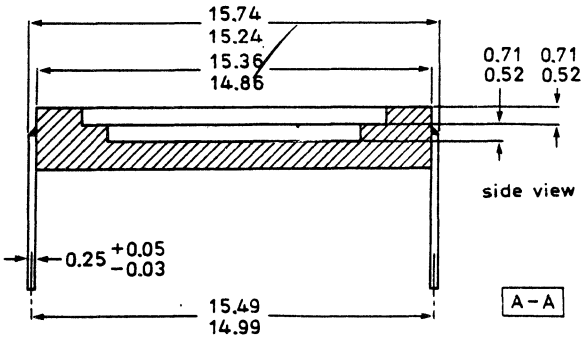

⊕ Positional accuracy.

Ⓜ Maximum Material Condition.

(1) Center-lines of all leads are within ±0.127 mm of the nominal position shown; in the worst case, the spacing between any two leads may deviate from nominal by ±0.254 mm.

49. OUTLINE DRAWINGS

PS467

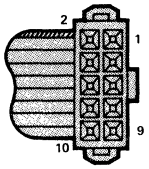

BOTTOM VIEW

PINOUT

PIN #	FUNCTION
1	CHANNEL A
2	V_{CC}
3	GROUND
4	N.C. OR GROUND
5	N.C. OR GROUND
6	GROUND
7	V_{CC}
8	CHANNEL B
9	V_{CC}
10	CHANNEL I

NOTE: REVERSE INSERTION OF THE CONNECTOR WILL PERMANENTLY DAMAGE THE DETECTOR IC.

MATING CONNECTOR
BERG 65-692-001 OR EQUIVALENT

Figure 7. Connector Specifications

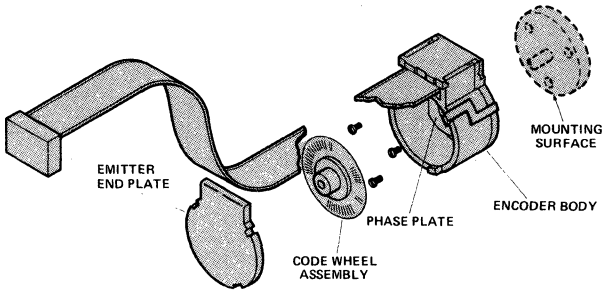

Figure 8. HEDS-5000 Series Encoder Kit

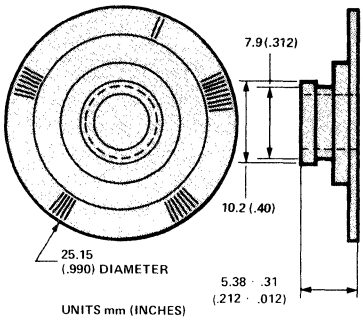

Figure 9. Code Wheel

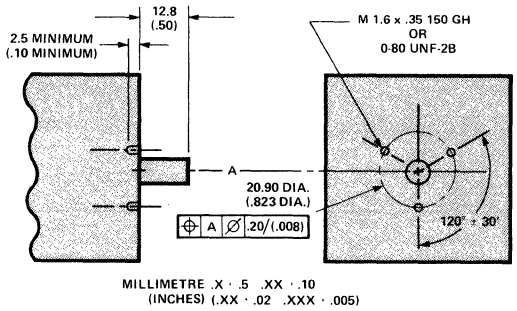

Figure 10. Mounting Requirements

Ordering Information

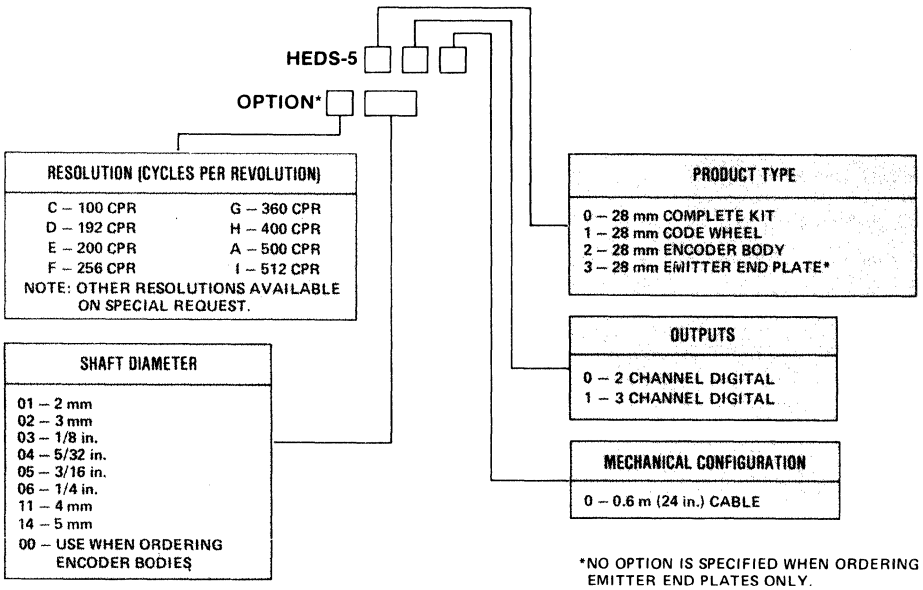

*NO OPTION IS SPECIFIED WHEN ORDERING EMITTER END PLATES ONLY.

49. OUTLINE DRAWINGS

PS468

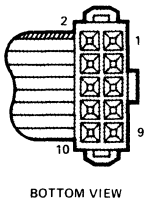

PINOUT

PIN =	FUNCTION
1	CHANNEL A
2	V_{CC}
3	GROUND
4	N.C. OR GROUND
5	N.C. OR GROUND
6	GROUND
7	V_{CC}
8	CHANNEL B
9	V_{CC}
10	CHANNEL I

MATING CONNECTOR
BERG 65-692-001 OR EQUIVALENT

Figure 7. Connector Specifications

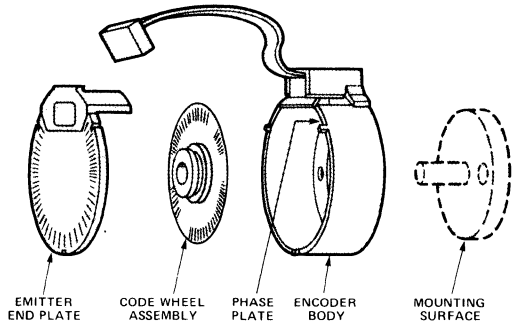

Figure 8. HEDS-6000 Series Encoder Kit

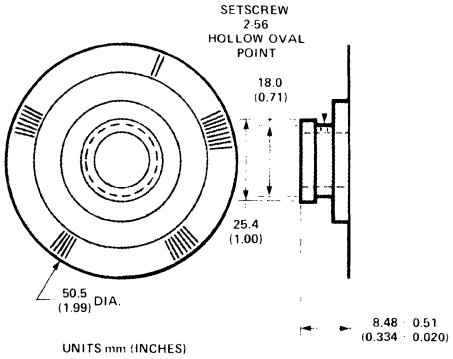

Figure 9. Code Wheel

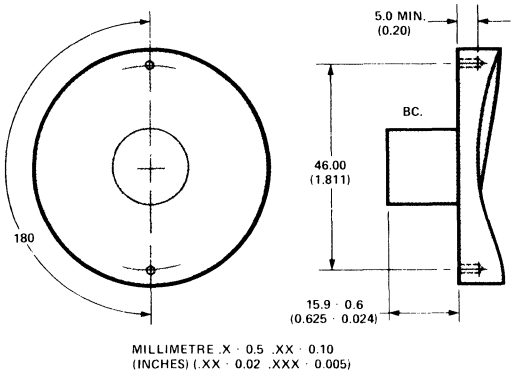

Figure 10. Mounting Requirements

Ordering Information

HEDS-6 ☐☐☐

OPTION* ☐☐

RESOLUTION (CYCLES PER REVOLUTION)

D – 192 CPR	I – 512 CPR
E – 200 CPR	B – 1000 CPR
H – 400 CPR	J – 1024 CPR
A – 500 CPR	

NOTE: OTHER RESOLUTIONS AVAILABLE ON SPECIAL REQUEST

SHAFT DIAMETER

05 – 3/16 IN.
06 – 1/4 IN.
07 – 5/16 IN.
08 – 3/8 IN.
09 – 1/2 IN.
10 – 5/8 IN.
11 – 4 mm
12 – 6 mm
13 – 8 mm
00 – USE WHEN ORDERING ENCODER BODIES

PRODUCT TYPE

0 – 56 mm COMPLETE KIT
1 – 56 mm CODE WHEEL
2 – 56 mm ENCODER BODY
3 – 56 mm EMITTER END PLATE*

OUTPUTS

0 – 2 CHANNEL DIGITAL
1 – 3 CHANNEL DIGITAL

MECHANICAL CONFIGURATION

0 – 0.6 m (24 IN.) CABLE

*NO OPTION IS SPECIFIED WHEN ORDERING EMITTER END PLATES ONLY.

49. OUTLINE DRAWINGS

PS471

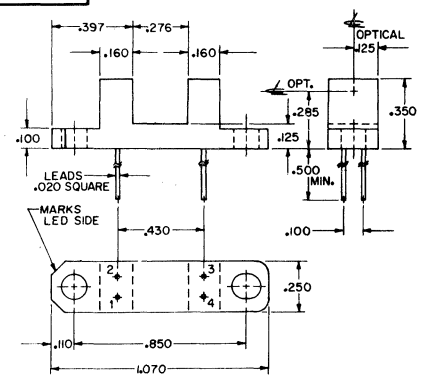

PS479

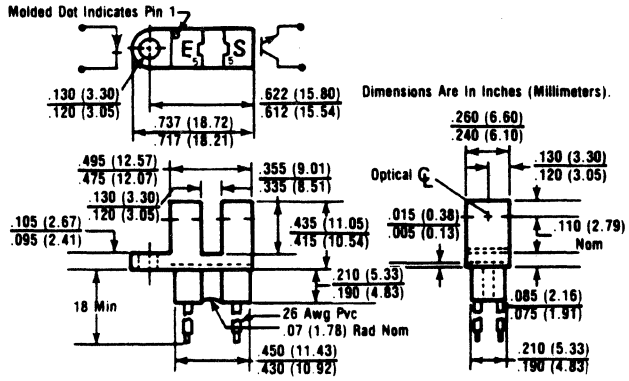

1. PS479 – 0.060 x 0.010 (1.524 x 0.254) *
2. PS479a – 0.060 x 0.050 (1.524 x 1.27) *

* Effective Sensor Aperture

PS474

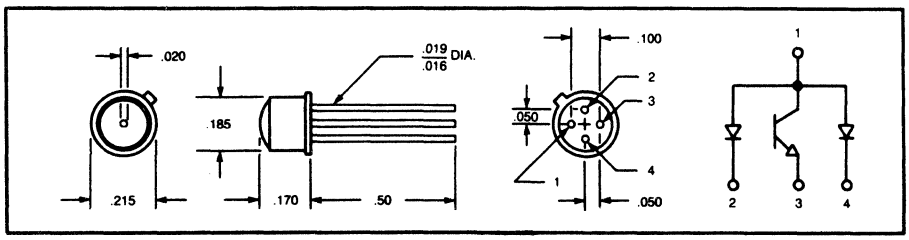

PS475

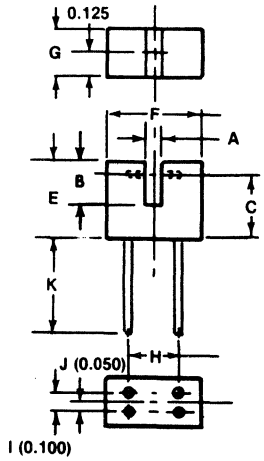

BOTTOM VIEW

Suffix	A	B	C	E	F	G	H	K (Min)
PS475	0.125 (3.18)	0.345 (8.77)	0.315 (8.00)	0.425 (10.8)	0.485 (12.32)	0.250 (6.35)	0.320 (8.13)	0.400 (10.16)
PS475a	0.200 (5.08)	0.220 (5.59)	0.200 (5.08)	0.270 (6.86)	0.510 (12.95)	0.250 (6.35)	0.400 (10.16)	0.300 (7.62)
PS475b	0.140 (3.56)	0.225 (5.72)	0.250 (6.35)	0.325 (8.26)	0.490 (12.45)	0.250 (6.35)	0.340 (8.64)	0.300 (7.62)

49. OUTLINE DRAWINGS

PS476

Color Code
Red-IRED Anode
Black-IRED Cathode
White-Phototransistor Collector
Green-Phototransistor Emitter

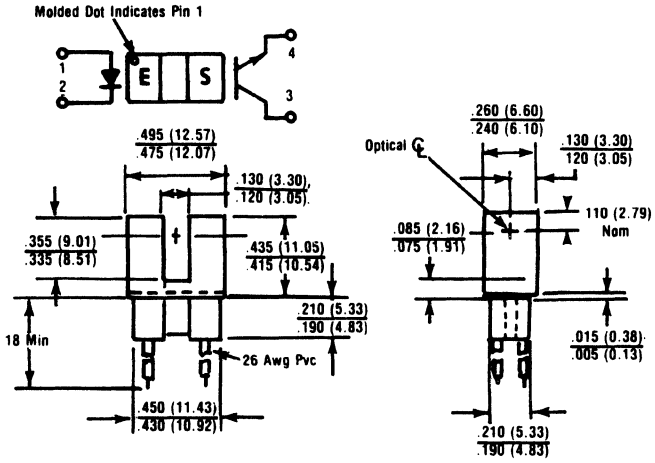

PS476 – 0.060 x 0.010 *
PS476a – 0.060 x 0.050 *

* Effective Sensor Aperture (Inches) LXW

PS481

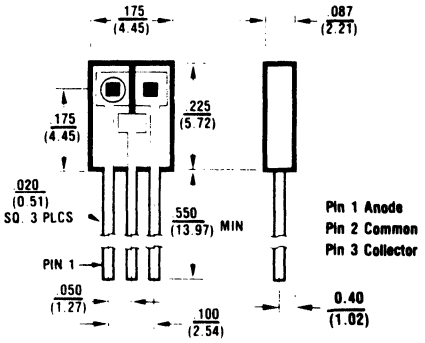

PS472

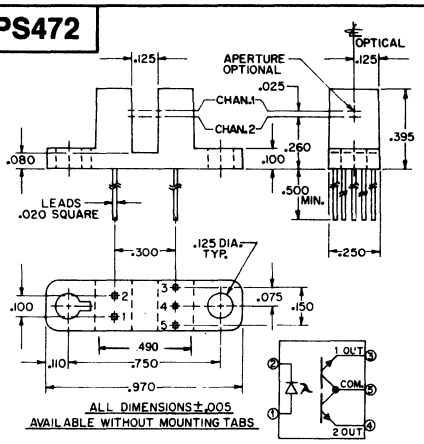

PS477

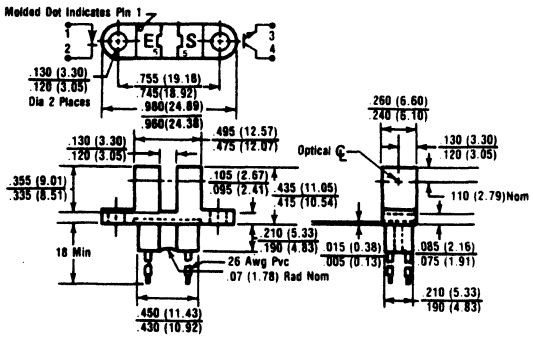

PSS477 – 0.060 x 0.010*
PSS477a – 0.060 x 0.050*

* Effective Sensor Aperture (Inches) LXW

PS473

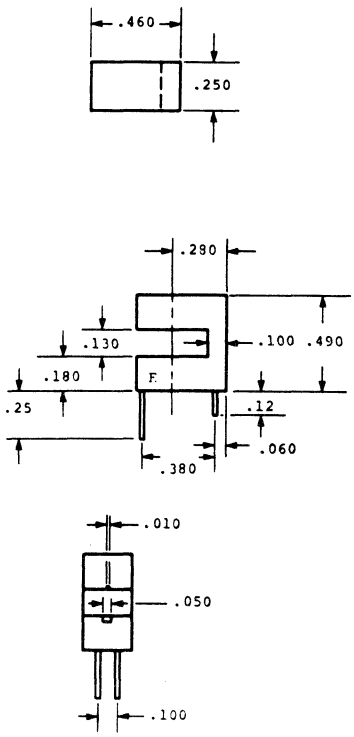

PS478

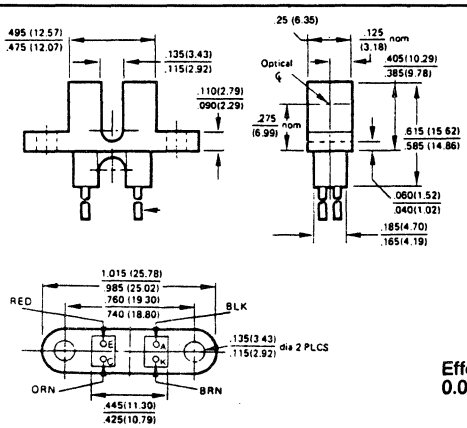

Effective Sensor Aperture (Inches) – 0.037 DIA

49. OUTLINE DRAWINGS

PT1

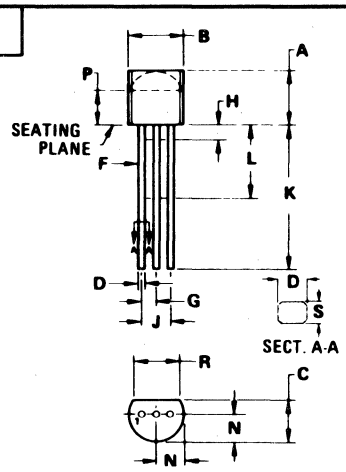

DIM	MILLIMETERS MIN	MILLIMETERS MAX	INCHES MIN	INCHES MAX
A	4.32	5.33	0.170	0.210
B	4.44	5.21	0.175	0.205
C	3.18	4.19	0.125	0.165
D	0.41	0.56	0.016	0.022
F	0.41	0.48	0.016	0.019
G	1.14	1.40	0.045	0.055
H	–	2.54	–	0.100
J	2.41	2.67	0.095	0.105
K	12.70	–	0.500	–
L	6.35	–	0.250	–
N	2.03	2.92	0.080	0.115
P	2.92	–	0.115	–
R	3.43	–	0.135	–
S	0.36	0.41	0.014	0.016

PT2

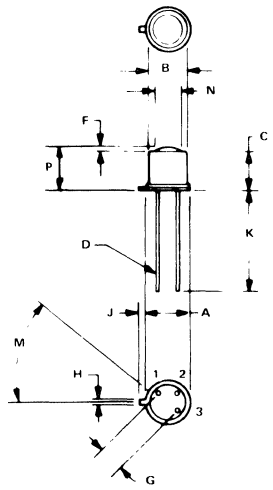

	A	B	C	D	F	G	H	J	K	M	N	P
PT2	.209 .230	.178 .195	.180 .210	.016 .019	.020 .040	.100 TP	.039 .046	.033 .048	.500 MIN	.45° MIN	.132 .158	.200 .250
PT2a	.209 .230	.178 .195	.200 .250	.016 .019	.020 .040	.100 BSC	.039 .046	.033 .048	.500 MIN	45° MIN	.132 .158	.220 .290
PT2b	.224	.188		.019		.100			.511		.157	.244
PT2f	.207 .213	.180 .188	.016	.016 .019		.100	.036 .046	.033 .046	.500 MIN	45°	.120	.220 .260
PT2g	.209 .230	.178 .195		.016 .019		.100	.036 .046	.028 .048	.500 MIN	45°		.225 .245
PT2m	.209 .230	.178 .195	.180 .270	.016 .019	.020 .038	.100	.039 .046	.500 MIN		.137 .143		
PT2p	.210 .216	.185 MAX		.017		.088 .111			.492 .570			.212 .236
PT2r	.230 MAX	.195 MAX	.270 MAX	.016 .019		.090 .110	.043 MAX	0.43 MAX	1.500 MIN	42° 48°	.195 MAX	
PT2t	.224 MAX	.185	.141	.017	.000	.098	.039	.039	.787	45°	.118	
PT2u	.224 MAX	.185	.177	.017	.090	.098	.039	.039	.787	45°	.185	.267
PT2v	.210	.183	.192 .201	.017	.045 .065	.100	.040		.500 MAX	45°	.155	
PT2w	.210	.165			.078 MAX	.100			.551	45°		
PT2x	.212	.190	.202	.018	.040	.100	.045	.048	.500	45°	.125	
PT2y	.209 .230	.180 .190	.170 .210	.016 .019	.010	.100	.036 .046	.028 .048	.500 MIN	45°	.140 MIN	
PT2z	.208 .232	.177 .196		.016 .019		.098	.035 .047	.027 .047	.500 MIN	45°		.224 .255
PT2aa	.220 MAX	.189 MAX		.020 MAX		.100	.046 MAX	.046 MAX	.500 MIN	45°		.272 MAX
PT2ab	.207 .219	.177 .185		.018		.100	.039	.039	.500 MIN	45°		.236 .260
PT2ac	.219	.185	.147		.000	.100	.040		.500	45°	.155	.147
PT2ad	.212	.185		.017	.035				.511		.118	.141
PT2ae	.205 .215	.178 .188		.017 .019		.096 .104			1.00 NOM	45°		.220 .235

PT4

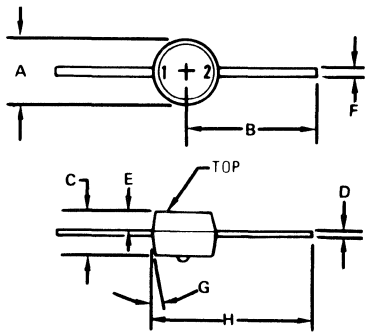

DIM	INCHES MIN	INCHES MAX	MILLIMETERS MIN	MILLIMETERS MAX
A	0.078	0.092	1.98	2.34
B	0.160		4.06	
C	0.048	0.058	1.22	1.47
D	0.004	0.006	0.102	0.152
E	0.020	0.030	0.508	0.762
F	0.010	0.016	0.254	0.406
G	3°	7°	3°	7°
H	0.213 REF		5.41 REF	

PT5

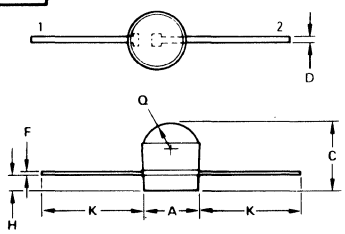

DIM	MILLIMETERS MIN	MILLIMETERS MAX	INCHES MIN	INCHES MAX
A	3.56	4.06	0.140	0.160
C	4.57	5.33	0.180	0.210
D	0.33	0.48	0.013	0.019
F	0.23	0.28	0.009	0.011
H	1.02	1.27	0.040	0.050
K	6.35	–	0.250	–
Q	1.91 NOM		0.075 NOM	

PT6

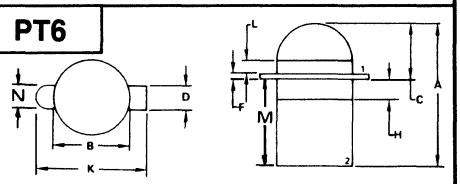

	A	B	C	D	F	H	K	L	M	N
PT6	.100 .130	.058 .062	.028 .040	.016 .024	.005 .010	.019 .021	.083 .093	.008 .012		
PT6a	.124 .135	.058 .061	.042 .047	.016 .024	.005 .010	.019 .021	.084 .092			
PT6b	.102 .118	.058 .062		.016 .024	.005 .010		.084 .094			
PT6c	.101 .114	.062 MAX	.022 .026	.015 .023	.005 .009	.018 .020	.083 .092			
PT6d	.109	.060			.007		.088		.085	.020
PT6e	.128	.060			.005		.088		.085	.020
PT6f	.102 .125	.058 .061		.016 .024	.005 .010	.019 .021	.084 .092		.082 .088	.010 RAD
PT6g	.102 .115	.058 .061		.016 .024	.005 .010	.019 .021	.084 .092		.082 .088	.010 RAD
PT6h	.122 .135	.058 .062		.016 .024	.005 .010		.084 .092		.082 .088	.010 RAD.

PT9

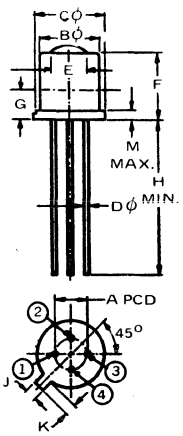

	A	B	C	D	E	F	G	H	J	K	M
PT9	.100	.188	.224	.019	.157	.267	.104	.511			
PT9a	.098	.179 .190	.210 .230	.019		.169 .208		1.496	.039	.039	.027
PT9b	.100	.178 .195	.209 .230	.016 .019		.200 .225		.500 MIN	.036 .046	.028 .048	.030 MAX
PT9c	.090 .110	.195 MAX	.230 MAX	.016 .019	.195 MAX	.270 MAX		1.500 MIN	.043 MAX	.043 MAX	.015 MAX

49. OUTLINE DRAWINGS

PT11

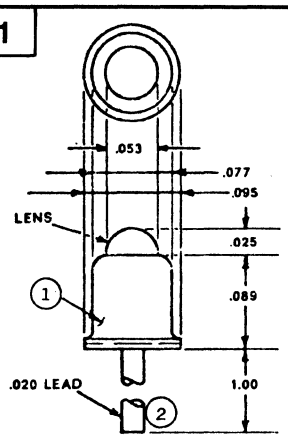

PT23

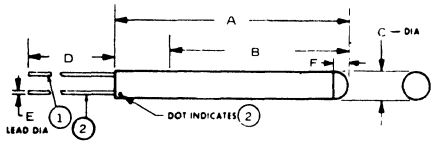

	A	B	C	L	E	F
PT23	.500 .600	.400	.076 .085	1.50 MIN	.009 .011	
PT23a	.500 .600	.076 .082	.076 .085	1.50 MIN	.009 .011	

PT21

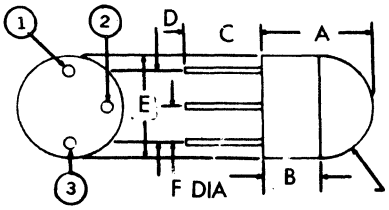

	A	B	C	D	E	F
PT21	.170 .210	.095 .105	.400 MIN	.100	.190 .210	
PT21a	.140 .210	.105 TYP	.400 MIN	.100	.200	.016 .022
PT21b	.120 .220	.105 TYP	.400 MIN	.100	.200	.016 .022
PT21c	.190 .210	.105 TYP	.400 MIN	.100	.200	.016 .019
PT21d	.190 .210	.105 TYP	.400 MIN	.100	.200	.016 .022

PT15

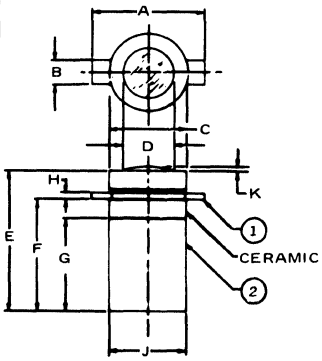

	A	B	C	D	E	F	G	H	J	K
PT15	.083 .093	.020	.057 .063	.035 .045	.100 .120	.083 .097	.075	.005	.057 .063	.005 MAX

PT18

	A	B	C	D	E	F	G	H	J	K	M	N	P
PT18	.205 .215	.178 .190	.150 .160	.010 MAX	.190 .210	.025 MAX	.500 MIN	.016 .019	.100	.050	.035 .045	45°	.137 .147
PT18a	.207 .213	.180 .188	.155		.195 .220	.018 .024	.500 MIN	.016 .019	.100	.050	.036 .046	45°	.136 .146
PT18b,c	.370 MAX	.335 MAX	.218		.240 .260		1.500 MIN	.016 .019	.190 .210	.080 .105	.027 .035	42° 48°	
PT18d	.209 .230	.178 .195			.170 MAX	.040 MAX	1.500 MIN	.016 .019	.100	.050	.036 .046	45°	
PT18f	.210 .216	.185 MAX			.192 .204		.492 .570	.017	.088 .111				
PT18h	.230 MAX	.195 MAX			.270 MAX	.015 MAX	1.500 MIN	.016 .019	.090 .110	.045 .055	.043 MAX	42° 48°	
PT18j	.209 .230	.178 .195			.170 .210	.030 MAX	.500 MIN	.016 .019	.100	.050	.036 .046	45°	
PT18k	.209 .224	.180 .186			.136 .156	.030 MAX	.750 MAX	.016 .019	.100	.050	.036 .046	45°	
PT18l	.209 .230	.189 .210			.210	.030	.500 MIN		.100			45°	.078 .098
PT18m	.228	.188	.100		.216		.500	.045	.100			45°	.160
PT18n	.209 .230	.178 .196	.170 .210			.030 MAX	.500 MIN					45°	

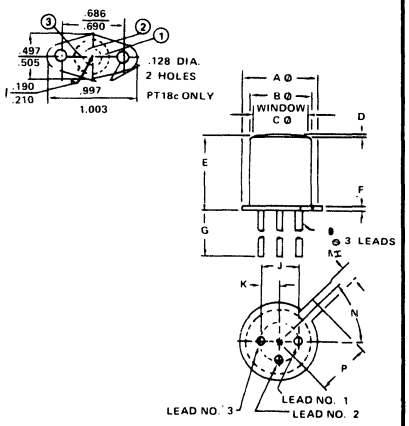

PT14

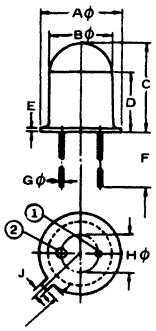

	A	B	C	D	E	F	G	H	J	K
PT14a	.228 MAX	.177 .185	.275 MAX	.177	.019	.499 MIN	.017	.099	.039	.039
PT14b	.211	.181	.260	.177		.512	.018	.098	.039	.039
PT14c	.209 .230	.178 .195	.205 .275	.170 .210	.030 MAX	.500 MIN	.016 .019	.100 TYP	.036 .046	.028 .048
PT14d	.212	.169	.220	.141		.511	.017	.098		
PT14e	.175 .190	.149 .165	.224 .263	.164 .185	.015 TYP	.511 .590	.017 TYP	.092 .107	.039 TYP	.039 TYP

PT100

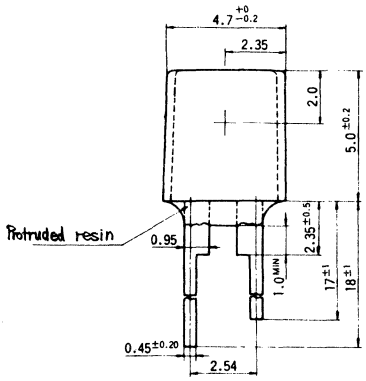

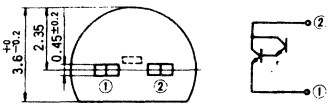

①Emitter
②Collector
Unit : mm

PT115

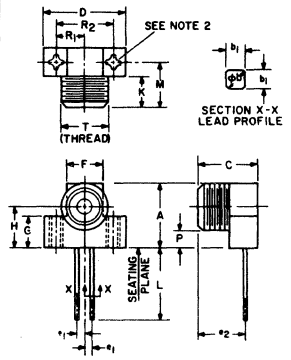

SYM.	MILLIMETERS MIN.	MILLIMETERS MAX.	INCHES MIN.	INCHES MAX.	NOTES
A	10.67	11.17	.420	.440	
ϕb	.61	.66	.024	.026	1
b1	.50	NOM.	.020	NOM.	1
C	9.88	10.26	.389	.404	
D	13.47	13.97	.530	.550	
e_1	1.27	NOM.	.050	NOM.	
e_2	7.93	8.07	.312	.318	
F	5.87	6.12	.231	.241	
G	5.08	5.58	.200	.220	
H	6.84	7.08	.269	.279	
K	5.11	5.25	.201	.207	
L	12.22	—	.481	—	
M	7.73	7.97	.304	.314	
P	3.00	REF.	.118	REF.	
R_1	4.70	4.82	.185	.190	
R_2	9.40	9.65	.370	.380	
T			5/16-32 NEF 2A		

NOTES:
1. Two Leads
2. Mounting Holes see attached drawing or M2x0.4 or Self-Tapping Screws

49. OUTLINE DRAWINGS

PT27

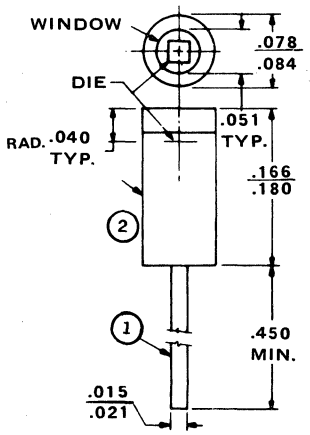

PT30

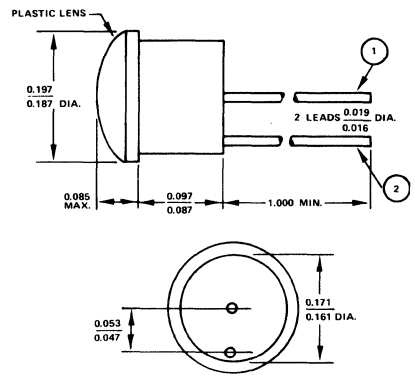

PT31

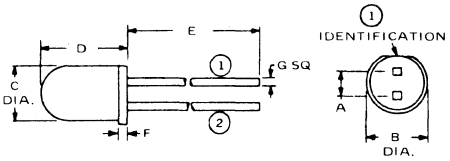

	A	B	C	D	E	F	G
PT31	.045 .060	.140 .160	.110 .130	.180 .210	.500 MIN	.020 .040	.018 .024
PT31a	.045 .055	.140 .160	.110 .130	.180 .210	.500 MIN	.020 .040	.018 .024
PT31b	.050	.155	.120	.215	.500 MIN	.025	.020
PT31c	.050 TYP	.150 .160	.115 .125	.180 .200	.500 MIN	.030 NOM	.015 .025

PT32

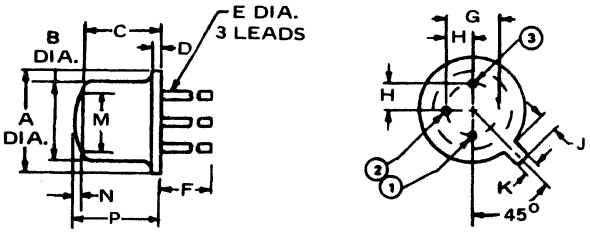

	A	B	C	D	E	F	G	H	J	K	M	N	P
PT32r	.211 .216	1.63 1.67	.110		.018	.492 .570	.10						.126 .150

PT34

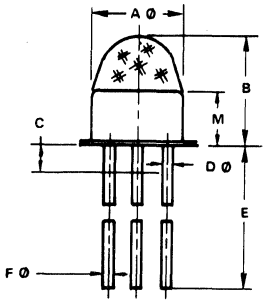

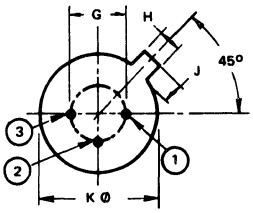

	A	B	C	D	E	F	G	H	J	K	M
PT34	.160 .170	.196 MAX	.051 MAX	.039 MAX	.499 MIN	.017 .021	.099	.039	.035	.200 .216	
PT34a	.161 .173	.177 MAX			.499 MIN	.018 MAX	.099	.045 MAX	.046 MAX	.228 MAX	
PT34b	.169	.157			.492 .570	.017	.088 .111			.210 .222	.106 .110
PT34c	.185				.551		.100			.212	.196
PT34d	.177 .185	.275 MAX		.017	.499 MIN	.017	.098	.039	.039	.228 MAX	.177
PT34e	.165	.150			.500		.100			.200	.100
PT34f	.177 .192	.244 .283		.017 DIA	.511 MIN	.017 DIA	.090 .110	.039 TYP	.039 TYP	.204 .220	.169 .185

PT36

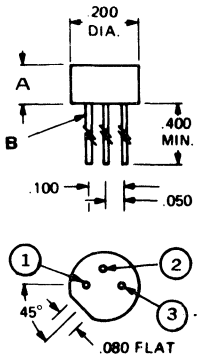

	A	B
PT36	.100 .126	.016 .022
PT36a	.100 .136	.016 .022
PT36b	.100 .125	.018 .019
PT36c	.095 .115	.017 .019

PT38

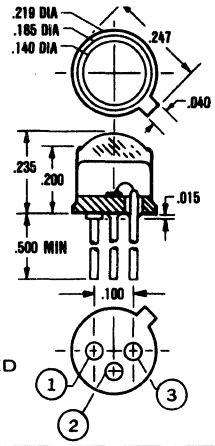

PT38a: PIN 2 NOT CONNECTED

PT39

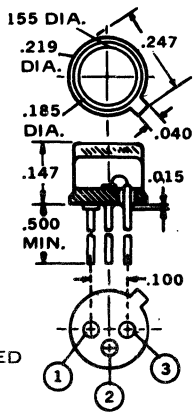

PT39a: PIN 2 NOT CONNECTED

PT46

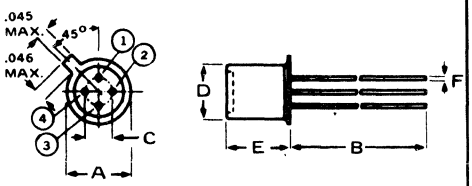

	A	B	C	D	E	F
PT46	.228 MAX	.499 MIN	.099	.188 MAX	.208 MAX	.018 MAX
PT46b	.230 MAX	1.500 MIN	.090 .110	.195 MAX	.270 MAX	.016 .019

PT47

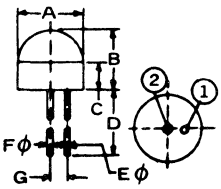

	A	B	C	D	E	F	G
PT47	.106 .129	.157 MAX	.078	.433 MIN	.011	.017	.035
PT47a	.120	.161	.081	.531	.010	.020	.040
PT47b	.114 MAX	.137 MAX	.078	.547	.011	.017	.031
PT47c	.125 MAX	.149 .165	.070 .086	.570 .649	.011 TYP	.017 TYP	.027 .043
PT47d	.116	.157	.079	.610	.012	.018	.035
PT47e	.110 .126	.118 .157	.078 TYP	.492 MIN	.011 TYP	.017 TYP	.031 TYP

49. OUTLINE DRAWINGS

PT50

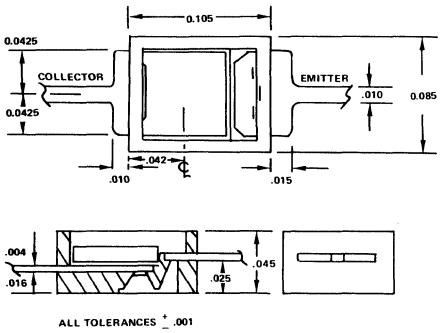

PT51

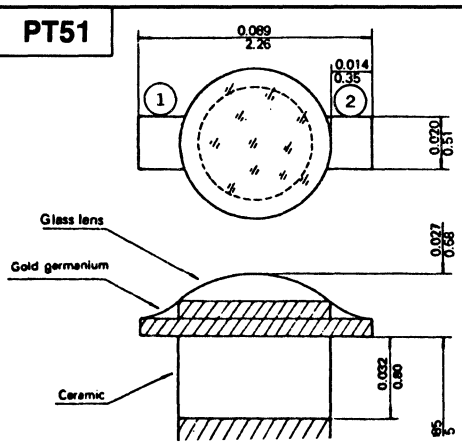

PT54

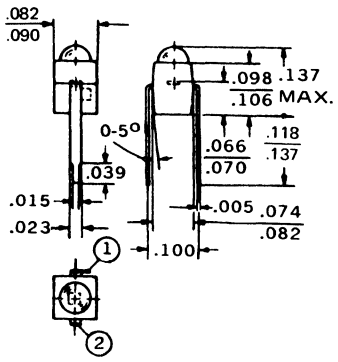

PT97

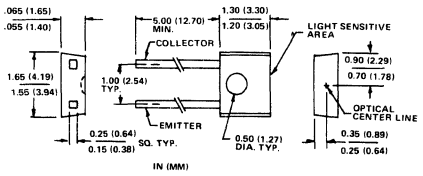

PT56

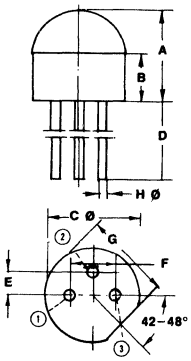

	A	B	C	D	E	F	G	H
PT56	.197 MAX	.100 .108	.200	.500 MIN	.043 .055	.092 .104	.183 .194	.010
PT56b	.200		.210	.500 MIN		.100		.020

PT60

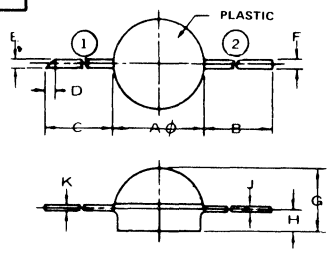

	A	B	C	D	E	F	G	H	J	K
PT60a	.149Ø	.177	.236 MIN.	.013	.024	.024	.130 MAX.	.028	.010	.010

PT63

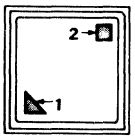

LEAD 3 — ON BOTTOM OF CHIP

PT66

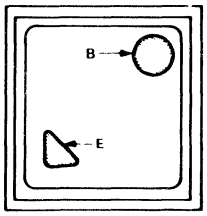

PT69

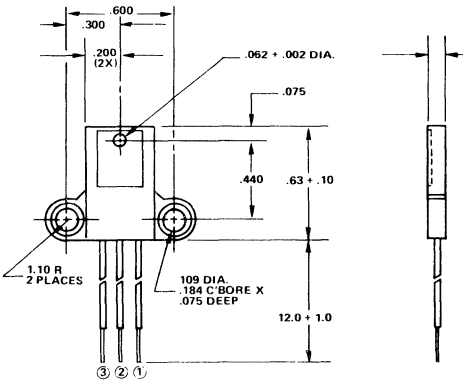

PT71

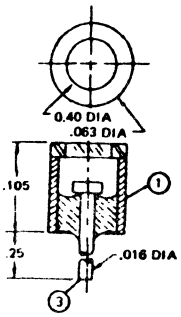

PT72

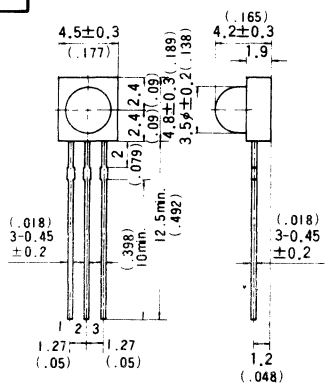

PT76

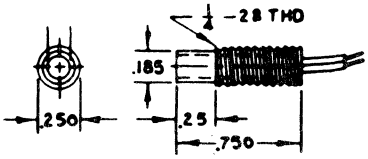

49. OUTLINE DRAWINGS

PT77

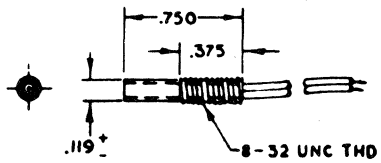

PT78

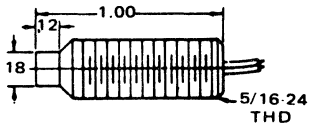

PT82

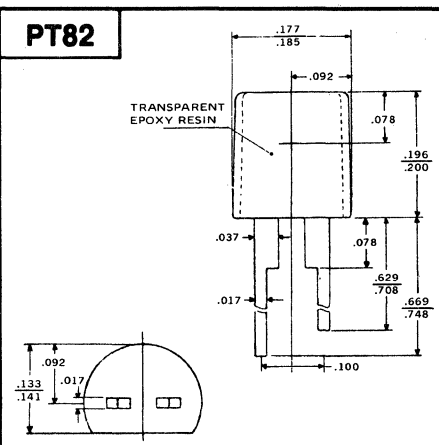

PT83

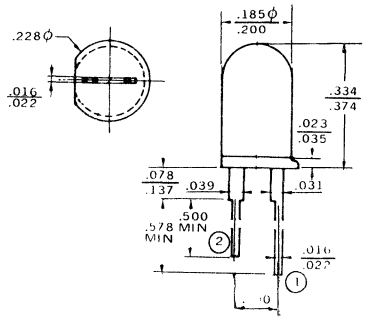

PT84

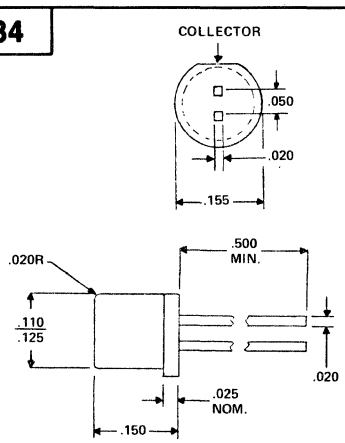

PT99

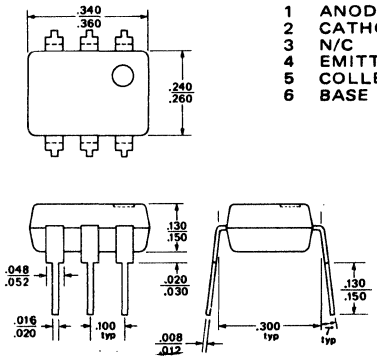

PIN NO.
1 ANODE
2 CATHODE
3 N/C
4 EMITTER
5 COLLECTOR
6 BASE

PT89

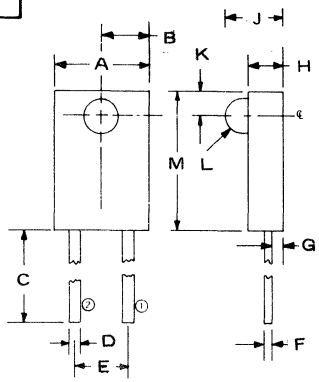

	A	B	C	D	E	F	G	H	J	K	L	M
PT89	.172 .176	.087 NOM	.500 MIN	.018 .022	.100	.018 .022	.014 .018	.062	.094	.043 .047	.031 RAD	.225
PT89a	.170 .180	.082 .092	.500 MIN	.015 .025	.100 NOM	.015 .025	.010 .020	.057 .067	.080 .100	.045 .055	.030 RAD	.225 .235
PT89b	.176 .186	.082 .092	.500 MIN	.015 .025	.100 NOM	.015 .025	.011 .021	.055 .065	.077 .087	.025 .035	.020 RAD	.210 .220
PT89c	.197			.018	.102	.018		.104	.128		.024 RAD	.197

PT93

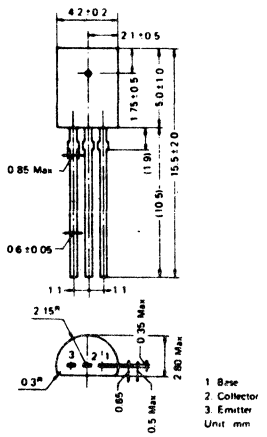

PT105

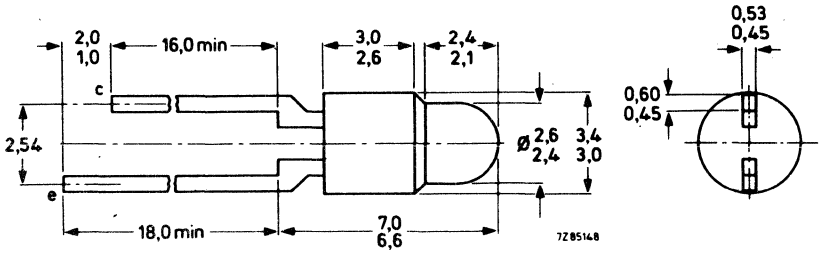

49. OUTLINE DRAWINGS

PT110

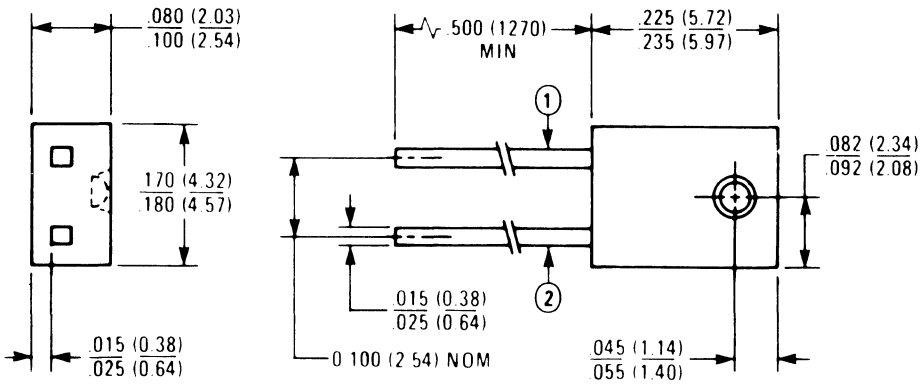

PT109

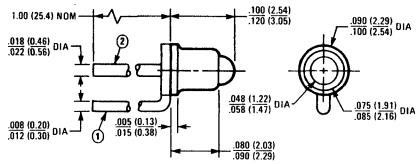

PT111

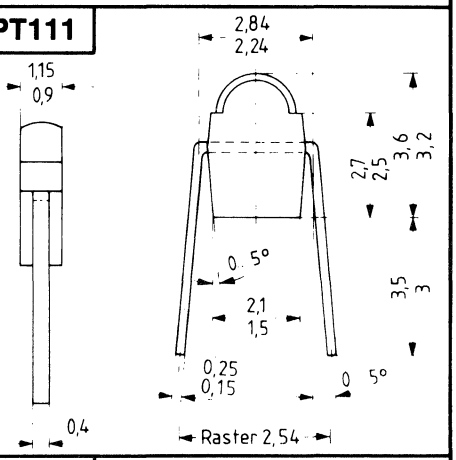

PT113

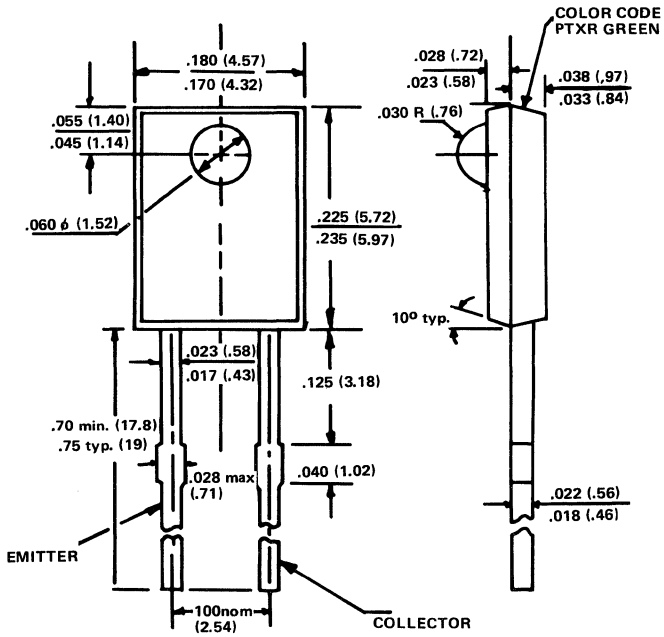

PT101

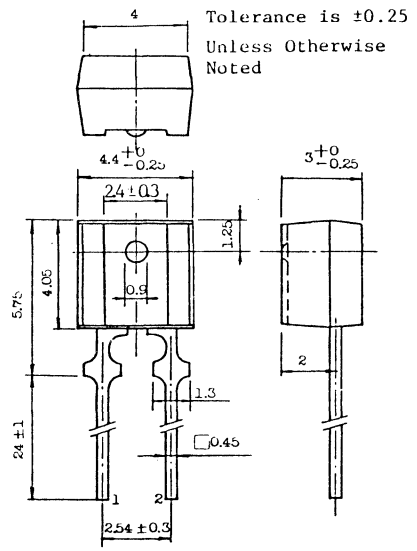

49. OUTLINE DRAWINGS

PT124

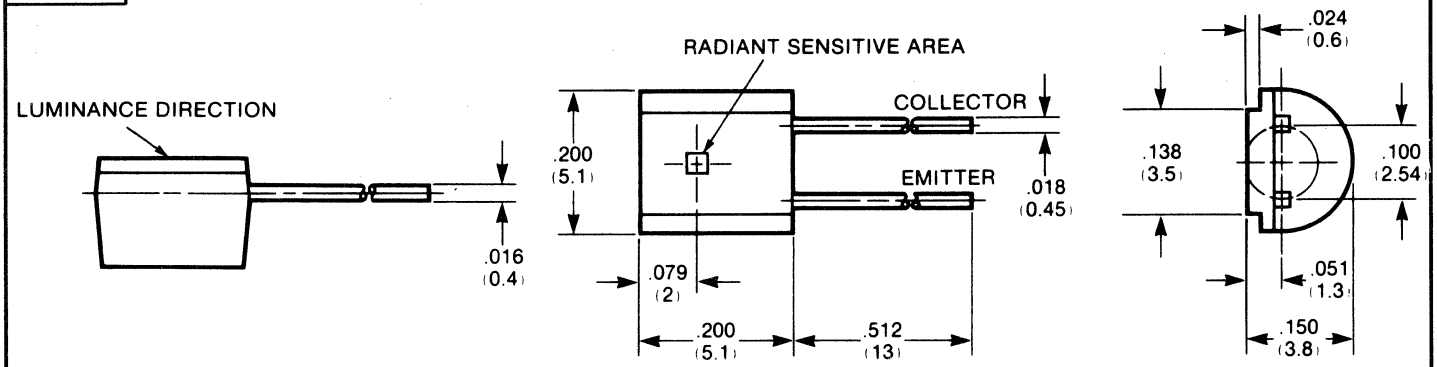

PT125

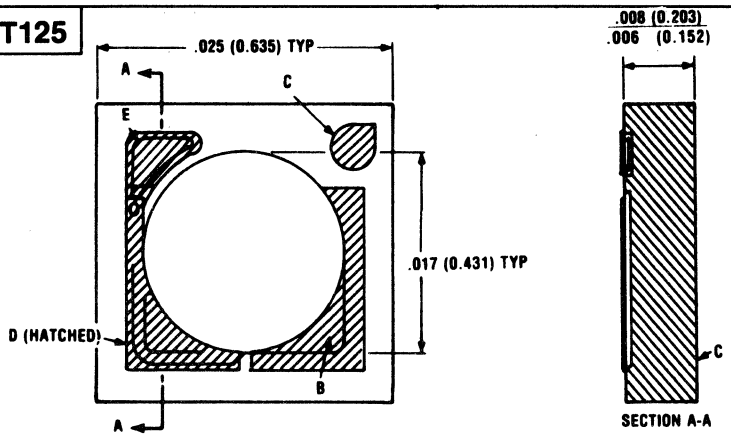

B. Base pad -metallization (aluminum).
C. Collector pad -metallization (aluminum on front side and gold on backside).
D. OP300 metallization (topside) aluminum.
E. Emitter pad -shaded area emitter metallization aluminum.

DIMENSIONS ARE IN INCHES (MILLIMETERS)

PT128

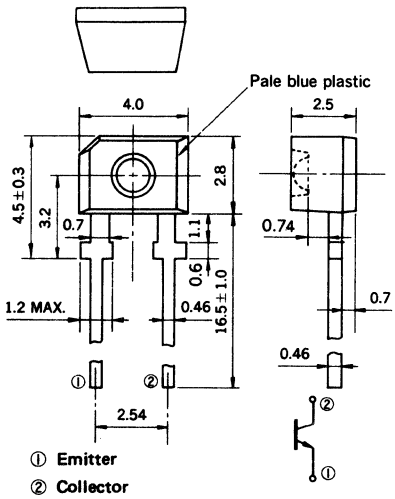

49. OUTLINE DRAWINGS

PT127

Dimensions in mm

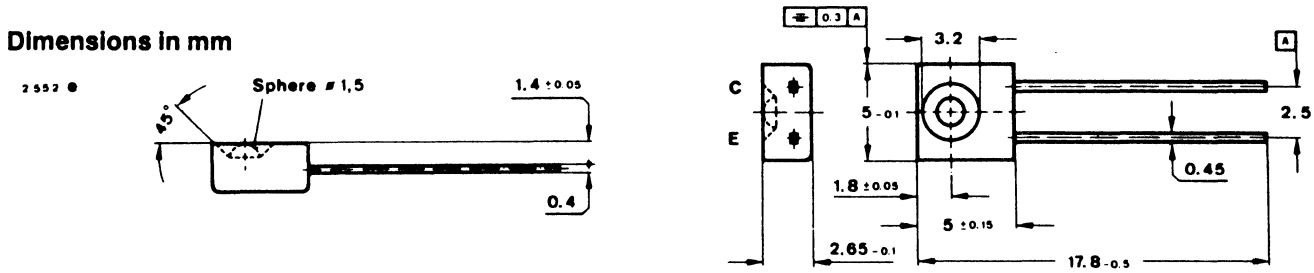

PT129

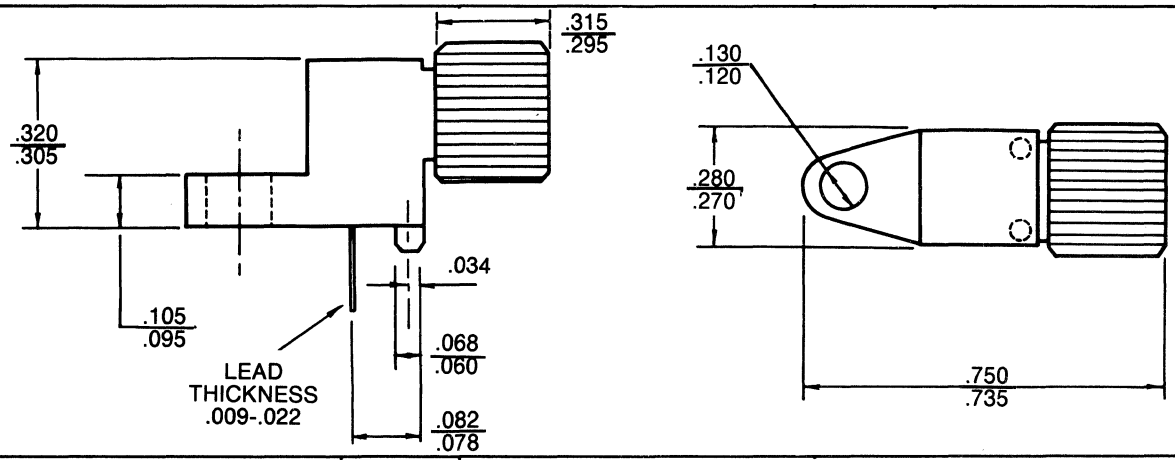

PT130

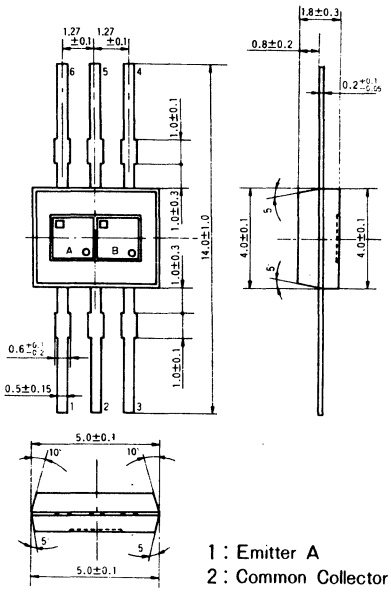

1 : Emitter A
2 : Common Collector
3 : Emitter B
4 : Base B
5 : Common Collector
6 : Base A

PT131

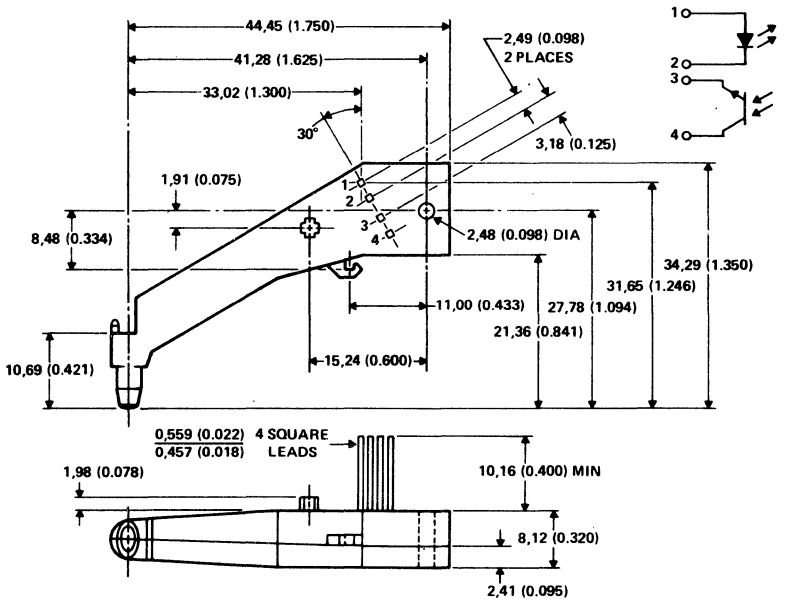

ALL LINEAR DIMENSIONS ARE IN MILLIMETERS AND PARENTHETICALLY IN INCHES

49. OUTLINE DRAWINGS

PT133

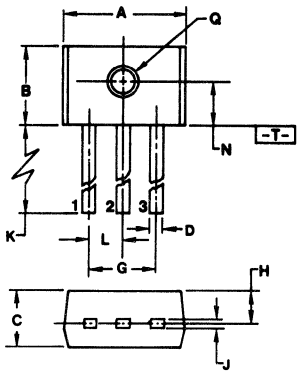

NOTES:
1. DIMENSIONS A, B AND C ARE DATUMS.
2. POSITIONAL TOLERANCE FOR D DIMENSION: ⌖ | ϕ 0.25 (0.010) Ⓜ | T | A Ⓜ | C Ⓜ
3. POSITIONAL TOLERANCE FOR Q DIAMETER: ⌖ | ϕ 0.25 (0.010) Ⓜ | A Ⓜ | C Ⓜ
4. -T- IS A SEATING PLANE.
5. DIMENSIONING AND TOLERANCING PER ANSI 14.5, 1973.

DIM	MILLIMETERS MIN	MILLIMETERS MAX	INCHES MIN	INCHES MAX
A	3.43	4.60	0.135	0.185
B	2.79	3.30	0.110	0.130
C	2.03	3.18	0.080	0.125
D	0.43	0.56	0.017	0.022
G	2.54 BSC		0.100 BSC	
H	1.52 BSC		0.060 BSC	
J	0.23	0.56	0.009	0.022
K	12.70	–	0.500	–
L	1.27 BSC		0.050 BSC	
N	1.78 BSC		0.070 BSC	
Q	0.76	1.52	0.030	0.060

PT134

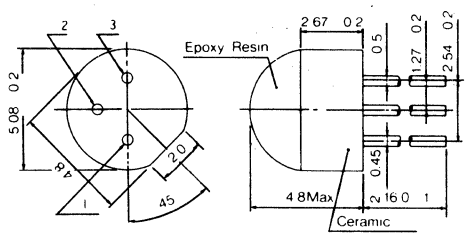

PT135

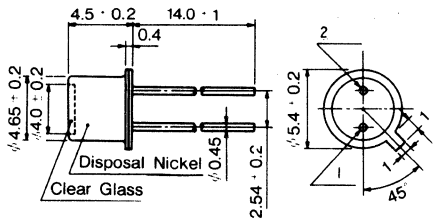

PT136

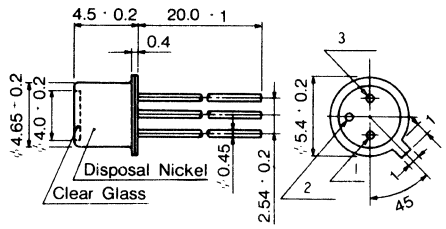

PT137

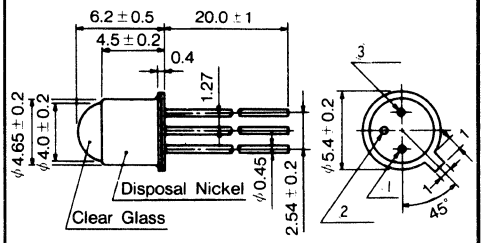

PT138

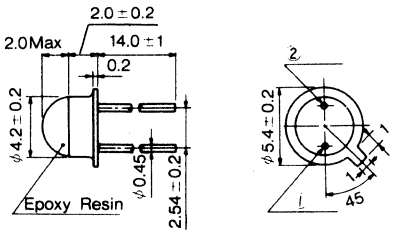

PT139

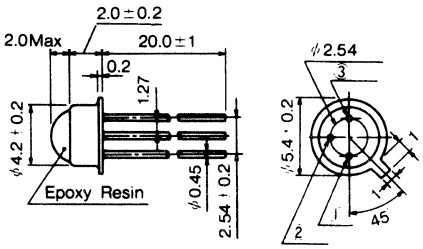

PT140

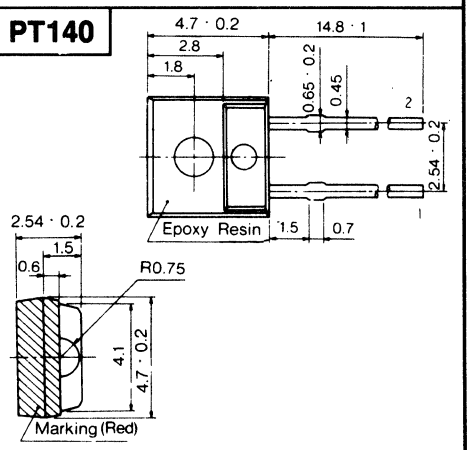

PT141

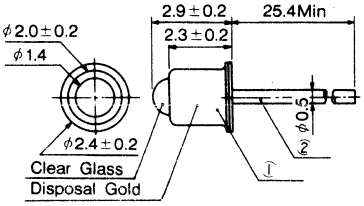

PT149

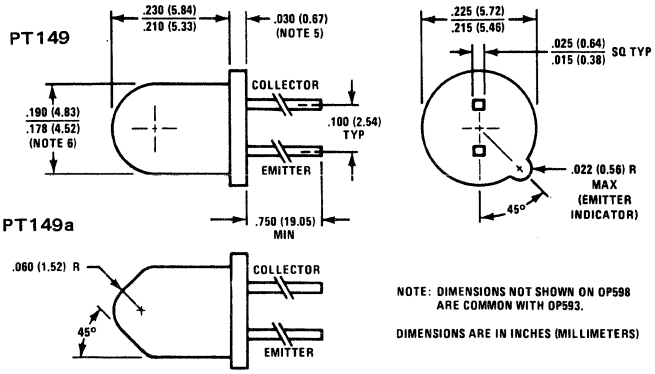

NOTE: DIMENSIONS NOT SHOWN ON OP598 ARE COMMON WITH OP593.

DIMENSIONS ARE IN INCHES (MILLIMETERS)

49. OUTLINE DRAWINGS

PT142

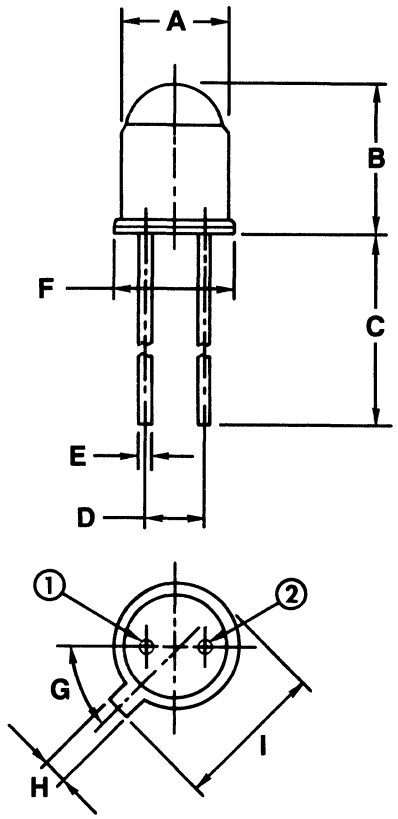

	A	B	C	D	E	F	G	H	I	PIN 1	PIN 2
PT142	.183 DIA	.244	.551	.100	.018 DIA	.211	45°	.039	.252	E	C
PT142a	.181 .189	.256 .264	.539 MAX	.110	.016 .020	.207 .217					

PT144

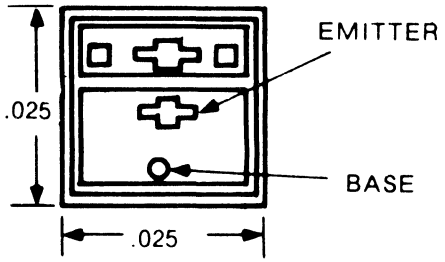

PT145

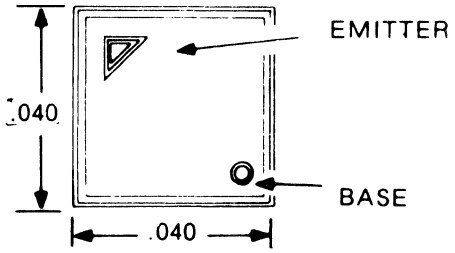

PT146

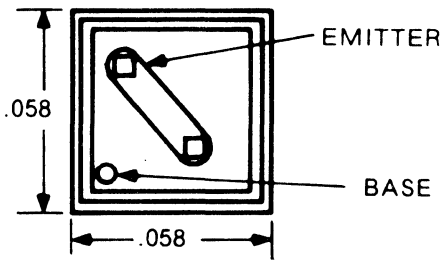

PT143

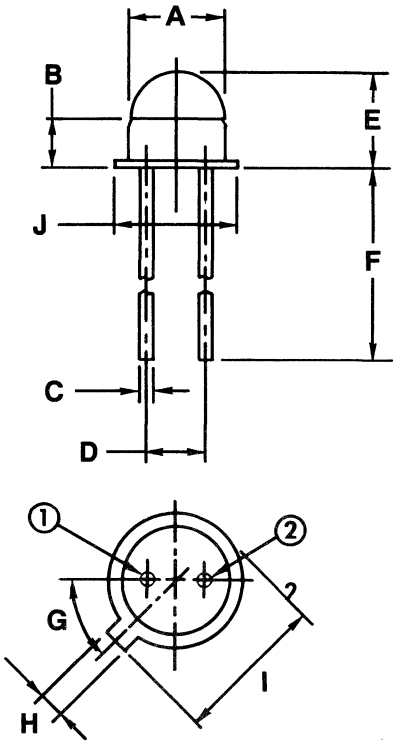

	A	B	C	D	E	F	G	H	I	J
PT143	.165 DIA	.079	.018 DIA	.100	.157	.551	45°	.039	.252	.211

PT147

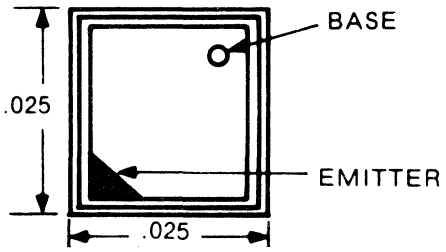

PT148

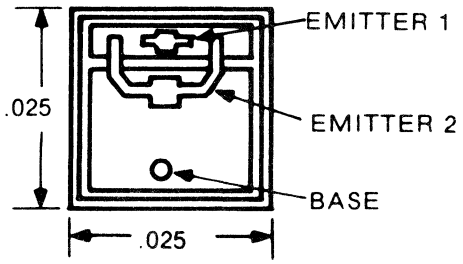

49. OUTLINE DRAWINGS

PT152

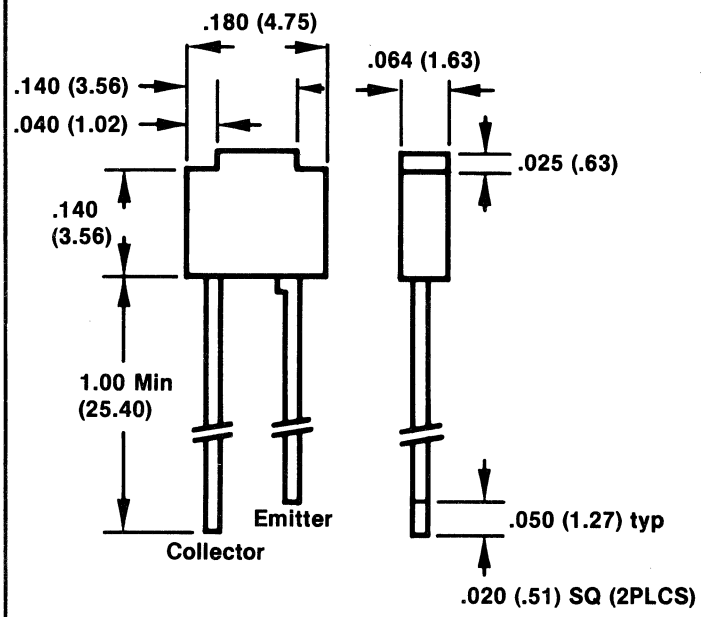

Dimensions are in inches (millimeters)

PT122

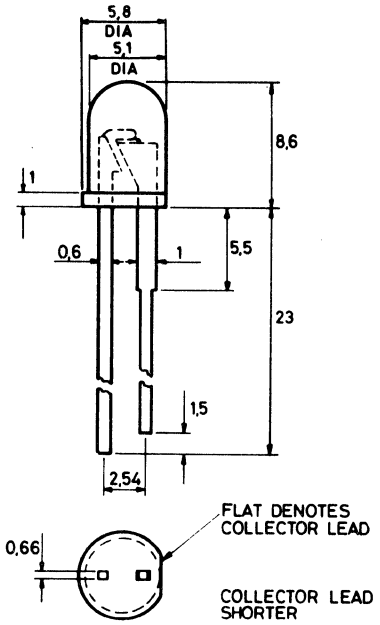

PT151

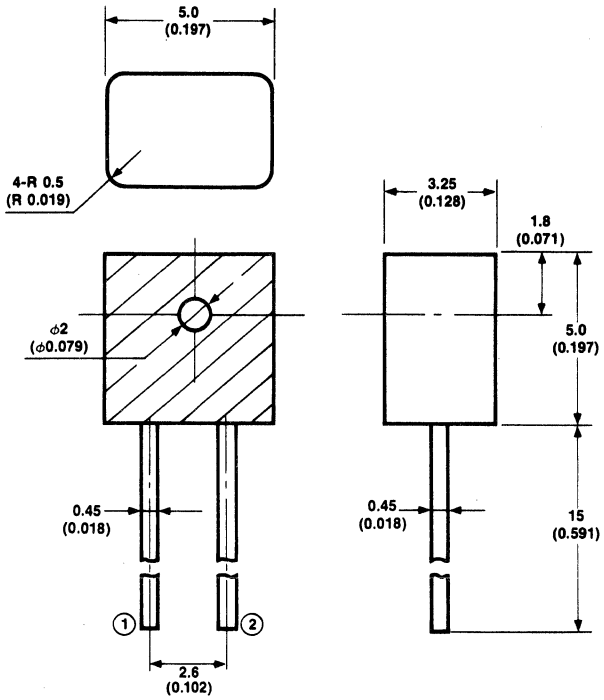

① Emitter
② Collector

Package Dimensions in Millimeters (Inches)

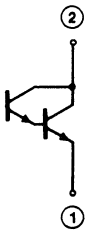

49. OUTLINE DRAWINGS

PT153

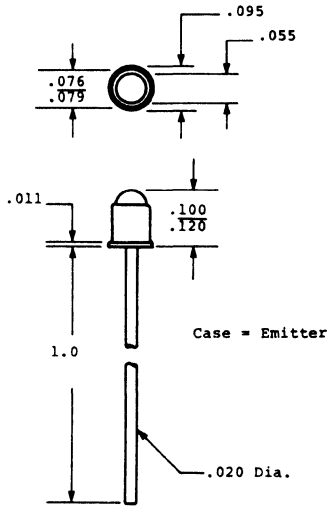

PT154

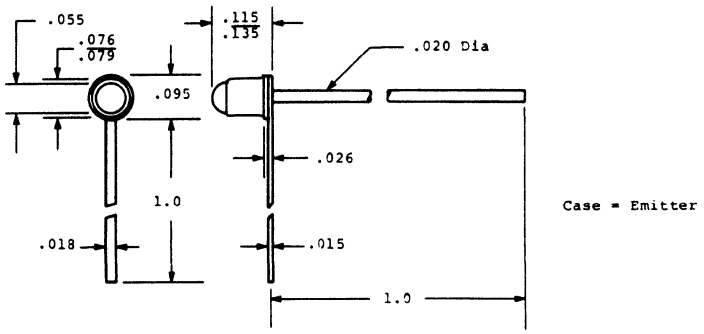

PT155

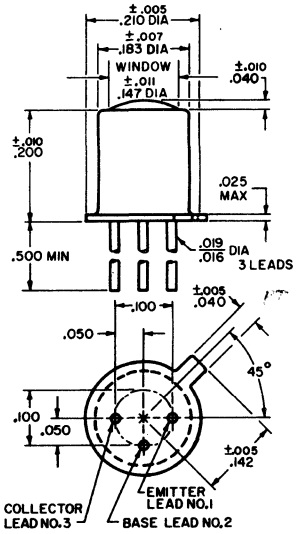

PT156

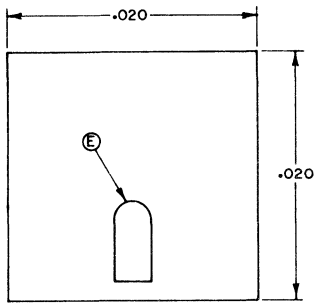

PT157

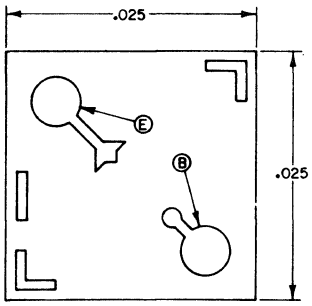

PT158

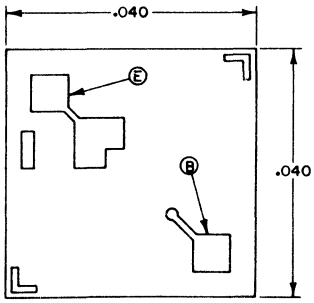

PT159

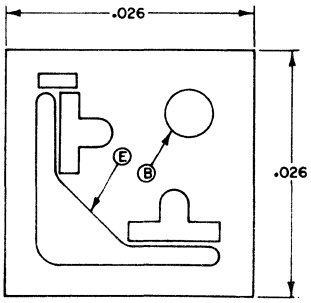

49. OUTLINE DRAWINGS

PV1

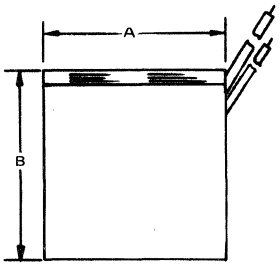

	A	B	THICK	REMARKS
PV1	.767 .807	.770		No Leads
PV1a	.767 .807	.770		6 in.Pigtail Leads
PV1b	.767 .807	.770		.032 in.Wide,3/8 in.Long Ribbon
PV1c	.767 .807	1.140		No Leads
PV1d	.767 .807	1.140		6 in.Pigtail Leads
PV1e	.767 .807	1.140		.032 in.Wide,3/8 in.Long Ribbon
PV1f	.767 .807	1.834 1.880		No Leads
PV1g	.767 .807	1.834 1.880		6 in.Pigtail Leads
PV1h	.767 .807	1.834 1.880		.032 in.Wide,3/8 in.Long Ribbon
PV1k	.540	.880	.050 MAX	Pigtail Leads
PV1m	.640	1.440	.050 MAX	Pigtail Leads
PV1n	.880	1.690	.050 MAX	Pigtail Leads
PV1p	.500	.600	.050 MAX	Pigtail Leads
PV1q	2.000	2.000	.050 MAX	Pigtail Leads
PV1r	.200	.087		No Leads
PV1s	.200	.100		No Leads
PV1t	.200	.200		No Leads
PV1u	.400	.200		No Leads
PV1v	.800	.200		No Leads
PV1w	.400	.400		No Leads
PV1x	.800	.400		No Leads
PV1y	.800	.800		No Leads
PV1z	.200	.087		6 in.Pigtail Leads
PV1aa	.200	.100		6 in.Pigtail Leads
PV1ab	.200	.200		6 in.Pigtail Leads
PV1ac	.400	.200		6 in.Pigtail Leads
PV1ad	.800	.200		6 in.Pigtail Leads
PV1ae	.400	.400		6 in.Pigtail Leads
PV1af	.800	.400		6 in.Pigtail Leads
PV1ag	.800	.800		6 in.Pigtail Leads
PV1ah	.520	.400		No Leads
PV1aj	.800	.520		No Leads
PV1ak	1.120	.400		No Leads
PV1am	1.120	.800		No Leads
PV1an	.840	.400		No Leads
PV1ap	.840	.800		No Leads
PV1aq	1.840	.400		No Leads
PV1ar	1.840	.800		No Leads
PV1as	.520	.400		6 in.Pigtail Leads
PV1at	.800	.520		6 in.Pigtail Leads
PV1au	1.120	.400		6 in.Pigtail Leads
PV1av	1.120	.800		6 in.Pigtail Leads
PV1aw	.840	.400		6 in.Pigtail Leads
PV1ax	.840	.800		6 in.Pigtail Leads
PV1ay	1.840	.400		6 in.Pigtail Leads
PV1az	1.840	.800		6 in.Pigtail Leads
PV1ba	.393	.787	.025	6 in.Leads
PV1bb	.393	.393	.025	6 in.Leads
PV1bc	.393	.196	.025	6 in.Leads
PV1bd	.196	.787	.025	6 in.Leads
PV1be	.196	.393	.025	6 in.Leads
PV1bf	.196	.196	.025	6 in.Leads
PV1bg	.196	.098	.025	6 in.Leads
PV1bh	.787	.787	.025	6 in.Leads
PV1bj	.196	.984	.025	6 in.Leads
PV1bv	.197	.197		No Leads
PV1bw	.394	.197		No Leads
PV1bx	.787	.197		No Leads
PV1by	.197	.394		No Leads
PV1bz	.394	.394		No Leads
PV1ca	.787	.394		No Leads

PV2

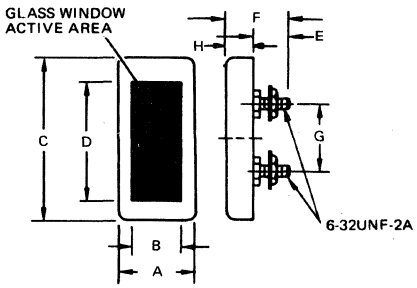

	A	B	C	D	E	F	G	H
PV2	1.120	.750	2.2	1.600	.400	.840	1.00	
PV2a	1.100	.700	2.2	1.600	.400		.600	.300

PV3

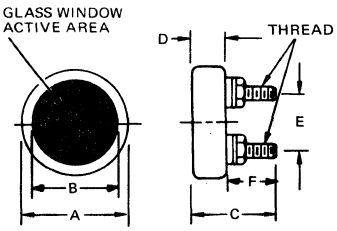

	A	B	C	D	E	F	THREAD
PV3	1.250		.875	.375	.625		8-32UNF2A
PV3a	1.200	1.100		.300	.600	.400	6-32
PV3b	1.900	1.700		.300	.600	.400	6-32

PV4

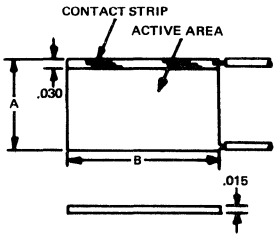

	A	B	REMARKS
PV4	.200	.200	Without Pigtail Leads
PV4a	.200	.400	Without Pigtail Leads
PV4b	.200	.800	Without Pigtail Leads
PV4c	.400	.200	Without Pigtail Leads
PV4d	.400	.400	Without Pigtail Leads
PV4e	.400	.800	Without Pigtail Leads
PV4f	.800	.200	Without Pigtail Leads
PV4g	.800	.400	Without Pigtail Leads
PV4h	.800	.800	Without Pigtail Leads
PV4j	.200	.200	As Shown
PV4k	.200	.400	As Shown
PV4m	.200	.800	As Shown
PV4n	.400	.200	As Shown
PV4p	.400	.400	As Shown
PV4q	.400	.800	As Shown
PV4r	.800	.200	As Shown
PV4s	.800	.400	As Shown
PV4t	.800	.800	As Shown
PV4u	.200	.200	6 Inch Pigtail Leads Blue Lead Positive
PV4v	.100	.200	6 Inch Pigtail Leads Blue Lead Positive
PV4w	.390	.390	6 Inch Pigtail Leads Blue Lead Positive
PV4x	.390	.785	6 Inch Pigtail Leads Blue Lead Positive

PV5

	DIA	THICK	REMARKS
PV5	.250	.050 MAX	Leads As Shown
PV5a	.380	.050 MAX	Leads As Shown
PV5b	1.130	.050 MAX	Leads As Shown
PV5c	1.750	.050 MAX	Leads As Shown
PV5d	2.000	.050 MAX	Leads As Shown
PV5e	1.125		No Leads
PV5f	1.125		6 in.Pigtail or #32 AWG Leads
PV5g	1.77		w/Leads
PV5h	1.18		w/Leads

PV6

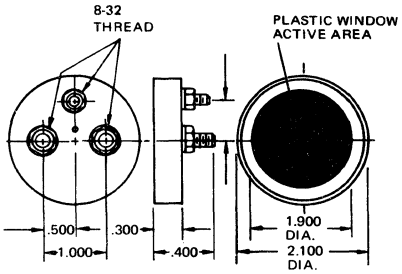

PV7

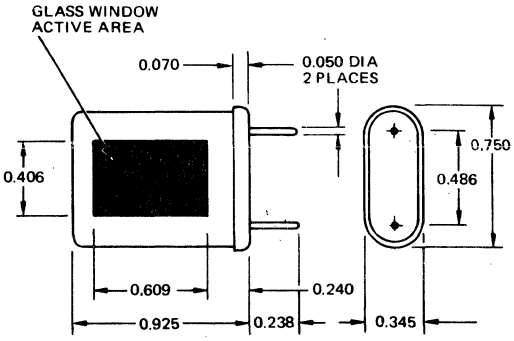

49. OUTLINE DRAWINGS

PV8

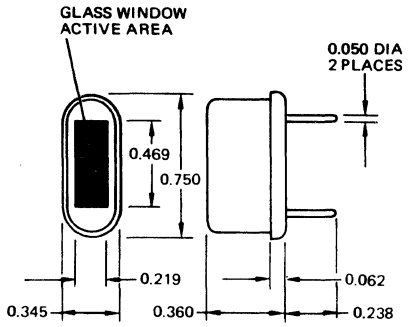

PV9

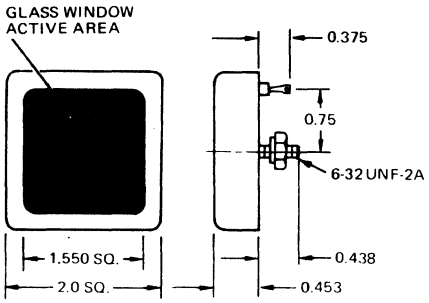

PV10

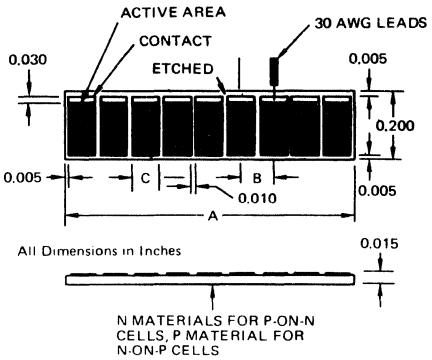

	A	B	C	REMARKS
PV10	.087	.087	.077	With Baseplate
PV10a	.174	.087	.077	With Baseplate
PV10b	.261	.087	.077	With Baseplate
PV10c	.348	.087	.077	With Baseplate
PV10d	.435	.087	.077	With Baseplate
PV10e	.522	.087	.077	With Baseplate
PV10f	.609	.087	.077	With Baseplate
PV10g	.696	.087	.077	With Baseplate
PV10h	.783	.087	.077	With Baseplate
PV10j	.870	.087	.077	With Baseplate
PV10k	.100	.100	.090	With Baseplate
PV10m	.200	.100	.090	With Baseplate
PV10n	.300	.100	.090	With Baseplate
PV10p	.400	.100	.090	With Baseplate
PV10q	.500	.100	.090	With Baseplate
PV10r	.600	.100	.090	With Baseplate
PV10s	.700	.100	.090	With Baseplate
PV10t	.800	.100	.090	With Baseplate
PV10u	.900	.100	.090	With Baseplate
PV10v	1.000	.100	.090	With Baseplate
PV10w	.087	.087	.077	With Baseplate and Pigtail Lead
PV10x	.174	.087	.077	With Baseplate and Pigtail Lead
PV10y	.261	.087	.077	With Baseplate and Pigtail Lead
PV10z	.348	.087	.077	With Baseplate and Pigtail Lead
PV10aa	.435	.087	.077	With Baseplate and Pigtail Lead
PV10ab	.522	.087	.077	With Baseplate and Pigtail Lead
PV10ac	.609	.087	.077	With Baseplate and Pigtail Lead
PV10ad	.696	.087	.077	With Baseplate and Pigtail Lead
PV10ae	.783	.087	.077	With Baseplate and Pigtail Lead
PV10af	.870	.087	.077	With Baseplate and Pigtail Lead
PV10ag	.100	.100	.090	With Baseplate and Pigtail Lead
PV10ah	.200	.100	.090	With Baseplate and Pigtail Lead
PV10aj	.300	.100	.090	With Baseplate and Pigtail Lead
PV10ak	.400	.100	.090	With Baseplate and Pigtail Lead
PV10am	.500	.100	.090	With Baseplate and Pigtail Lead
PV10an	.600	.100	.090	With Baseplate and Pigtail Lead
PV10ap	.700	.100	.090	With Baseplate and Pigtail Lead
PV10aq	.800	.100	.090	With Baseplate and Pigtail Lead
PV10ar	.900	.100	.090	With Baseplate and Pigtail Lead
PV10as	1.000	.100	.090	With Baseplate and Pigtail Lead
PV10at	.087	.087	.077	With Pigtail Lead
PV10au	.174	.087	.077	With Pigtail Lead
PV10av	.261	.087	.077	With Pigtail Lead
PV10aw	.348	.087	.077	With Pigtail Lead
PV10ax	.435	.087	.077	With Pigtail Lead
PV10ay	.522	.087	.077	With Pigtail Lead
PV10az	.609	.087	.077	With Pigtail Lead
PV10ba	.696	.087	.077	With Pigtail Lead
PV10bb	.783	.087	.077	With Pigtail Lead
PV10bc	.870	.087	.077	With Pigtail Lead
PV10bd	.100	.100	.090	With Pigtail Lead
PV10be	.200	.100	.090	With Pigtail Lead
PV10bf	.300	.100	.090	With Pigtail Lead
PV10bg	.400	.100	.090	With Pigtail Lead
PV10bh	.500	.100	.090	With Pigtail Lead
PV10bj	.600	.100	.090	With Pigtail Lead
PV10bk	.700	.100	.090	With Pigtail Lead
PV10bm	.800	.100	.090	With Pigtail Lead
PV10bn	.900	.100	.090	With Pigtail Lead
PV10bp	1.000	.100	.090	With Pigtail Lead

PV11

	A	B
PV11	.250	.484
PV11a	.440	.730
PV11b	.625	.765
PV11c	1.118	.622
PV11d	1.160	.654
PV11e	.875	.535
PV11f	.875	.843
PV11g	.875	.875
PV11h	1.459	.640
PV11j	1.118	.890
PV11k	1.500	1.500
PV11m	1.937	1.437
PV11n	.281	.875
PV11p	4.188	.250
PV11q	5.859	.500
PV11r	6.000	.437
PV11s	1.689	.886
PV11t	6.000	.250

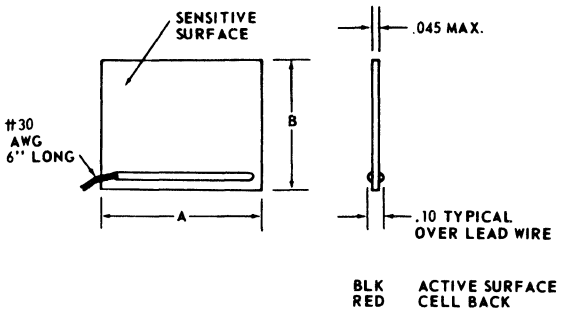

PV12

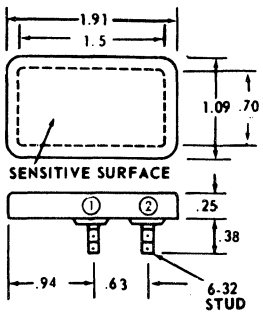

PV13

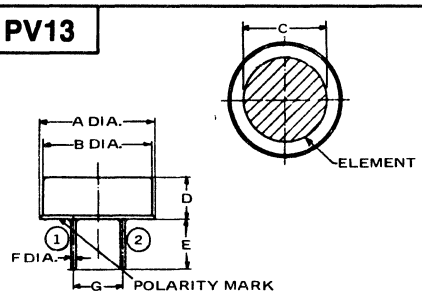

	A	B	C	D	E	F	G
PV13	1.270	1.100	.810	.260	.500	.040	.750
PV13a	1.083	1.024		.394	.472	.039	.472
PV13b	.550	.486	.430	.210	1.500	.019	.295
PV13c	.591	.472	.295	.276	.590	.030	.224
PV13d	.551	.489	.426	.201	1.181	.018	.291

PV14

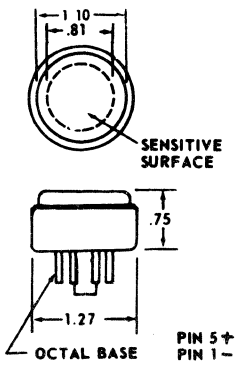

PV15

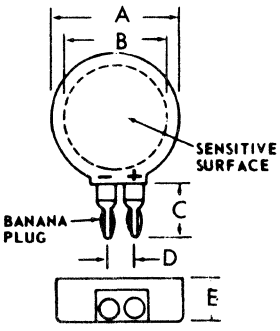

	A	B	C	D	E
PV15	1.750	1.310	.940	.500	.750
PV15a	2.250	1.750	.940	.500	.750

PV16

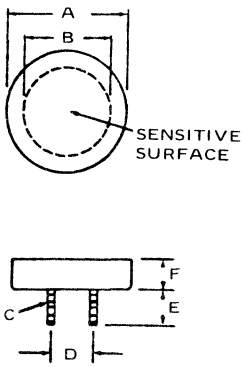

	A	B	C	D	E	F
PV16	1.75	1.31	6-32	.630	.500	.410
PV16a	2.00	1.50	8-32	1.00	.680	.440

49. OUTLINE DRAWINGS

PV18

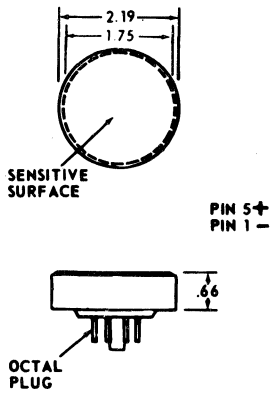

PV19

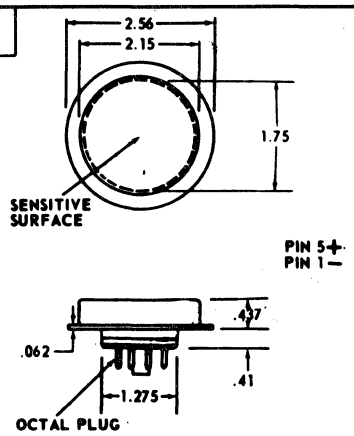

PV27

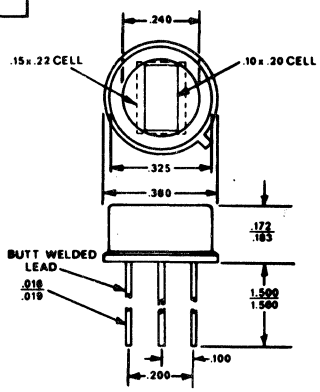

PV33

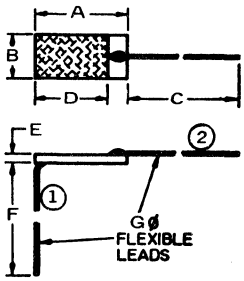

	A	B	C	D	E	F	G
PV33	.176 .192	.076 .092	1.750 MIN	.130 .170	.025 MAX	1.750 MIN	.008
PV33a	.242 .258	.742 .758	1.750 MIN	.185 .225	.025 MAX	1.750 MIN	.008
PV33b	.242 .258	.992 1.008	1.750 MIN	.185 .225	.025 MAX	1.750 MIN	.008

PV34

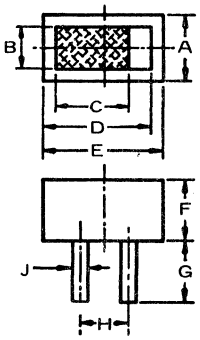

	.080	.056	.120	.140	.181	.133	.135	.103	MAX

PV35

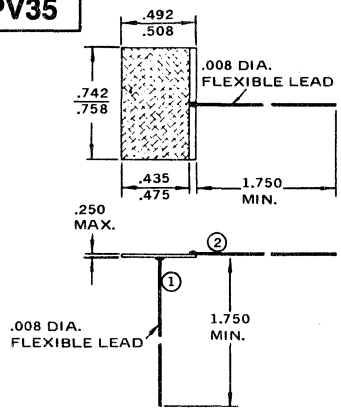

PV36

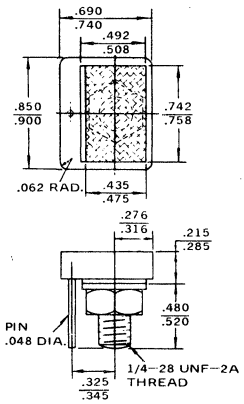

PV37

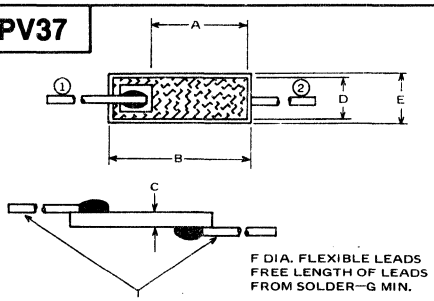

	A	B	C	D	E	F	G
PV37	.403	.449	.025	.064	.079	.007	1.732
PV37a	.063 .103	.117 .133	.025	.038	.037 .052	.007	1.732
PV37b	.086	.125 .137	.010	.037	.043 .055	.005	1.181
PV37c	.137	.173 .185	.010	.070	.074 .086	.005	1.181

PV38

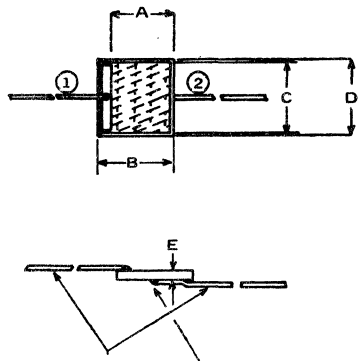

	A	B	C	D	E	F	G
PV38	.187 .227	.242 .257	.242	.242 .257	.025	.007	1.732
PV38a	.187 .227	.244 .259	.492	.492 .507	.025	.007	1.732

PV39

Dimension (A): To determine overall length, multiply center-to-center spacing by number of channels and subtract .020

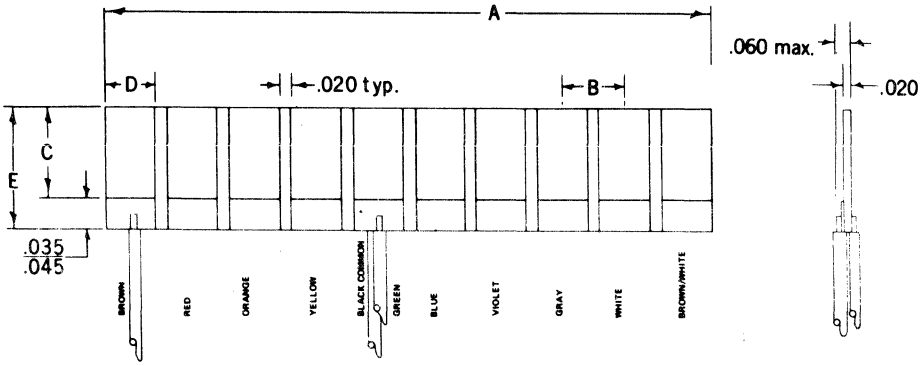

49. OUTLINE DRAWINGS

PV41

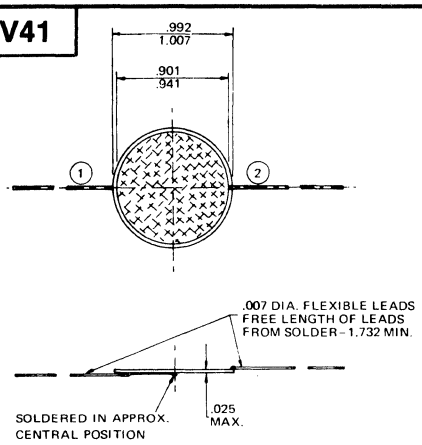

PV42

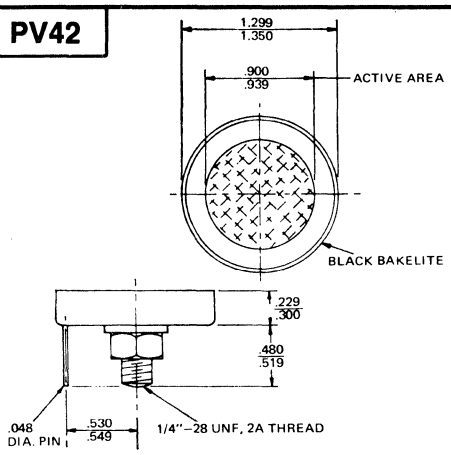

PV43

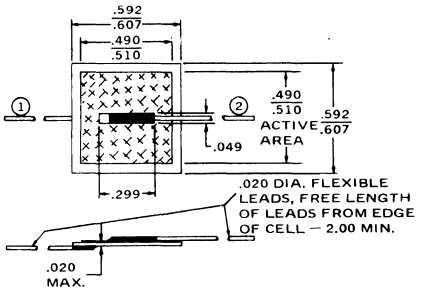

PV50

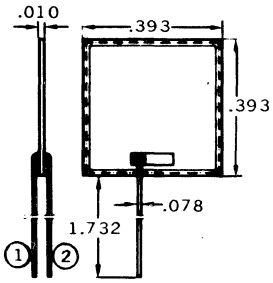

PV51

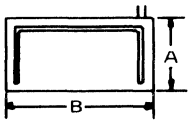

	A	B
PV51	.710	1.50
PV51a	1.02	.532
PV51b	1.14	1.46

PV52

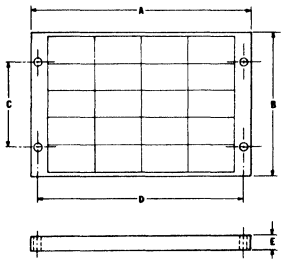

	A	B	C	D	E
PV52	5.750	4.820	2.820	5.150	.440
PV52a	7.710	4.820	2.820	7.250	.440
PV52b	8.000	7.000	4.000	7.400	.440
PV52c	14.50	3.60	2.75	13.00	.440

PV53

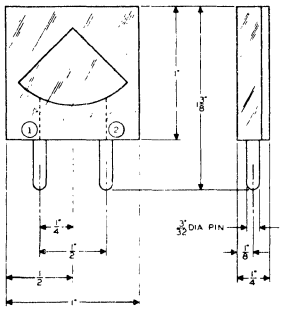

PV54

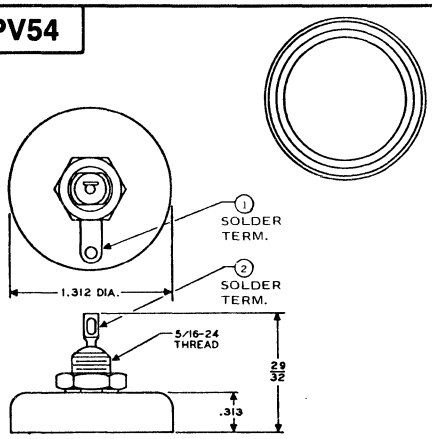

PV55

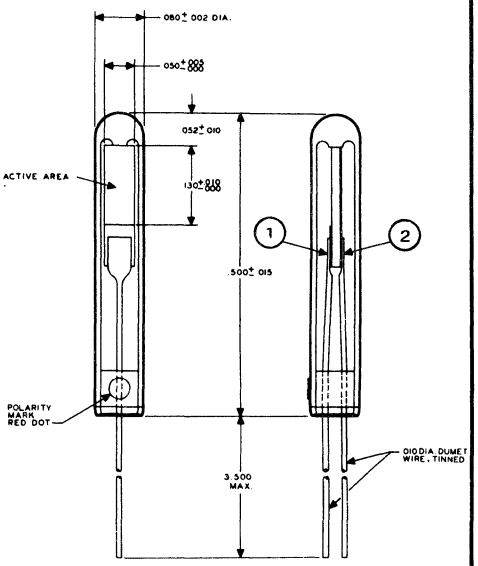

PV56

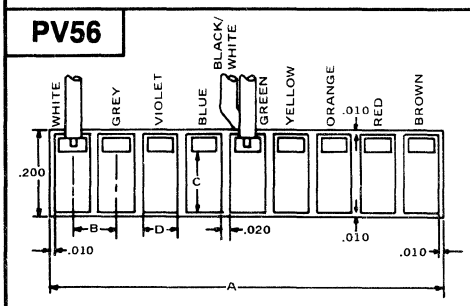

	NO OF POSITIONS	A	B	C	D
PV56	4	0.400	0.100	.140	.080
PV56a	5	0.500	0.100	.140	.080
PV56b	6	0.600	0.100	.140	.080
PV56c	7	0.700	0.100	.140	.080
PV56d	8	0.800	0.100	.140	.080
PV56e	9	0.900	0.100	.140	.080
PV56f	10	1.000	0.100	.140	.080

PV57

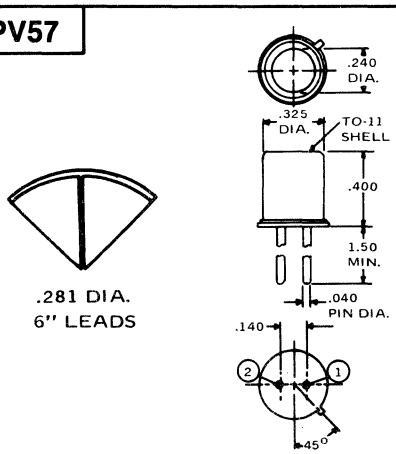

49. OUTLINE DRAWINGS

PV58

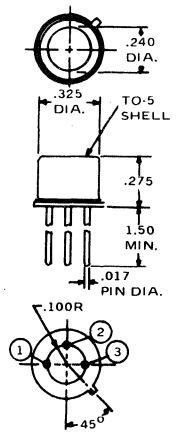

PV60

PV61

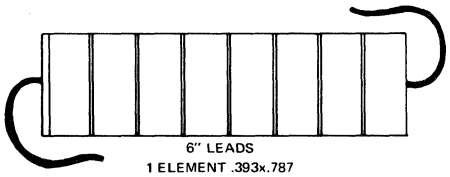

PV62

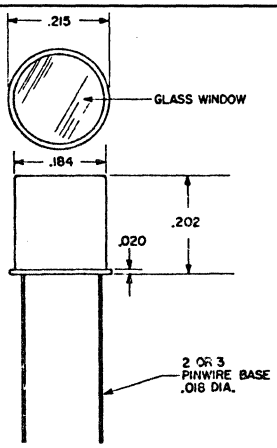

PV63

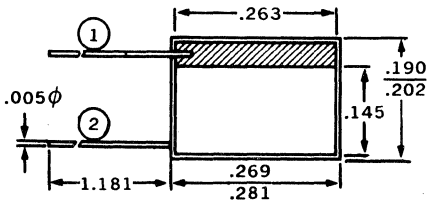

SLICE THICKNESS .010 IN.

PV67

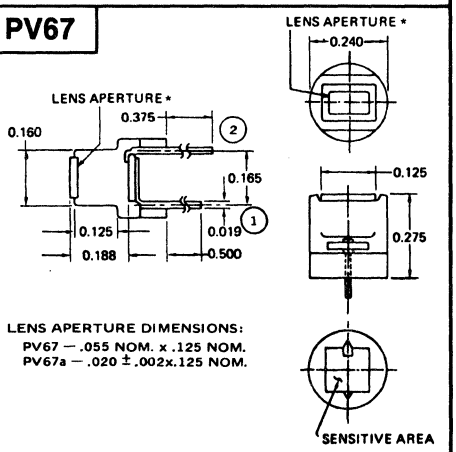

LENS APERTURE DIMENSIONS:
PV67 — .055 NOM. x .125 NOM.
PV67a — .020 ± .002x.125 NOM.

PV68

	L	T	W
PV68	.080	.060	.080
PV68a	.200	.060	.080
PV68b	.200	.060	.100

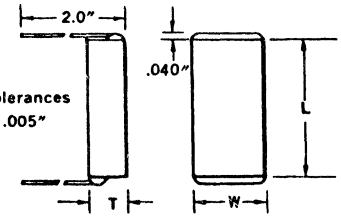

1) All standard units have T = .060"
2) Insulated leads have black = neg. and red = positive.
Silver leads have equivalent end markings.

PV69

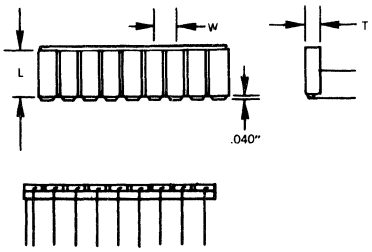

ALL TOLERANCES = ± .005 IN.

	L	T	W	SEGMENT NO
PV69	.200	.100	.060	9 or 12
PV69a	.200	.080	.060	9 or 12
PV69b	.080	.080	.060	9 or 12

PV71

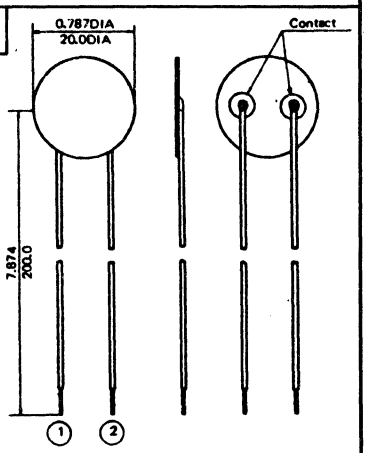

PV73

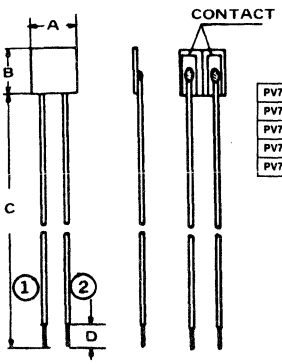

	A	B	C	D
PV73	.197	.197	7.677	
PV73a	.394	.394	7.48	.394
PV73b	.787	.394	7.48	.394
PV73c	.394	.157	7.717	
PV73d	.177	.118	7.756	

PV74

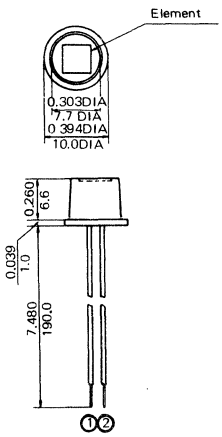

PV75

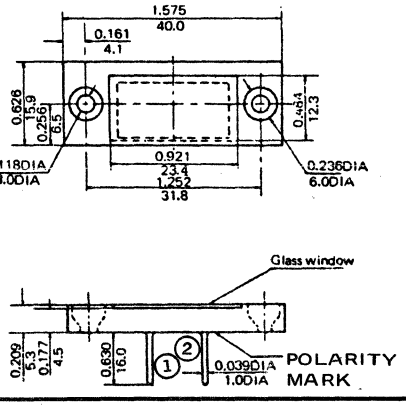

49. OUTLINE DRAWINGS

PV76

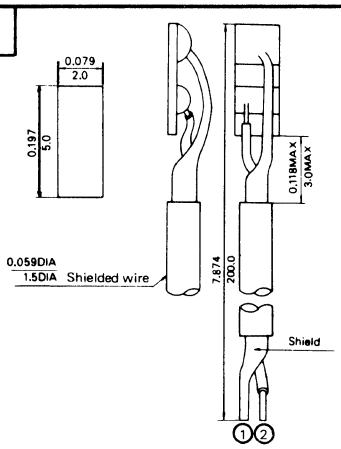

PV86

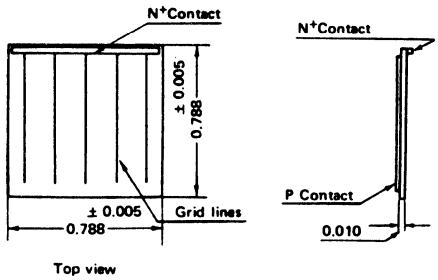

PV89

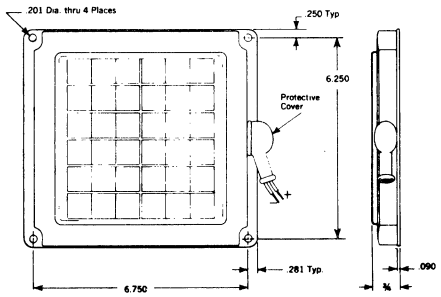

PV90

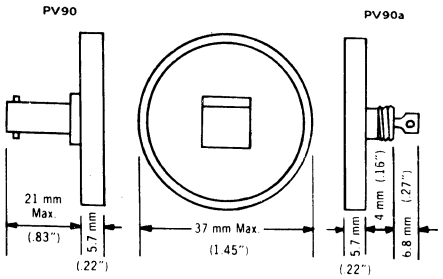

PV94

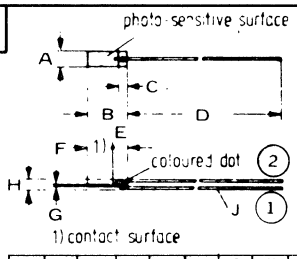

	A	B	C	D	E	F	G	H	J
PV94	.066 .082	.173 .188	.039 MAX	1.18	.066	.106 MIN	.011 .019	.059 MAX	
PV94b	.488 .503	.235 .251	.039 MAX	2.95 MIN	.098 MAX	.137 MIN	.011 .019	.059 MAX	.011
PV94d	.236 .251	.236 .251	.039 MAX	2.95 MIN	.098 MAX	.137 MIN	.011 .019	.059 MAX	.011
PV94e	.708 .866	.385 .401	.039 MAX	1.574 MIN	.098 MAX	.287 MIN	.011 .019	.059 MAX	.011
PV94f	.079 .087	.173 .189	.040 MAX	1.18 1.22	.067 MAX	.106 MIN	.012 .020	.059 MAX	.008 TYP

PV95

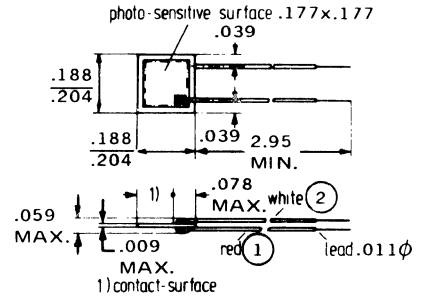

PV98

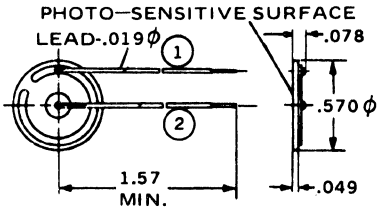

PV99

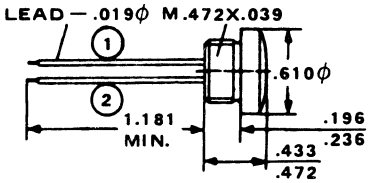

PV105

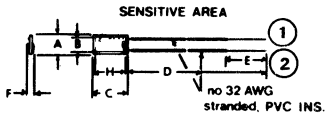

	A	B	C	D	E	F	H	LEAD1	LEAD2
PV105	.095 .105	.080 .090	.195 .205	6.00 NOM	.150 .300	.030 .060	.150 .160	Red(+)	Black(−)
PV105a	.190 .210	.150 .160	.990 1.01	6.00 NOM	.156 .218	.030 .050	.975 .995	Black(−)	Red(+)
PV105b	.090 .110	.050 .060	.990 1.01	6.00 NOM	.156 .218	.030 .050	.975 .995	Black(−)	Red(+)

PV106

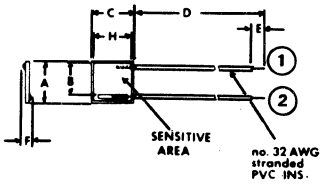

	A	B	C	D	E	F	H	LEAD1	LEAD2
PV106	.185 .195	.145 .155	.185 .195	6.00 NOM	.150 .250	.030 .050	.170 .180	Red(+)	Black(−)
PV106a	.195 .205	.152 .162	.390 .410	6.00 NOM	.150 .250	.030 .050	.375 .390	Black(−)	Red(−)

PV104

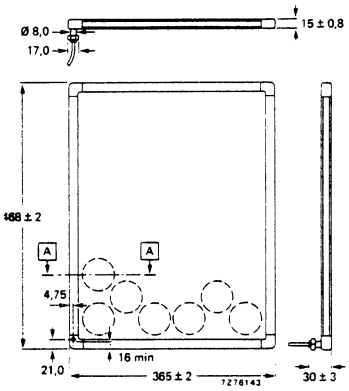

Dimensions in mm

Panel thickness 15 mm

Cable
- length 1 m
- diameter 5,5 mm
- collar diameter 17 mm
- core diameter (two wires) 1,8 mm

Polarity indications:
- black = −
- red = +

Mass: 2,4 kg

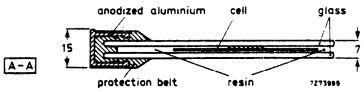

49. OUTLINE DRAWINGS

PV107

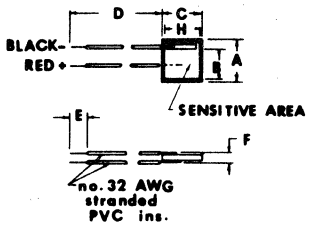

Dims.	Inches		Millimeters	
Ref	Min.	Max.	Min.	Max.
A	.390	.410	10.0	10.4
B	.334	.364	8.4	9.2
C	.390	.410	10.0	10.4
D	6.0 Nom.		152. Nom.	
E	.19 Nom.		4.9 Nom.	
F	.040	.050	1 02	1.28
H	.375	.385	9.4	9.8

PV108

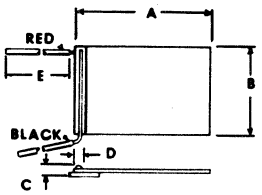

Dims.	Inches		Millimeters	
Ref.	Min.	Max.	Min.	Max.
A	.750	.770	19.02	19.72
B	.349	.359	9.85	9.18
C	.050	.060	1.21	1.41
D	.040	.050	1.01	1.21
E	6.0 Min. (Leads)		152. Min. (Leads)	

PV109

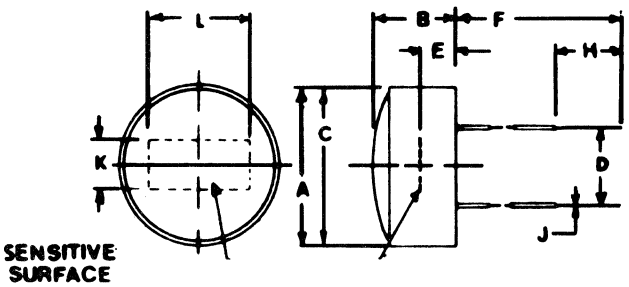

Dims.	Inches		Millimeters	
Ref.	Min.	Max.	Min.	Max.
A	.355	.365	9.20	9.28
B	.320	.330	8.13	8.38
C	.180	.190	4.58	4.82
D	.235	.245	5.98	6.22
E	.145	.155	3.69	3.92
F	.085	.095	2.15	2.41
H	1.50	1.60	38.	40.8
J	.016	.019	.41	.48
K	.235	.245	5.98	6.22

PV110

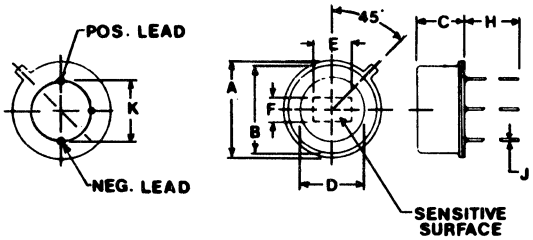

Dims.	Inches		Millimeters	
Ref.	Min.	Max.	Min.	Max.
A	.497	.512	12.8	13.0
B	.270	.290	6.85	7.38
C	.460	.470	11.75	12.00
D	.285	.305	7.22	7.75
E	.130	.150	3.32	3.8
F	6.0 Nom.		152.0 Nom.	
H	.19 Nom.		5. Nom.	
J	No. 32 AWG 7 Strand PVC			
K	.180	.200	4.58	5.08
L	.380	.400	9.68	10.25

PV111

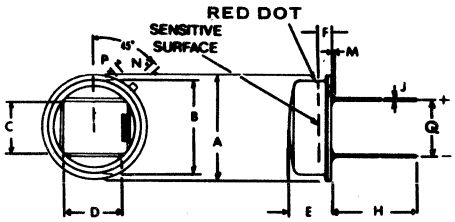

	A	B	C	D	E	F	H	J	Q	M	N	P
PV111	.355 .365	.320 .330	.130 .140	.150 .160	.180 .190	.085 .095	1.50 1.60	.016 .019	.195 .205	.025	.026 .037	.035 .045
PV111a	.545 .555	.481 .491	.185 .195	.145 .155	.200 .226	.031 .101	1.50 1.60	.016 .019	.290 .300	.025		
PV111b	.545 .555	.481 .491	.245 .255	.245 .255	.200 .226	.091 .101	1.50 1.60	.016 .019	.290 .300	.025		

PV113

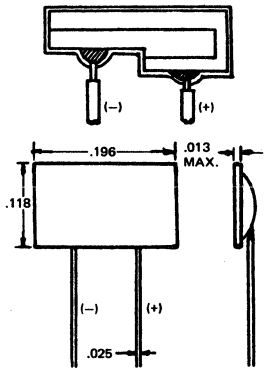

49. OUTLINE DRAWINGS

PV124

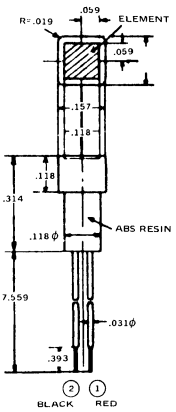

PV136

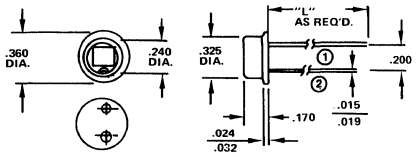

PV141

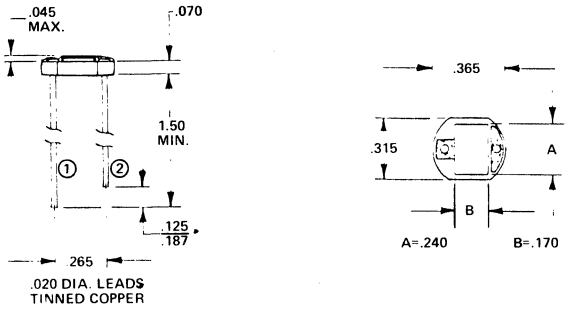

PV142

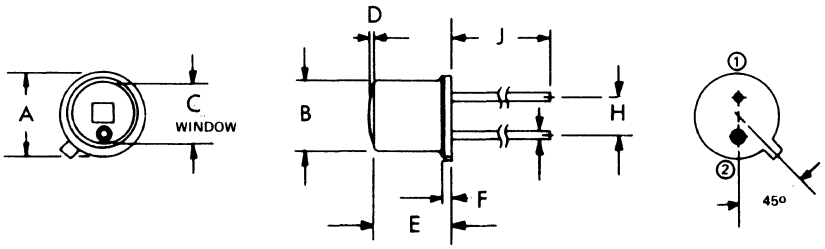

	A	B	C	D	E	F	G	H	J
PV142	.210	.183	.155	.010 MAX	.200	.025 MAX	.015 .019	.100	1.00 MIN
PV142a	.362	.318	.232	.055	.161		.017	.200	.708 MIN
PV142b	.212	.185	.118	.051	.141		.017	.098	.511 MIN
PV142c	.358	.299		.059	.157		.017	.200	.708 MIN
PV142d	.210	.183	.155		.240	.025 MAX	.015 .019	.100	1.00 MIN
PV142e	.210	.165	.165		.045		.017	.100	1.10

PV145

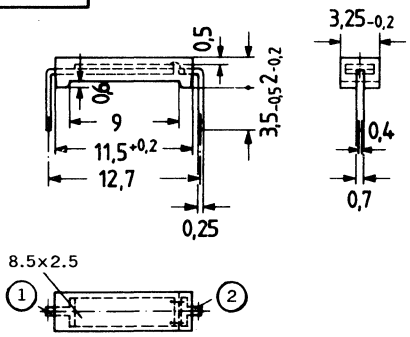

DIMENSIONS IN "MM"

49. OUTLINE DRAWINGS

PV147

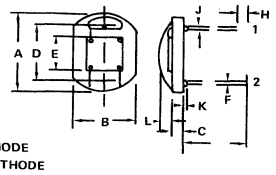

REF	INCHES		MILLIMETERS	
	MIN	MAX	MIN	MAX
A	.357	.367	9.05	9.32
B	.303	.313	7.70	7.94
C	.065	.075	1.66	1.92
D	.260	.270	6.61	6.86
E	.195	.205	4.90	5.22
F	.019	.021	.049	.053
H	.124	.188	3.17	4.78
J	.035	.045	.09	.12
K	.010	.020	.026	.051
L		.045		.115

PV148

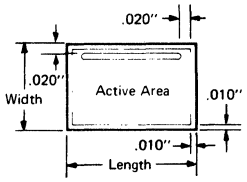

	Nominal Overall Dimensions	
	Thickness .064 centimeters	Thickness .025 inches
	centimeters	inches
PV148	.5 x .224	.197 x .088
PV148a	.5 x .478	.197 x .188
PV148b	.5 x .986	.197 x .388
PV148c	.5 x 2.0	.197 x .788
PV148d	1.0 x 1.0	.394 x .394

PV149

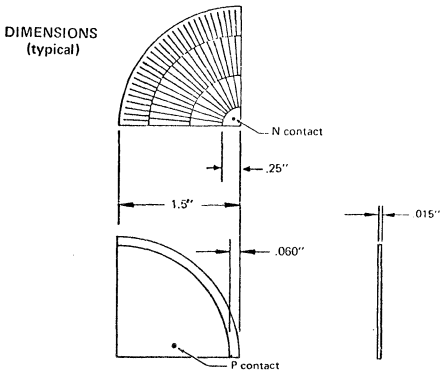

PV150

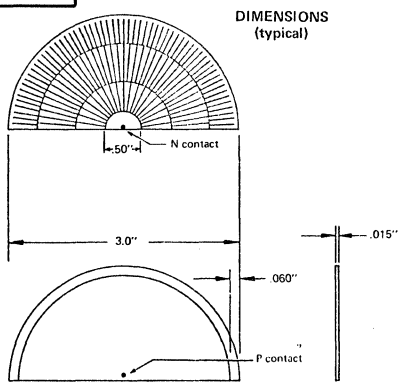

PV152

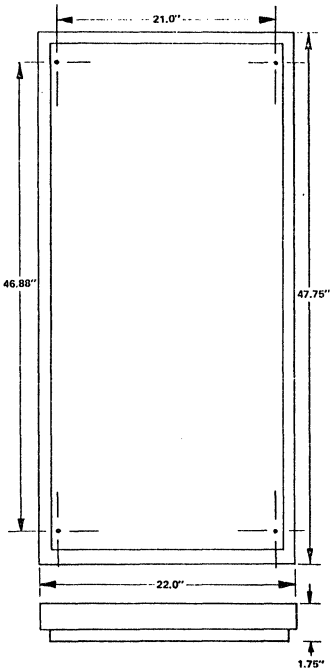

PV151

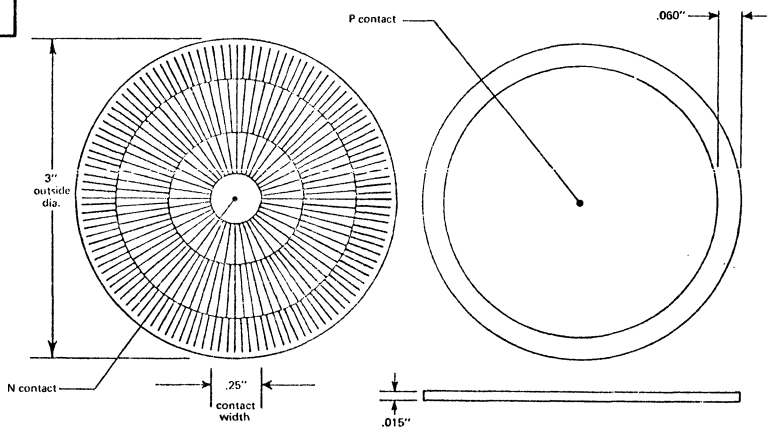

PV153

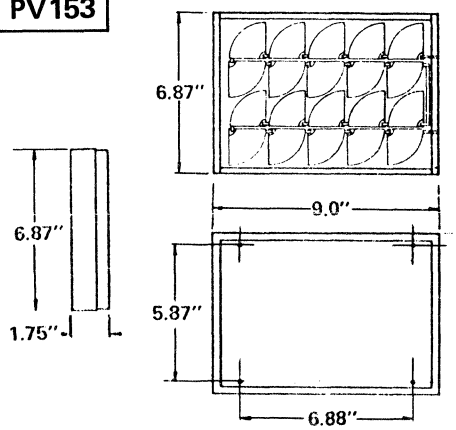

PV154

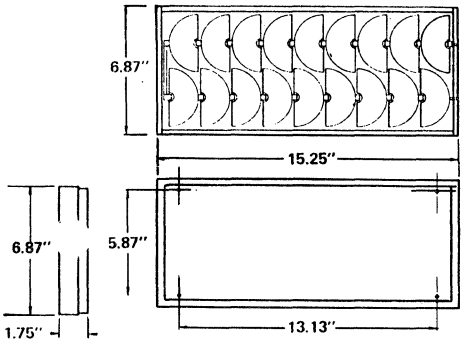

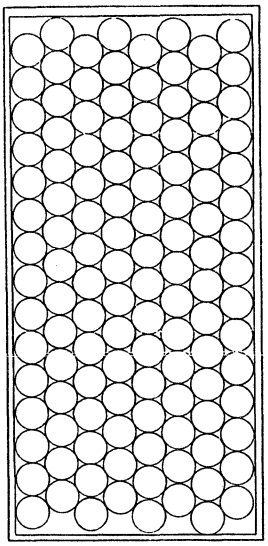

49. OUTLINE DRAWINGS

PV155

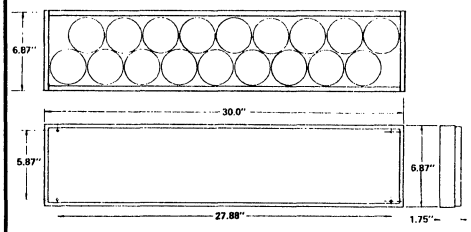

PV156

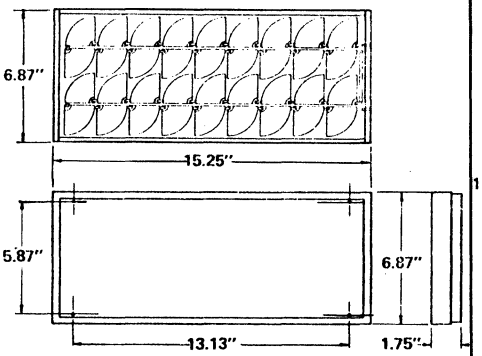

PV157

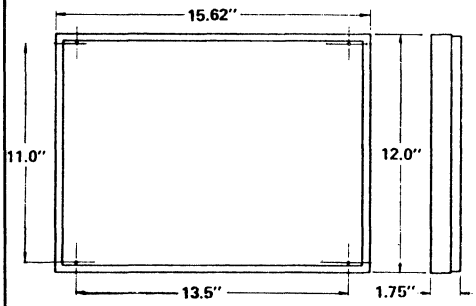

PV158

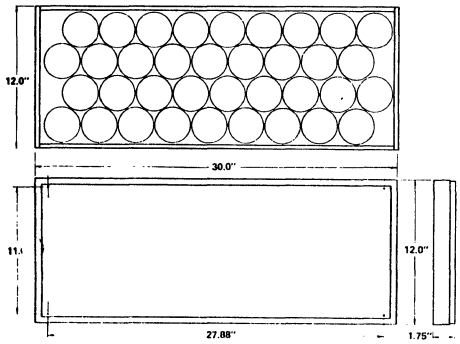

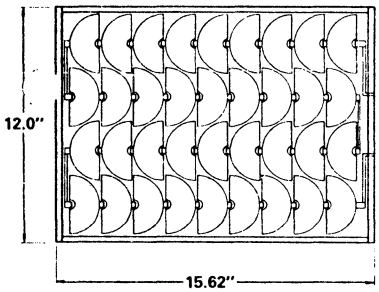

PV160

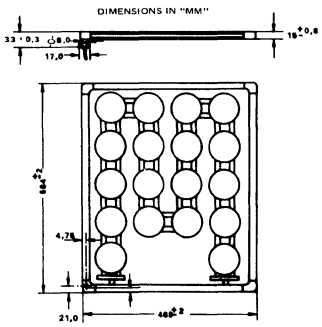

PV161

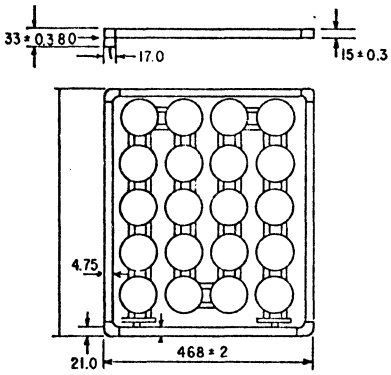

PV162

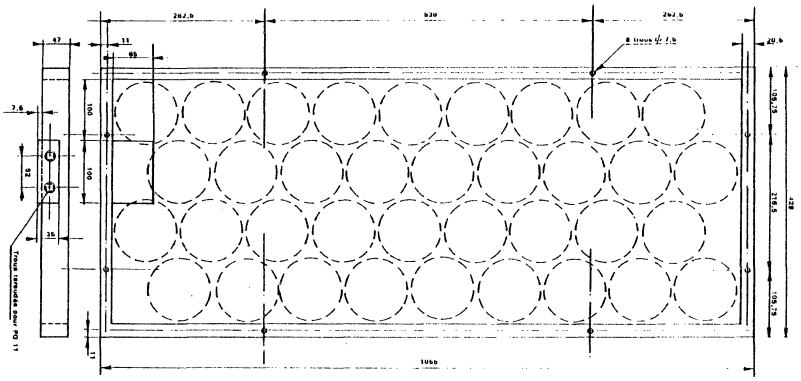

DIMENSIONS IN MILLIMETERS

49. OUTLINE DRAWINGS

PV164

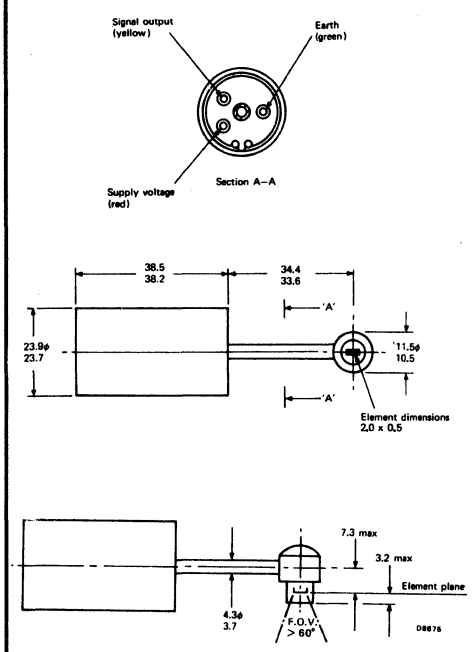

PV165

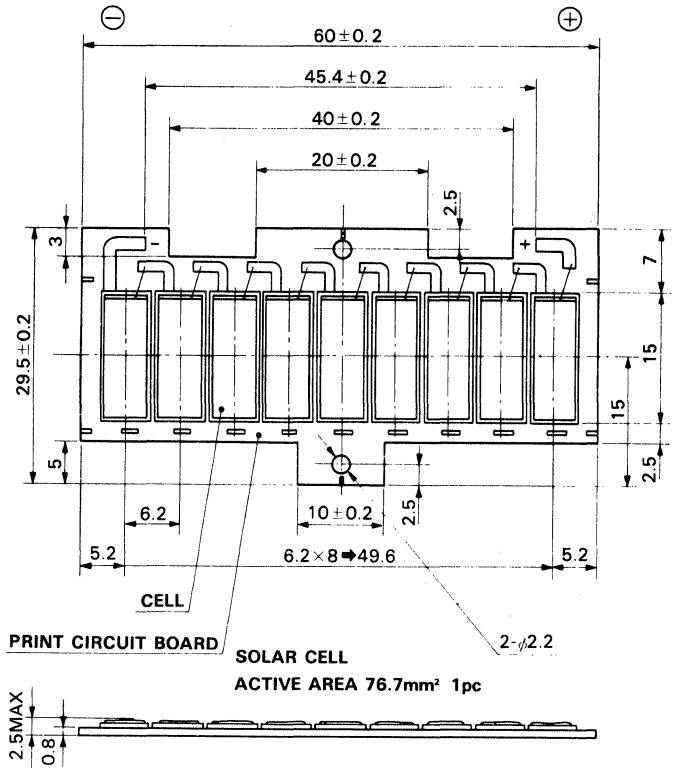

PV166

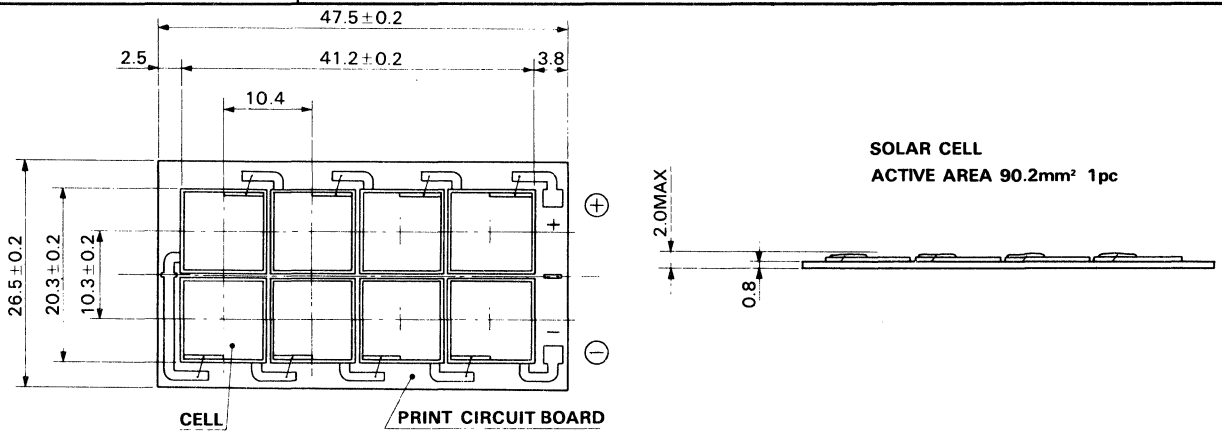

PV167

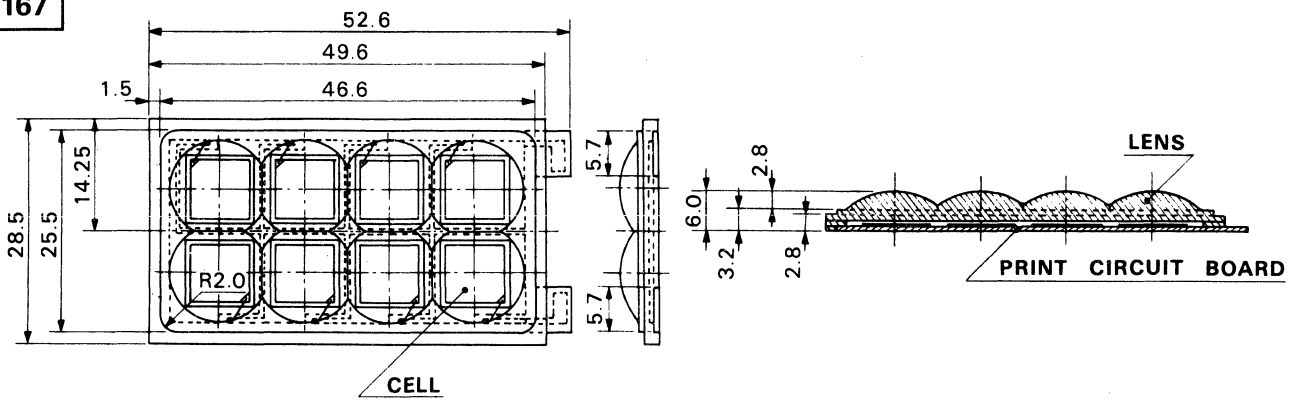

49. OUTLINE DRAWINGS

PV169

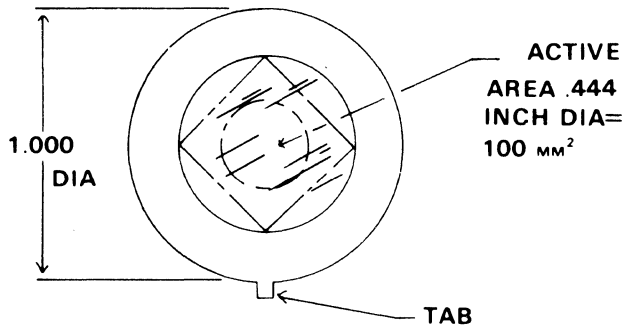

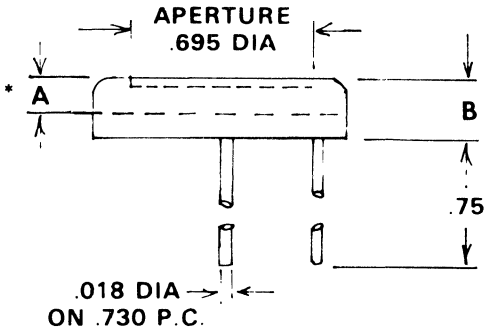

	A	B
PV169	.060	.190
PV169a	.380	.475

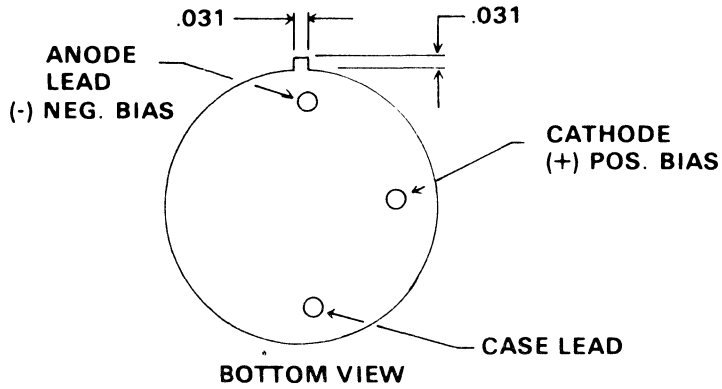

PV170

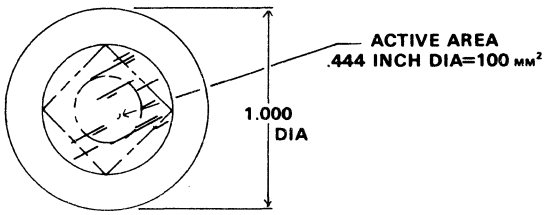

	A	B
PV170	.085	.190
PV170a	.400	.475

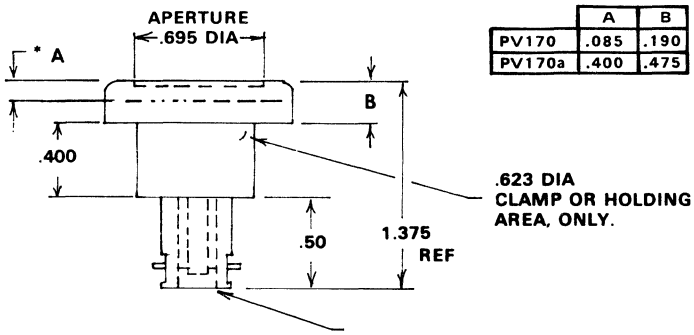

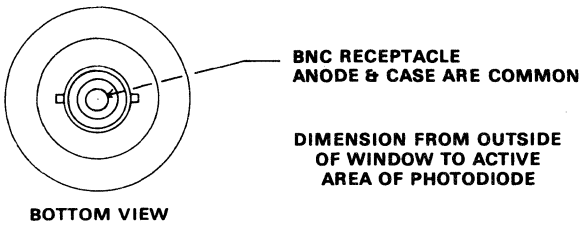

49. OUTLINE DRAWINGS

PV172

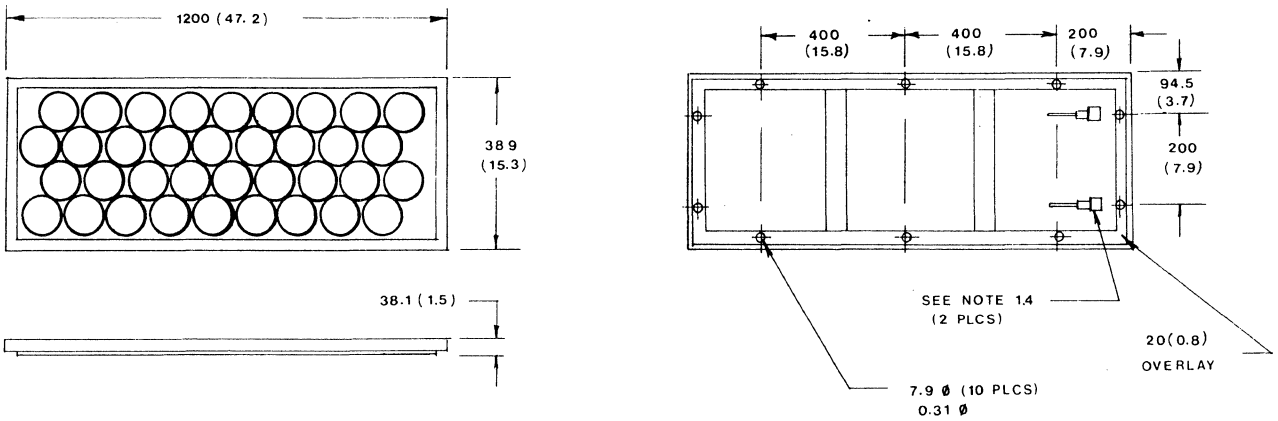

PV173

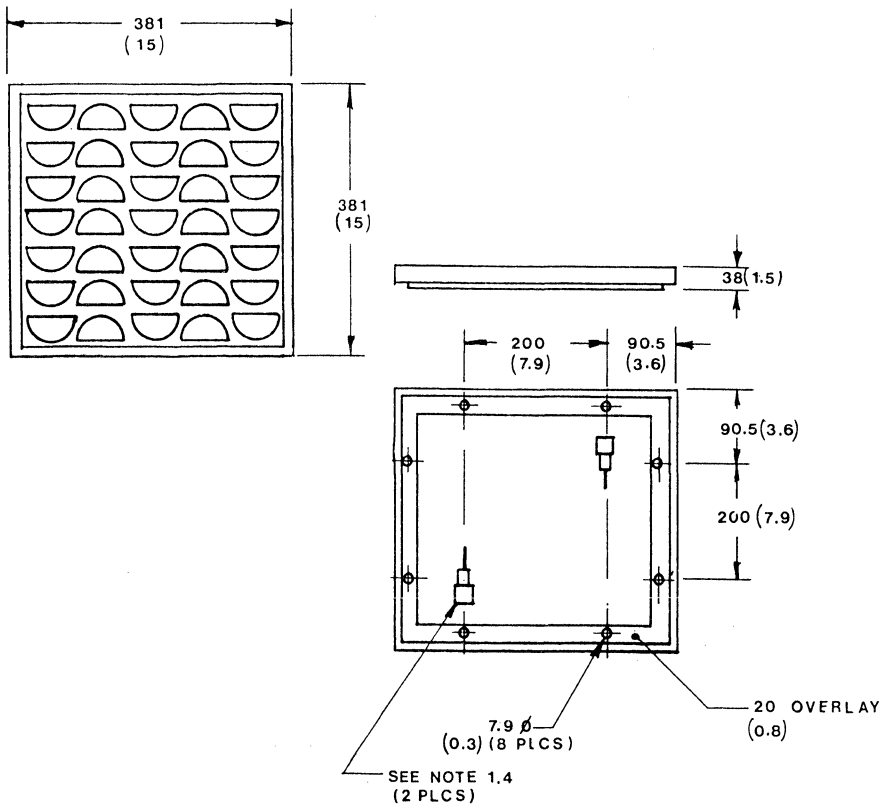

PV174

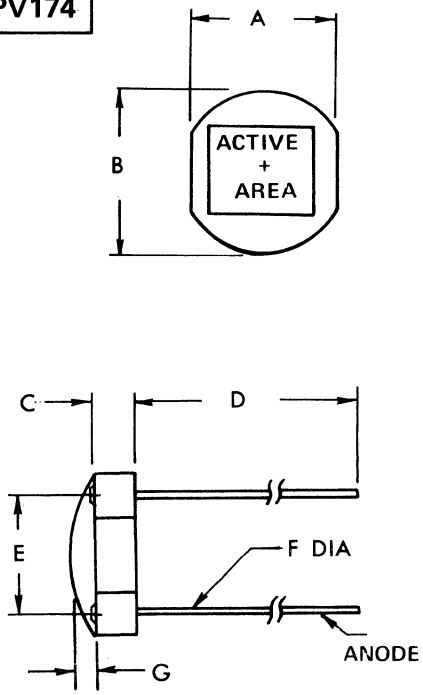

	A	B	C	D	E	F	G
PV174	.248	.283	.075	1.00 MIN	.200	.020	.065 MAX
PV174a	.353 .373	.300 .320	.070	.750 MIN	.255 .275	.020	
PV174b	.180	.156	.070	1.50	.095 .105	.020	.030 MAX
PV174c	.262 .268	.221 .227	.067 .073	1.50	.197 .203	.020	.070
PV174d	.359 .365	.305 .311	.067 .073	1.50	.262 .268	.020	.070

49. OUTLINE DRAWINGS

PV175

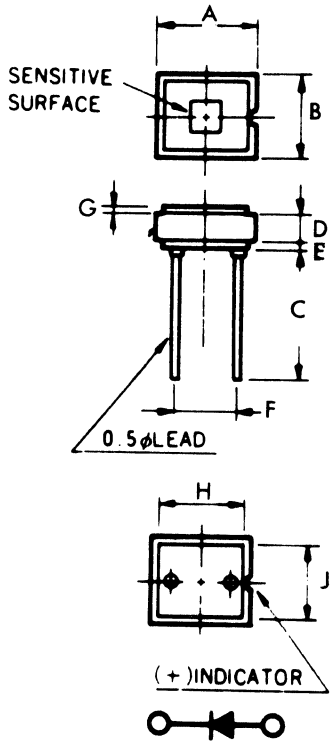

	A	B	C	D	E	F	G	H	Remarks
PV175	.578 .602	.519 .543	.480 TYP	.094 .118	.196 MIN	.047 .070	.019 TYP	.322 .346	
PV175a	.578 .602	.519 .543	.000	.094 .118	.196 MIN	.047 .070	.000	.322 .346	No Cover

PV176

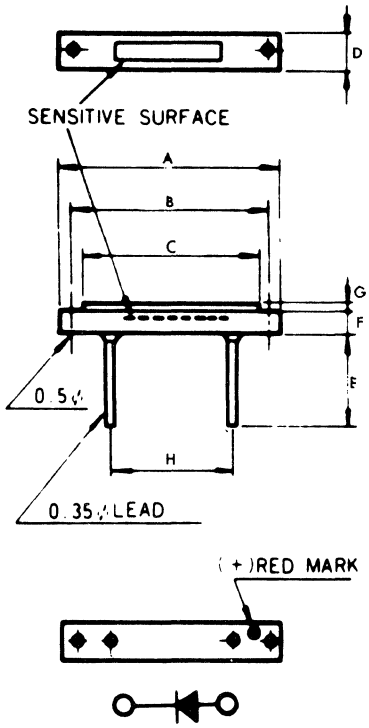

	A	B	C	D	E	F	G	H	J	Remarks
PV176	.283 .307	.224 .248	.314 MIN	.066 .090	.019 TYP	.165 .188	.011 TYP	.240 .263	.177 .200	
PV176a	.283 .307	.224 .248	.314 MIN	.066 .090	.019 TYP	.165 .188	.000	.240 .263	.177 .200	
PV176b	.381 .405	.334 .358	.314 MIN	.066 .090	.019 TYP	.263 .287	.011 TYP	.354 .377	.307 .330	
PV176c	.381 .405	.334 .358	.314 MIN	.066 .090	.019 TYP	.263 .287	.000	.354 .377	.307 .330	
PV176d	.637 .661	.578 .602	.314 MIN	.066 .090	.003 TYP	.480 .503	.011 TYP	.578 .602	.519 .543	
PV176e	.637 .661	.578 .602	.314 MIN	.066 .090	.003 TYP	.480 .503	.000	.578 .602	.519 .543	

PV177

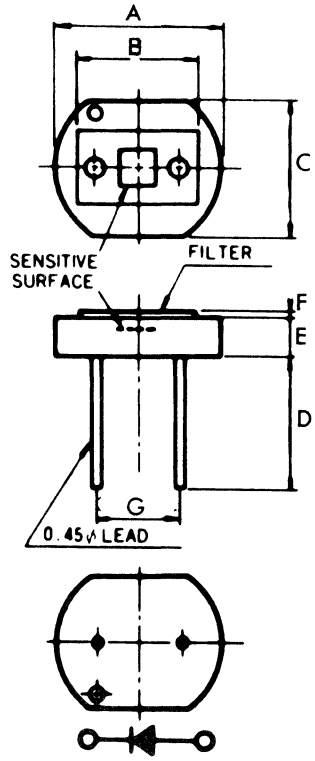

	A	B	C	D	E	F	G	Remarks
PV177	.226 .236	.173 TYP	.188 .204	.433 TYP	.051 .066	.003 TYP	.110 .125	
PV177a	.226 .236	.173 TYP	.188 .204	.433 TYP	.051 .066	.000	.110 .125	No Filter
PV177b	.305 .314	.196 TYP	.224 .240	.314 MIN	.051 .066	.011 TYP	.188 .204	
PV177c	.305 .314	.196 TYP	.224 .240	.354 MIN	.051 .066	.000	.188 .204	No Filter
PV177d	.226 .236		.224 .240	.433 MIN	.051 .066	.000	.114 .122	No Filter

PV178

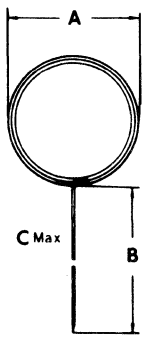

	A	B	C	D
PV178	.315	2.165 MAX	.039 MAX	.118 MAX
PV178a	1.181	1.77 MIN	.047 MAX	.118 MAX
PV178b	1.77	1.77 MIN	.047 MAX	.118 MAX

Over lead wire t = D

PV179

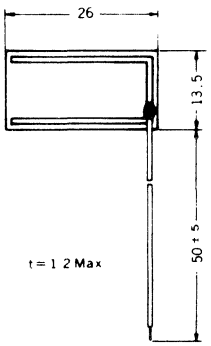

49. OUTLINE DRAWINGS

PV180

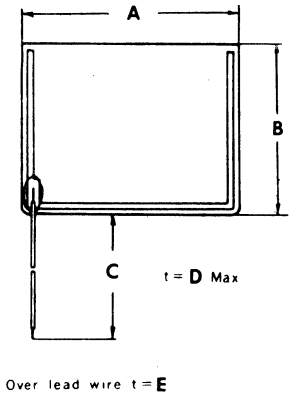

	A	B	C	D	E
PV180	1.496	.708	1.77 MIN	.047 MAX	.118 MAX
PV180a	1.488	1.142	1.77 MIN	.047 MAX	.118 MAX

PV182

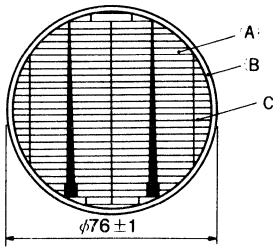

A Active Area
B Inactive Area
C Electrode

PV183

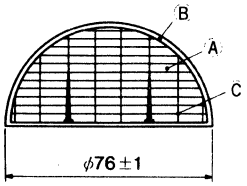

A Active Area
B Inactive Area
C Electrode

PV184

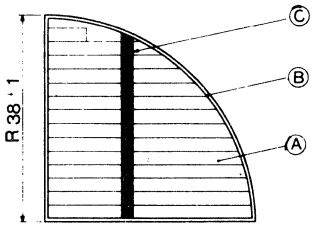

A Active Area
B Inactive Area
C Electrode

PV185

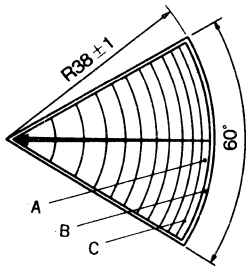

A Active Area
B Inactive Area
C Electrode

PV186

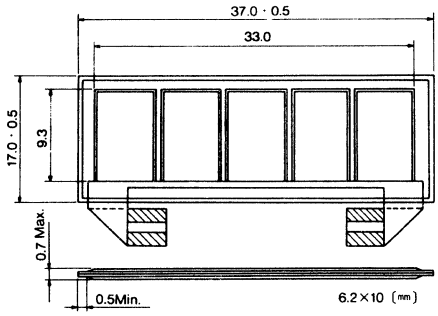

PV187

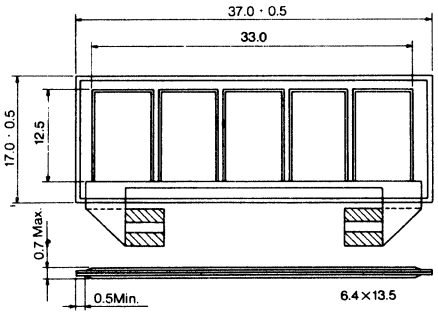

PV188

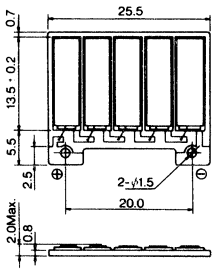

PV189

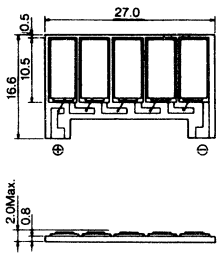

PV190

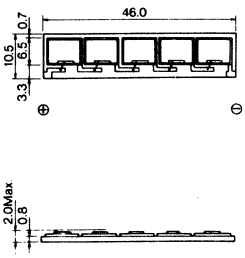

49. OUTLINE DRAWINGS

PV191

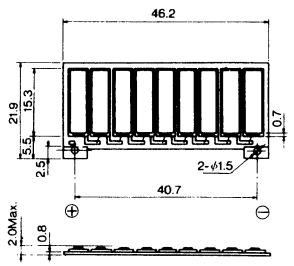

PV192

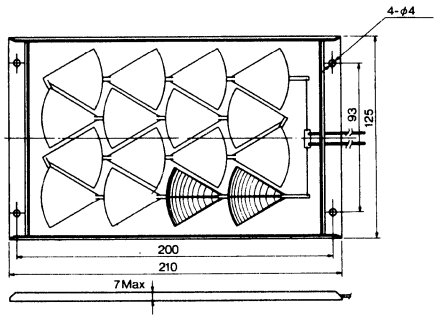

PV193

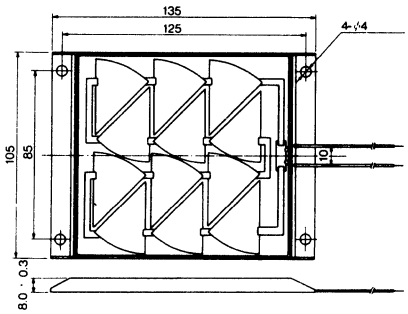

PV194

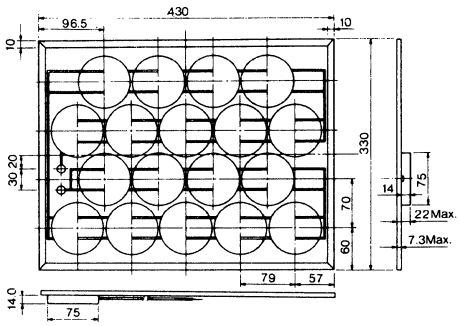

PV195

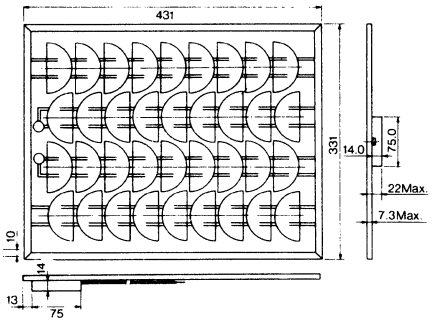

PV196

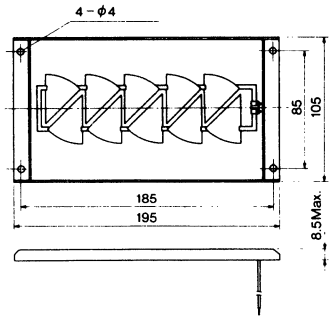

PV197

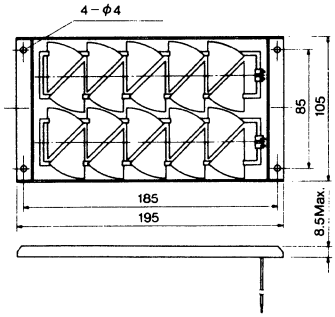

PV198

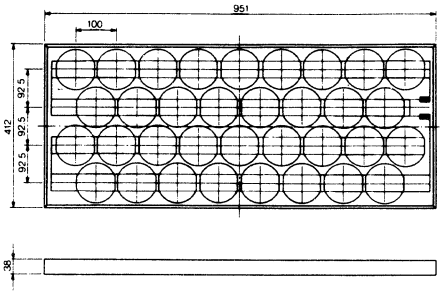

PV199

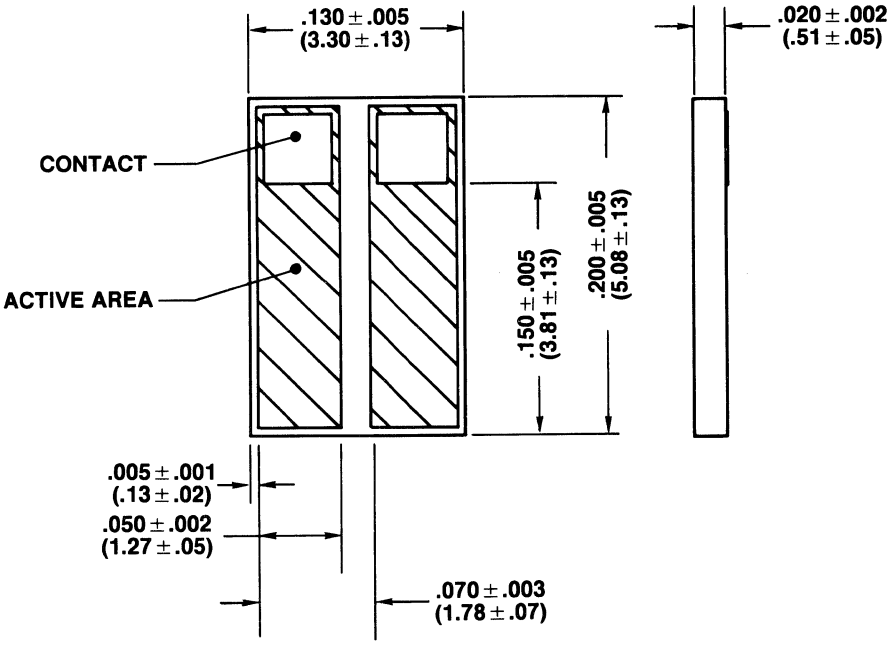

49. OUTLINE DRAWINGS

PV200

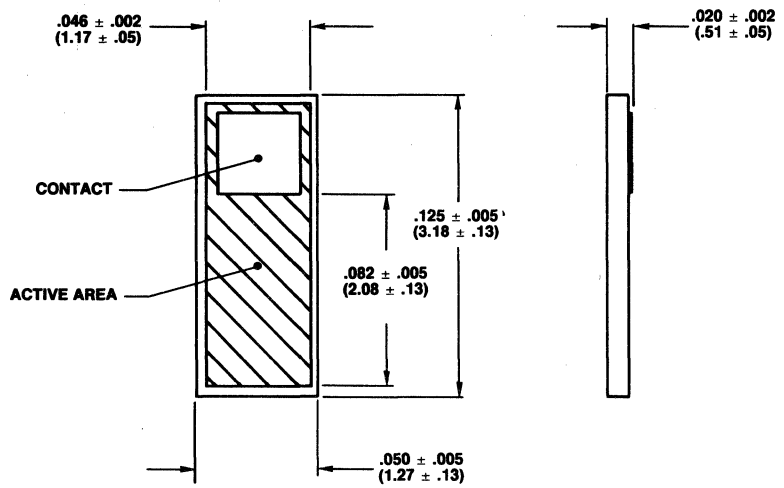

PV201

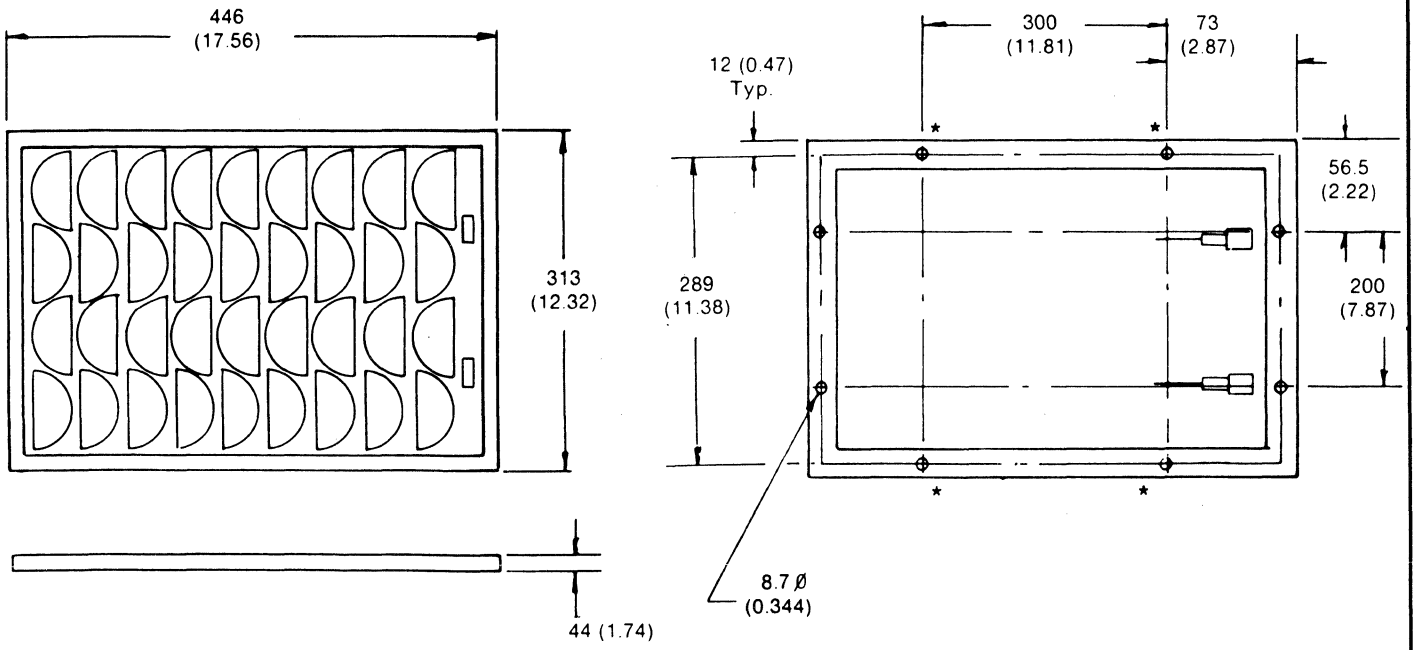

Units in millimeters (inches)
Tolerance: ± 1.0 (0.04)

49. OUTLINE DRAWINGS

PV202

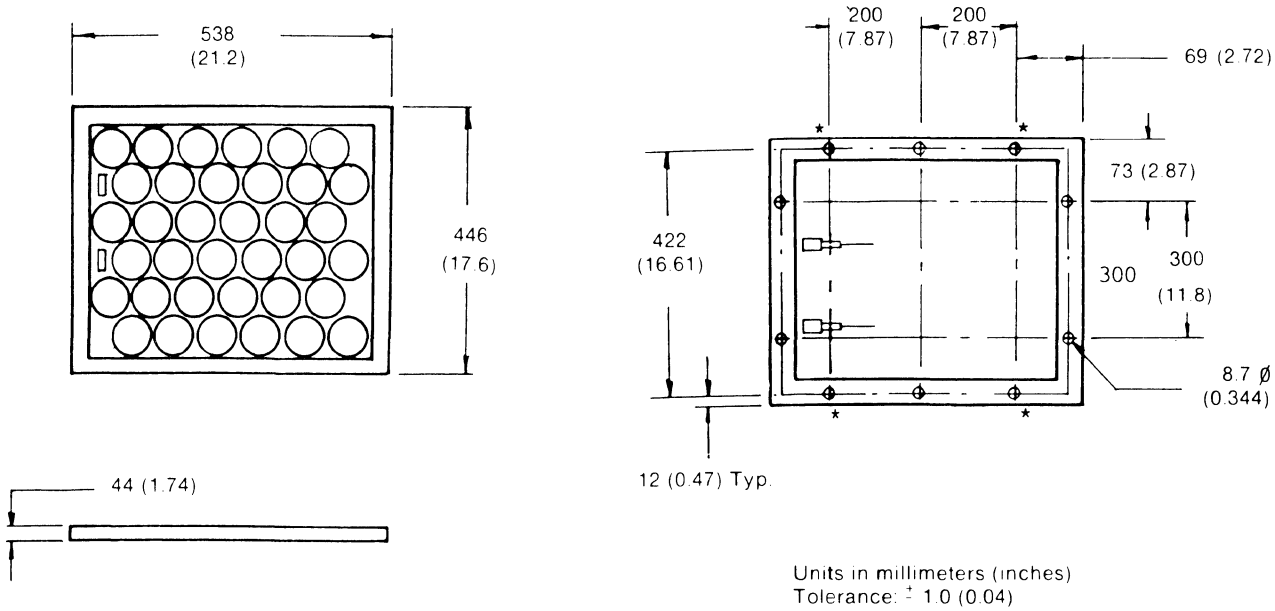

Units in millimeters (inches)
Tolerance: ± 1.0 (0.04)

PV203

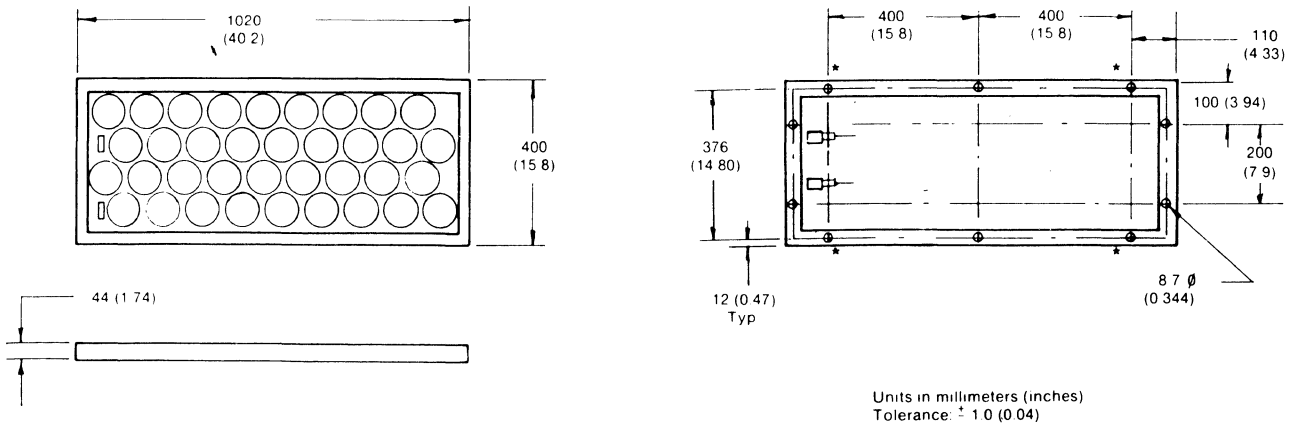

Units in millimeters (inches)
Tolerance: ± 1.0 (0.04)

PV204 Dimensions in mm

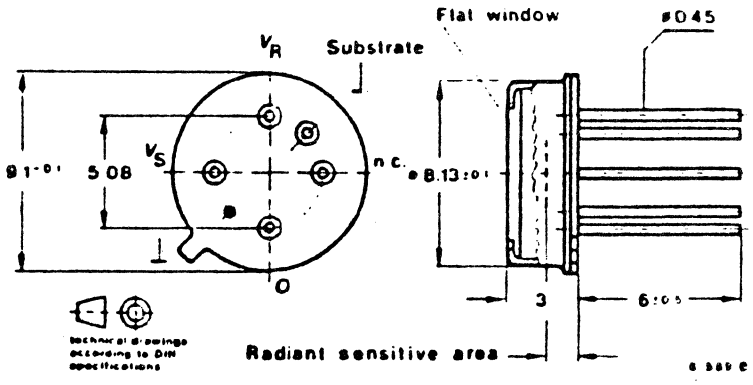

49. OUTLINE DRAWINGS

PY9

DWG. NO.	Description	
	Digit Pos.	Digits
PY9	2	1½
PY9a	2	2
PY9b	3	3
PY9c	3	2½
PY9	2	1½
PY9a	2	2
PY9b	3	3
PY9c	3	2½

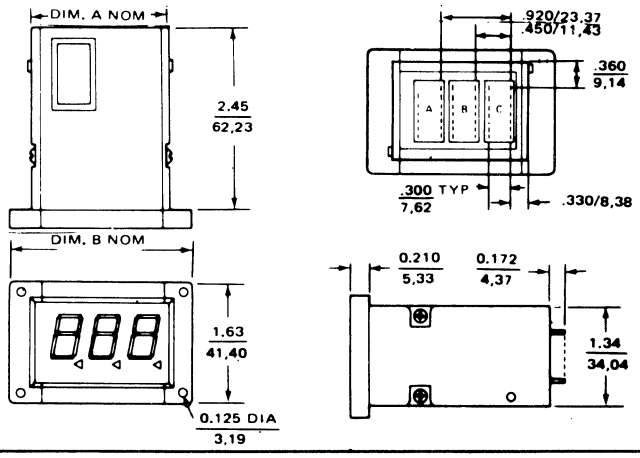

PY10

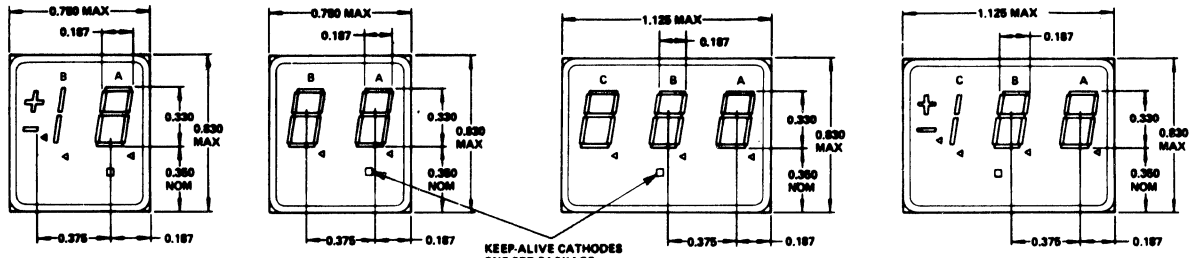

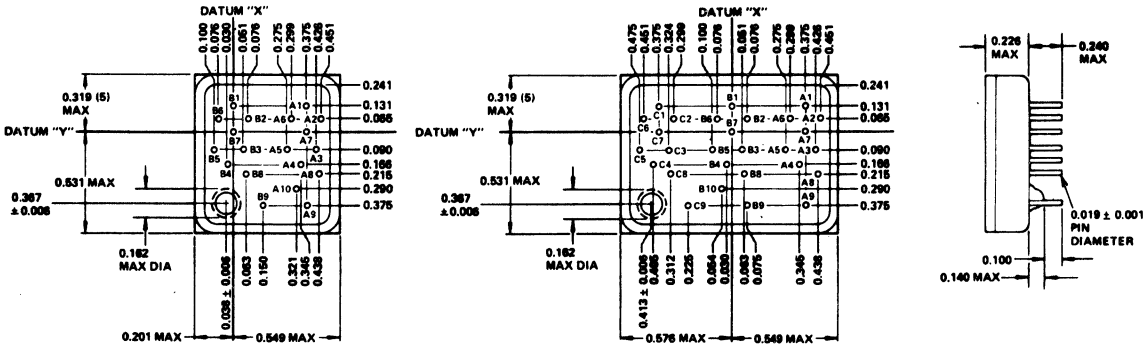

PY11

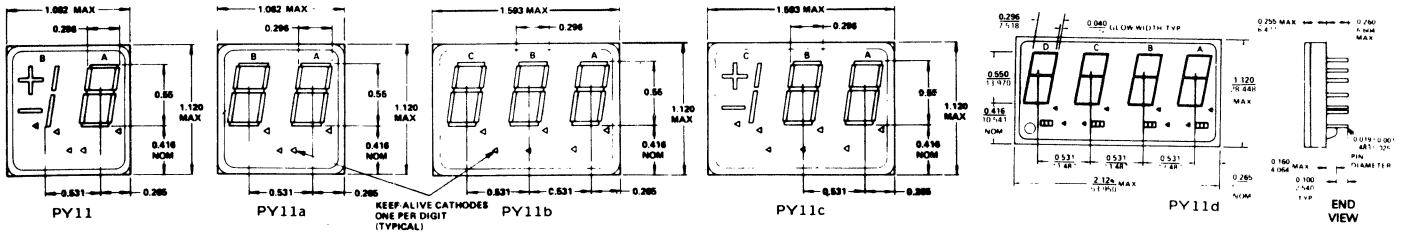

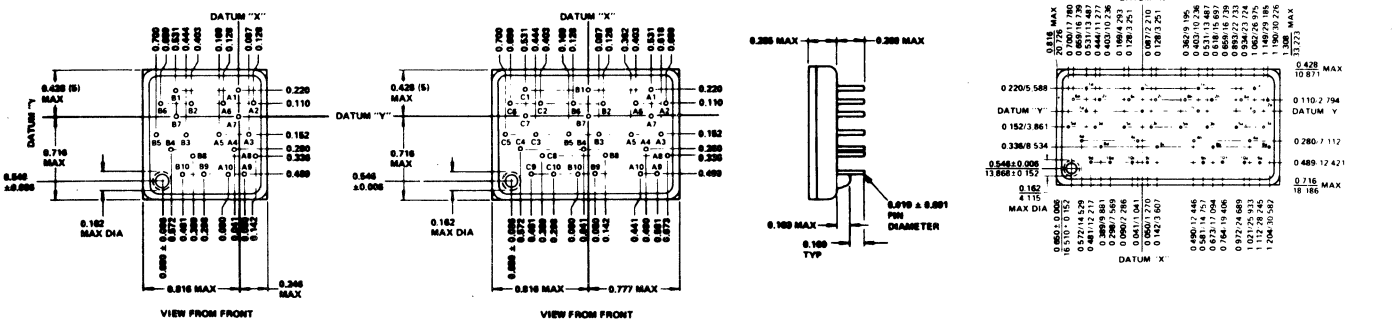

49. OUTLINE DRAWINGS

PY15

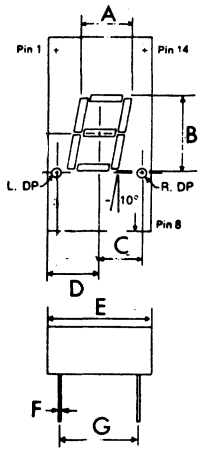

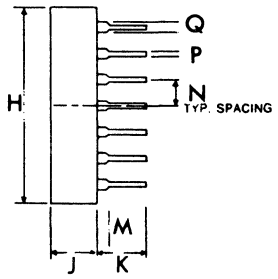

	A	B	C	D	E	F	G	H	J	K	M	N	P	Q
PY15	.200	.305	.165	.200	.400	.010	.300	.750	.180	.185	.045	.100	.020	.040
PY15a	.275	.430	.205	.250	.500 MAX	.010	.300	.750	.250	.160 MIN	.060	.100	.020	.040

PY19

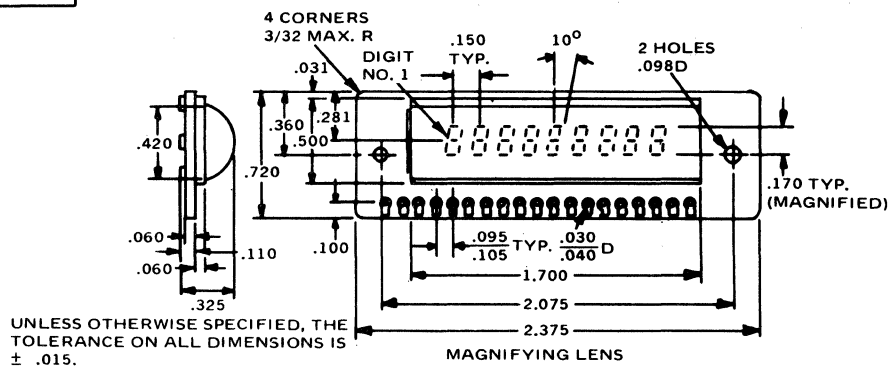

UNLESS OTHERWISE SPECIFIED, THE TOLERANCE ON ALL DIMENSIONS IS ± .015.

PY25

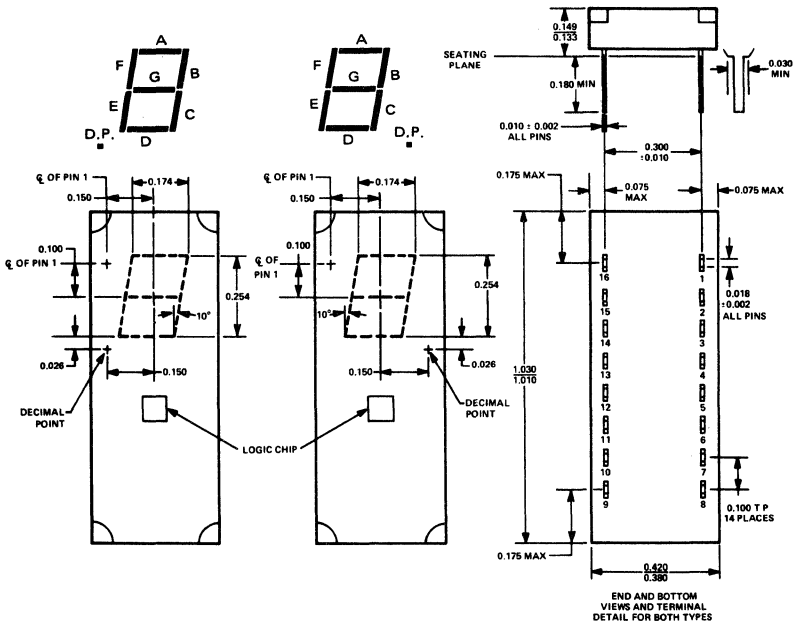

NOTES: A. The true-position pin spacing is 0.100 between centerlines. Each pin centerline is located within 0.010 of its true longitudinal position relative to pins 1 and 16.

B. Centerlines of character segments and decimal points are shown as dashed lines. Associated dimensions are nominal.

C. Lead dimensions are not controlled above the seating plane.

49. OUTLINE DRAWINGS

PY28

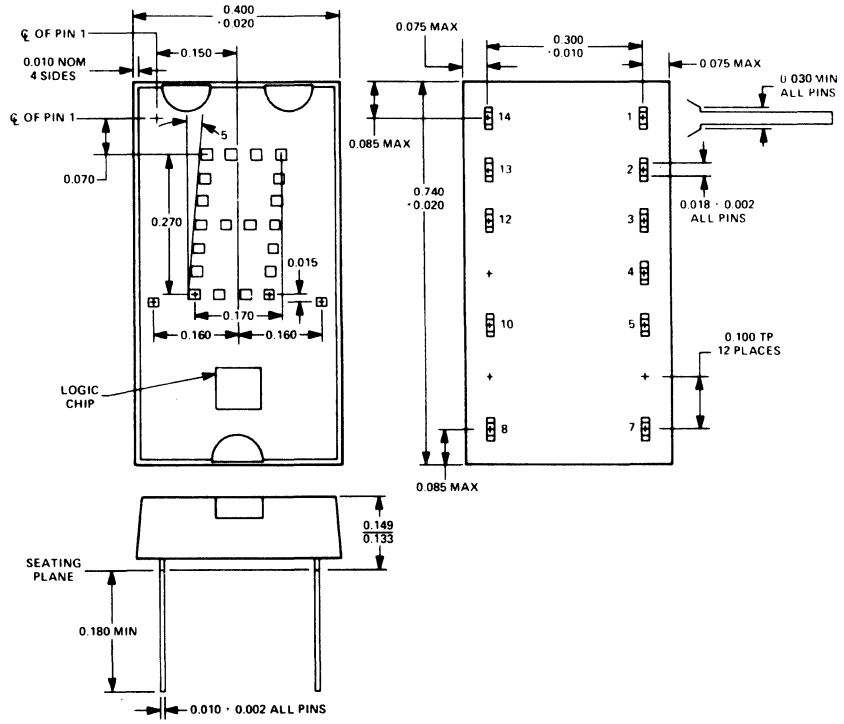

PY29

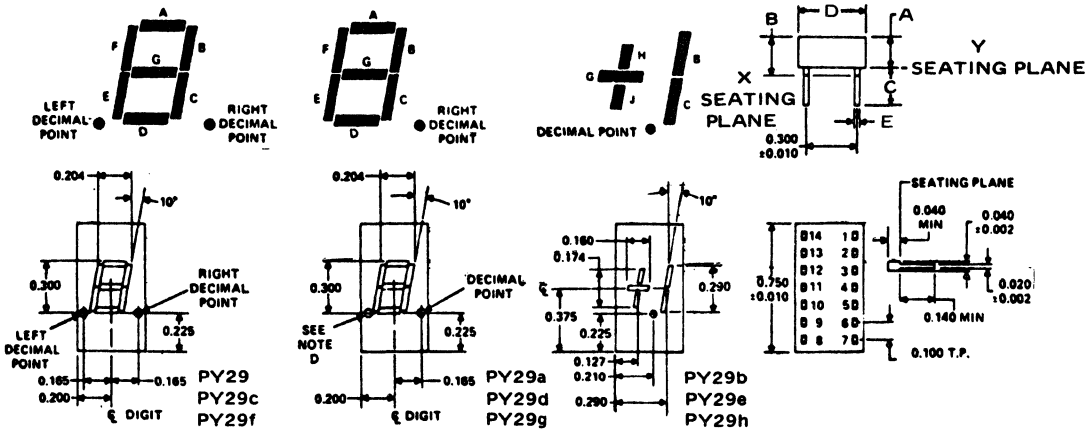

	A	B	C	D	E	SEATING PLANE
PY29	.100	.215 .240		.390 .410	.008 .012	X
PY29a	.100	.215 .240		.390 .410	.008 .012	X
PY29b	.100	.215 .240		.390 .410	.008 .012	X
PY29c	.215 .240		.140 MIN	.390 .410	.008 .012	Y
PY29d	.215 .240		.140 MIN	.390 .410	.008 .012	Y
PY29e	.215 .240		.140 MIN	.390 .410	.008 .012	Y
PY29f	.215 .245		.140 MIN	.400 .420	.018 .022	Y
PY29g	.215 .245		.140 MIN	.400 .420	.018 .022	Y
PY29h	.215 .245		.140 MIN	.400 .420	.018 .022	Y
PY29J	.175 .185	.215 .240		.400 .420	.008 .012	

49. OUTLINE DRAWINGS

PY38

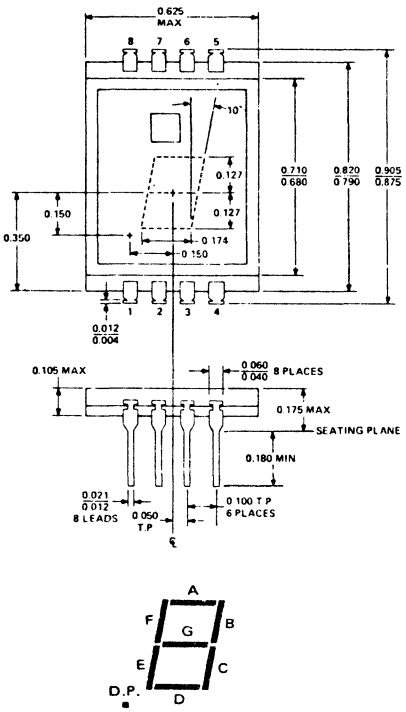

PY39

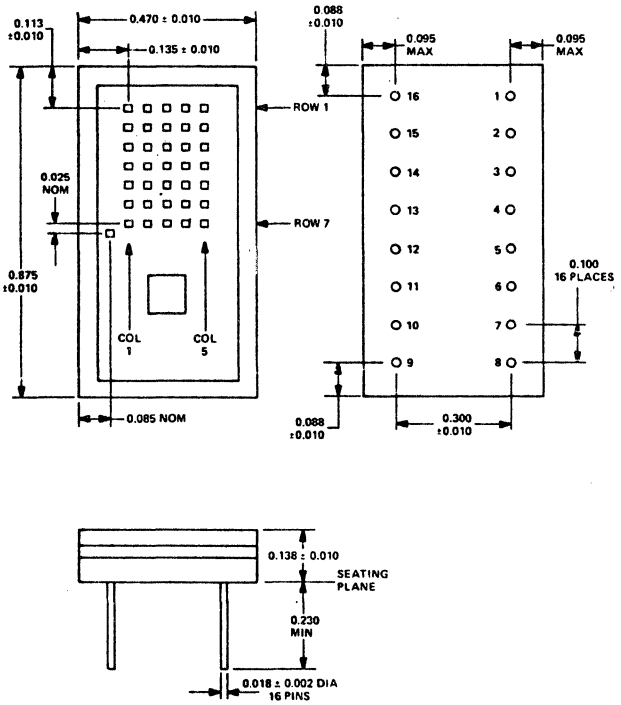

PY41

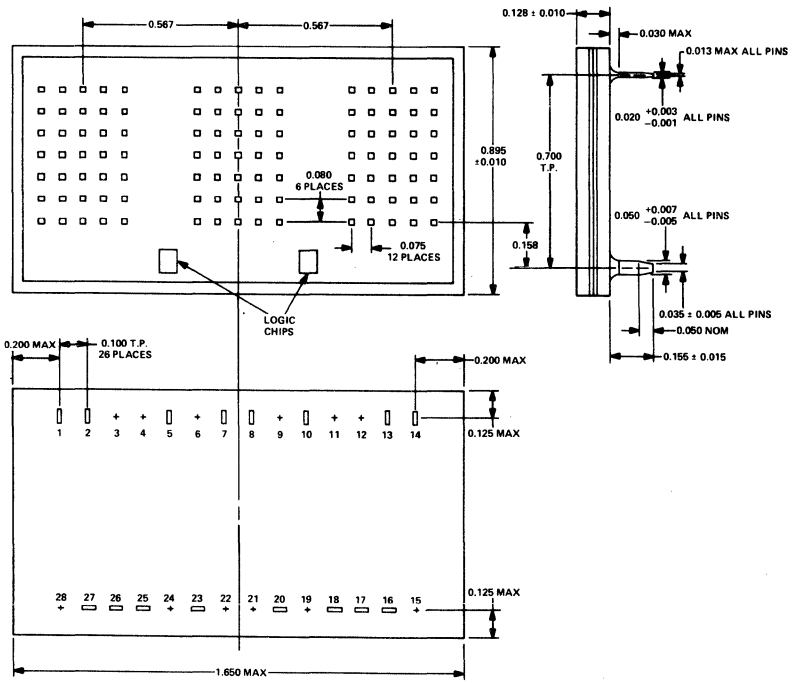

49. OUTLINE DRAWINGS

PY43

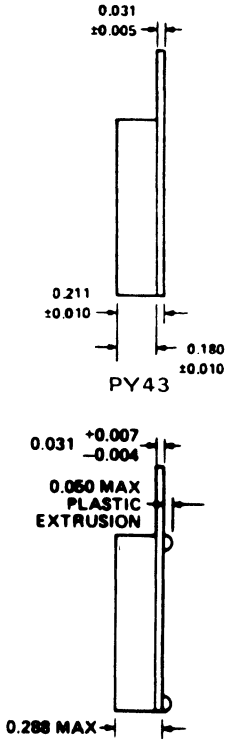

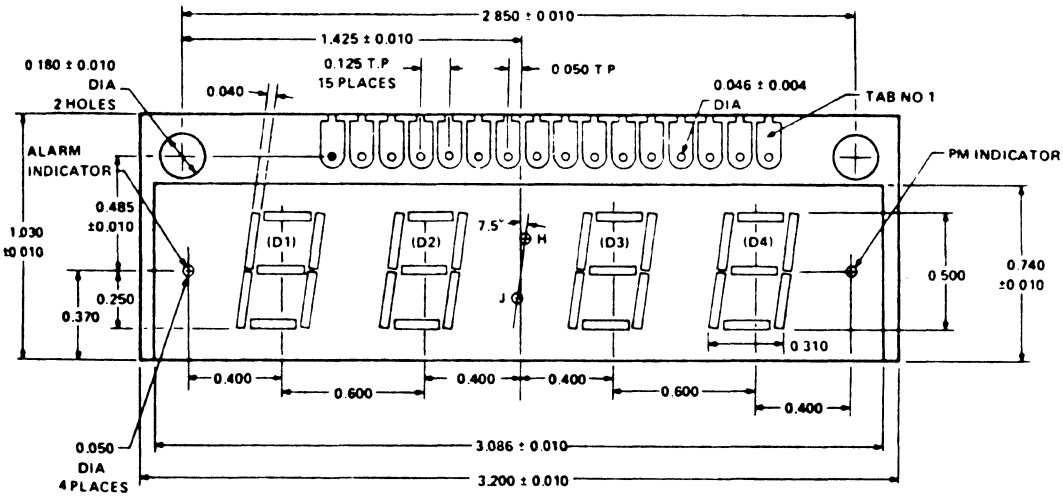

PY50

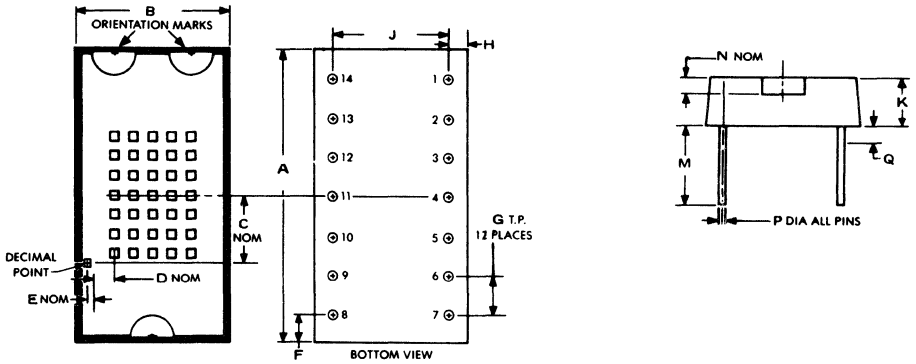

	A	B	C	D	E	F	G	H	J	K	M	N	P	Q
PY50	.720 .760	.380 .420	.170	.050	.020	.055 .085	.100	.035 .065	.296 .304	.110 .130	.145 MIN	.040	.018 .021	.040
PY50a	.740	.400	.170				.100		.300	.120	.300		.020	
PY50b	.720 .760	.380 .420	.170 NOM	.050 NOM	.020 NOM	.085 MAX	.100	.075 MAX	.290 .310	.133 .149	.180 MIN		.016 .020	
PY50c	.720 .760	.460 .490	.175 NOM	.050 NOM		.085 MAX	.100	.100 MAX	.290 .310	.117 .147	.233 MIN		.017 .021	.063 .075

49. OUTLINE DRAWINGS

PY56

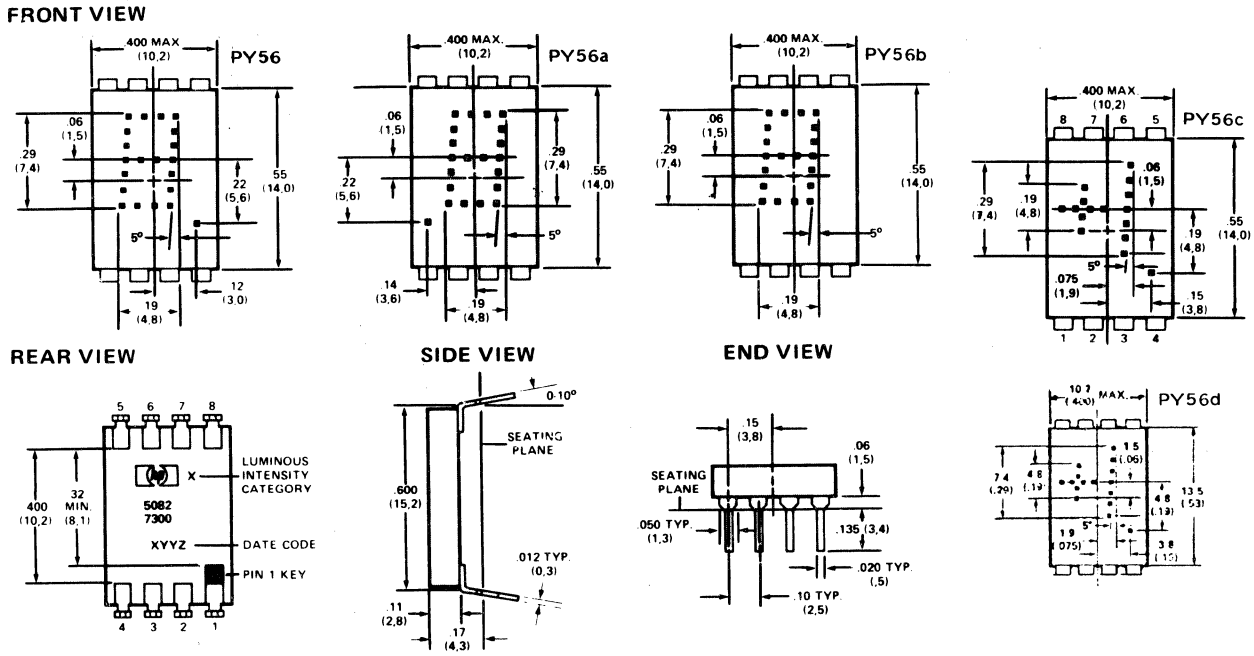

PY57

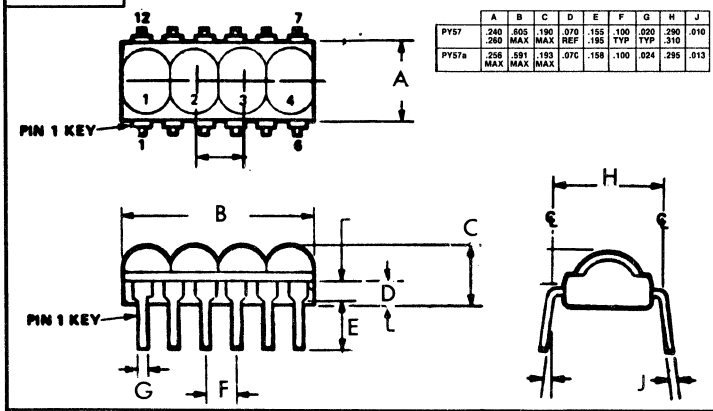

	A	B	C	D	E	F	G	H	J
PY57	.240 .260	.605 MAX	.190 MAX	.070 REF	.155 .195	.100 TYP	.020 TYP	.290 .310	.010
PY57a	.256 MAX	.591 MAX	.193 MAX	.07C	.158	.100	.024	.295	.013

PY58

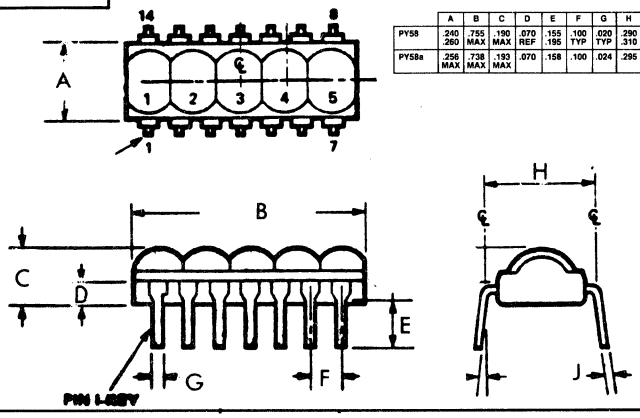

	A	B	C	D	E	F	G	H	J
PY58	.240 .260	.755 MAX	.190 MAX	.070 REF	.155 .195	.100 TYP	.020 TYP	.290 .310	.010
PY58a	.256 MAX	.738 MAX	.193 MAX	.070	.158	.100	.024	.295	.015

PY60

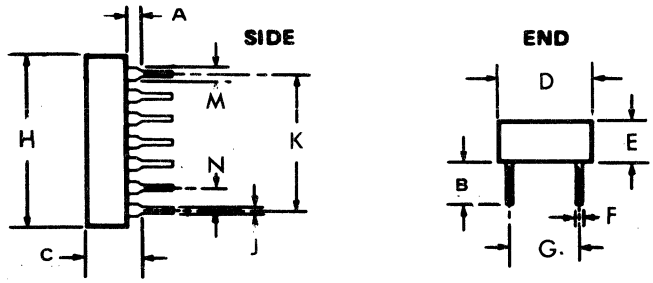

	A	B	C	D	E	F	G	H	J	K	M	N
PY60	.045	.185	.225	.400	.180	.010	.300	.750	.020	.600	.040	.100
PY60b	.060	.160	.240	.400	.180	.010	.300	.750	.020	.600	.040	.100
PY60e	.040 TYP	.160 MIN	.290	.505 MAX	.250	.010 TYP	.300 TYP	.740 .760	.020	.600 REF	.040 TYP	.100 TYP
PY60f	.060	.160 MIN	.310	.505 MAX	.250	.010	.300	.740 .760	.020	.600	.040	.100
PY60g			.150 MAX	.390 .410		.020	.250 MIN	.740 .760	.020		.045 MIN	.100 TYP
PY60h		.180 MIN	.133 .149	.380 .420		.010	.290 .310	.720 .760	.016 .020	.570	.030 MIN	.100 TYP
PY60i		.200 MIN		.400	.120	.020	.300	.760	.020	.600		.100
PY60k		.140 .150	.275 MAX	.395 .405	.240 .260	.019 .021	.295 .305	.735 .745	.019 .020			.095 .105
PY60m		.276 MIN		.496	.252		.308	.748		.600		.100
PY60n	.010	.210	.310	.830	.300	.010	.600	1.000	.020	.600	.040	.100
PY60p		.156 MAX	.320	.760	.320	.020	.300	.970	.020	.600	.020	.100

49. OUTLINE DRAWINGS

PY63

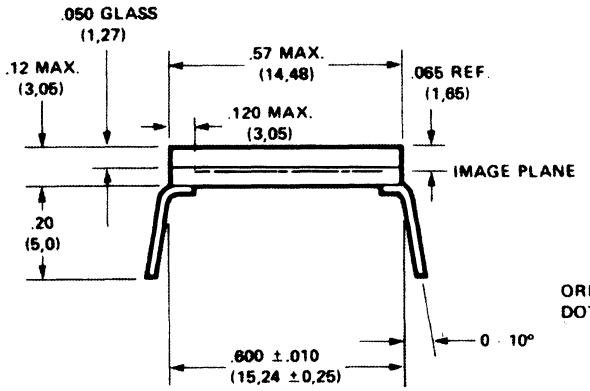

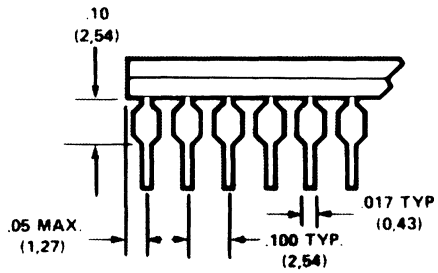

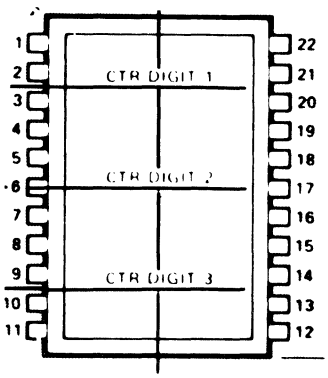

ORIENTATION MARK
DOT ON REAR

PY63a

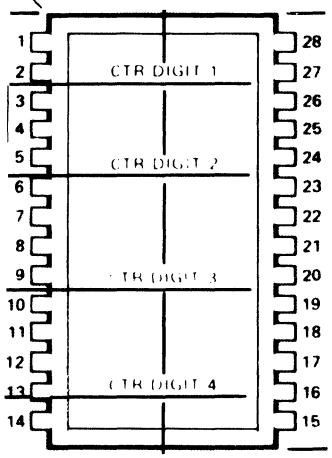

ORIENTATION MARK
DOT ON REAR

PY63b

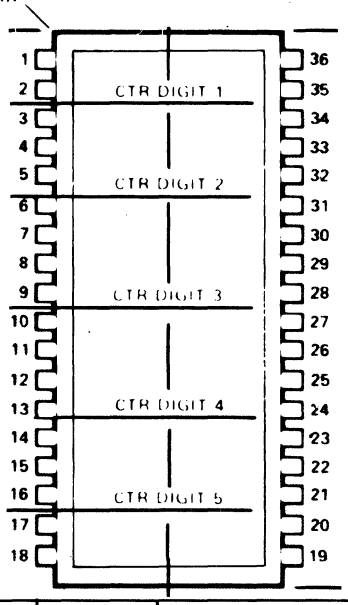

PY64

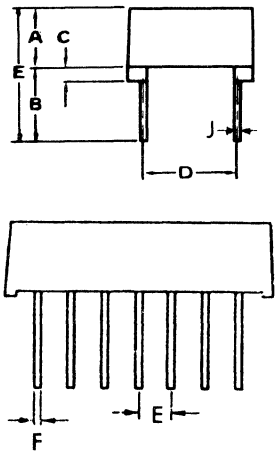

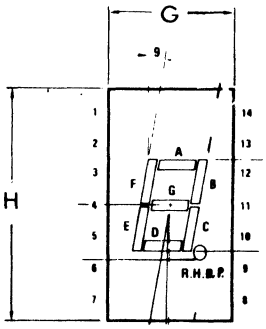

	A	B	C	D	E	F	G	H	J
PY64	.225	.250 .310	.020	.290 .310	.100 TYP	.017 .023	.390 .410	.750	
PY64q	.227	.240	.047	.300	.100 TYP	.017 .023	.390 .410	.750	
PY64h	.200	.280 NOM	.040	.285 .315	.100 TYP		.385 .415	.745 .775	
PY64i	.319 .349	.178	.039	.585 .615	.100 TYP	.018	.886 NOM	1.284 1.314	.018
PY64k	.295	.178	.039	.600	.100	.020	.748 NOM	.969 .999	.010
PY64m	.275	.160	.039	.400	.100	.019	.531	.826	.009
PY64n	.335	.300	.030	.700	.100		.600	.850	
PY64p	.205 .235	.165 .185	.040 NOM	.290 .310	.100 TYP	.015 .025	.390 .415	.740 .765	.008 .012
PY64g	.205	.205 .235		.300	.100 TYP	.016 .020	.388 .396	.750	.010
PY64r	.190 .210	.145 .175	.050	.285 .315	.100 TYP	.020 .024	.376 .396	.728 .748	.010 .017
PY64s	.205	.295	.040	.295	.100	.024	.402	.768	

49. OUTLINE DRAWINGS

PY67

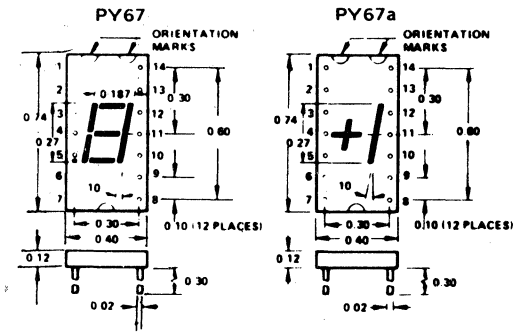

PY79

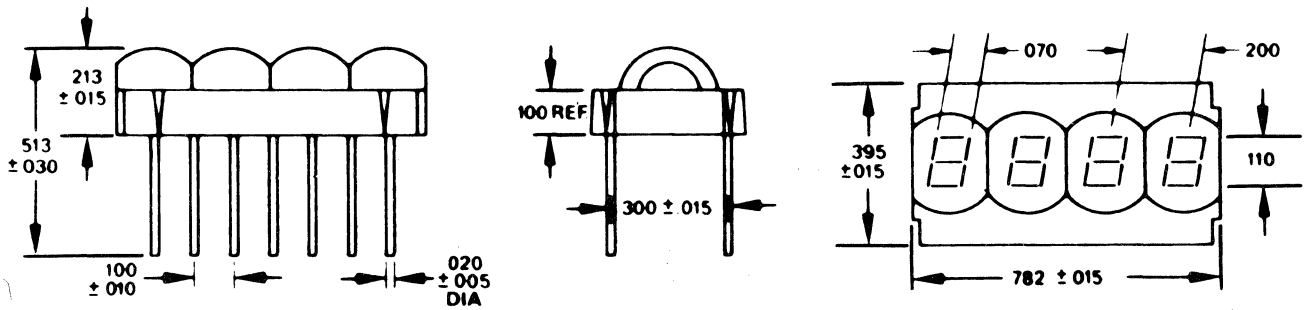

PY104

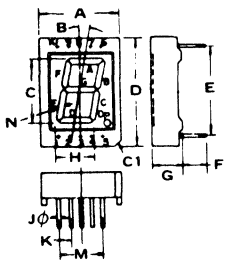

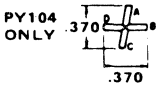

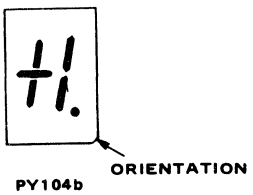

PY120

	A	B	C	D	E	F	G	H	J	K	M	N
PY104	.708	10°	.590	.984	.787	.086 MIN	.322	.354	.017	.099	.399	
PY104a	.721		.600	.996	.787	.142	.331	.354		.100	.400	.047
PY104b	.700 .720		.600	.975 .995	.787	.100	.331 MAX		.020	.100	.400	

PY107

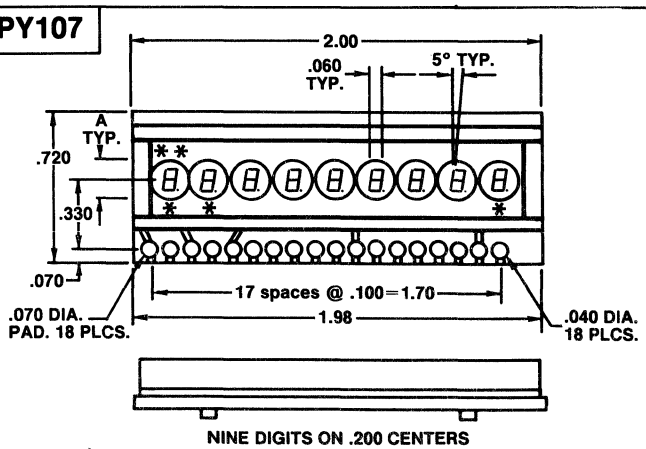

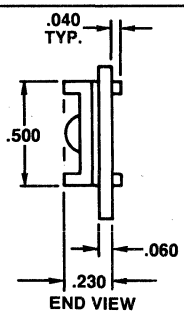

	A	Digits Elim.
PY107	.100	
PY107a	.110	
PY107b	.100	*
PY107c	.100	**

49. OUTLINE DRAWINGS

PY108

PY108a uses 12 center digits

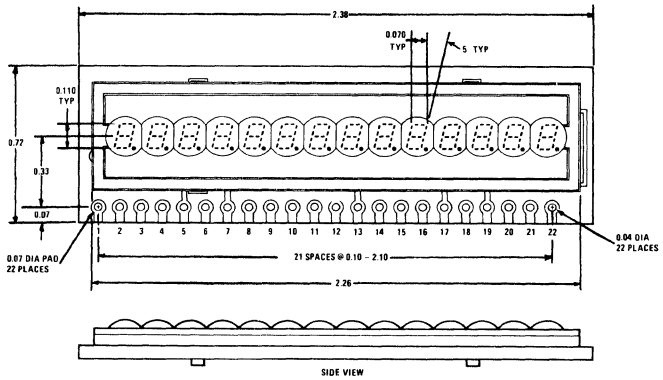

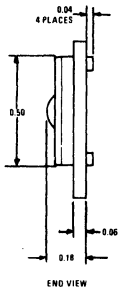

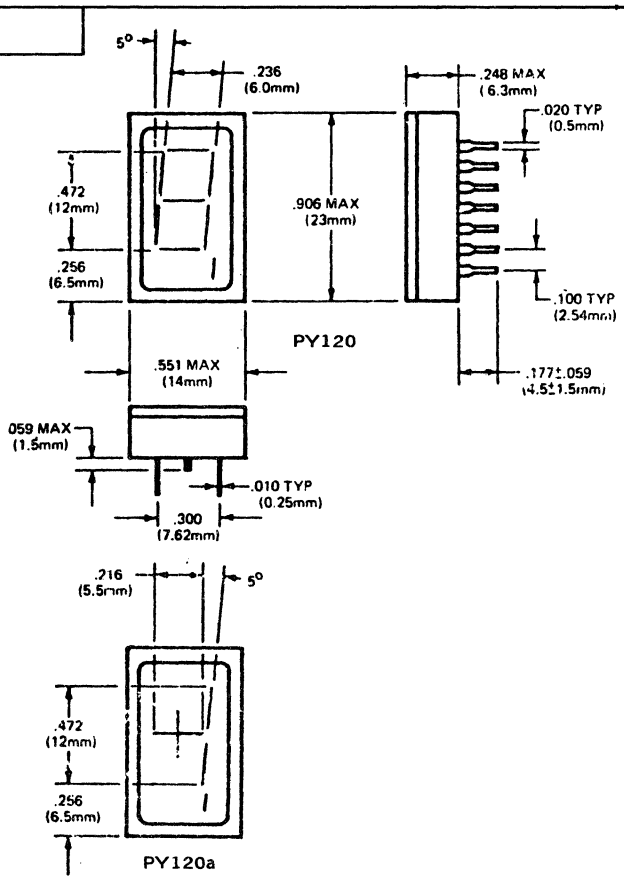

PY121

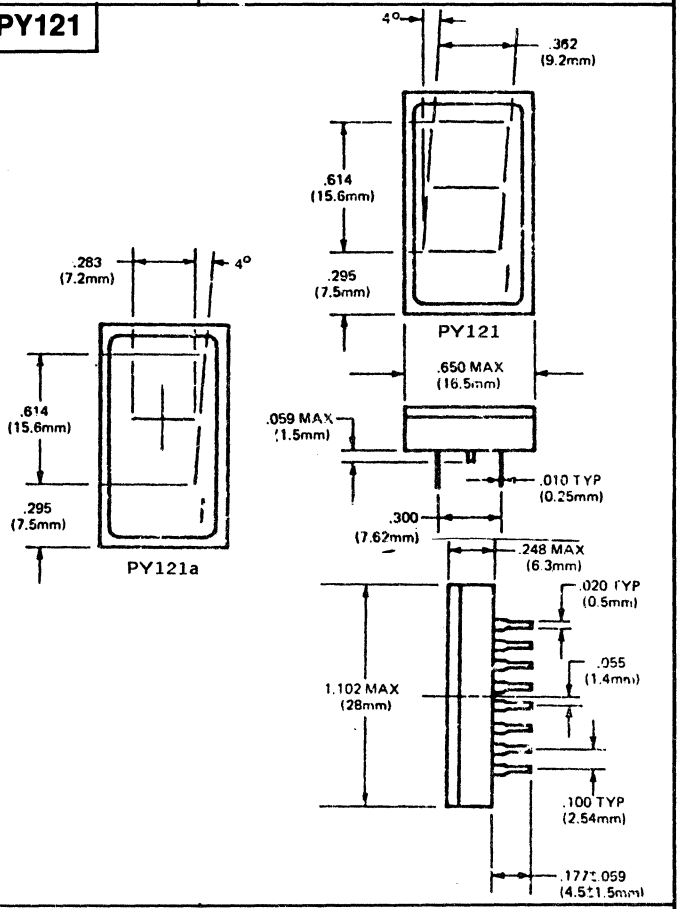

PY125

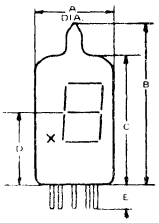

	A	B	C	D	E	F	G
PY125	.512 MAX	1.496 MAX	1.220	.689	.185 MAX		
PY125a	.512 MAX	1.496 MAX	1.220	.689	.217 MAX	.230	.020
PY125b	.779 MAX	1.622 MAX	1.2791	.728	.248	.468	.040
PY125c	.785 MAX	1.625 MAX	1.188 1.312	.700 .730	.250 MAX		
PY125d	.810 MAX	1.625 MAX		.700 .730	.250 MAX	.468	.040
PY125e	.512 MAX	1.450 MAX		.625 .665	.250 MAX	.230	.020
PY125f	.82	2.09		1.02	.25	.468	.040

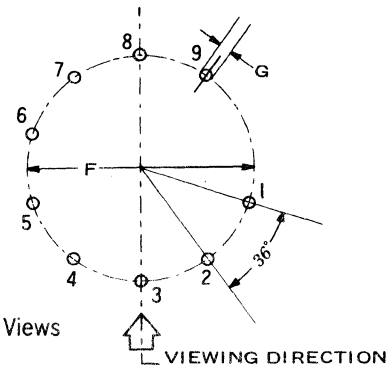

Bottom Views

49. OUTLINE DRAWINGS

PY126

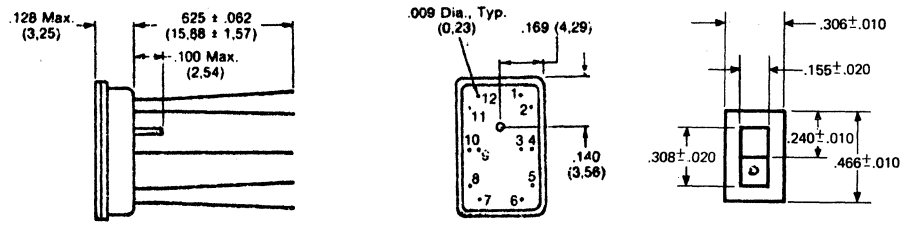

PY127

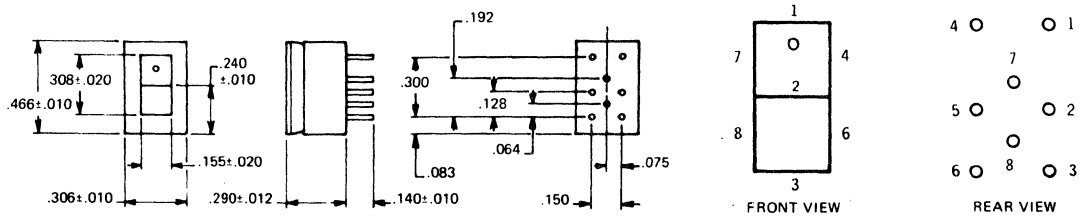

PY128

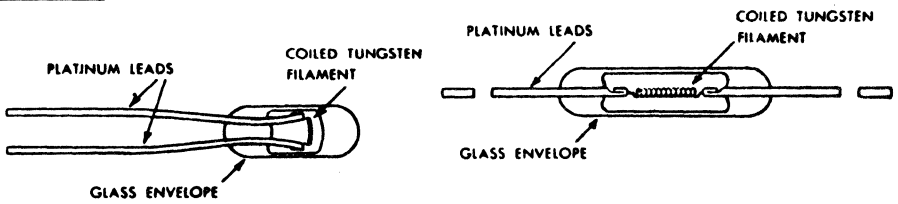

	BULB LENGTH	BULB DIA	LEAD DIA
PY128	.080	.030	.004
PY128a	.070	.015	.003
PY128b	.125	.030	.005
PY128c	.250	.040	.005

PY129

	H HEIGHT	W WIDTH	D DEPTH
PY129	.375	.335	.312
PY129a	.465	.375	.312

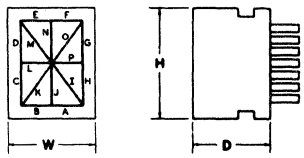

PY129 PY129a

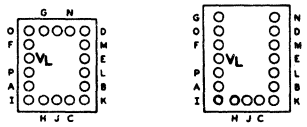

PY130

(PM)

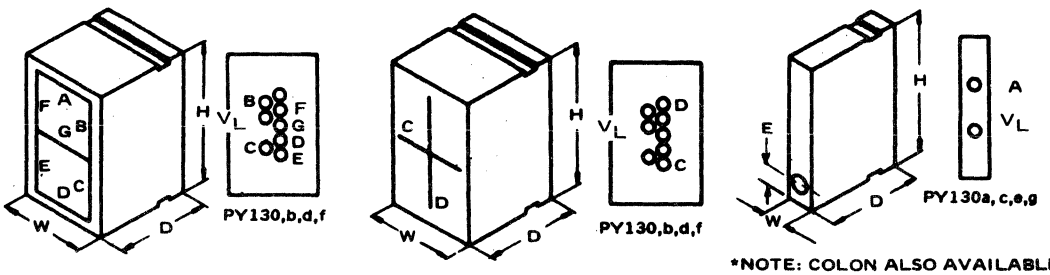

	H	W	D	E
PY130	.305	.225	.312	
PY130a	.305	.075	.312	.085
PY130b	.375	.275	.312	
PY130c	.375	.075	.312	.065
PY130d	.468	.306	.312	
PY130e	.465	.100	.312	.085
PY130f	.625	.425	.312	
PY130g	.625	.100	.312	.085

*NOTE: COLON ALSO AVAILABLE

49. OUTLINE DRAWINGS

PY132

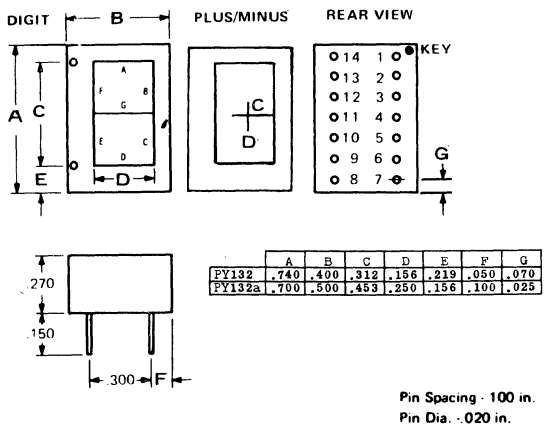

	A	B	C	D	E	F	G
PY132	.740	.400	.312	.156	.219	.050	.070
PY132a	.700	.500	.453	.250	.156	.100	.025

Pin Spacing - 100 in.
Pin Dia. -.020 in.

PY133

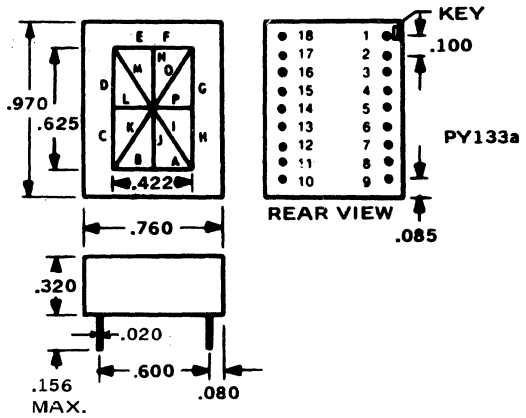

PY134

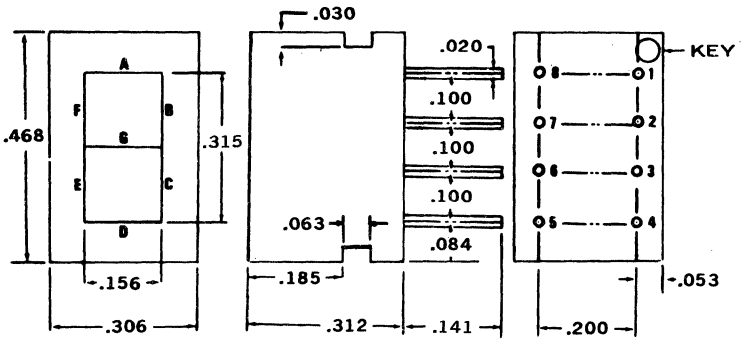

PY135

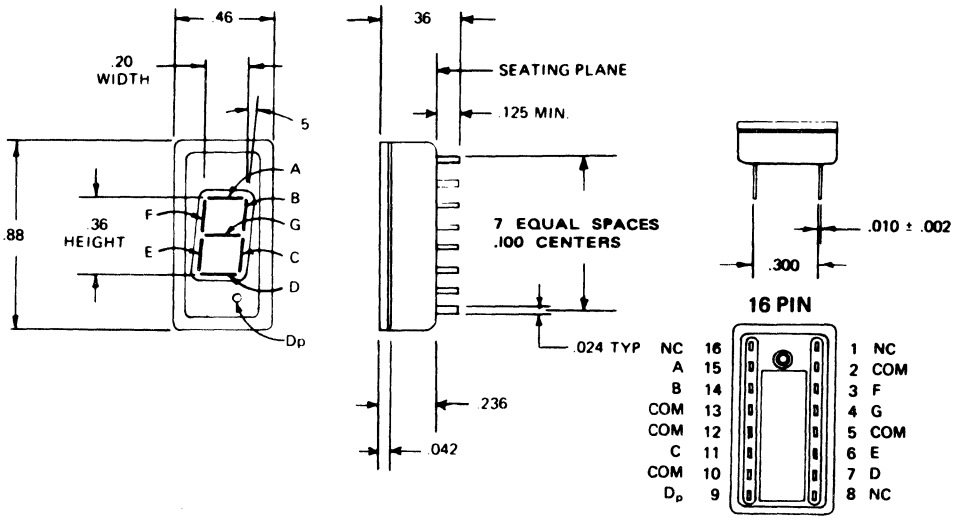

PY135a – HAS NO METAL MASK OR DECIMAL.

NOTES:

1. COMMON PINS 2, 5, 10, 12, 13 MUST BE INTERCONNECTED.
2. MOUNTS IN 16 PIN DIP SOCKET OR SOLDER TO PRINTED CIRCUIT BOARD

49. OUTLINE DRAWINGS

PY136

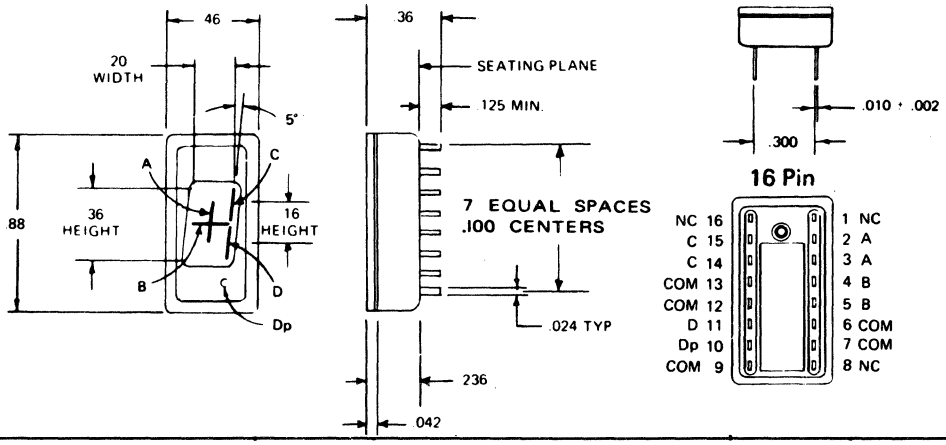

PY162

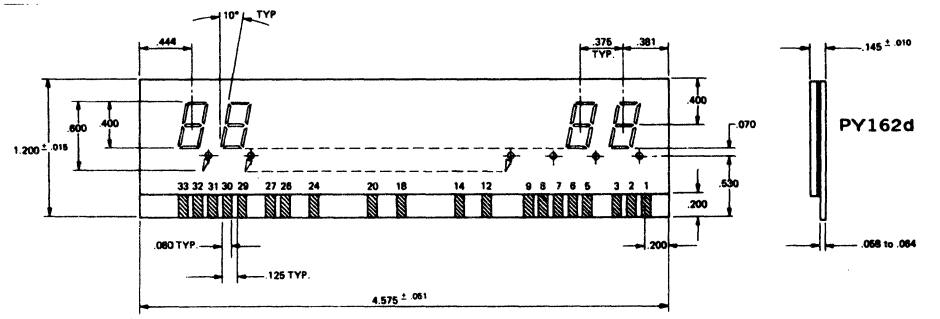

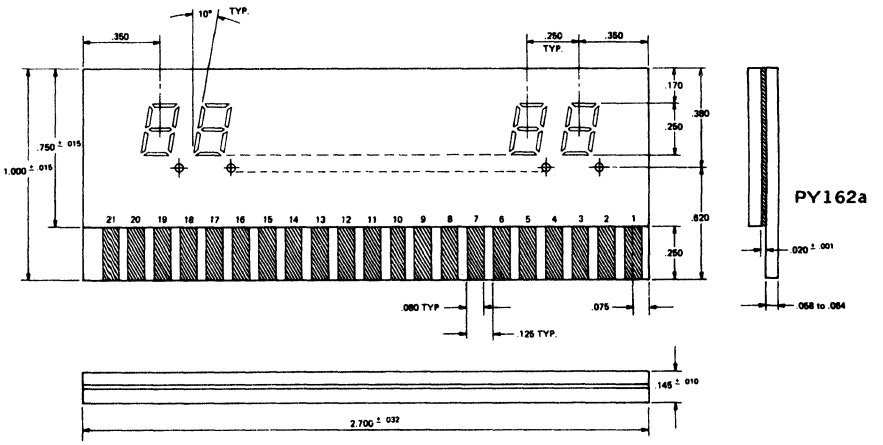

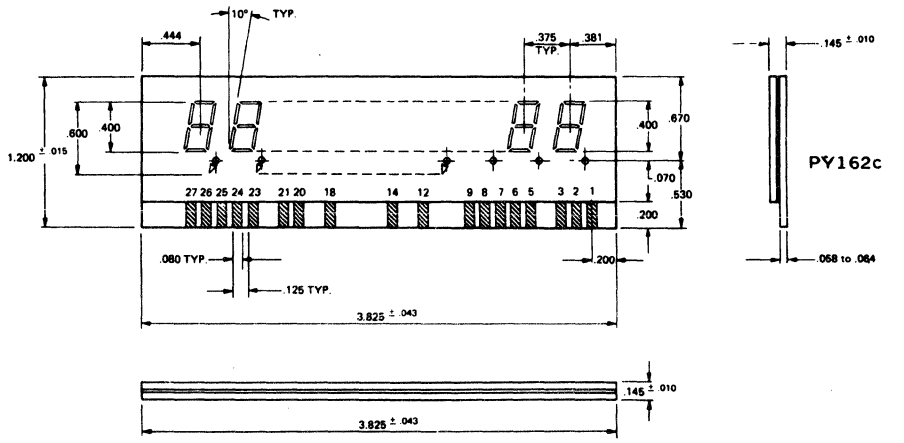

49. OUTLINE DRAWINGS

PY168

	A	B	C	D	E	F	G	H	I	J	K	L	M
PY168	.148	.669	.167	.059Ø	.019	.100	.326	.100	.086	.216	.017Ø	.224	.354
PY168a	.287	.760	.167	.059Ø		.100	.496	.100	.125	.320	.019Ø	.100	
PY168b	.148	.669	.167	.059Ø	.020	.096	.327	.100	.087	.217	.018Ø	.224	.370
PY168c	.126	.669	.167	.059Ø	.020	.096	.295	.100	.087	.217	.018Ø	.224	.370

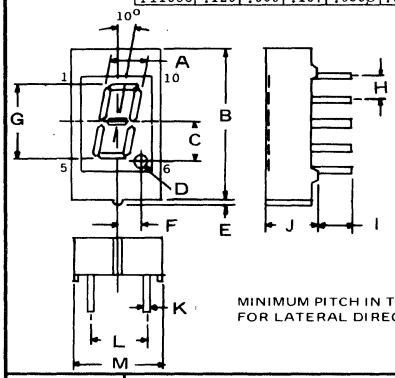

MINIMUM PITCH IN THE ARRAY FOR LATERAL DIRECTION IS .433.

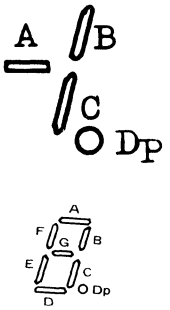

PY169

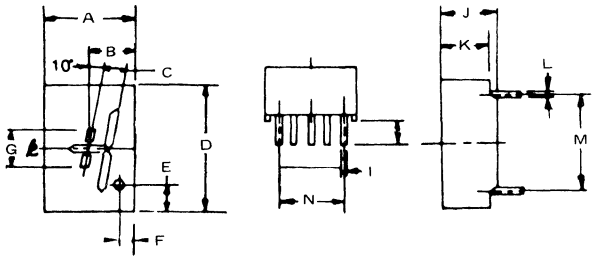

	A	B	C	D	E	F	G	H	I	J	K	L	M	N
PY169	.354			.669	.167			.086		.216		.017	.224	.224
PY169a	.560	.294	.144	.760	.167	.095	.228	.125	.020	.320	.285	.008	.599	.100

PY171

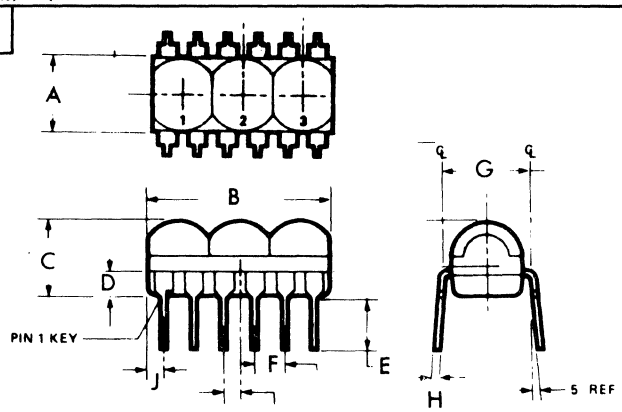

	A	B	C	D	E	F	G	H	J
PY171	.240 .260	.605 MAX	.260 MAX	.070	.150 .190	.100 TYP	.290 .310	.010	
PY171a	.256 MAX	.591 MAX	.236 MAX	.070	.158	.100	.295	.013	.024

PY172

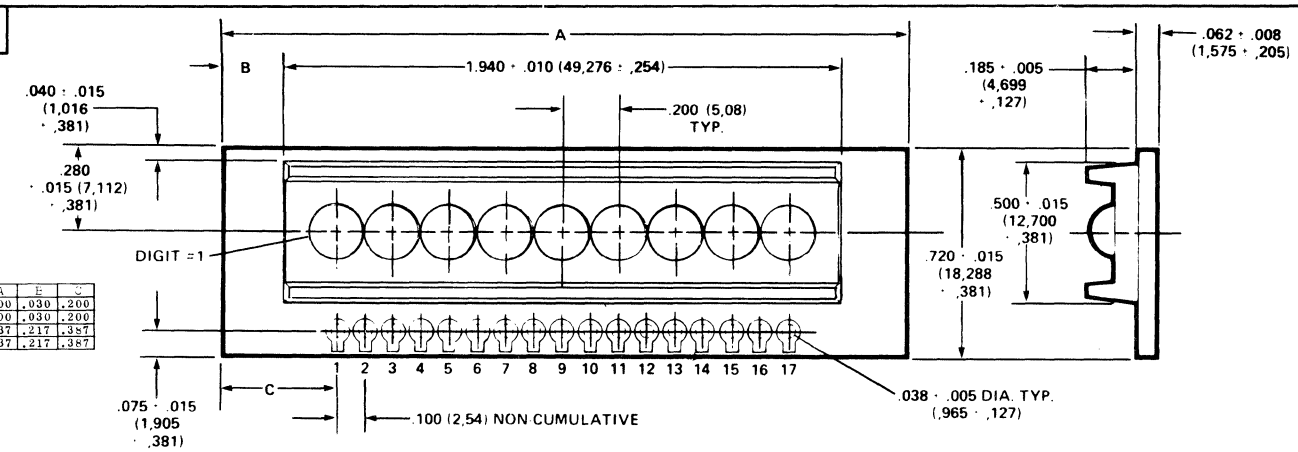

	A	B	C
PY172	2.00	.030	.200
PY172a	2.00	.030	.200
PY172b	2.37	.217	.387
PY172c	2.37	.217	.387

PY176

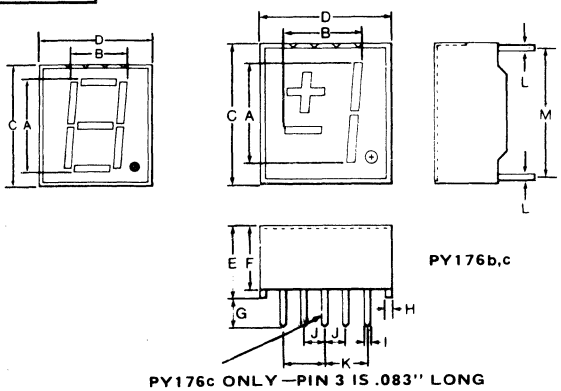

	A	B	C	D	E	F	G	H	I	J	K	L	M
PY176	.500	.299	.653	.599	.338	.315	.122	.019	.019	.100	.200	.009	.600
PY176a	.500	.300	.645 .655	.590 .600	.330 .340	.295 .305	.170	.020	.016 .019	.090 .110	.190 .210	.010	.600
PY176b c	.500	.370	.645 .655	.590 .600	.330 .340	.295 .305	.170	.020	.016 .019	.090 .110	.190 .210	.010	.600
PY176d	.600	.330	.850	.600	.335	.305	.270			.100	.200		.700
PY176e	.362		.545 .555	.290 .310	.330 .340	.300 .310	.130 .170	.013 TYP	.016 .020	.100 TYP	.200		.200
PY176f	.300	.203	.590	.400	.255	.216	.155	.035	.019	.100	.200	.0098	.300
PY176g	.559	.320	.748	.480	.315	.265	.155		.020	.100 TYP		.010	.598
PY176h	.567	.315	.748	.480	.315		.138 MIN		.020	.100		.010	.598
PY176i	.500	.310	.640 .660	.490 .500	.325 .335	.280 .290	.160 MIN	.030 NOM	.016 .020	.100 TYP		.008 .012	.590 .610
PY176k	.500	.310	.745 .765	.555 .575	.325	.285	.125 MIN		.020 TYP	.100			.600
PY176m	.531		.683 .695	.482 .494	.272 .280	.236	.118 .138		.018	.100		.010	.600
PY176n	.303	.200	.748	.410	.228	.181		.024		.098			.315
PY176p	.500	.268	.787	.504	.315		.158 .197		.018	.100 TYP			.600
PY176q	.500	.283	.748	.496	.315					.100	.200		.600

49. OUTLINE DRAWINGS

PY190

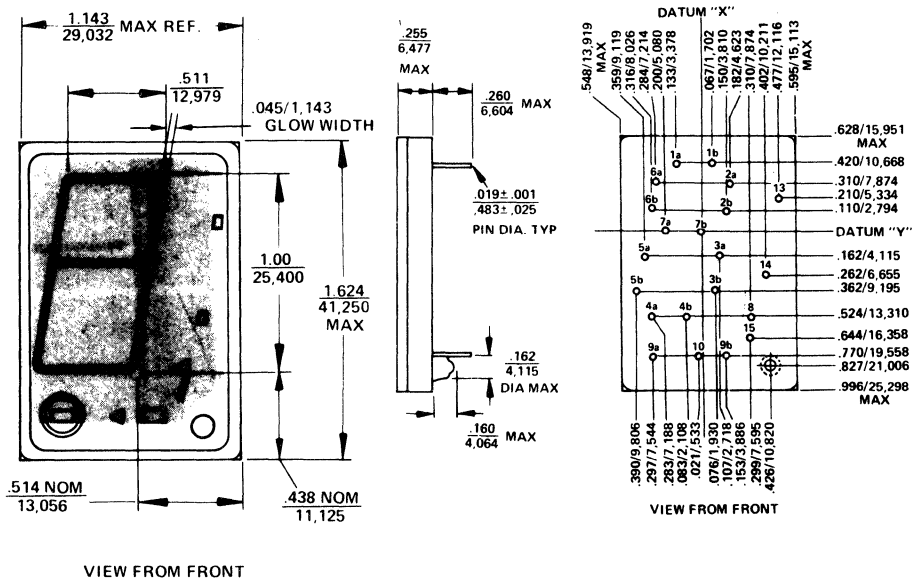

PY191

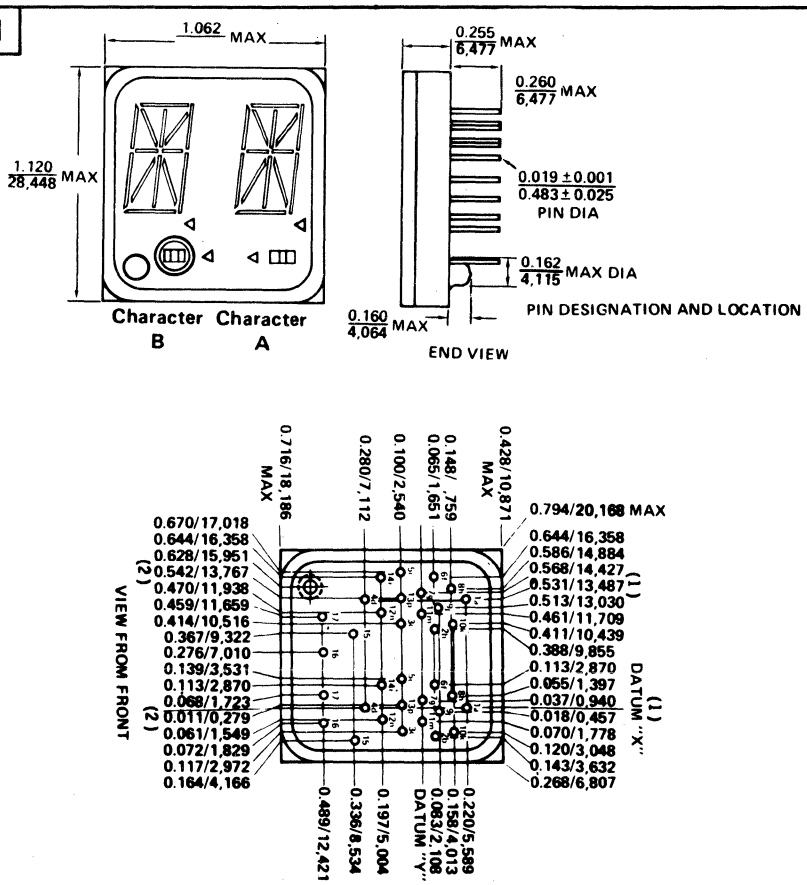

PY192

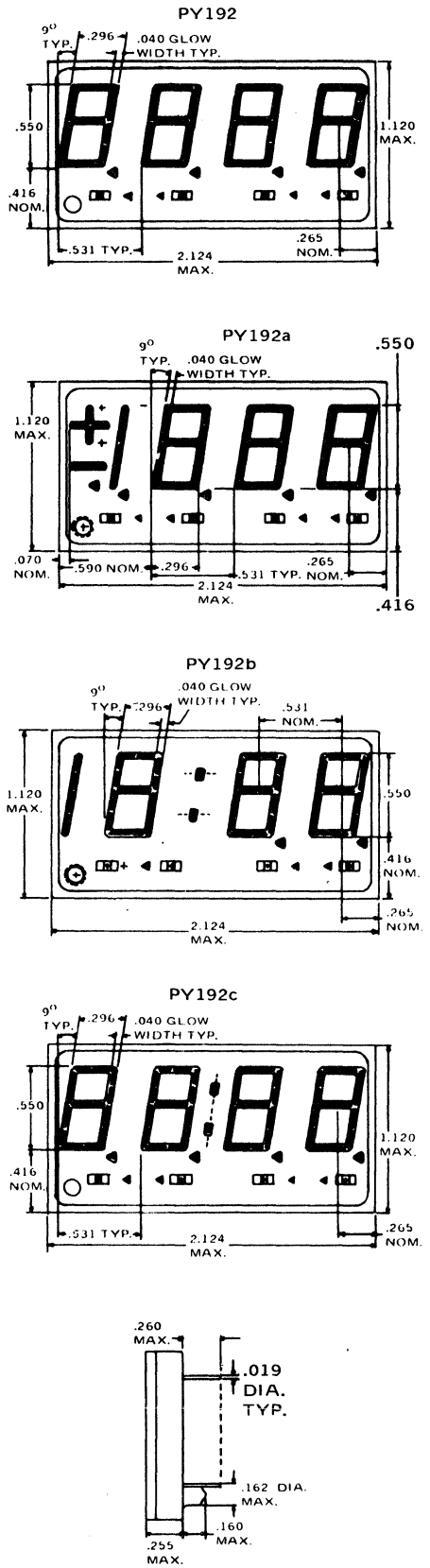

49. OUTLINE DRAWINGS

PY225

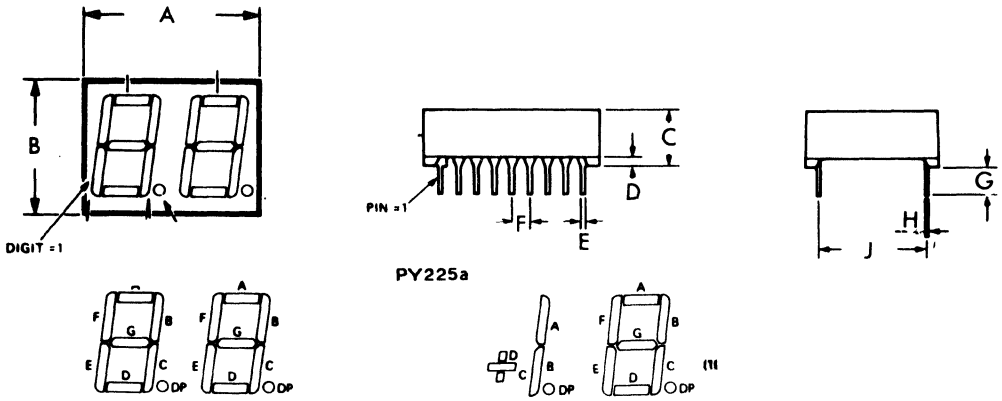

	A	B	C	D	E	F	G	H	J
PY225	.985	.750	.315	.050	.020	.100	.155	.010	.600
PY225a	.985	.750	.315	.050	.020	.100	.155	.010	.600
PY225c	.945	.709	.276	.040 TYP	.020 TYP	.100	.200	.010 TYP	.600
PY225d	.945	.748	.256		.020	.100	.138 MIN	.010	.598
PY225e	.984	.748	.256		.020	.100	.138 MIN	.010	.598
PY225f	1.00 MAX	.840 MAX	.285		.018 .022	.100 TYP	.160 MIN	.008 .012	.600
PY225g	.859	.661	.276	.039	.020	.100	.256		.585
PY225h	.957	.756	.276	.039	.020	.100	.256		.571
PY225i	.984	.748	.315	.039	.020	.100	.256		.600
PY225k	1.170	.870	.340	.030		.100	.300		.700
PY225l	.984 .996	.685 .701	.272 .287	.028 MAX	.018 .022	.100		.010 .014	.592 .608

PY308

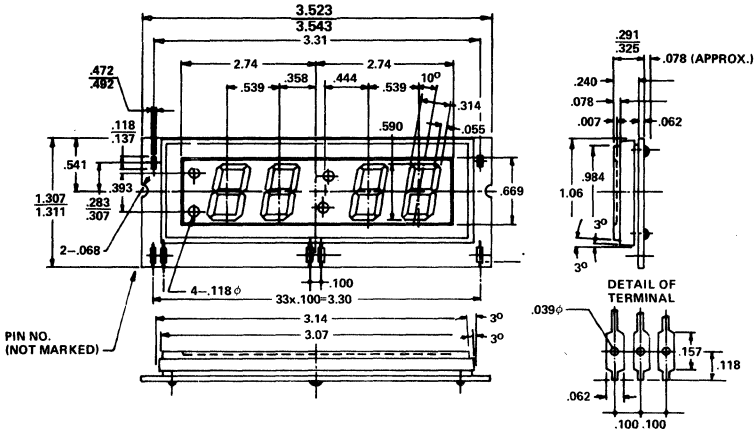

12/24 HOURS TYPE & DISPLAYED FONT

TYPE	FULLY DISPLAYED FONT
PY308	88:88
PY308a	:88:88
PY308b	18 88
PY308c	:18 88

49. OUTLINE DRAWINGS

PY261

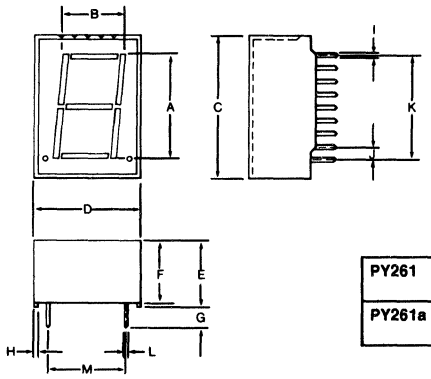

	A	B	C	D	E	F	G	H	I	J	K	L	M
PY261	.800 TYP	.480 TYP	1.080 1.100	.820 .840	.490 .510	.455 .475	.150 TYP	.027 TYP	.016 .020	.090 .110	.690 .710	.010 TYP	.600 TYP
PY261a	.800	.436	1.080 1.100	.786 MAX	.320 .340	.280 .300	.240 MIN		.020	.090 .110	.700 TYP	.015	.590 .610

PY262

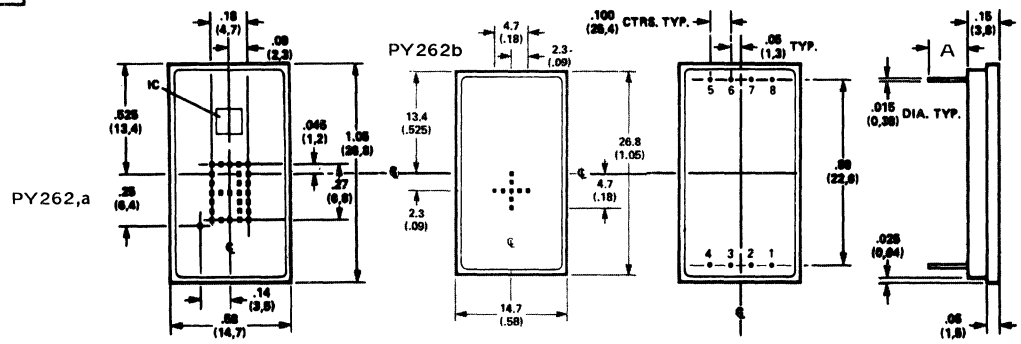

	A
PY262	.190(4.80)
PY262a	.272(6.91)
PY262b	.272(6.91)

INCH (MM)

PY263

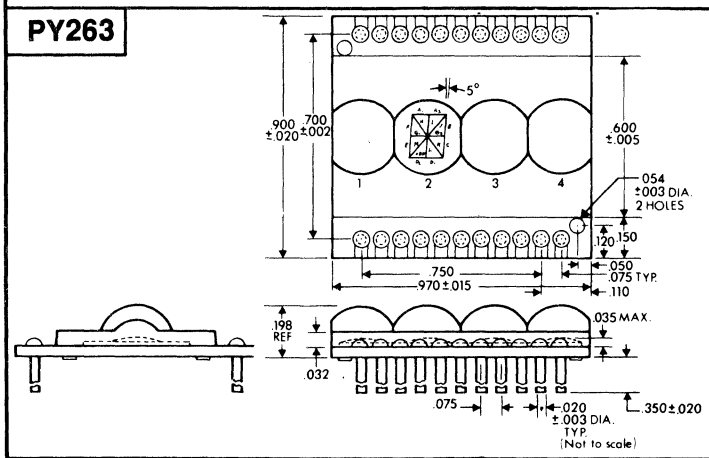

PY264

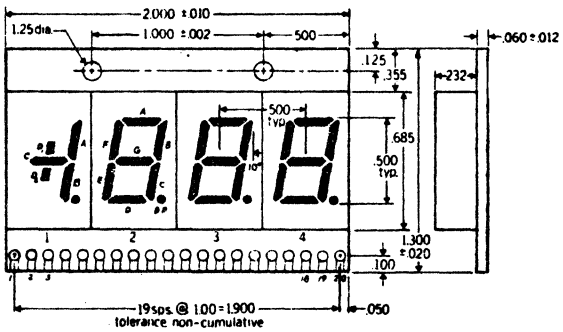

PY265

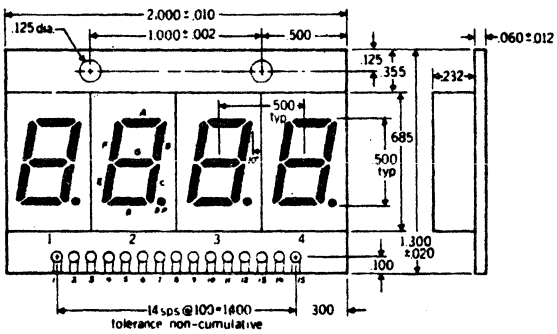

PY311

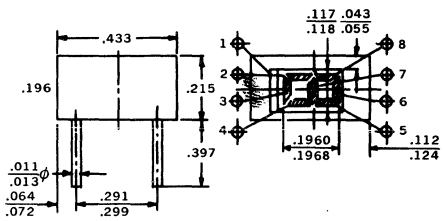

49. OUTLINE DRAWINGS

PY270

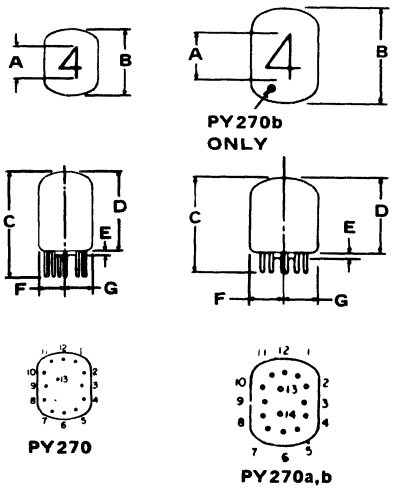

	A	B	C	D	E	F	G
PY270	.310 NOM	.625 MAX	1.000 MAX	.750 MAX	.064 MAX	.235 MAX	.235 MAX
PY270a	.610 NOM	1.020 MAX	1.120 MAX	.862 MAX	.064 MAX	.395 MAX	.395 MAX
PY270b	.610 NOM	1.020 MAX	1.120 MAX	.892 MAX	.064 MAX	.395 MAX	.395 MAX
PY270c	.610 NOM	1.020 MAX	1.358 MAX	1.100 MAX	.064 MAX	.395 MAX	.395 MAX

PY271

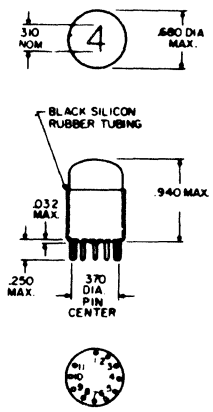

PY272

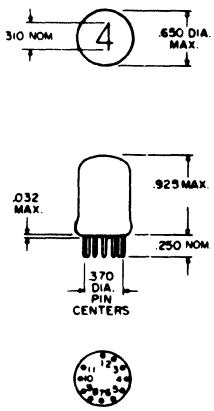

PY273

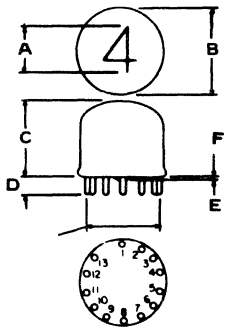

	A	B	C	D	E	F
PY273	.610 NOM	1.080 MAX	1.125 MAX	.250 NOM	.064 MAX	.656
PY273a	.808 NOM	1.350 MAX	1.212 MAX	.300 NOM	.064 MAX	.656

PY274

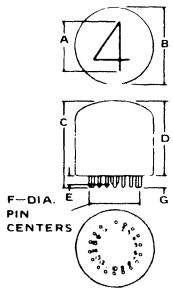

	A	B	C	D	E	F	G
PY274	1.375 NOM	2.060 MAX	2.280 MAX	1.980 MAX	.400 MAX	1.375	.300 NOM
PY274a	2.000 NOM	3.100 MAX	2.650 MAX	2.350 MAX	.400 MAX	1.375	.300 NOM

PY275

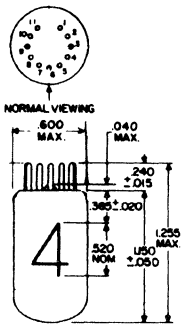

PY276

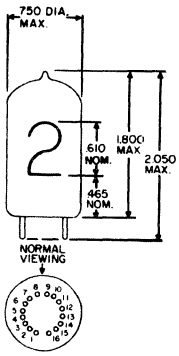

PY277

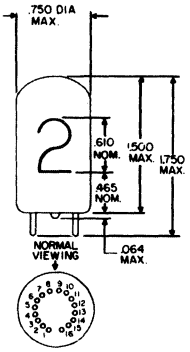

PY278

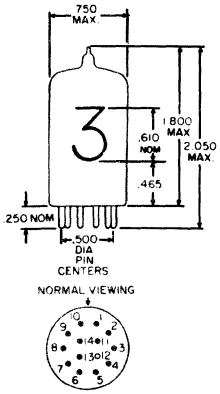

PY279

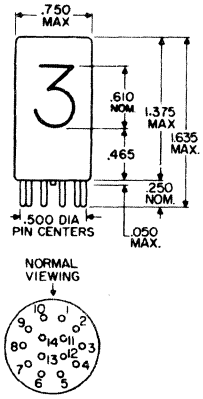

PY280

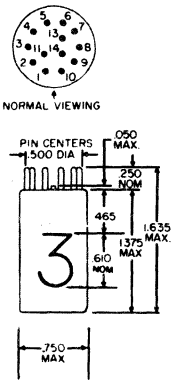

49. OUTLINE DRAWINGS

PY281

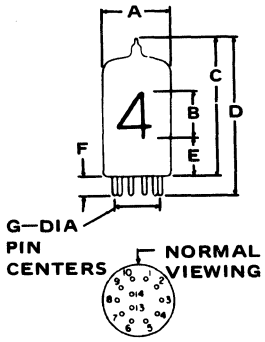

	A	B	C	D	E	F	G
PY281	.875 MAX	.610 NOM	1.812 MAX	2.062 MAX	.530	.250 NOM	.500
PY281a	.875 MAX	.808 NOM	1.812 MAX	2.062 MAX	.530	.250 NOM	.500

PY282

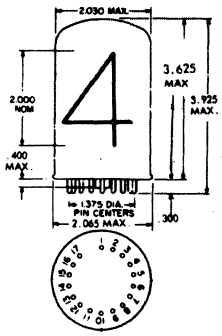

PY309

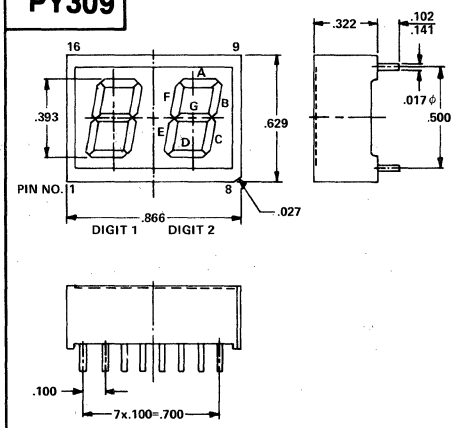

PY292

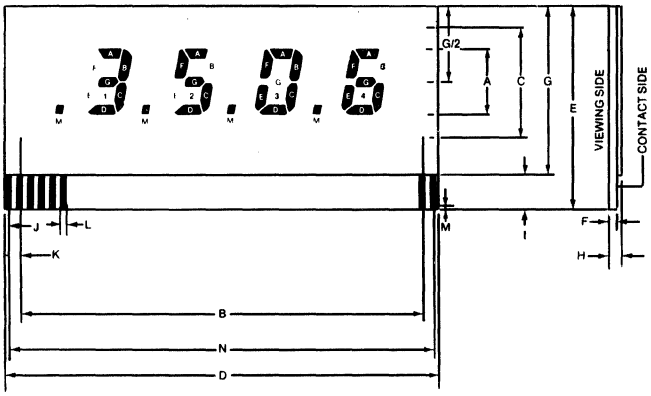

	PY292	PY292 a	PY292 b	PY292 c	PY292 d	PY292 e	PY292 f	PY292 g
A	.3 7,6	.4 10,1	.5 12,7	.6 15,2	.3 7,6	.4 10,1	.5 12,7	.6 15,2
B	1.00 25,4	1.00 25,4	1.25 31,7	1.25 31,7	1.75 44,4	2.00 50,8	2.25 57,15	2.50 63,5
C	.45 11,4	.60 15,2	.70 17,7	.80 20,3	.45 11,4	.60 15,2	.70 17,7	.80 20,3
D	1.25 31,75	1.25 31,75	1.50 38,10	1.50 38,10	2.00 50,80	2.25 57,15	2.50 63,5	2.75 69.85
E	.95 24,13	1.10 27,94	1.25 31,75	1.35 34,29	.95 24,13	1.10 27,94	1.25 31,75	1.35 34,29
F	.048 1,219	.048 1,219	.048 1,219	.048 1,219	.048 1,219	.048 1,219	.048 1,219	.048 1,219
D	1.25 31,7	1.25 31,7	1.50 38,1	1.50 38,1	2.00 50,8	2.25 57,15	2.50 63.5	2.75 69.85
G	.70 17,78	.85 21,59	1.00 25,4	1.10 27,94	.70 17,78	.85 21,59	1.00 25,4	1.10 27,94
H	.130 3,3	.130 3,3	.130 3,3	.130 3,3	.130 3,3	.130 3,3	.130 3,3	.130 3,3
I	.250 6,35	.250 6,35	.250 6,35	.250 6,35	.250 6,35	.250 6,35	.250 6,35	.250 6,35
J	.025 0,635	.025 0,635	.025 0,635	.025 0,635	.025 0,635	.025 0,635	.025 0,635	.025 0,635
K	.050 1,27	.050 1,27	.050 1,27	.050 1,27	.050 1,27	.050 1,27	.050 1,27	.050 1,27
L	.030 0.762	.030 0.762	.030 0,762	.030 0,762	.030 0,762	.030 0,762	.030 0,762	.030 0,762
M	.040 1,016	.040 1,016	.040 1,016	.040 1,016	.040 1,016	.040 1,016	.040 1,016	.040 1,016
N	1.20	1.20	1.45	1.45	1.95	2.20	2.45	2.70
NUMBER OF PADS		25	25	30	30	40	45	50	55

Vertical Height: Characters on 10° Slant

**Within I dimension ± .010

***Last pad position available, not necessarily last pad used

INCH
mm

PY408

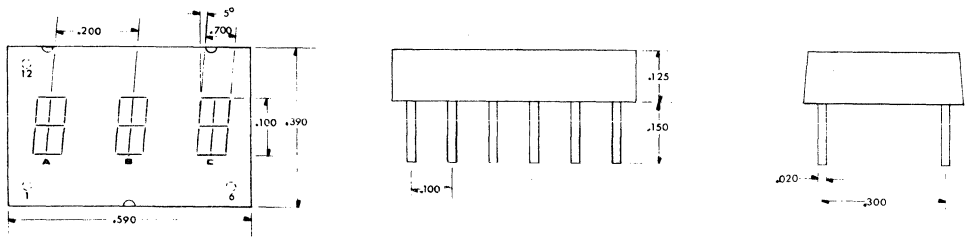

49. OUTLINE DRAWINGS

PY331

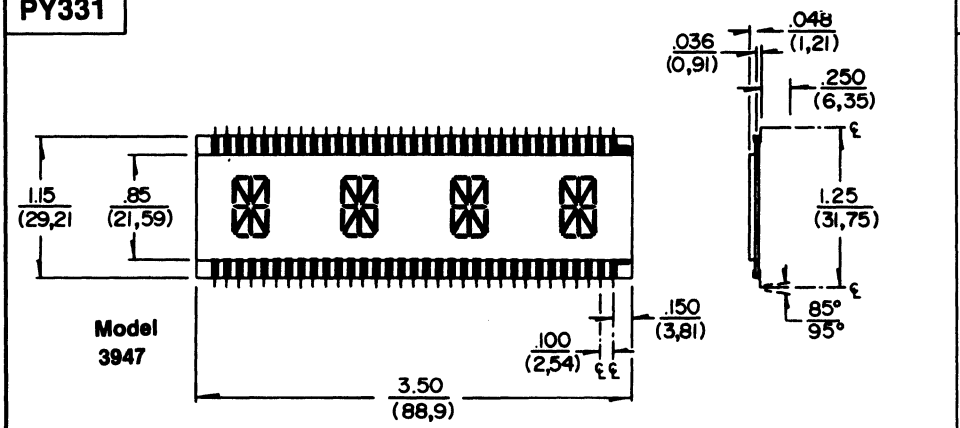

PY354

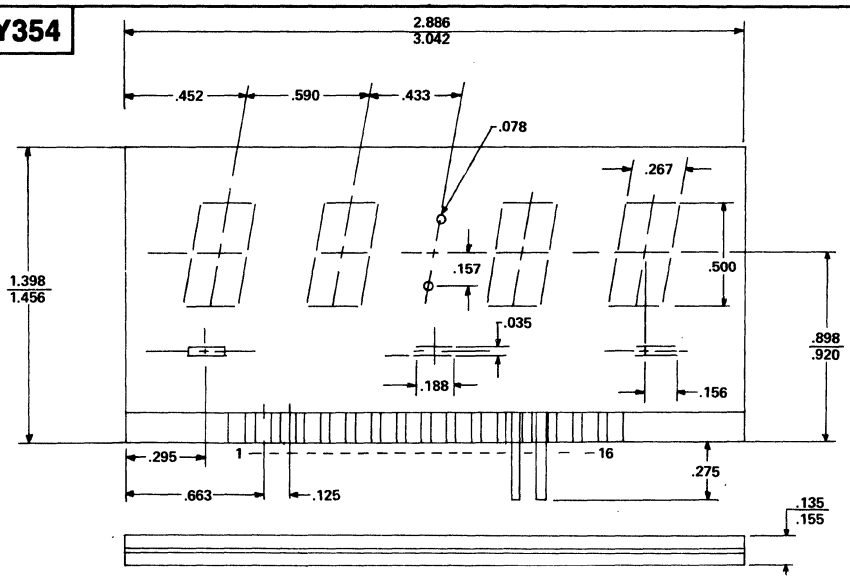

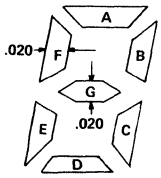

PY355

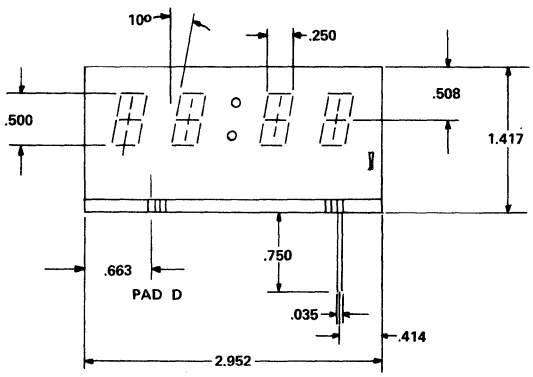

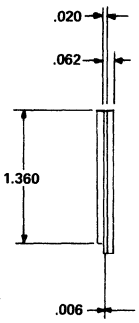

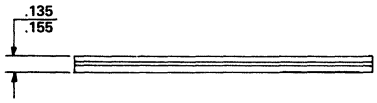

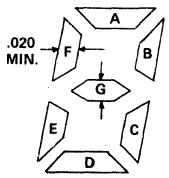

49. OUTLINE DRAWINGS

PY362

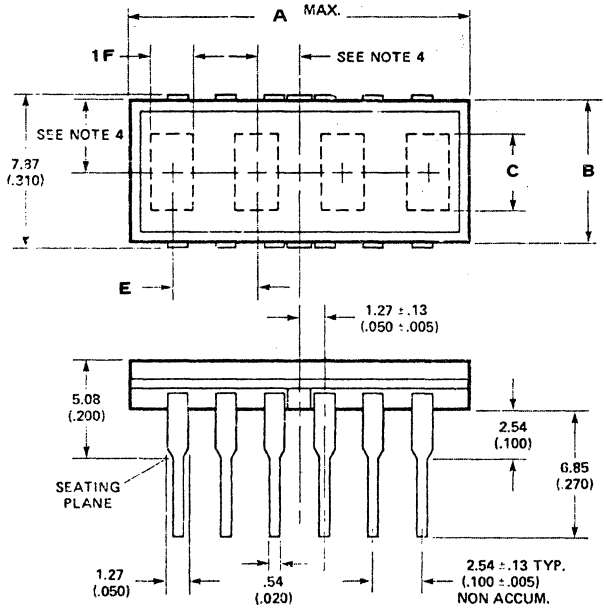

NOTES;

1. Dimensions in mm(inches)
2. Unless otherwise specifies the tolerance on all dimensions is ±.38 mm (±.015").
3. Lead material is gold plated copper alloy.
4. Characters are centered with respect to leads within ±.13mm (±.005).

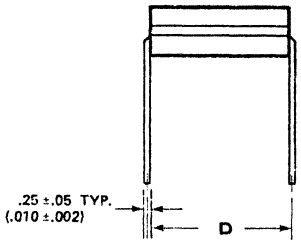

	A	B	C	D	E	F	Notes	# Pins
PY362	.699	.290	.146	.300	.175	.083	4	12
PY362a	.790	.332	.192	.250	.197	.112	3	12

PY363

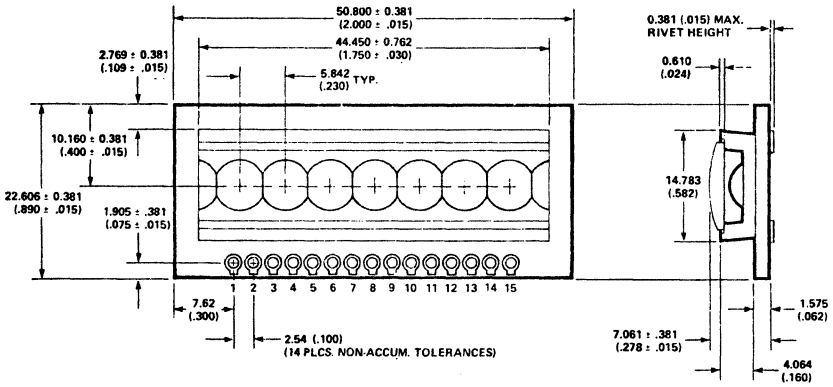

PY364

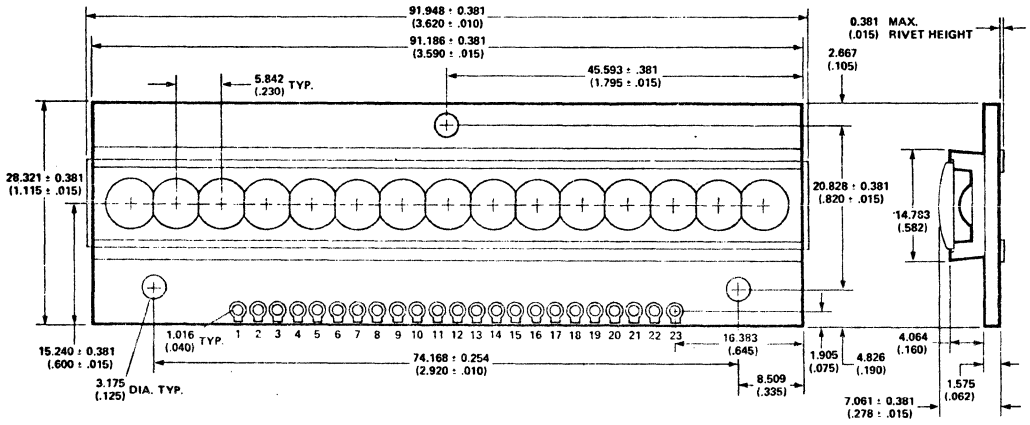

49. OUTLINE DRAWINGS

PY404

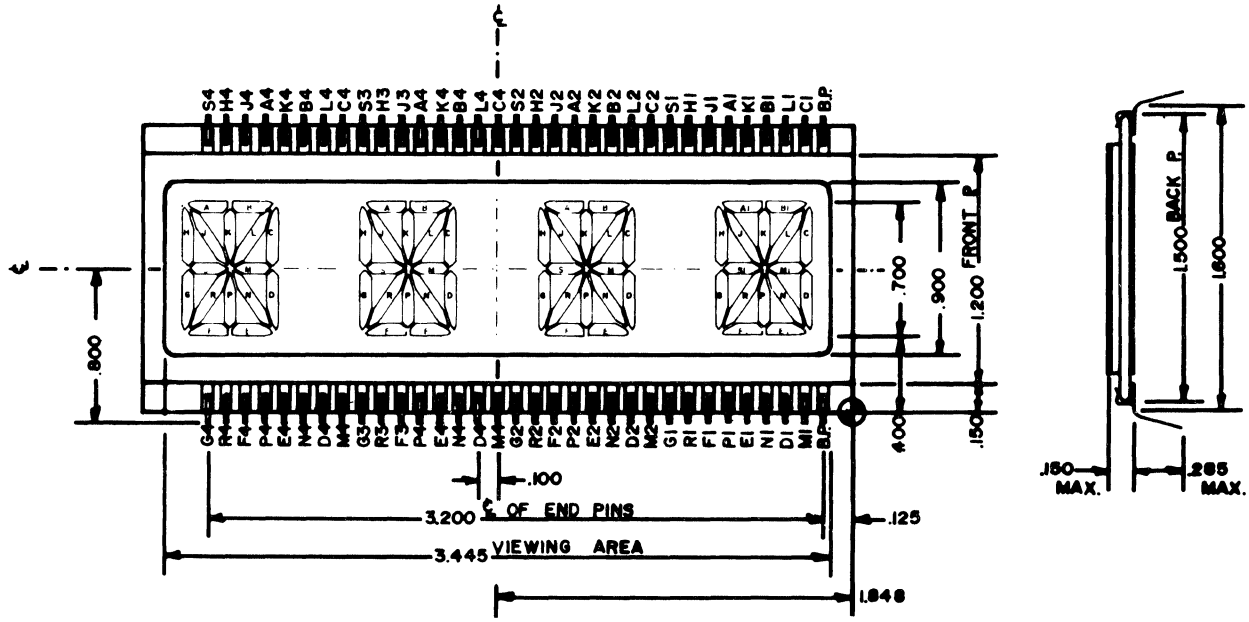

PY373

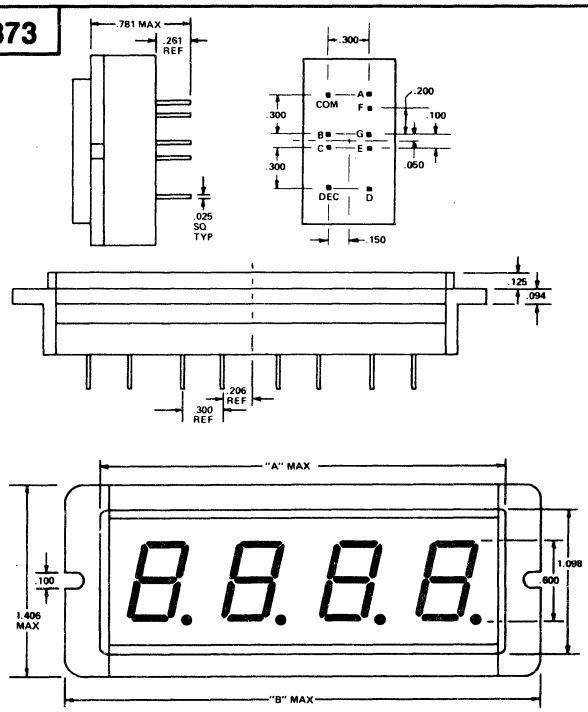

	A	B
PY373	1.606	2.098
PY373a	2.323	2.815
PY373b	3.040	3.532
PY373c	3.757	4.249
PY373d	4.474	4.966
PY373e	5.191	5.683
PY373f	5.908	6.400
PY373g	6.625	7.117
PY373h	7.342	7.834

49. OUTLINE DRAWINGS

PY409

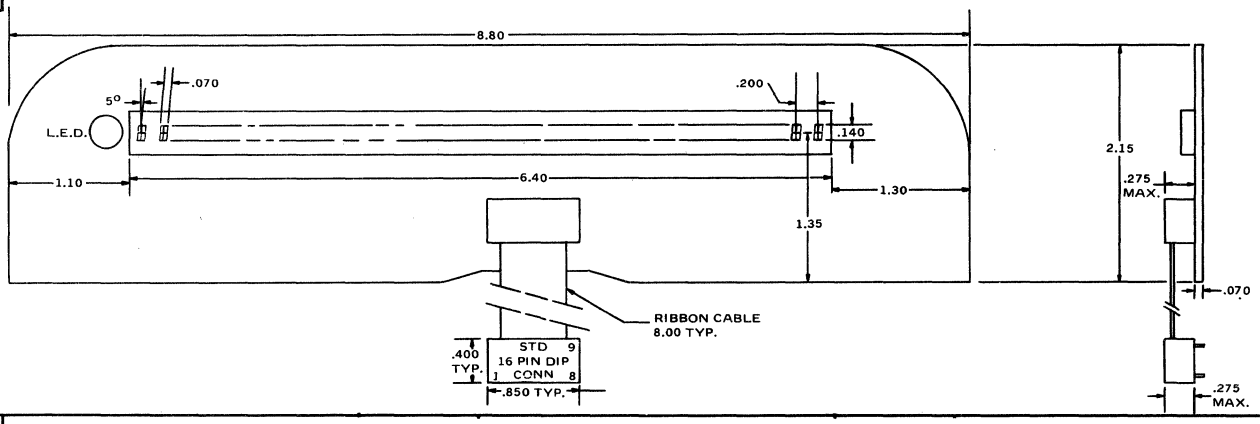

PY412

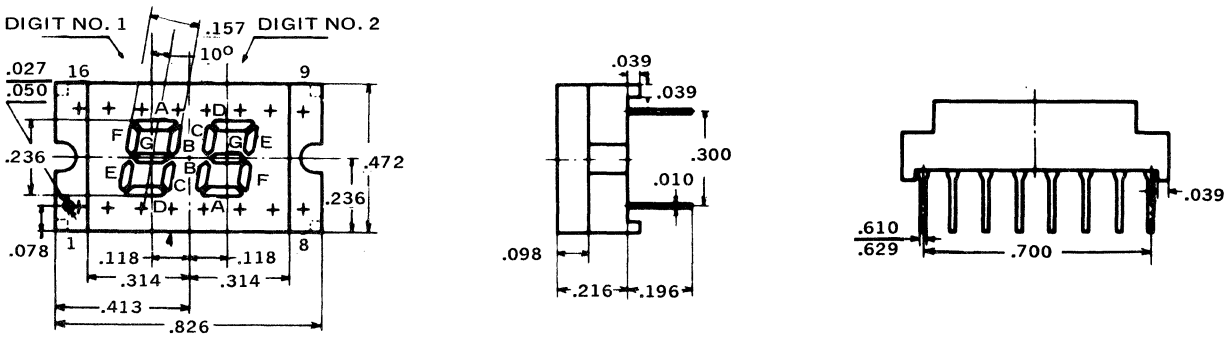

PY469

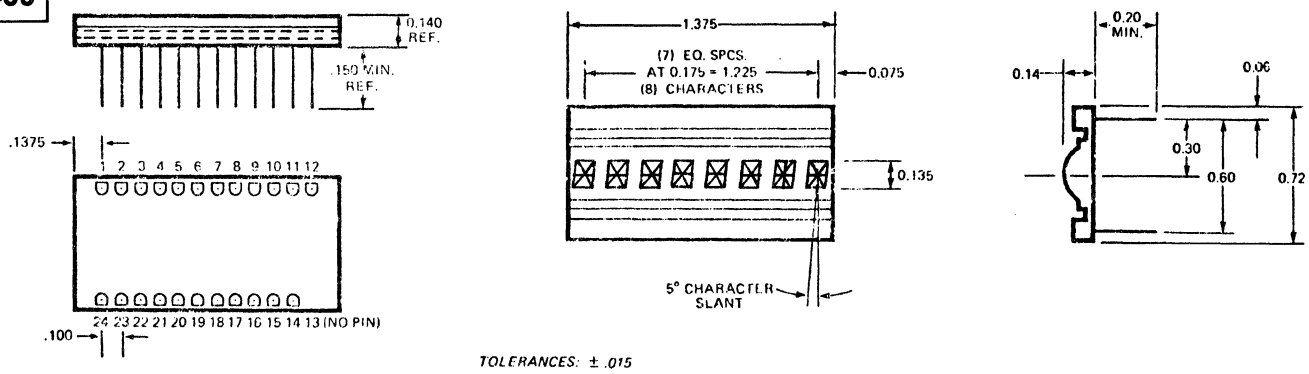

TOLERANCES: ± .015

PY471

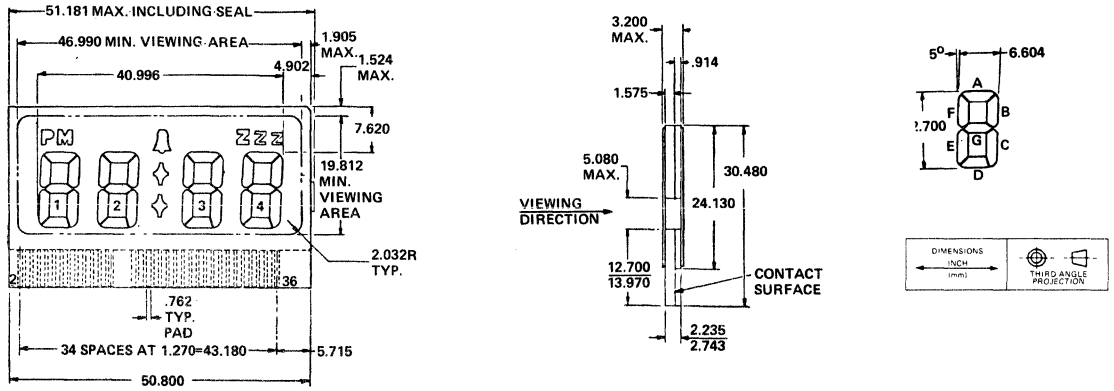

DIMENSIONS IN "MM"

49. OUTLINE DRAWINGS

PY418

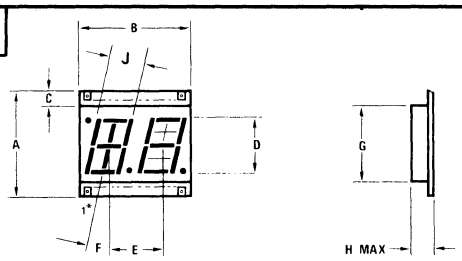

*Pin 1 as shown, pin out follows counterclockwise

	DIGIT SIZE	A	B	C	D	E	F	G	H	J
PY418	.300	.850	.800	.175	.300	.400	5°	.500	.225	.188
PY418a	.500	1.500	1.000	.175	.500	.500	10°	.700	.280	.300
PY418b	.700	1.250	1.200	.180	.700	.600	10°	.890	.300	.380

PY419

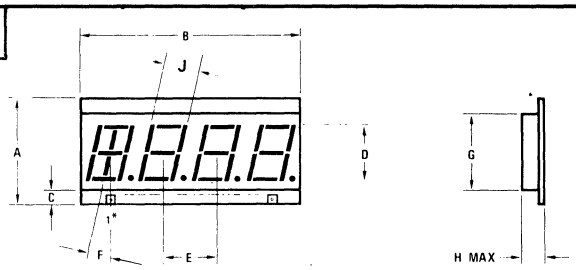

*Pin 1 as shown, pin out follows counterclockwise

	DIGIT SIZE	A	B	C	D	E	F	G	H	J
PY419	.300	.830	1.590	.165	.300	.400	5°	.500	.225	.188
PY419a	.500	1.000	1.990	.180	.500	.500	10°	.700	.280	.300
PY419b	.700	1.150	2.390	.180	.700	.600	10°	.890	.300	.380

PY421

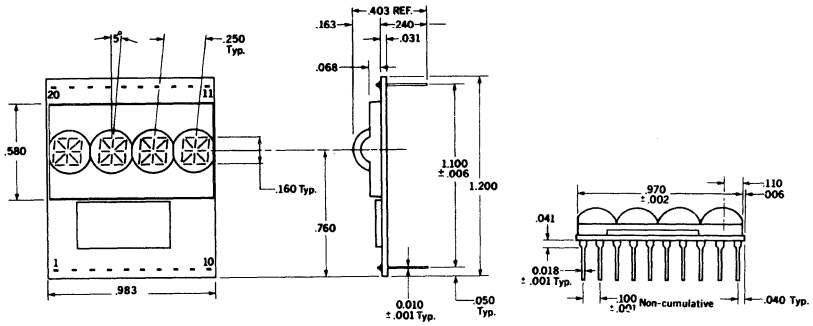

PY436

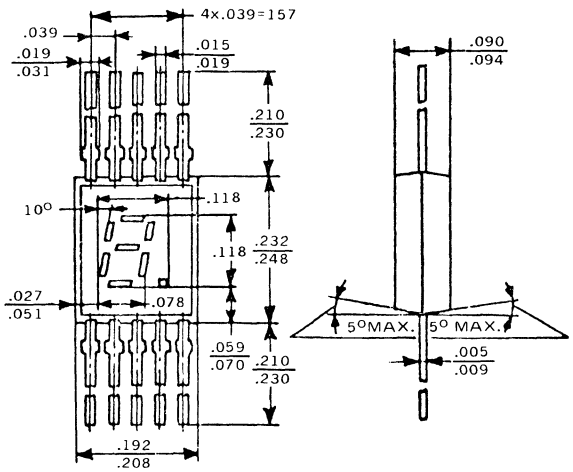

PY436a

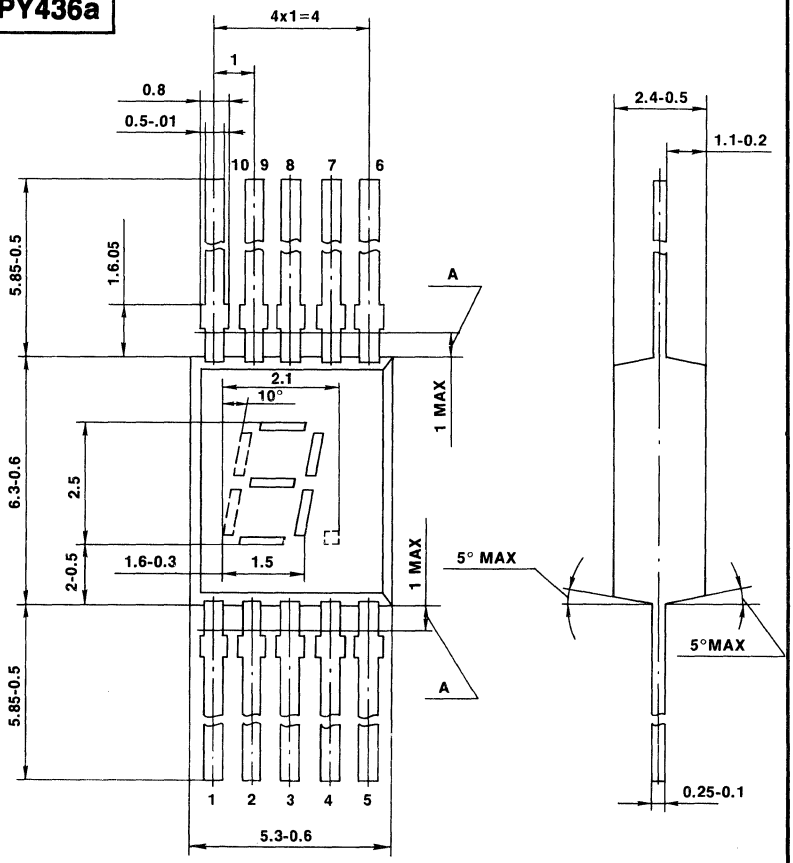

49. OUTLINE DRAWINGS

PY437

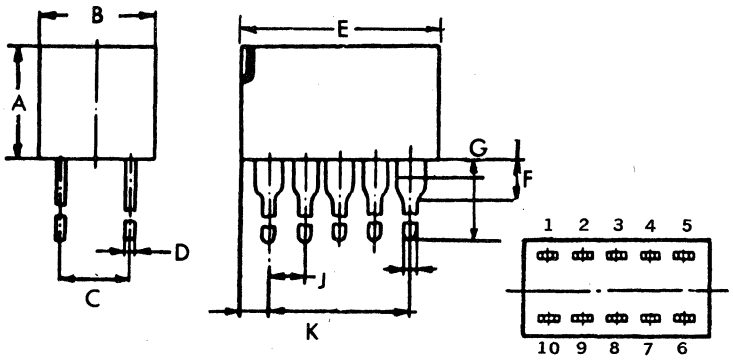

	A	B	C	D	E	F	G	H	J	K
PY437	.307	.295	.009 .013	.188 .204	.551	.037 .057	.214 .265	.015 .019	.098	.392
PY437a	.180	.390 .410	.010	.300	.740 .760	.045	.185	.020	.100	.400
PY437b	.180	.390 .410	.010	.300	.740 .760	.060	.160 MIN	.020	.100	.400
PY437c	.236	.685 .701	.012	.592 .608	.482	.035 .043	.169 .193	.019 .023	.100 TYP	.400 NOM
PY437d	.300 .330	.735 .765	.010	.585 .615	.465 .495	.050	.160 NOM	.020	.100 TYP	.400 NOM
PY437e	.331 MAX	.988	.020	.787	.703 .723		.100 MIN	.020	.100 TYP	.400 NOM

PY438

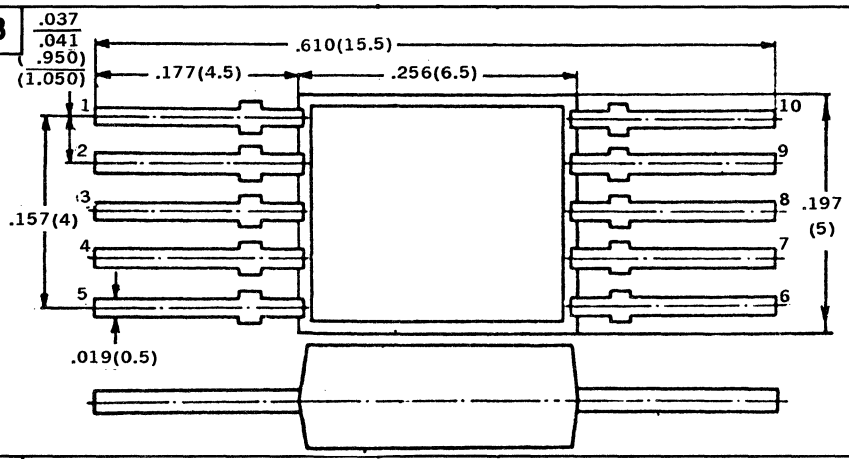

PY439

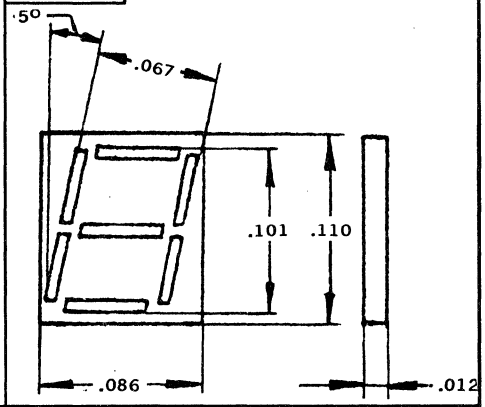

PY449

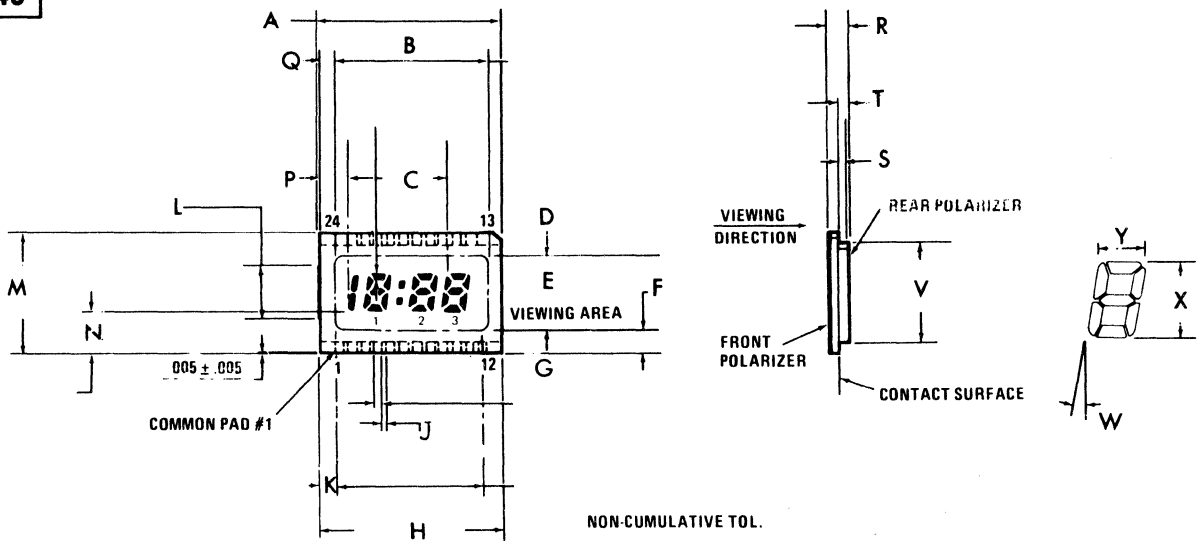

NON-CUMULATIVE TOL.

	A	B	C	D	E	F	G	H	J	K	L	M	N	P	Q	R	S	T	V	W	X	Y
PY449	.820 MAX	.705	.550	.050 R	.355 MIN	.082 MAX	.031 .039	.800 .810	.019 .027	.080 .090	.220 MAX	.515 .525	.165 .175	.125 .135	.055 MAX	.062 .082	.024 .032	.032 .044	.415 .425	9° 11°	.175 .185	.105 .115
PY449a	.820	.725 MIN	.625	.031 R	.340 MIN	.090 MAX	.031 .039	.805		.085	.220 MAX	.520	.150	.090	.040 MAX	.087 MAX	.024 .032	.035	.420	4°	.240	.127
PY449b	.605 MAX	.510 MIN	.410	.031 R	.195 MIN	.080 MAX	.015 .023	.590		.105	.200 MAX	.354	.106	.090	.040 MAX	.087 MAX	.024 .032	.035	.276	5°	.142	.082
PY449c	.705 MAX	.590 MIN		.030 R	.290 MIN	.082 MAX	.026 .034	.685 .695	.016 .024	.070	.190 MAX	.454	.147	.110	.055 MAX	.062 .082	.024 .032	.032 .044	.354	10°	.155 .165	.095 .105
PY449d		.709 MIN			.350 MIN	.085	.028 .032	.802 .812	.026 .030	.059 .067	.220	.512 .523	.150	.095	.050 TYP	.084 MAX	.024 .032		.413 .425	10°	.220	.122 TYP
PY449e		.800 MIN			.420 MIN	.075	.030 TYP	.910	.030 TYP	.055	.263	.570	.160	.110		.076	.028 TYP	.036 TYP	.490	10°	.263	.140 TYP
PY449f		.700 MIN			.350 MIN	.085	.030 TYP	.808 TYP	.028 TYP	.063 TYP	.180	.520	.147	.095	.050 TYP	.084 MAX	.028 TYP	.036 TYP	.420	10°	.180	.110 TYP
PY449g		.740 MIN			.268 MIN	.093	.035 TYP	.827 TYP	.028 TYP	.087 TYP	.200	.460	.127	.122 TYP	.040 TYP	.084 MAX	.028 TYP	.036 TYP	.354	7.5°	.200	.122 TYP

49. OUTLINE DRAWINGS

PY451

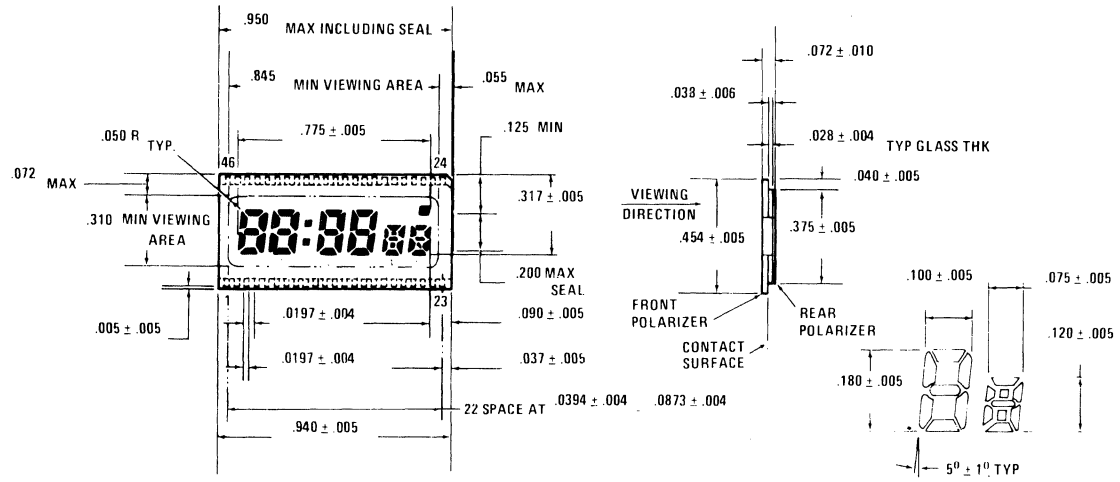

PY453

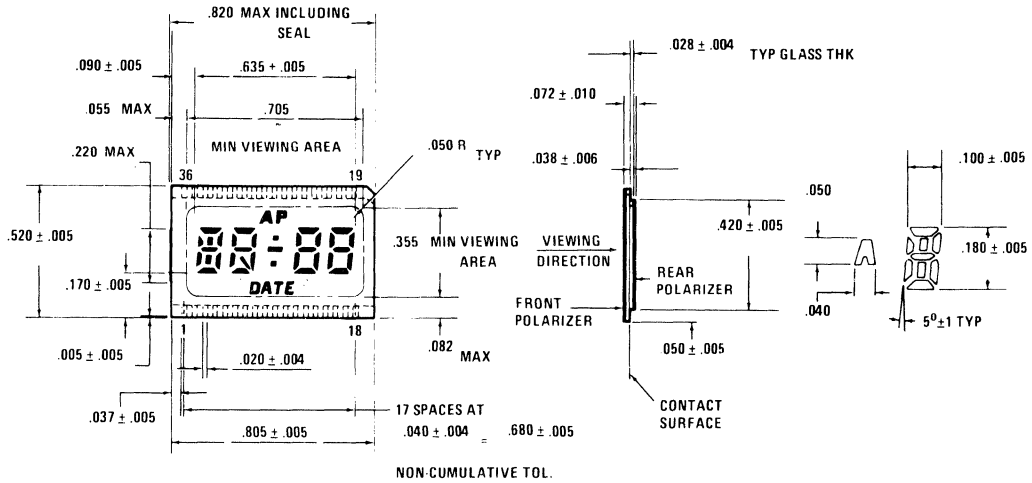

PY454

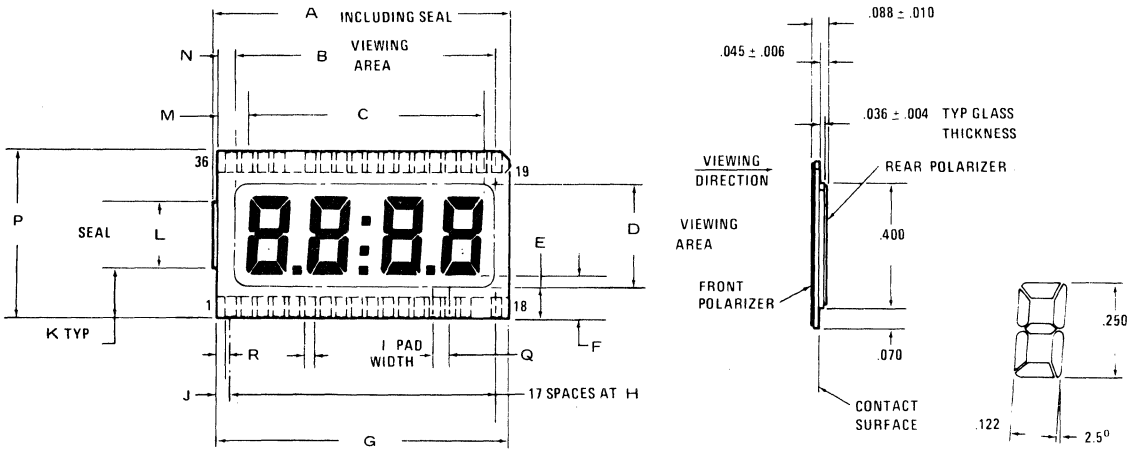

	A	B	C	D	E	F	G	H	I	J	K	L	M	N	P	Q	R
FY454	.950 MAX	.836 MIN	.750	.335	.105 MAX	.145	.936	.850	.035 TYP	.042	.135 MIN	.250	.092	.055 MAX	.540	.050	.025
FY454a	.950 MAX	.856 MIN	.775	.320	.110	.145	.936	.850	.035 TYP	.042	.135 MIN	.250	.080	.040	.540	.050	.025

49. OUTLINE DRAWINGS

PY455

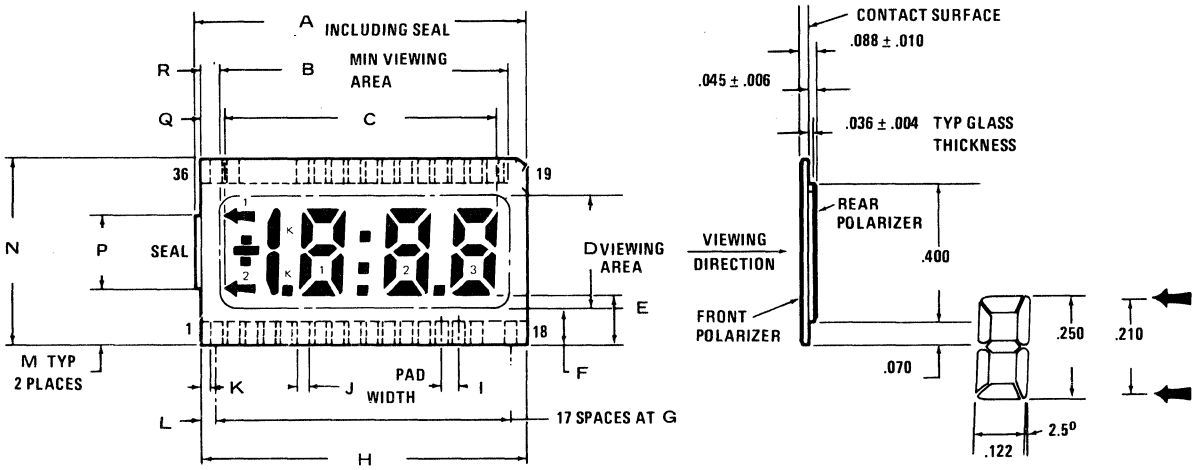

PY455a

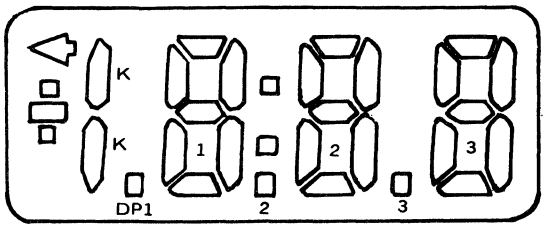

	A	B	C	D	E	F	G	H	I	J	K	L	M	N	P	Q	R
PY455	.950 MAX	.836 MIN	.780	.335	.145	.105	.850	.936	.050	.035	.025	.042	.135	.540	.250	.070	.055
PY455a	.950 MAX	.856 MIN	.775	.320	.145	.110	.850	.936	.050	.035	.025	.042	.135	.540	.250	.080	.040

PY456

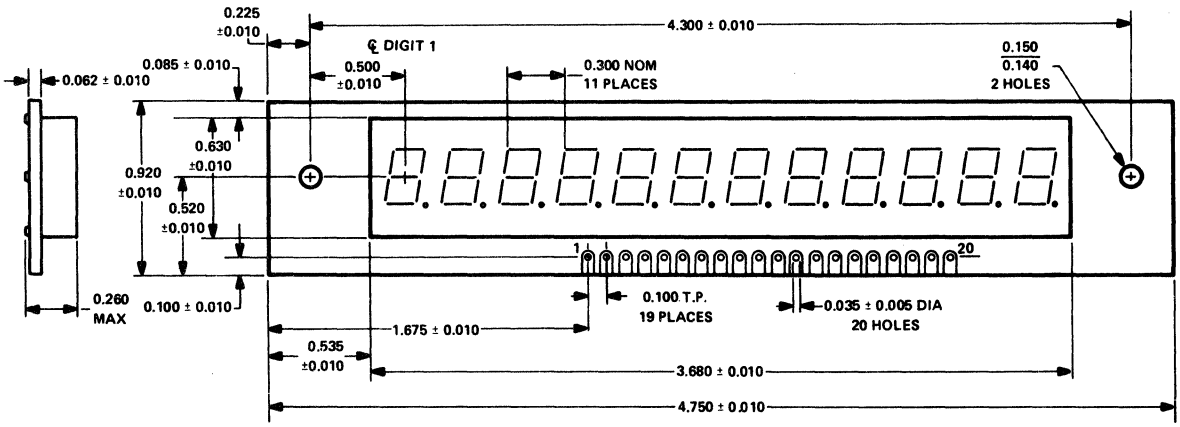

49. OUTLINE DRAWINGS

PY461

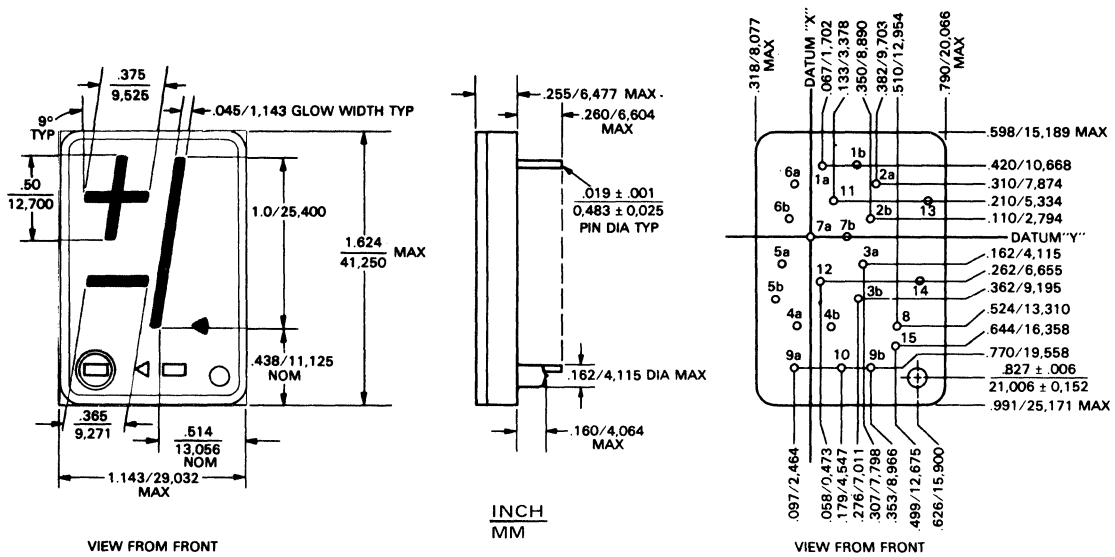

PY462

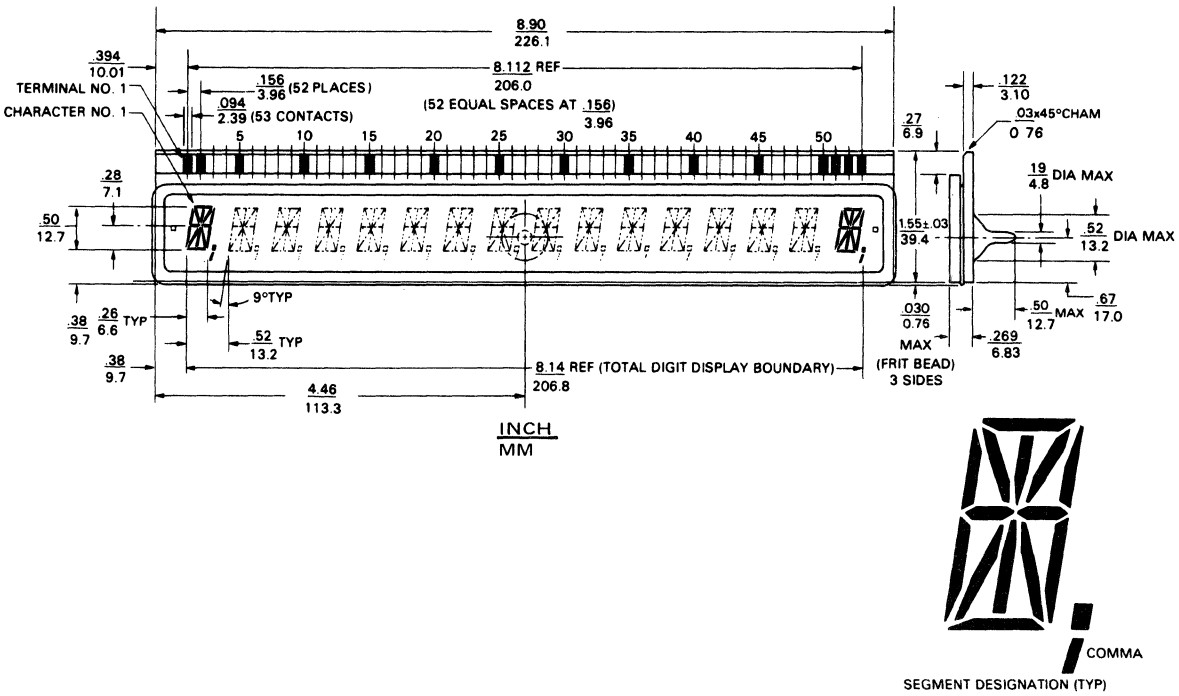

49. OUTLINE DRAWINGS

PY476

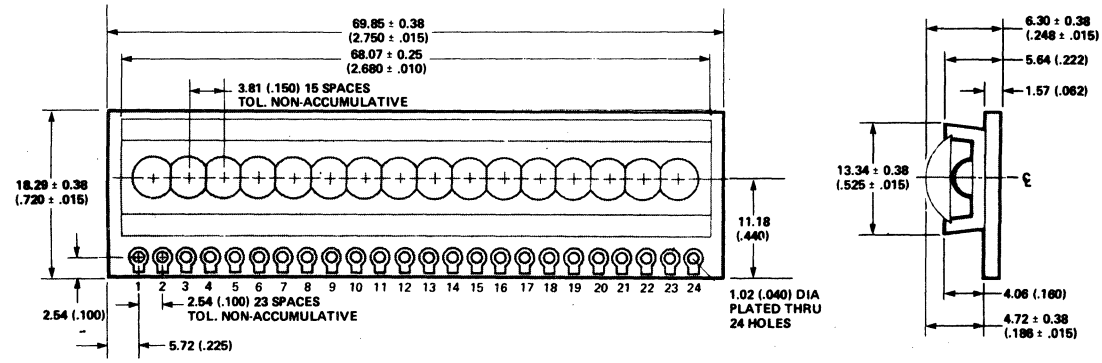

PY480

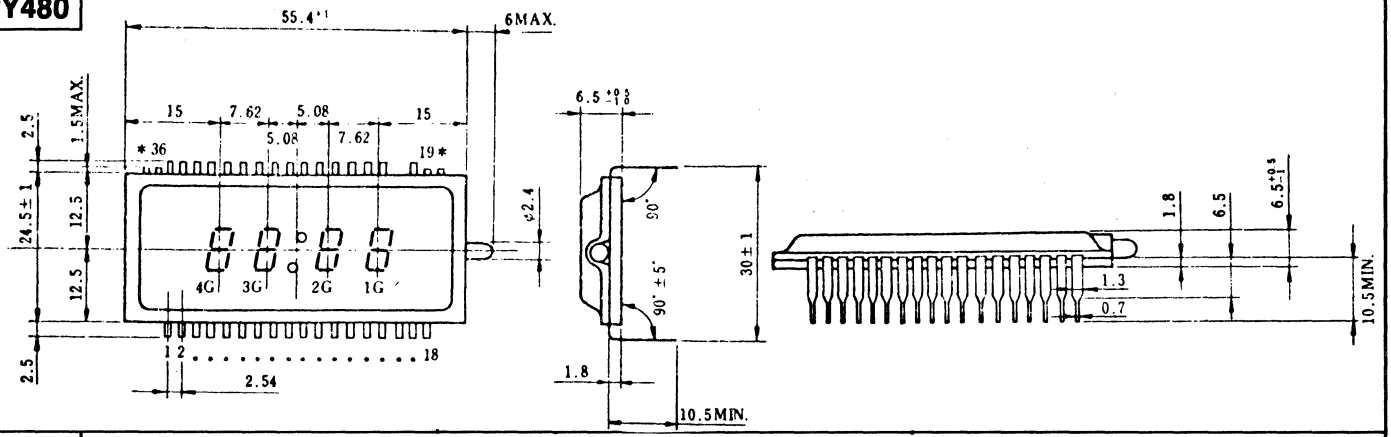

PY482

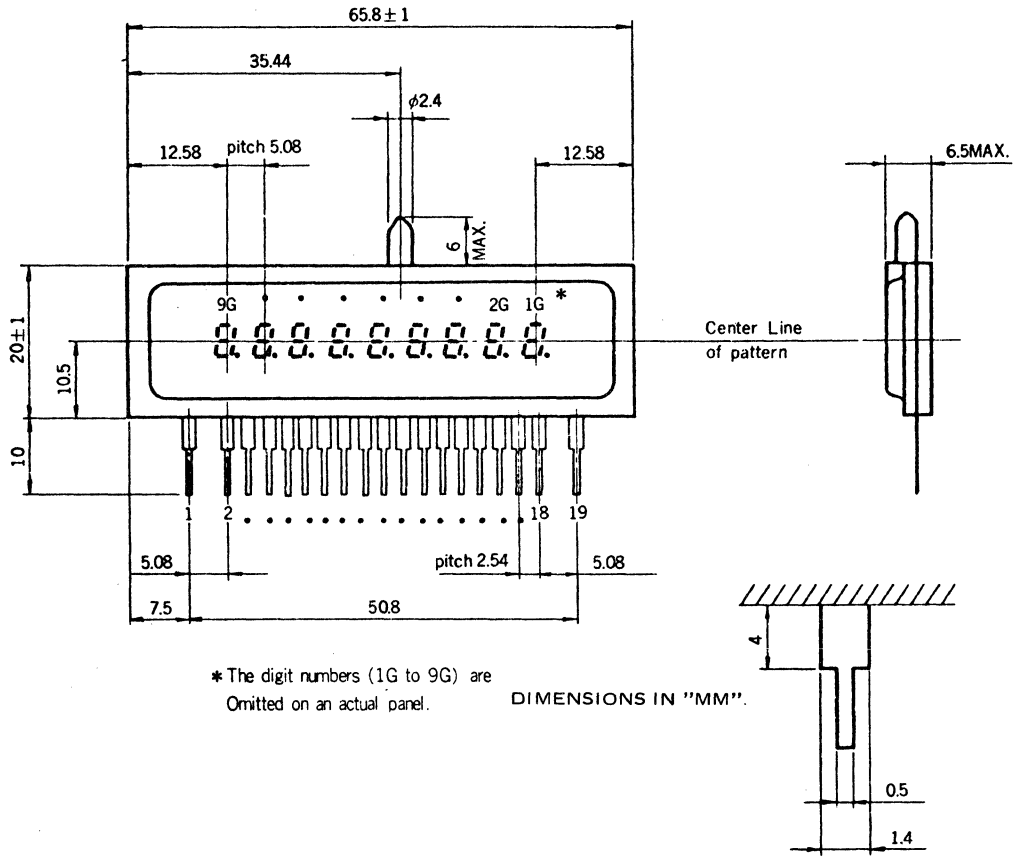

* The digit numbers (1G to 9G) are Omitted on an actual panel.

DIMENSIONS IN "MM".

49. OUTLINE DRAWINGS

PY485

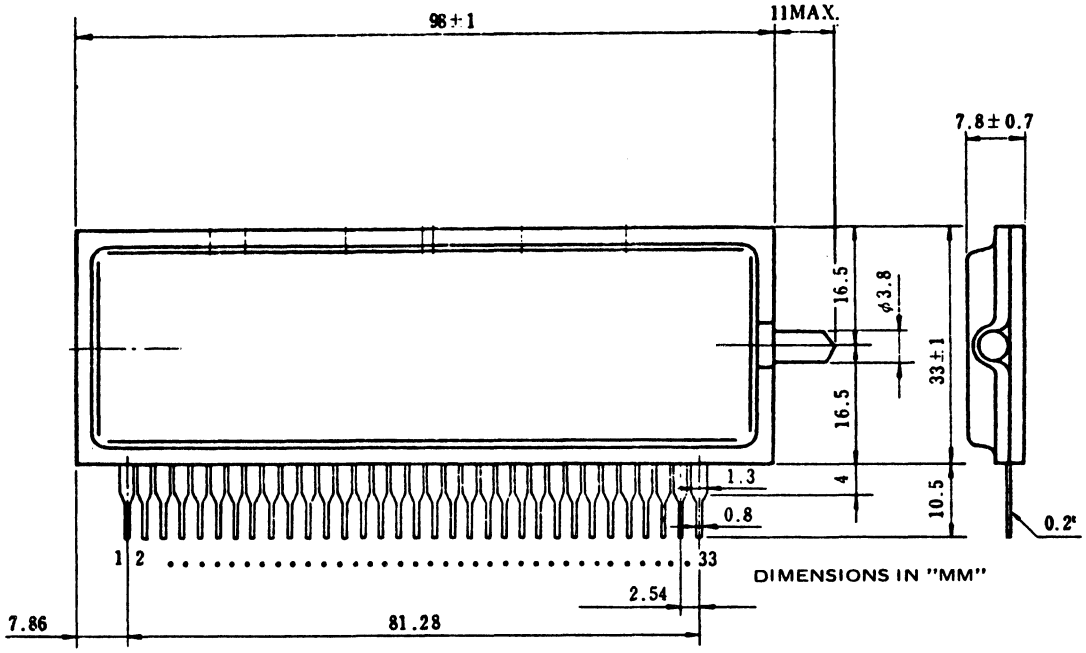

49. OUTLINE DRAWINGS

PY484

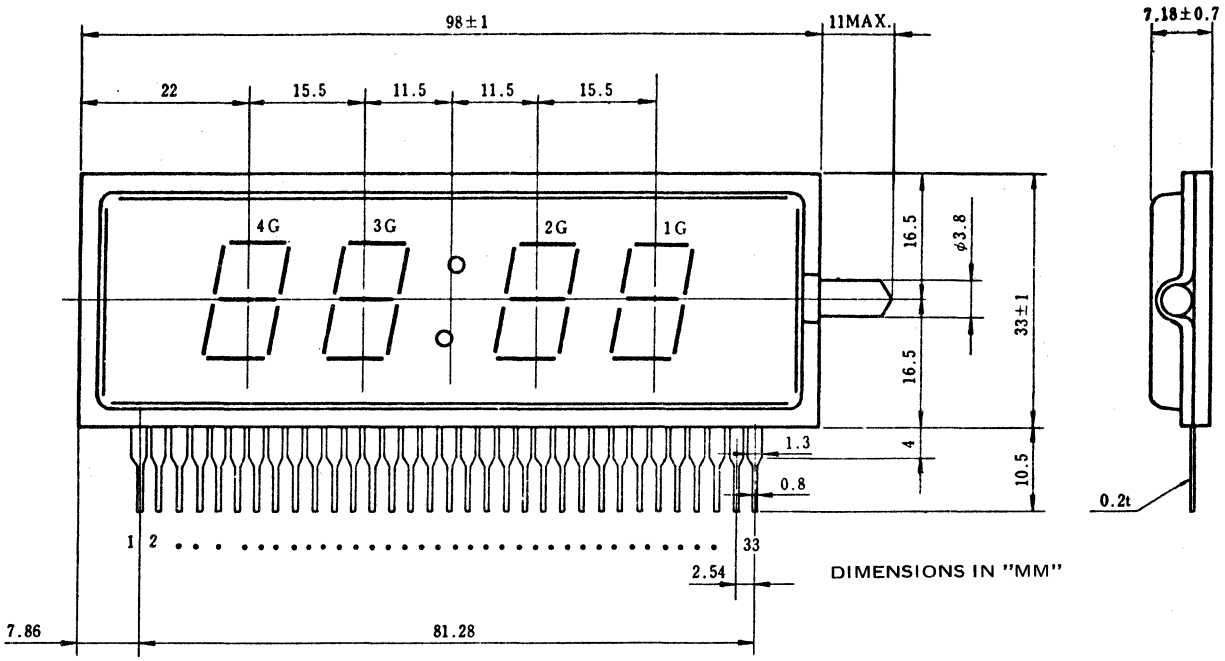

PY486

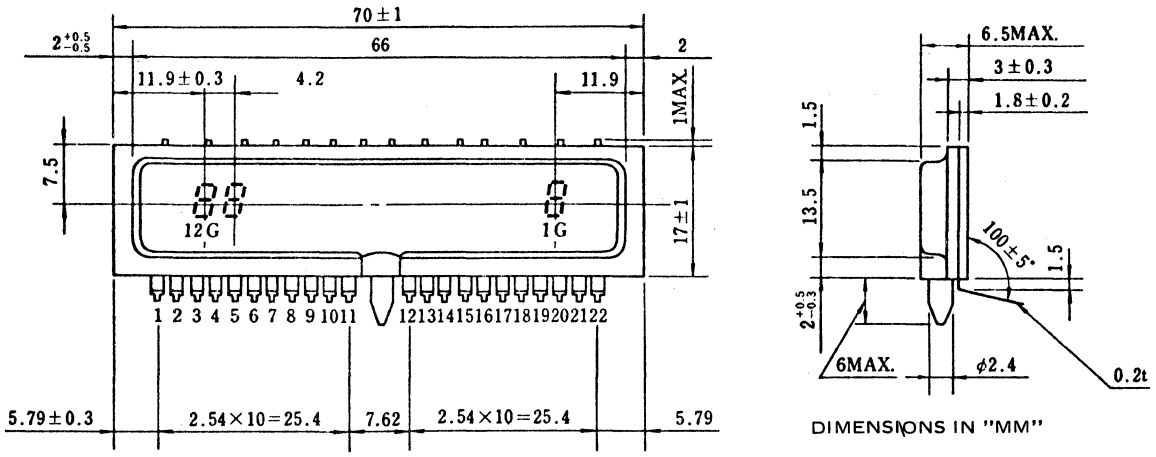

49. OUTLINE DRAWINGS

PY488

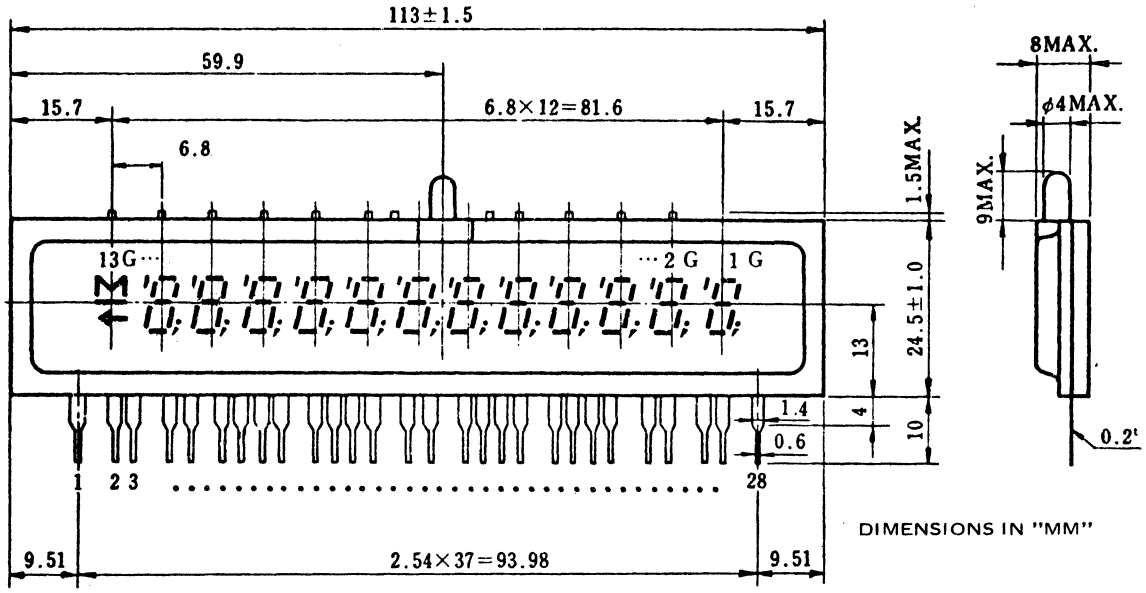

PY492

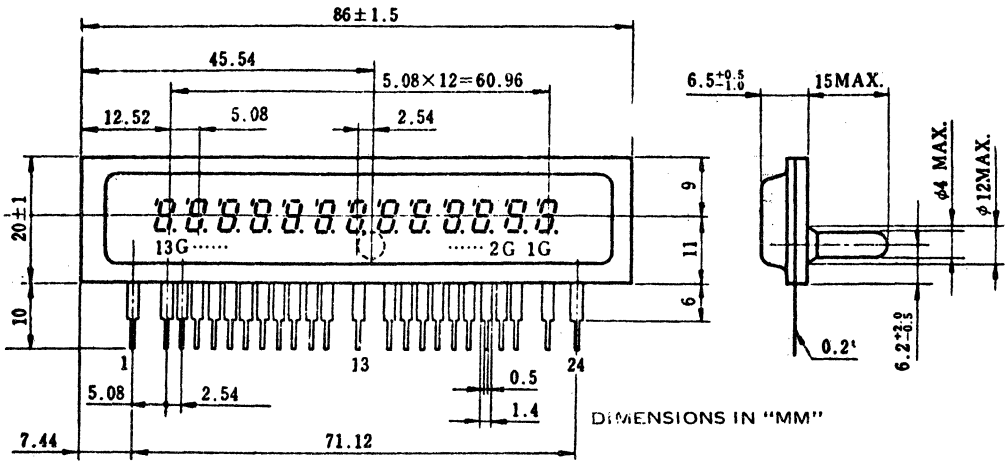

49. OUTLINE DRAWINGS

PY493

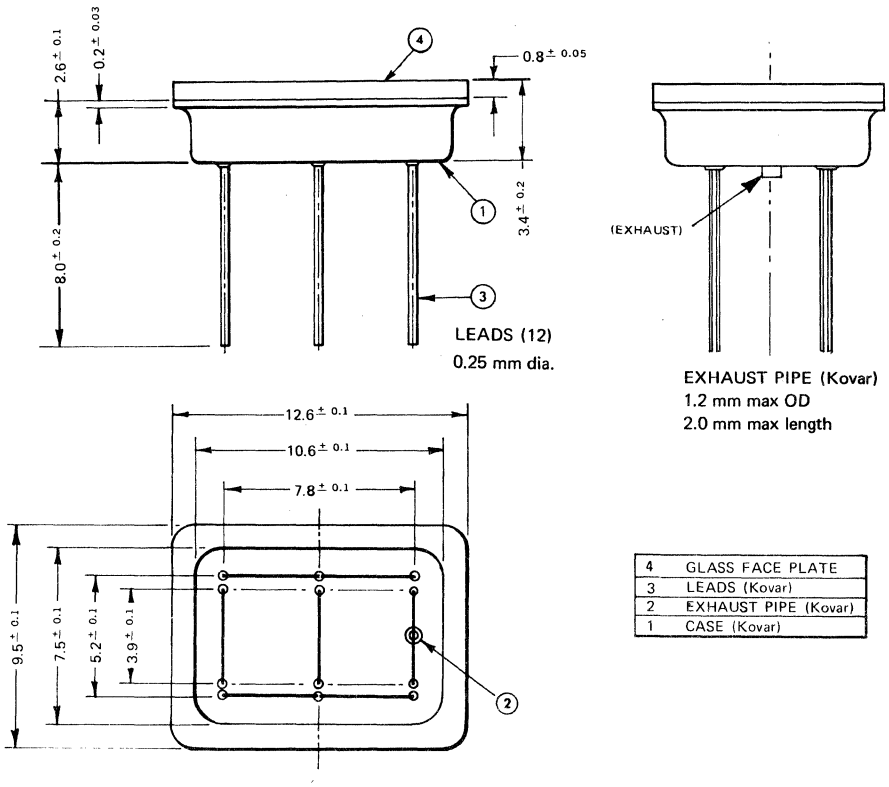

4	GLASS FACE PLATE
3	LEADS (Kovar)
2	EXHAUST PIPE (Kovar)
1	CASE (Kovar)

PY500

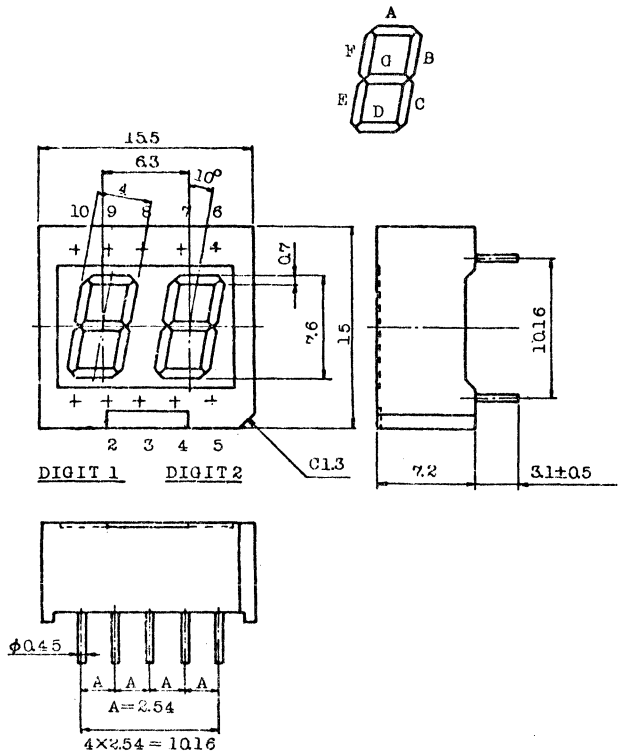

PY501

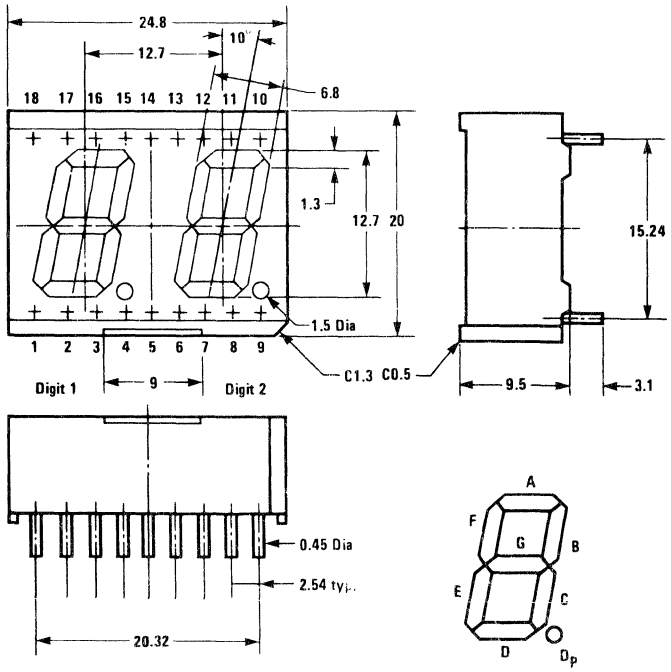

DIMENSIONS IN "MM"

Tolerances are ±0.25 unless otherwise noted.

49. OUTLINE DRAWINGS

PY503

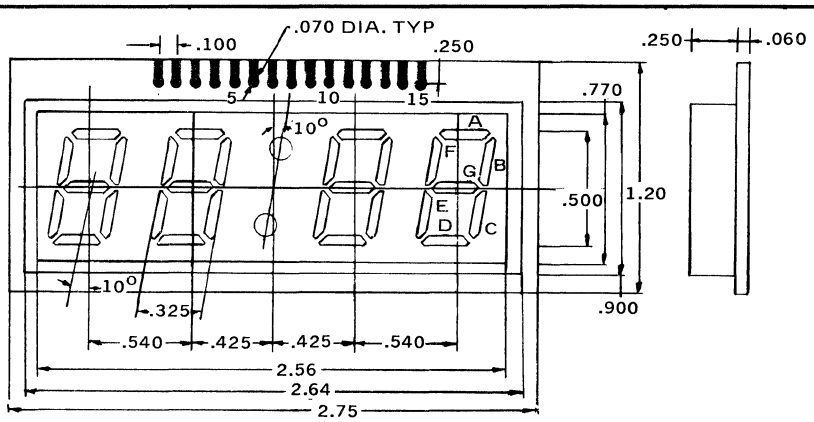

PY505

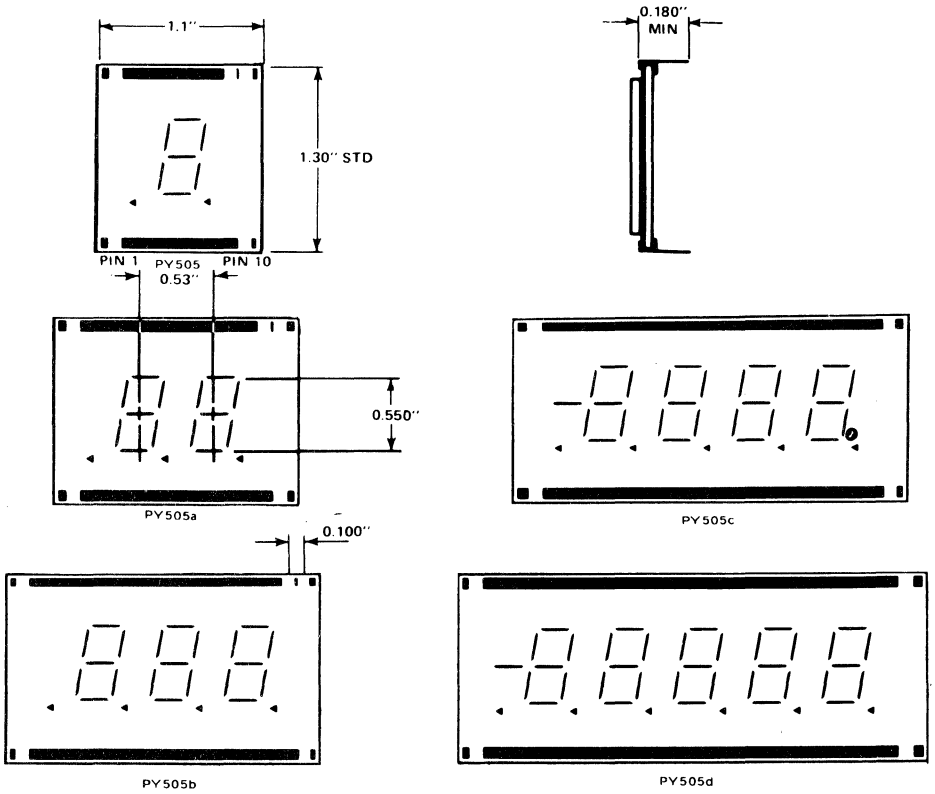

49. OUTLINE DRAWINGS

PY507

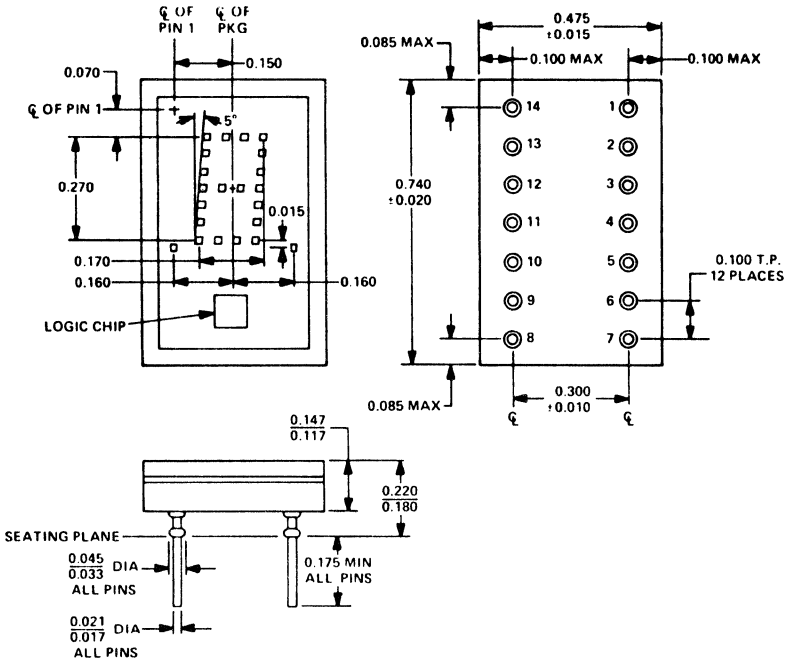

PY513

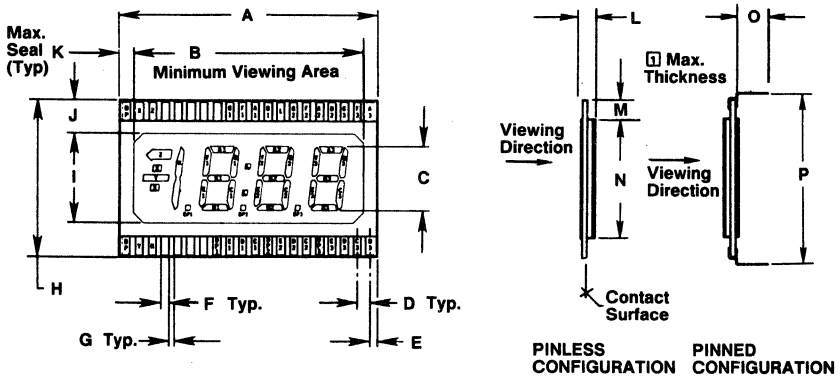

NOTES

1 Maximum thickness includes front and back polarizers plus reflector attached.

	A	B	C	D	E	F	G	H	I	J	K	L	M	N	O	P
PY513	2.00	1.80	.500	.100	.050	.040	.060	1.20	.700	.250	.100	.120	.150	.900	.250	1.30
PY513a	.94	.84	25					.54	.34			.07		.46		
PY513b	2.00	1.80	.35					.90	.50			.102		.70		1.00

49. OUTLINE DRAWINGS

PY514

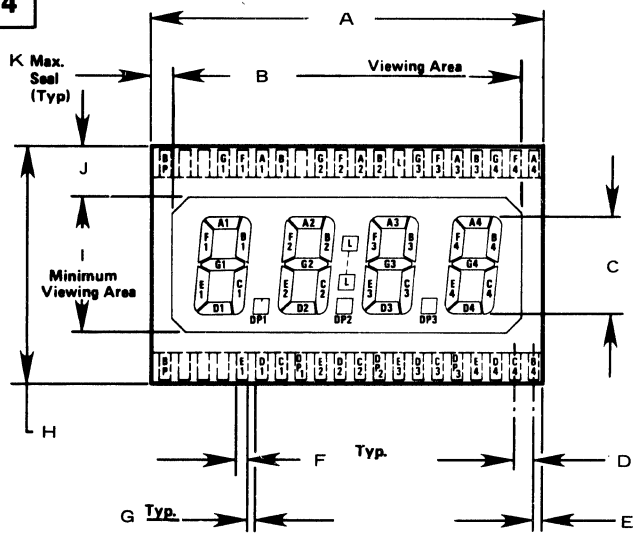

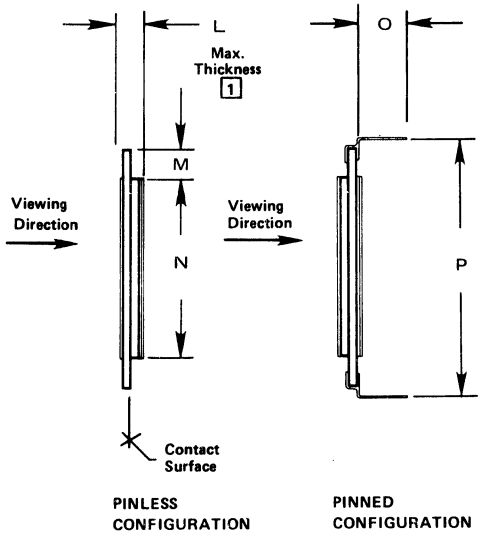

NOTES

1 Maximum thickness includes front and back polarizers plus reflector attached.

FOR PY514b,c,d ONLY

M	#1	Reflective
O	#2	Transmissive
D	#3	Transflective
E	#4	Diffused Reflective
	#5	Diffused Transflective

PIN CONFIG. FOR PY514a ONLY

	A	B	C	D	E	F	G	H	I	J	K	L	M	N	O	P
PY514	2.00	1.80 MIN	.500	.100	.035	.060	.040	1.20	.700	.250	.100	.120	.150	.900	.250	1.30
PY514a	2.75	2.50 MIN	.700	.100	.430	.060	.040	1.50	.950	.275	.125	.120	.150	1.20	.250	1.60
PY514b	2.00	1.80	.500	.100	.049	.060	.040	1.20	.700	.149		.111			.125	1.30
PY514c	2.75	2.55	.700	.100		.060	.040	1.50	1.00	.150		.111			.125	1.30
PY514d	2.25	2.05	.600	.100	.175	.060	.040	1.20	.800	.100		.111			.125	1.30
PY514e	2.00		.350	.100	.050			.900	.700	.100		.102		.700	.250	1.00
PY514f	2.00	1.69		.100	.035	.060	.040	.950	.500	.225	.135	.120	.125	.700	.250	1.047
PY514g	.94	.84	.25					.54	.34			.07		.46		
PY514h	2.00	1.80	.35					.90	.50			.102		.70		1.00
PY514i	2.75	2.48	.70					1.50	.94			.102		1.20		1.60
PY514j	2.00	1.80	.50					1.20	.725			.104				1.30
PY514k	2.75	2.50	.70					1.50	.960			.108				1.60

PY516

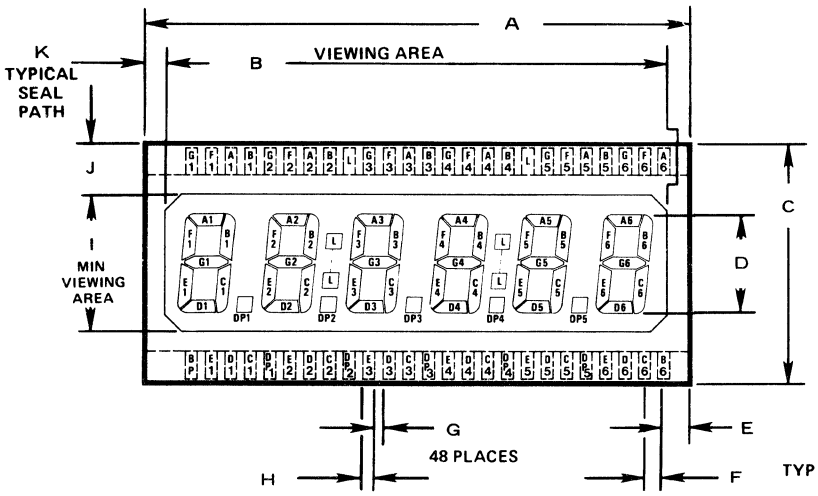

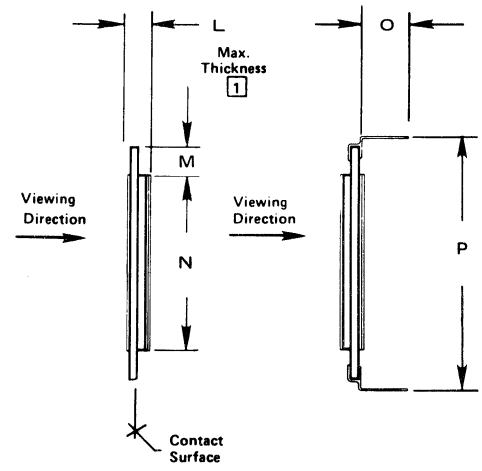

NOTES

1 Maximum thickness includes front and back polarizers plus reflector attached.

	A	B	C	D	E	F	G	H	I	J	K	L	M	N	O	P
PY516	2.75	2.55 MIN	1.20	.500	.125	.100	.040	.060	.700	.250	.100	.120	.150	.900	.250	1.30
PY516a	3.69	3.45	1.50	.700	.650	.100	.040	.060	.950	.275	1.25	.120	.150	1.20	.250	1.60
PY516b	2.50	2.09	.90	.35					.49			.102		.70		1.00
PY516c	2.75	2.45	1.20	.50					.70			.102		.90		1.30
PY516d	3.69	3.46	1.50	.70					.94			.102		1.20		1.60

PIN CONFIG. FOR PY516a ONLY

Pin No.	1	2	3	4	5	6	7	8	9	10	11	12	13	14	15	16	17	18	19	20	21	22	23	24	25
Segment	BP	E1	D1	C1	dp1	E2	D2	C2	dp2	E3	D3	C3	dp3	E4	D4	C4	dp4	E5	D5	C5	dp5	E6	D6	C6	B6

Pin No.	26	27	28	29	30	31	32	33	34	35	36	37	38	39	40	41	42	43	44	45	46	47	48	49	50
Segment	A6	F6	G6	B5	A5	F5	G5	L	B4	A4	F4	G4	B3	A3	F3	G3	L	B2	A2	F2	G2	B1	A1	F1	G1

49. OUTLINE DRAWINGS

PY517

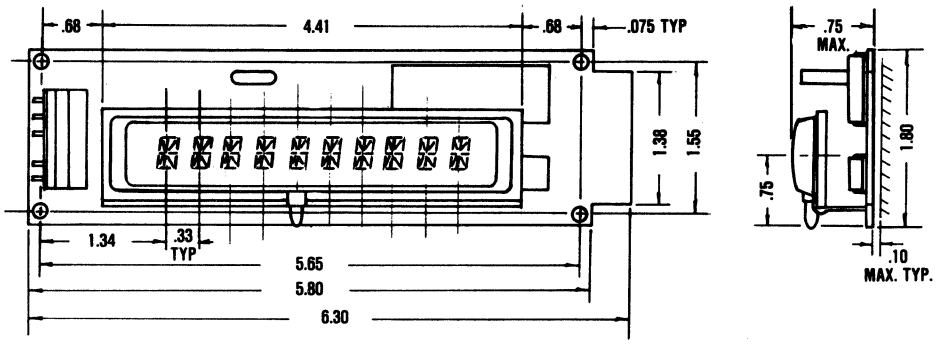

PY518

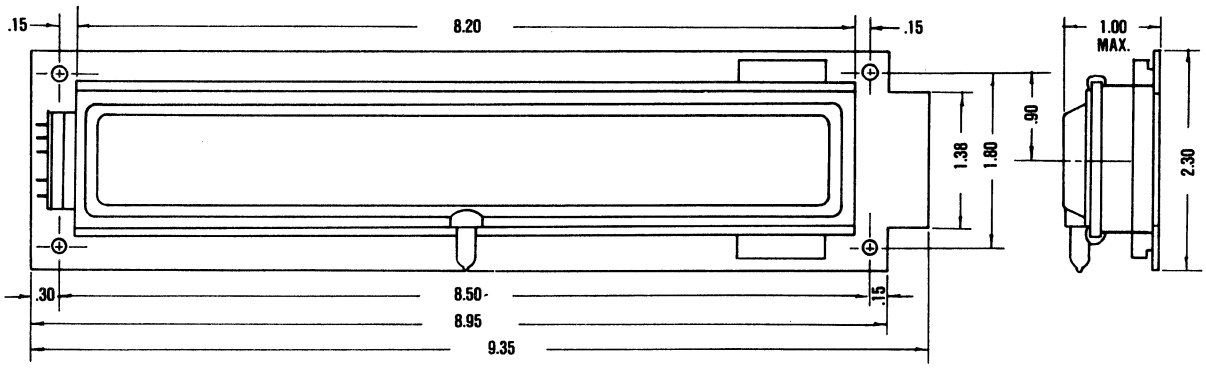

PY520

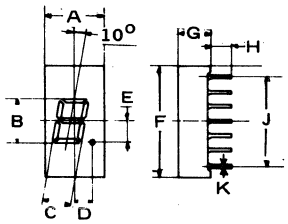

Terminal Assignments

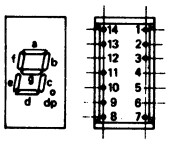

DIMENSIONS IN "MM"

	A	B	C	D	E	F	G	H	J	K	M	N
PY520	10.0	7.60	5.00	3.00	3.60	19.0	5.5	3.50 MIN	15.24	.500	7.60	.250
PY520a	11.0	11.0	7.00	4.30	6.00	19.0	6.5	3.50 MIN	15.24	.500	7.60	.250

49. OUTLINE DRAWINGS

PY521

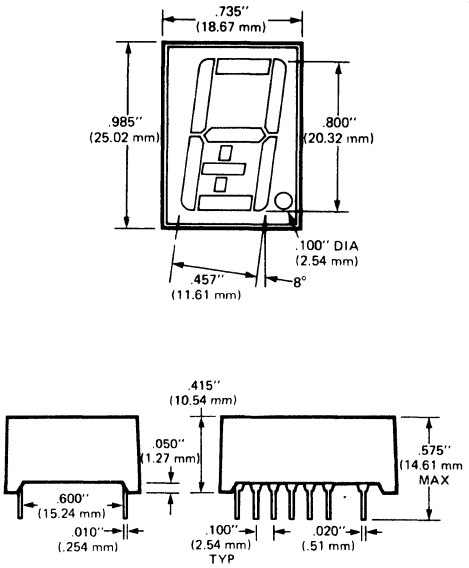

PY522

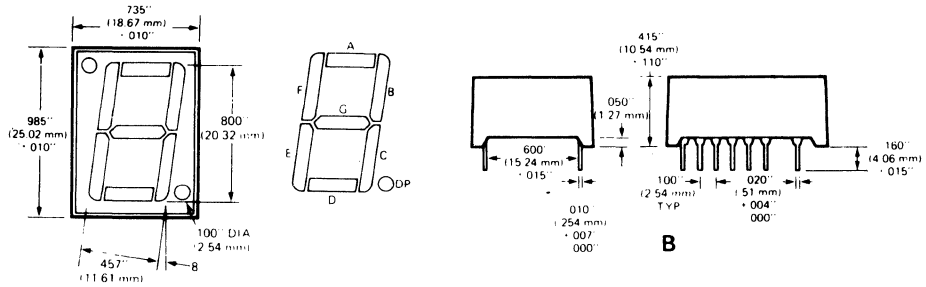

PY522a

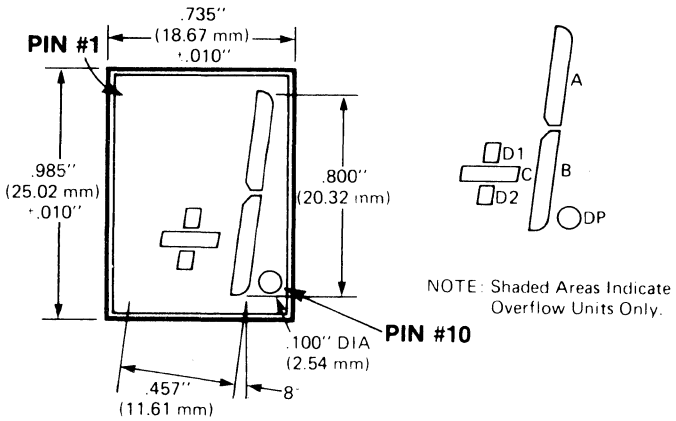

PY524

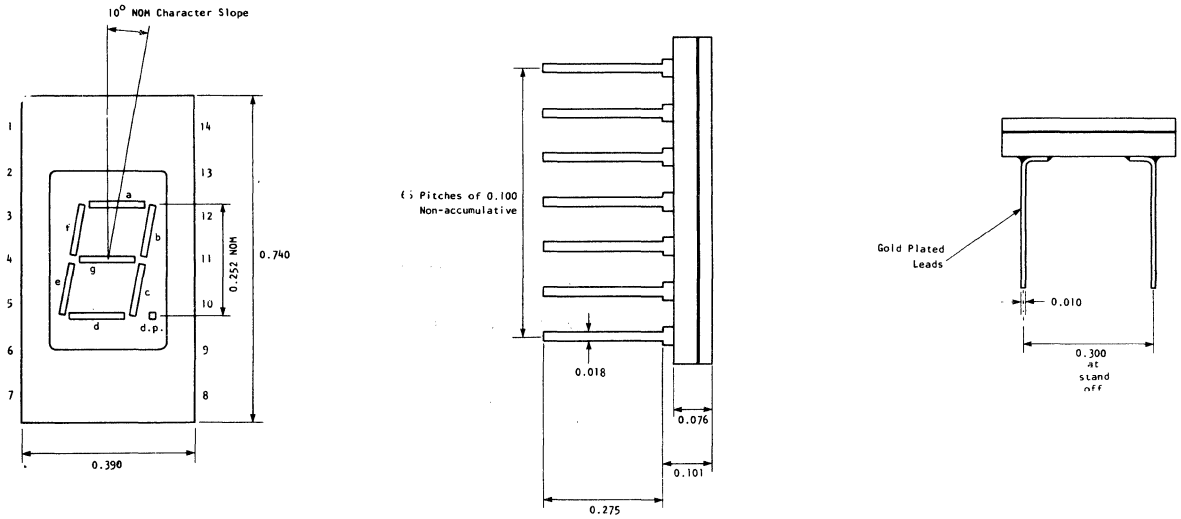

49. OUTLINE DRAWINGS

PY525

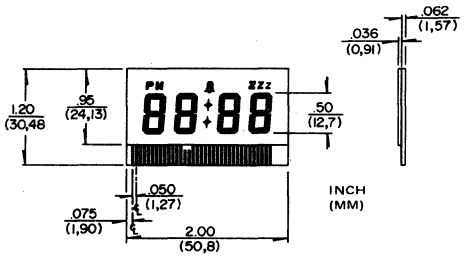

PY534

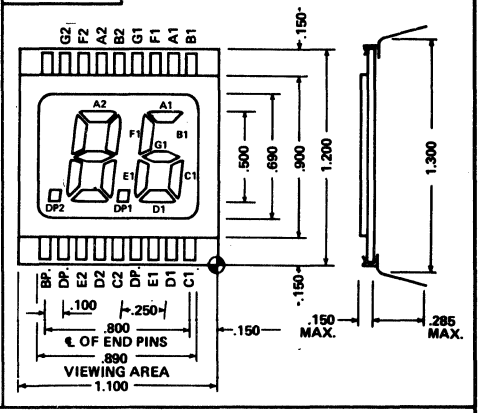

PY535

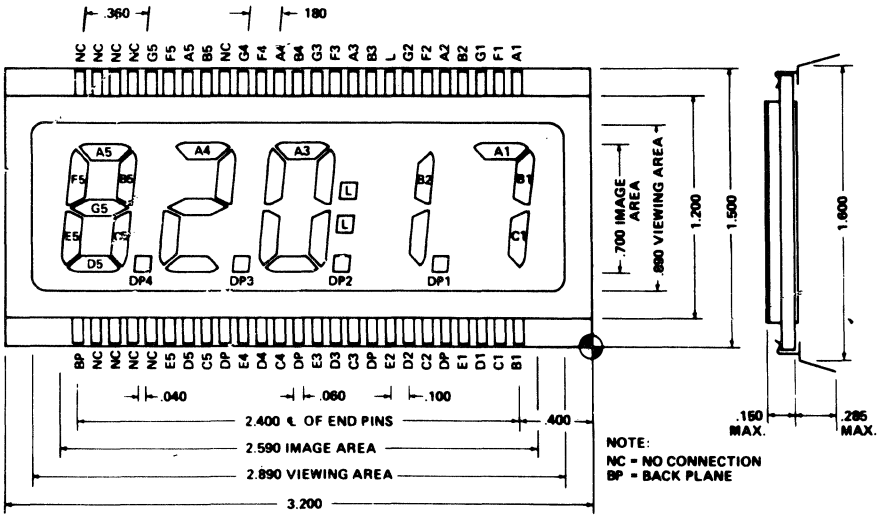

49. OUTLINE DRAWINGS

PY541

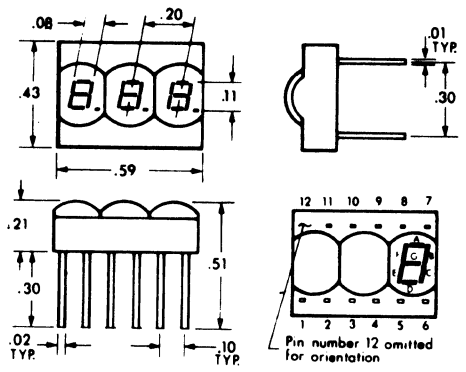

PY542

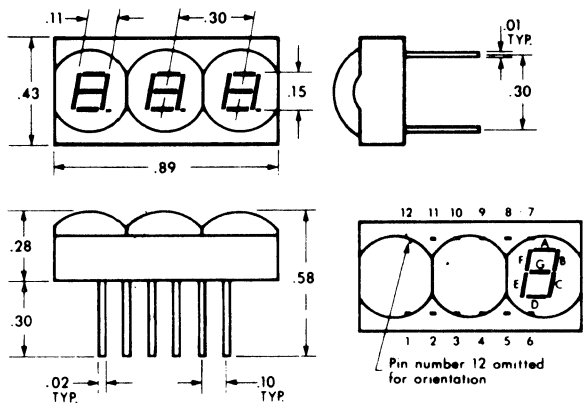

PY543

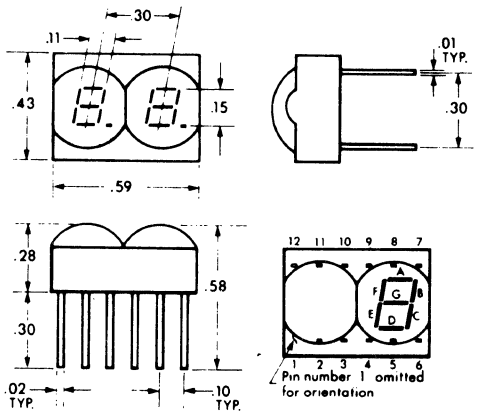

PY544

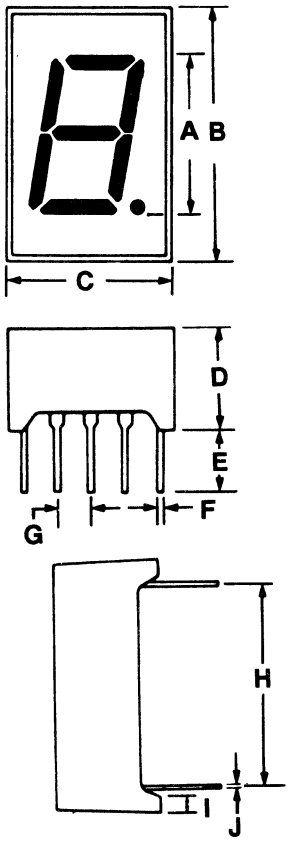

	A	B	C	D	E	F	G	H	I	J	Upper Rt D.P.
PY544	.5	.75	.496	.310	.186	.018 TYP	.100	.600 NOM	.050	.010 TYP	No
PY544a	.560	.750	.480	.315	.155	.020	.100 TYP	.600		.020	No
PY544b	.300	.738	.386	.200	.145	.020	.100	.300		.010	Yes
PY544c	.560	.750	.480	.315	.160	.020	.100 TYP	.600		.010	No

PY549

49. OUTLINE DRAWINGS

PY555

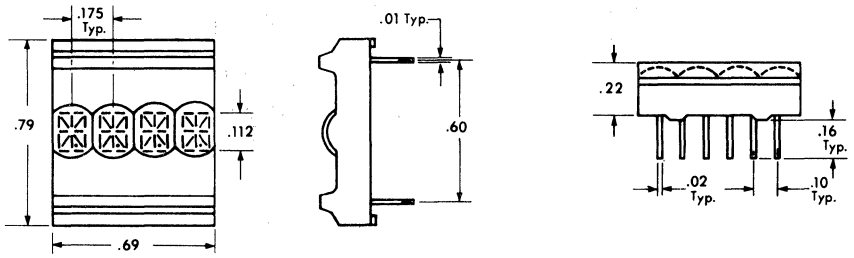

PY556

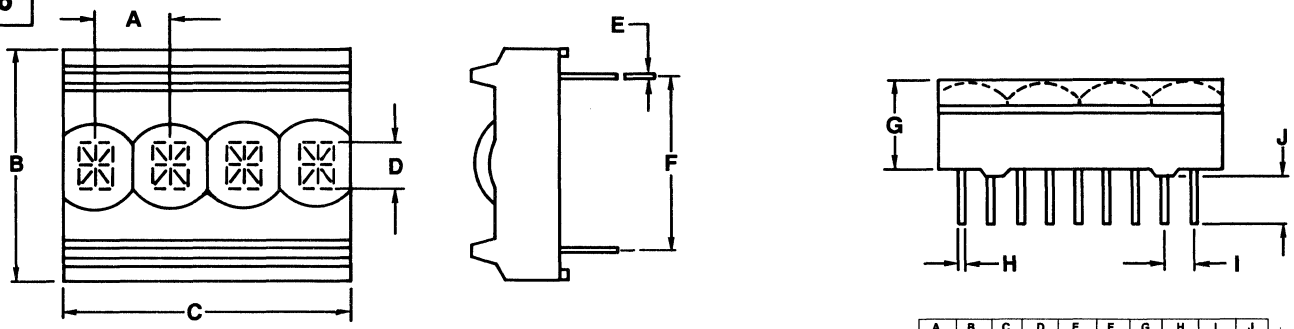

	A	B	C	D	E	F	G	H	I	J
PY556	.25 TYP	.79	.99	.160	.01 TYP	.60	.32	.02 TYP	.10 TYP	.16 TYP
PY556a	.25 TYP	.79	.99	.160	.01 TYP	.60	.26	.02 TYP	.10 TYP	.16 TYP

PY623

NOTES:
(1) All dimensions in inches / millimeters
(2) Material: PC-75 circuit board or approved equivalent
(3) 9 digits on 0.200 / 5.080 centers

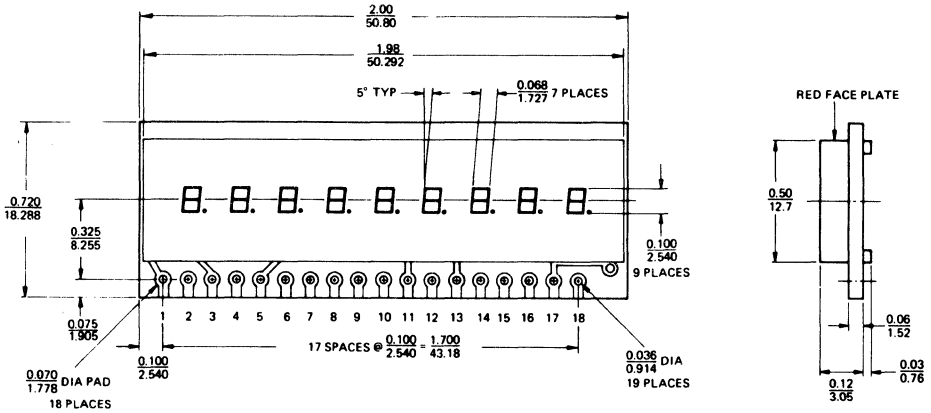

PY558

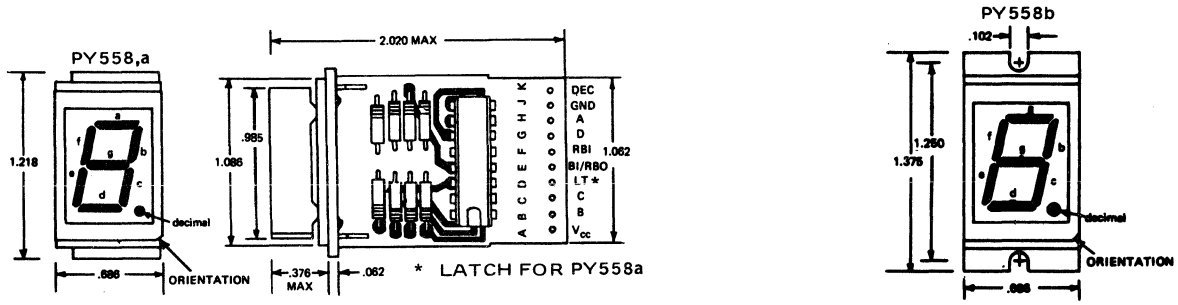

ASSEMBLY AVAILABLE WITH UP TO TEN MODULES (PY558 & PY558a ONLY)

49. OUTLINE DRAWINGS

PY559

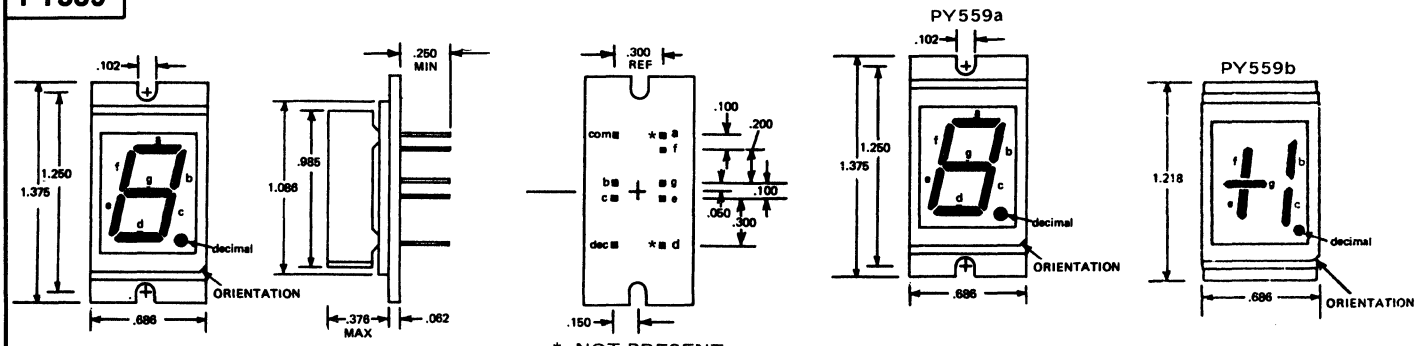

ASSEMBLY AVAILABLE WITH UP TO TEN MODULES (PY559 & PY559b ONLY)

* NOT PRESENT ON PY559b

PY560

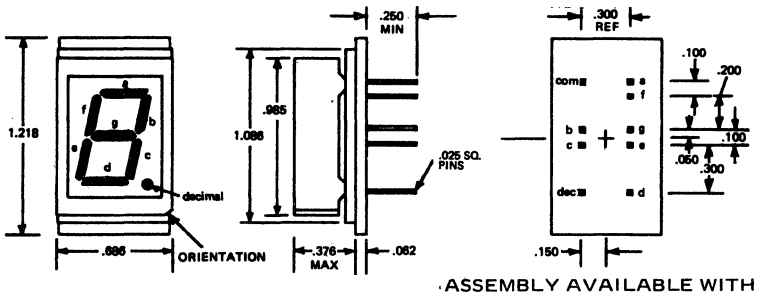

ASSEMBLY AVAILABLE WITH UP TO TEN MODULES

PY562

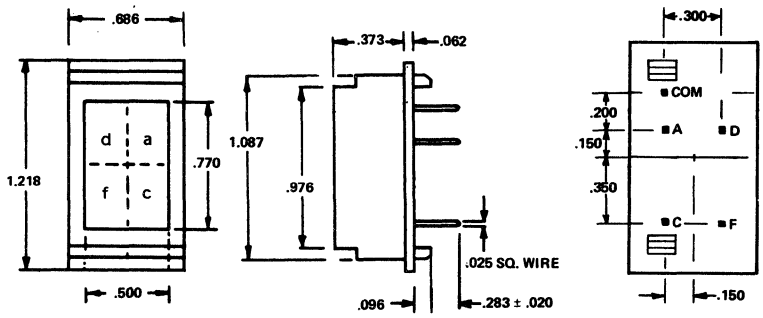

TYPICAL LIGHT CELL LAYOUTS POSSIBLE

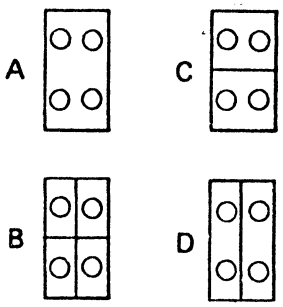

PY563

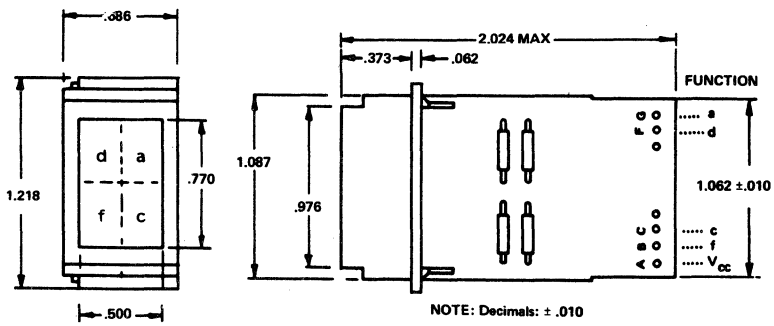

NOTE: Decimals: ± .010

TYPICAL LIGHT CELL LAYOUTS POSSIBLE

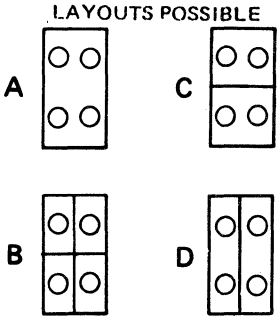

49. OUTLINE DRAWINGS

PY564

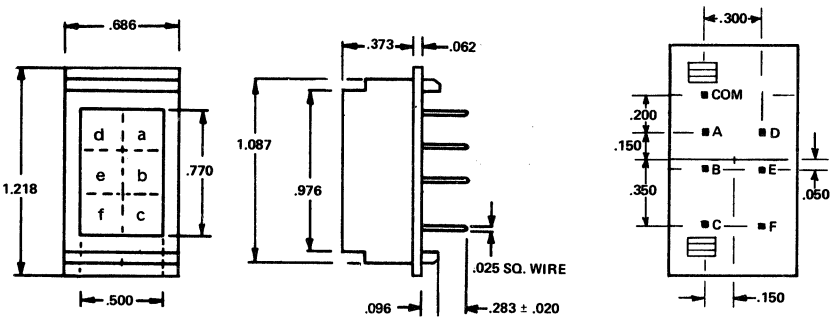

PY565

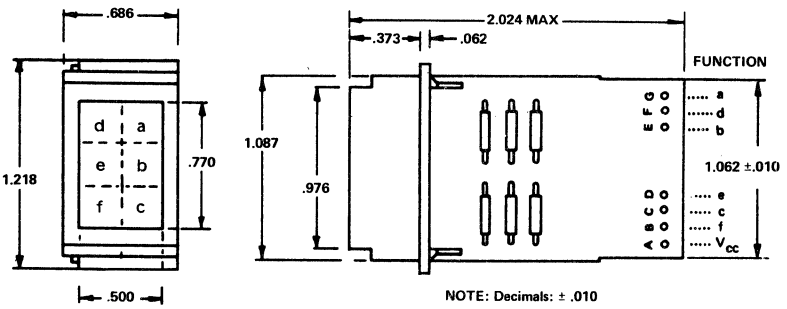

PY566

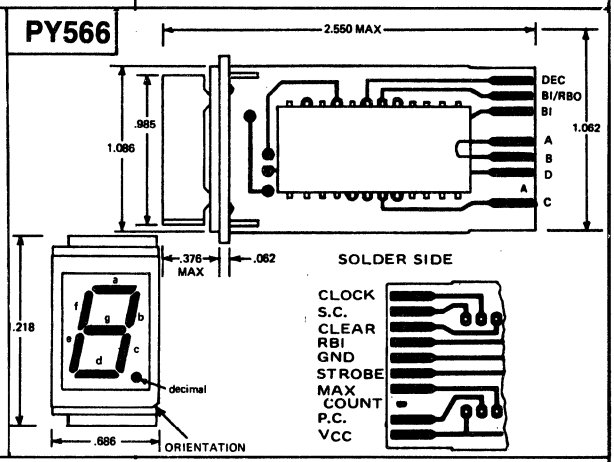

PY569

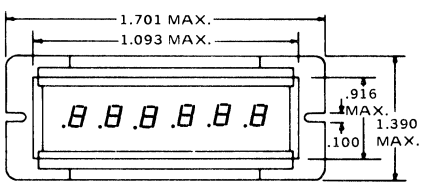

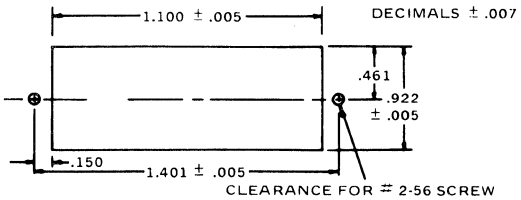

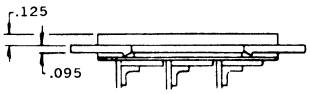

PY569,a,b (ASSEMBLY AVAILABLE WITH UP TO TEN MODULES. DIMENSIONS FOR ONE (1) SHOWN)

PY569,c

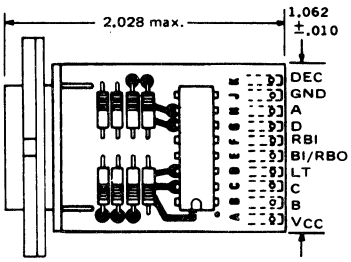

PY569a,d

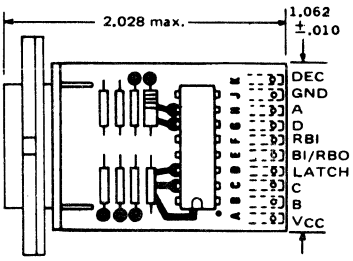

PY569b,e

COMPONENT SIDE

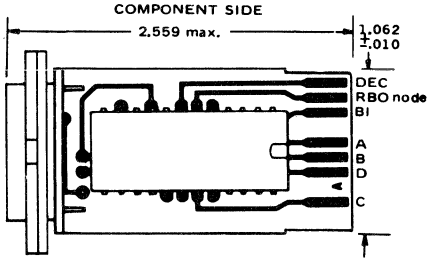

SOLDER SIDE

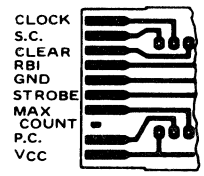

PY569c,d,e : MODULE ONLY

49. OUTLINE DRAWINGS

PY571

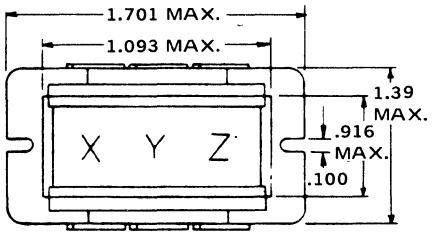

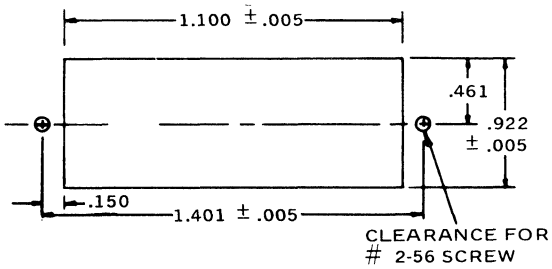

PY571

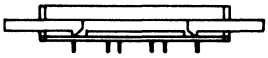

HOLE PATTERN FOR PRINTED CIRCUIT BOARD

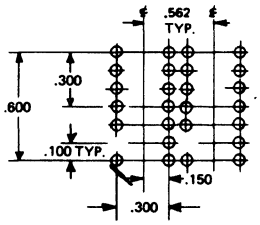

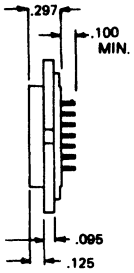

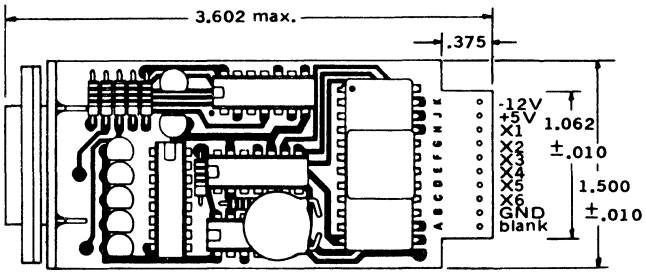

ASSEMBLY AVAILABLE WITH UP TO TEN MODULES DIMENSIONS SHOWN FOR ONE(1)

PY572

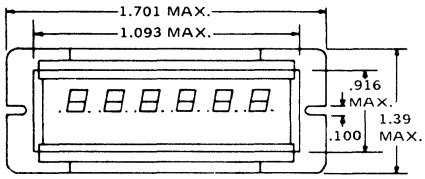

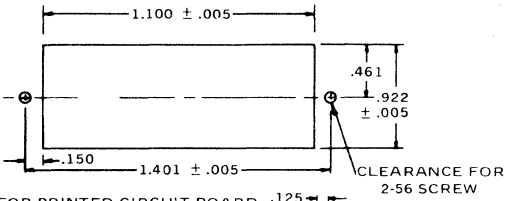

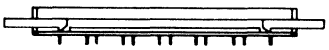

ASSEMBLY AVAILABLE WITH UP TO TEN MODULES. DIMENSIONS FOR ONE (1) SHOWN.

HOLE PATTERN FOR PRINTED CIRCUIT BOARD

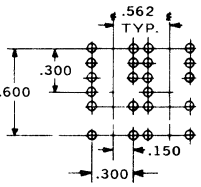

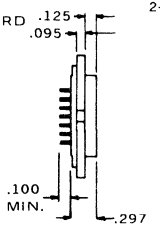

PY601

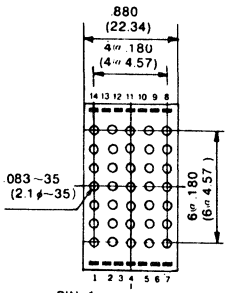

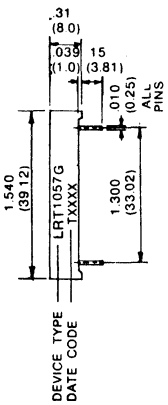

The true-position pin spacing is 0.100 (2.540 MM) between centerlines. Each pin centerline is located within ±0.010 (± .254 mm) of its true longitudinal position relative to pins 4 and 11.

Vertical and horizontal spacing between centerlines of rows and columns is nominally .180 (4.57mm).

All dimensions are in inches and (millimeters). Specifications subject to change without notice.

49. OUTLINE DRAWINGS

PY624

Note 1: Material: superpunch or approved equivalent.
Note 2: All tolerances ±1.015 (0.38).

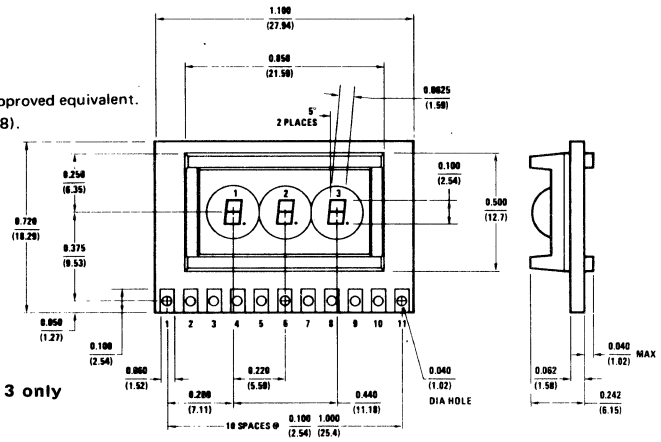

PY624a — Segments 2 and 3 only

PY581

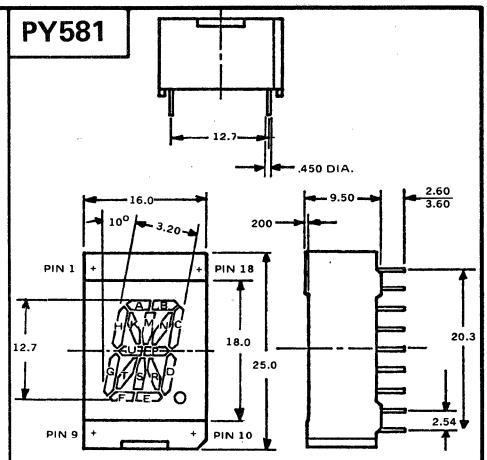

PY582

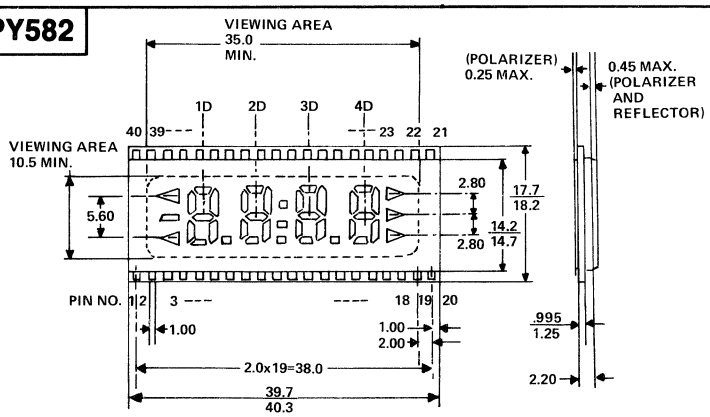

FIG. 1 DETAILED OUTLINE DIMENSIONS

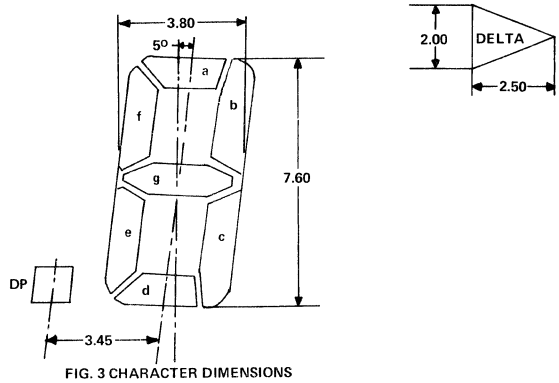

FIG. 3 CHARACTER DIMENSIONS

PY583

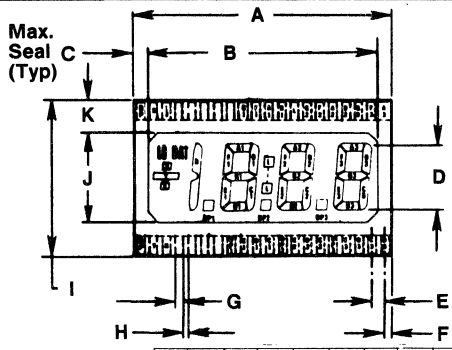

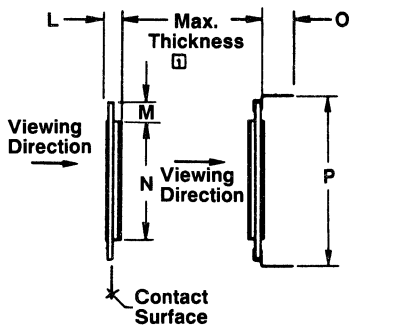

1 NOTES

Maximum thickness includes front and back polarizers plus reflector attached.

	A	B	C	D	E	F	G	H	I	J	K	L	M	N	O	P
PY583	2.00	1.80 MIN	.100	.500	.100 TYP	.050	.04 TYP	.08 TYP	1.20	.700	.250	.120	.150	.900	.250	1.30
PY583a	2.00	1.80		.500					1.20	.724		.104		1.20		
PY583b	2.00	1.80		.500					1.20	.724					.104	1.20

PY584

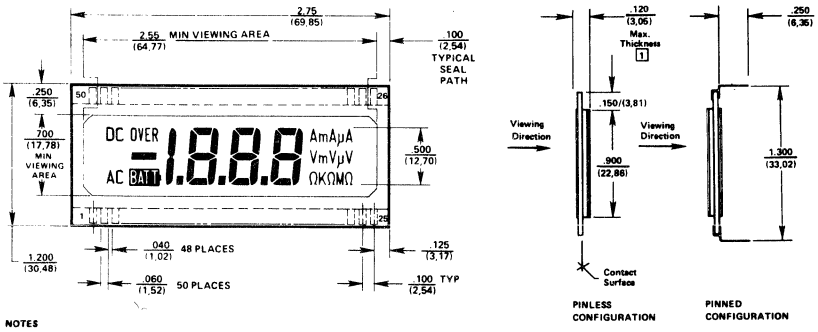

NOTES

1 Maximum thickness includes front and back polarizers plus reflector attached.

2 Dimensions: Inches (mm)

Pin No.	1	2	3	4	5	6	7	8	9	10	11	12	13	14	15	16	17	18	19	20	21	22	23	24	25
Segment	BP	N/C	AC	–	N/C	BAT	h	dp1	E1	D1	C1	dp2	E2	D2	C2	dp3	E3	D3	C3	NC	V	mV	Ω	KΩ	MΩ

Pin No.	26	27	28	29	30	31	32	33	34	35	36	37	38	39	40	41	42	43	44	45	46	47	48	49	50
Segment	μV	μA	mA	A	B3	N/C	A3	F3	G3	B2	A2	F2	G2	B1	A1	F1	G1	N/C	N/C	N/C	OV	DC	N/C	N/C	BP

49. OUTLINE DRAWINGS

PY585

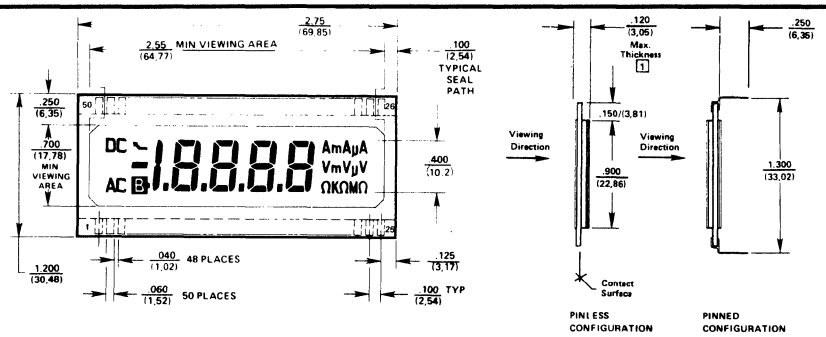

NOTES

1 Maximum thickness includes front and back polarizers plus reflector attached.

2 Dimensions: Inches (mm)

Pin No.	1	2	3	4	5	6	7	8	9	10	11	12	13	14	15	16	17	18	19	20	21	22	23	24	25
Segment	BP	N/C	AC	Minus	BAT	h	dp1	E1	D1	C1	dp2	E2	D2	C2	dp3	E3	D3	C3	dp4	E4	D4	C4	Ω	KΩ	MΩ

Pin No.	26	27	28	29	30	31	32	33	34	35	36	37	38	39	40	41	42	43	44	45	46	47	48	49	50
Segment	μV	mV	μA	mA	A	V	B4	A4	F4	G4	B3	A3	F3	G3	B2	A2	F2	G2	B1	A1	F1	G1	Arrow	DC	BP

PY586

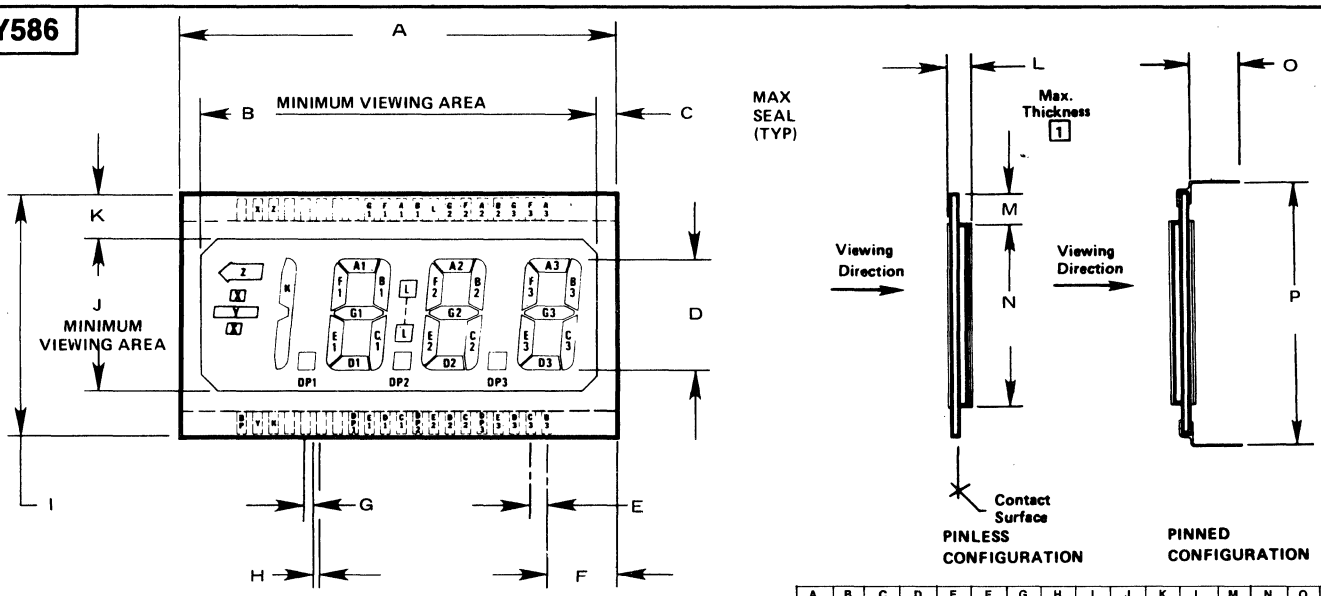

NOTES

1 Maximum thickness includes front and back polarizers plus reflector attached.

	A	B	C	D	E	F	G	H	I	J	K	L	M	N	O	P
PY586	2.75	2.50 MIN	.125	.700	.100	.430	.060	.040	1.50	.950	.275	.120	.150	1.20	.250	1.60
PY586a	3.69	3.45 MIN	.125	1.00	.100	.900	.060	.040	1.80	1.25	.275	.120	.150	1.50	.250	1.90
PY586b	2.00	1.80		.500					1.20	.724		.104				1.30
PY586c	2.75	2.50		.700					1.50	.960		.108				1.60

FOR PY586a ONLY

Pin No.	1	2	3	4	5	6	7	8	9	10	11	12	13	14	15	16	17	18	19	20
Segment	BP	N/C	N/C	N/C	E1	D1	C1	dp1	E2	D2	C2	dp2	E3	D3	C3	dp3	E4	D4	C4	B4

Pin No.	21	22	23	24	25	26	27	28	29	30	31	32	33	34	35	36	37	38	39	40
Segment	A4	F4	G4	B3	A3	F3	G3	L	B2	A2	F2	G2	N/C	B1	A1	F1	G1	N/C	N/C	N/C

PY587

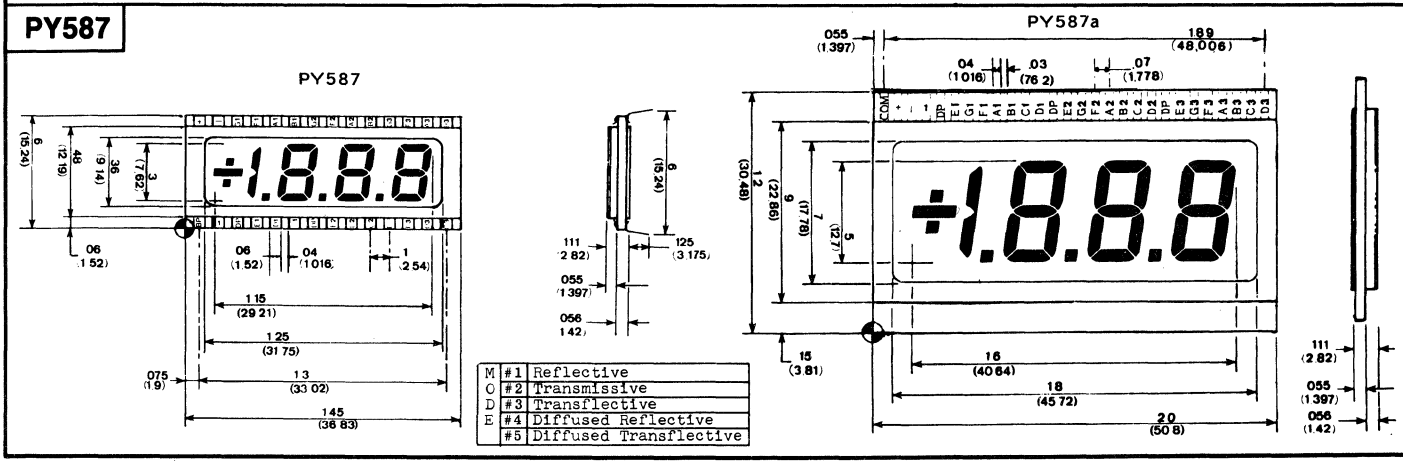

M	#1	Reflective
O	#2	Transmissive
D	#3	Transflective
E	#4	Diffused Reflective
	#5	Diffused Transflective

49. OUTLINE DRAWINGS

PY588

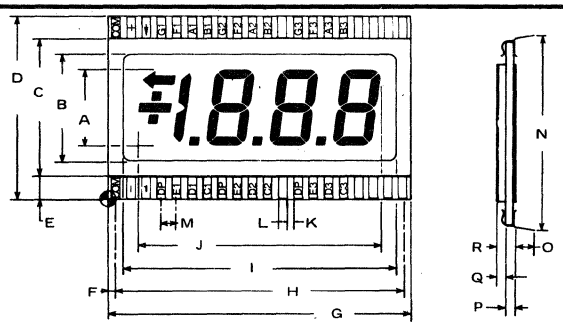

M	#1	Reflective
O	#2	Transmissive
D	#3	Transflective
E	#4	Diffused Reflective
	#5	Diffused Transflective

EXCEPT PY588d

	A	B	C	D	E	F	G	H	I	J	K	L	M	N	O	P	Q	R
PY588	.500	.700	.900	1.20	.150	.050	2.00	1.90	1.80	1.60	.040	.060	.100	1.30	.125	.056	.055	.111
PY588a	.600	.800	1.00	1.20	.100	.174	2.25	2.05	1.90	1.85	.040	.060	.100	1.30	.125	.056	.055	.111
PY588b	.750	1.00	1.20	1.50	.150	.550	3.00	2.80	2.55	1.90	.040	.060	.100	1.30	.125	.056	.055	.111
PY588c	1.00	1.30	1.50	1.80	.150	1.05	4.00	3.80	3.50	1.90	.040	.060	.100	1.90	.125	.056	.055	.111
PY588d	.700	1.00	1.20	1.50	.150	.100	2.75	2.55	2.35	1.90	.040	.060	.100	1.60	.125	.056		.111

PY589

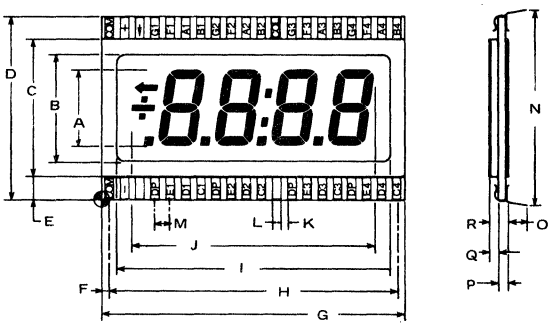

M	#1	Reflective
O	#2	Transmissive
D	#3	Transflective
E	#4	Diffused Reflective
	#5	Diffused Transflective

	A	B	C	D	E	F	G	H	I	J	K	L	M	N	O	P	Q	R
PY589	.500	.700	.900	1.20	.150	.050	2.00	1.90	1.80	1.60	.040	.060	.100	1.30	.125	.056	.055	.111
PY589a	1.00	1.30	1.50	1.80	.150	1.05	4.00	3.80	3.50	1.90	.040	.060	.100	1.90	.125	.056	.055	.111
PY589b	.600	.800	1.00	1.20	.100	.100	2.25		2.05	1.90	.040	.060	.100	1.30	.125		.055	.111
PY589c	.750	1.00	1.20	1.50	.150	.550	3.00	2.80	2.55	1.90	.040	.060	.100	1.60	.125	.056	.055	.111
PY589d	.300	.360	.480	.600	.060	.050	2.00	1.90	1.80	1.40	.040	.060	.100	.600	.125	.056	.055	.111

PY590

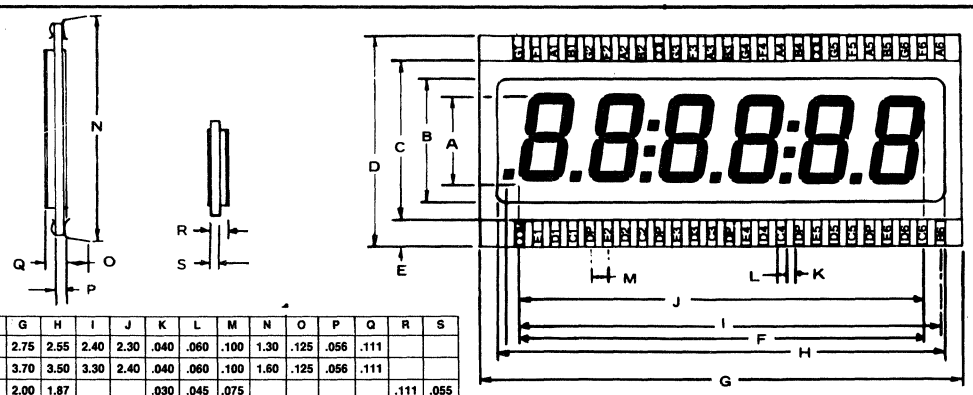

	A	B	C	D	E	F	G	H	I	J	K	L	M	N	O	P	Q	R	S
PY590	.500	.700	.900	1.20	.150		2.75	2.55	2.40	2.30	.040	.060	.100	1.30	.125	.056	.111		
PY590a	.700	1.00	1.20	1.50	.150		3.70	3.50	3.30	2.40	.040	.060	.100	1.60	.125	.056	.111		
PY590b	.300	.360	.480	.600	.150	1.67	2.00	1.87			.030	.045	.075					.111	.055
PY590c	.500	.650		1.20			2.75	2.50						1.30		.043	.108		
PY590d	.700	.960		1.50			3.69	3.44						1.60		.043	.108		

PY591

Note Dimensions are in inches and (millimeters)

PY591

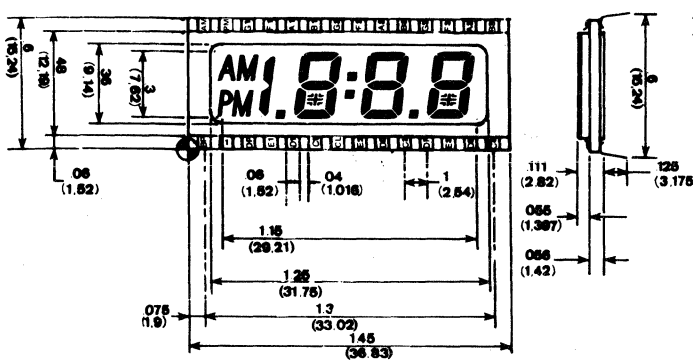

PY591a

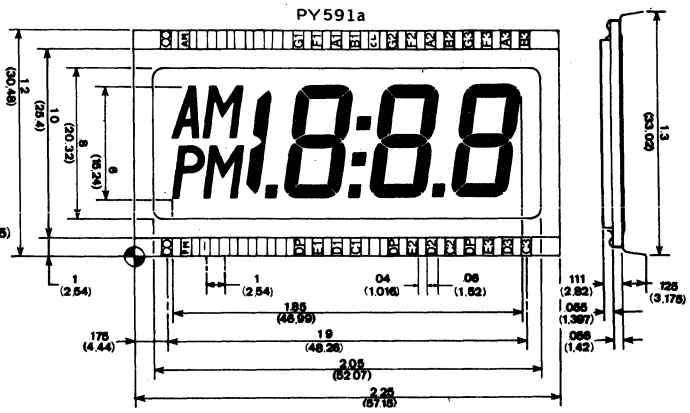

49. OUTLINE DRAWINGS

PY592

M	#1	Reflective
O	#2	Transmissive
D	#3	Transflective
E	#4	Diffused Reflective
	#5	Diffused Transflective

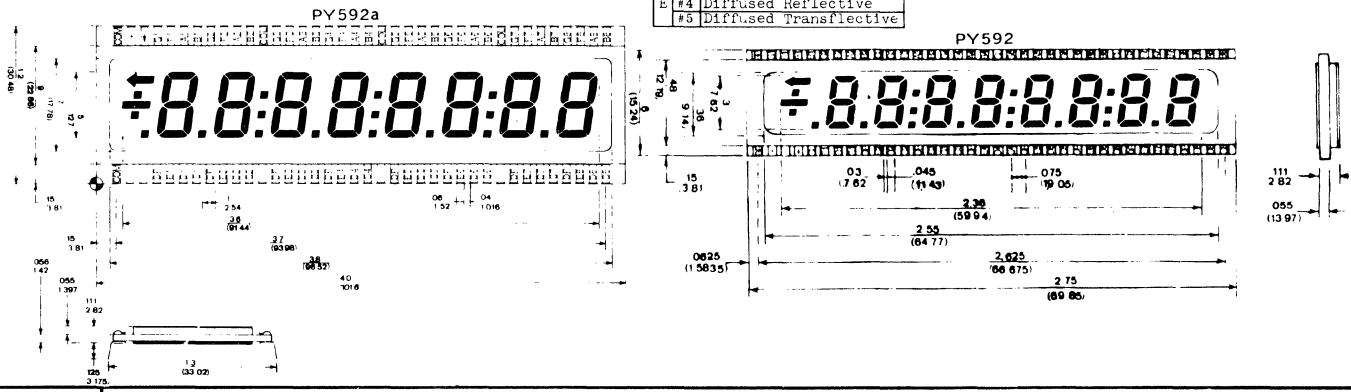

PY593

M	#1	Reflective
O	#2	Transmissive
D	#3	Transflective
E	#4	Diffused Reflective
	#5	Diffused Transflective

	A	B	C	D	E	F	G	H	I	J	K	L	M	N	O	P	R	S
PY593	.400	.040	.060	.100	1.30	1.50	1.70	.100	.150	2.70	2.40	2.20	2.00	.650	2.80	.125	.055	.111
PY593a	.400	.040	.060	.100	1.80	1.90	2.10	.100	.150	3.70	3.40	3.20	3.00	.850	3.80	.125	.055	.111

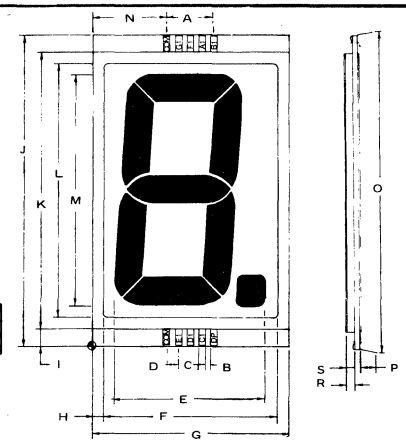

PY594

M	#1	Reflective
O	#2	Transmissive
D	#3	Transflective
E	#4	Diffused Reflective
	#5	Diffused Transflective

	A	B	C	D	E	F	G	H	I	J	K	L	M	N	O	P	R
PY594	2.70	2.40	2.20	2.00	.150	.100	1.70	1.50	1.20	.800	.100	.060	.040	2.80	.125	.055	.111
PY594a	3.70	3.40	3.20	3.00	.150	.100	2.10	1.90	1.80	.800	.100	.060	.040	3.80	.125	.055	.111

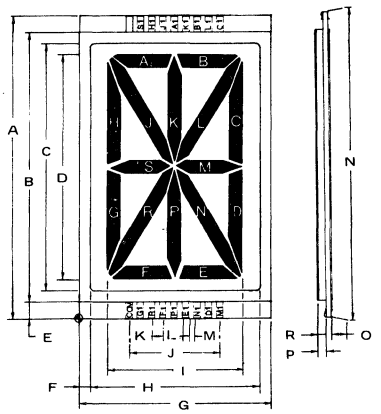

PY595

Note Dimensions are in inches and (millimeters)

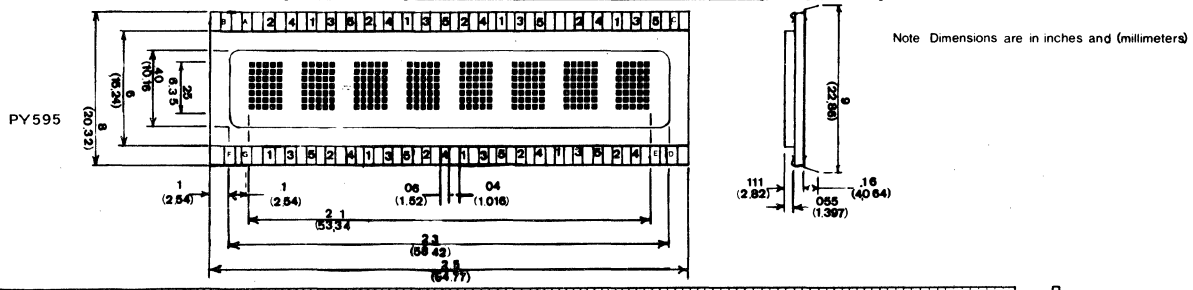

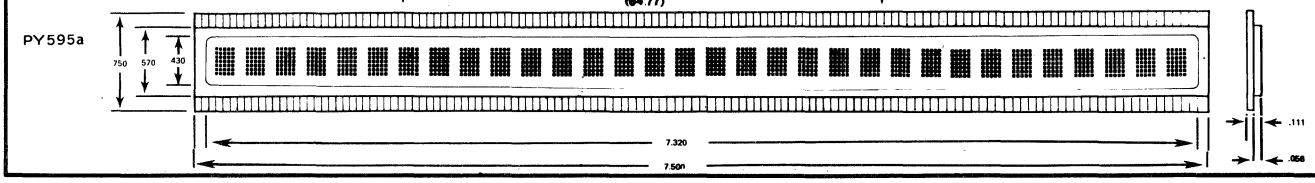

49. OUTLINE DRAWINGS

PY610

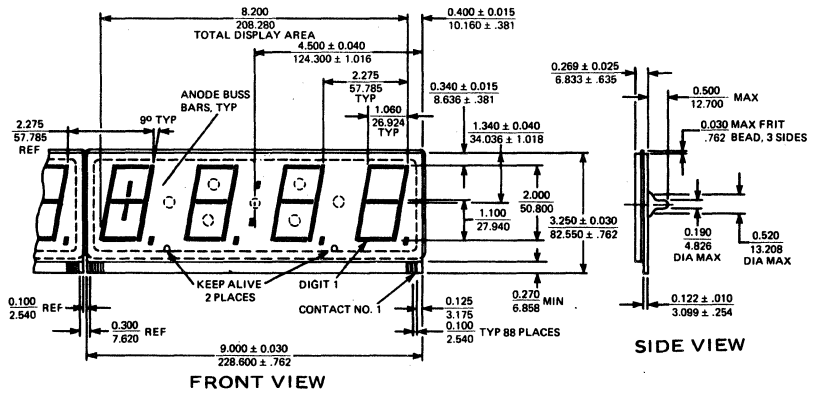

PY612

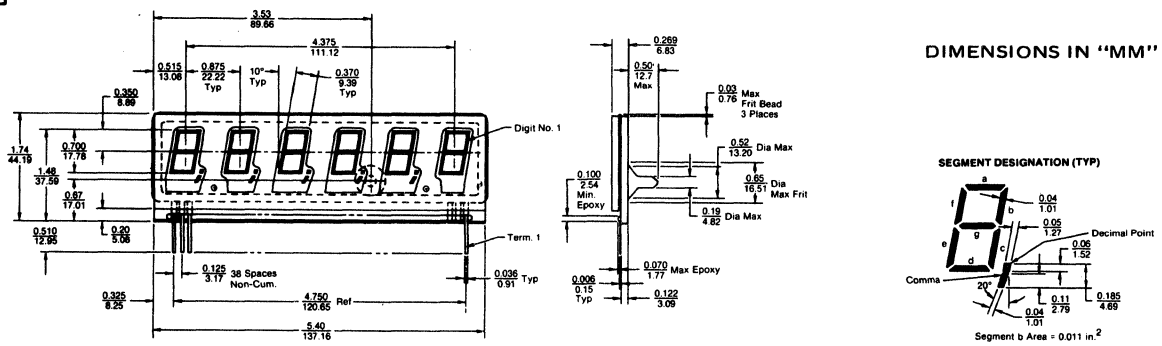

PY634

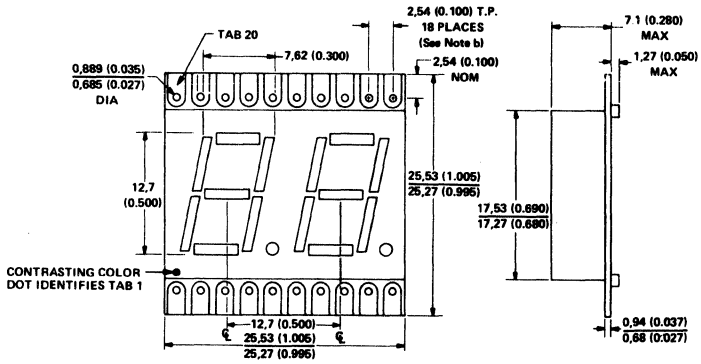

NOTES: a. All linear dimensions are in millimeters and parenthetically in inches.
b. The true position tab spacing is 2,54 (0.100). Each tab centerline is located within 0,254 (0.010) of its true position.
c. Dimensions associated with the digit segments and decimal points are nominal. The B, C, E, and F segments are at an angle of 10° with respect to the centerline of the display.

PY614

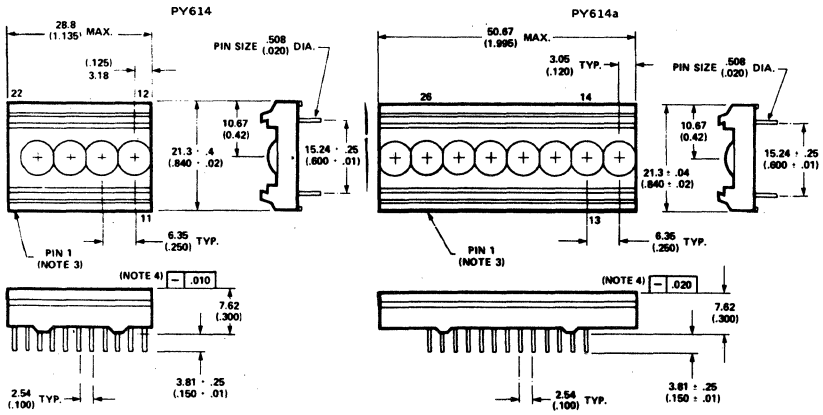

NOTES:
1. ALL DIMENSIONS IN MILLIMETRES AND (INCHES).
2. ALL UNTOLERANCED DIMENSIONS ARE FOR REFERENCE ONLY.
3. PIN 1 IDENTIFIED BY INK DOT ADJACENT TO LEAD.
4. DEVICE PACKAGE IS STRAIGHT WITHIN INDICATED LIMIT.

49. OUTLINE DRAWINGS

PY616

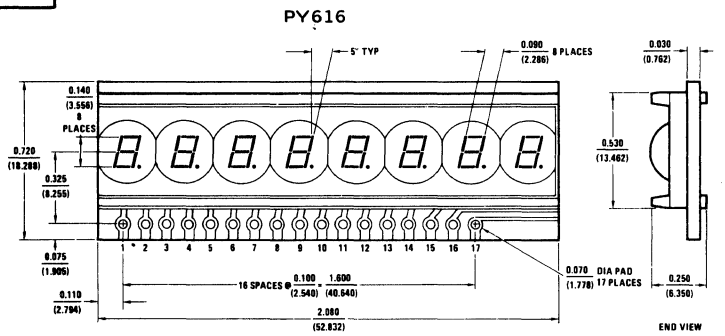

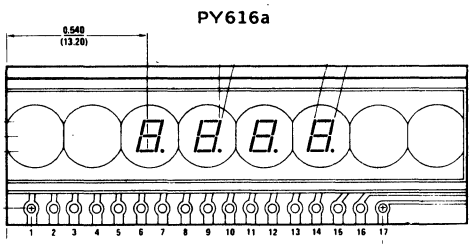

NOTE 1: MATERIAL PC-75 CIRCUIT BOARD OR APPROVED EQUIVALENT.

NOTE 2: 8 AND 4 DIGITS ON 0.260 CENTERS.

PY617

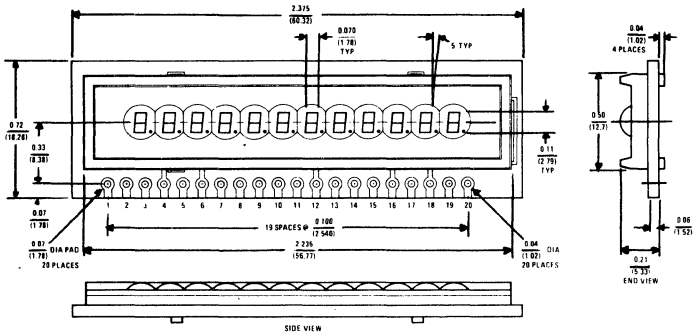

inches (millimeters)

Note 1: Material: PC-75 circuit board or approved equivalent.
Note 2: 12 digits on 0.175/(4.445) centers.
Note 3: All tolerance ±0.015 (0.381).

ALL DIGITS ON 0.175 (4.45) CENTERS

PY618

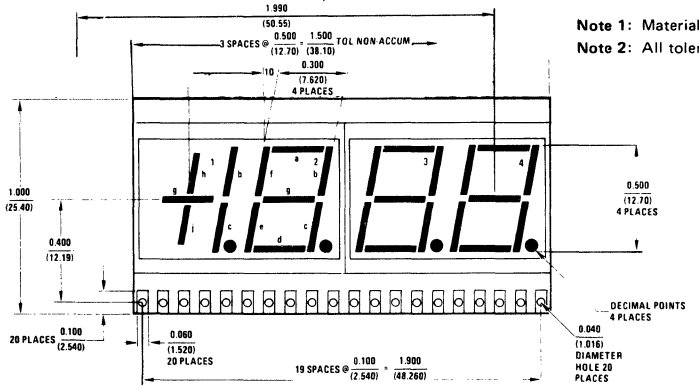

Note 1: Material: super-punch circuit board or approved equivalent 0.062 thick.
Note 2: All tolerances are 0.015 (0.38).

inches (millimeters)

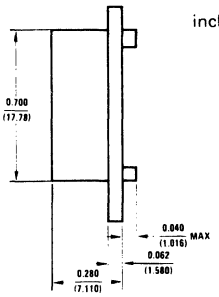

PY619

inches (millimeters)

Note 1: Material: superpunch or approved equivalent.
Note 2: Tolerances: ±0.015/(0.38).

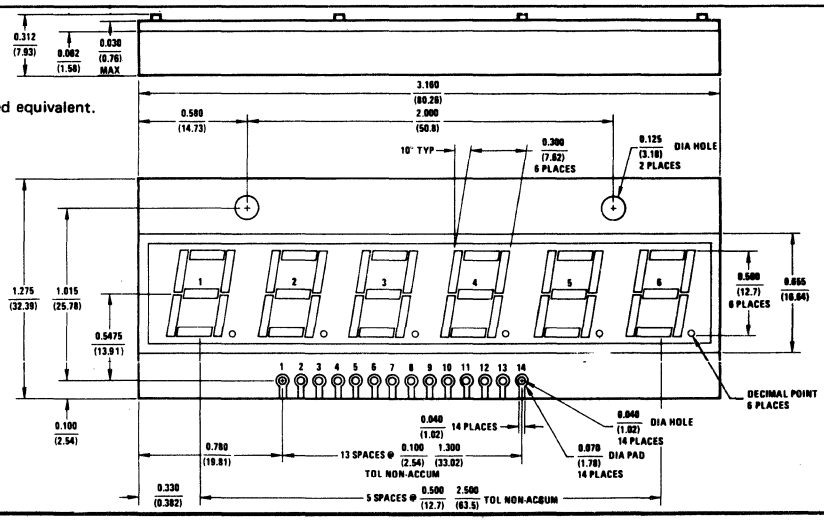

49. OUTLINE DRAWINGS

PY620

M	#1	Reflective
O	#2	Transmissive
D	#3	Transflective
E	#4	Diffused Reflective
	#5	Diffused Transflective

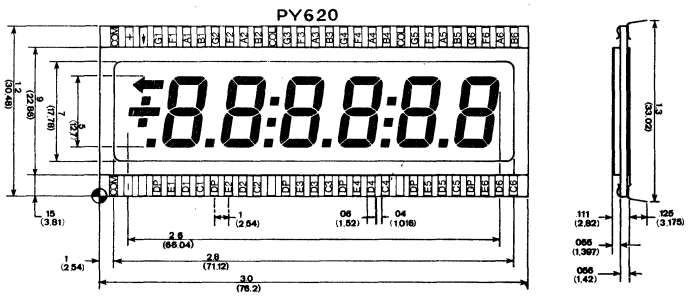

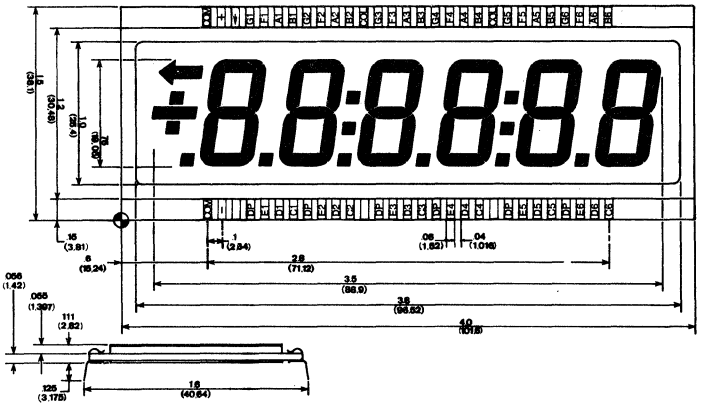

PY620a

PY621

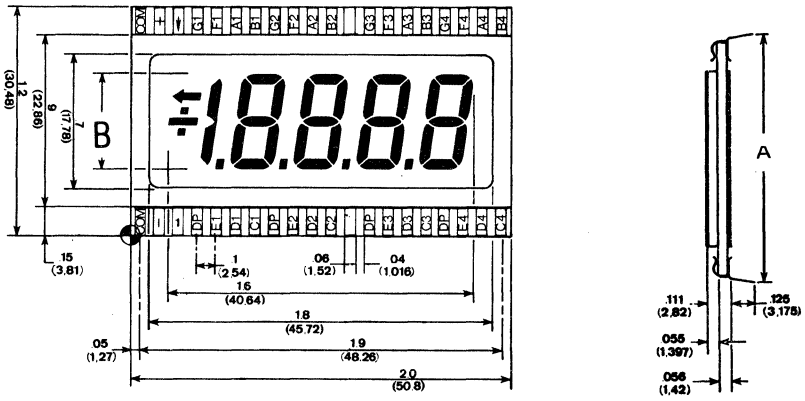

PY621

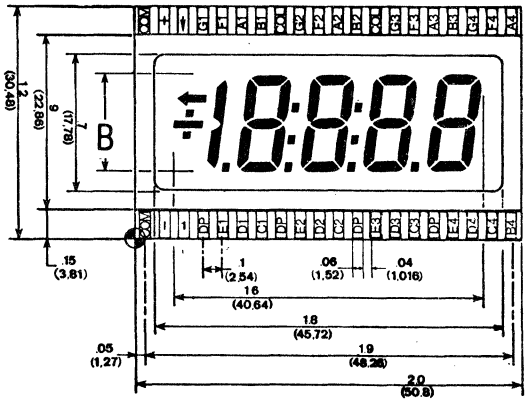

PY621a

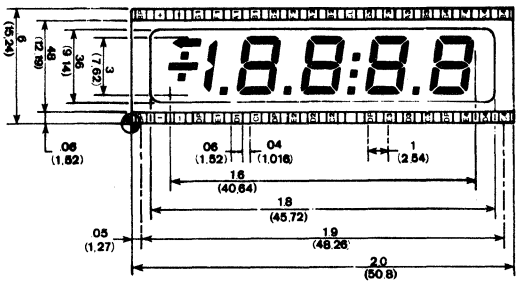

PY621b

	A	B
PY621	1.30	5.0
PY621a	1.30	5.0
PY621b	.600	
PY621c	1.30	.40

M	#1	Reflective
O	#2	Transmissive
D	#3	Transflective
E	#4	Diffused Reflective
	#5	Diffused Transflective

49. OUTLINE DRAWINGS

PY596

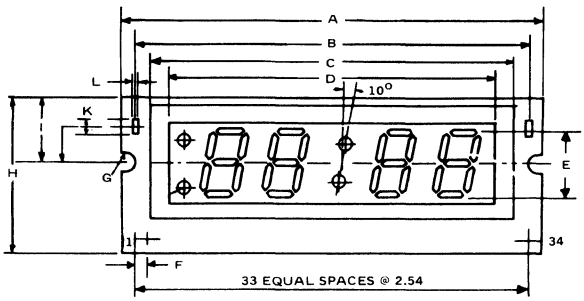

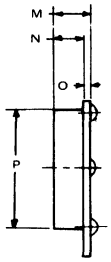

ALL DIMENSIONS IN MM

	A*	B*	C*	D	E	F	G	H*	I	J*	K*	L	M**	N	O	P*	PIN QTY
PY596	3,54	3,31	3,07	2,79	,600	,100	,072	1,30	,541	,295	,118	,047	,311	,248	,062	,944	34
PY596a	3,54	3,31	3,07	2,75	,600	,100	,072	1,30	,541	,295	,118	,047	,311	,248	,062	1,06	34
PY596b	3,62	3,38	3,32	2,75	,600	,100	,130	1,00	,409	,590	,125	,047	,303		,062	,708	35
PY596c	3,62	3,38	3,32	2,83	,600	,100	,130	1,03	,433	,590	,125	,047	,303		,062	,748	35
PY596d	3,70	3,31	3,07	2,75	,600	,100	,072	1,30	,541	,295	,118	,047	,311	,248	,062	,944	35
PY596e	3,62	3,38	3,32	2,83	,600	,100	,130	1,03	,433	,590	,125	,047	,303		,062	,748	35
PY596f	3,22		3,09	2,83	,600	,100		1,00	,433				,303		,062	,748	18
PY596g	3,62	3,38	3,32	2,83	,600	,100	,130	1,03	,433		,125	,047	,303		,062	,748	28
PY596h	3,62	3,38	3,32	2,83	,600	,100	,130	1,03	,433		,125	,047	,303		,062	,748	30
PY596m	3,54	3,38	3,32	2,83	,600	,100	,072	1,30	,541	,295	,118	,047	,311		,062	,944	18
PY596n	3,62	3,38	3,32	2,83	,600	,100	,130	1,03	,433		,125	,047	,303		,062	,708	28
PY596p	3,62	3,38	3,32	2,83	,600	,100	,130	1,03	,433		,125	,047	,303		,062	,708	30

*Tolerance ±0.5

**Tolerance 0.6
-0.3

PY636

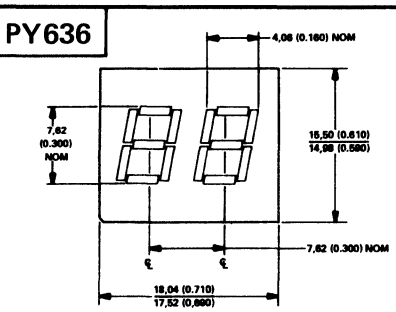

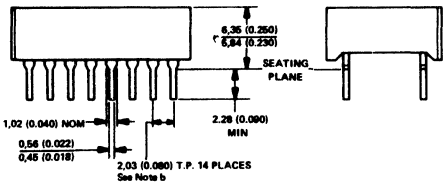

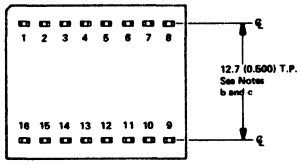

NOTES:

A. All dimensions are in millimeters and parenthetically in inches.

B. Each pin centerline is located within 0.26(0.010) of its true position (T.P.)

C. The spacing between row centerlines is measured at the seating plane.

PY637

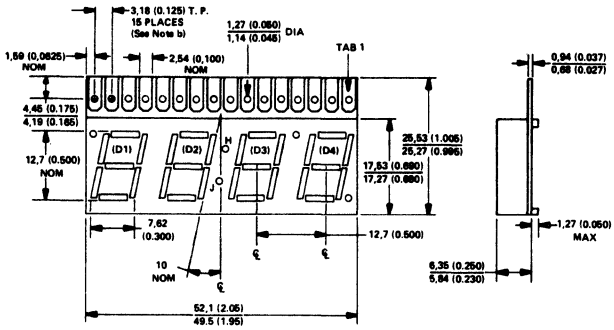

NOTES: a. All linear dimensions are in millimeters and parenthetically in inches.

b. The true position tab spacing is 3,18 mm (0,125 inch) between centerlines. Each tab centerline is located within 0,26 mm (0.010 inch) of its true position.

c. Dimensions associated with the digit segments, colon segments, alarm indicator, and PM indicator are nominal.

PY637

PY637a

PY637b

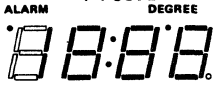

PY637c

Unused segments may or may not be omitted.

PY637d

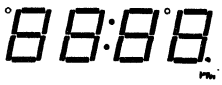

PY637e

49. OUTLINE DRAWINGS

PY638

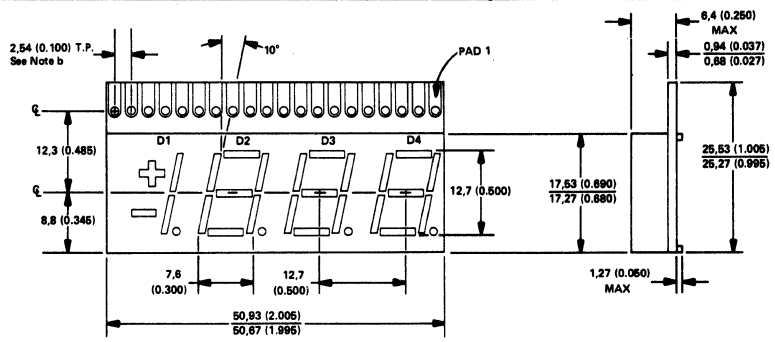

NOTES: a. All linear dimensions are in millimeters and parenthetically in inches.
b. True-position pad and wire hole spacing is 2,54 mm (0.100 inch) between centerlines. Each pad or hole centerline is located within 0,13 mm (0.005 inch) of its true position.
c. Dimensions associated with the digit segments are nominal.

PY639

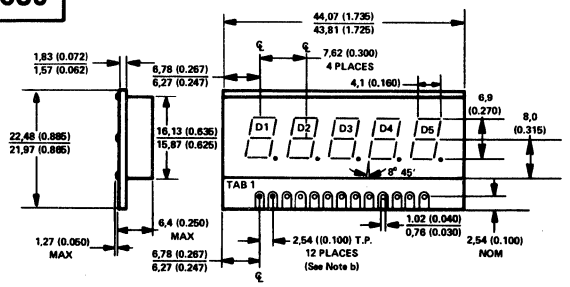

NOTES: a. All linear dimensions are in millimeters and parenthetically in inches.
b. The true-position tab spacing is 2,54 mm (0.100 inch) between centerlines. Each pad centerline is located within 0,127 (0.005) of its true position.
c. Dimensions associated with the digit segments and decimal points are nominal.
d. No decimal points for PY639a.

PY632

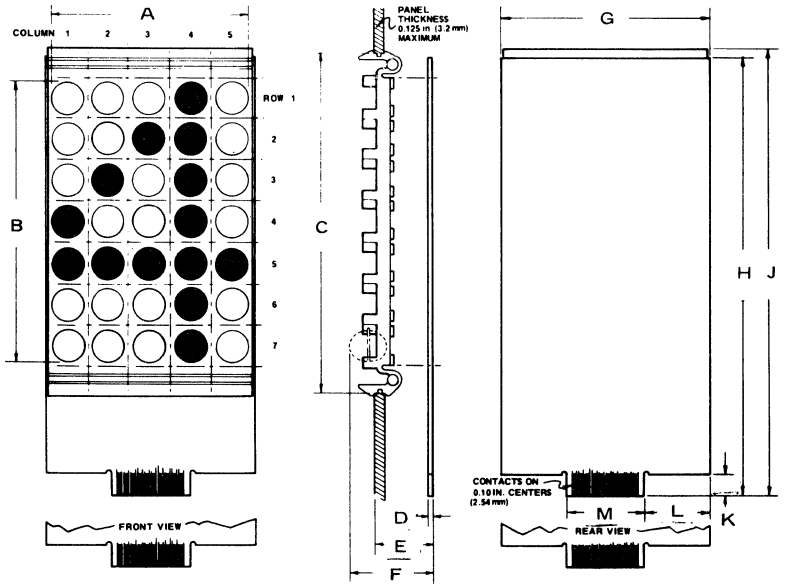

	A	B	C	D	E	F	G	H	J	K	L	M
PY632	1.95	2.70	3.35	.062	.780	1.04	2.03	4.47	4.57	.310	.470	1.08
PY632a	2.90	4.10	5.03	.062	.840	1.19	3.03	6.38	6.58	.310	.960	1.08

PY641

DIMENSIONS IN "MM"

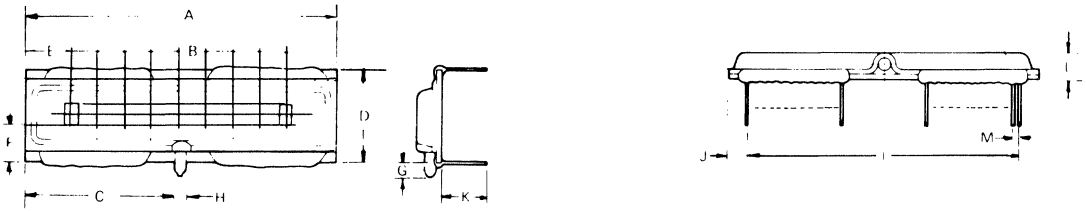

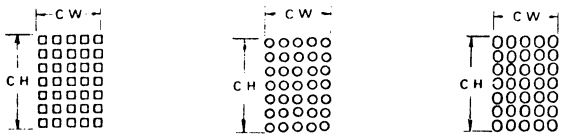

Pattern A Pattern B Pattern C

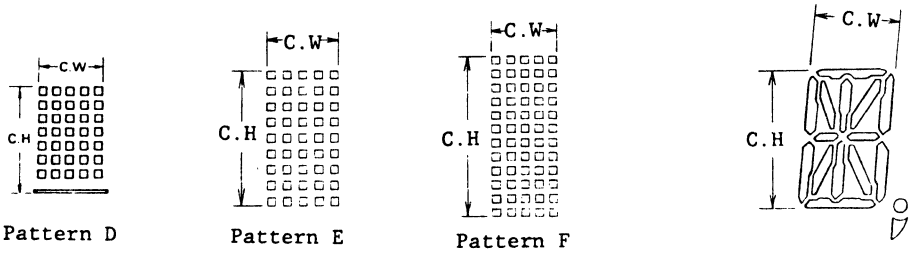

Pattern D Pattern E Pattern F Pattern G

	CHARACTER DIMENSIONS		OUTER DIMENSIONS													PATTERN
	CH	CW	A	B (SPACE PITCH)	C	D	E	F	G	H	I	J	K	L	M	
PY641	5.00	3.00	65.5	7.00-5.50	31.9	25.0	12.7	9.60	5.00	2.75	50.8	6.60	14.0	7.30	2.54	G
PY641a	6.00	3.20	102.0	11.0-6.00	48.0	34.8	17.0	14.2	6.00	4.00	81.2	9.36	14.0	8.50	2.54	G
PY641b	6.00	3.20	126.0	15.0-6.00	60.0	34.8	17.0	14.2	6.00	4.00	81.2	21.3	14.0	8.50	2.54	G
PY641c	9.35	4.80	172.0	15.0-8.40	82.5	41.8	22.0	16.6	9.00	5.00	142.2	13.8	14.0	10.0	2.54	G
PY641d	5.50	3.00	140.0	19.0-5.50	66.5	34.8	16.7	14.5	9.00	5.00	81.2	28.3	14.0	10.7	2.54	G
PY641e	9.00	5.40	210.5	19.0-8.50	101.5	42.2	23.2	17.1	9.00	5.00	81.2	63.3	14.0	10.5	2.54	G
PY641f	6.00	3.50	210.0	31.0-5.50	101.5	41.8	18.7	17.8	9.00	5.00	142.2	32.8	14.0	10.2	2.54	G
PY641g	5.05	3.55	76.2	8.00-6.00	36.0	25.0	12.9	9.50	5.00	3.00	71.1	1.94	14.0	7.20	2.54	A
PY641h	14.0	9.80	172.0	9.00-14.0	82.5	42.0	20.9	15.1	9.00	5.00	152.4	8.80	14.0	10.0	2.54	B
PY641i	5.05	3.30	102.0	15.0-4.75	48.0	34.8	14.4	14.5	6.00	4.00	91.4	4.28	14.0	8.50	2.54	A
PY641j	9.00	6.30	172.0	15.0-8.30	82.5	41.8	22.7	16.2	9.00	5.00	142.2	13.8	14.0	10.5	2.54	B
PY641k	11.3	7.25	210.0	15.0-10.9	101.5	41.8	22.2	14.8	9.00	5.00	142.2	32.8	14.0	98.5	2.54	C
PY641l	5.05	3.55	140.0	19.0-5.20	66.5	35.0	25.6	14.5	9.00	5.00	111.7	13.1	14.0	10.5	2.54	A
PY641m	9.00	6.30	210.5	19.0-8.30	101.5	42.0	17.1	16.2	9.00	5.00	142.2	32.8	14.0	10.5	2.54	B
PY641n	6.05	3.55	208.0	31.0-5.50	101.5	41.0	18.7	17.4	9.00	5.00	198.1	4.94	14.0	9.85	2.54	D
PY641o	6.55	3.55	208.0	31.0-5.50	101.5	41.0	18.7	17.2	9.00	5.00	198.1	4.90	14.0	9.85	2.54	E
PY641p	5.05	3.55	222.0	39.0-4.75	107.5	35.0	17.3	14.5	9.00	5.00	198.1	10.9	14.0	10.0	2.54	A
PY641q	6.05	3.55	222.0	39.0-4.75	107.5	34.8	17.3	14.0	9.00	5.00	198.1	10.9	14.0	10.0	2.54	D
PY641r	8.80	3.55	240.0	37.0-5.20	117.5	41.0	18.6	16.1	9.00	5.00	218.4	10.7	14.0	10.0	2.54	F
PY641t	5.05	3.55	222.0	39.0-4.75	107.5	50.8	17.3	16.1	9.00	5.00	198.1	10.9	14.0	12.2	2.54	A
PY641v	6.00	3.50	271.0	39.0-4.75		136.0	40.5	34.5	11.0	5.00				19.0		D
PY641aa	8.8	3.5	140.0			41.8							14.0	10.0	2.54	B
PY641ab	20	12	140.0			46.5							14.0	10.5	2.54	G
PY641ac	14.0	71.6	180.0			42.0							14.0	8.5	2.54	
PY641ad	11.6	67.0	102.0			38.5							14.0	8.5	2.54	
PY641ae	14.6	67.0	102.0			38.5							14.0	8.5	2.54	
PY641af	12.6	67.0	102.0			38.5							14.0	8.5	2.54	
PY641ag	11.3	67	102.0			38.5							14.0	8.5	2.54	
PY641ah	5.0	3.0	71.5			23.5							14.0	7.5	2.54	G
PY641ai	10.7	6.35	160.5			33.5							14.0	8.7	2.54	G
PY641aj	11.5	6.3	210.			43.2							14.0	10	2.54	G
PY641ak	5.25	2.8	222			34.8							14.0	10	2.54	G
PY641al	10	6.25	82			32.8							14.0	8.5	2.54	B
PY641am	5.0	3.5	148.8			98.8							14.0	17	2.0	B
PY641an	5.05	3.55	144			50.8							14.0	12.4	2.54	B
PY641ao	4.3	1.82	56.5			20.5							14.0	7.3	2.54	G
PY641ap	6.0	2.2	82			24							15.0	7.5	2.54	

SUFFIX	CH	CW	A	B	C	D	E	F	G	H	I	J	K	L	M
PY641aq	8.8	3.55	210	5.4	101.5	41.0	20.3	16.1	9.0	5.0	198.12	0.5	14		2.54

49. OUTLINE DRAWINGS

PY642

DIMENSIONS IN "MM"

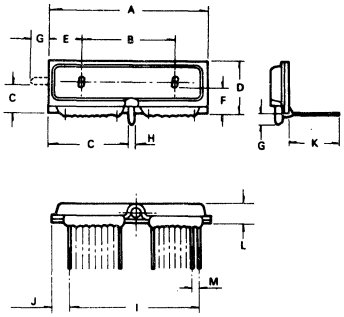

SEGMENT PATTERN

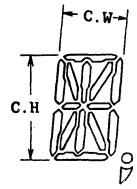

Pattern G

	CHARACTER DIMENSIONS		OUTER DIMENSIONS													PATTERN
	CH	CW	A	B (SPACE PITCH)	C	D	E	F	G	H	I	J	K	L	M	
PY642	8.00	4.80	113.5	9.00-8.70	54.0	26.2	16.8	10.2	6.00	4.00	81.2	15.3	14.0	9.35	2.54	G
PY642a	13.0	7.80	182.0	11.0-12.5	87.5	41.5	11.2	13.3	9.00	5.00	142.2	18.8	14.0	9.85	2.54	G
PY642b	4.50	2.30	59.5	7.00-4.60	27.9	21.2	12.5	10.1	5.00	2.20	48.2	4.85	14.0	6.50	2.54	
PY642c	5.00	2.00	56.1	7.00-4.60	27.4	20.2	10.6	8.90	5.00	2.75	50.8	2.10	7.00	6.70	2.54	
PY642d	5.00	2.35	66.5	8.00-5.10	32.5	23.5	11.1	10.0	5.50	3.00	50.8	7.10	14.0	7.20	2.54	
PY642e	8.00	3.60	94.5	10.0-6.50	44.0	27.0	10.5	10.3	6.00	4.00	81.2	6.10	14.0	9.50	2.54	
PY642f	9.50	4.00	140.0	10.0-9.50	66.5	40.0	21.5	16.4	9.00	5.00	111.7	13.1	14.0	10.5	2.54	
PY642g	5.30	2.40	87.5	12.0-5.00	41.6	21.2	13.0	8.50	5.00	2.75	76.2	4.90	14.0	7.30	2.54	
PY642h	6.50	2.90	94.5	12.0-5.50	44.5	26.5	11.8	11.0	6.00	4.00	81.2	5.90	14.0	9.50	2.54	
PY642i	8.00	3.30	113.5	12.0-6.30	54.1	26.2	18.2	10.2	6.00	4.00	81.2	15.3	14.0	9.50	2.54	
PY642j	9.50	4.00	140.0	12.0-8.00	66.5	40.0	21.0	16.2	9.00	5.00	111.7	13.1	14.0	10.5	2.54	
PY642k	9.50	4.00	140.0	12.0-8.00	66.5	39.5	21.0	16.2	9.00	5.00	116.8	10.5	14.0	10.5	2.54	
PY642l	6.50	2.90	114.0	14.0-5.80	54.1	26.5	15.4	11.0	6.00	4.00	91.4	10.2	14.0	9.50	2.54	
PY642m	10.0	6.50	58.0	3.00-8.50	27.0	27.0	14.8	10.2	6.00	4.00	50.8	3.60	14.0	8.50	2.54	
PY642n	10.0	5.00	82.0	4.00-10.5	38.0	30.5	19.0	11.0	6.00	4.00	73.6	3.17	14.0	8.50	2.54	
PY642o	12.0	6.00	102.0	4.00-12.5	47.5	41.0	24.8	14.5	9.00	5.00	81.2	9.40	14.0	10.5	2.54	
PY642p	12.5	7.00	94.0	4.00-12.0	44.0	35.5	16.0	12.2	6.00	4.00	81.2	5.36	14.0	8.50	2.54	
PY642q	14.0	7.95	140.0	4.00-20.0	66.5	40.0	29.0	13.5	9.00	5.00	81.2	28.4	14.0	10.5	2.54	
PY642r	15.0	8.00	102.0	4.00-14.5	48.0	38.5	21.0	13.2	6.00	4.00	81.2	9.36	14.0	8.70	2.54	
PY642s	9.50	4.50	82.0	5.00-8.60	38.0	30.5	18.5	11.2	6.00	4.00	73.6	3.17	14.0	8.50	2.54	
PY642t	11.5	5.80	102.0	5.00-11.0	47.5	41.0	22.5	14.9	9.00	5.00	81.2	9.40	14.0	12.5	2.54	
PY642u	14.0	7.95	140.0	5.00-17.5	66.5	40.0	25.2	14.2	9.00	5.00	81.2	28.4	14.0	10.5	2.54	
PY642v	12.6	8.00	160.0	6.00-13.0	77.0	33.5	15.0	10.2	7.00	4.00	142.2	7.88	14.0	8.50	2.54	
PY642w	14.5	7.20	172.0	8.00-13.5 1.00-22.0	82.5	40.0	18.9	13.5	9.00	5.00	111.7	29.1	14.0	10.5	2.54	
PY642x	9.50	4.00	102.0	8.00-8.00	47.5	39.5	18.0	16.4	9.00	5.00	81.2	9.36	14.0	10.5	2.54	
PY642y	9.50	4.00	102.0	8.00-8.00	47.5	39.5	18.0	16.4	9.00	5.00	81.2	9.36	14.0	10.5	2.54	
PY642z	12.0	6.00	140.0	7.00-12.0 1.00-13.0	66.5	40.0	19.0	15.5	9.00	5.00	116.8	10.5	14.0	10.5	2.54	
PY642aa	12.6	7.50	160.0	8.00-12.0	77.0	33.5	15.0	10.2	7.00	4.00	142.2	7.88	14.0	8.50	2.54	
PY642ab	14.5	7.20	172.0	8.00-15.0	82.5	40.0	25.0	13.5	9.00	5.00	111.7	29.1	14.0	10.5	2.54	
PY642ac	13.0	6.50	162.0	9.00-13.0	77.5	41.5	21.5	17.0	10.0	5.00	142.2	9.00	14.0	10.0	2.54	
PY642ad	7.60	4.20	56.5	2.00-7.62 2.00-5.08	12.1	25.2	14.8	9.70	5.20	2.75	38.1	7.18	14.0 7.62	7.20	2.54	
PY642ae	12.0	6.60	94.0	2.00-12.0 2.00-9.00	44.0	35.5	20.5	12.5	6.00	4.00	81.2	5.36	14.0	8.50	2.54	
PY642af	12.5	7.00	94.0	2.00-13.5 2.00-9.75	44.0	35.5	22.7	12.5	6.00	3.82	83.8	4.00	14.0	8.50	2.54	
PY642ag	25.0	12.0	142.0	2.00-19.5 2.00-13.5	67.5	61.0	20.5	18.5	9.00	5.00	81.2	29.0	14.0	12.0	2.54	
PY642ah	11.5	6.40	95.0	2.00-11.5 2.00-9.00	44.5	46.5	17.7	16.5	6.00	4.00	81.2	5.86	14.0	8.50	2.54	
PY642ai	16.3	67.0	102.0		48.0	38.5	16.0	11.8	6.00	4.00	81.2	9.40	14.0	8.50	2.54	
PY642aj	8.00	99.4	127.0	99.0-1.00	13.0	28.5	15.3	11.0	7.00	4.00	109.2	11.7	14.0	8.50	2.54	
PY642ak	8.00	84.4	127.0	99.0-.850	13.0	28.5	15.3	11.0	7.00	4.00	109.2	11.7	14.0	8.50	2.54	
PY642al	8.00	101.5	140.0	119.0-.850	66.0	40.0	13.8	16.5	9.00	5.00	116.8	10.5	14.0	10.5	2.54	
PY642am	7.6	4.2	60			30.8							14.0	8.5	2.54	G
PY642an	18.2	71.1	108.			42							14.0	8.5	2.54	
PY642ao	25.4	63	98.8			54.8							14.0	11.2	2.54	
PY642ap	21.1	61	95			46.5							14.0	9.0	2.54	
PY642aq	3.65	2.3	286			196								20		B
PY642ar	47.4	48.6	88.8			90.8							14.0	12.4	2.54	
PY642as	79.4	79.4	169			119							14.0	19	2.54	
PY642at	76.5	76.6	200			170								19		
PY642au	102.2	162.2	185			167								19		
PY642av	15.3	82.9	135			49							14.0	12	2.54	
PY642aw	15	8.4	94			35							14.0	8.7	2.54	
PY642ax	41.3	166.1	291			141								21		
PY642ay	15	8.5	114			48.8							14.0	10	2.54	
PY642az	9.0	5.5	94			35							14.0	8.6	2.54	
PY642ba	9.5	4.0	129			33							34	8.7	2.54	
PY642bb	7.6	4.4	133			120							14.0	17.5	2.54	
PY642bc	11	6.5	100			35							14.0	8.5	2.54	

SUFFIX	CH	CW	A	B	C	D	E	F	G	H	I	J	K	L	M
PY642 bd	16.9	6.0	162.5	11-10.3		41.5	23.6	16.95	9.0	5.0	86.36	37.07		10.0	2.54
PY642 be	12.0	6.35	160	10.7		31.0	21.0			4.0	86.36	36.82		10.00	2.54
PY642 bf	12.0	6.35	200	15-10.7		31.0	19.0			4.0	96.52	51.74		8.0	2.54
PY642 bg	18.0	6.0	149	10-10.6		36.0	20.25		9.0	4.0	129.24	8.88		8.0	2.54
PY642 bh	8.1	5.7	138	9.5		39	21.5			5.0		4.0	14	12.5	2.54

PY643

DIMENSIONS IN "MM"

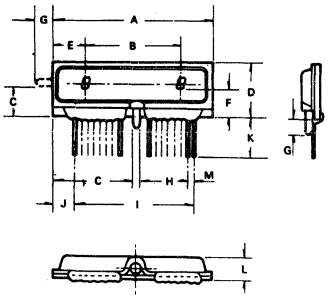

	CHARACTER DIMNSIONS		OUTER DIMENSIONS												
	CH	CW	A	B (SPACE PITCH)	C	D	E	F	G	H	I	J	K	L	M
PY643	5.00	2.40	66.5	8.00-5.00	32.5	23.5	12.5	10.0	5.50	3.00	50.8	7.10	14.0	7.20	2.54
PY643b	5.25	2.45	76.5	10.0-5.00	36.0	22.2	12.5	9.70	5.00	3.00	71.1	1.90	34.0	7.20	2.54
PY643c	5.75	2.45	76.5	10.0-5.00	36.0	22.0	12.5	9.20	5.00	3.00	71.1	1.94	14.0	7.20	2.54
PY643d	5.75	2.45	76.5	10.0-5.00	36.0	22.2	12.5	9.12	5.00	3.00	71.1	1.94	15.0	7.40	2.54
PY643e	6.50	3.00	94.5	10.0-6.60	44.5	26.5	12.0	10.9	6.00	4.00	81.2	5.86	34.0	9.50	2.54
PY643f	6.50	2.90	95.0	12.0-5.50	44.5	26.5	11.8	11.0	6.00	4.00	81.2	5.86	14.0	9.50	2.54
PY643g	8.00	3.30	113.5	12.0-6.60	54.1	26.2	16.4	10.2	6.00	3.80	81.2	15.3	34.0	9.50	2.54
PY643h	9.50	4.00	140.0	12.0-8.00	66.5	39.5	21.0	16.2	9.00	5.00	116.8	10.5	34.0	10.5	2.54
PY643i	6.50	2.90	113.5	14.0-6.00	54.0	26.2	14.0	10.7	6.00	4.00	91.4	10.2	34.0	9.50	2.54
PY643j	14.5	8.70	81.0	3.00-14.0	37.5	34.5	19.3	12.5	6.00	4.00	73.6	2.70	14.0	8.50	2.54
PY643k	11.0	6.90	81.0	4.00-10.8	37.5	34.5	18.3	12.5	6.00	4.00	73.6	2.70	14.0	8.50	2.54
PY643l	15.0	7.40	210.0	11.0-14.9	101.5	41.0	22.0	13.0	7.00	5.00	152.4	27.8	14.0	9.85	2.54
PY643m	8.00	4.20	56.5	2.00-7.00 2.00-5.00	12.1	25.5	13.0	9.50	7.00	2.75	50.8	2.10	14.0	7.00	2.54
PY643n	7.60	4.20	56.4	2.00-7.62 2.00-5.08	12.1	25.2	15.0	8.45	5.00	2.75	38.1	7.38	14.0	7.00	2.54
PY643o	15.0	7.00	102.0	2.00-13.0 2.00-10.0	48.0	38.5	16.1	12.5	9.00	4.00	93.9	3.01	34.0	8.50	2.54

SUFFIX	CH	CW	A	B	C	D	E	F	G	H	I	J	K	L	M
PY643p	7.6	2.9	94.5	5.5		26.2	12.0	11.0	6.0	4.0	81.28	5.86	34.0	9.5	2.54
PY643q	6.7	2.4	75.2	4.8		22.8	13.6		5.0	2.4	63.7	6.0	21.5	7.5	2.54

49. OUTLINE DRAWINGS

PY644

DIMENSIONS IN "MM"

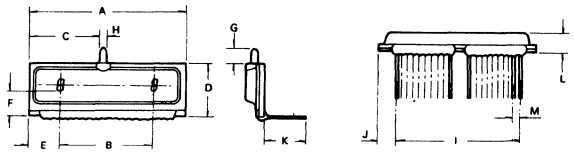

	CHARACTER DIMENSIONS		OUTER DIMENSIONS												
	CH	CW	A	B (SPACE PITCH)	C	D	E	F	G	H	I	J	K	L	M
PY644	4.50	1.75	72.5	12.0-4.00	52.5	20.8	11.5	8.85	5.50	3.00	58.4	6.29	14.0	6.80	2.54
PY644a	14.0	7.00	140.0	8.00-11.9	66.5	39.5	21.4	13.5	9.50	5.00	111.7	13.1	14.0	16.0	2.54

PY645

DIMENSIONS IN "MM"

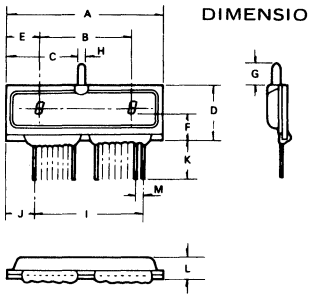

	CHARACTER DIMENSIONS		OUTER DIMENSIONS												
	CH	CW	A	B (SPACE PITCH)	J	D	E	F	G	H	I	J	K	I	M
PY645	5.50	3.30	46.5	2.00-5.60 2.00-3.80	21.1	20.7	13.1	8.00	5.50	2.75	38.1	3.45	7.00	7.20	2.54

PY646

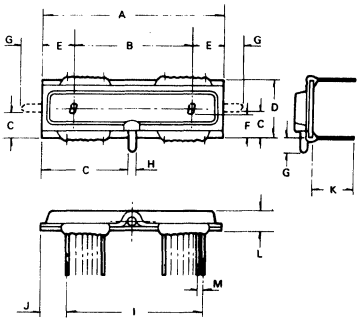

	CHARACTER DIMENSIONS		OUTER DIMENSIONS												
	CH	CW	A	B (SPACE PITCH)	C	D	E	F	G	H	I	J	K	L	M
PY646	9.50	4.00	102.0	8.00-8.00	47.5	41.0	18.0	15.9	9.00	5.00	81.2	9.40	14.0	10.5	2.54
PY646a	3.70	1.50	66.5	11.0-3.80	32.3	25.0	10.9	10.2	5.00	3.00	50.8	7.10	21.0	7.50	2.54
PY646b	5.00	2.40	76.2	11.0-4.50	36.0	25.0	13.3	9.50	5.00	3.00	50.8	11.9	14.0	7.20	2.54
PY646c	9.50	4.00	140.0	12.0-8.00	66.5	41.0	21.0	15.7	9.00	5.00	81.3	28.4	14.0	10.5	2.54
PY646d	3.70	1.70	76.5	13.0-4.00	36.0	25.0	10.5	10.1	5.00	3.00	50.8	12.1	21.0	7.20	2.54
PY646e	9.50	3.70	140.0	14.0-6.90	66.5	41.0	20.7	15.9	9.00	5.00	81.3	28.4	14.0	10.5	2.54
PY646f	9.50	4.90	172.0	16.0-8.00	82.5	41.0	21.0	16.1	9.00	5.00	81.2	44.4	14.0	10.5	2.54
PY646g	10.0	4.60	60.0	3.00-8.50	27.0	29.5	14.7	9.50	6.00	4.00	50.8	3.60	14.0	8.50	2.54
PY646h	7.60	4.20	56.5	2.00-7.62 2.00-5.08	12.6	28.7	14.8	10.2	7.00	2.75	43.1	5.90	14.0	7.00	2.54
PY646i	7.60	4.00	50.0	2.00-7.78 2.00-4.08	22.8	27.5	14.4	9.70	5.00	2.75	40.6	3.73	8.50	6.50	2.54
PY646j	8.00	100.4	127.0	100.0-1.00	13.0	30.5	15.3	11.0	7.00	4.00	109.2	11.7	14.0	8.50	2.54
PY646k	5.0	3.0	71.5	5.1		23.0	12.05	8.675	5.5	2.4	50.8	9.6	14.0	7.5	2.54

PY647

DIMENSIONS IN "MM"

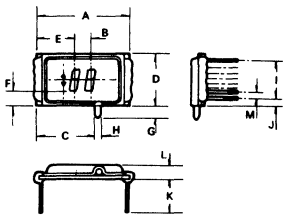

	CHARACTER DIMENSIONS		OUTER DIMENSIONS												
	CH	CW	A	B (SPACE PITCH)	C	D	E	F	G	H	I	J	K	L	M
PY647	10.0	4.50	42.5	1.00-6.60	26.1	24.0	16.5	6.00	5.00	2.75	18.0	2.00	14.0	7.20	2.00
PY647a	12.6	5.50	45.5	1.00-8.00	30.1	27.0	19.0	6.20	5.00	2.75	18.0	3.50	14.0	7.20	2.00

PY648

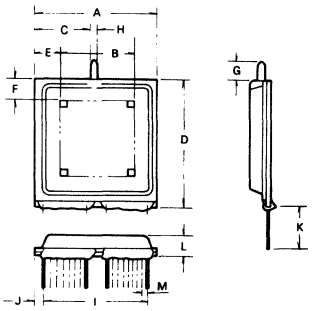

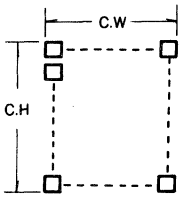

DIMENSIONS IN "MM"

	CHARACTER DIMENSIONS		OUTER DIMENSIONS												
	CH	CW	A	B (SPACE PITCH)	C	D	E	F	G	H	I	J	K	L	M
PY648	77.5	77.5	133.0	19.0-4.00	62.0	116.0	27.0	21.0	11.0	5.00	16.8	6.58	14.0	17.0	2.54
PY648b	16.6	167.4	226.0	257.0-.650	110.5	60.0	29.2	21.6	9.00	5.00	203.2	11.4	14.0	12.0	2.54

49. OUTLINE DRAWINGS

PY657

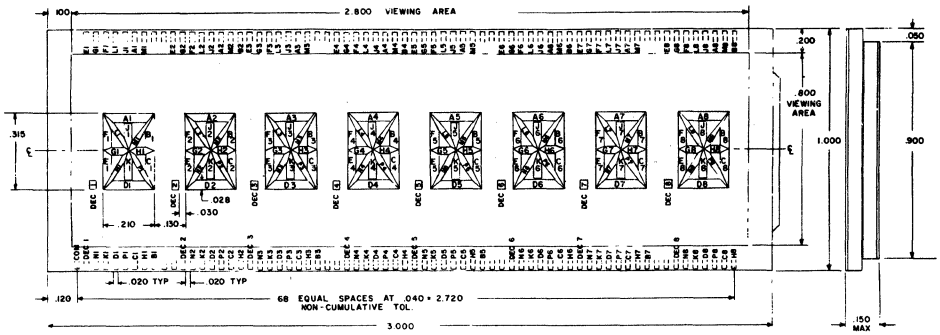

PY669

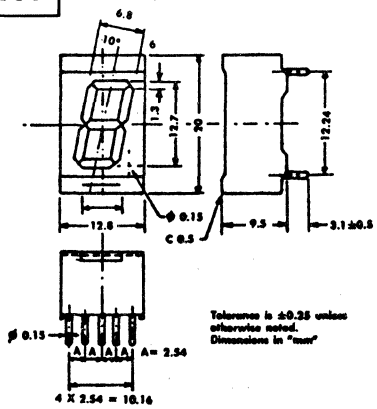

PY670

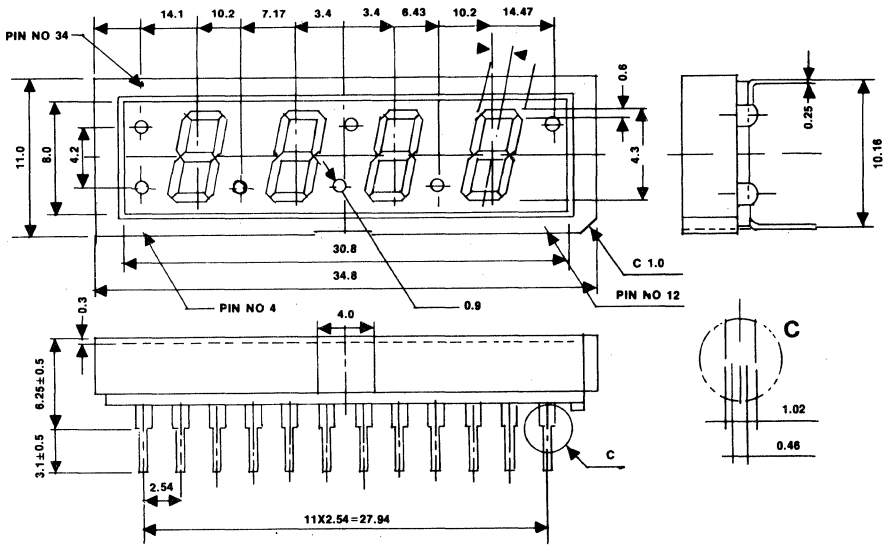

PY671

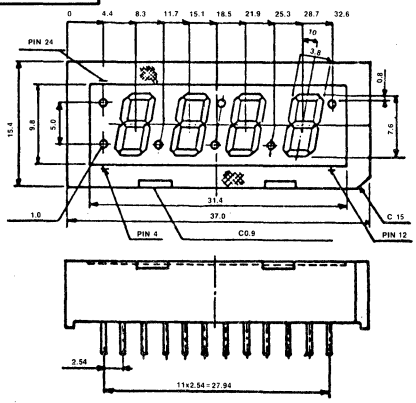

PY674

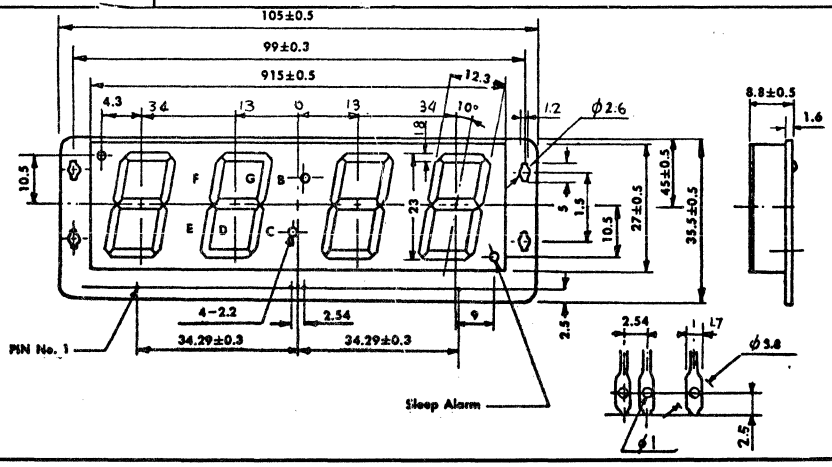

49. OUTLINE DRAWINGS

PY677

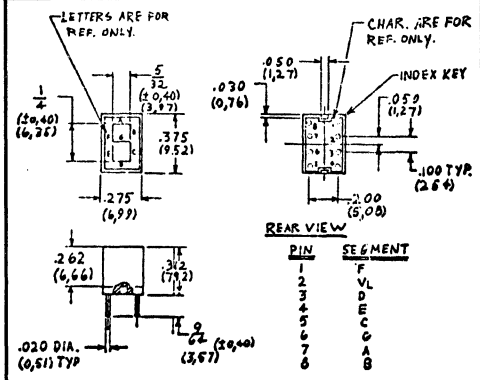

PY653

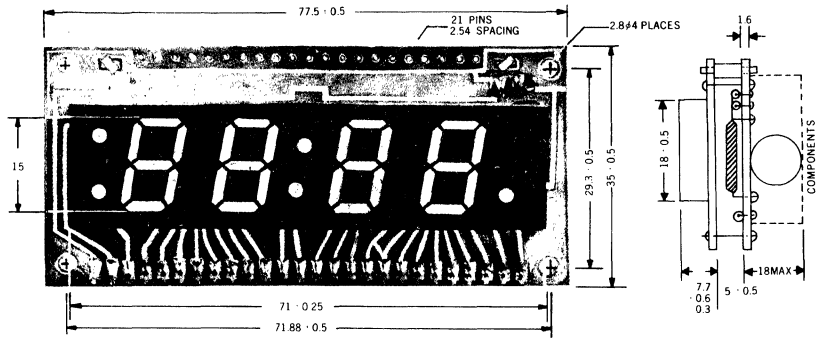

PY680

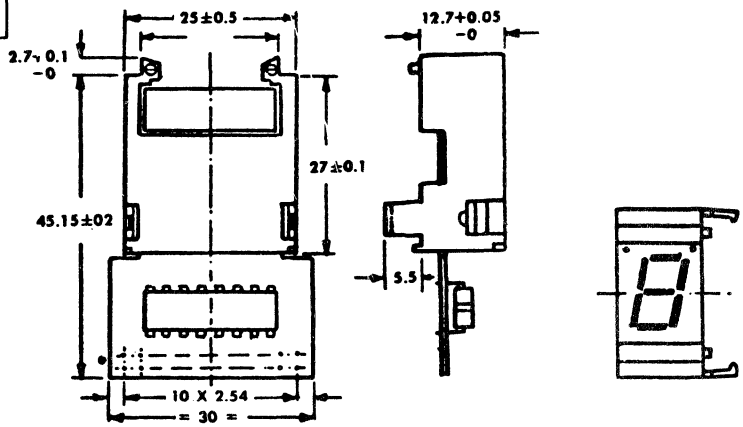

PY683

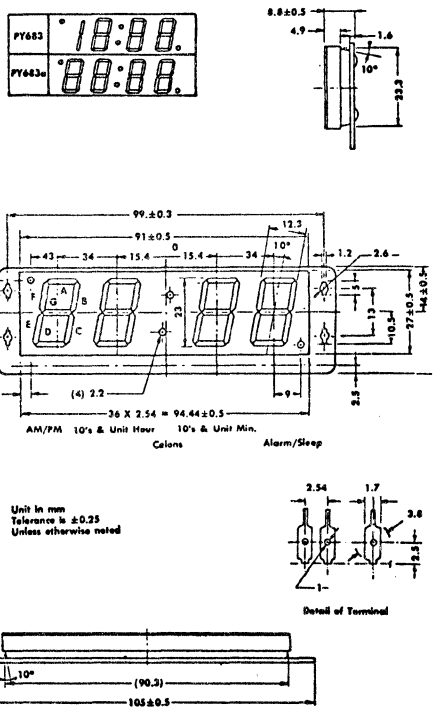

PY684

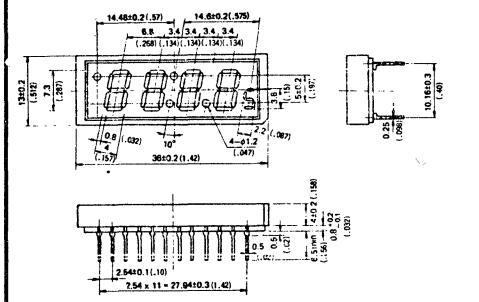

PY685

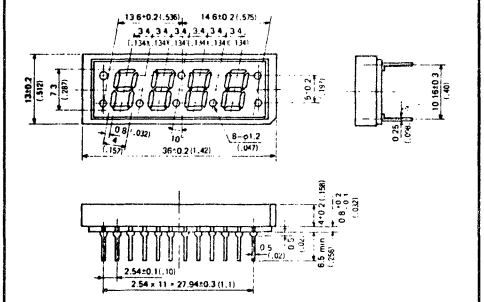

PY686

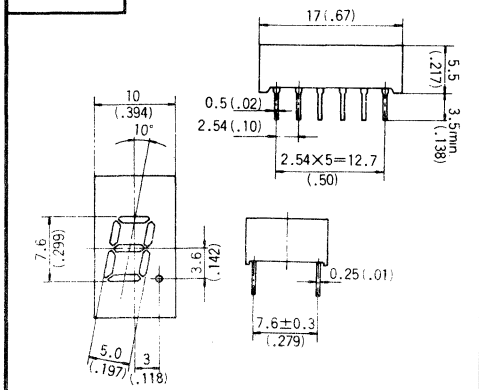

PY690

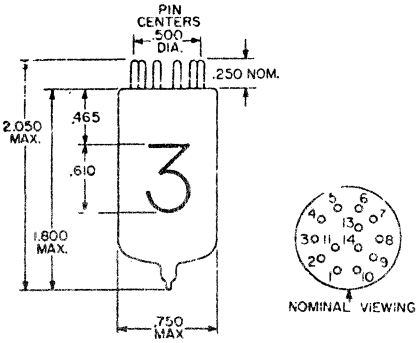

49. OUTLINE DRAWINGS

PY707

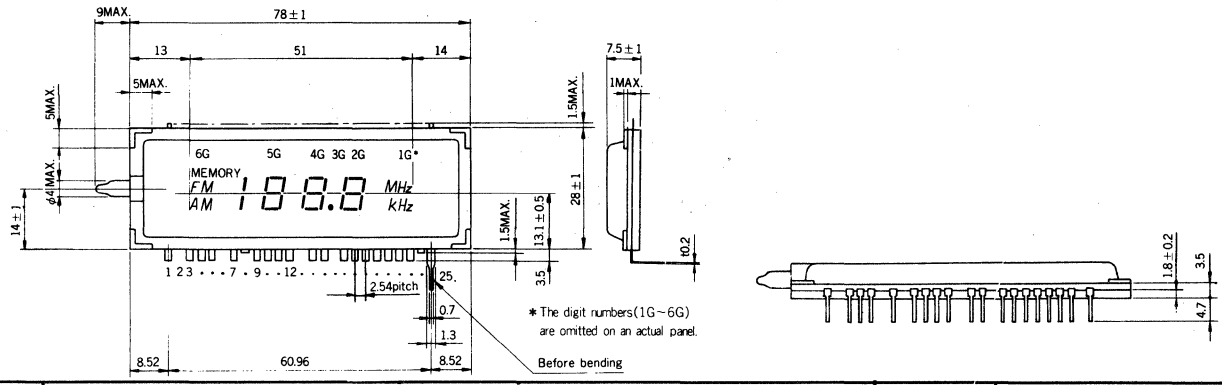

PY708

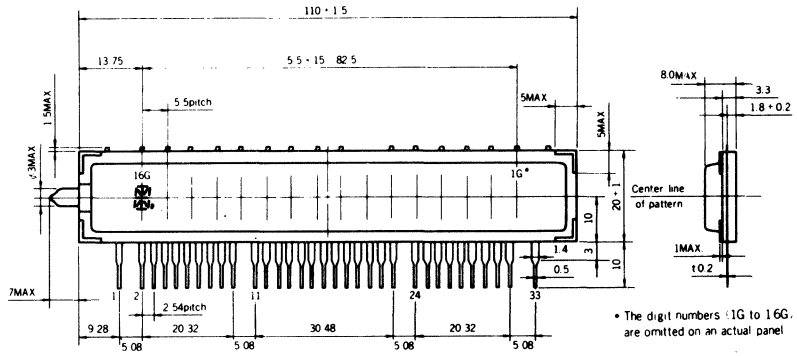

PY709

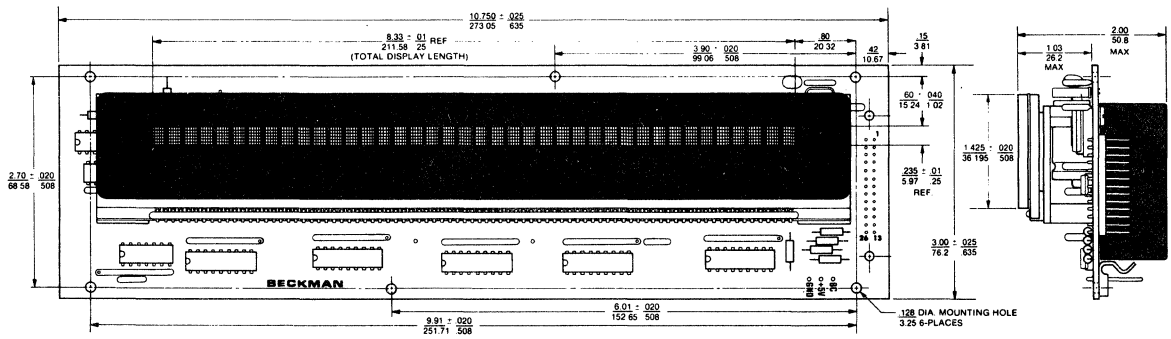

PY711

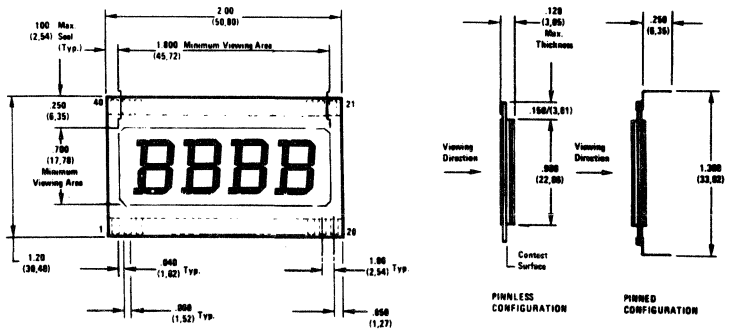

NOTES

1 Maximum thickness includes front and back polarizers plus reflector attached.

2 Dimensions: Inches (mm)

49. OUTLINE DRAWINGS

PY712

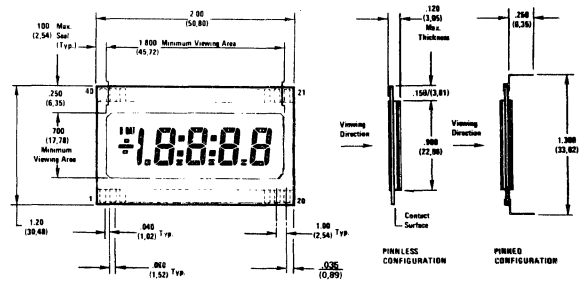

NOTES
1 Maximum thickness includes front and back polarizers plus reflector attached.
2 Dimensions: Inches (mm)

PY713

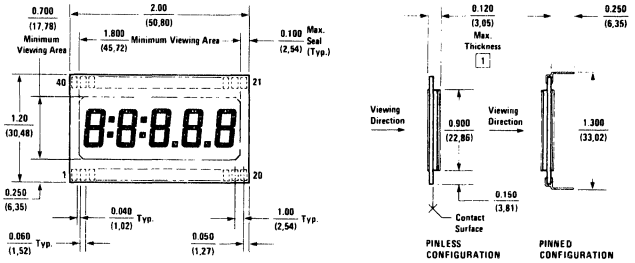

NOTES
1 Maximum thickness includes front and back polarizers plus reflector attached.
2 Dimensions: Inches (mm)

PY716

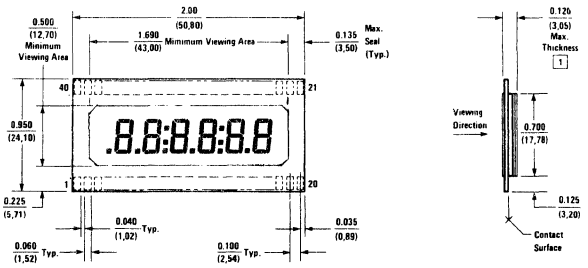

NOTES
1 Maximum thickness includes front and back polarizers plus reflector attached.
2 Dimensions: Inches (mm)

PY715

NOTES
1 Maximum thickness includes front and back polarizers plus reflector attached.

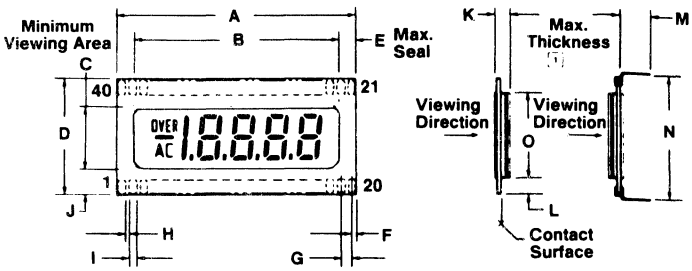

	A	B	C	D	E	F	G	H	I	J	K	L	M	N	O
PY715	2.00	1.69	.500	.950	.135	.035	.100 TYP	.040 TYP	.060 TYP	.225	.120	.125	.250	1.047	.700
PY715a	2.00	1.80	.524	.950							.104			1.05	

PY714

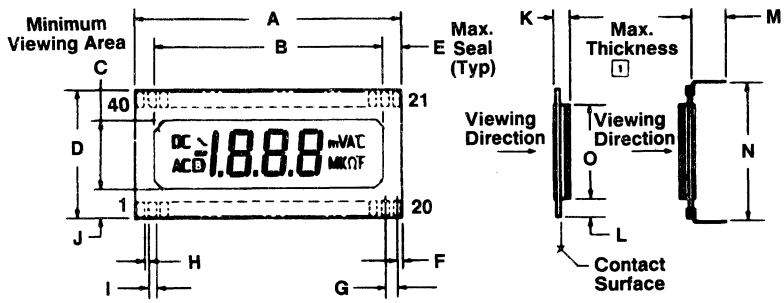

NOTES
1 Maximum thickness includes front and back polarizers plus reflector attached.

	A	B	C	D	E	F	G	H	I	J	K	L	M	N	O
PY714	2.00	1.69	.500	.950	.135	.035	.100 TYP	.040 TYP	.060 TYP	.225	.120	.125	.250	1.047	.700
PY714a	2.00	1.80	.524	.950							.104			1.05	

PY718

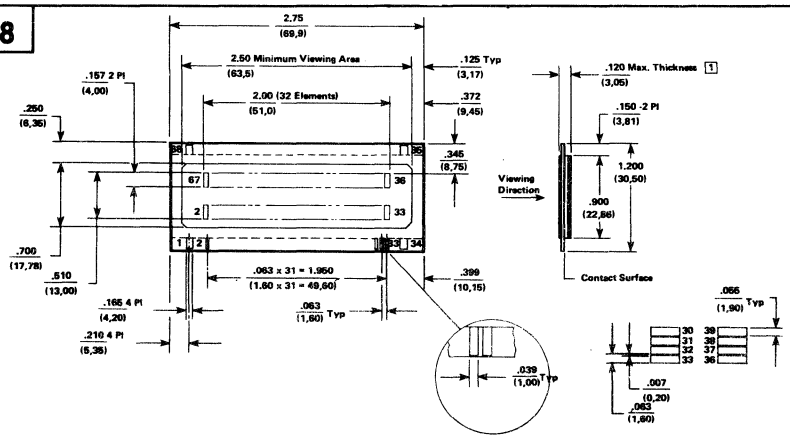

NOTES
1 Maximum thickness includes front and back polarizers plus reflector attached.
2 Dimensions: Inches (mm)

49. OUTLINE DRAWINGS

PY721

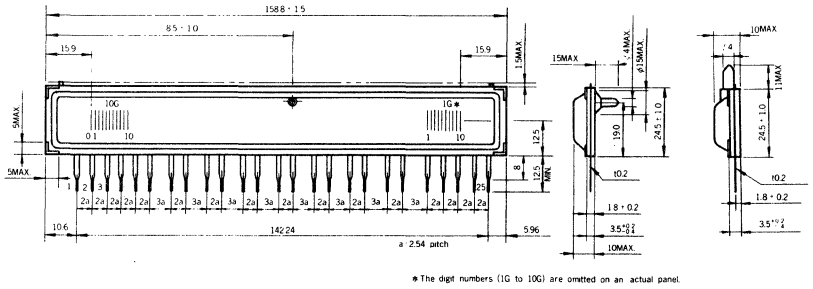

*The digit numbers (1G to 10G) are omitted on an actual panel.

TERMINAL CONNECTION

Terminal No.	1	2	3	4	5	6	7	8	9	10	11	12	13	14	15	16	17	18	19	20	21	22	23	24	25
Electrode	F	10G	NC	P_0	9G	P_1	8G	P_2	7G	P_3	6G	P_4	5G	P_5	4G	P_6	3G	P_7	2G	P_8	1G	P_9	$P_{10(E)}$	$P_{10(O)}$	F

note. 1 Segment P_0 is controlled by 10G
2: $P_{10(E)}$ denotes 10th segment of even digit.
3: $P_{10(O)}$ denotes 10th segment of odd digit

PY722

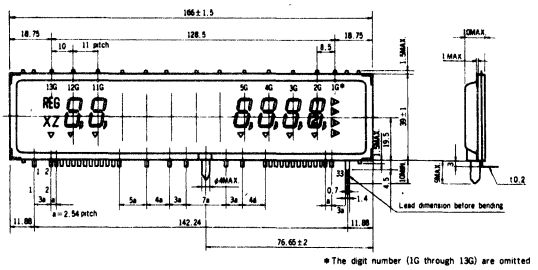

*The digit number (1G through 13G) are omitted

PY723

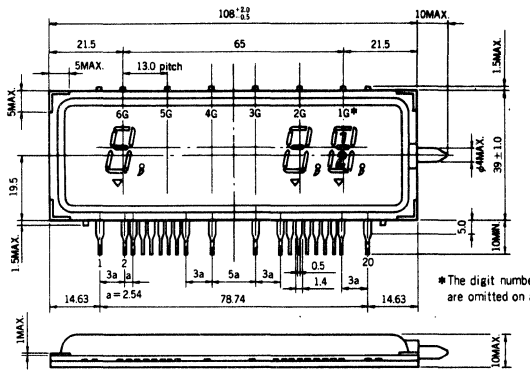

*The digit numbers (1G to 6G) are omitted on an actual panel.

PY725

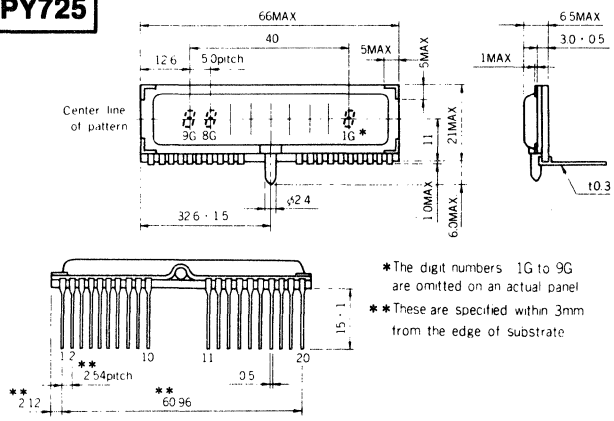

*The digit numbers 1G to 9G are omitted on an actual panel
**These are specified within 3mm from the edge of substrate

PY726

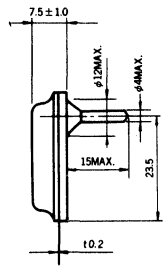

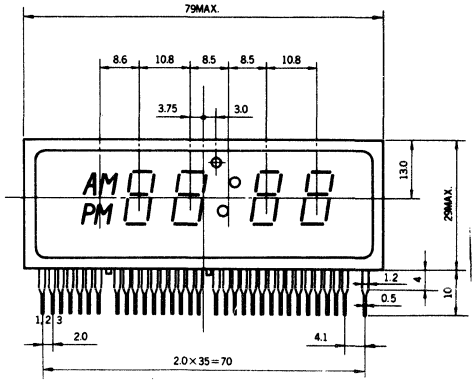

PY727

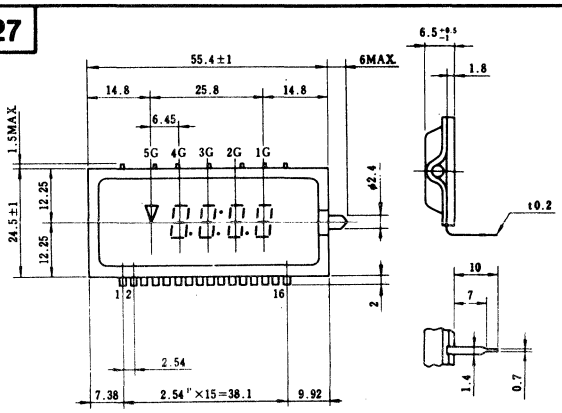

49. OUTLINE DRAWINGS

PY729

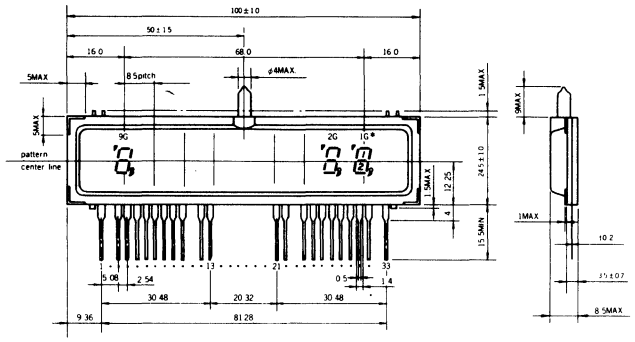

* The digit numbers (1G to 9G) are omitted on an actual panel.

PY730

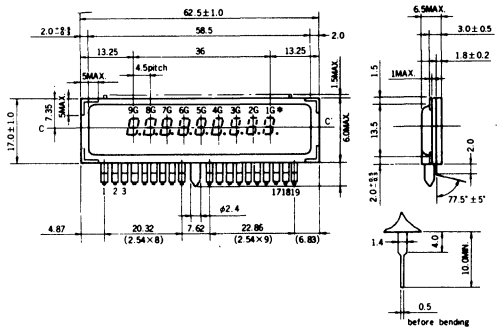

PY732

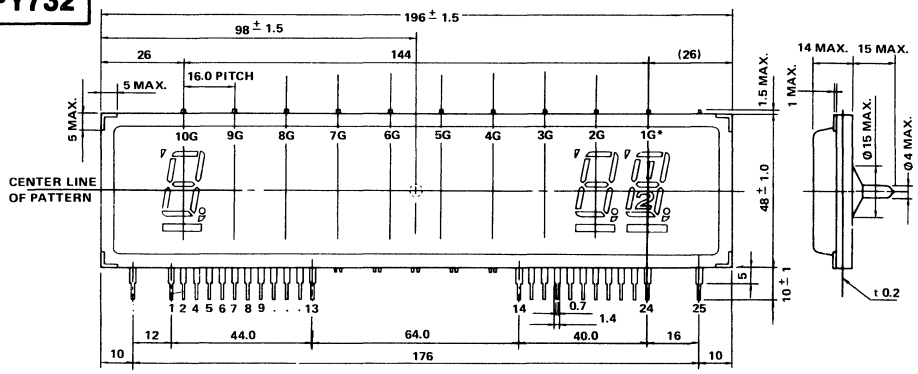

* THE DIGIT NUMBERS (1G THROUGH 10G) ARE OMITTED ON AN ACTUAL PANEL.

PY733

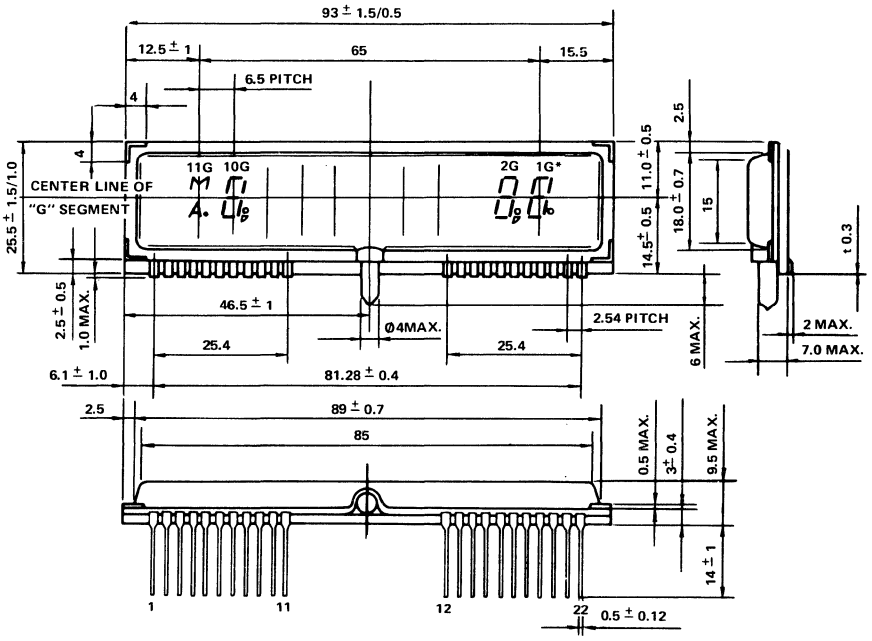

* THE DIGIT NUMBERS (1G THROUGH 11G) ARE OMITTED ON AN ACTUAL PANEL.

49. OUTLINE DRAWINGS

PY734

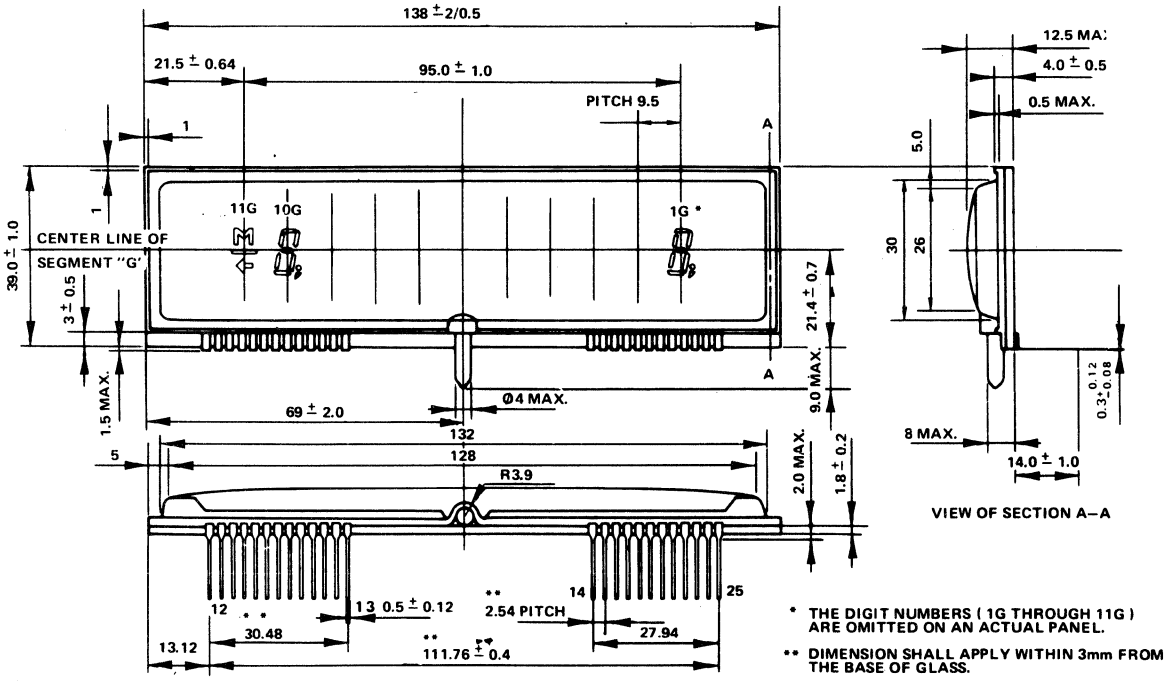

* THE DIGIT NUMBERS (1G THROUGH 11G) ARE OMITTED ON AN ACTUAL PANEL.

** DIMENSION SHALL APPLY WITHIN 3mm FROM THE BASE OF GLASS.

PY735

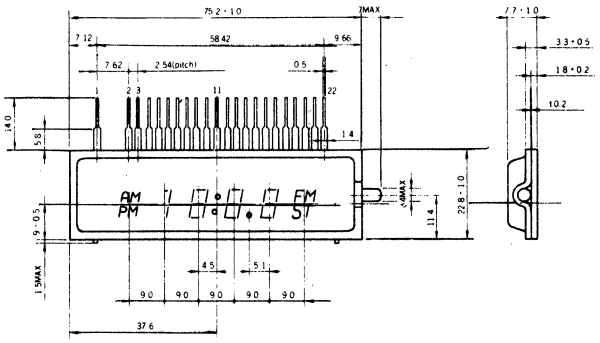

PY739

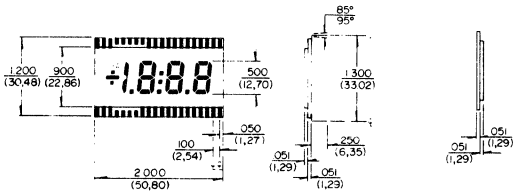

PY740

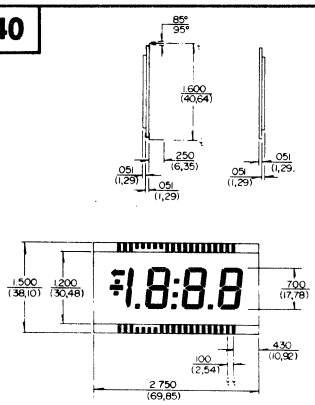

PY741

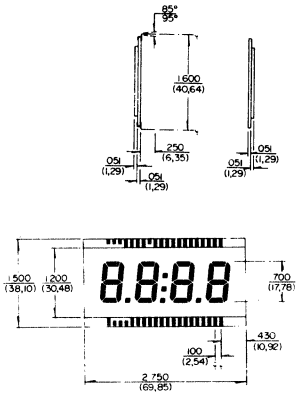

PY742

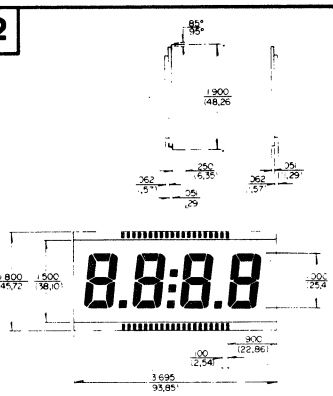

49. OUTLINE DRAWINGS

PY743

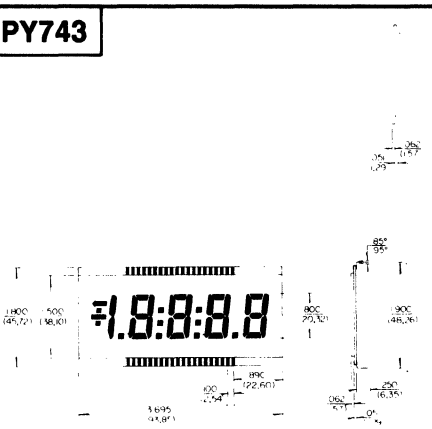

PY744

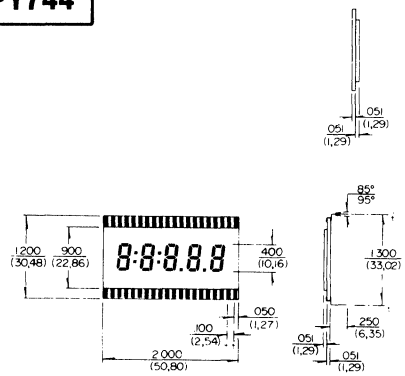

PY749

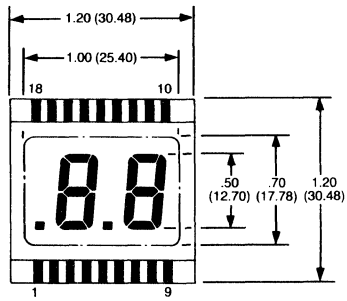

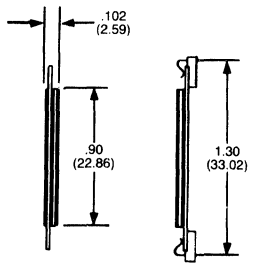

	A	B	C	D	E	F	G	H
PY749	1.2	.900	.50	.90	1.20			1.30
PY749a	1.2	1.00	.50	.70	1.20	.102	.90	1.30

PY747

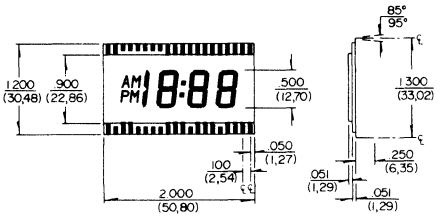

PY748

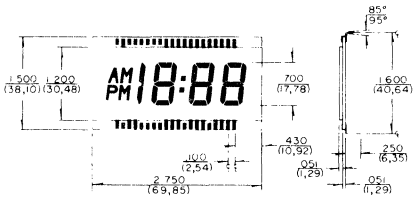

PY750

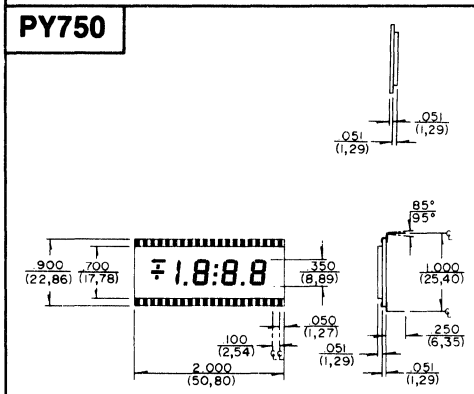

PY751

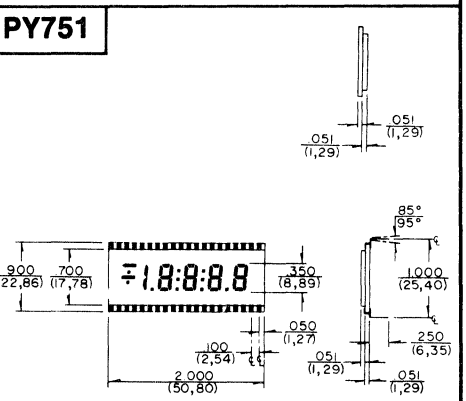

PY752

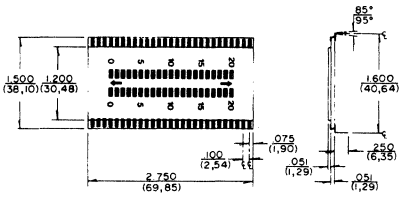

PY793

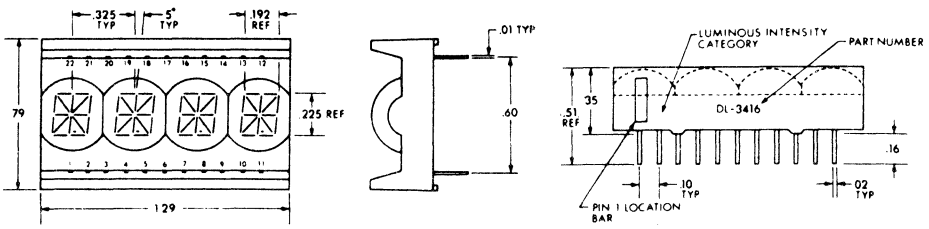

49. OUTLINE DRAWINGS

PY760

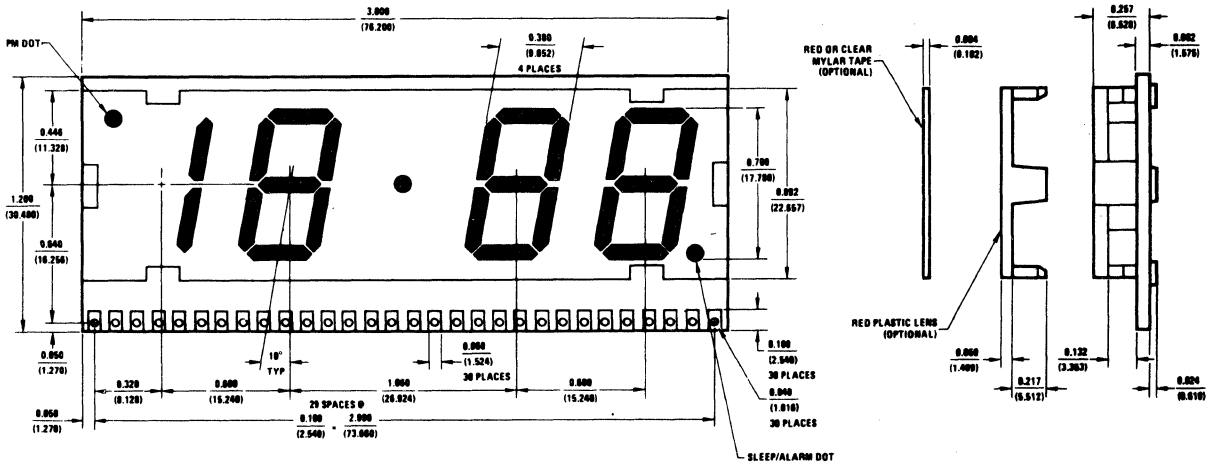

PY762

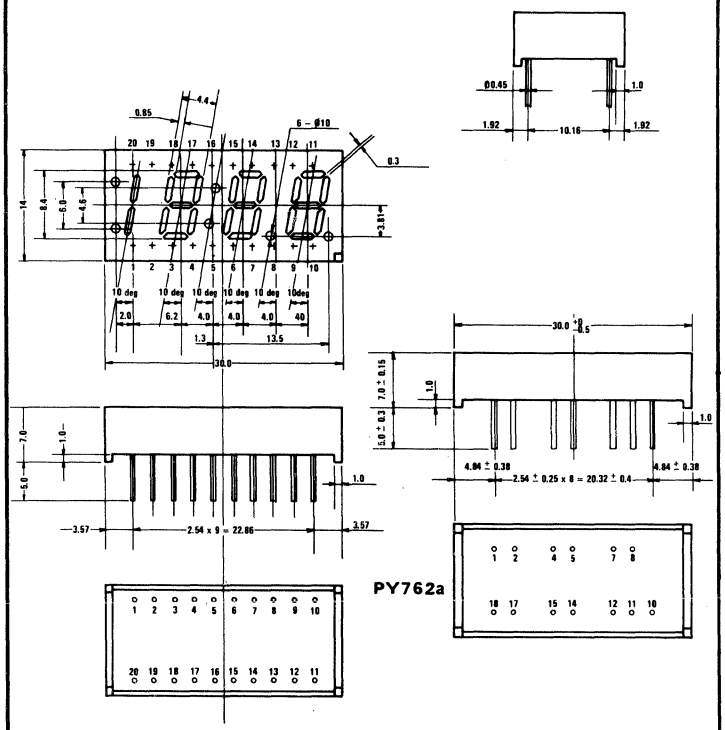

PY763

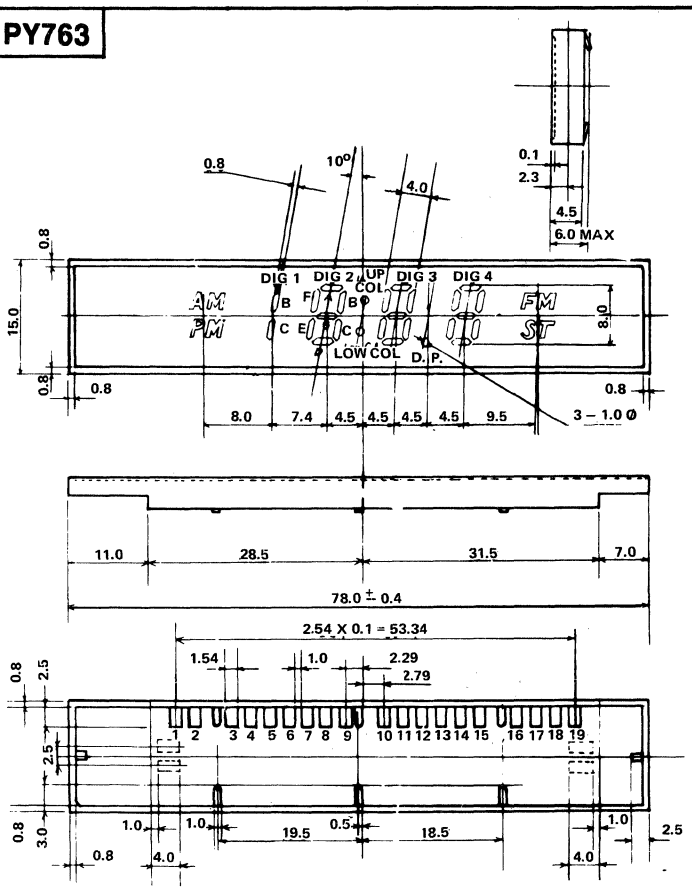

49. OUTLINE DRAWINGS

PY764

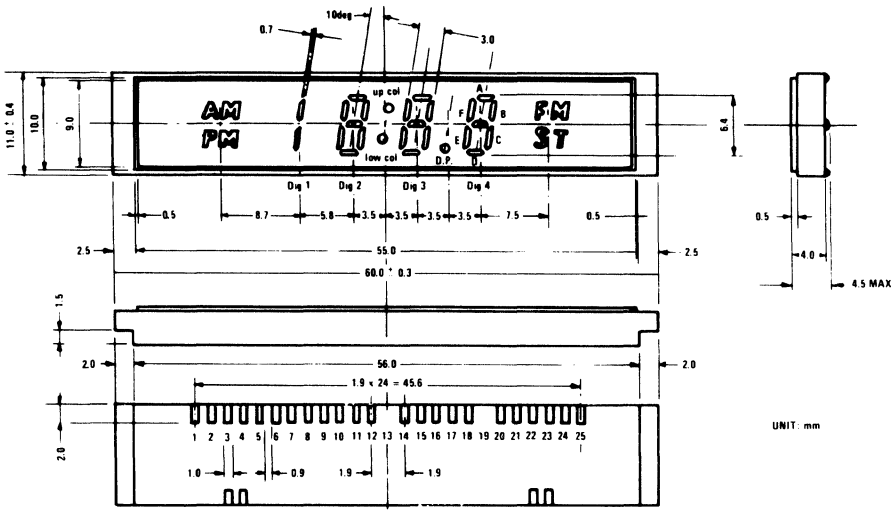

PY765

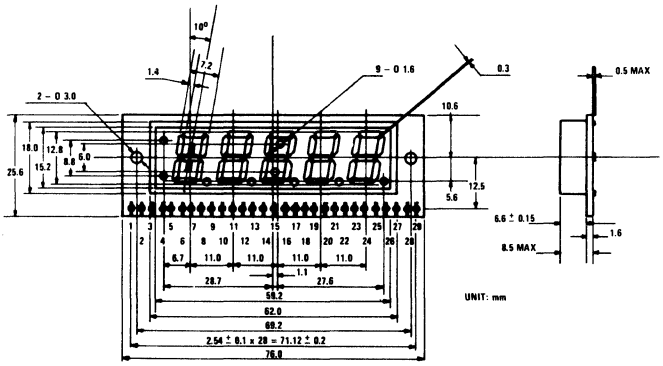

PY766

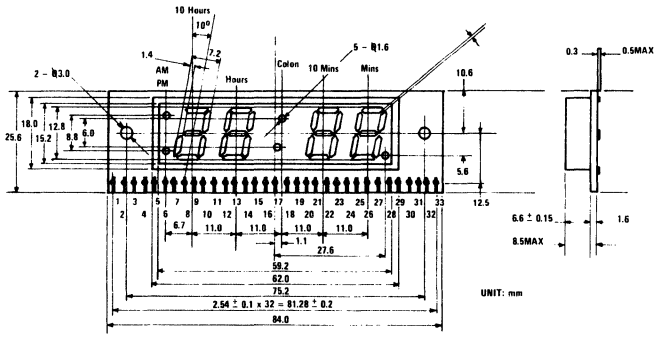

PY768

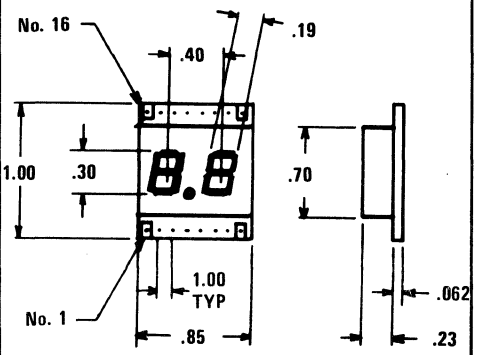

PY769

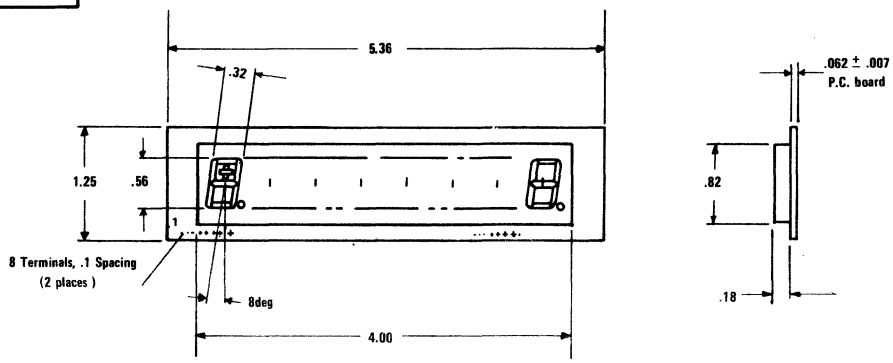

49. OUTLINE DRAWINGS

PY770

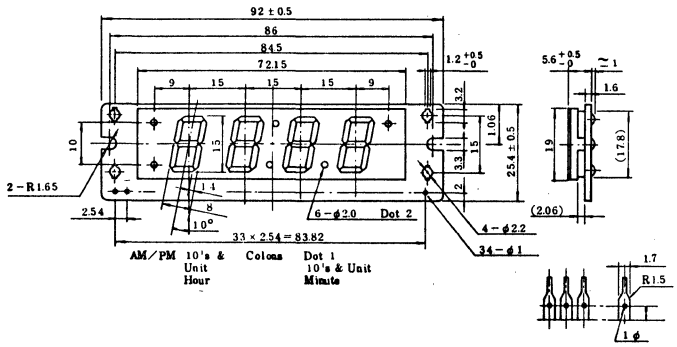

PY771

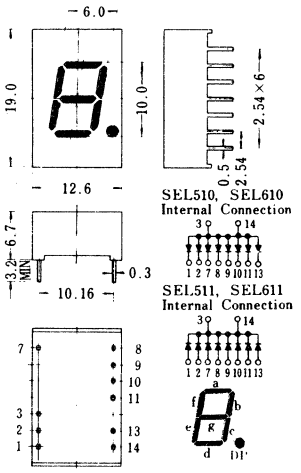

Terminal Assignment

Pin number	1	2	3	7	8	9	10	11	13	14
Segment	a	f	A	e	d	DP	c	g	b	A

A is common terminal

PY772

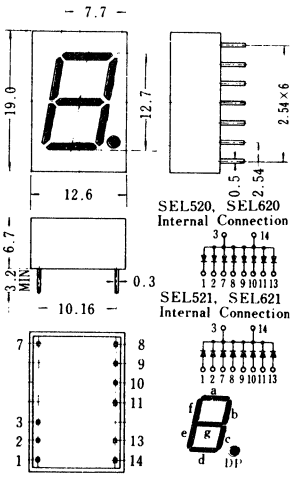

Terminal Assignment

Pin number	1	2	3	7	8	9	10	11	13	14
Segment	a	f	A	e	d	DP	c	g	b	A

A is common terminal

PY775

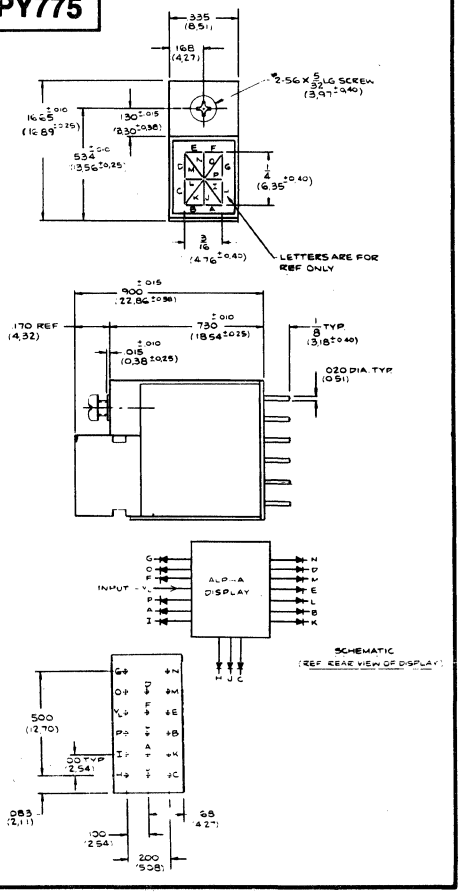

PY776

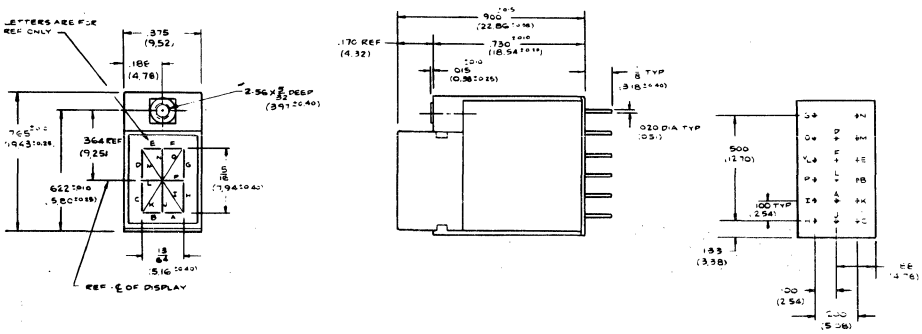

49. OUTLINE DRAWINGS

PY782

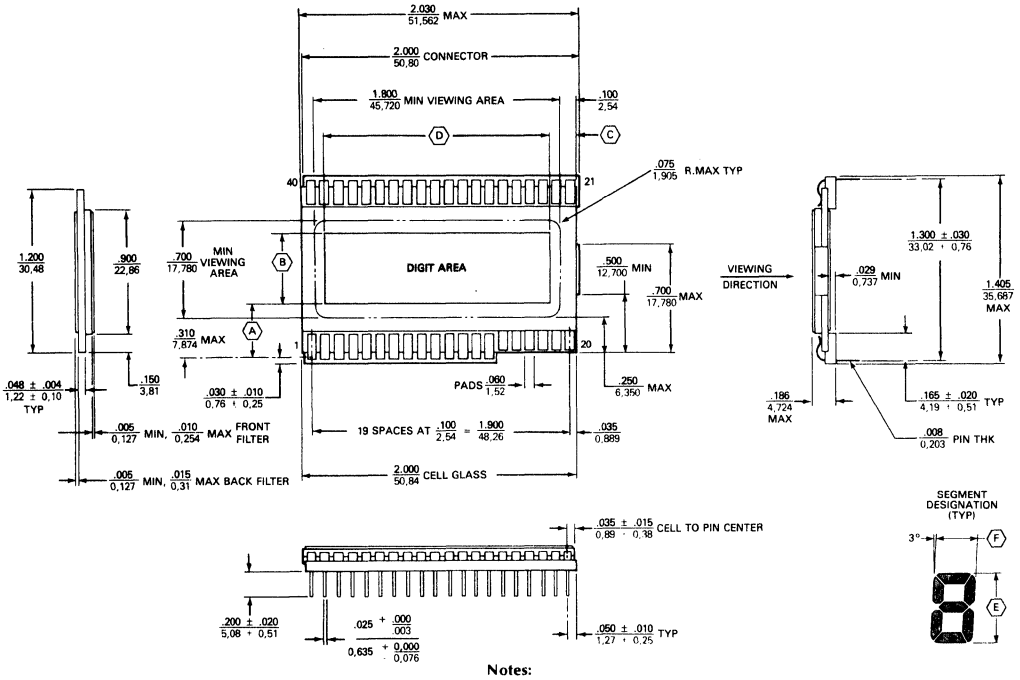

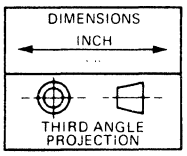

Tolerances unless otherwise specified: ± .005 inch and ± [illegible] angular ± 2°

Metric equivalents — based upon [illegible] unless otherwise shown, are provided for general information only.

Notes:
Dimension Exceptions For Outline Drawings

Reference	Dimension	Display
A	.350 .400 .400 ± .020 .450 ± .020	-2, -3, -4 -5 -52, -53, -54 -55
B	.550 .500 .450	-2, -52 -3, -4, -53, -54 -5, -55
C	.185 .170 .200 .180 .200	-2, -3 -4 -5 -52, -53, -54 -55
D	1.635 1.650 1.600	-2, -3, -52, -53 -4, -54 -5, -55
E	.500 .400	-2, -3, -4, -52, -53, -54 -5, -55
F	.290 .210	-2, -3, -4, -52, -53, -54 -5, -55

PY783

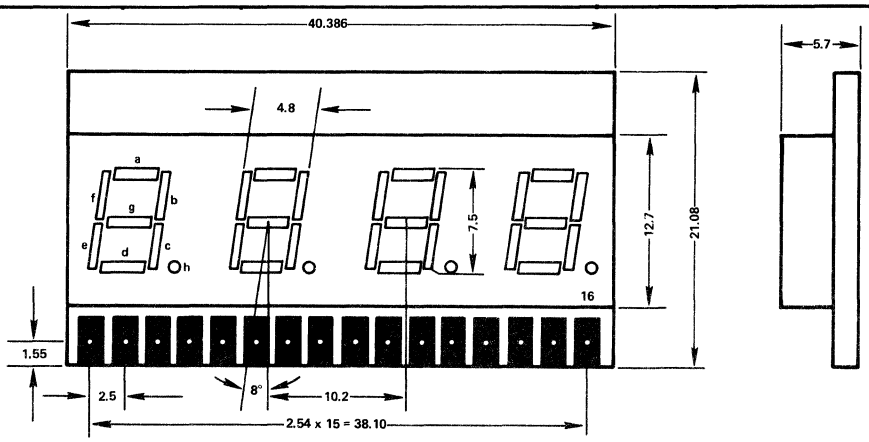

49. OUTLINE DRAWINGS

PY785

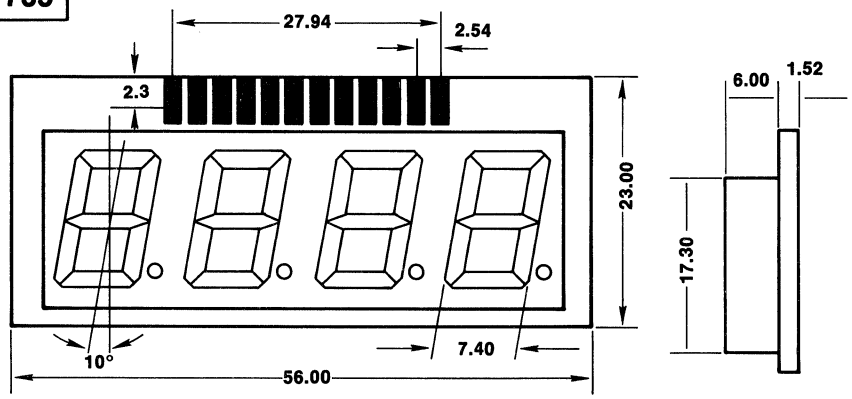

PY758

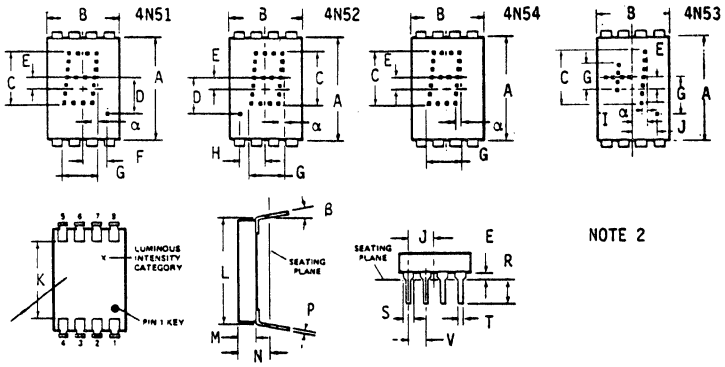

SYM	DIMENSIONS Millimeters Min	Millimeters Max	Note	Inches Min	Inches Max
A	13.12	13.88		.515	.545
B	9.44	10.20		.370	.400
C	7.02	7.78		.275	.305
D	5.22	5.98		.205	.235
E	1.12	1.88		.045	.075
F	2.62	3.38		.105	.135
G	4.42	5.18		.175	.205
H	3.22	3.98		.125	.155
I	1.52	2.28		.060	.090
J	3.42	4.18		.135	.165
K	9.82	10.58		.385	.415
L	14.82	15.58		.585	.615
M	2.42	3.18		.095	.125
N	3.92	4.68		.155	.185
P	.22	.38	1	.009	.015
R	3.02	3.78		.120	.150
S	.92	1.68	1	.035	.065
T	.42	.58	1	.017	.023
V	2.37	2.63	1	.095	.105
α	4°	6°		4°	6°
β	0°	10°		0°	10°

NOTES:

1. All Leads
2. Package is hermetically sealed

PY797

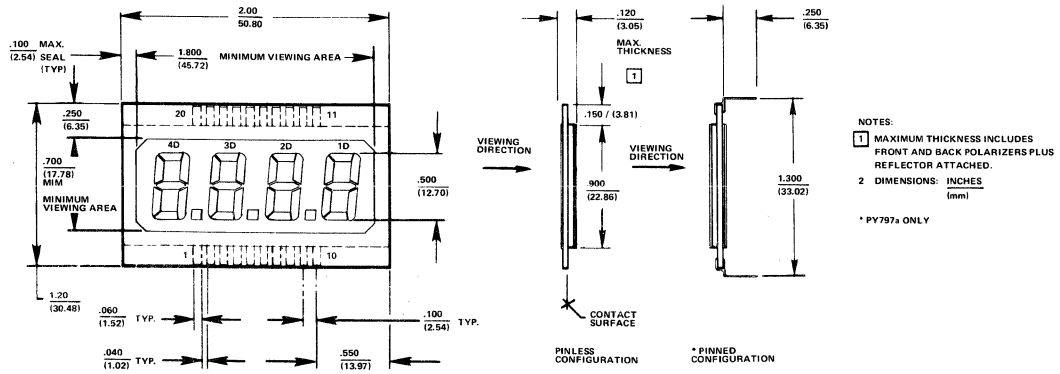

49. OUTLINE DRAWINGS

PY798

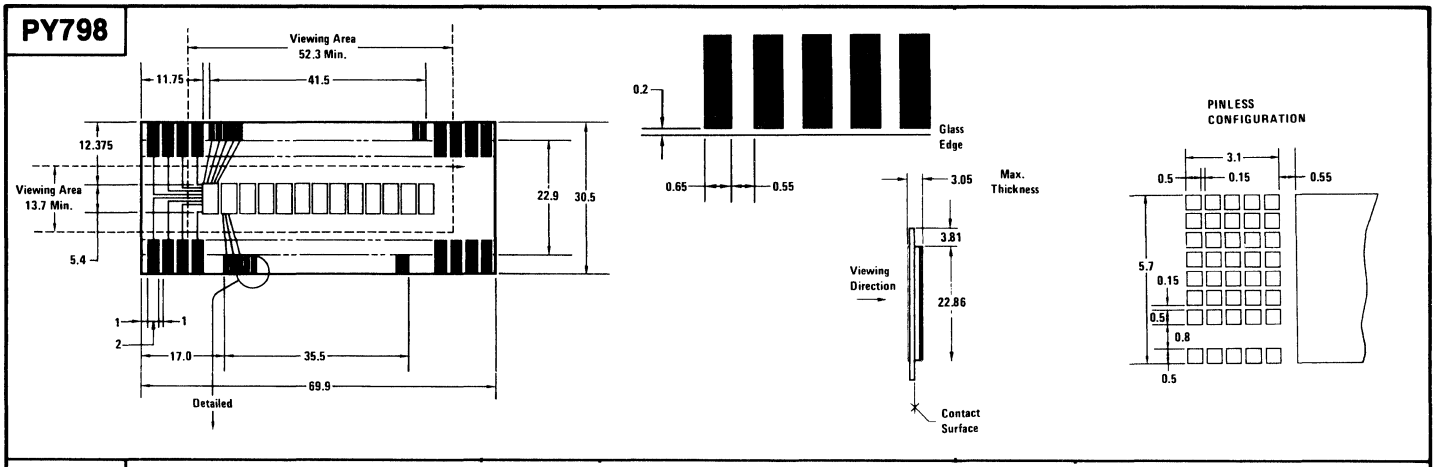

PY799

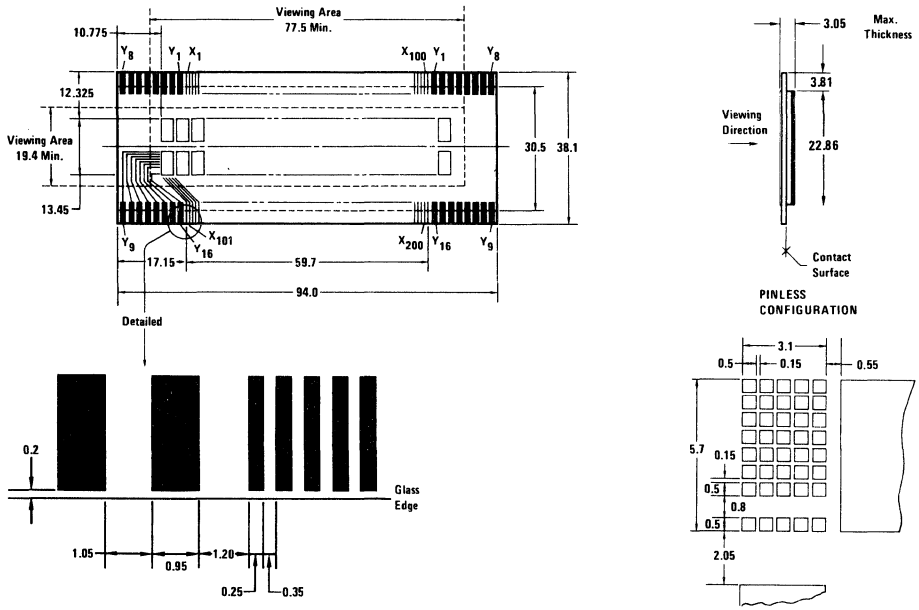

PY804

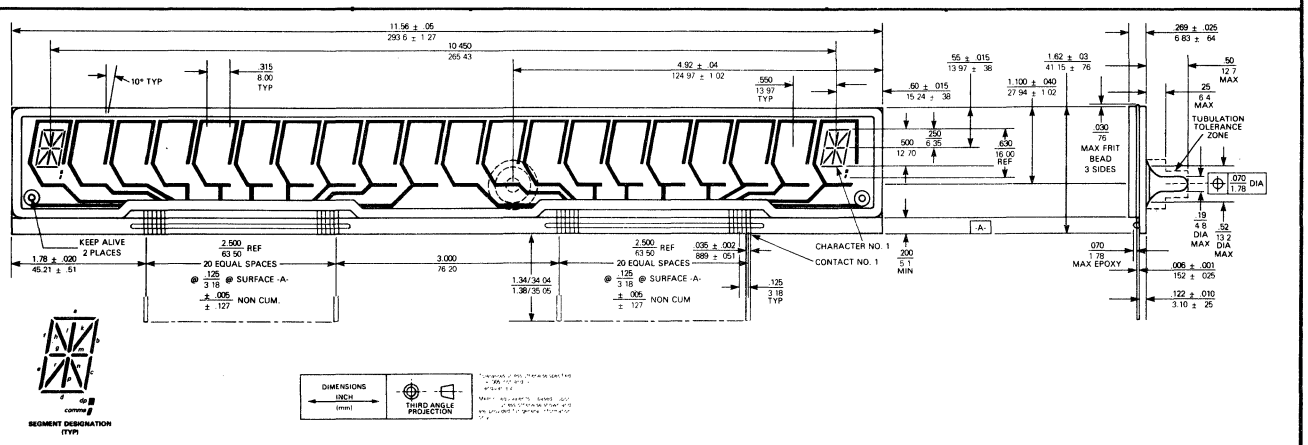

49. OUTLINE DRAWINGS

PY780

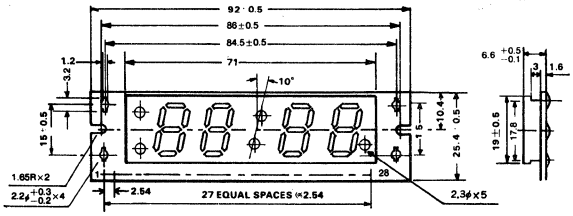

PY806

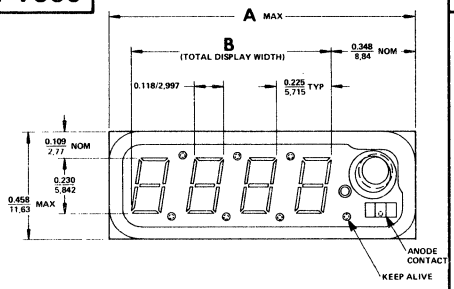

	A	B	#of Digits
PY806	1.275	0.829	4
PY806a	1.500	1.054	5

PY807

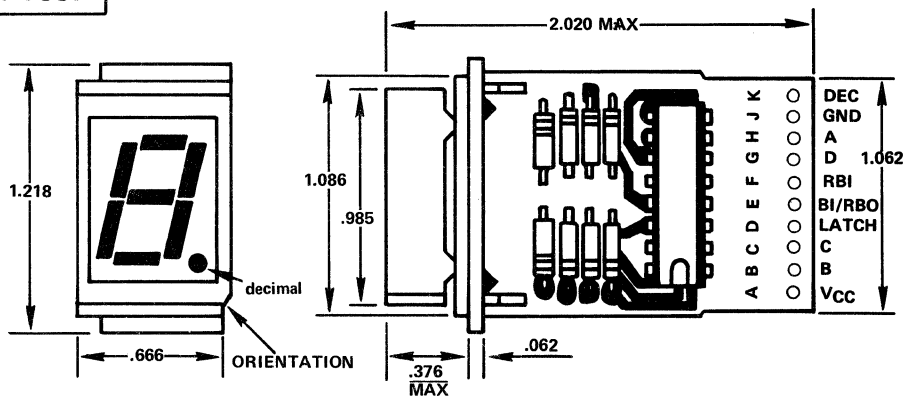

PY810

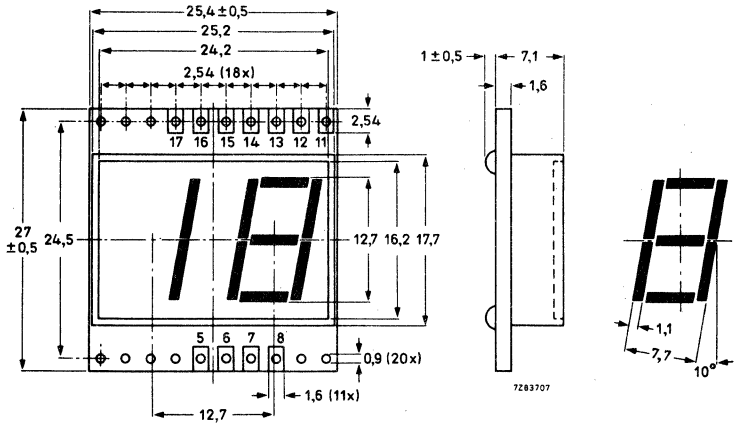

PY812

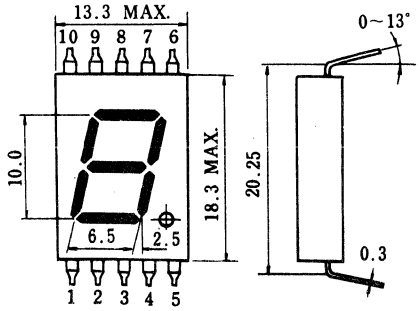

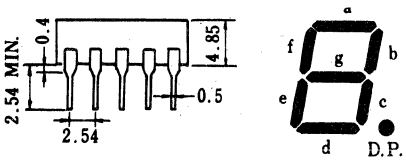

端子接続／CONNECTION DIAGRAM

1．e	6．b
2．d	7．g
3．c	8．a
4．共通カソード	9．共通カソード
5．D.P.	10．f

4pinと9pinは内部で接続されております。

PY813

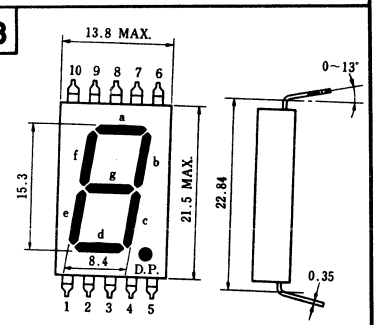

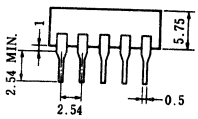

49. OUTLINE DRAWINGS

PY814

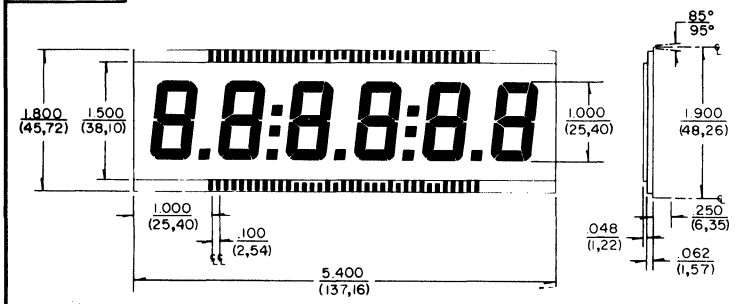

PY815

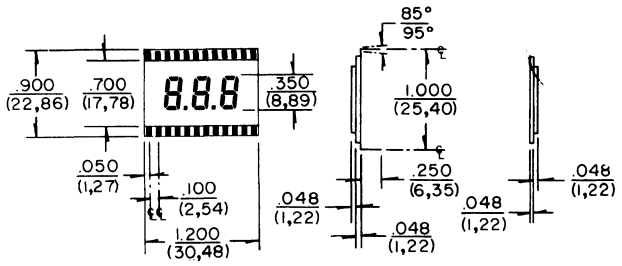

PY817

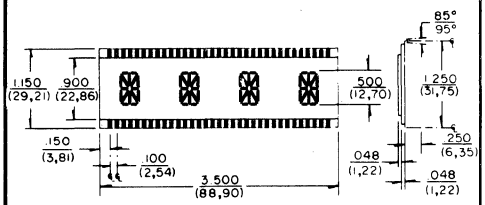

PY822

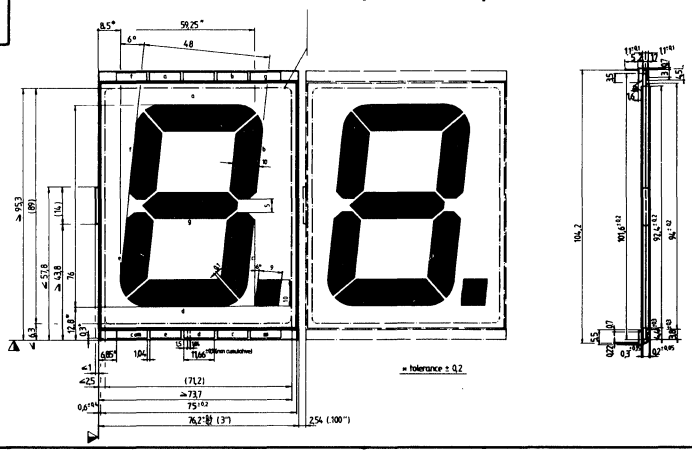

PY826

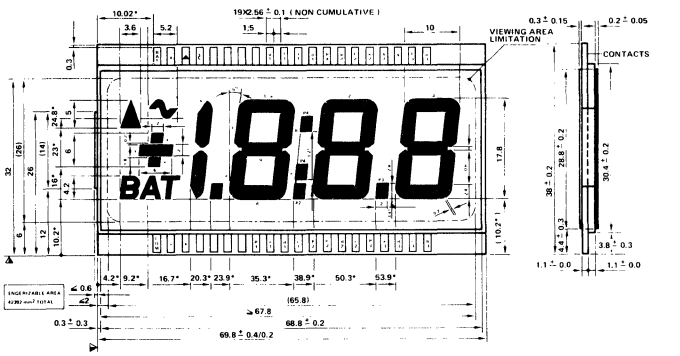

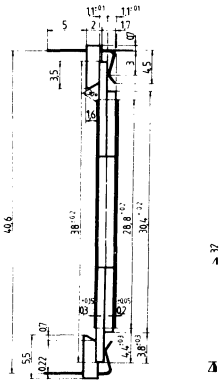

PY826a

PY828

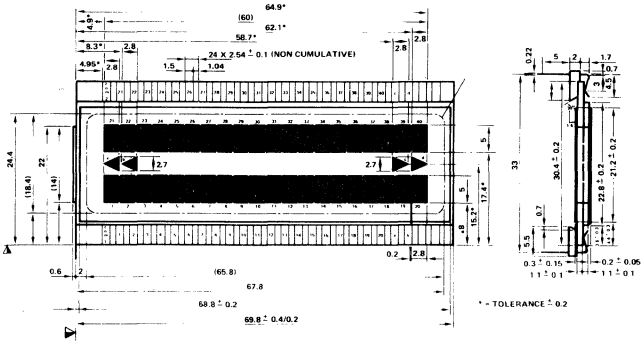

49. OUTLINE DRAWINGS

PY829

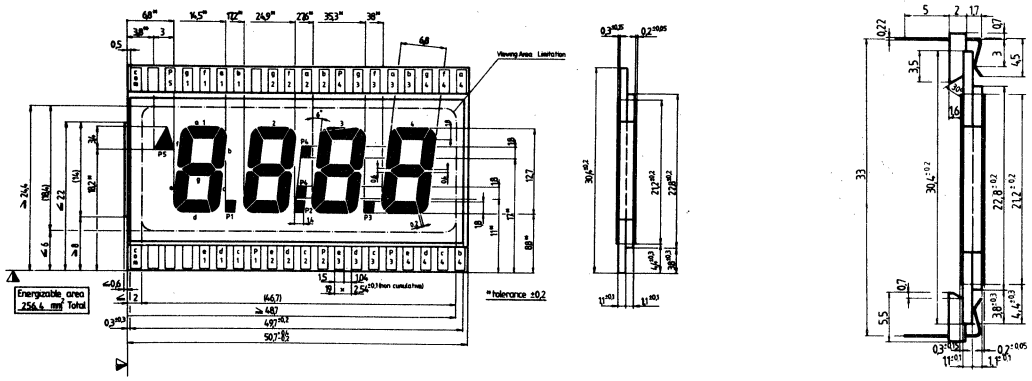

PY829a

PY830

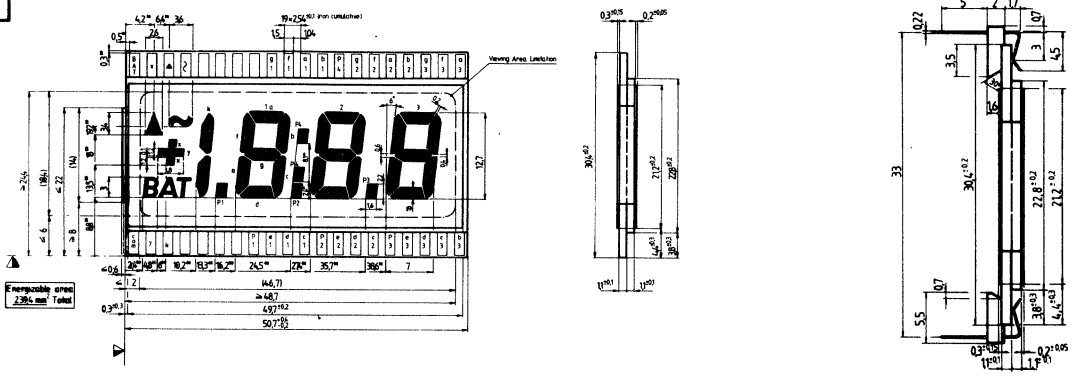

PY830a

PY831

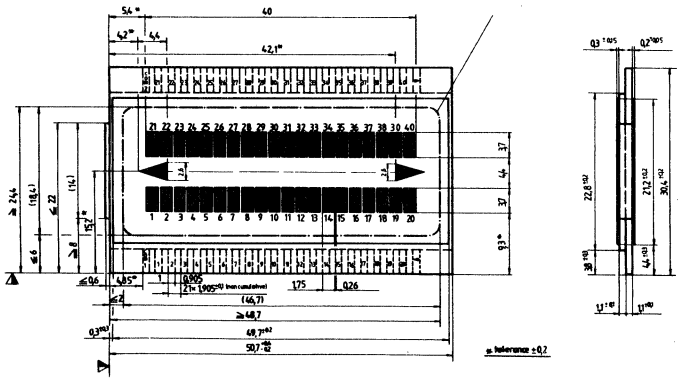

PY832

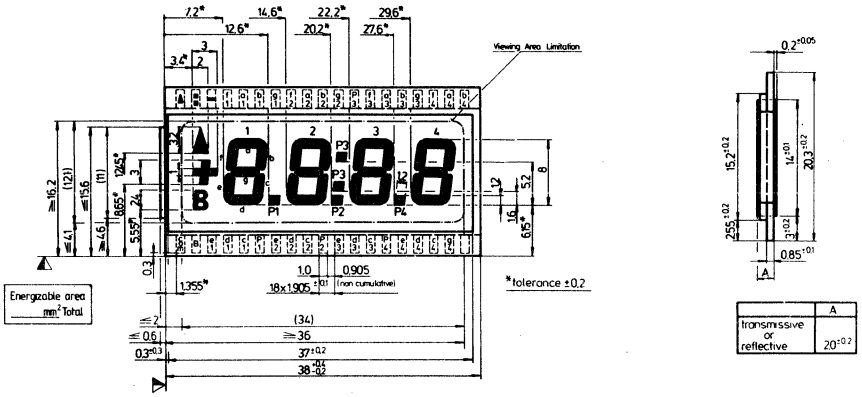

	A
transmissive or reflective	20

49. OUTLINE DRAWINGS

PY840

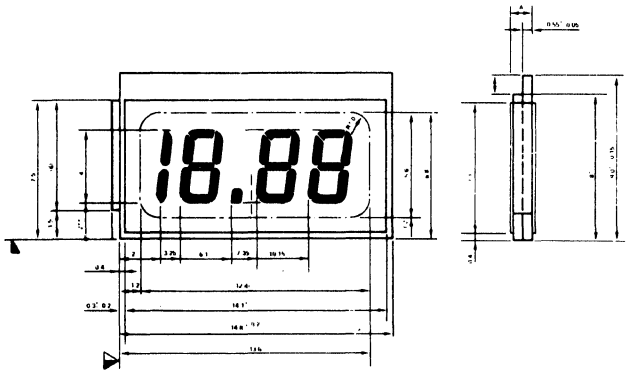

PY851

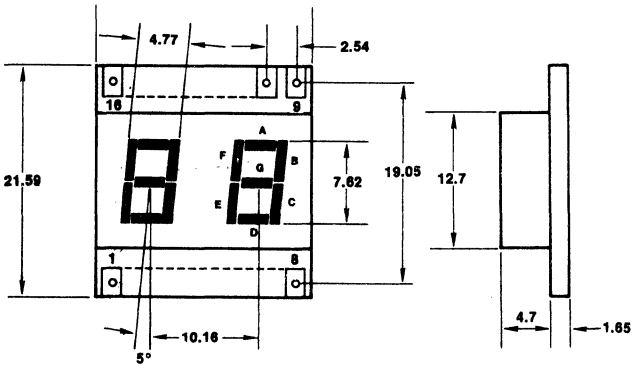

PY854

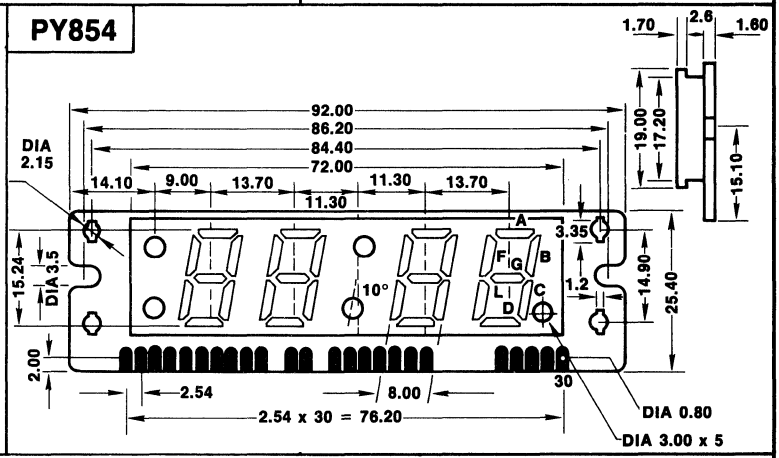

PY855

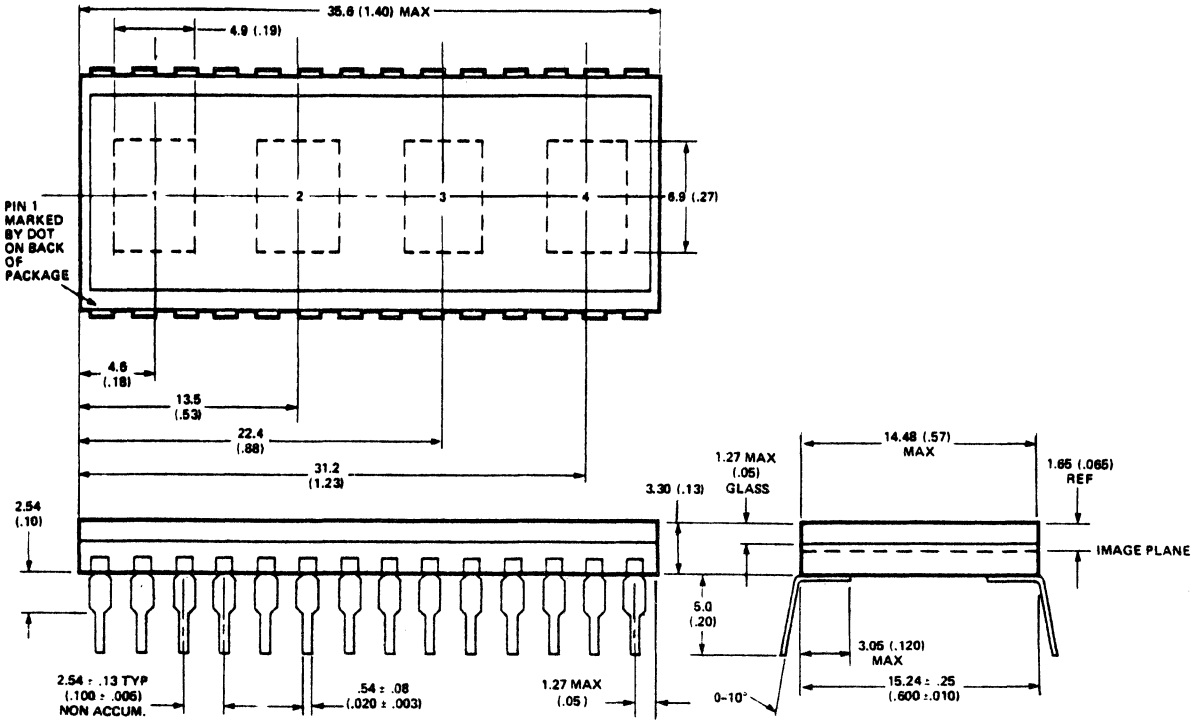

49. OUTLINE DRAWINGS

PY869

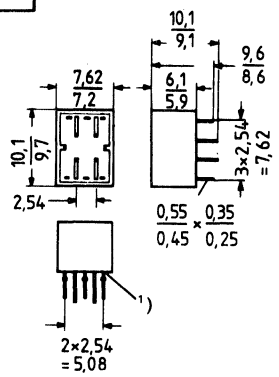

PY870

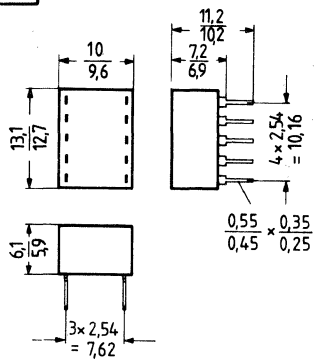

PY872

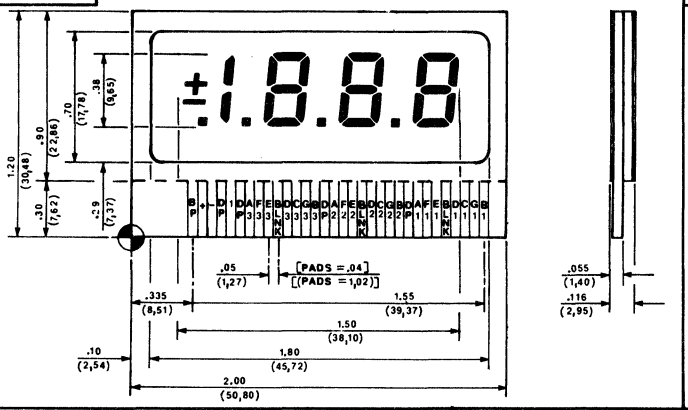

PY873

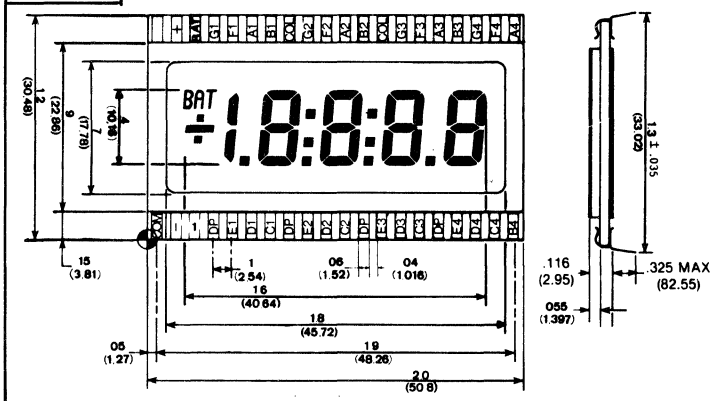

PY874

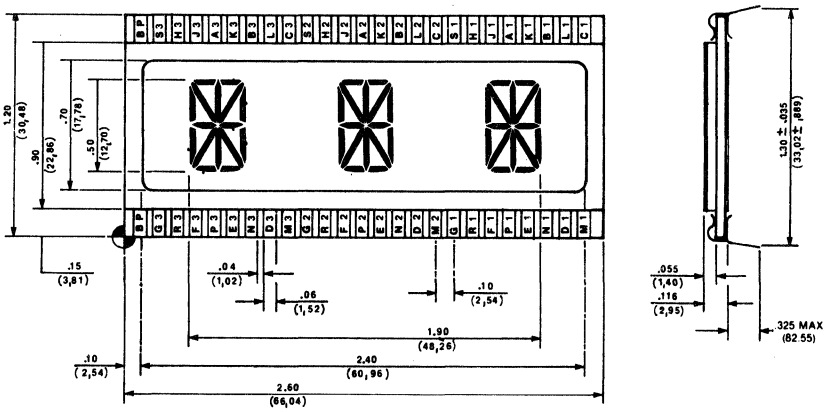

PY875

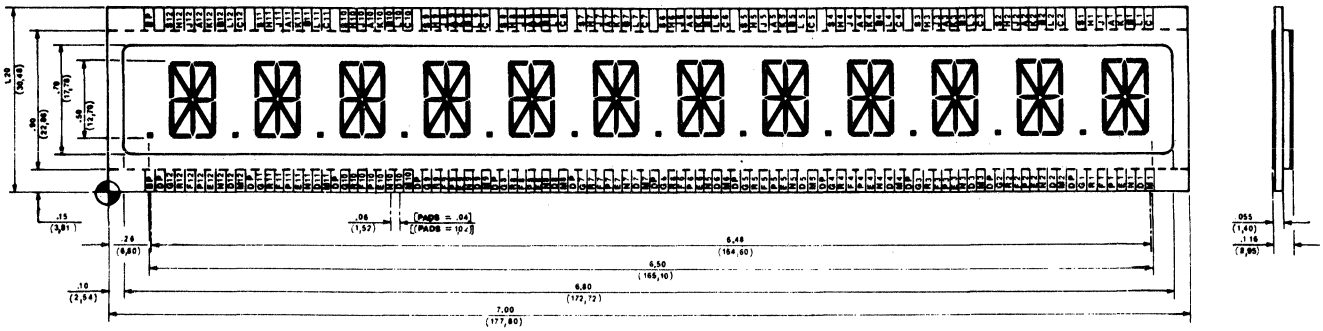

49. OUTLINE DRAWINGS

PY876

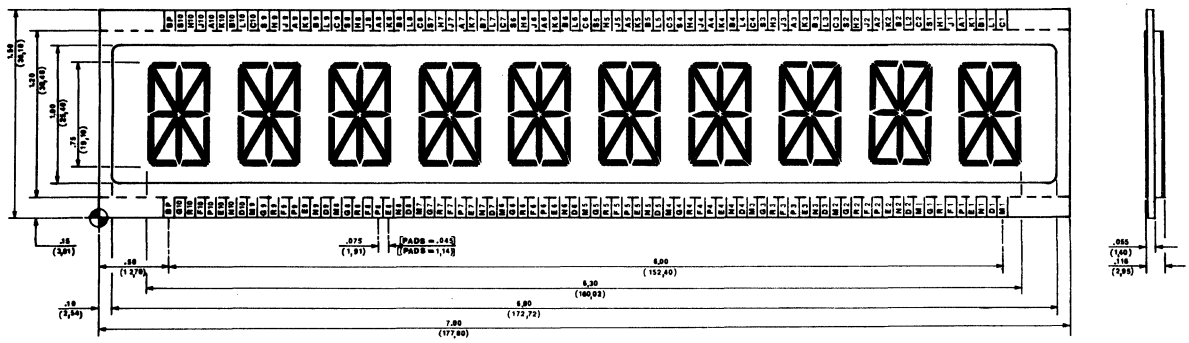

PY877

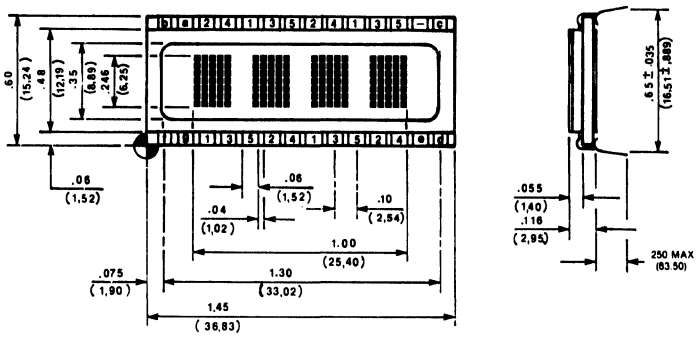

NOTE: 4 Character Matrix
Matrix dots are .03" (.762) Sq. w/ .006" (.152) spaces

PY878

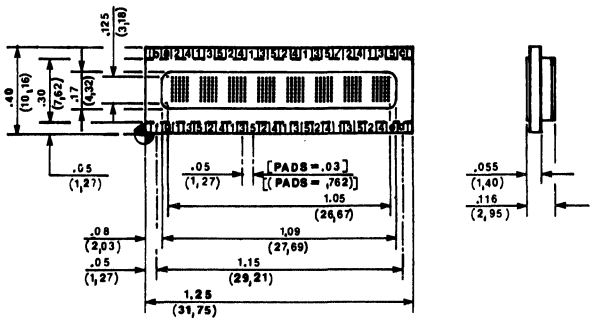

NOTE: 8 Character Matrix
Matrix dots are .015" (,381) Sq. w/ .006" (,152) spaces

PY879

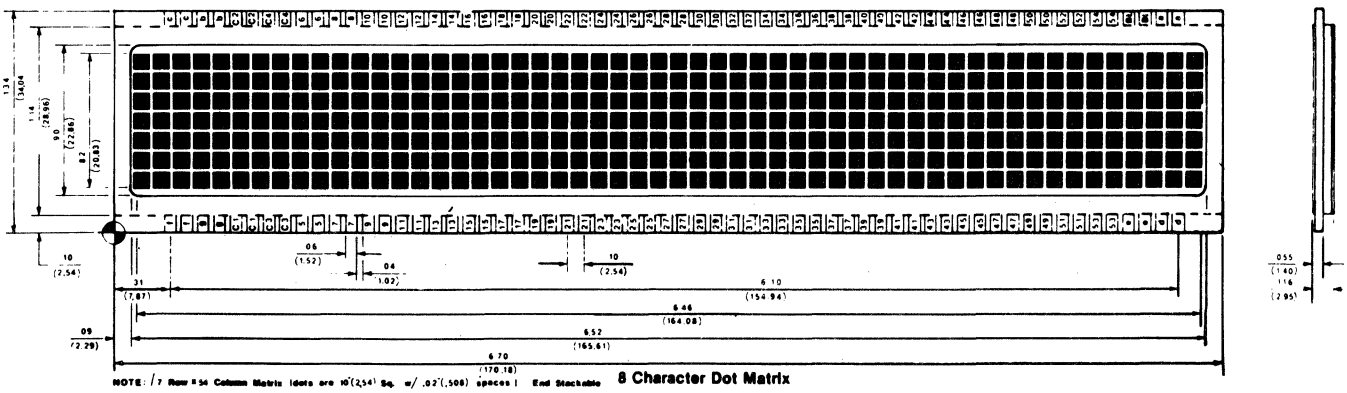

NOTE: (7 Row × 54 Column Matrix (dots are .10" (2,54) Sq. w/ .02" (,508) spaces) End Stackable

8 Character Dot Matrix

49. OUTLINE DRAWINGS

PY880

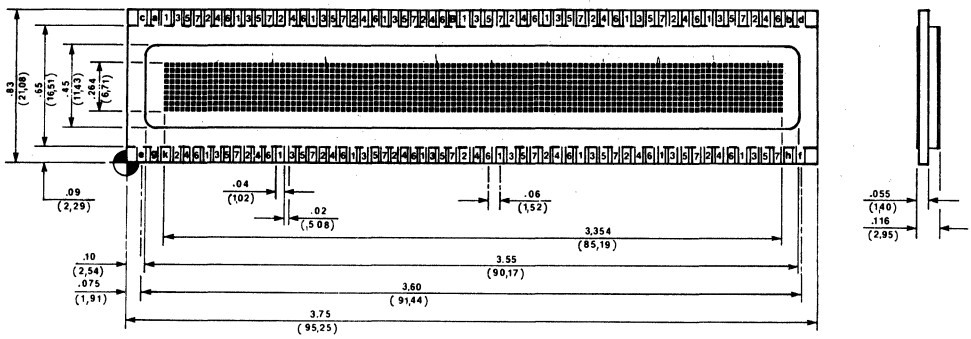

NOTE: Dimensions are in inches (millimeters)
9 Row x 112 Column Matrix [dots are .024" (,61) Sq. w/ .006 (,152) spaces]
16 Character Dot Matrix

PY881

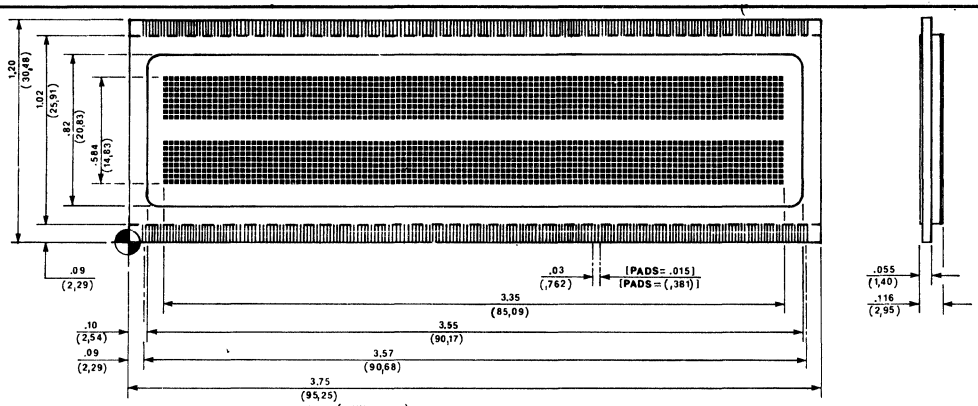

NOTE: Dimensions are in inches (millimeters)
Dual 8 Row x 112 Column Matrix [dots are .024"(,61) Sq. w/ .006"(,152) spaces]
Dual 16 Character Dot Matrix

PY882

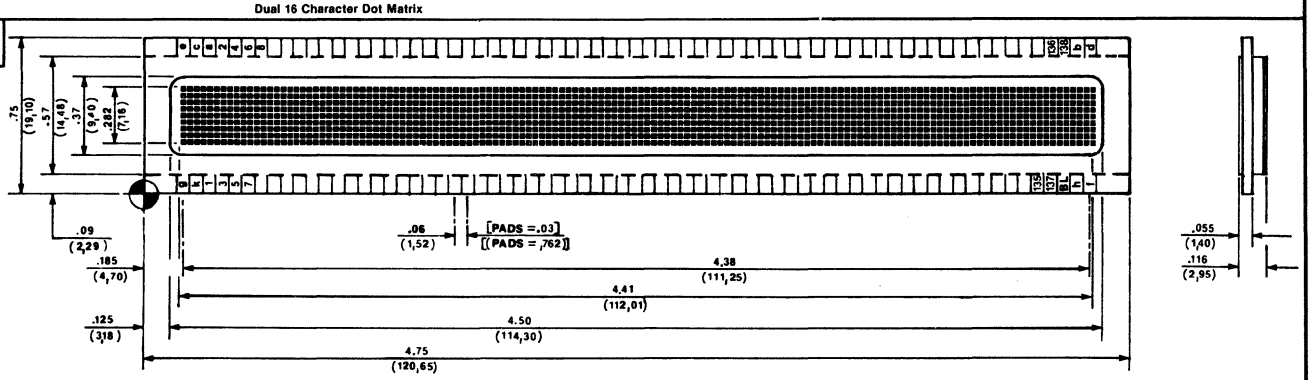

NOTE: Dimensions are in inches (millimeters)
9 Row x 138 Column Matrix [Dots are .026"(,660) Sq. w/ .006" (,152) spaces]
20 Character Dot Matrix

PY883

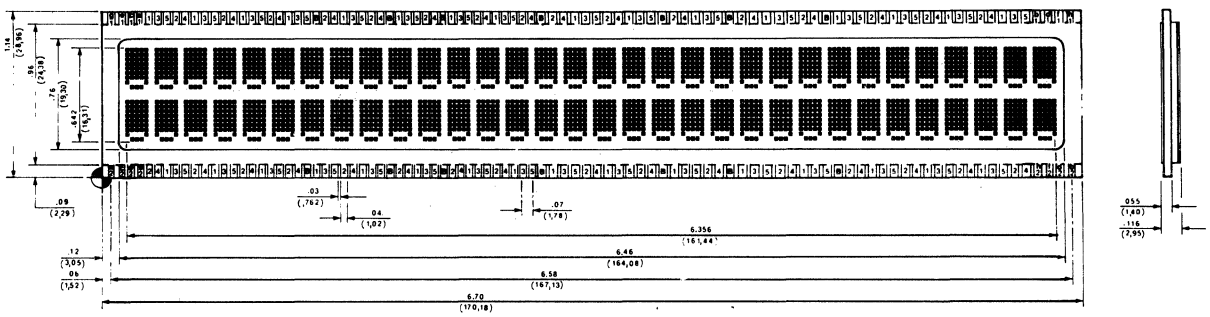

NOTE: Dimensions are in inches (millimeters)
Dual 32 Character Matrix in 5 x 7 format w/ Row 8 & Row 9 common (160 Columns - 16 Back Planes)
Matrix dots are .026 (,660) Sq. w/ .006 (,152) spaces
Dual 32 Character Dot Matrix

49. OUTLINE DRAWINGS

PY884

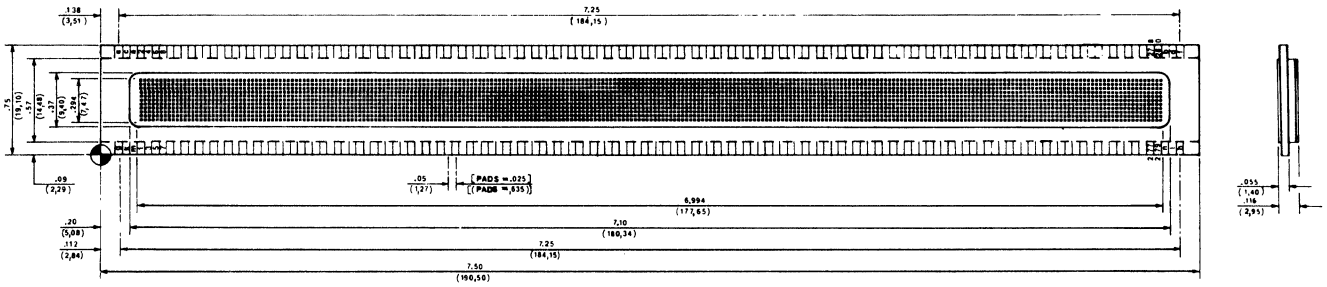

NOTE: 12 Row x 200 Column Matrix [dots are .019" (,483) Sq. w/ .006" (,152) spaces]

40 Character Dot Matrix

PY885

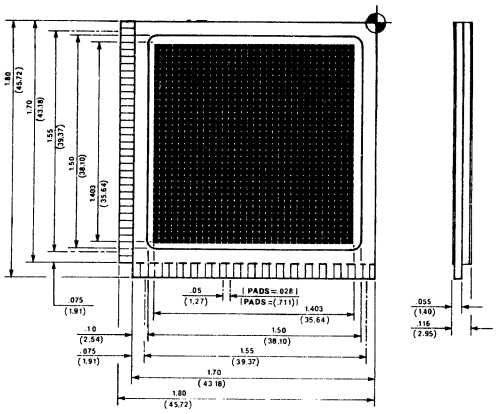

NOTE: Dimensions are in inches (millimeters)
32 Row x 32 Column Matrix
Matrix dots are .039"(.991) Sq. w/ .005"(.127) spaces

PY886

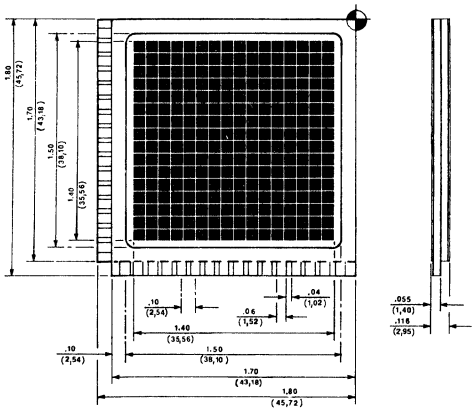

NOTE: Dimensions are in inches (millimeters)
16 Row x 16 Column Matrix
Matrix dots are .08" (,203) Sq. w/ .008" (,203) spaces

PY887

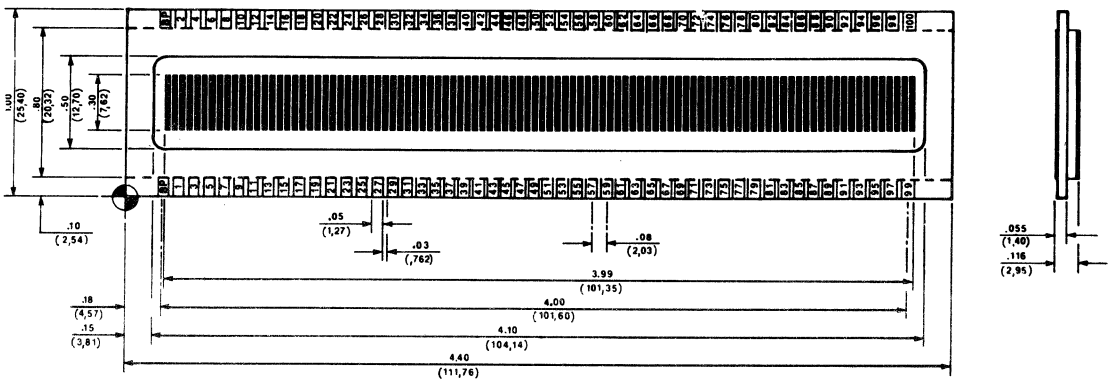

NOTE: 100 Segment Bargraph [bars are .30" x .03" (7,62 x ,762) w/ .01" (,254) spaces]

49. OUTLINE DRAWINGS

PY889

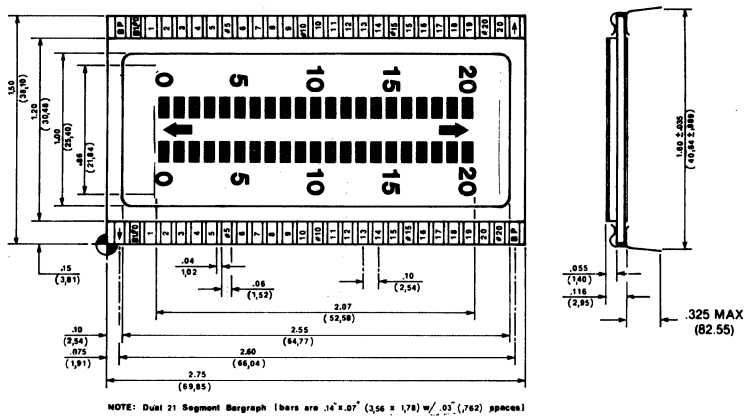

PY890

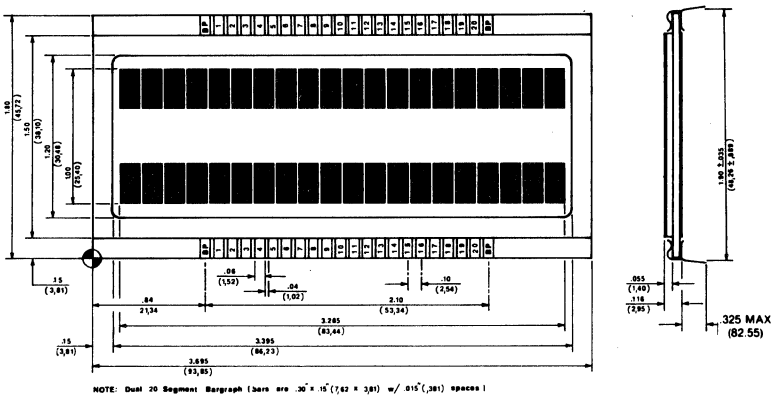

PY892

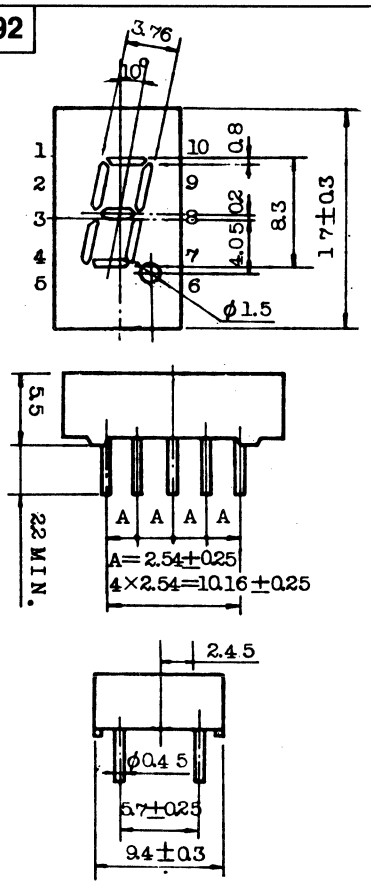

PY895

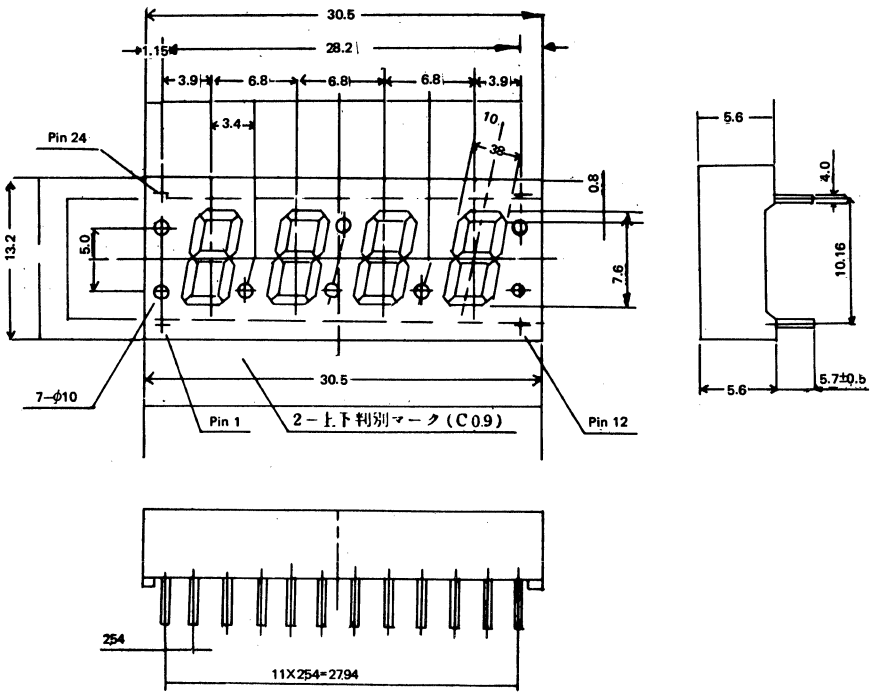

49. OUTLINE DRAWINGS

PY899

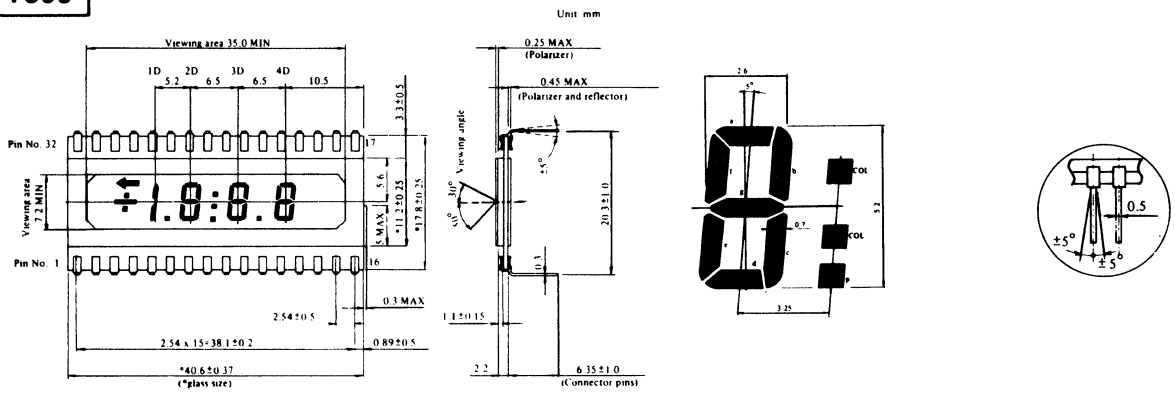

PY900

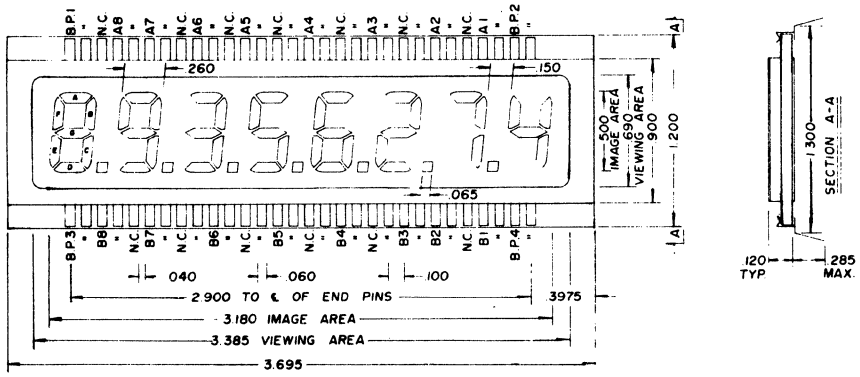

PY901

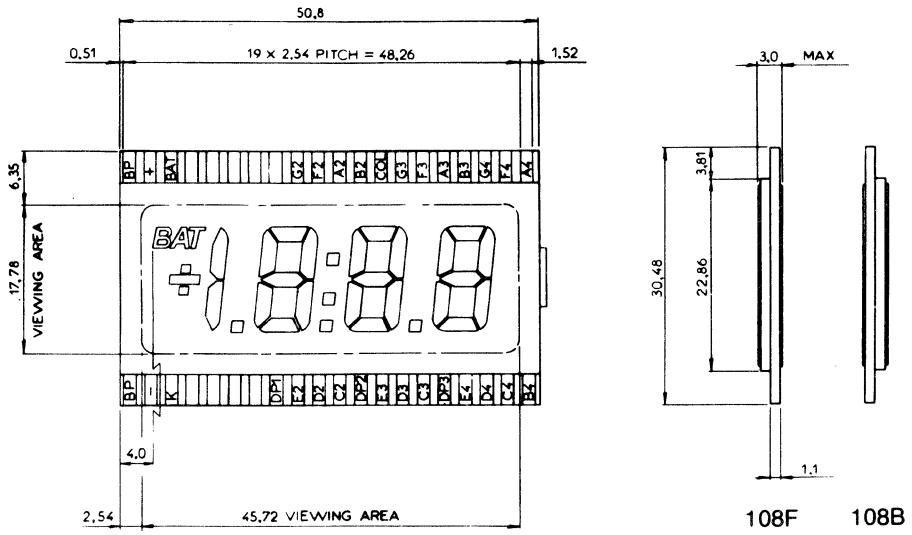

49. OUTLINE DRAWINGS

PY902

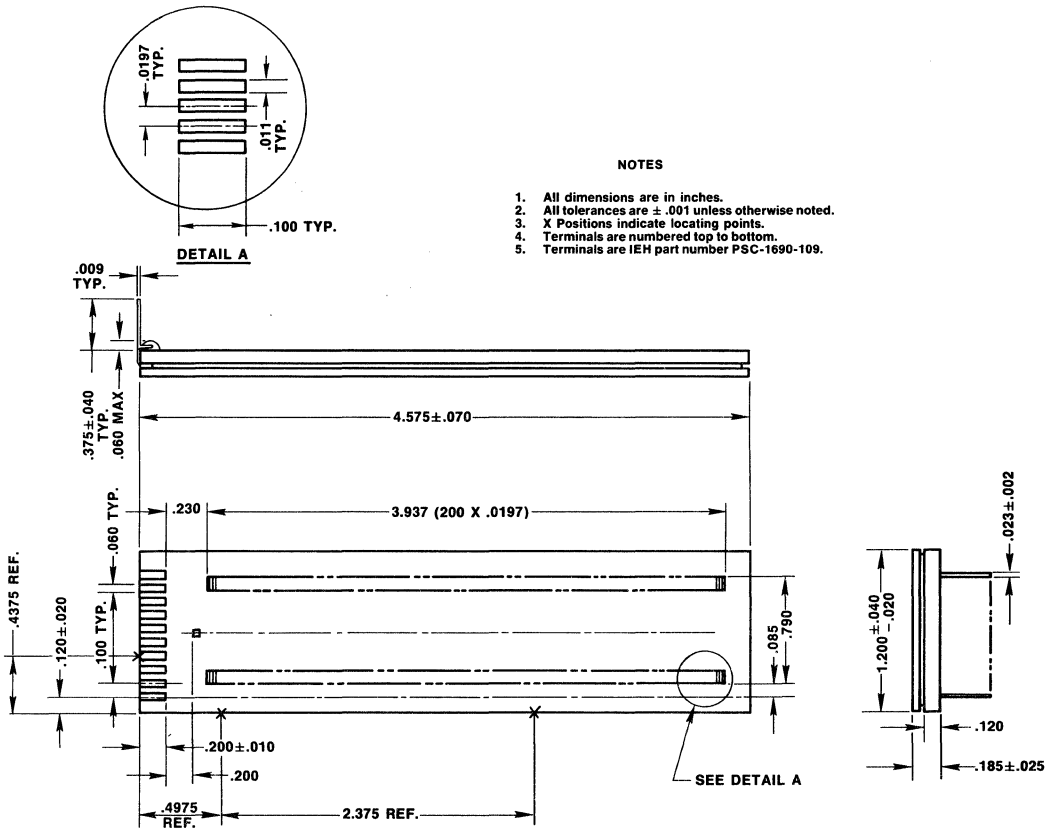

NOTES

1. All dimensions are in inches.
2. All tolerances are ± .001 unless otherwise noted.
3. X Positions indicate locating points.
4. Terminals are numbered top to bottom.
5. Terminals are IEH part number PSC-1690-109.

PY903

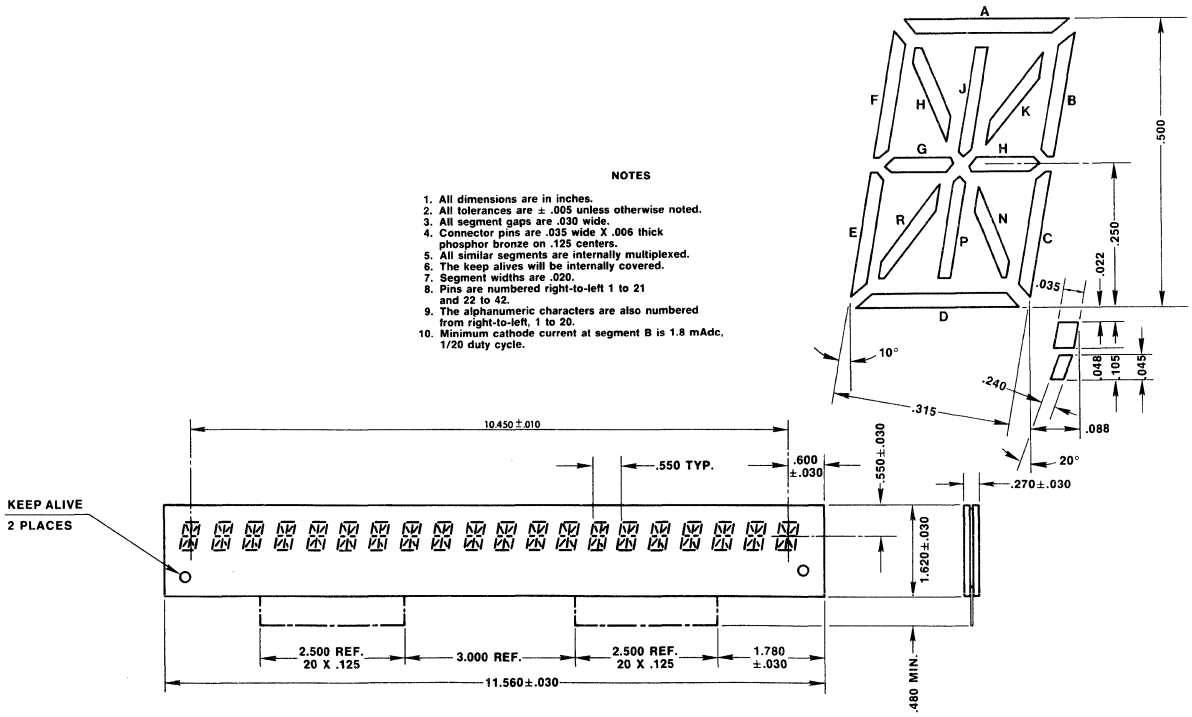

NOTES

1. All dimensions are in inches.
2. All tolerances are ± .005 unless otherwise noted.
3. All segment gaps are .030 wide.
4. Connector pins are .035 wide X .006 thick phosphor bronze on .125 centers.
5. All similar segments are internally multiplexed.
6. The keep alives will be internally covered.
7. Segment widths are .020.
8. Pins are numbered right-to-left 1 to 21 and 22 to 42.
9. The alphanumeric characters are also numbered from right-to-left, 1 to 20.
10. Minimum cathode current at segment B is 1.8 mAdc, 1/20 duty cycle.

49. OUTLINE DRAWINGS

PY904

NOTES

1. All dimensional tolerances are ± .005 unless otherwise noted.
2. All dimensions are in inches.
3. All connector pads are .050 wide X .250 long and on .125 centers.
4. Pins are .006 X .035 phospor bronze.
5. Both keep-alives will be internally covered.
6. Both keep-alives are .025 X .100.
7. Dimenssion "A" can be specified as
   .145 ± .020
   .205 ± .020
   .270 ± .020
8. The plug opening will be centered on the bottom of the display.
9. Pins are numbered 1 to 39 from right to left.
10. Digits are numbered 1 to 7 from right to left.
11. NC means no connection.

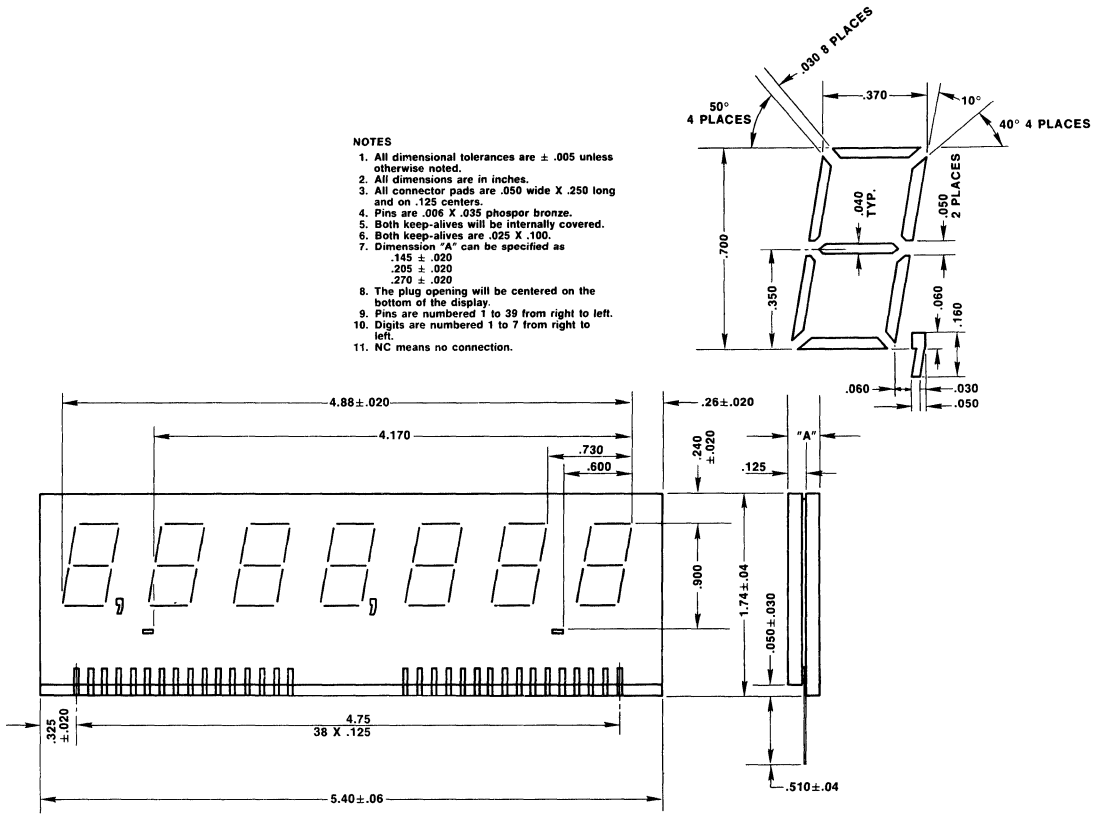

PY905

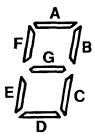

NOTES:

1. All dimensions are in inches;
2. All dimensional tolerances are ± .010 unless otherwise noted;
3. All segment widths of the digits are .040 wide;
4. Pins are numbered from right to left;
5. On the pin-out NC means no connection;
6. The keep alives will be covered;
7. Connectors are to be flying lead type.

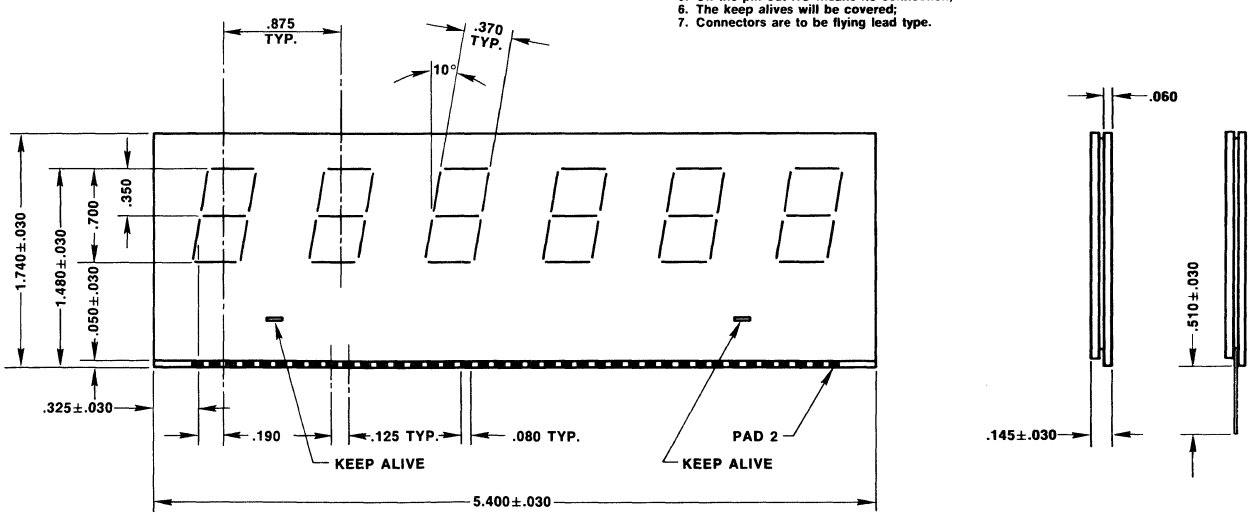

49. OUTLINE DRAWINGS

PY909

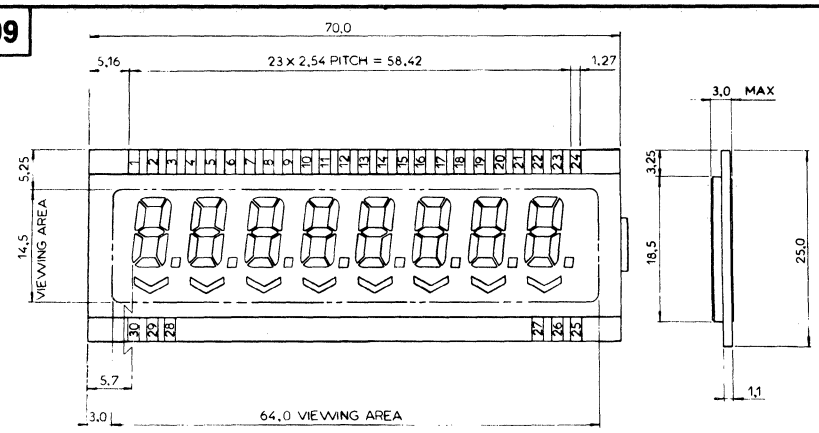

PY910

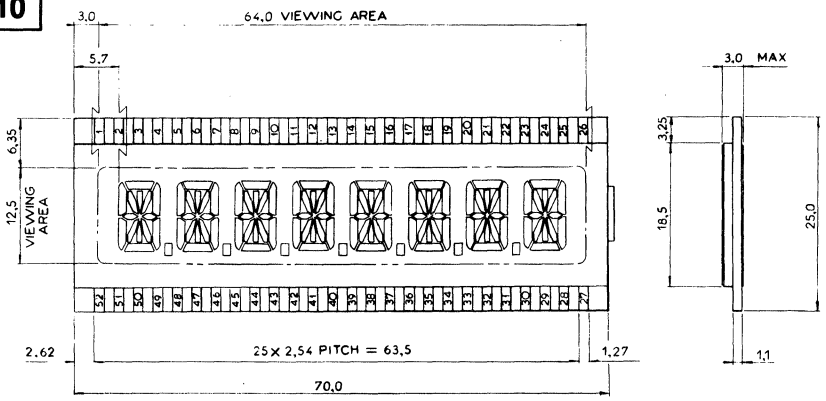

PY856

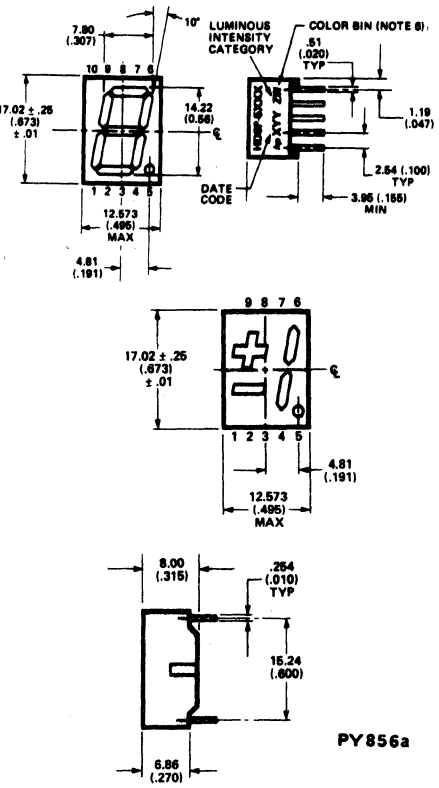

PY913

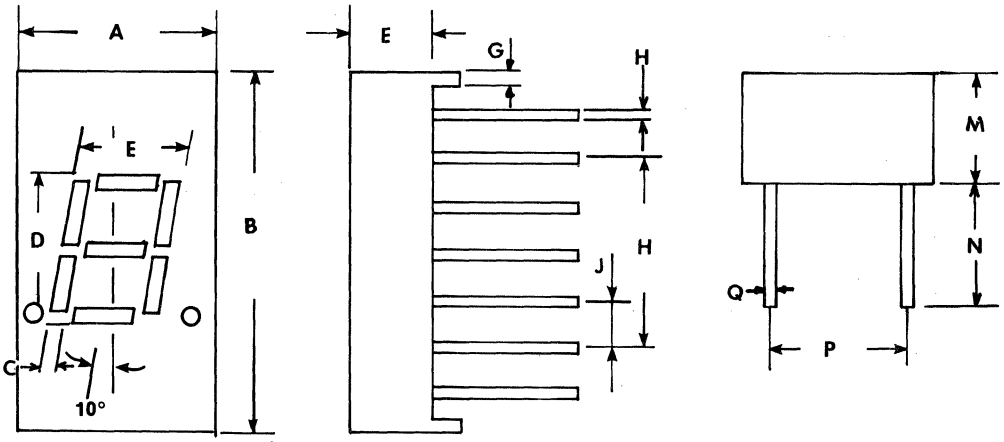

PY916

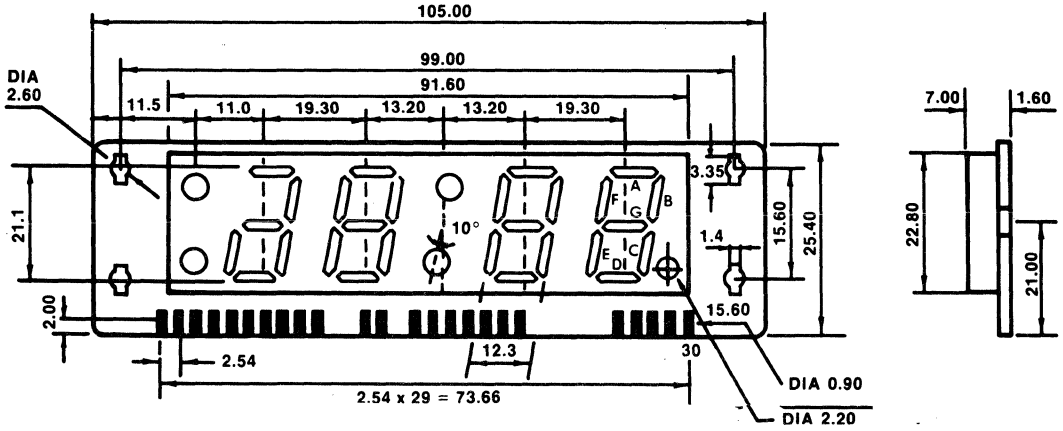

49. OUTLINE DRAWINGS

PY920

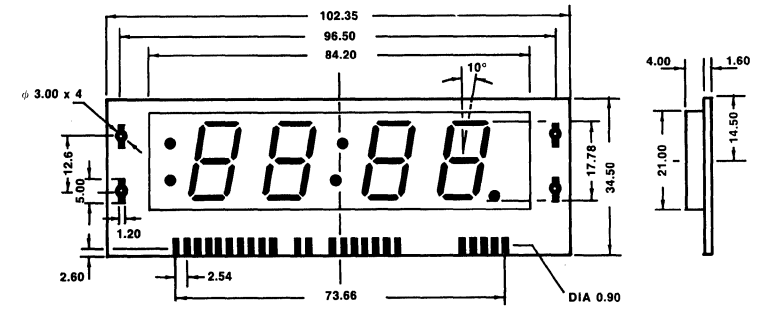

PY921

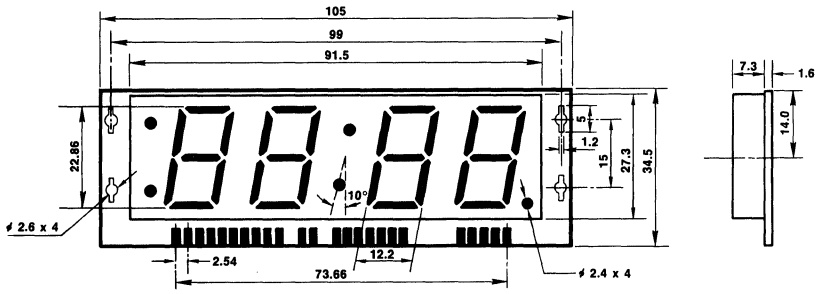

PY923

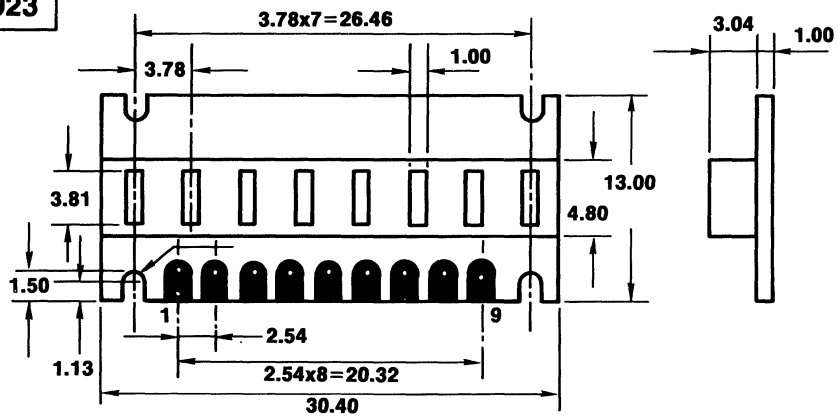

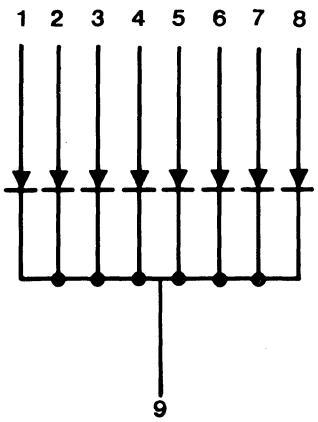

PY924

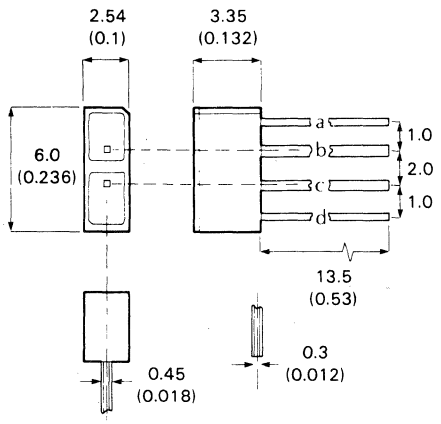

dimensions in mm (inches)

Pin Connections

a	Anode 1
b	Cathode 1
c	Cathode 2
d	Anode 2

49. OUTLINE DRAWINGS

PY906

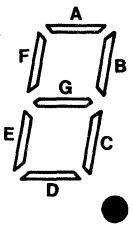

DETAIL 4/1

NOTES:

1. All dimensions are in inches;
2. All dimensional tolerances are ± .010 unless otherwise noted;
3. The width of the digit segments is .025;
4. Decimal size is .080 diameter;
5. Pins are numbered from right to left;
6. In the pin-out NC means no connection;
7. Connectors are the flying lead type (.035 x .006);
8. Plug hole opening to be at the top of the panel.

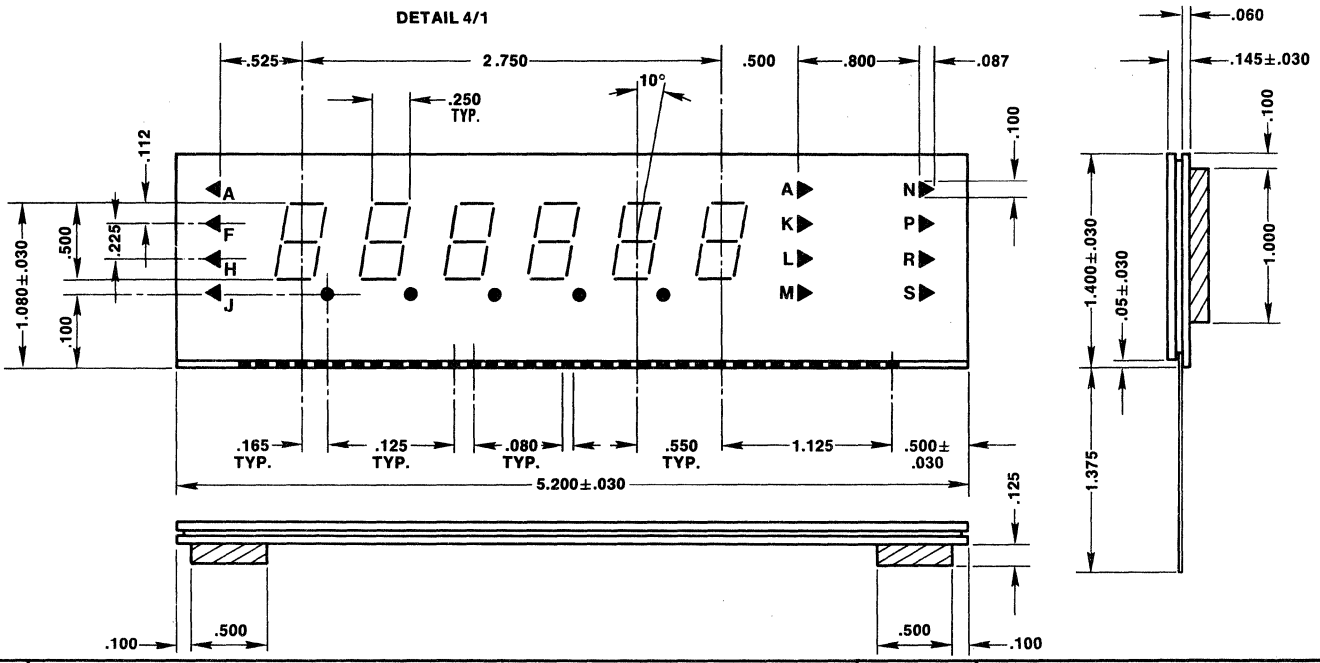

PY926

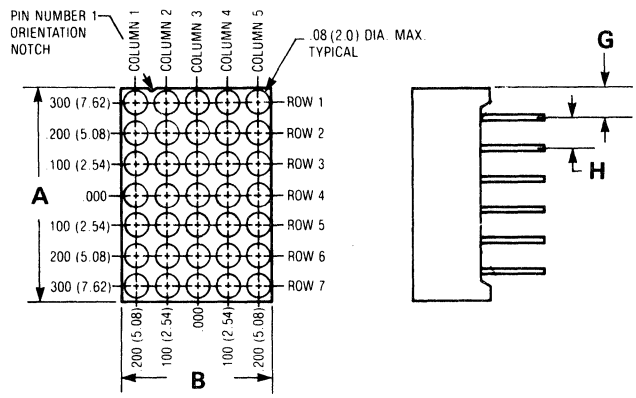

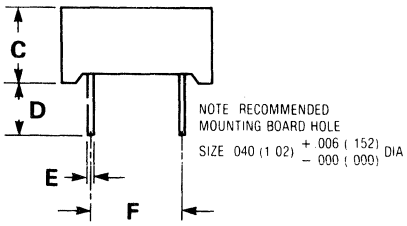

Suffix	A	B	C	D	E	F	G	H
PY926	.705 MAX	.505 MAX	.250	.180	.020	.300	.000	.100
PY926a	.696	.498	.248	.150	.012	.300		.100

49. OUTLINE DRAWINGS

PY949

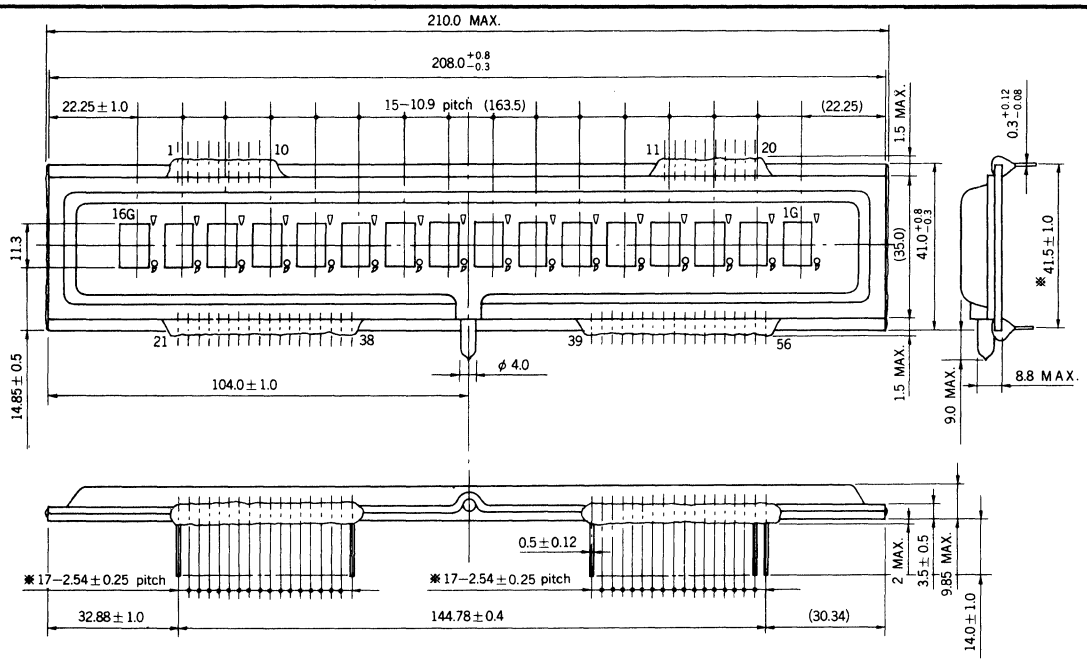

Note 1. ※ : Within 3mm from bottm of the glass substrate.
Note 2. The digit numbers (1G ~ 16G) are omitted on an actual panel.

TERMINAL CONNECTION

Terminal No.	1	2	3	4	5	6	7	8	9	10	11	12	13	14	15	16	17	18	19	20
Electrode	F	P17	P15	P13	P11	P9	P7	P5	P3	P1	P2	P4	P6	P8	P10	P12	P14	P16	P18	F
Terminal No.	21	22	23	24	25	26	27	28	29	30	31	32	33	34	35	36	37	38	39	40
Electrode	P19	P21	P23	P25	P27	P29	P31	P33	P35	Pcom1	16G	15G	14G	13G	12G	11G	10G	9G	8G	7G
Terminal No.	41	42	43	44	45	46	47	48	49	50	51	52	53	54	55	56				
Electrode	6G	5G	4G	3G	2G	1G	P.DP.	P34	P32	P30	P28	P26	P24	P22	P20	Pcom2				

PY950

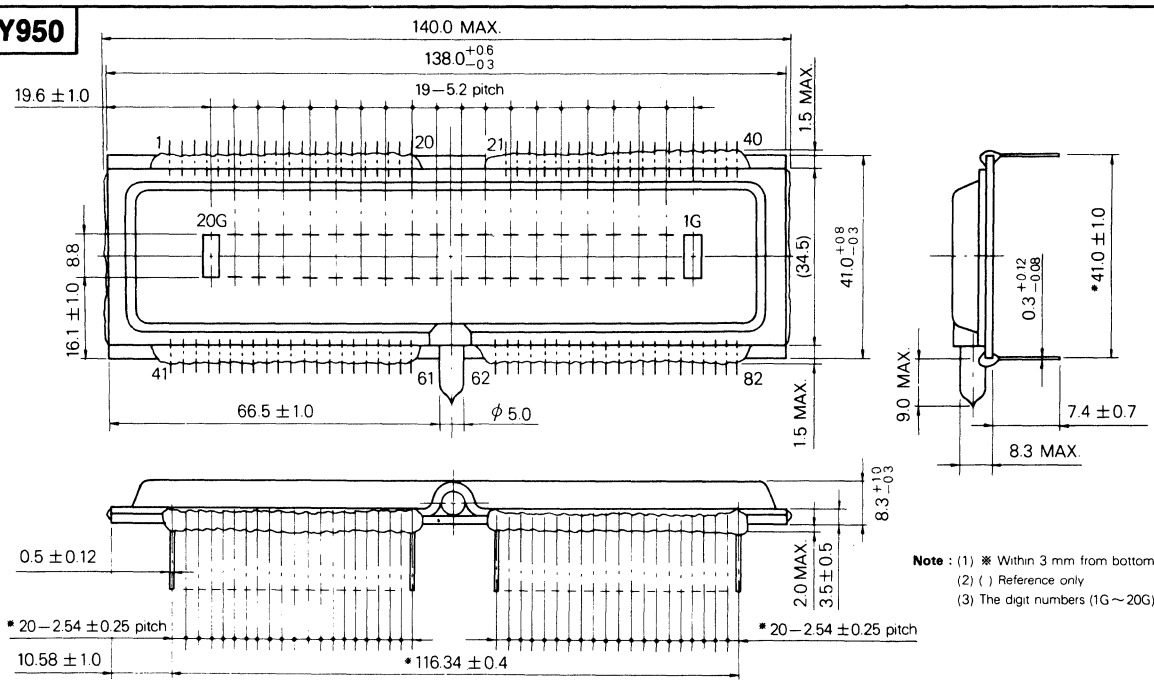

Note : (1) ※ Within 3 mm from bottom of the glass substrate.
(2) ( ) Reference only
(3) The digit numbers (1G ~ 20G) are omitted on an actual panel.

TERMINAL CONNECTION

Terminal No	1	2	3	4	5	6	7	8	9	10	11	12	13	14	15	16	17	18	19	20
Electrode	P35	P34	P33	P32	P31	P25	P24	P23	P22	P21	P15	P14	P13	P12	P11	P5	P4	P3	P2	P1
Terminal No	21	22	23	24	25	26	27	28	29	30	31	32	33	34	35	36	37	38	39	40
Electrode	P6	P7	P8	P9	P10	P16	P17	P18	P19	P20	P26	P27	P28	P29	P30	P36	P37	P38	P39	P40
Terminal No	41	42	43	44	45	46	47	48	49	50	51	52	53	54	55	56	57	58	59	60
Electrode	F	P41	P42	P43	P44	P45	P51	P52	P53	P54	P55	20G	19G	18G	17G	16G	15G	14G	13G	12G
Terminal No	61	62	63	64	65	66	67	68	69	70	71	72	73	74	75	76	77	78	79	80
Electrode	11G	10G	9G	8G	7G	6G	5G	4G	3G	2G	1G	P60	P59	P58	P57	P56	P50	P49	P48	P47
Terminal No	81	82																		
Electrode	P46	F																		

49. OUTLINE DRAWINGS

PY934

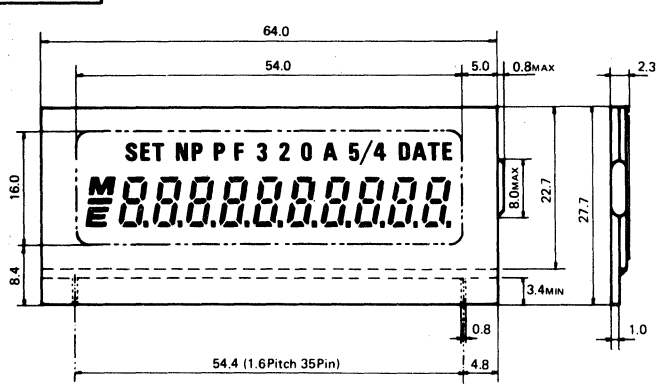

PY935

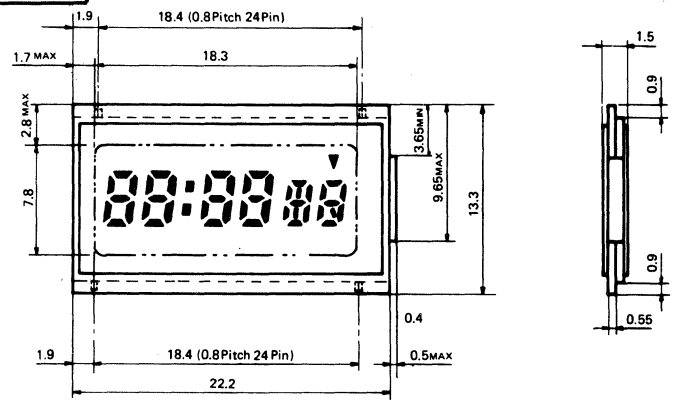

PY936

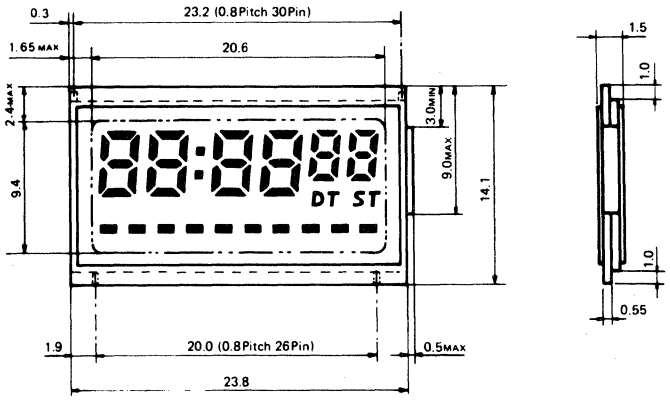

PY937

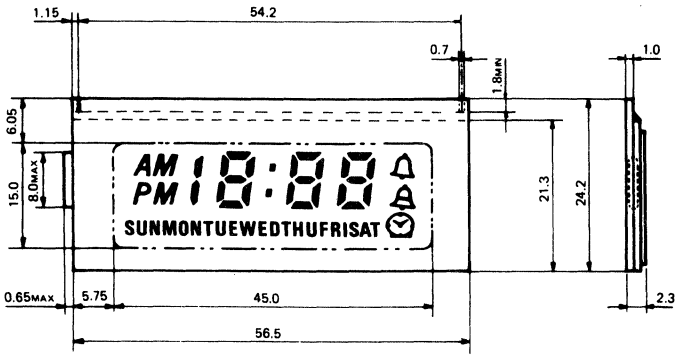

PY938

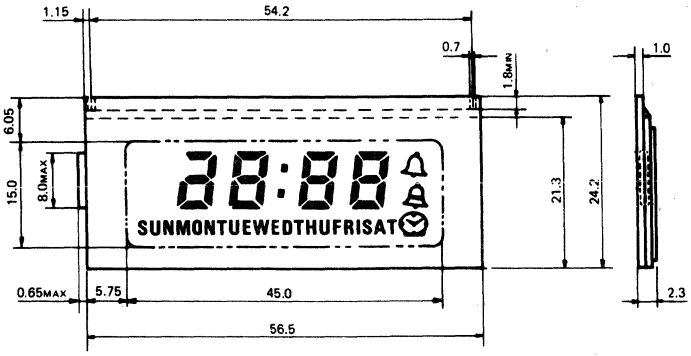

49. OUTLINE DRAWINGS

PY939

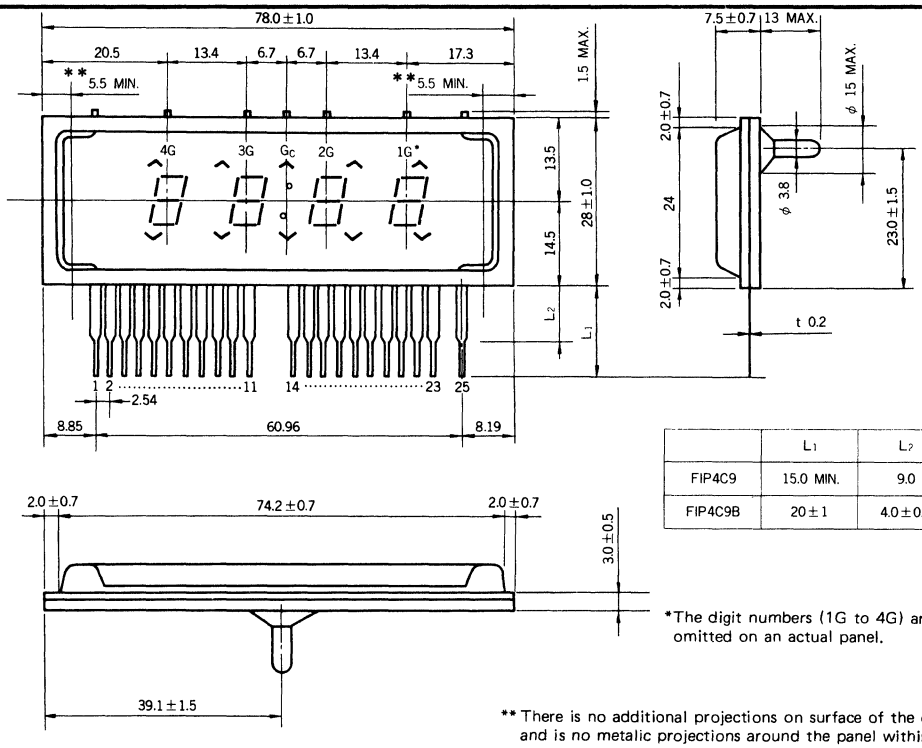

	L_1	L_2
FIP4C9	15.0 MIN.	9.0
FIP4C9B	20±1	4.0±0.5

*The digit numbers (1G to 4G) are omitted on an actual panel.

** There is no additional projections on surface of the cover glass, and is no metalic projections around the panel within this area.

Terminal Connection

Terminal No.	1	2	3	4	5	6	7	8	9	10	11	12	13	14	15	16	17	18	19	20	21	22	23	24	25
Electrode	F	G_D	NC	G_4	P(UB)	$P(B_4)$	G_4	$P(^{B_3}_{B_4})$	$P(B_3)$	G_3	$P(B_1)$	N_P	N_P	G_C	P(g)	$P(^{f}_{col_1})$	G_2	$P(^{e}_{col_2})$	P(d)	P(c)	G_1	P(b)	P(a)	NP	F

PY940

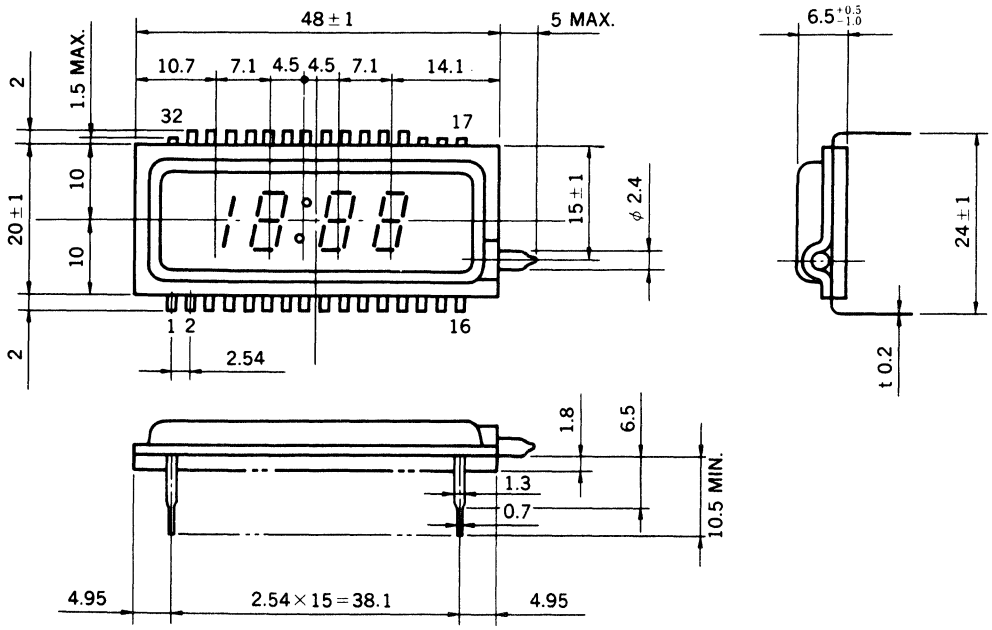

TERMINAL CONNECTION

Terminal No.	1	2	3	4	5	6	7	8	9	10	11	12	13	14	15	16
Electrode	F(−)	G	b_4 c_4	g_3	e_3	d_3	c_3	g_2	e_2	c_2	g_1	e_1	d_1	c_1	G	F(+)
Terminal No.	17	18	19	20	21	22	23	24	25	26	27	28	29	30	31	32
Electrode	NP	NP	NP	b_1	a_1	f_1	b_2	a_2 d_2	f_2	col	G	b_3	a_3	f_3	G	NP

49. OUTLINE DRAWINGS

PY941

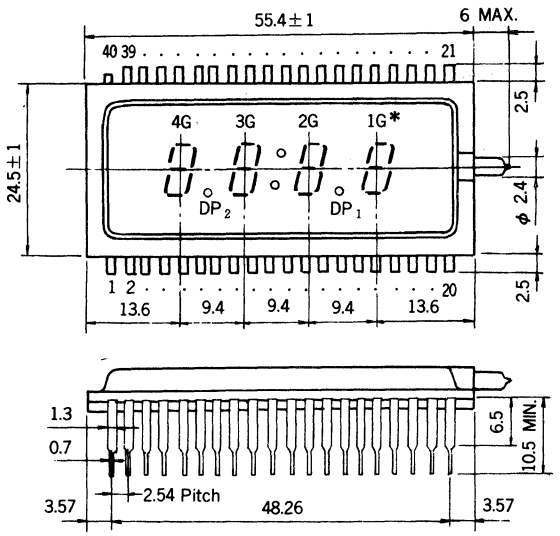

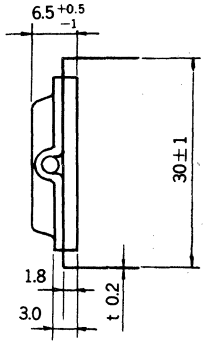

*The digit numbers(1G to 4G) are omitted on an actual panel.

TERMINAL CONNECTION

Terminal No.	1	2	3	4	5	6	7	8	9	10	11	12	13	14	15	16	17	18	19	20
Electrode	P(DP_1)	F(−)	G	P(e_4)	P(d_4)	P(c_4)	P(g_3)	P(e_3)	P(d_3)	P(c_3)	P(g_2)	P(e_2)	P(d_2)	P(c_2)	P(g_1)	P(e_1)	P(d_1)	G	F(+)	P(c_1)
Terminal No.	21	22	23	24	25	26	27	28	29	30	31	32	33	34	35	36	37	38	39	40
Electrode	NP	P(b_1)	G	P(a_1)	P(f_1)	P(b_2)	P(a_2)	P(f_2)	P(col)	P(b_3)	G	P(a_3)	P(f_3)	P(DP_2)	P(b_4)	P(a_4)	P(f_4)	G	P(g_4)	NP

PY942

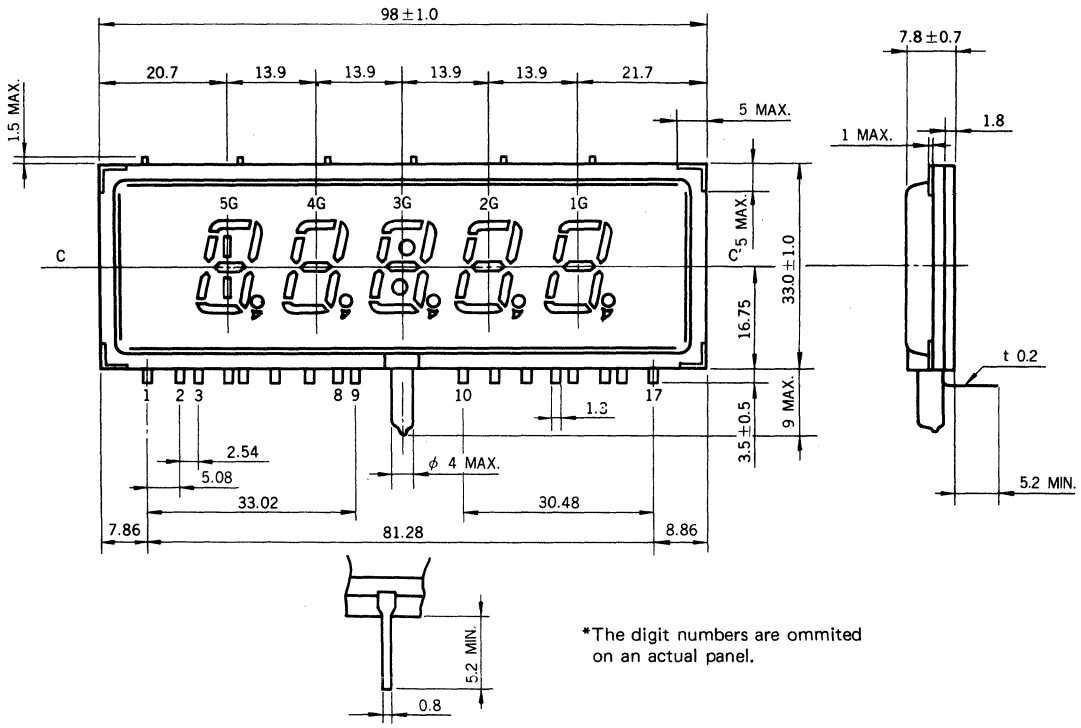

*The digit numbers are ommited on an actual panel.

Terminal Connection

Terminal No. :	1	2	3	4	5	6	7	8	9	10	11	12	13	14	15	16	17
Electrode :	F	P(f)	P(g)	5G	P(col1) P(col2) (h)	P(e)	4G	P(d)	3G	P(com)	2G	P(DP)	P(c)	1G	P(b)	P(a)	F

49. OUTLINE DRAWINGS

PY943

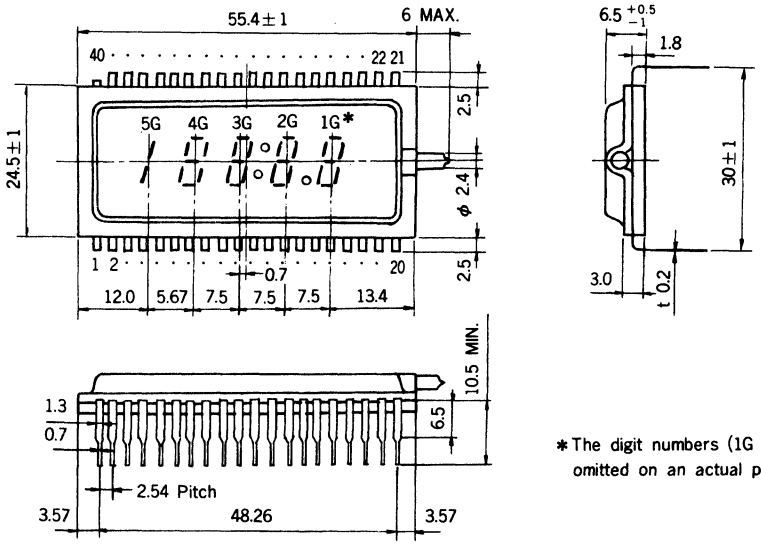

*The digit numbers (1G to 5G) are omitted on an actual panel.

TERMINAL CONNECTION

Terminal No.	1	2	3	4	5	6	7	8	9	10	11	12	13	14	15	16	17	18	19	20
Electrode	P(DP)	F(−)	G	P(e_4)	P(d_4)	P(c_4)	P(g_3)	P(e_3)	P(d_3)	P(c_3)	P(g_2)	P(e_2)	P(d_2)	P(c_2)	P(g_1)	P(e_1)	P(d_1)	G	F(+)	P(c_1)
Terminal No.	21	22	23	24	25	26	27	28	29	30	31	32	33	34	35	36	37	38	39	40
Electrode	NP	P(b_1)	G	P(a_1)	P(f_1)	P(b_2)	P(a_2)	P(f_2)	P(col)	P(b_3)	G	P(a_3)	P(f_3)	P(b_4)	P(a_4)	P(f_4)	P(g_4)	G	P(b_5)/(c_5)	NP

PY944

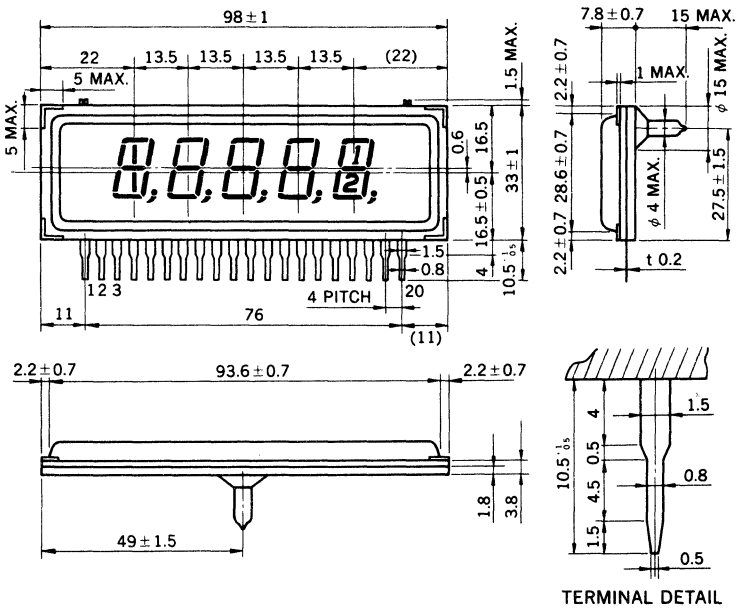

TERMINAL DETAIL

TERMINAL CONNECTION

Terminal No.	1	2	3	4	5	6	7	8	9	10	11	12	13	14	15	16	17	18	19	20
Electrode	F	P(h_1)	P(h_2)	5G	P(g)	P(f)	4G	P(e)	P(d)	3G	NC	P($\frac{1}{2}$)	P(com)	2G	P(DP)	P(c)	1G	P(b)	P(a)	F

49. OUTLINE DRAWINGS

PY945

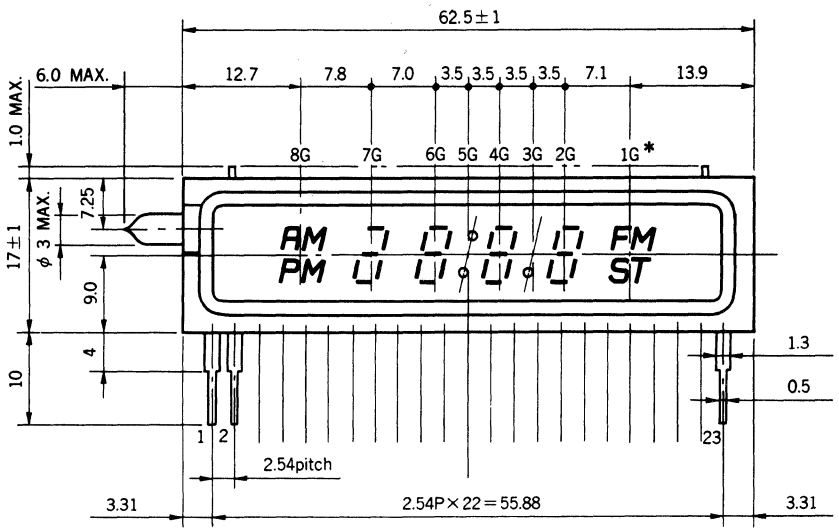

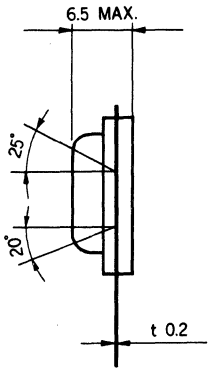

*The digit numbers (1G through 8G) are omitted on an actual panel.

TERMINAL CONNECTION

Terminal No.	1	2	3	4	5	6	7	8	9	10	11	12	13	14	15	16	17	18	19	20	21	22	23
Electrode	F(−)	P(AM)	P(PM)	P(col)	8G	P(g)	P(f)	7G	P(e)	6G	P(d)	5G	4G	P(DP)	3G	2G	P(c)	P(b)	1G	P(a)	P(ST)	P(FM)	F(+)

PY946

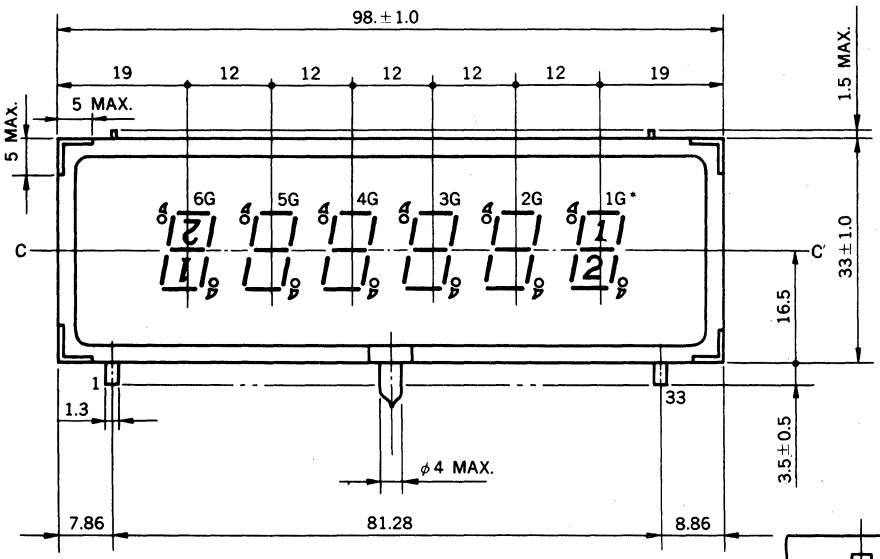

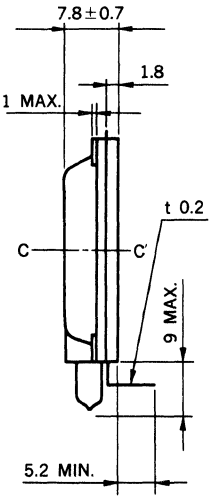

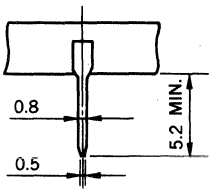

*The digit numbers (1G through 6G) are omitted on an actual panel.

TERMINAL CONNECTION

Terminal No.	1	2	3	4	5	6	7	8	9	10	11	12	13	14	15	16	17
Electrode	F	NP	P(b)	NP	P(f)	6G	P(g)	P($\frac{2}{1}$)	NP	P(com1)	5G	P(d)	NP	4G	NP	NP	NP
Terminal No.	18	19	20	21	22	23	24	25	26	27	28	29	30	31	32	33	
Electrode	NP	NP	3G	NP	P(DP1)	2G	P(e)	P(c)	NP	P($\frac{1}{2}$)	1G	P(DP2)	P(com2)	P(a)	NP	F	

49. OUTLINE DRAWINGS

PY947

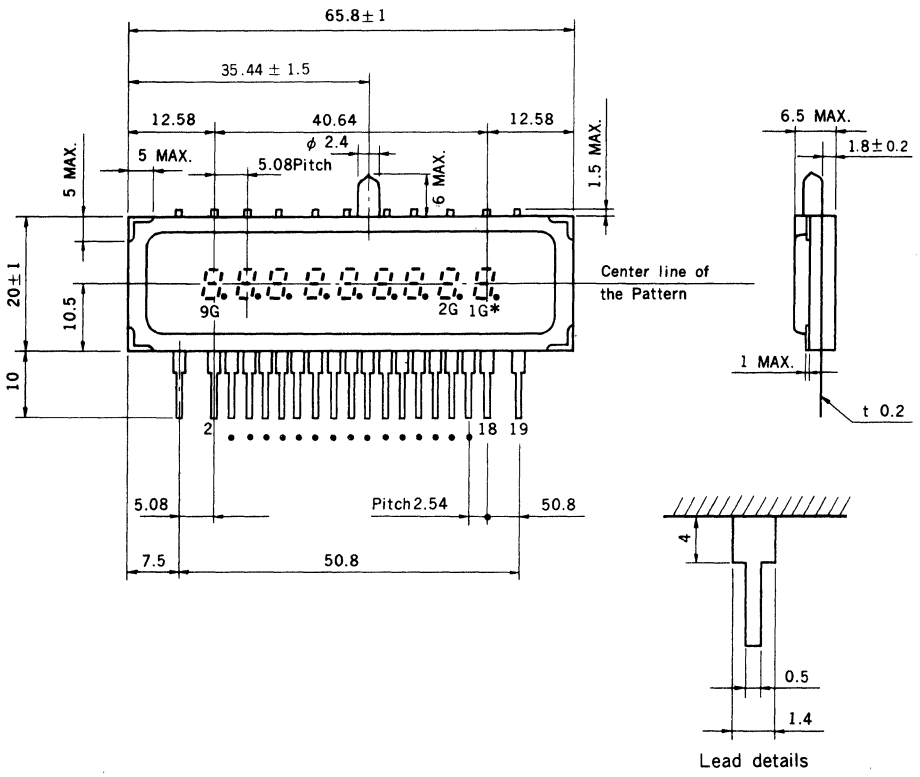

PY1077

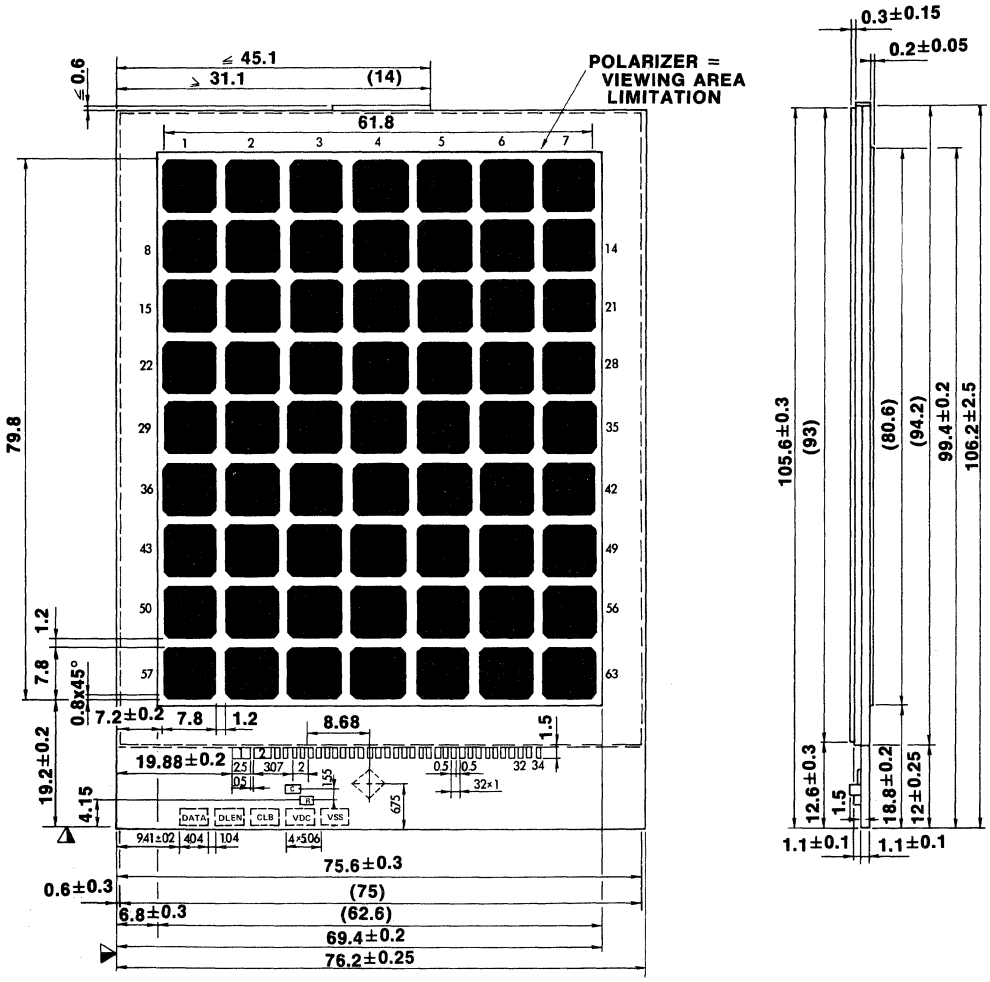

49. OUTLINE DRAWINGS

PY929

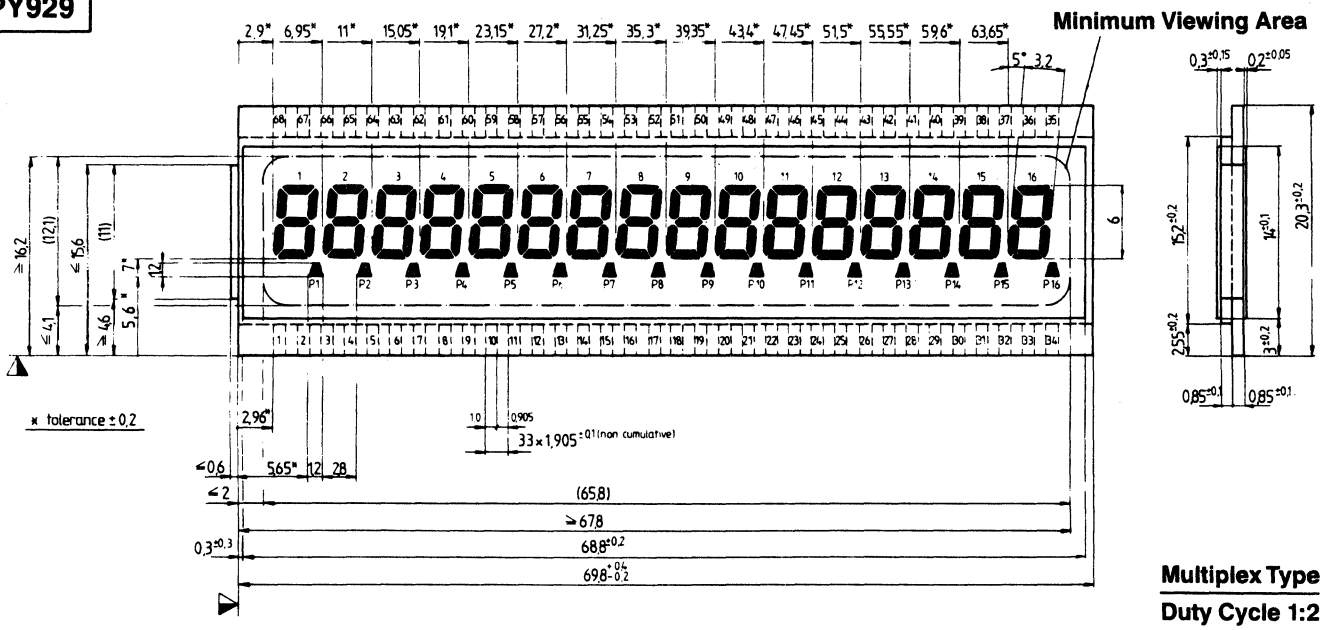

CONTACT NR.	1	2	3	4	5	6	7	8	9	10	11	12	13	14	15	16	17	18	19	20	21	22	23	24	25	26	27	28	29	30	31	32	33	34	
COMMON I	–	g1	c1	g2	c2	g3	c3	g4	c4	g5	c5	g6	c6	g7	c7	g8	c8	g9	c9	g10	c10	g11	c11	g12	c12	g13	c13	g14	c14	g15	c15	g16	c16	–	COMMON III
COMMON II	COM II	e1	d1	e2	d2	e3	d3	e4	d4	e5	d5	e6	d6	e7	d7	e8	d8	e9	d9	e10	d10	e11	d11	e12	d12	e13	d13	e14	d14	e15	d15	e16	d16	COM IV	COMMON IV

	68	67	66	65	64	63	62	61	60	59	58	57	56	55	54	53	52	51	50	49	48	47	46	45	44	43	42	41	40	39	38	37	36	35	
COMMON I	COM I	a1	b1	a2	b2	a3	b3	a4	b4	a5	b5	a6	b6	a7	b7	a8	b8	a9	b9	a10	b10	a11	b11	a12	b12	a13	b13	a14	b14	a15	b15	a16	b16	COM III	COMMON III
COMMON II	–	f1	P1	f2	P2	f3	P3	f4	P4	f5	P5	f6	P6	f7	P7	f8	P8	f9	P9	f10	P10	f11	P11	f12	P12	f13	P13	f14	P14	f15	P15	f16	P16	–	COMMON IV

PY930

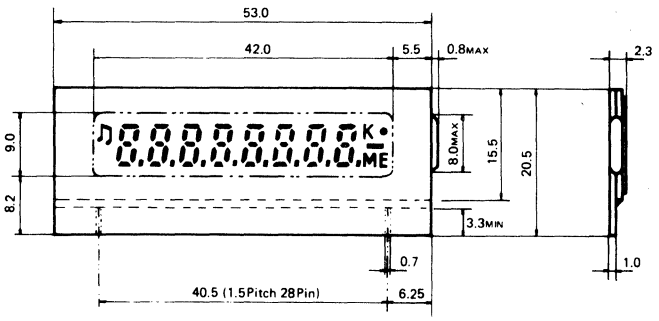

PY931

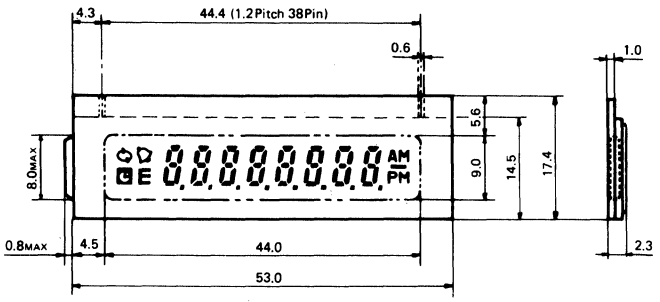

PY932

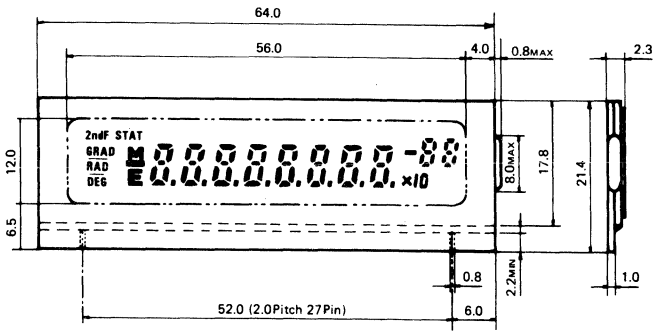

PY933

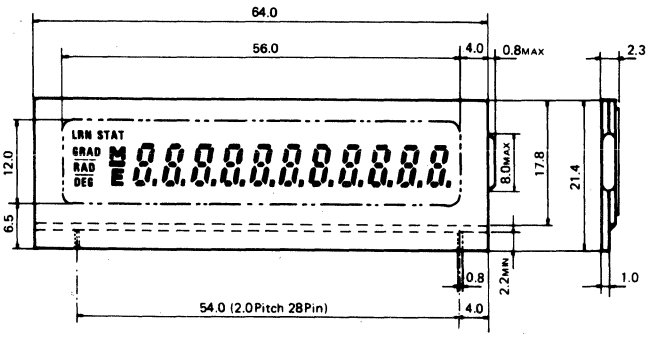

49. OUTLINE DRAWINGS

PY951

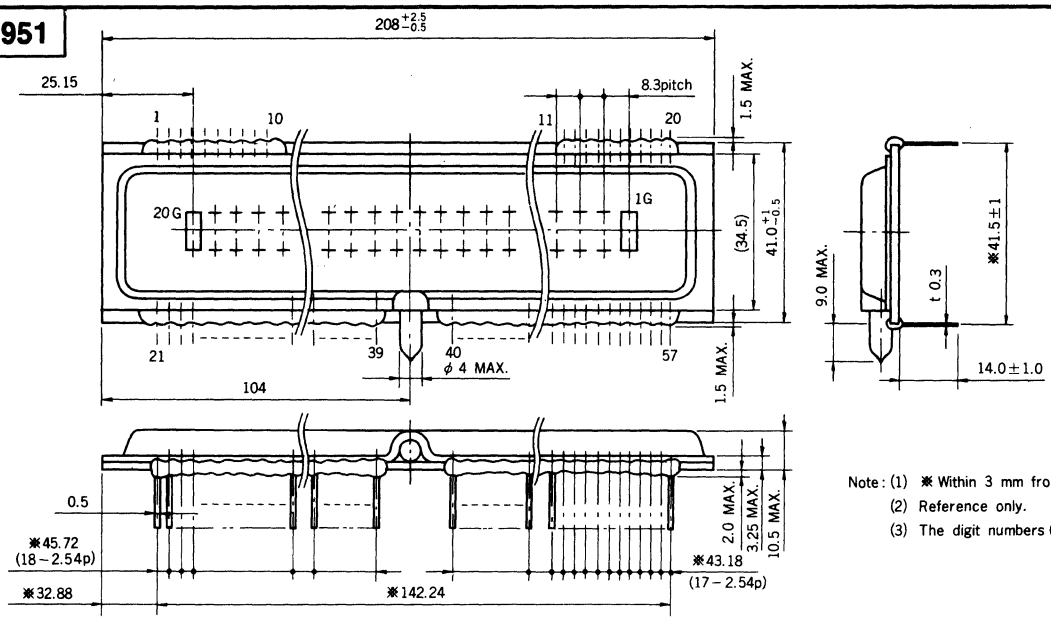

Note: (1) ※ Within 3 mm from bottom of the glass substrate.
(2) Reference only.
(3) The digit numbers (1G~20G) are omitted on an actual panel.

TERMINAL CONNECTION

Terminal No.	1	2	3	4	5	6	7	8	9	10	11	12	13	14	15	16	17	18	19	20
Electrode	F	P17	P15	P13	P11	P9	P7	P5	P3	P1	P2	P4	P6	P8	P10	P12	P14	P16	P18	F
Terminal No.	21	22	23	24	25	26	27	28	29	30	31	32	33	34	35	36	37	38	39	40
Electrode	P19	P21	P23	P25	P27	P29	P31	P33	P35	20G	19G	18G	17G	16G	15G	14G	13G	12G	11G	10G
Terminal No.	41	42	43	44	45	46	47	48	49	50	51	52	53	54	55	56	57			
Electrode	9G	8G	7G	6G	5G	4G	3G	2G	1G	P34	P32	P30	P28	P26	P24	P22	P20			

PY952

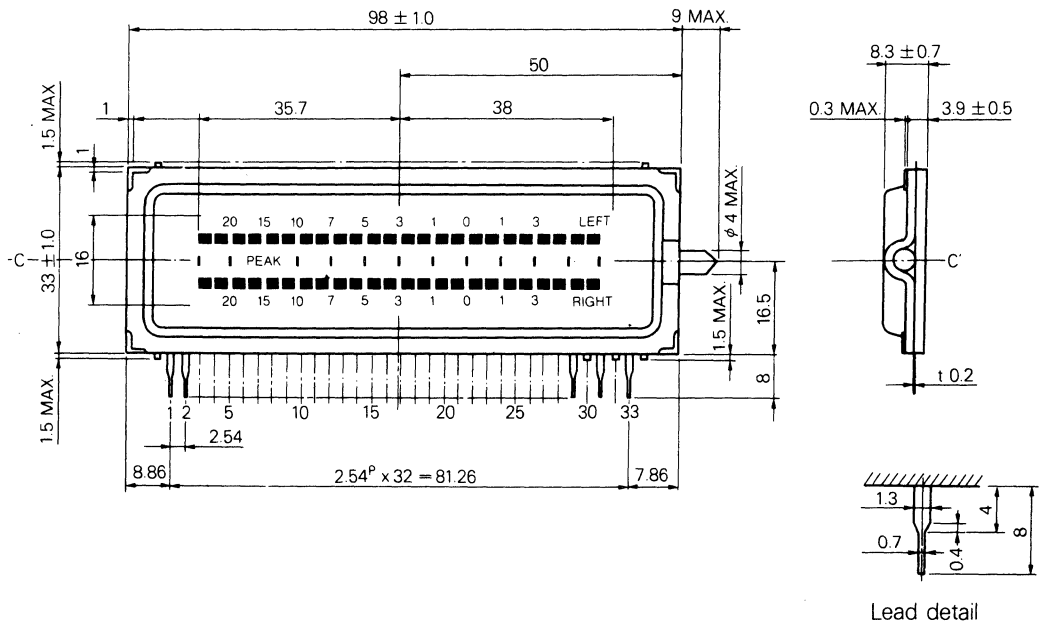

Lead detail

TERMINAL CONNECTION

Terminal No.	1	2	3	4	5	6	7	8	9	10	11	12	13	14	15	16	17
Electrode	F	P(Y)	P(X)	P(1)	G	P(2)	P(3)	P(4)	P(5)	P(6)	P(A)	P(R)	P(C)	P(D)	P(E)	P(F)	P(G)
Terminal No.	18	19	20	21	22	23	24	25	26	27	28	29	30	31	32	33	
Electrode	G	P(H)	P(I)	P(J)	P(K)	P(L)	P(7)	P(8)	P(9)	P(10)	P(11)	P(12)	N.P	P(Z)	N.P	F	

49. OUTLINE DRAWINGS

PY953

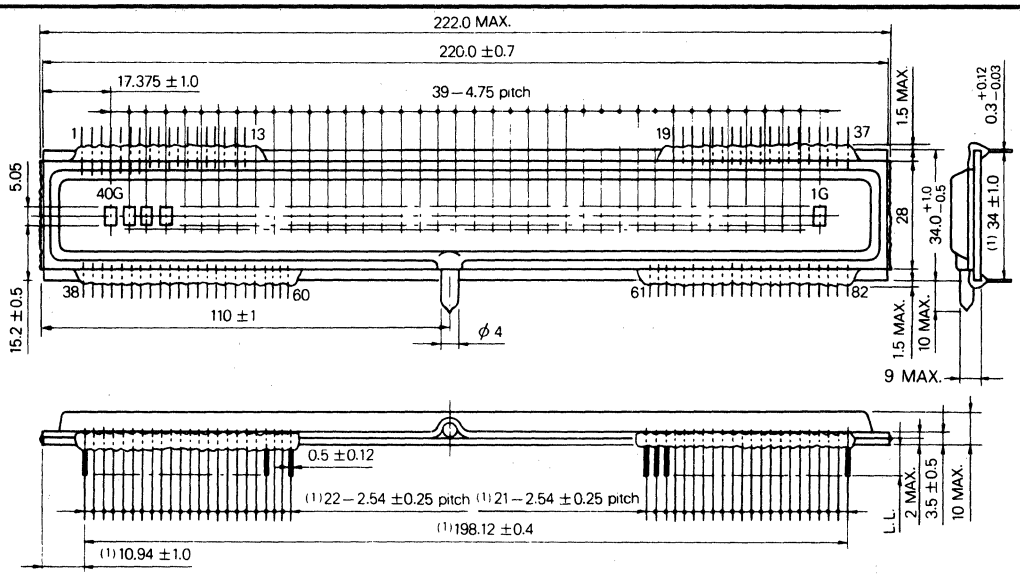

Note : (1) Within 3 mm from bottom of the glass substrate.
(2) The digit numbers (1G ~ 40G) are omitted on an actual panel.

DIFFERENCE BETWEEN FIP40A5AX AND FIP40A5X

1. Lead Length L.L.

FIP40A5AX ..... 7.4 ± 0.7
FIP40A5X ..... 14.0 ± 1.0

TERMINAL CONNECTION

Terminal No.	1	2	3	4	5	6	7	8	9	10	11	12	13	14	15	16	17	18	19	20	21	22	23	24	25
Electrode	F	P_{4}	P_{45}	P_{44}	P_{4}	1G	P_{4}	P_{4}	P_{4}	P_{4}	P_{3}	P_{3}	P_{3}	P_{3}	P_{34}	P_{3}	P_{3}	P_{3}	1G	P_{30}	P_{29}	P_{28}	P_{27}	P_{26}	P_{25}

Terminal No.	26	27	28	29	30	31	32	33	34	35	36	37	38	39	40	41	42	43	44	45	46	47	48	49	50
Electrode	P_{24}	P_{23}	P_{22}	P_{21}	P_{20}	P_{19}	1G	P_{18}	P_{17}	P_{16}	2G	F	NC	P_{15}	P_{14}	P_{13}	1G	P_{12}	P_{11}	P_{10}	P_9	P_8	P_7	P_6	P_5

Terminal No.	51	52	53	54	55	56	57	58	59	60	61	62	63	64	65	66	67	68	69	70	71	72
Electrode	P_4	P_3	P_2	P_1	1G	P_{0}	P_{59}	P_{58}	P_{57}	P_{56}	P_{55}	P_{54}	P_{53}	P_{52}	P_{51}	P_{50}	P_{49}	1G	P_{48}	P_{47}	P_{46}	NC

PY954

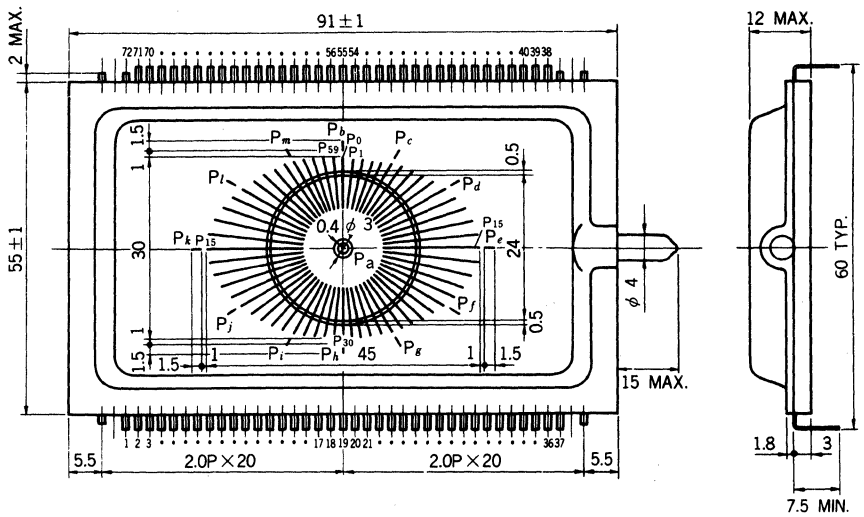

1G: outer Grid
2G: inner Grid

TERMINAL CONNECTION

Terminal No	1	2	3	4	5	6	7	8	9	10	11	12	13	14	15	16	17	18	19	20
Electrode	F	P35	P32	P31	P28	P27	P24	P23	P20	P19	P16	P15	P12	P11	P8	P7	P4	P3	P1	P2

Terminal No	21	22	23	24	25	26	27	28	29	30	31	32	33	34	35	36	37	38	39	40
Electrode	P5	P6	P9	P10	P13	P14	P17	P18	P21	P22	P25	P26	P29	P30	P33	P34	F	40G	39G	38G

Terminal No	41	42	43	44	45	46	47	48	49	50	51	52	53	54	55	56	57	58	59	60
Elcetrode	37G	36G	35G	34G	33G	32G	31G	30G	29G	28G	27G	26G	25G	24G	23G	22G	21G	P36	P37	P38

Terminal No	61	62	63	64	65	66	67	68	69	70	71	72	73	74	75	76	77	78	79	80
Electrode	P39	P40	20G	19G	18G	17G	16G	15G	14G	13G	12G	11G	10G	9G	8G	7G	6G	5G	4G	3G

Terminal No	81	82
Electrode	2G	1G

49. OUTLINE DRAWINGS

PY1010

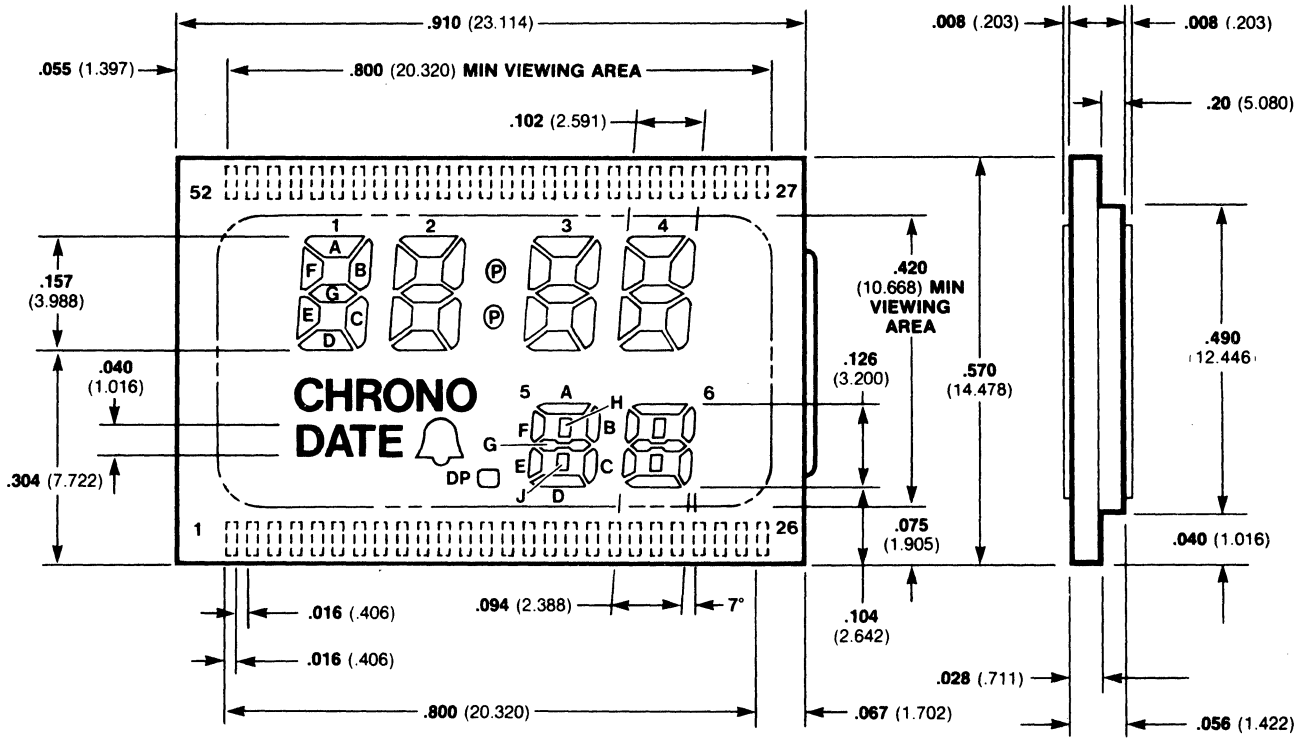

PY956

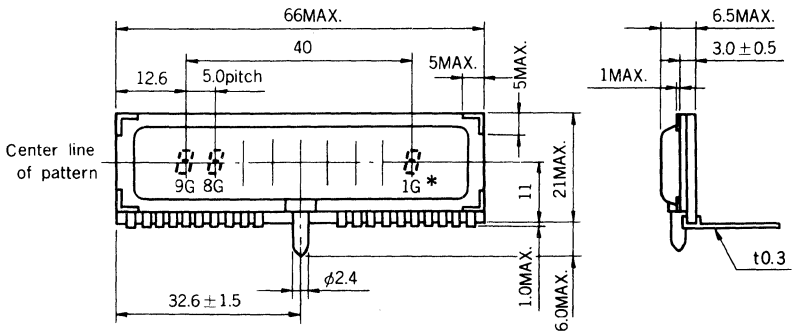

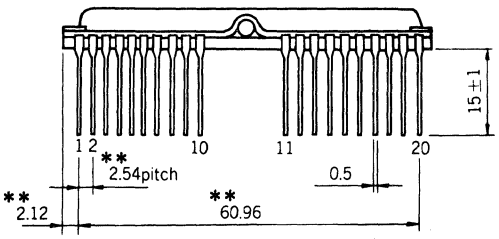

*The digit numbers (1G to 9G) are omitted on an actual panel.

**These are specified within 3mm from the edge of substrate.

49. OUTLINE DRAWINGS

PY957

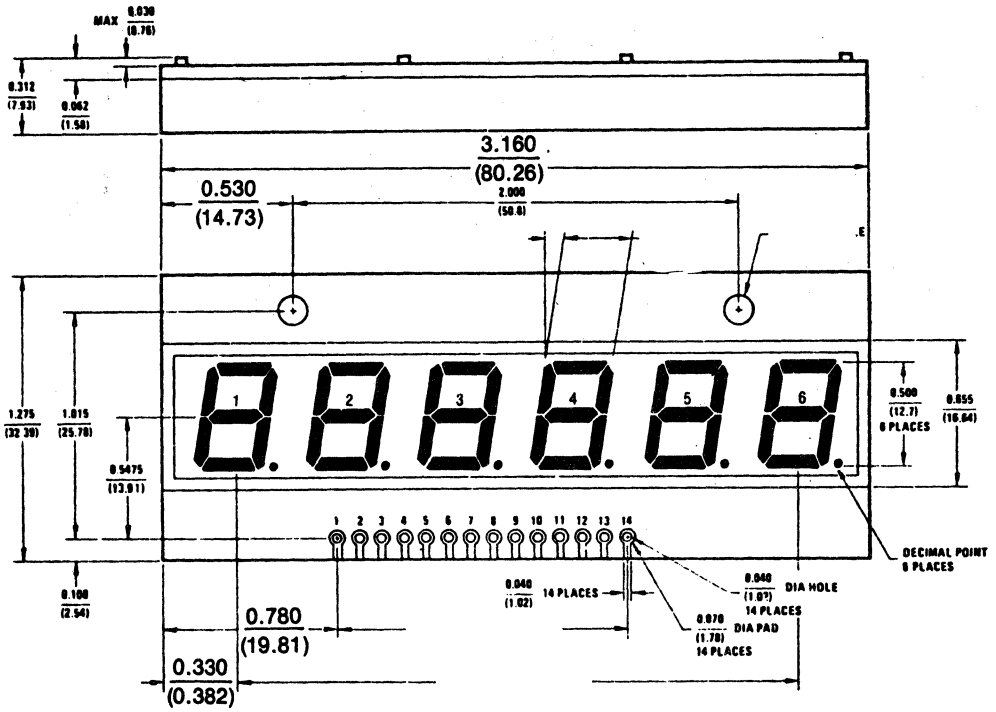

PY1008

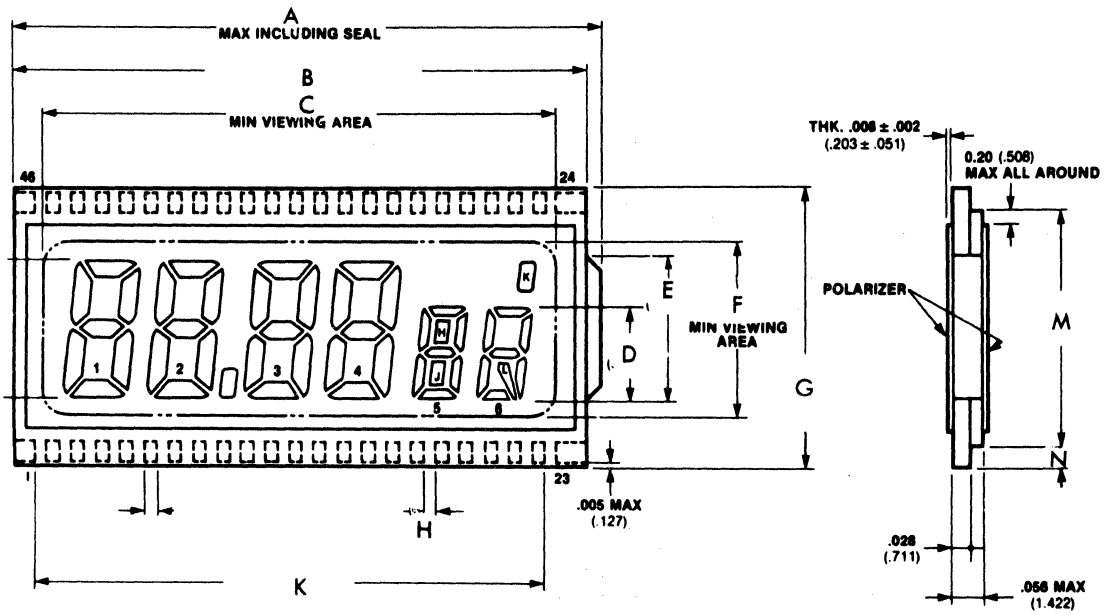

	A	B	C	D	E	F	G	H	J	K	M	N
PY1008	.965	.941	.843	.150	236	.283	.453	.020	.020	.827	.374	.040
PY1008a	.599	.583	.496	.086	113	.189	.354	.011	.011	.474	.315	.039
PY1008b	.845	.827	.740	.120	.210	.268	.460		.015		.360	.050
PY1008c	.956	.941	.846	.150	.236	.303	.453	.020	.020	.826	.374	.040

49. OUTLINE DRAWINGS

PY977 Dimensions in mm

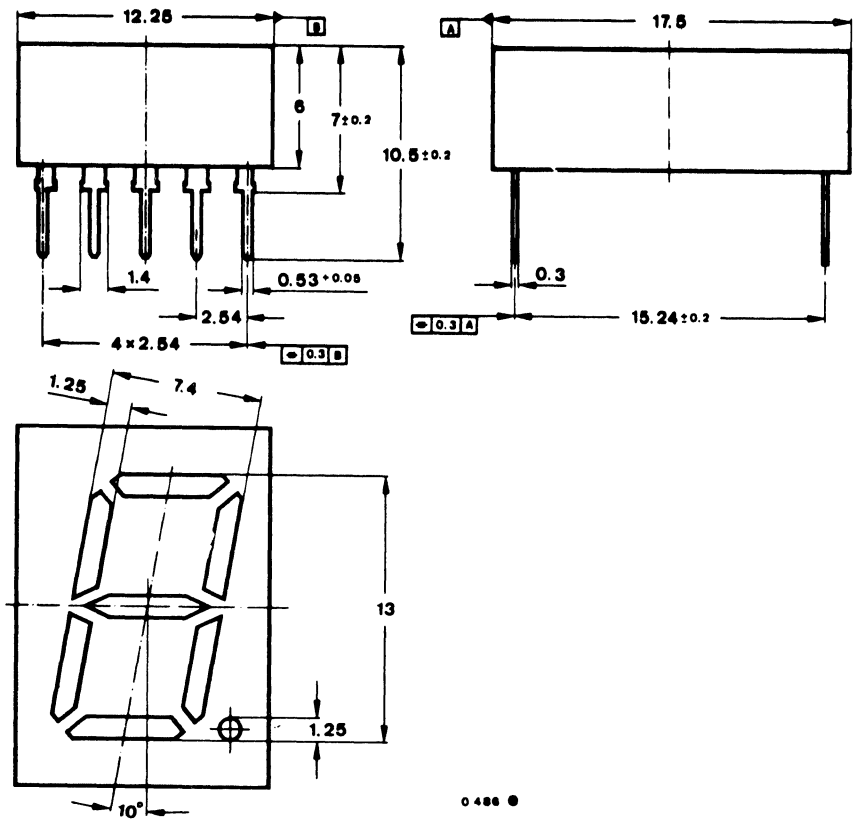

PY977a

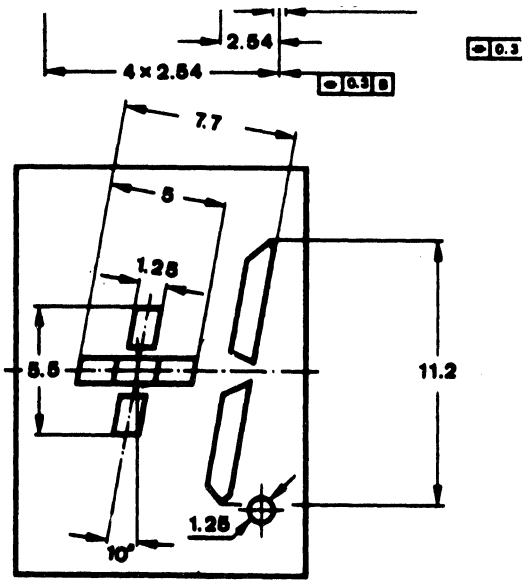

49. OUTLINE DRAWINGS

PY959

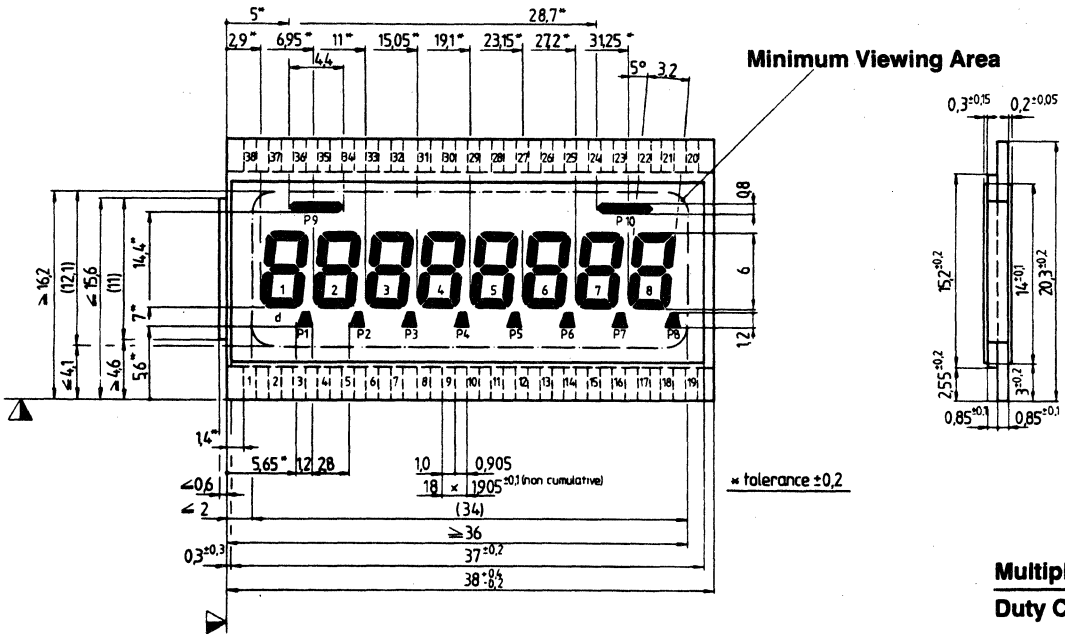

Multiplex Type
Duty Cycle 1:2

CONTACT NR.	1	2	3	4	5	6	7	8	9	10	11	12	13	14	15	16	17	18	19
COMMON I	–	g1	c1	g2	c2	g3	c3	g4	c4	g5	c5	g6	c6	g7	c7	g8	c8	–	COM I
COMMON II	COM II	e1	d1	e2	d2	e3	d3	e4	d4	e5	d5	e6	d6	e7	d7	e8	d8	COM II	–
to be used in any case	38	37	36	35	34	33	32	31	30	29	28	27	26	25	24	23	22	21	20
	COM I	a1	b1	P9	a2	b2	a3	b3	a4	b4	a5	b5	a6	b6	a7	b7	P10	a8	b8
	–	f1	P1	–	f2	P2	f3	P3	f4	P4	f5	P5	f6	P6	f7	P7	–	f8	P8

optional

P9, P10: Connect to COM I if not used.

PY960

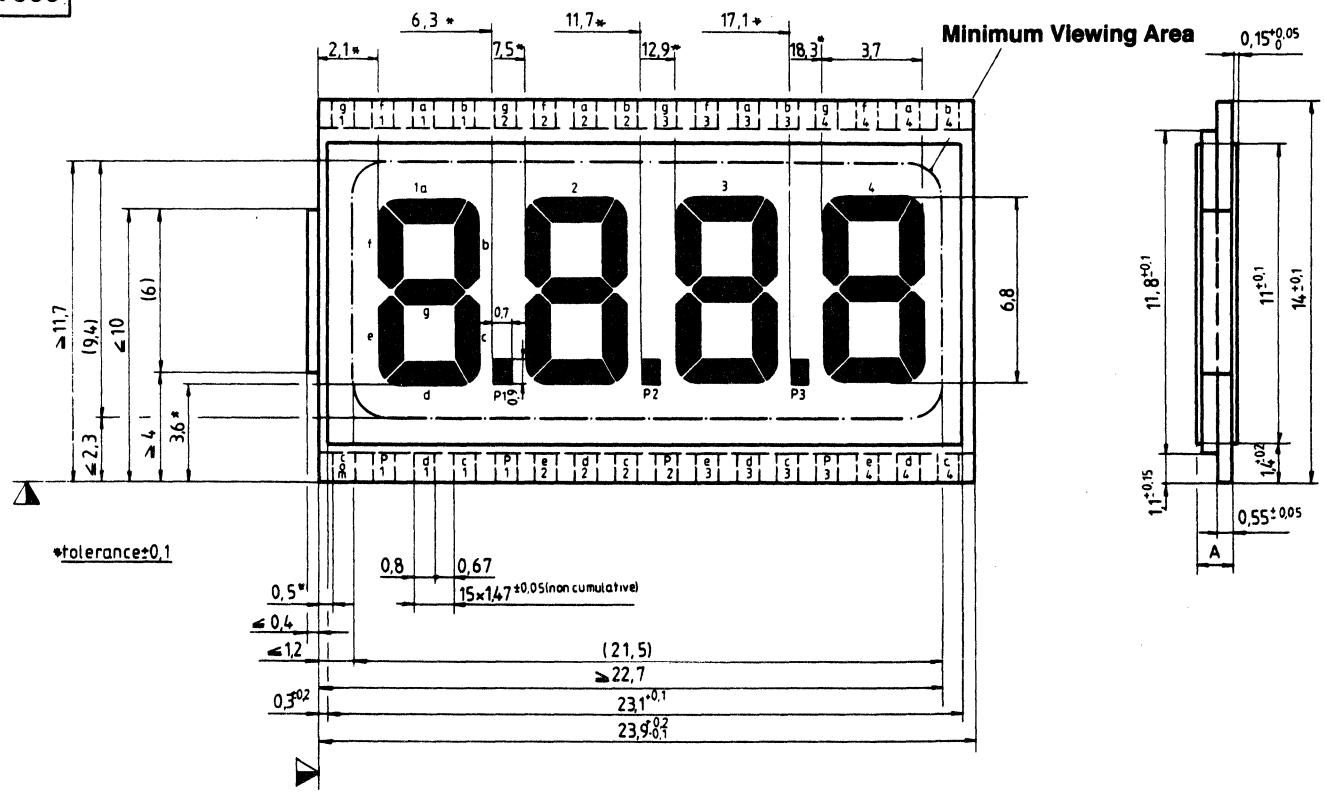

All not used segments have to be connected to common.

49. OUTLINE DRAWINGS

PY978

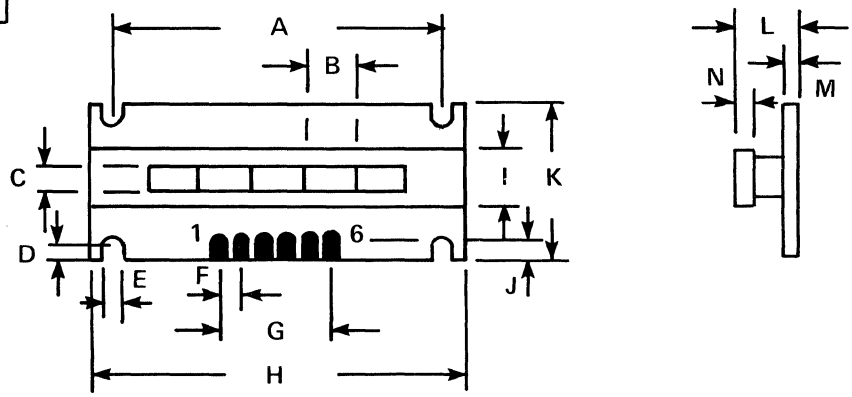

DIM	Millimeters	Inches
A	26.46	1.042
B	3.78	0.149
C	1.00	0.039
D	3.81	0.150
E	1.50	0.059
F	1.13	0.044
G	2.54	0.100
H	20.32	0.800
I	30.40	1.197
J	4.80	0.189
K	13.00	0.512
L	3.3	0.130
M	1.00	0.039
$\phi 1$	1.50	0.059
$\phi 2$	0.90	0.035

Tol.±0.3mm/0.012inch

PY979

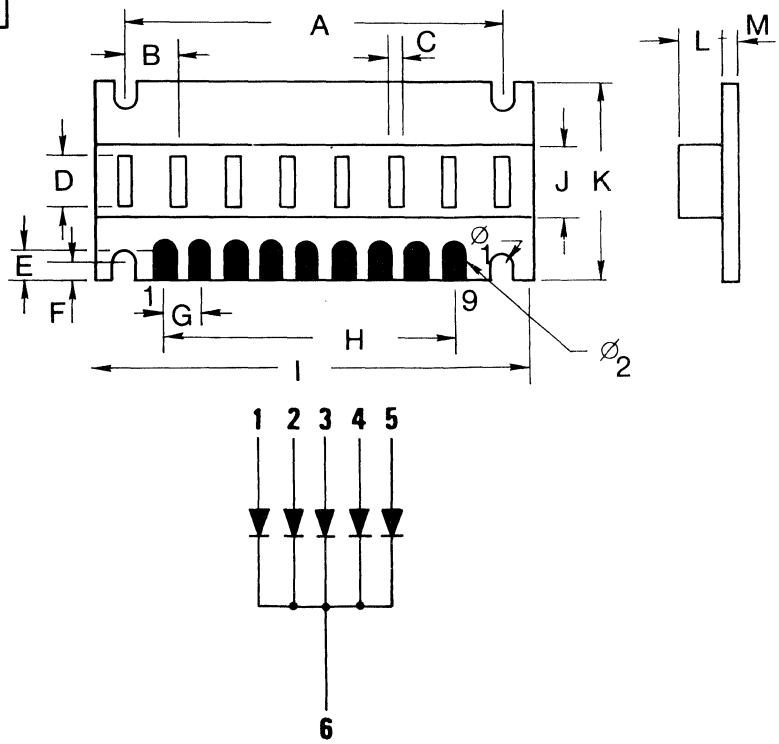

DIM	Millimeters	Inches
A	25.40	1.000
B	7.60	0.229
C	12.70	0.500
D	12.70	0.500
E	28.22	1.111
F	1.65	0.065
G	7.50	0.295
H	17.70	0.697
I	5.60	0.220
J	24.13	0.950
K	0.70	0.028
L	2.54	0.100
ϕ	10°	

Tol.±0.3mm/0.012inch

PY980

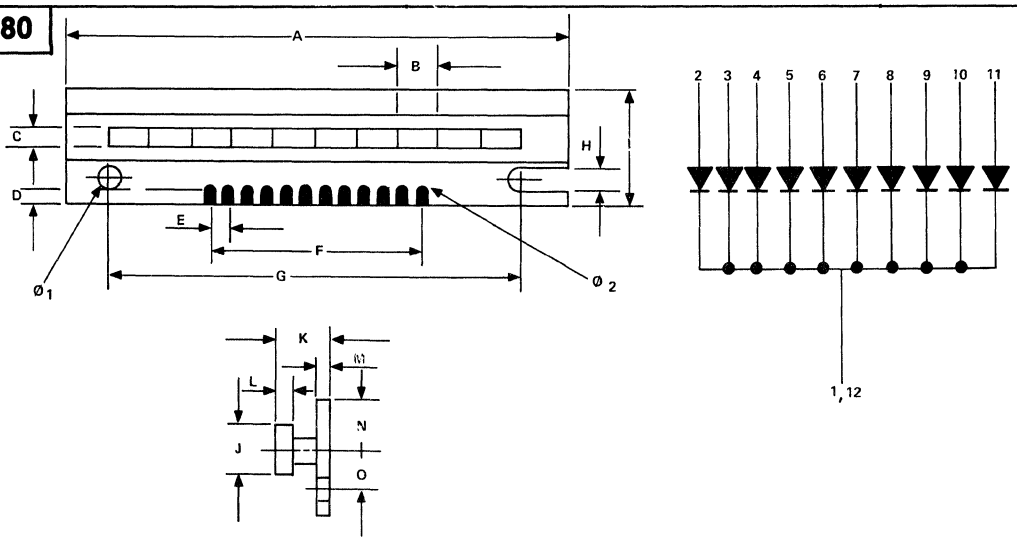

DIM	Millimeters	Inches
A	66.30	2.610
B	5.30	0.209
C	2.00	0.079
D	1.75	0.069
E	2.54	0.100
F	27.94	1.100
G	56.00	2.205
H	2.50	0.098
I	15.00	0.590
J	6.00	0.236
K	7.00	0.276
L	2.00	0.079
M	1.50	0.059
N	6.00	0.236
O	5.00	0.197
$\phi 1$	2.50	0.098
$\phi 2$	0.90	0.035

Tol.±0.3mm/0.012inch

49. OUTLINE DRAWINGS

PY981

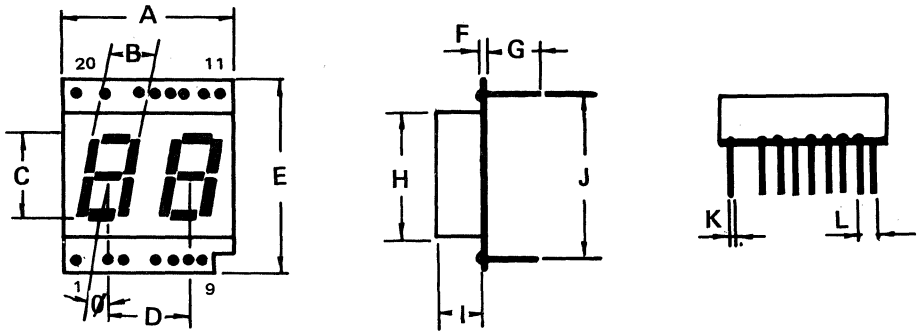

DIM	Millimeters	Inches
A	32.50	1.280
B	5.30	0.209
C	2.00	0.079
D	1.25	0.049
E	1.50	0.059
F	2.54	0.100
G	12.70	0.500
H	38.50	1.516
I	6.00	0.236
J	1.50	0.059
K	16.30	0.642
L	7.00	0.276
M	1.50	0.059
N	2.00	0.079

Tol.±0.3mm/0.012inch

PY982

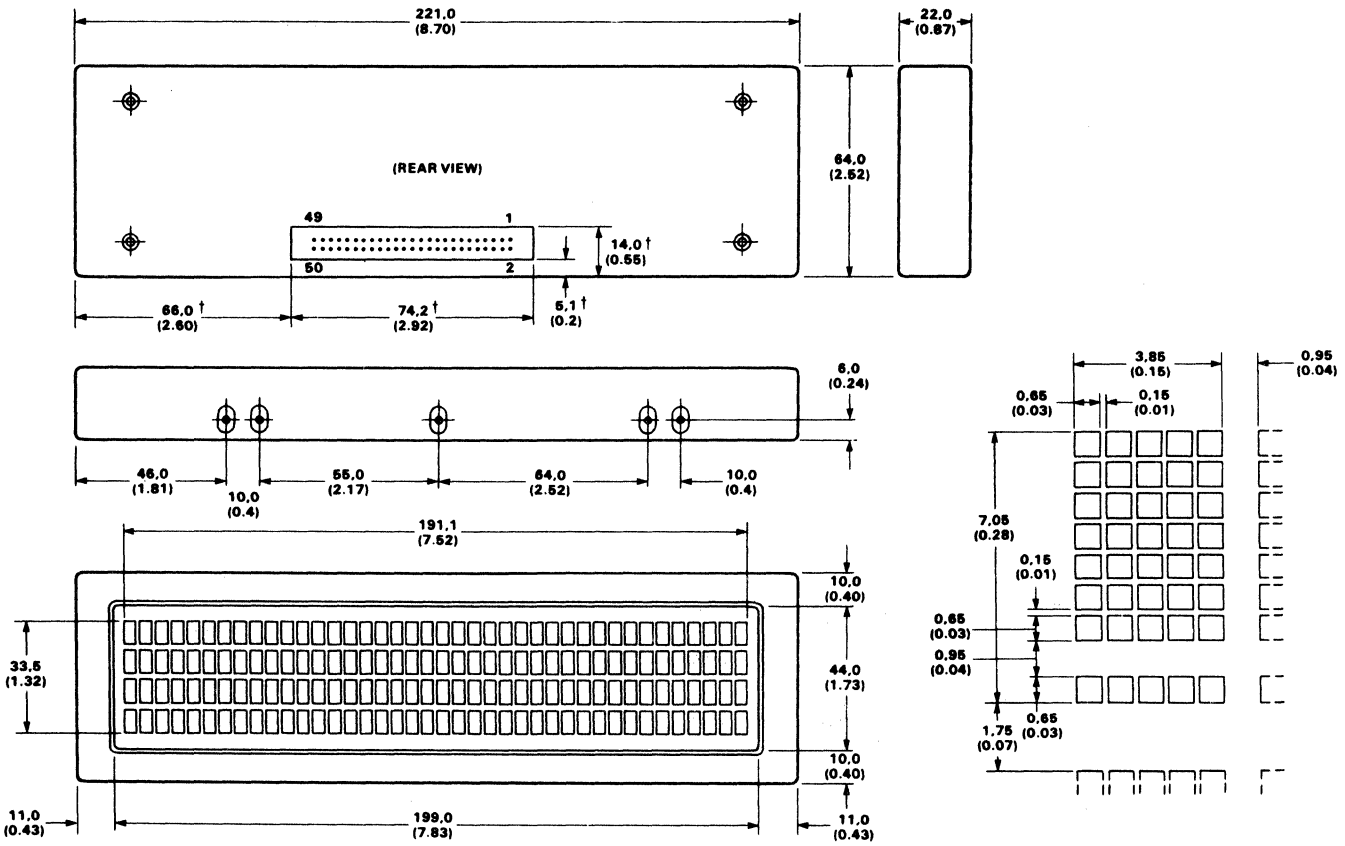

† Dimensions are approximate

All Dimensions: mm (inch)

49. OUTLINE DRAWINGS

PY983

Module Outline Dimensions

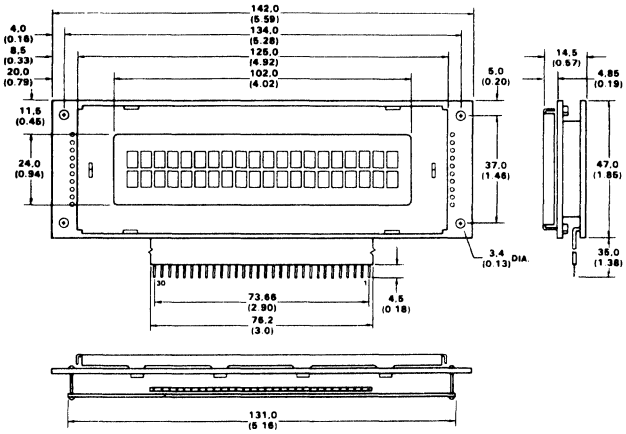

Pin Assignment

Pin No.	30	29	28	27	26	25	24	23	22	21	20	19	18	17	16	15	14	13	12	11	10	9	8	7	6	5	4	3	2	1
Signal	V_{SS}	CSTB	CIRH	ADF	CSH	CSL	CAD4	CAD5	CAD4	CAD3	CAD2	CAD1	CE	AD6	AD5	AD4	AD3	AD2	AD1	S1	S2	S4	D1	D2	D3	D4	D5	ϕ	NC	V_{DD}

Details of Dot Matrix

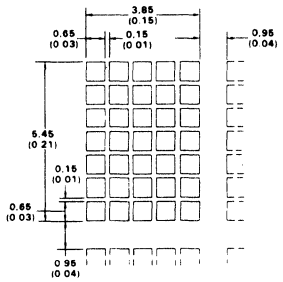

PY984

Module Outline Dimensions

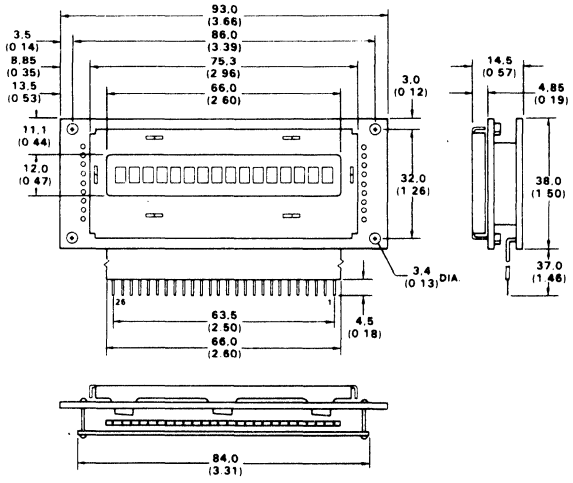

Pin Assignment

Pin No.	26	25	24	23	22	21	20	19	18	17	16	15	14	13	12	11	10	9	8	7	6	5	4	3	2	1
Signal	V_{SS}	CSTB	CIRH	ADF	CSH	CSL	CAD4	CAD3	CAD2	CAD1	CE	AD4	AD3	AD2	AD1	S1	S2	S4	D1	D2	D3	D4	D5	ϕ	NC	V_{DD}

Details of Dot Matrix

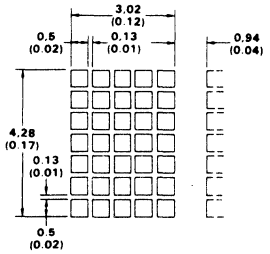

PY1468

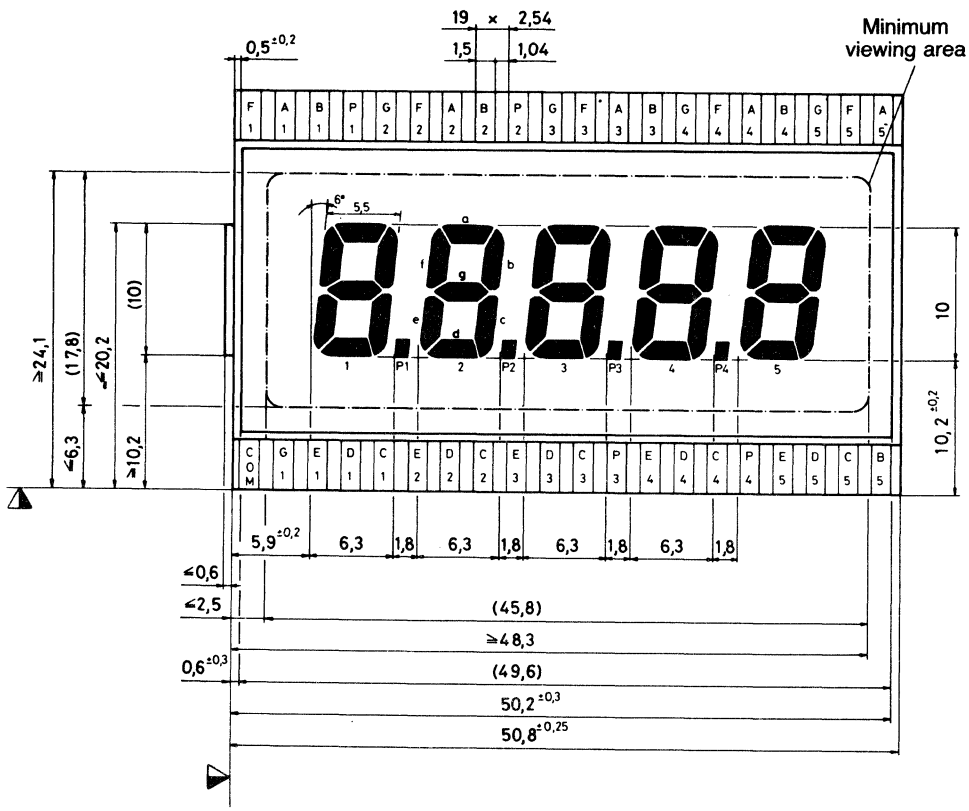

with DIP III connectors

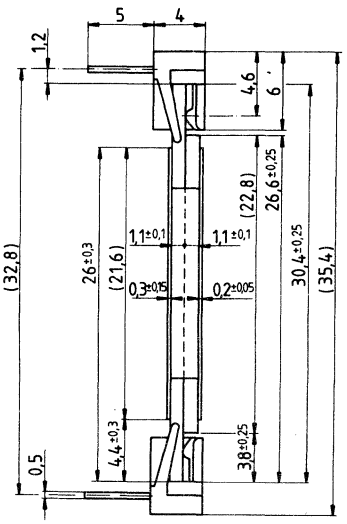

49. OUTLINE DRAWINGS

PY991

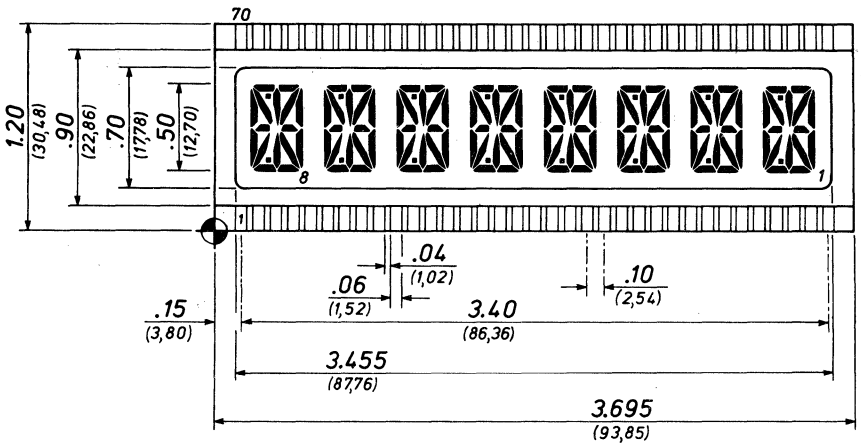

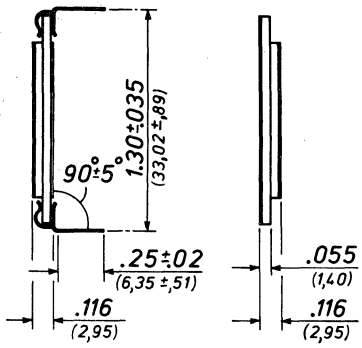

NOTE: Characters 1 thru 4 controlled by driver "R" - Characters 5 thru 8 controlled by driver "L"

PAD No.	1	2	3	4	5	6	7	8	9	10	11	12	13	14	15	16	17	18	19	20	21	22	23	24	25	26	27	28	29	30	31	32	33	34	35
COM 1	—	—	H8	a8	C8	—	H7	a7	C7	—	H6	a6	C6	—	H5	a5	C5	—	H4	a4	C4	—	H3	a3	C3	—	H2	a2	C2	—	H1	a1	C1	—	—
COM 2	—	—	G8	b8	D8	—	G7	b7	D7	—	G6	b6	D6	—	G5	b5	D5	—	G4	b4	D4	—	G3	b3	D3	—	G2	b2	D2	—	G1	b1	D1	—	CM2
COM 3	CM3	—	R8	F8	E8	—	R7	F7	E7	—	R6	F6	E6	—	R5	F5	E5	—	R4	F4	E4	—	R3	F3	E3	—	R2	F2	E2	—	R1	F1	E1	CM3	—
INTERSIL REF.	5L	—	29	27	24	—	23	21	18	—	17	15	12	—	11	9	6	—	29	27	24	—	23	21	18	—	17	15	12	—	11	9	6	5R	4R

PAD No.	36	37	38	39	40	41	42	43	44	45	46	47	48	49	50	51	52	53	54	55	56	57	58	59	60	61	62	63	64	65	66	67	68	69	70
COM 1	CM1	—	B1	K1	A1	—	B2	K2	A2	—	B3	K3	A3	—	B4	K4	A4	—	B5	K5	A5	—	B6	K6	A6	—	B7	K7	A7	—	B8	K8	A8	CM1	—
COM 2	—	—	L1	P1	J1	—	L2	P2	J2	—	L3	P3	J3	—	L4	P4	J4	—	L5	P5	J5	—	L6	P6	J6	—	L7	P7	J7	—	L8	P8	J8	—	CM2
COM 3	—	—	M1	N1	S1	—	M2	N2	S2	—	M3	N3	S3	—	M4	N4	S4	—	M5	N5	S5	—	M6	N6	S6	—	M7	N7	S7	—	M8	N8	S8	—	—
INTERSIL REF.	3R	—	7	8	10	—	13	14	16	—	19	20	22	—	25	26	28	—	7	8	10	—	13	14	16	—	19	20	22	—	25	26	28	3L	4L

PY992

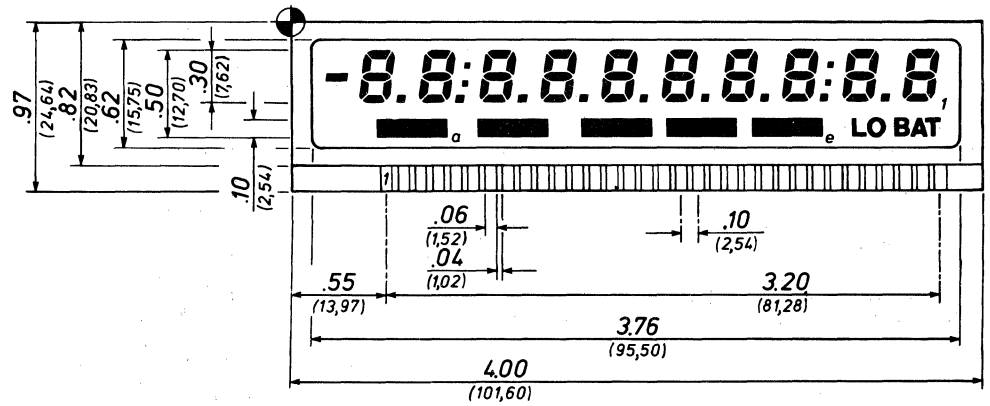

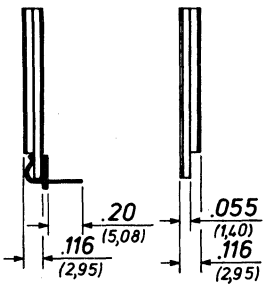

NOTE: Words or symbols may be printed over annunciators (a thru e) on a custom basis.

PAD No.	1	2	3	4	5	6	7	8	9	10	11	12	13	14	15	16	17	18	19	20	21	22	23	24	25	26	27	28	29	30	31	32	33
COM 1	F10	A10	B10	F9	A9	B9	F8	A8	B8	F7	A7	B7	F6	A6	B6	F5	A5	B5	F4	A4	B4	F3	A3	B3	F2	A2	B2	F1	A1	B1	—	—	CM1
COM 2	E10	G10	C10	E9	G9	C9	E8	G8	C8	E7	G7	C7	E6	G6	C6	E5	G5	C5	E4	G4	C4	E3	G3	C3	E2	G2	C2	E1	G1	C1	—	CM2	—
COM 3	MIN.	D10	DP9	a	D9	DP8	COL.	D8	DP7	b	D7	DP6	—	D6	DP5	c	D5	DP4	d	D4	DP3	e	D3	DP2	COL.	D2	DP1	LO BAT	D1	—	CM3	—	—
INTERSIL REF.	35	34	33	32	31	30	29	28	27	26	25	24	23	22	21	20	19	18	17	16	15	14	13	12	11	10	9	8	7	6	5	4	3

49. OUTLINE DRAWINGS

PY993

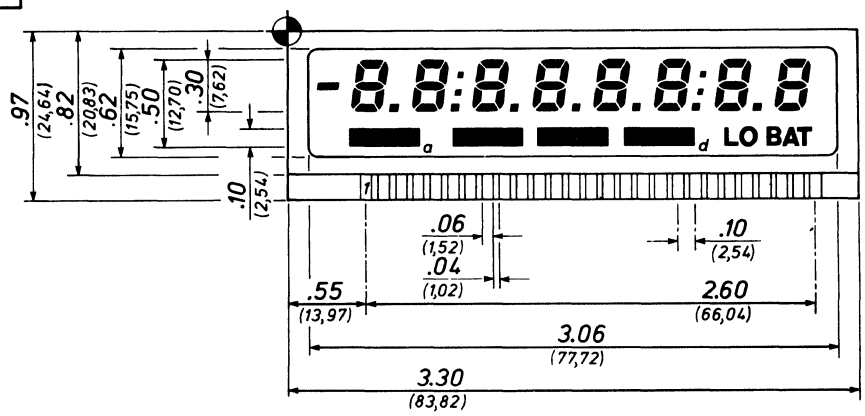

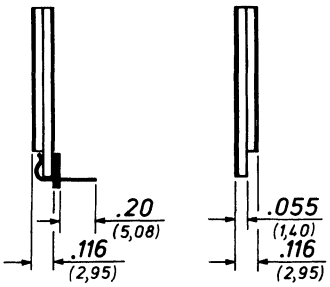

NOTE: Words or symbols may be printed over annunciators (a thru d) on a custom basis.

PAD Nº.	1	2	3	4	5	6	7	8	9	10	11	12	13	14	15	16	17	18	19	20	21	22	23	24	25	26	27
COM 1	F8	A8	B8	F7	A7	B7	F6	A6	B6	F5	A5	B5	F4	A4	B4	F3	A3	B3	F2	A2	B2	F1	A1	B1	—	—	CM1
COM 2	E8	G8	C8	E7	G7	C7	E6	G6	C6	E5	G5	C5	E4	G4	C4	E3	G3	C3	E2	G2	C2	E1	G1	C1	—	CM2	—
COM 3	MIN.	D8	DP7	a	D7	DP6	COL.	D6	DP5	b	D5	DP4	c	D4	DP3	d	D3	DP2	COL.	D2	DP1	LO BAT	D1	—	CM3	—	—
INTERSIL REF.	29	28	27	26	25	24	23	22	21	20	19	18	17	16	15	14	13	12	11	10	9	8	7	6	5	4	3

PY994

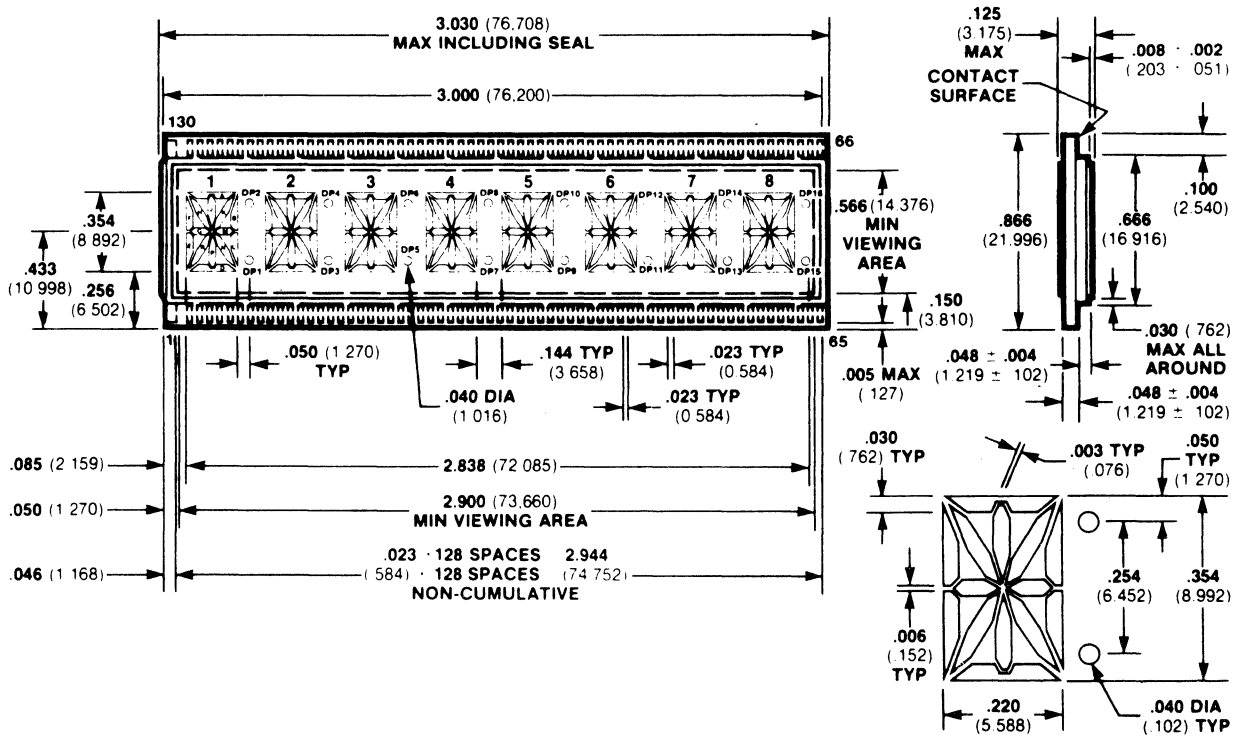

49. OUTLINE DRAWINGS

PY1049

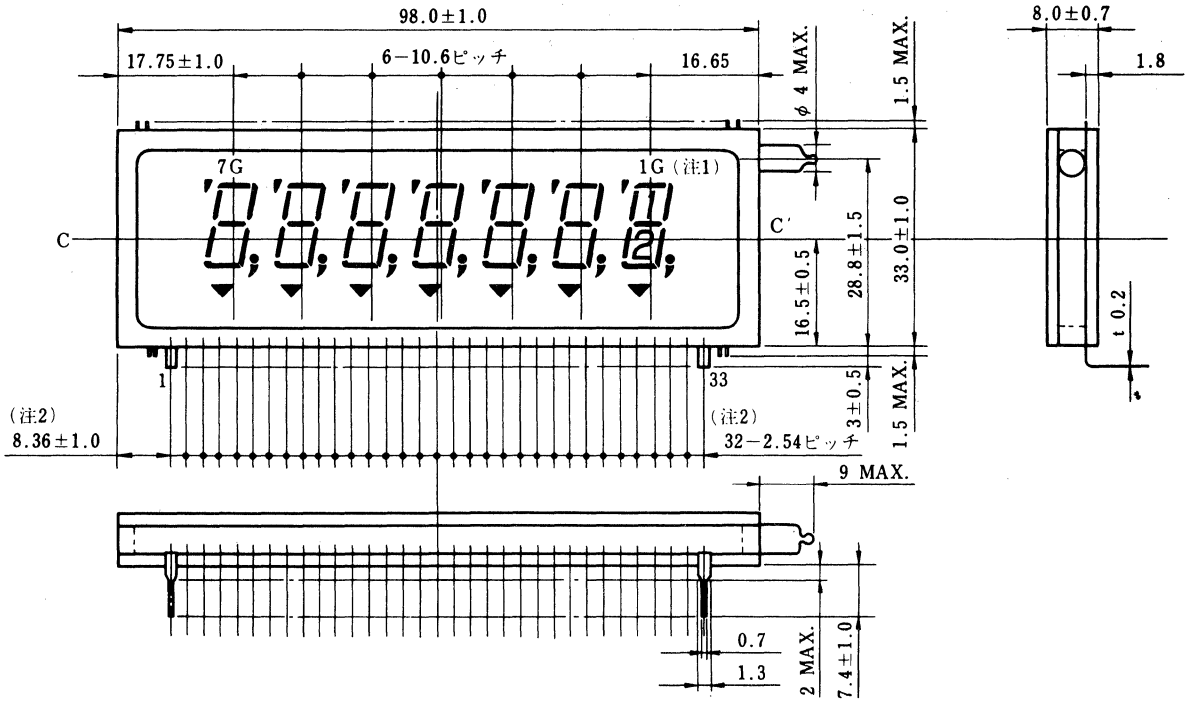

PY996

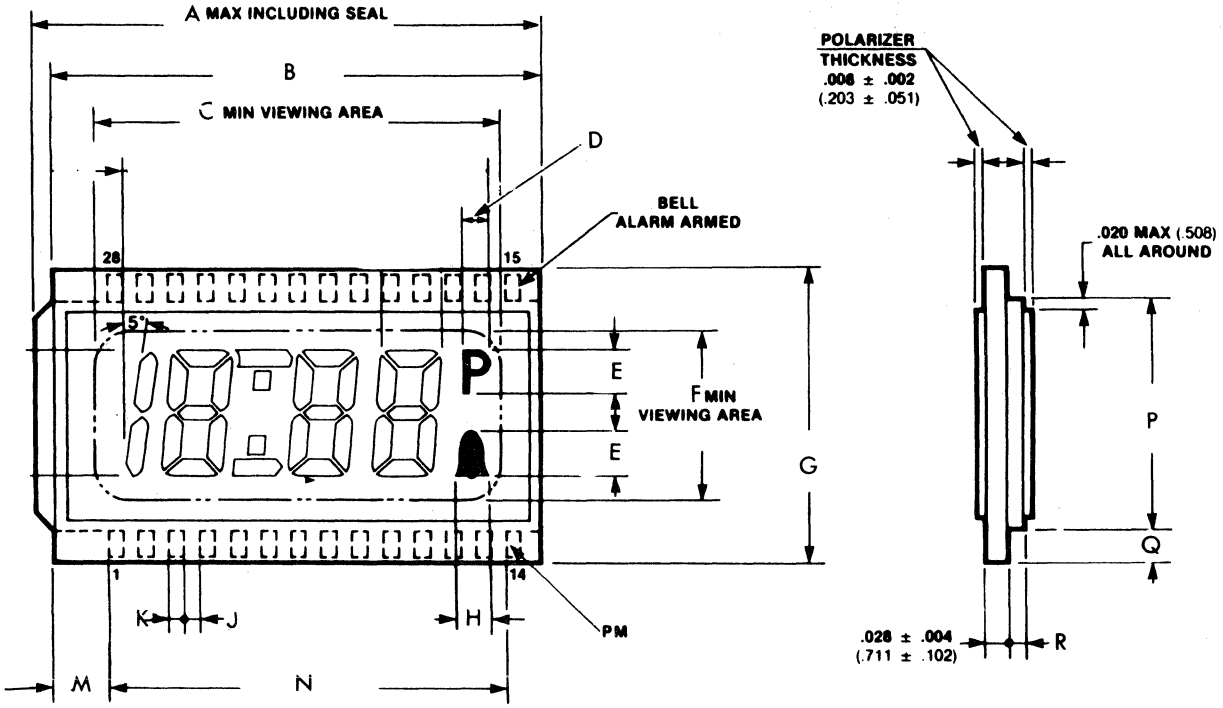

	A	B	C	D	E	F	G	H	J	K	M	N	P	Q	R
PY996	.603	.590	.490	.030	.060	.215	.354	.040	.023	.015	.060	.494	.276	.039	.020
PY996a	.825	.808	.709	.045	.073	.350	.520	.080	.028	.030	.020	.754	.420	.050	.028

49. OUTLINE DRAWINGS

PY1003

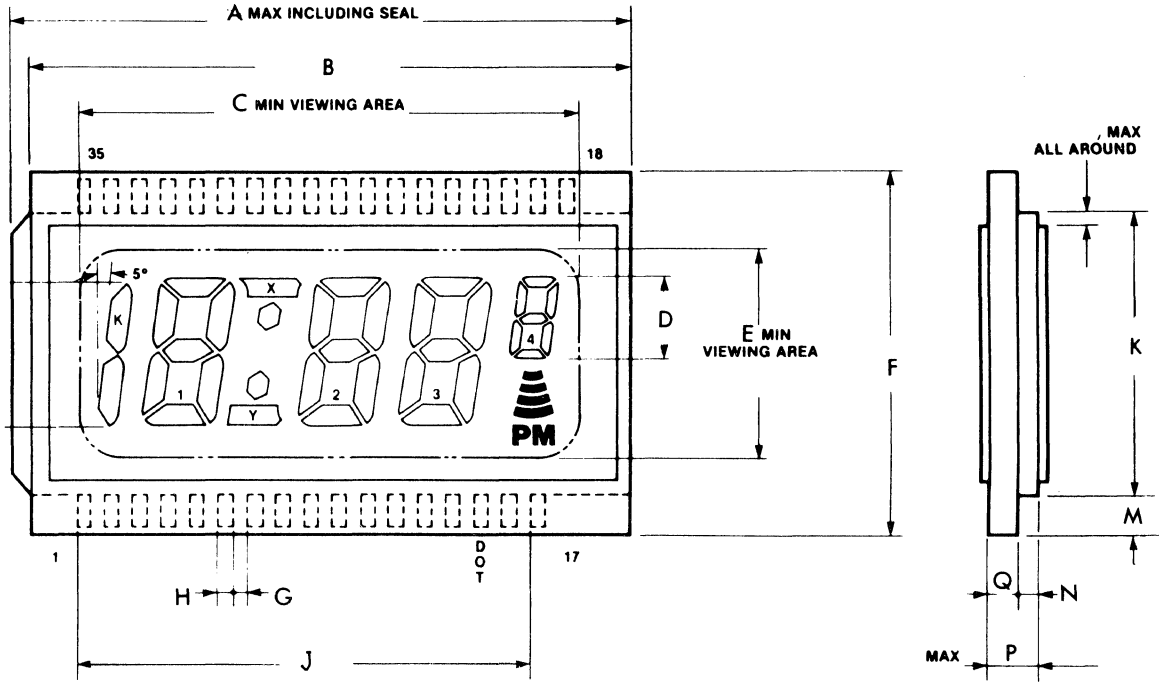

	A	B	C	D	E	F	G	H	J	K	M	N	P	Q	R
PY1003	.603	.590	.490	.085	.215	.354	.015	.015	.480	.276	.039	.020	.056	.028	.020
PY1003a	.825	.808	.709	.120	.350	.520	.022	.022	.704	.420	.050	.028	.064	.028	.020

PY1005

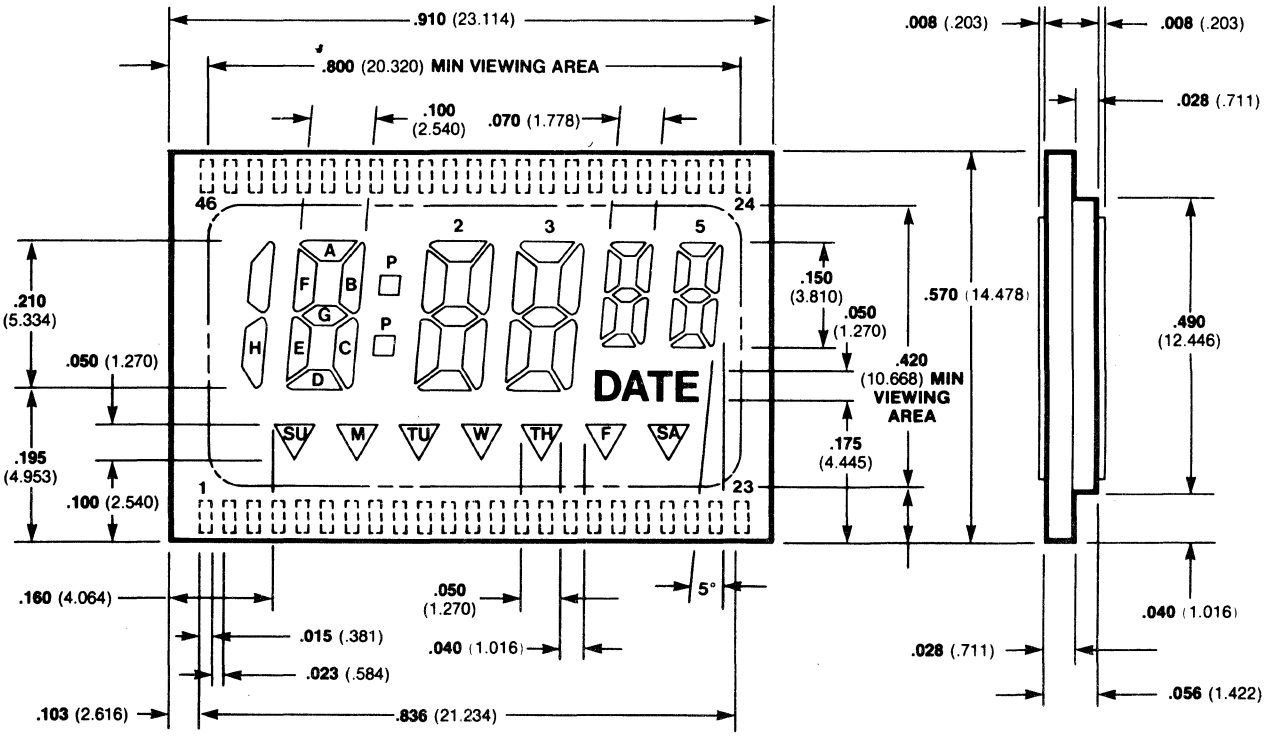

49. OUTLINE DRAWINGS

PY1011

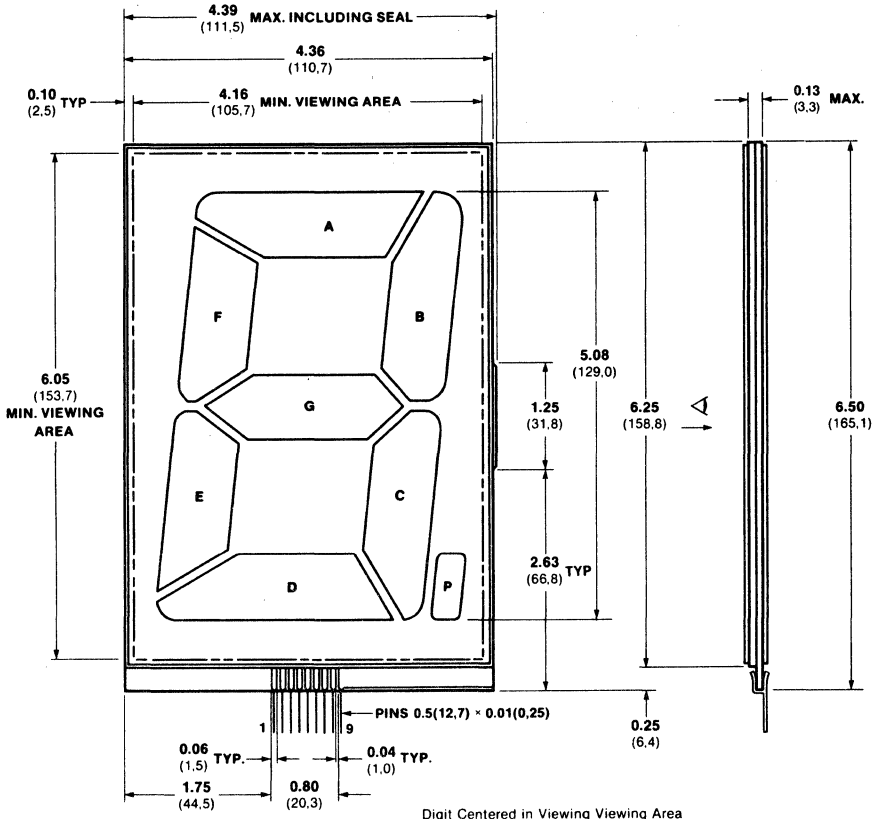

PIN	1	2	3	4	5	6	7	8	9
SEG.	A	F	G	E	D	D.P.	C	B	B.P.

PY1012

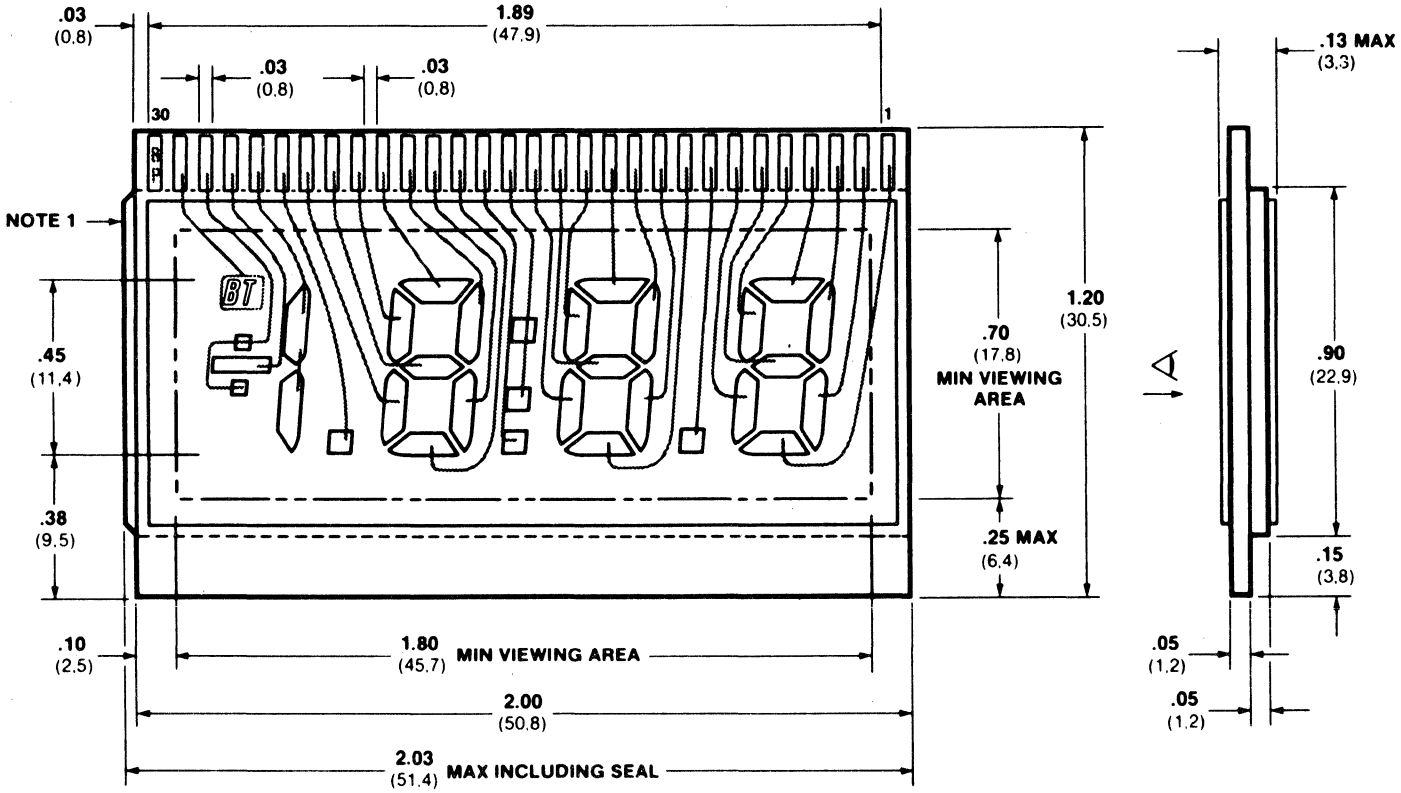

NOTE 1. SOLDER SEAL NOT TO EXCEED WIDTH OF BACK GLASS

49. OUTLINE DRAWINGS

PY1013

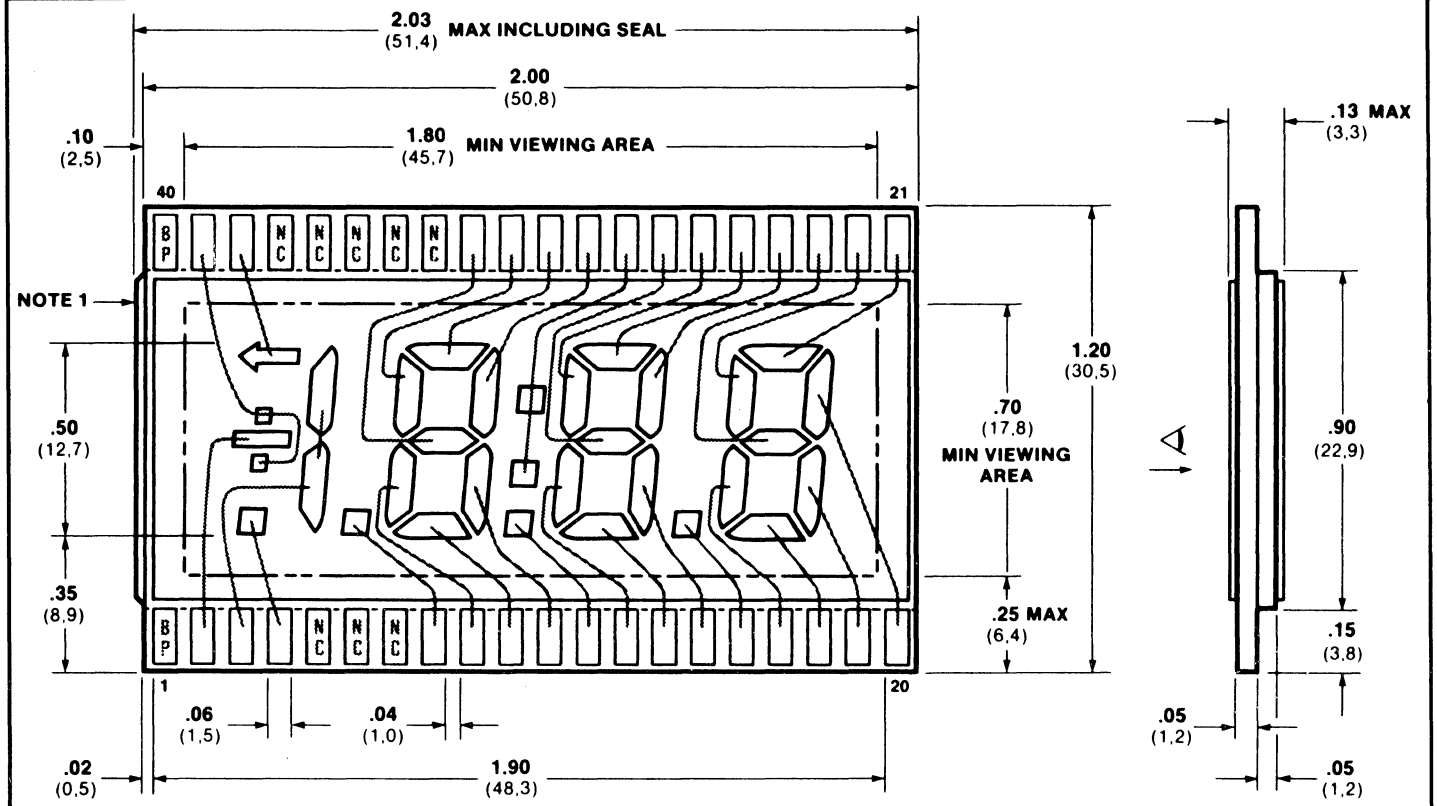

PY1013a

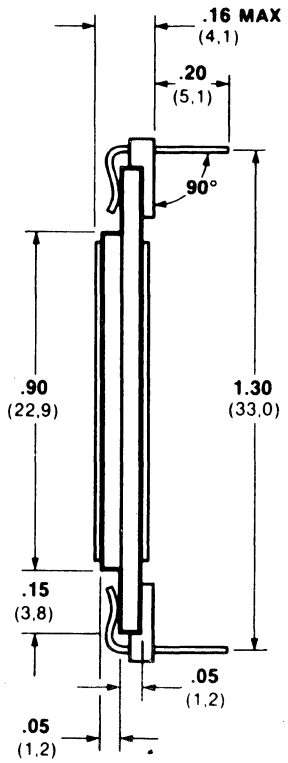

PY1013b

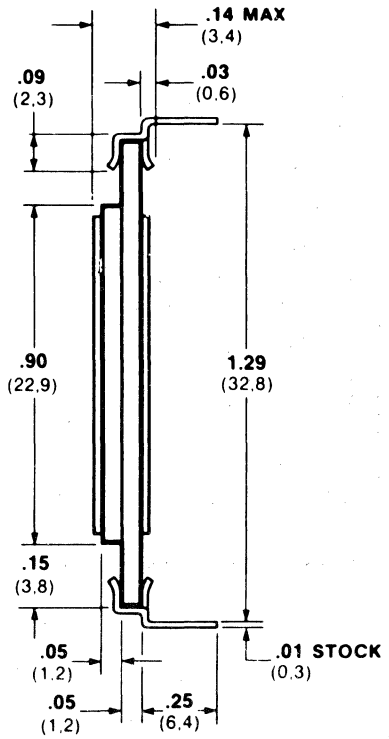

49. OUTLINE DRAWINGS

PY1014

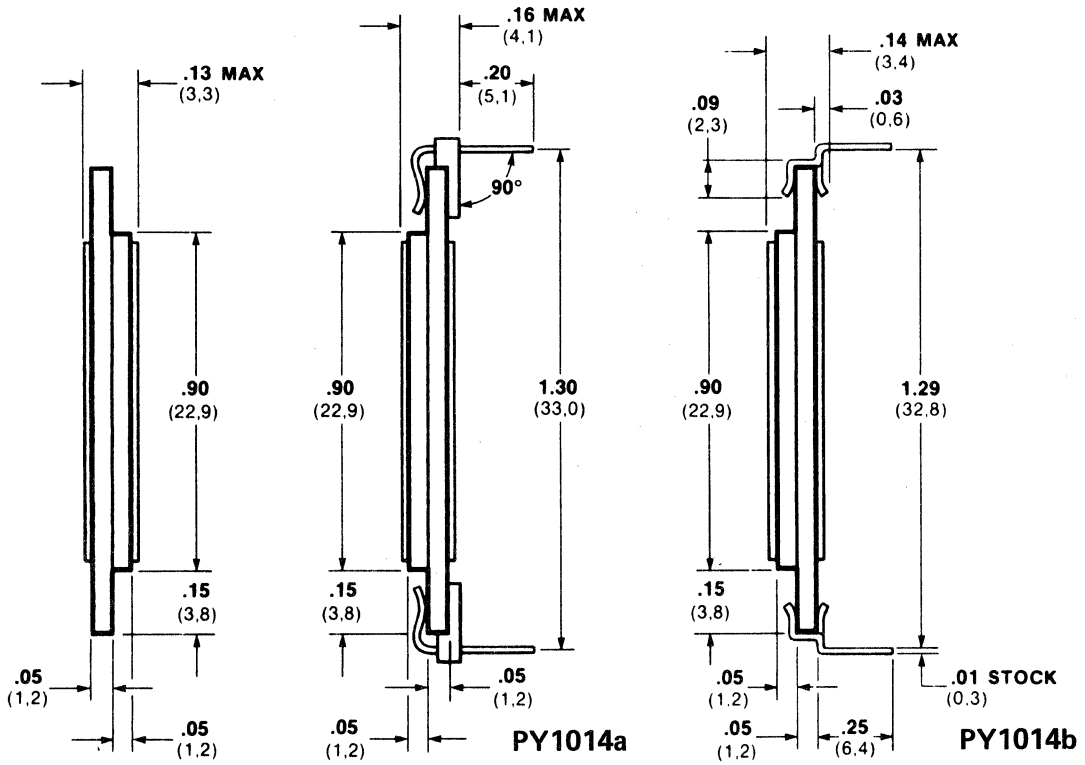

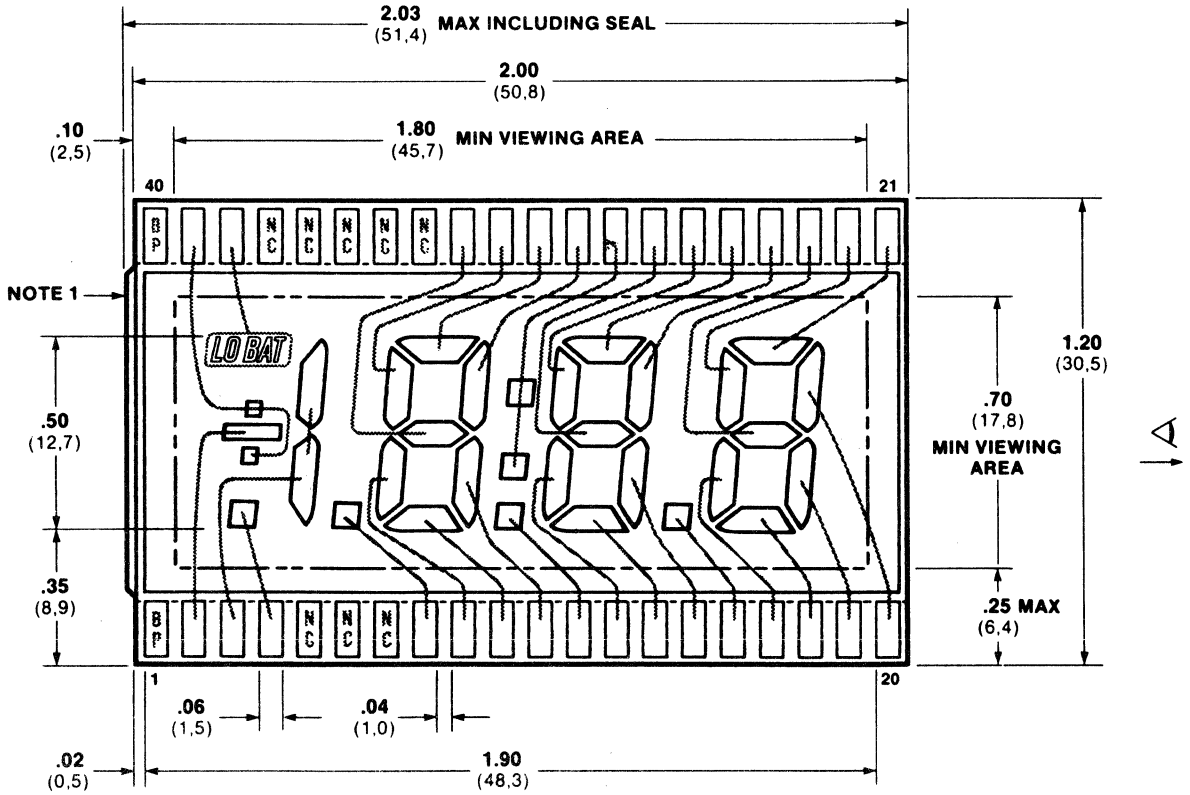

49. OUTLINE DRAWINGS

PY1017

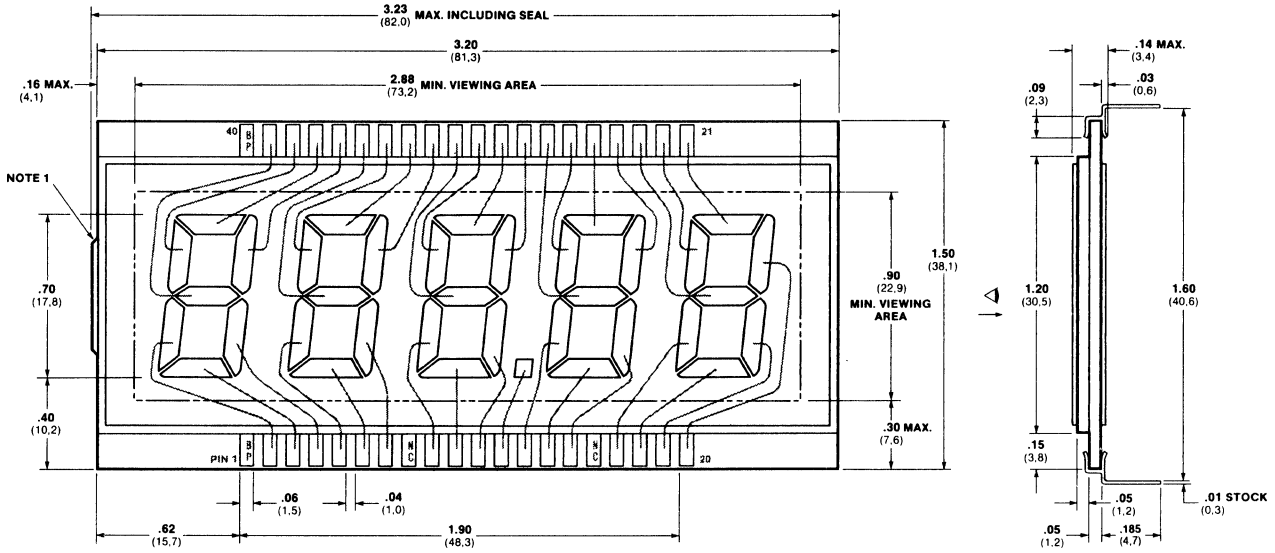

PY1019

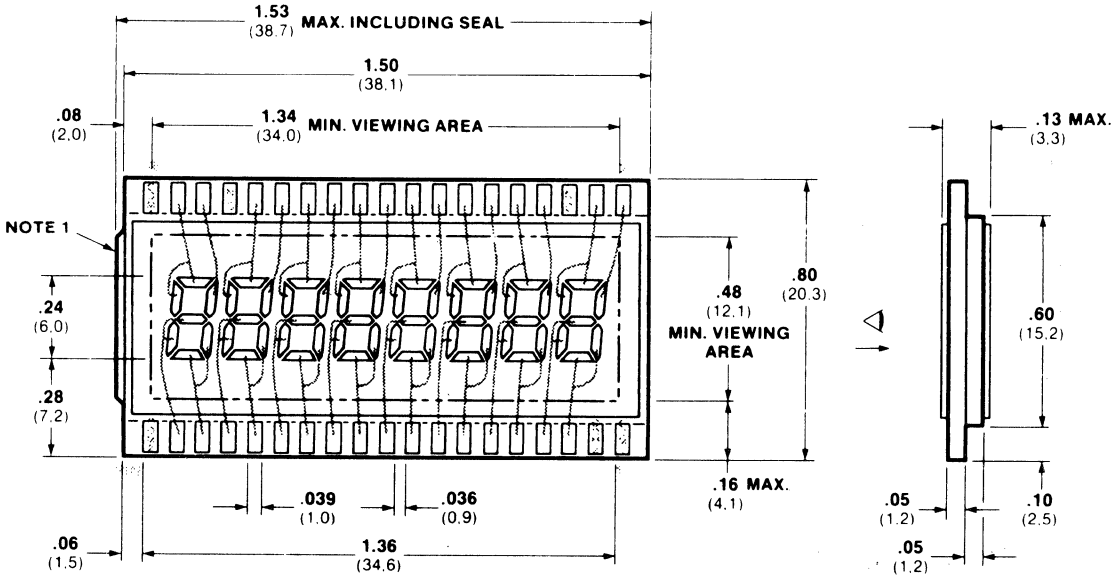

49. OUTLINE DRAWINGS

PY1021

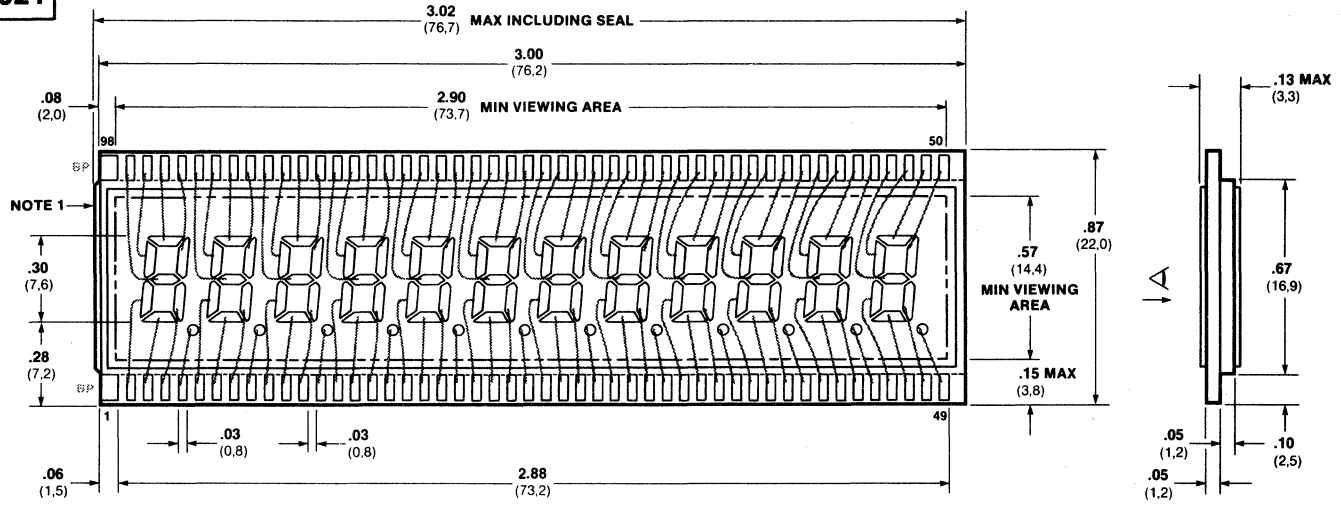

PY1022

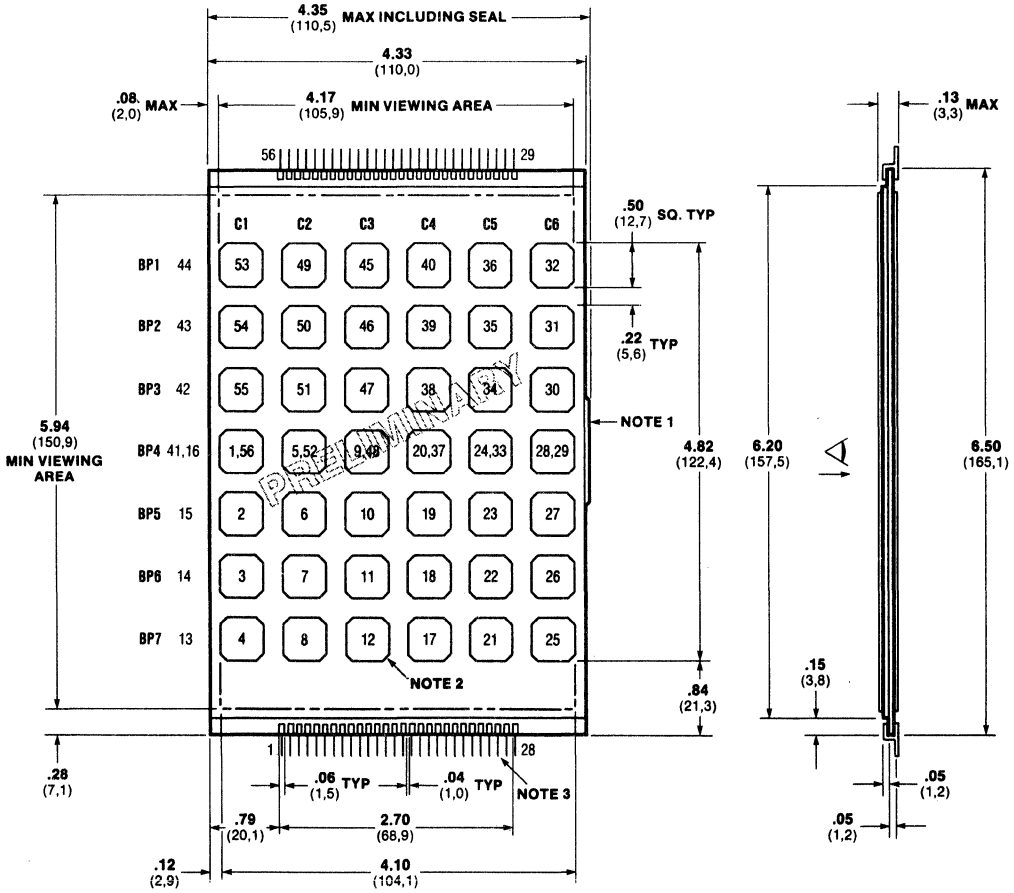

NOTES: 1. SOLDER SEAL NOT TO EXCEED WIDTH OF BACK GLASS.
2. PIN NUMBERS SHOWN INSIDE SQUARES.
3. PINS ARE .02 × .01 EPOXIED IN PLACE, .10 CENTERS.

49. OUTLINE DRAWINGS

PY1023

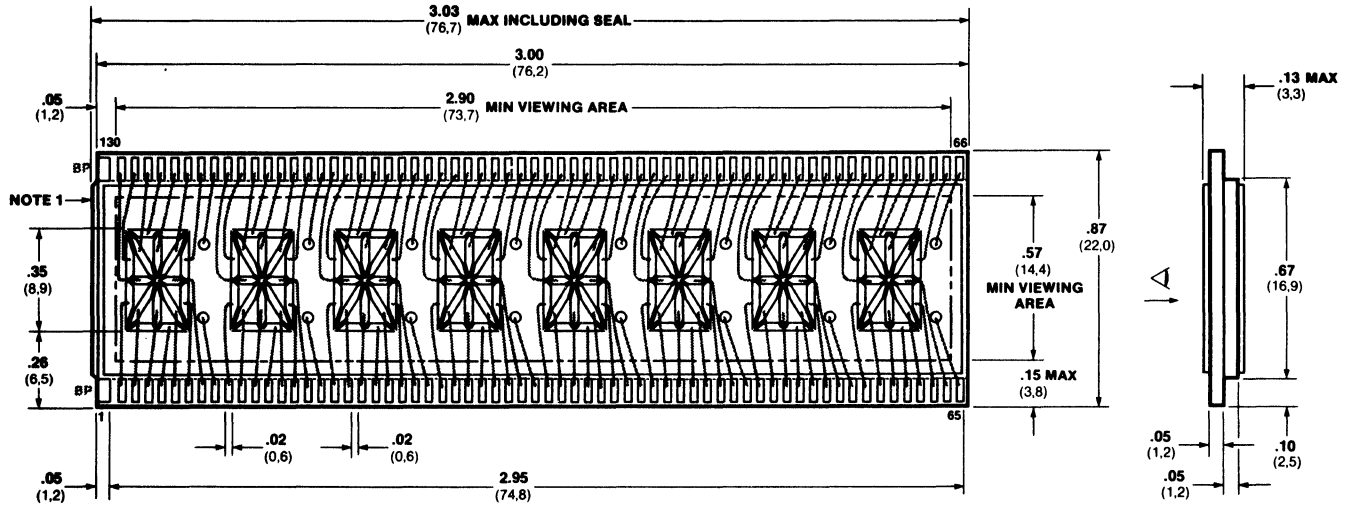

PY1024

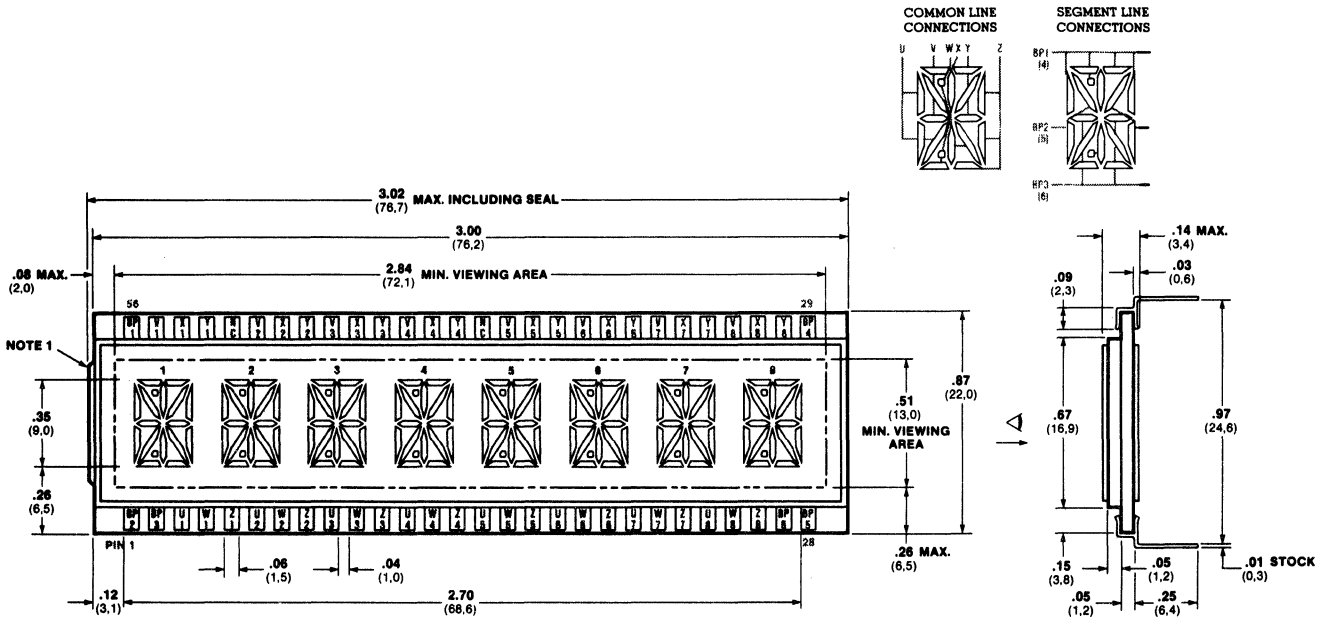

49. OUTLINE DRAWINGS

PY1025

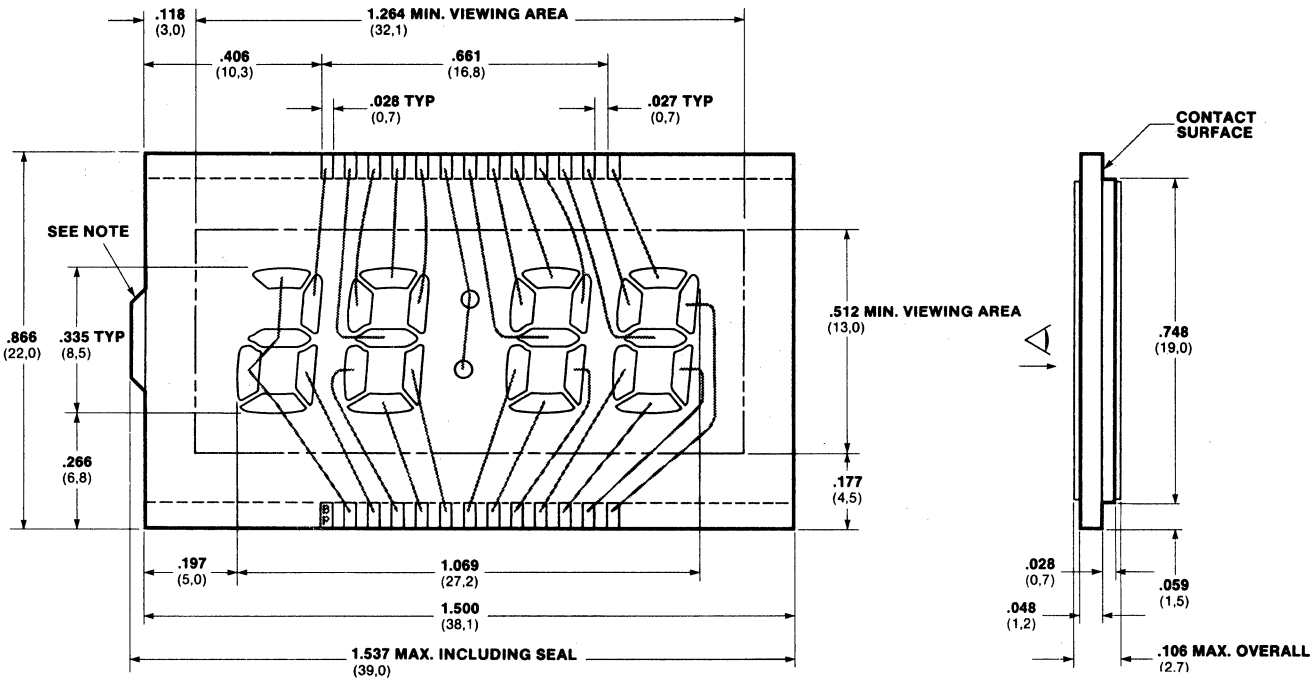

PY1026

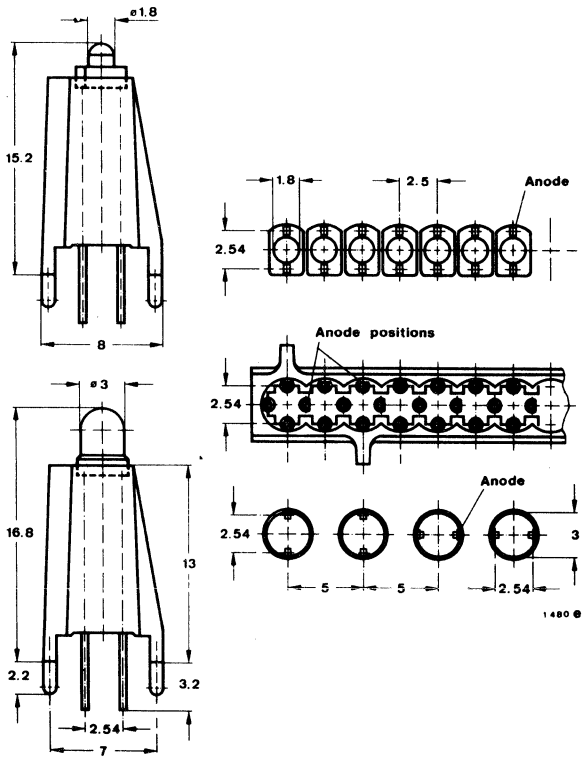

PY1027

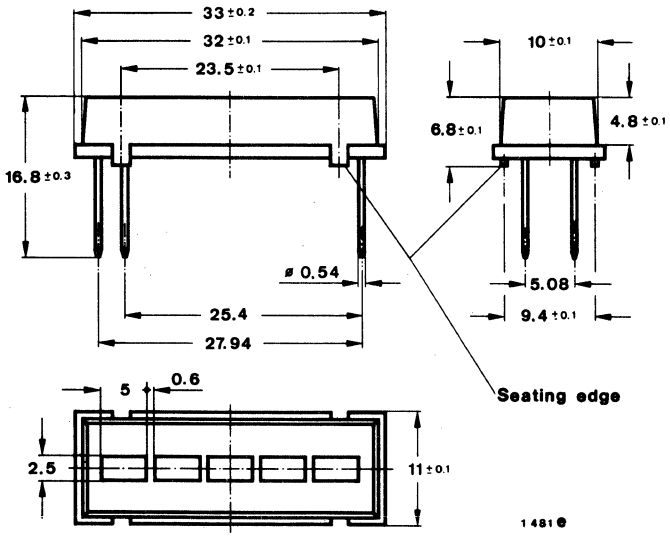

49. OUTLINE DRAWINGS

PY1028

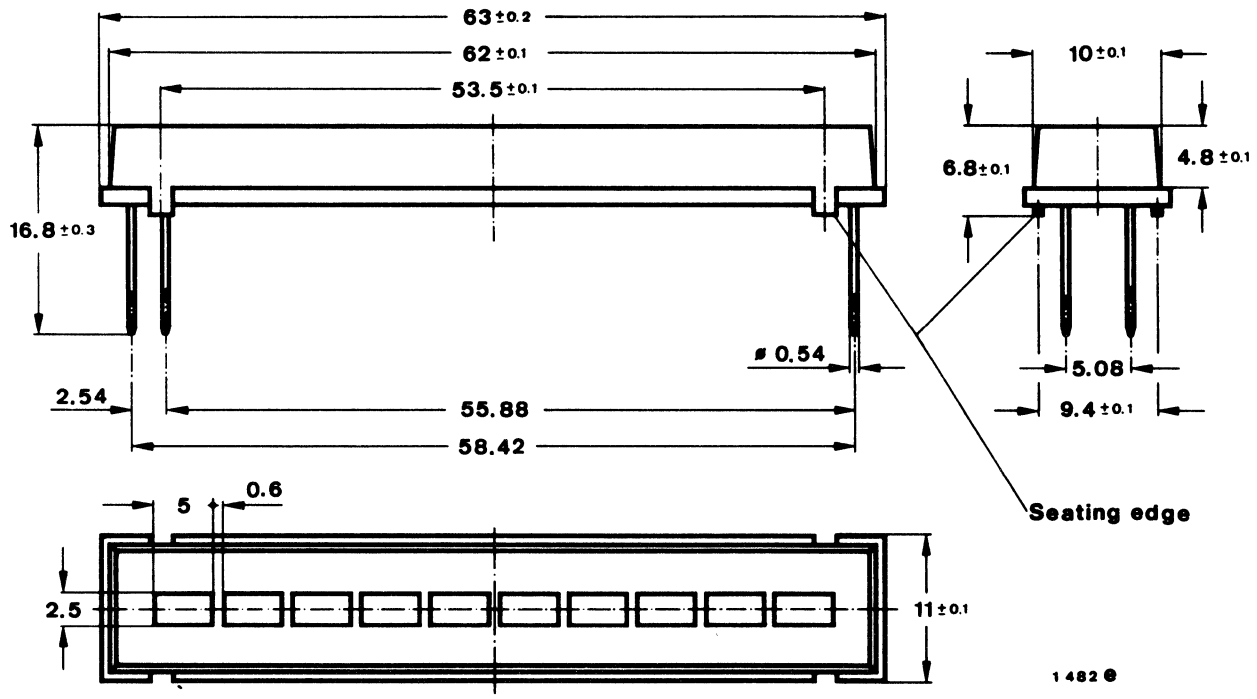

PY1030

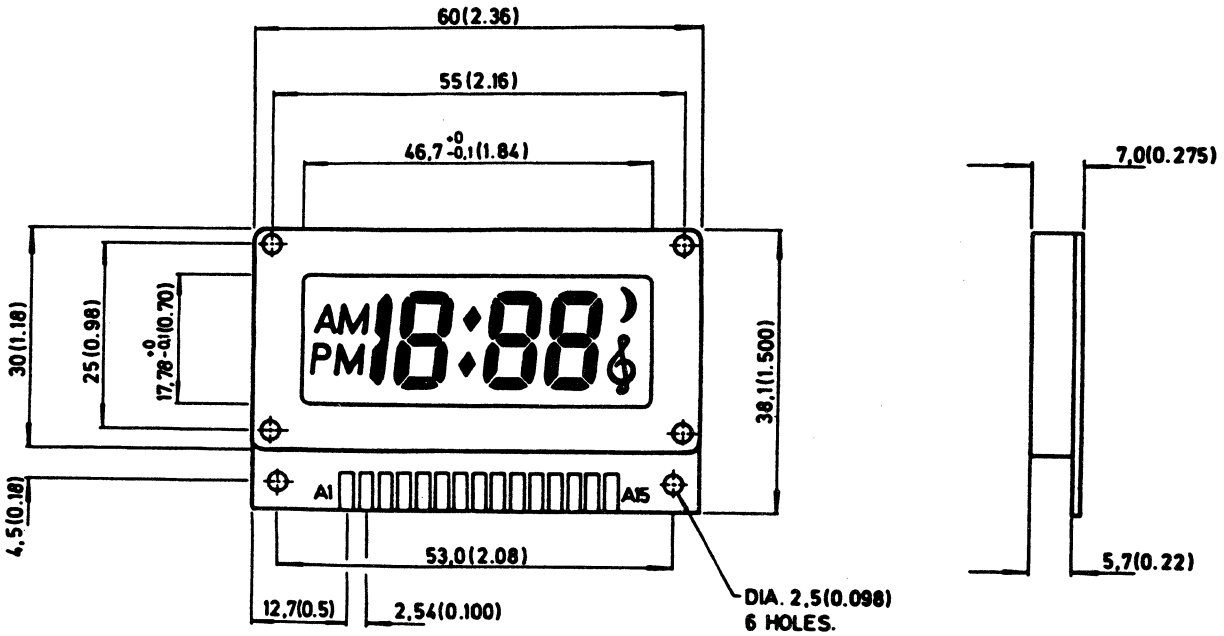

49. OUTLINE DRAWINGS

PY1034

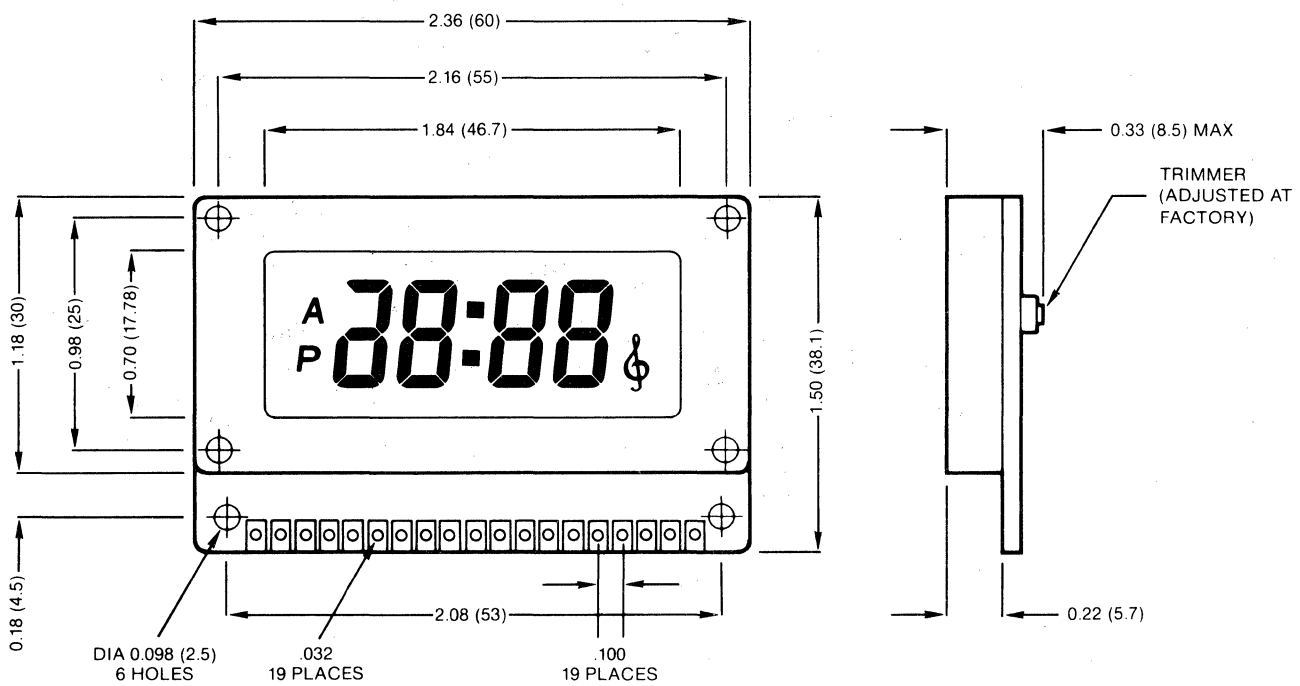

PY1037

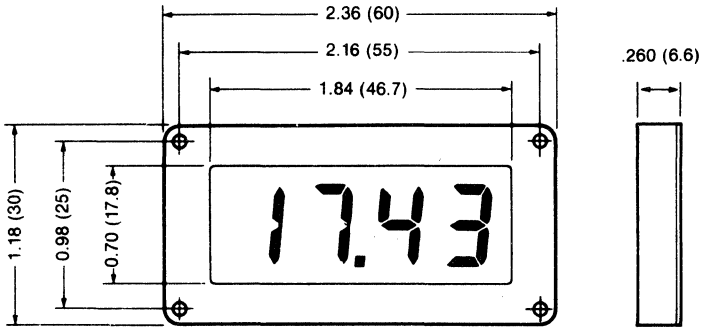

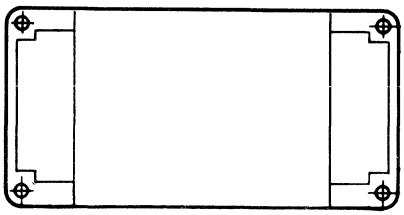

49. OUTLINE DRAWINGS

PY1060

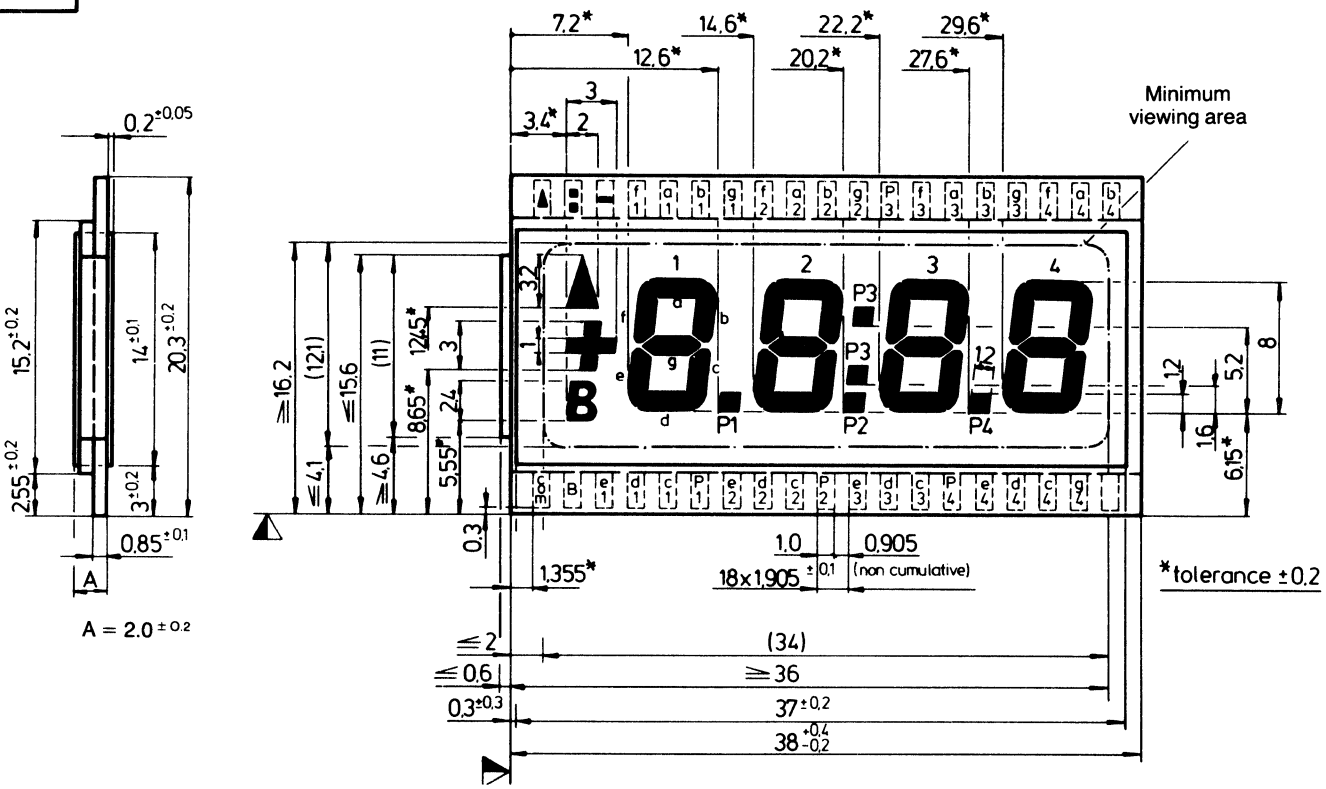

PY1094

NOTE: SEE PY1102 FOR MODIFICATION SUFFIXES

BAR GRAPH — 20 BARS PER ROW 2 ROWS DIRECT DRIVE

BAR HEIGHT
0.30" (7.6)

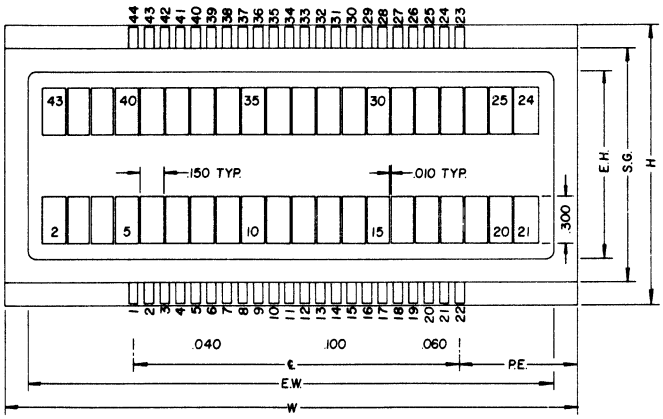

NOTE:
1, 22, 23 & 44 are Common Plane Connections

W	H	EW	EH	DH	DW	DS	SG	℄	PE	SH	DES
WIDTH	HEIGHT	EFFECTIVE WIDTH	EFFECTIVE HEIGHT	DIGIT HEIGHT	DIGIT WIDTH	DIGIT SPACING	SMALLER GLASS HEIGHT	PIN-ROW LENGTH	END-PIN TO GLASS EDGE	SYMBOL HEIGHT	DESCRIPTOR (IF ANY)
3.70 (93.9)	1.80 (45.7)	3.325 (84.5)	1.130 (28.7)	0.300 (7.6)	0.150 (3.8)	0.010 (0.3)	1.50 (38.1)	2.10 (53.3)	0.755 (19.2)	–	–

[NOMINAL DIMENSIONS IN INCHES (millimeters)]
NOTE. "EW" (Effective Width) and "EH" (Effective Height) are bezel opening dimensions

49. OUTLINE DRAWINGS

PY1197

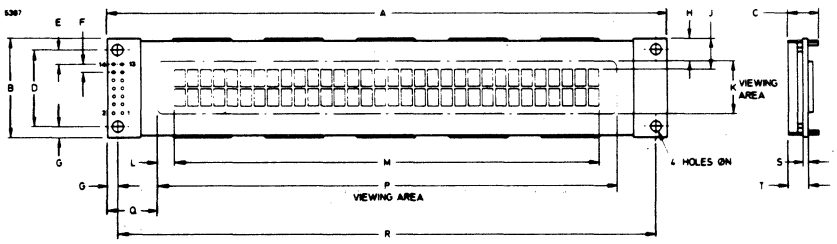

Character Format

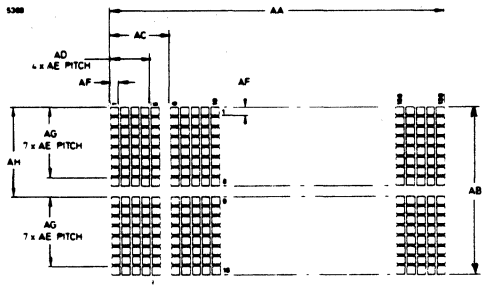

Ref	Millimetres	Inches	Ref	Millimetres	Inches	Ref	Millimetres	Inches
A	174.5	6.870	K	16.5	0.650	AA	132.05	5.199
B	31.0	1.220	L	4.07	0.160	AB	11.7	0.461
C	9.8 max	0.386 max	M	132.05	5.199	AC	4.15	0.163
D	24.0	0.945	N	3.5	0.138	AD	2.8	0.110
E	4.5	0.177	P	141.0	5.551	AE	0.7	0.028
F	2.54	0.100	Q	20.15	0.793	AF	0.6	0.024
G	3.5	0.138	R	167.5	6 594	AG	4.9	0.193
H	7.25	0.285	S	1.6	0.063	AH	6.2	0.244
J	9.65	0.380	T	6.3 max	0.248 max			

49. OUTLINE DRAWINGS

PY1041

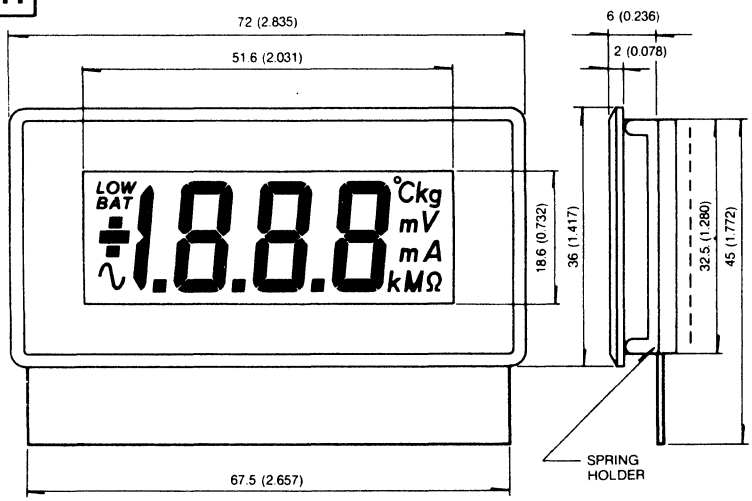

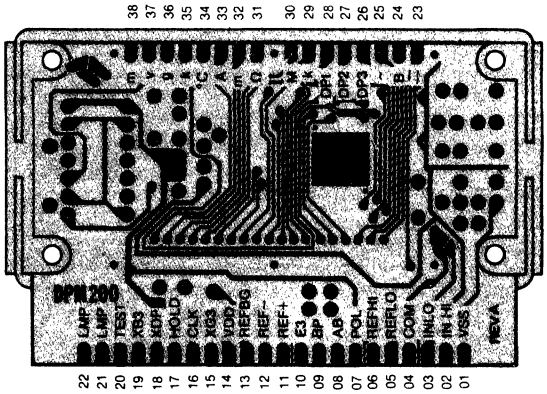

PY1042

A

B

C

D

E

F

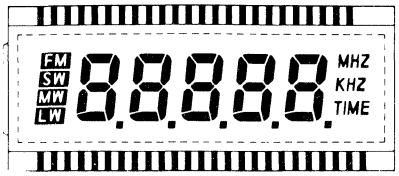

G

H

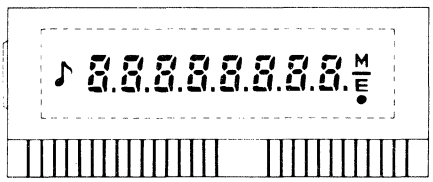

J

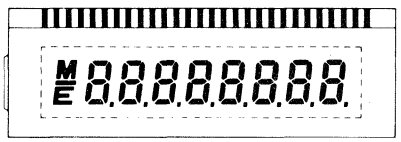

K

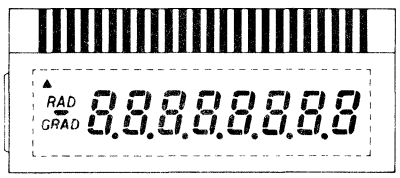

M

SUFFIX	A	B	C	D	E	F	G	H	I
PY1042a	.638	.735	.808	.350	.420	.520	.029	.058	.062
PY1042b	.418	.535	.591	.220	.276	.354	.019	.038	.062
PY1042c	.039	.823	.941	.256	.374	.453	.020	.039	.062
PY1042d	.036	.856	.950	.378	.472	.560	.017	.036	.062
PY1042e	.693	.737	.807	.287	.357	.457	.035	.063	.062
PY1042f	.650	.870	.943	.350	.420	.520	.025	.050	.062
PY1042g	1.70	1.929	2.047	.571	.669	.866	.036	.071	.118
PY1042h	.036	.830	.940	.380	.482	.560	.018	.036	.062
PY1042j	2.017	1.857	2.225	.438	.700	.900	.016	.067	.062
PY1042k	.063	1.693	2.047	.394	.583	.681	.031	.063	.114
PY1042m		1.799	2.047	.461	.630	.866	.039	.071	.114

49. OUTLINE DRAWINGS

PY1043

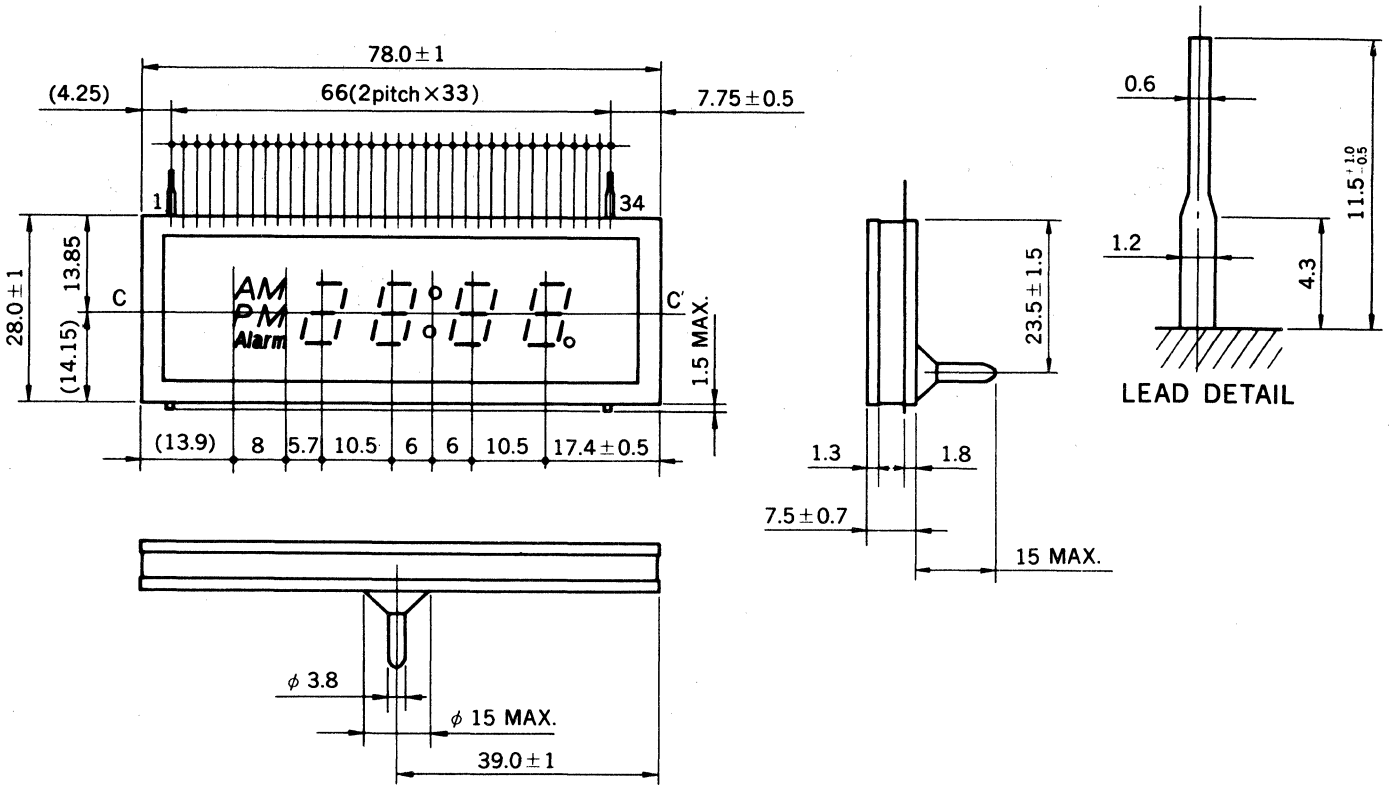

PY1044

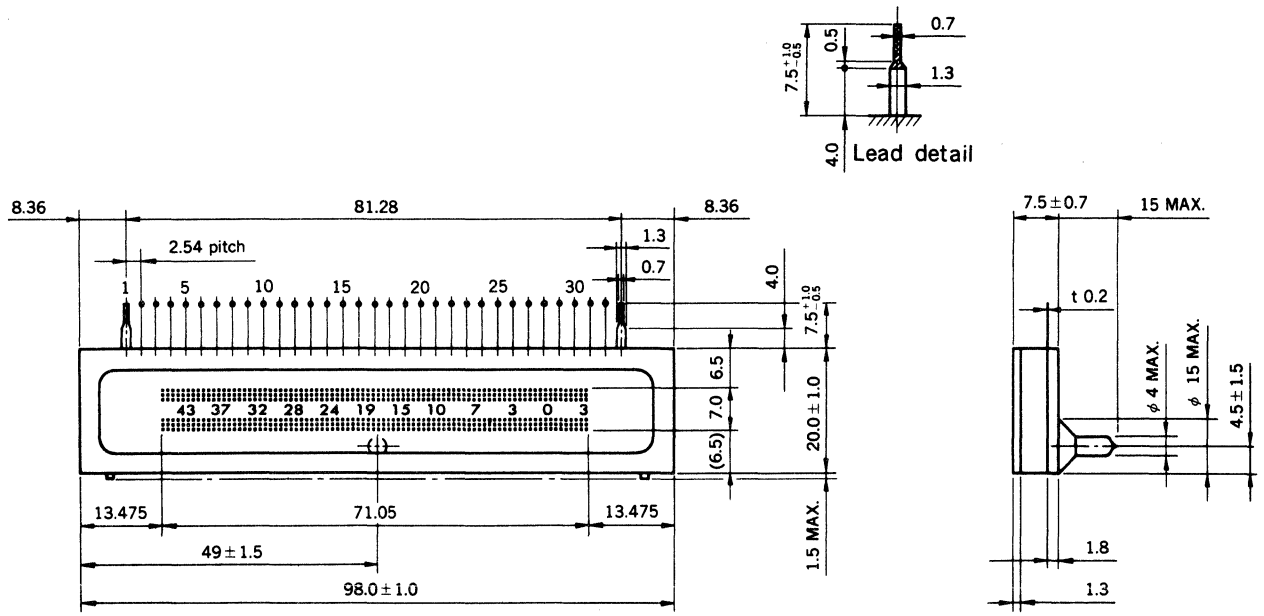

49. OUTLINE DRAWINGS

PY1045

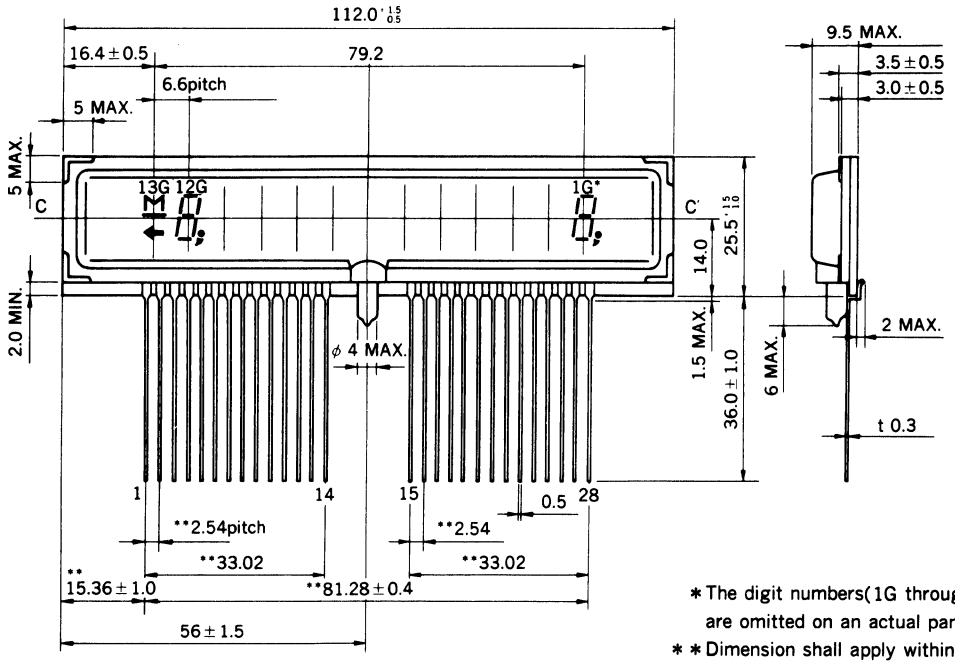

* The digit numbers(1G through 13G) are omitted on an actual panel.
* * Dimension shall apply within 3 mm from the base of glass.

PY1046

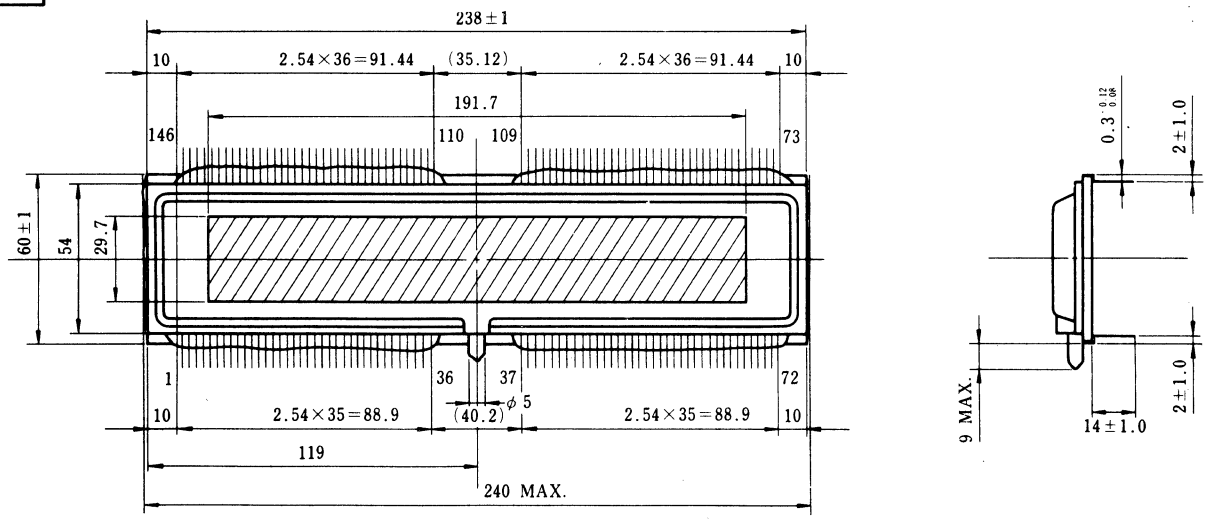

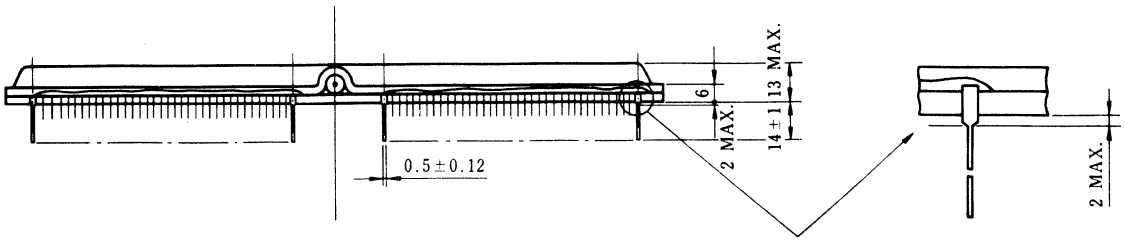

49. OUTLINE DRAWINGS

PY228

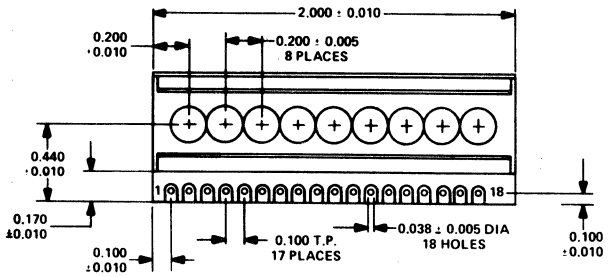

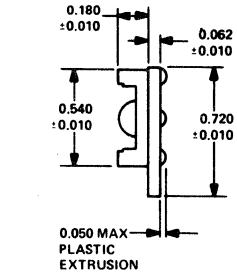

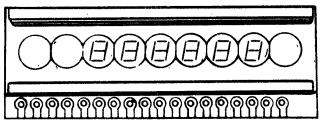

PY228

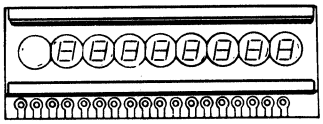

PY228a,c,e

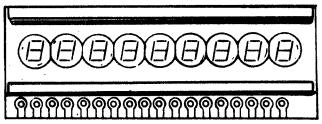

PY228b,d,f

	A	B	DEG
PY228	.102	.062	7.5
PY228a	.102	.062	7.5
PY228b	.102	.062	7.5
PY228c	.110	.062	7.5
PY228d	.110	.062	7.5
PY228e	.105	.066	3.5
PY228f	.105	.066	3.5

MAGNIFIED
CHARACTER FONT

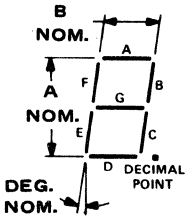

PY1050

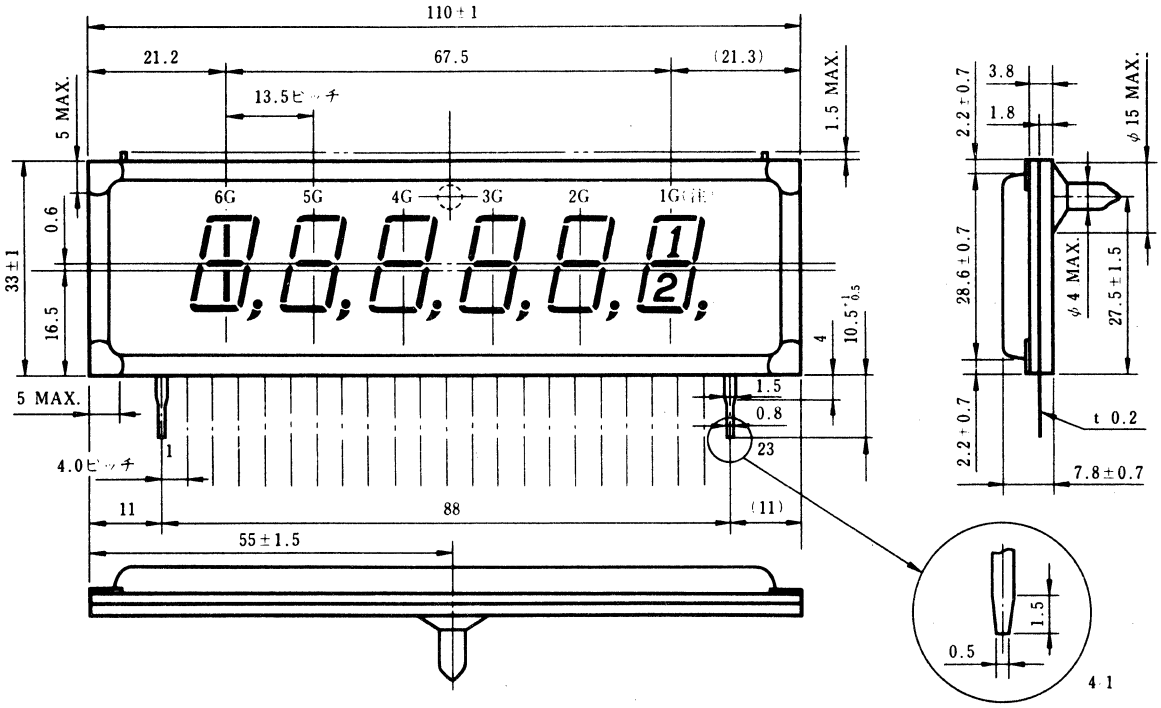

49. OUTLINE DRAWINGS

PY1079

NOTE: SEE PY1102 FOR MODIFICATION SUFFIXES

DISPLAY TYPE	W WIDTH	H HEIGHT	EW EFFECTIVE WIDTH	EH EFFECTIVE HEIGHT	DH DIGIT HEIGHT	DW DIGIT WIDTH	DS DIGIT SPACING	SG SMALLER GLASS HEIGHT	℄ PIN-ROW LENGTH	PE END-PIN TO GLASS EDGE	SH SYMBOL HEIGHT	DES DESCRIPTOR (IF ANY)
PY1079	1.10 (27.9)	1.20 (30.5)	0.830 (21.1)	0.630 (16.0)	0.50 (12.7)	0.260 (6.6)	0.130 (3.3)	0.90 (22.8)	0.80 (20.3)	0.150 (3.8)	–	–
PY1079a	1.50 (38.1)	1.50 (38.1)	1.230 (31.2)	0.890 (22.6)	0.70 (17.8)	0.360 (9.1)	0.180 (4.6)	1.20 (30.5)	0.80 (20.3)	0.350 (8.9)	–	–

(NOMINAL DIMENSIONS IN INCHES (millimeters))
NOTE: "EW" (Effective Width) and "EH" (Effective Height) are bezel opening dimensions

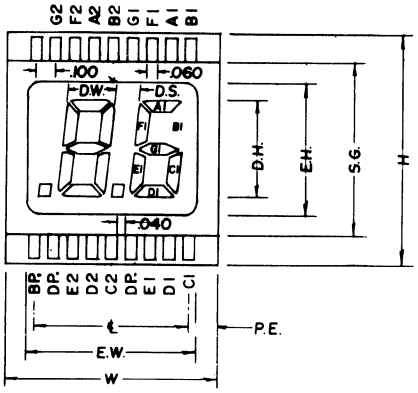

PY1039

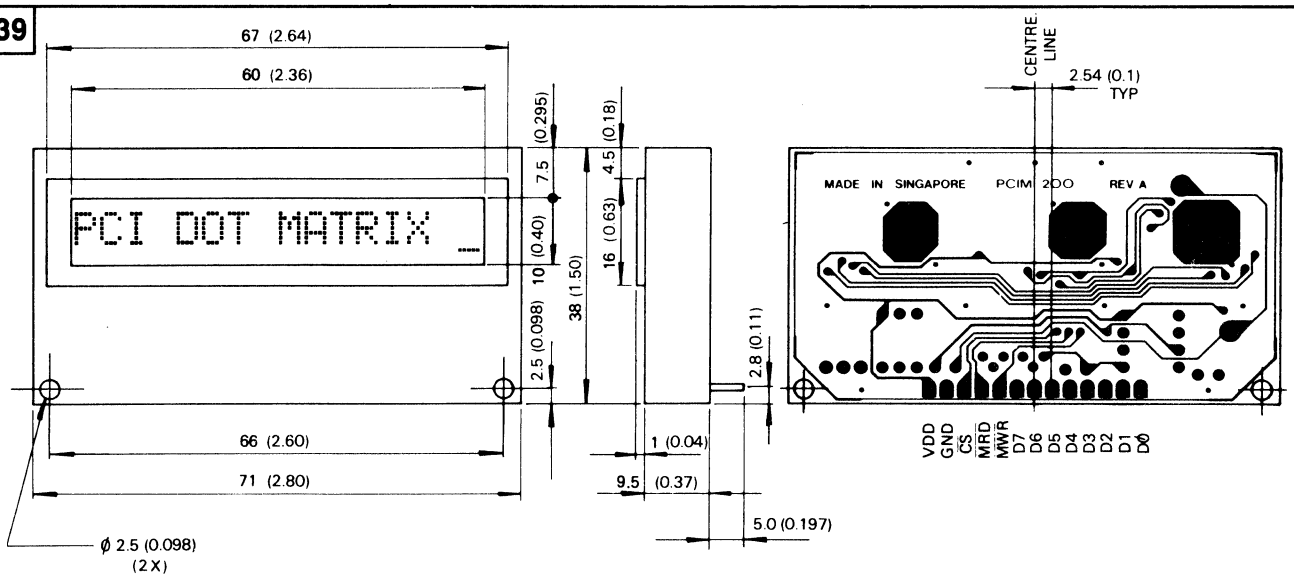

PY1040

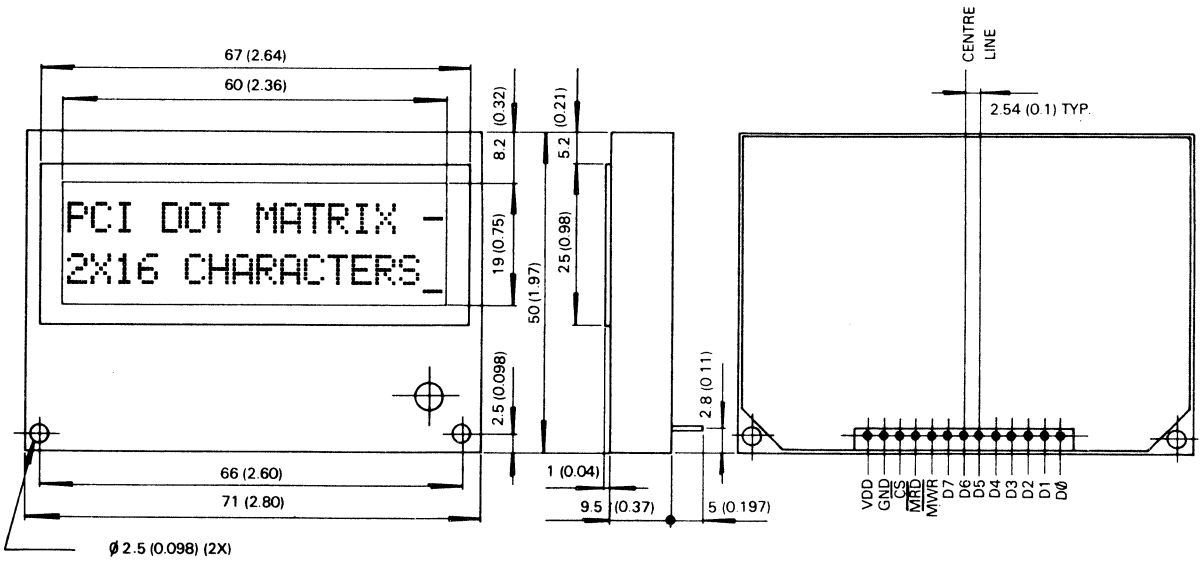

49. OUTLINE DRAWINGS

PY1087

NOTE: SEE PY1102 FOR MODIFICATION SUFFIXES

DISPLAY TYPE	W WIDTH	H HEIGHT	EW EFFECTIVE WIDTH	EH EFFECTIVE HEIGHT	DH DIGIT HEIGHT	DW DIGIT WIDTH	DS DIGIT SPACING	SG SMALLER GLASS HEIGHT	℄ PIN-ROW LENGTH	PE END-PIN TO GLASS EDGE	SH SYMBOL HEIGHT	DES DESCRIPTOR (IF ANY)
PY1087	2.50 (63.5)	0.90 (22.9)	2.03 (51.6)	0.43 (10.9)	0.35 (8.9)	0.180 (4.6)	0.130 (3.3)	0.70 (17.8)	2.40 (70.0)	0.050 (1.3)	–	–
PY1087a	2.75 (69.9)	1.20 (30.5)	2.38 (60.5)	0.63 (16.0)	0.50 (12.7)	0.26 (6.62	0.150 (3.8)	0.90 (22.9)	2.40 (70.0)	0.125 (3.2)	–	–
PY1087b	3.70 (94.0)	1.50 (38.1)	3.33 (84.6)	0.83 (21.1)	0.70 (17.8)	0.36 (9.1)	0.180 (4.6)	1.20 (30.5)	2.40 (70.0)	0.650 (16.5)	–	–

[NOMINAL DIMENSIONS IN INCHES (millimeters)]
NOTE: "EW" (Effective Width) and "EH" (Effective Height) are bezel opening dimensions

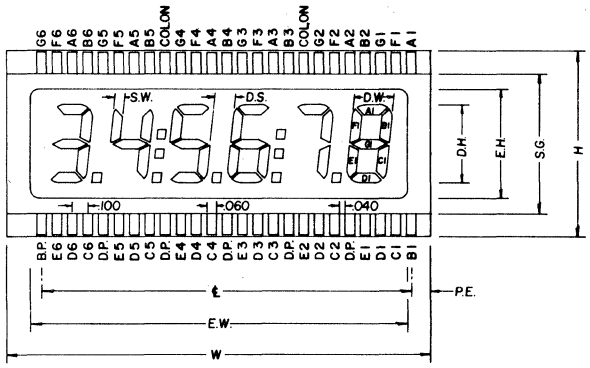

PY1088

NOTE: SEE PY1102 FOR MODIFICATION SUFFIXES

DISPLAY TYPE	W WIDTH	H HEIGHT	EW EFFECTIVE WIDTH	EH EFFECTIVE HEIGHT	DH DIGIT HEIGHT	DW DIGIT WIDTH	DS DIGIT SPACING	SG SMALLER GLASS HEIGHT	℄ PIN-ROW LENGTH	PE END-PIN TO GLASS EDGE	SH SYMBOL HEIGHT	DES DESCRIPTOR (IF ANY)
PY1088	3.70 (93.9)	1.20 (30.5)	3.330 (84.5)	0.630 (16.0)	0.50 (12.7)	0.260 (6.6)	0.160 (4.1)	0.90 (22.9)	3.30 (83.8)	0.125 (3.2)	–	–

[NOMINAL DIMENSIONS IN INCHES (millimeters)]
NOTE: "EW" (Effective Width) and "EH" (Effective Height) are bezel opening dimensions

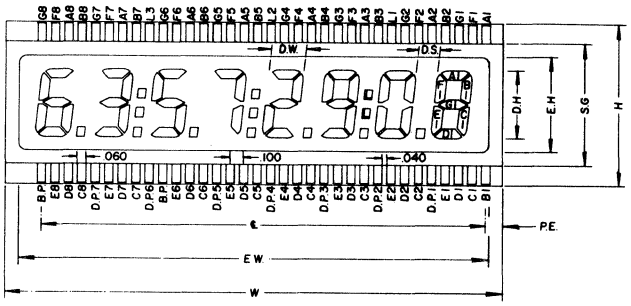

PY1093

NOTE: SEE PY1102 FOR MODIFICATION SUFFIXES

DISPLAY TYPE	W WIDTH	H HEIGHT	EW EFFECTIVE WIDTH	EH EFFECTIVE HEIGHT	DH DIGIT HEIGHT	DW DIGIT WIDTH	DS DIGIT SPACING	SG SMALLER GLASS HEIGHT	℄ PIN-ROW LENGTH	PE END-PIN TO GLASS EDGE	SH SYMBOL HEIGHT	DES DESCRIPTOR (IF ANY)
PY1093	2.00 (50.8)	1.20 (30.5)	1.730 (43.9)	0.630 (16.0)	0.50 (12.7)	.260 (6.6)	0.15 (3.8)	0.90 (22.8)	1.90 (48.3)	0.035 (0.89)	0.16 (4.1)	AM PM
PY1093a	2.75 (69.9)	1.50 (38.1)	2.38 (60.4)	0.83 (21.1)	0.70 (17.8)	0.36 (9.1)	0.23 (5.8)	1.20 (30.5)	1.90 (48.2)	0.43 (10.9)	0.250 (6.4)	AM PM

[NOMINAL DIMENSIONS IN INCHES (millimeters)]
NOTE: "EW" (Effective Width) and "EH" (Effective Height) are bezel opening dimensions

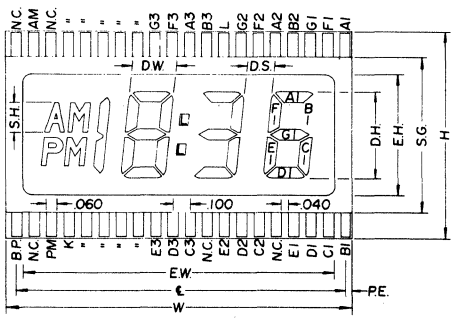

PY1090

NOTE: SEE PY1102 FOR MODIFICATION SUFFIXES

DISPLAY TYPE	W WIDTH	H HEIGHT	EW EFFECTIVE WIDTH	EH EFFECTIVE HEIGHT	DH DIGIT HEIGHT	DW DIGIT WIDTH	DS DIGIT SPACING	SG SMALLER GLASS HEIGHT	℄ PIN-ROW LENGTH	PE END-PIN TO GLASS EDGE	SH SYMBOL HEIGHT	DES DESCRIPTOR (IF ANY)
PY1090	3.70 (93.9)	1.50 (38.1)	3.43 (87.1)	0.930 (23.6)	0.70 (17.8)	0.500 (12.7)	0.424 (10.8)	1.20 (30.5)	3.20 (81.2)	0.125 (3.2)	–	–

[NOMINAL DIMENSIONS IN INCHES (millimeters)]
NOTE: "EW" (Effective Width) and "EH" (Effective Height) are bezel opening dimensions

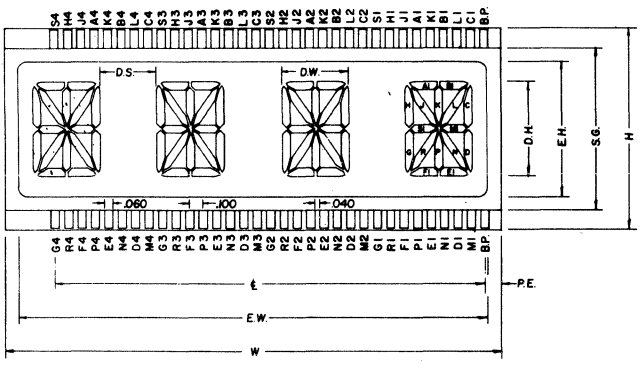

49. OUTLINE DRAWINGS

PY1051

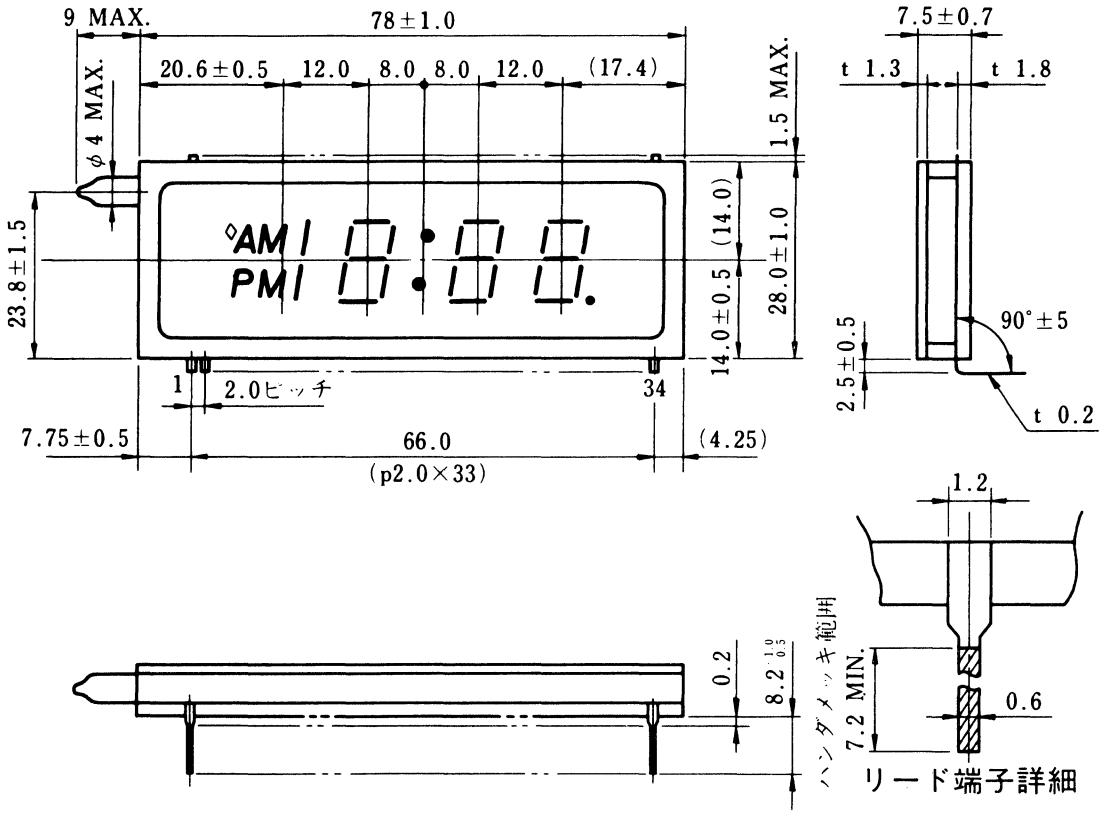

PY1052

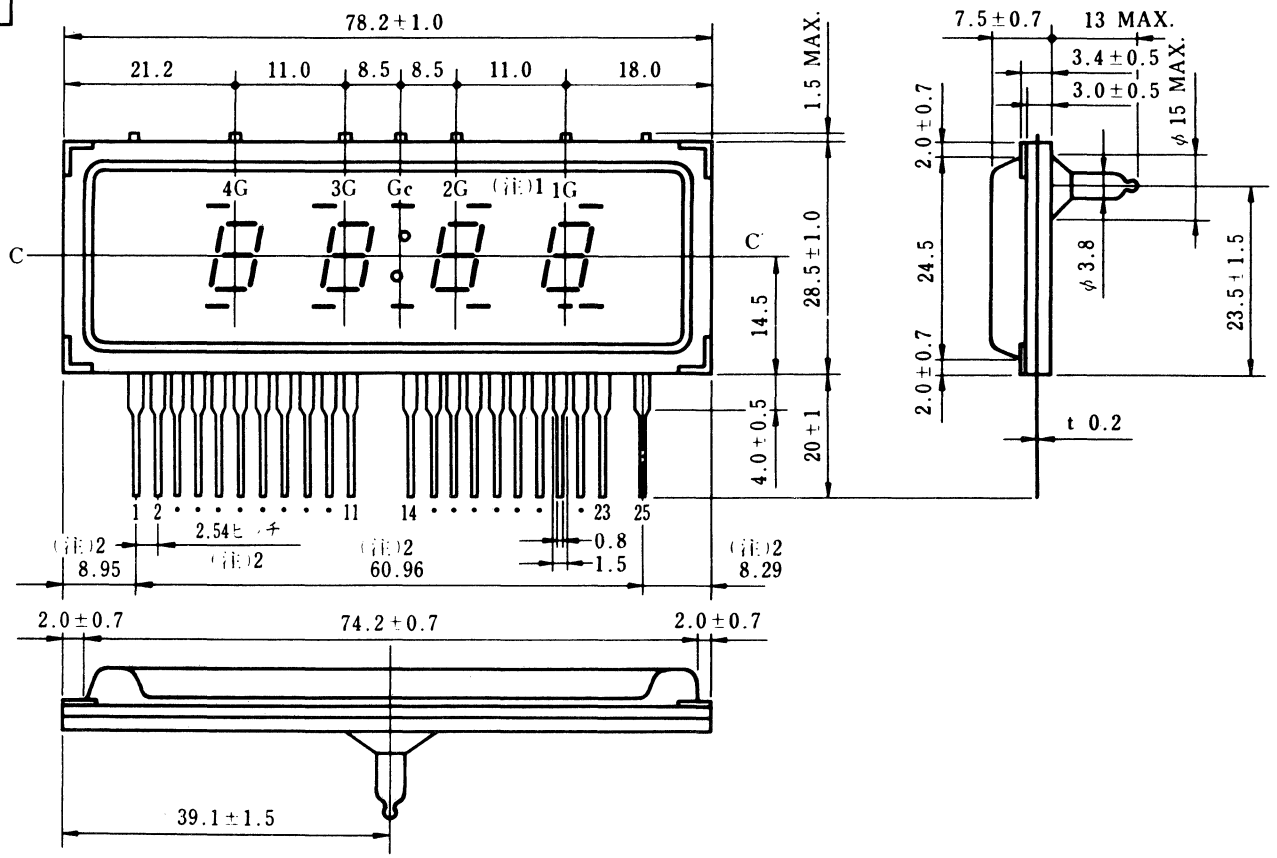

49. OUTLINE DRAWINGS

PY1052a

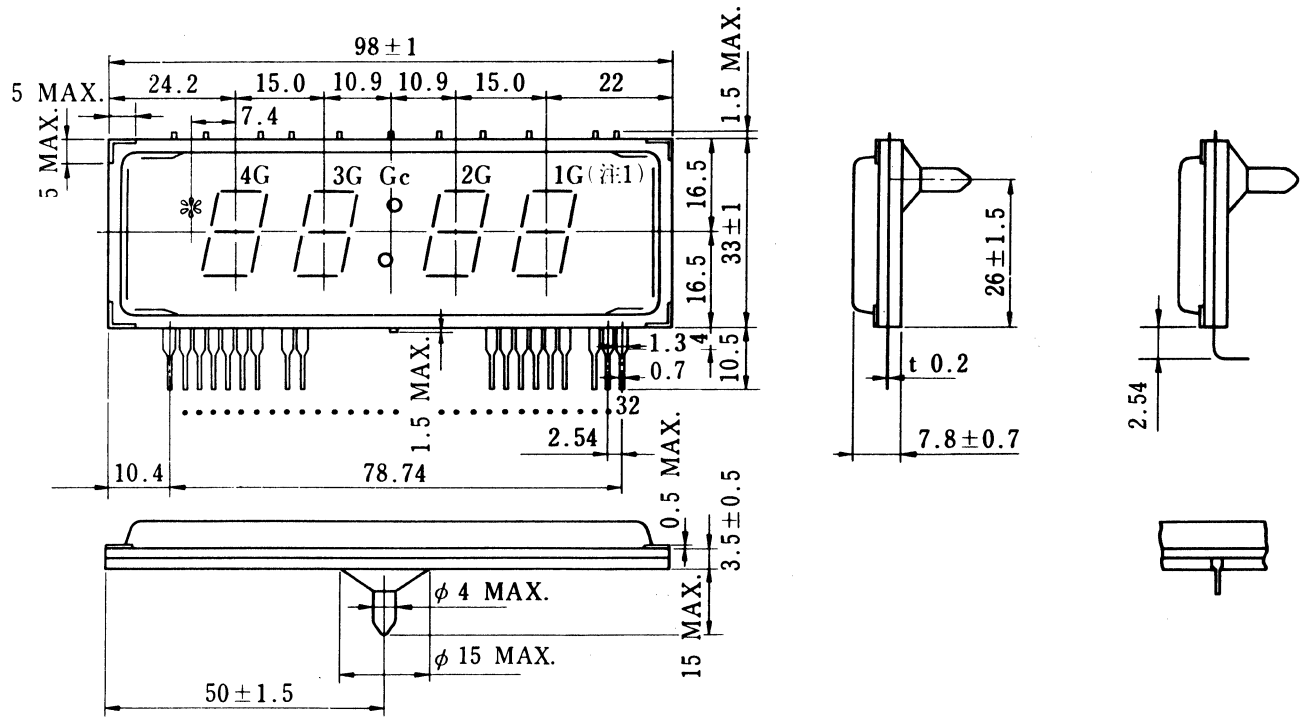

PY1053

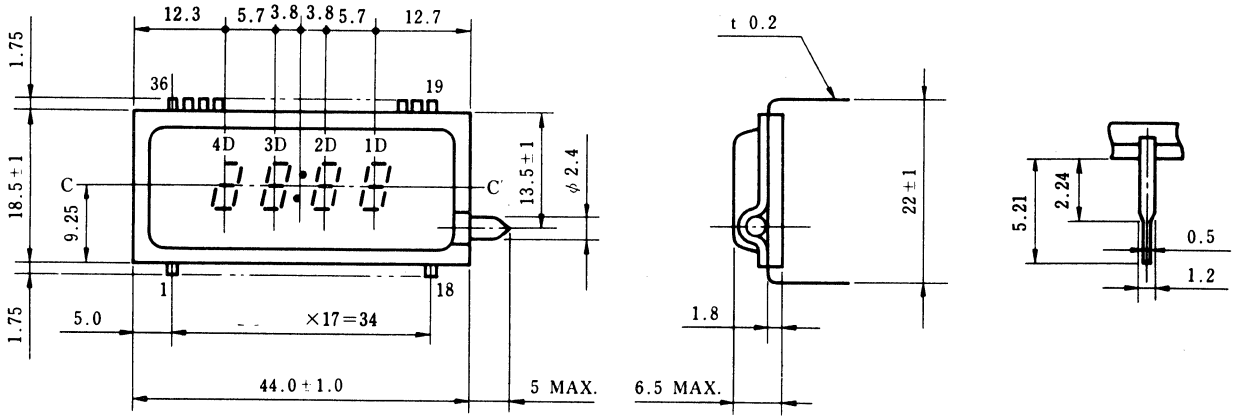

49. OUTLINE DRAWINGS

PY1054

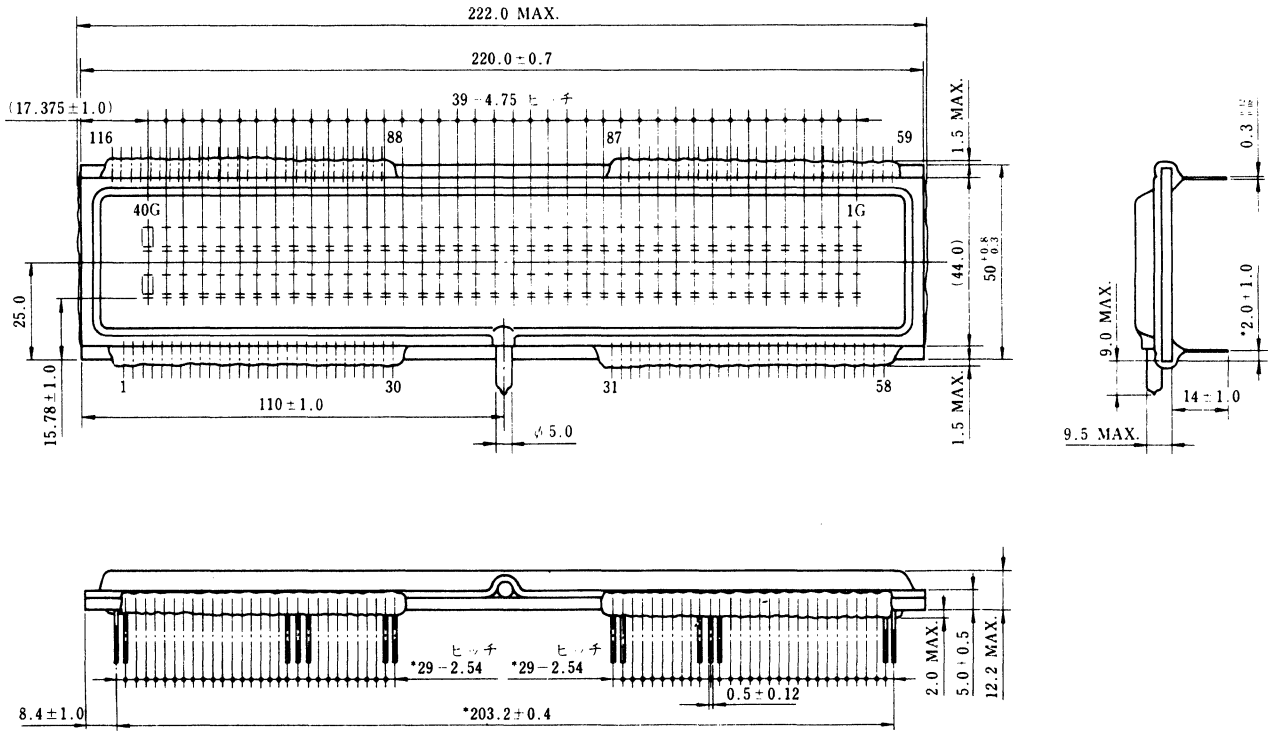

PY1055

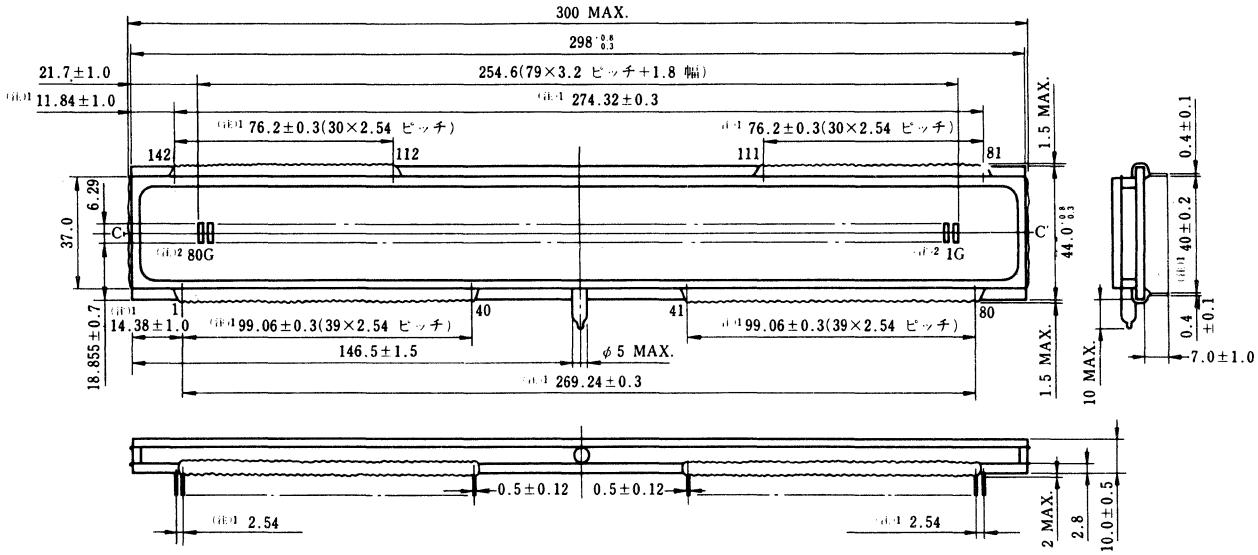

49. OUTLINE DRAWINGS

PY1056

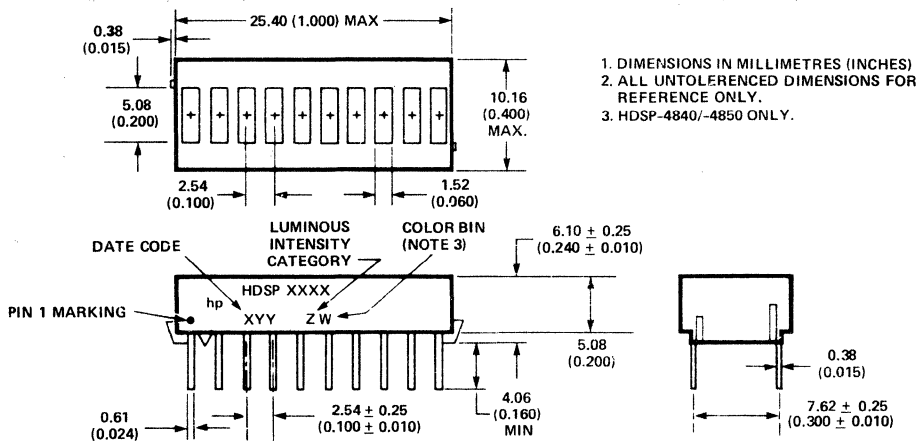

PY1058

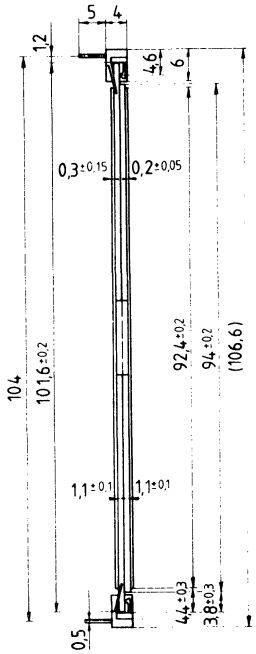

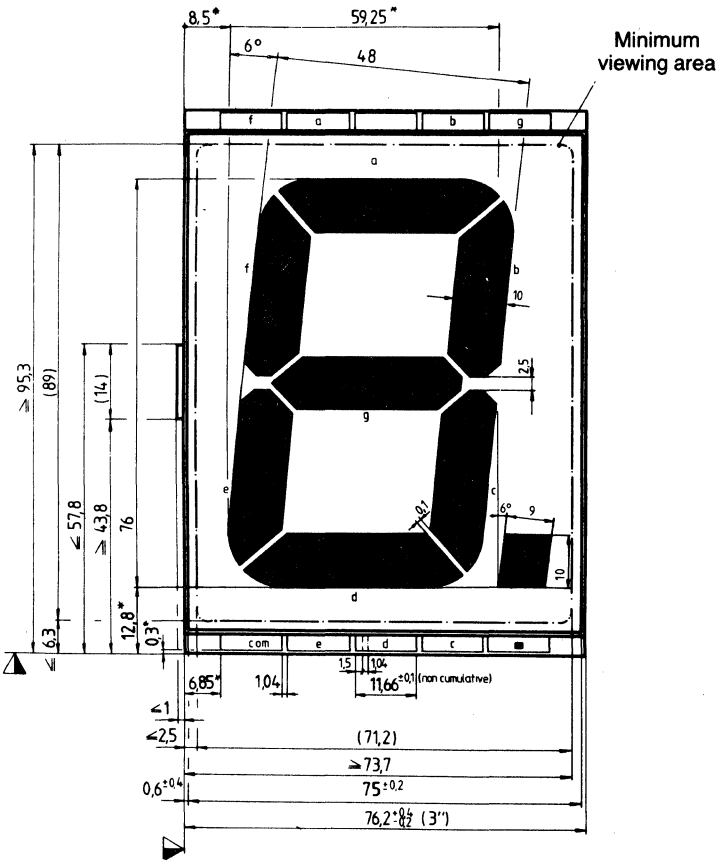

49. OUTLINE DRAWINGS

PY1067

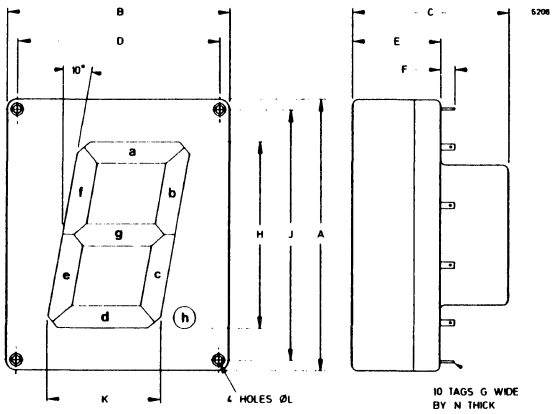

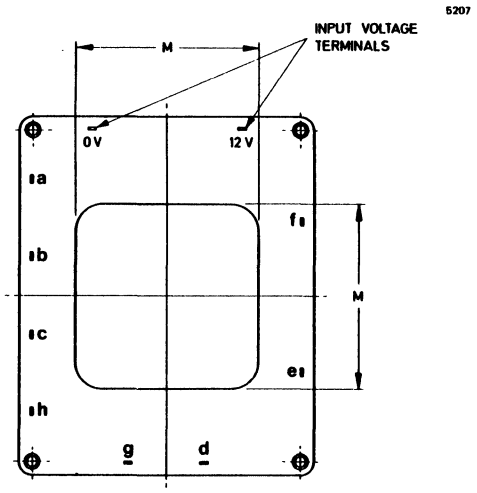

Ref	Millimetres	Inches	Ref	Millimetres	Inches
A	131.0	5.157	H	90.0	3.543
B	109.0	4.291	J	121.0	4.764
C	68.0	2.677	K	55.0	2.165
D	99.0	3.898	L	4.0	0.157
E	46.0	1.811	M	67.5	2.657
F	7.0	0.276	N	0.3	0.012
G	2.79	0.110			

Inch dimensions have been derived from millimetres.

Tube colour	Typical brightness ft. lamberts	Typical brightness cd/m²
Green	1000	3400
Red	300	1000
Blue	150	500
Yellow	750	2500
White	600	2000

PY1061

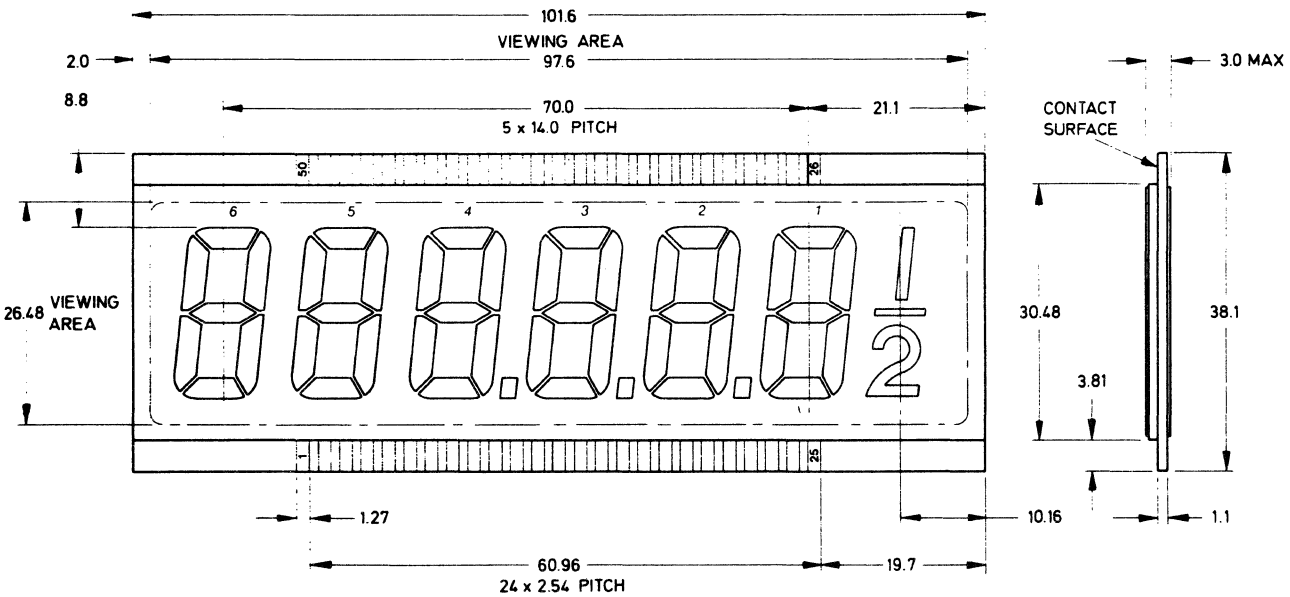

49. OUTLINE DRAWINGS

PY1069

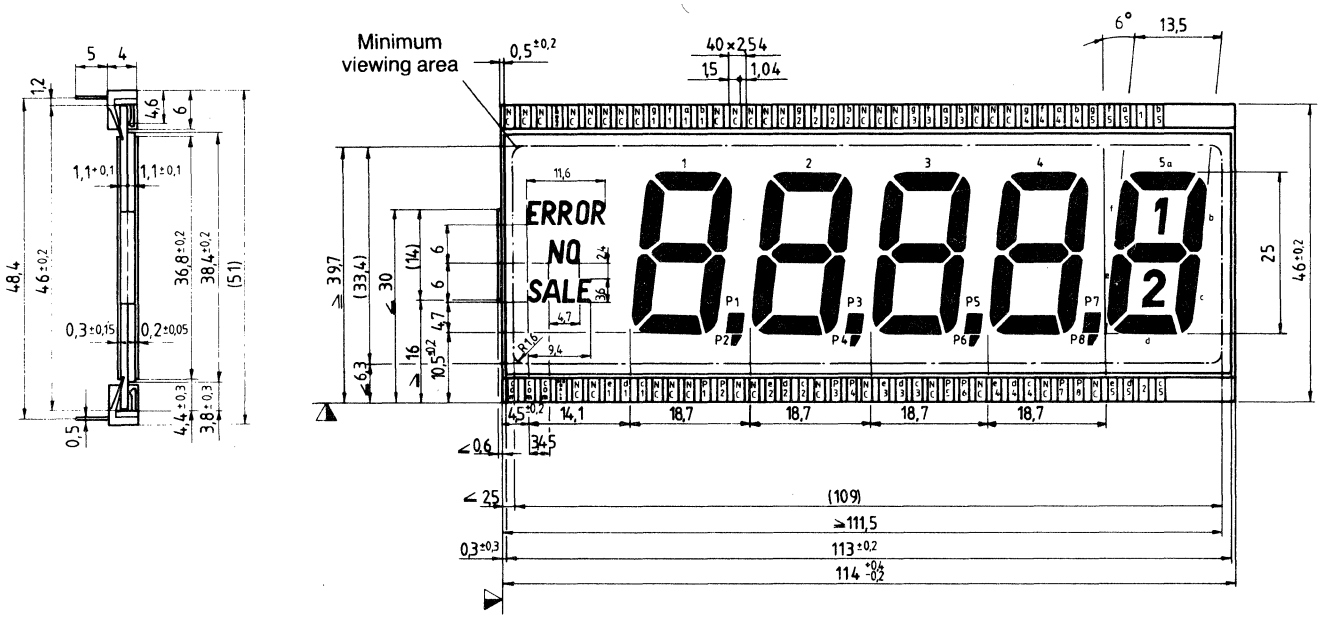

PY1070

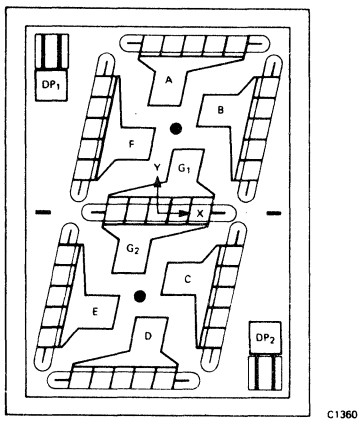

DIE SIZE	0.048" X 0.036"
CHARACTER SIZE	0.040", Seg. A-Seg. D, ℄-℄
	0.01956", Seg. B-Seg. F, ℄-℄
CHARACTER SLANT	12°
EMITTER WIDTH	0.002"
NOMINAL BONDING PAD SIZE	0.004" X 0.004"

BONDING PAD LOCATIONS

X_A	= 0.001"	Y_A	= 0.0145"
X_B	= 0.007"	Y_B	= 0.012"
X_C	= 0.0027"	Y_C	= -0.008"
X_D	= -0.001"	Y_D	= -0.0145"
X_E	= -0.007"	Y_E	= -0.012"
X_F	= -0.0027"	Y_F	= 0.008"
X_{G_1}	= 0.0032"	Y_{G_1}	= 0.0055"
X_{G_2}	= -0.0032"	Y_{G_2}	= -0.0055"
X_{DP_1}	= -0.0128"	Y_{DP_1}	= 0.015"
X_{DP_2}	= 0.0128"	Y_{DP_2}	= -0.015"

49. OUTLINE DRAWINGS

PY1071

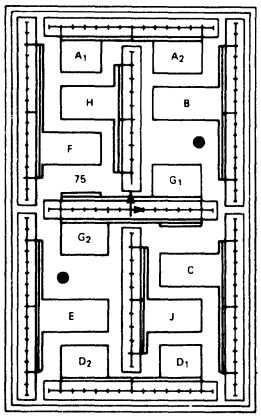

C1363

DIE SIZE	0.106" X 0.066"
CHARACTER SIZE	0.095", Seg. A-Seg. D, ℄-℄
	0.055", Seg. F-Seg. B, ℄-℄
CHARACTER SLANT	0°
EMITTER WIDTH	0.005"
EMITTER LENGTH	0.049", Seg. B, C, E, F
	0.046", Seg. A, D, G
	0.038", Seg. H, J
NOMINAL BONDING PAD SIZE	Universal Chip

BONDING PAD LOCATIONS

X_{A_1} = −0.0132" ± 0.003"	X_{G_1} = −0.0122" ± 0.004"	Y_{D_1} = −0.0392" ± 0.001"
X_{A_2} = 0.0122" ± 0.004"	X_{G_2} = 0.0122" ± 0.004"	Y_{D_2} = −0.0392" ± 0.001"
X_B = 0.0143" ± 0.006"	X_H = −0.0117" ± 0.005"	Y_E = −0.0278" ± 0.002"
X_C = 0.0153" ± 0.005"	X_J = 0.0117" ± 0.005"	Y_F = 0.0158" ± 0.002"
X_{D_1} = −0.0122" ± 0.003"	Y_{A_1} = 0.0392" ± 0.001"	Y_{G_1} = −0.0084" ± 0.001"
X_{D_2} = 0.0132" ± 0.003"	Y_{A_2} = 0.0392" ± 0.001"	Y_{G_2} = 0.0084" ± 0.001"
X_E = −0.0143" ± 0.006"	Y_B = 0.0278" ± 0.002"	Y_H = 0.0278" ± 0.002"
X_F = −0.0153" ± 0.005"	Y_C = −0.0158" ± 0.002"	Y_J = −0.0278" ± 0.002"

PY1072

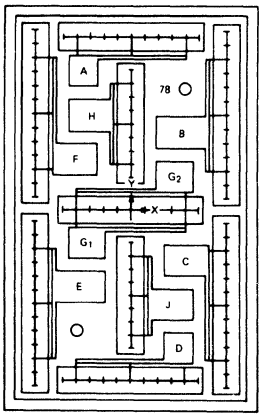

C1364

DIE SIZE	0.082" X 0.052"
CHARACTER SIZE	0.0695", Seg. A-Seg. D, ℄-℄
	0.0395", Seg. F-Seg. B, ℄-℄
CHARACTER SLANT	0°
EMITTER WIDTH	0.0055"
EMITTER LENGTH	0.0365", Seg. B, C, E, F
	0.030", Seg. A, D, G
	0.024", Seg. H, J
NOMINAL BONDING PAD SIZE	Universal Chip

BONDING PAD LOCATIONS

X_A = −0.0099" ± 0.001"	X_{G_2} = 0.009" ± 0.002"	Y_D = −0.0275" ± 0.001"
X_B = 0.0102" ± 0.003"	X_H = −0.0087" ± 0.002"	Y_E = −0.0157" ± 0.001"
X_C = 0.011" ± 0.002"	X_J = 0.0087" ± 0.002"	Y_F = 0.0101" ± 0.001"
X_D = 0.0099" ± 0.001"	Y_A = 0.0275" ± 0.001"	Y_{G_1} = −0.0725" ± 0.001"
X_E = −0.0102" ± 0.003"	Y_B = 0.0157" ± 0.001"	Y_{G_2} = 0.0725" ± 0.001"
X_F = −0.011" ± 0.002"	Y_C = −0.0101" ± 0.001"	Y_H = 0.019" ± 0.001"
X_{G_1} = −0.009" ± 0.002"		Y_J = −0.019" ± 0.001"

49. OUTLINE DRAWINGS

PY1073

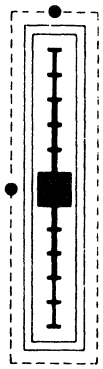

C1365

DIE SIZE	0.040" X 0.010"
CHARACTER SIZE	0.005" X 0.035"
CHARACTER SLANT	0°
EMITTER WIDTH	0.005"
EMITTER LENGTH	0.035"
BONDING PAD SIZE	0.004" X 0.004"
PAD LOCATION	0.000" X 0.000"

PY1074

DIE SIZE	0.014" X 0.014"
CHARACTER SIZE	0.010" X 0.010"
BONDING PAD SIZE	0.003" (DIA)

PY1075

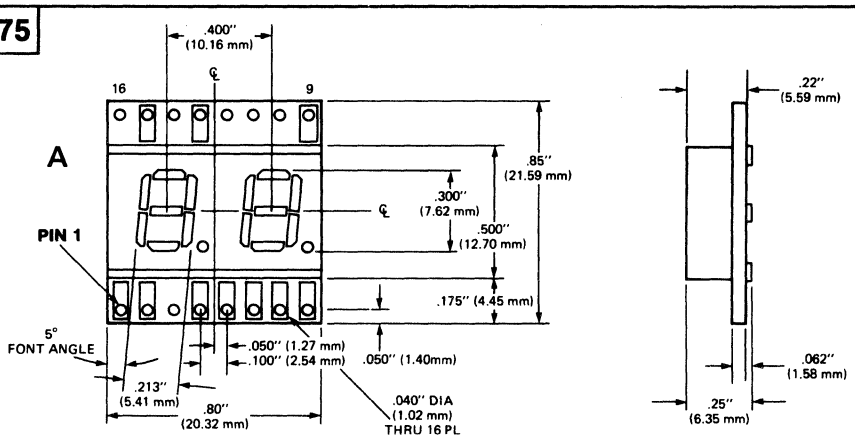

C1531

MULTIPLEXED TWO-DIGIT DISPLAYS

Orange	MMN36220	MMN36420
Yellow	MMN38220	MMN38420
Hi Eff. Red	MMN39220	MMN39420
PIN	**COMMON ANODE**	**COMMON CATHODE**
1	Cathode G	Anode G
2	Cathode E	Anode E
3	NC	NC
4	Dig. #1 Common Anodes	Dig. #1 Common Anodes
5	Cathode D	Anode D
6	Dig. #2 Common Anodes	Dig. #2 Common Anodes
7	Cathode DP	Anode DP
8	Cathode C	Anode C
9	Cathode B	Anode B
10	NC	NC
11	NC	NC
12	NC	NC
13	Cathode A	Anode A
14	NC	NC
15	Cathode F	Anode F
16	NC	NC

PY1076

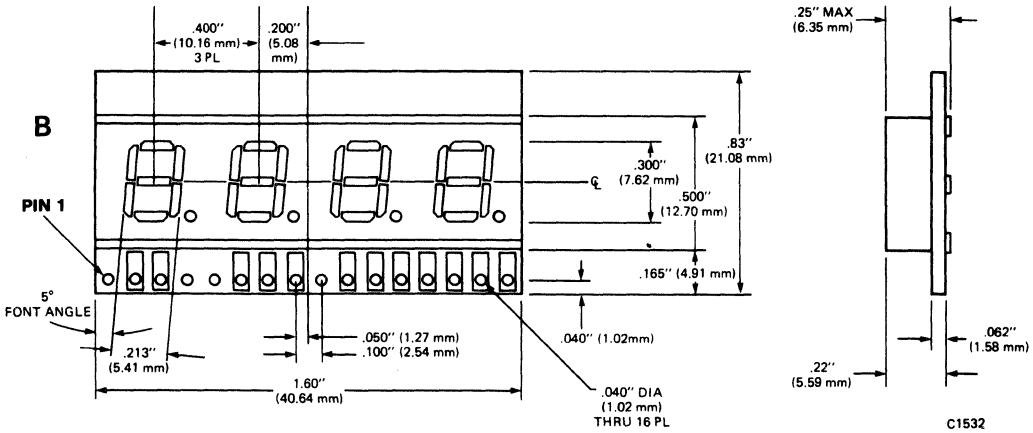

C1532

MULTIPLEXED FOUR-DIGIT DISPLAYS

Orange	MMN36240	MMN36440
Yellow	MMN38240	MMN38440
Hi Eff. Red	MMN39240	MMN39440
PIN	**COMMON ANODE**	**COMMON CATHODE**
1	NC	NC
2	Cathode E	Anode E
3	Dig. #1 Common Anodes	Dig #1 Common Cathodes
4	NC	NC
5	NC	NC
6	Dig. #2 Common Anodes	Dig #2 Common Cathodes
7	Cathode D	Anode D
8	Cathode G	Anode G
9	NC	NC
10	#3 Common Anodes	#3 Common Cathodes
11	Cathode B	Anode B
12	Cathode A	Anode A
13	Cathode F	Anode F
14	#4 Common Anodes	#4 Common Cathodes
15	Cathode D.P.	Anode D.P.
16	Cathode C	Anode C

49. OUTLINE DRAWINGS

PY1080

NOTE: SEE PY1102 FOR MODIFICATION SUFFIXES

DISPLAY TYPE	W WIDTH	H HEIGHT	EW EFFECTIVE WIDTH	EH EFFECTIVE HEIGHT	DH DIGIT HEIGHT	DW DIGIT WIDTH	DS DIGIT SPACING	SG SMALLER GLASS HEIGHT	℄ PIN-ROW LENGTH	PE END-PIN TO GLASS EDGE	SH SYMBOL HEIGHT	DES DESCRIPTOR (IF ANY)
PY1080	2.00 (50.8)	1.20 (30.5)	1.730 (43.9)	0.630 (16.0)	0.50 (12.7)	0.260 (6.6)	0.130 (3.3)	0.90 (22.8)	1.90 (48.2)	0.050 (1.3)	–	–
PY1080a	2.20 (55.8)	1.50 (38.1)	1.930 (50.0)	0.930 (23.6)	0.70 (17.8)	0.360 (9.1)	0.180 (4.6)	1.20 (30.5)	1.90 (48.2)	0.150 (3.8)	0.100 (2.5)	LOBAT

[NOMINAL DIMENSIONS IN INCHES (millimeters)]
NOTE: "EW" (Effective Width) and "EH" (Effective Height) are bezel opening dimensions

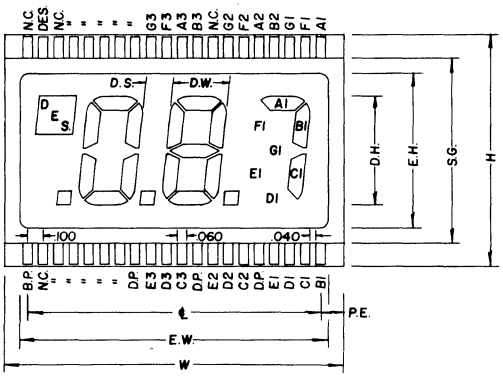

PY1081

NOTE: SEE PY1102 FOR MODIFICATION SUFFIXES

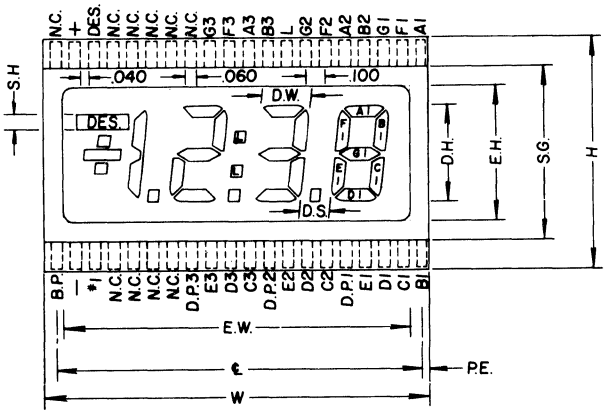

DISPLAY TYPE	W WIDTH	H HEIGHT	EW EFFECTIVE WIDTH	EH EFFECTIVE HEIGHT	DH DIGIT HEIGHT	DW DIGIT WIDTH	DS DIGIT SPACING	SG SMALLER GLASS HEIGHT	℄ PIN-ROW LENGTH	PE END-PIN TO GLASS EDGE	SH SYMBOL HEIGHT	DES DESCRIPTOR (IF ANY)
PY1081	2.00 (50.8)	0.90 (22.8)	1.730 (43.9)	0.430 (10.9)	0.35 (8.9)	0.220 (5.6)	0.20 (5.1)	0.70 (17.8)	1.90 (48.2)	0.035 (0.9)	–	–
PY1081a	2.00 (50.8)	1.20 (30.5)	1.730 (43.9)	0.630 (16.0)	0.50 (12.7)	0.260 (6.6)	0.150 (3.8)	0.90 (22.8)	1.90 (48.2)	0.035 (0.9)	0.080 (2.0)	LOBAT
PY1081b	2.00 (50.8)	1.20 (30.5)	1.730 (43.9)	0.630 (16.0)	0.50 (12.7)	0.260 (6.6)	0.150 (3.8)	0.90 (22.8)	1.90 (48.2)	0.035 (0.9)	0.100 (2.5)	–
PY1081c	2.75 (69.8)	1.50 (38.1)	2.380 (60.4)	0.830 (21.1)	0.70 (17.8)	0.360 (9.1)	0.180 (4.6)	1.20 (30.5)	1.90 (48.2)	0.425 (10.8)	0.100 (2.5)	LOBAT
PY1081d	2.75 (69.8)	1.50 (38.1)	2.380 (60.4)	0.830 (21.1)	0.70 (17.8)	0.360 (9.1)	0.220 (5.6)	1.20 (30.5)	1.90 (48.2)	0.430 (10.9)	0.100 (2.5)	–
PY1081e	3.70 (93.9)	1.80 (45.7)	3.330 (84.5)	1.130 (28.7)	1.00 (25.4)	0.520 (13.2)	0.320 (8.1)	1.50 (38.1)	1.90 (48.2)	0.900 (22.8)	0.120 (3.0)	–

[NOMINAL DIMENSIONS IN INCHES (millimeters)]
NOTE: "EW" (Effective Width) and "EH" (Effective Height) are bezel opening dimensions

PY1082

NOTE: SEE PY1102 FOR MODIFICATION SUFFIXES

DISPLAY TYPE	W WIDTH	H HEIGHT	EW EFFECTIVE WIDTH	EH EFFECTIVE HEIGHT	DH DIGIT HEIGHT	DW DIGIT WIDTH	DS DIGIT SPACING	SG SMALLER GLASS HEIGHT	℄ PIN-ROW LENGTH	PE END-PIN TO GLASS EDGE	SH SYMBOL HEIGHT	DES DESCRIPTOR (IF ANY)
PY1082	2.00 (50.8)	0.90 (22.8)	1.730 (43.9)	0.430 (10.9)	0.350 (8.9)	0.220 (5.6)	0.200 (5.1)	0.70 (17.8)	1.90 (48.2)	0.035 (0.9)	–	–
PY1082a	2.00 (50.8)	1.20 (30.5)	1.730 (43.9)	0.630 (16.0)	0.50 (12.7)	0.260 (6.6)	0.180 (4.6)	0.90 (22.8)	1.90 (48.2)	0.035 (0.9)	–	–
PY1082b	2.75 (69.8)	1.50 (38.1)	2.380 (60.4)	0.830 (21.1)	0.70 (17.8)	0.360 (9.1)	0.230 (5.8)	1.20 (30.5)	1.90 (48.2)	0.430 (10.9)	–	–
PY1082c	3.70 (93.9)	1.80 (45.7)	3.32 (84.3)	1.130 (28.7)	1.00 (25.4)	0.520 (13.2)	0.360 (9.1)	1.50 (38.1)	1.90 (48.2)	0.900 (22.8)	–	–

[NOMINAL DIMENSIONS IN INCHES (millimeters)]
NOTE: "EW" (Effective Width) and "EH" (Effective Height) are bezel opening dimensions

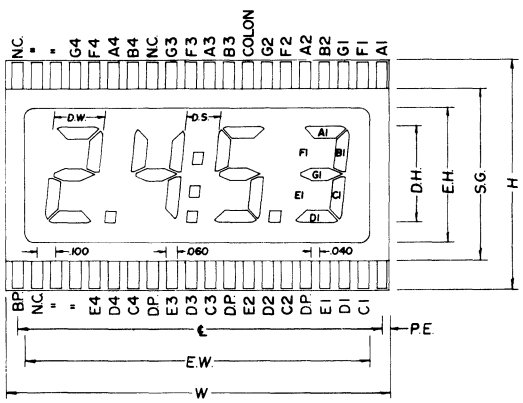

49. OUTLINE DRAWINGS

PY1083

NOTE: SEE PY1102 FOR MODIFICATION SUFFIXES

DISPLAY TYPE	W WIDTH	H HEIGHT	EW EFFECTIVE WIDTH	EH EFFECTIVE HEIGHT	DH DIGIT HEIGHT	DW DIGIT WIDTH	DS DIGIT SPACING	SG SMALLER GLASS HEIGHT	℄ PIN-ROW LENGTH	PE END-PIN TO GLASS EDGE	SH SYMBOL HEIGHT	DES DESCRIPTOR (IF ANY)
PY1083	2.00 (50.8)	0.90 (22.8)	1.730 (43.9)	0.430 (10.9)	0.30 (7.6)	0.200 (5.1)	0.160 (4.1)	0.70 (17.8)	1.90 (48.2)	0.035 (0.9)	0.100 (2.5)	–
PY1083a	2.00 (50.8)	1.20 (30.5)	1.730 (43.9)	0.630 (16.0)	0.40 (10.2)	0.200 (5.1)	0.160 (4.1)	0.90 (22.8)	1.90 (48.2)	0.035 (0.9)	0.100 (2.5)	–
PY1083b	2.00 (50.8)	1.20 (30.5)	1.730 (43.9)	0.630 (16.0)	0.40 (10.2)	0.20 (5.1)	0.13 (3.3)	0.90 (22.8)	1.90 (48.2)	0.050 (1.27)	0.090 (2.3)	LOBAT
PY1083c	2.75 (69.8)	1.50 (38.1)	2.380 (60.4)	0.830 (21.1)	0.60 (15.2)	0.30 (7.6)	0.17 (4.3)	1.20 (30.5)	1.90 (48.2)	0.425 (10.8)	0.100 (2.5)	–
PY1083d	3.70 (94.0)	1.80 (45.7)	3.330 (84.5)	1.130 (28.7)	0.80 (20.3)	0.400 (10.2)	0.220 (5.6)	1.50 (38.1)	1.90 (48.2)	0.90 (22.8)	0.100 (2.5)	–

(NOMINAL DIMENSIONS IN INCHES (millimeters))
NOTE: "EW" (Effective Width) and "EH" (Effective Height) are bezel opening dimensions

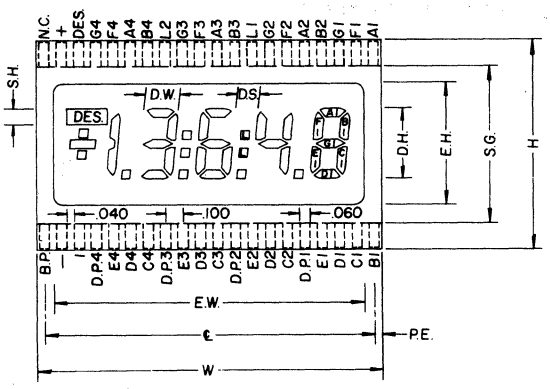

PY1084

NOTE: SEE PY1102 FOR MODIFICATION SUFFIXES

DISPLAY TYPE	W WIDTH	H HEIGHT	EW EFFECTIVE WIDTH	EH EFFECTIVE HEIGHT	DH DIGIT HEIGHT	DW DIGIT WIDTH	DS DIGIT SPACING	SG SMALLER GLASS HEIGHT	℄ PIN-ROW LENGTH	PE END-PIN TO GLASS EDGE	SH SYMBOL HEIGHT	DES DESCRIPTOR (IF ANY)
PY1084	2.00 (50.8)	1.20 (30.5)	1.730 (43.9)	0.630 (16.0)	0.40 (10.2)	0.186 (4.7)	0.15 (3.8)	0.90 (22.8)	1.90 (48.3)	0.035 (0.9)	–	–

(NOMINAL DIMENSIONS IN INCHES (millimeters))
NOTE: "EW" (Effective Width) and "EH" (Effective Height) are bezel opening dimensions

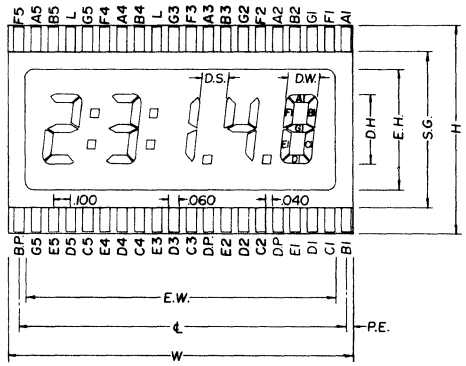

PY1085

NOTE: SEE PY1102 FOR MODIFICATION SUFFIXES

DISPLAY TYPE	W WIDTH	H HEIGHT	EW EFFECTIVE WIDTH	EH EFFECTIVE HEIGHT	DH DIGIT HEIGHT	DW DIGIT WIDTH	DS DIGIT SPACING	SG SMALLER GLASS HEIGHT	℄ PIN-ROW LENGTH	PE END-PIN TO GLASS EDGE	SH SYMBOL HEIGHT	DES DESCRIPTOR (IF ANY)
PY1085	3.20 (81.2)	1.50 (38.1)	2.830 (71.9)	0.830 (21.1)	0.70 (17.8)	0.36 (9.1)	0.18 (4.6)	1.20 (30.5)	2.40 (61.0)	0.400 (10.2)	–	–

(NOMINAL DIMENSIONS IN INCHES (millimeters))
NOTE: "EW" (Effective Width) and "EH" (Effective Height) are bezel opening dimensions

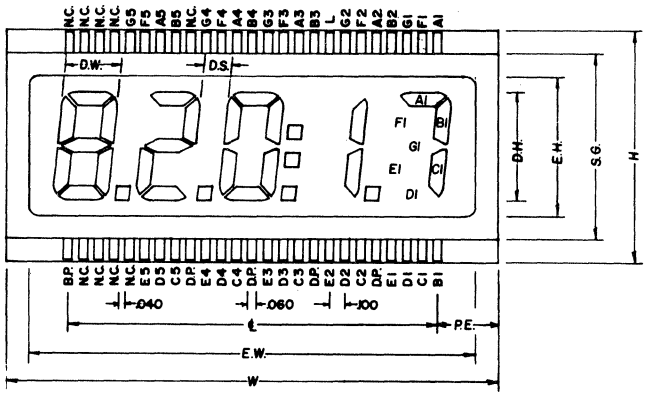

PY1086

NOTE: SEE PY1102 FOR MODIFICATION SUFFIXES

DISPLAY TYPE	W WIDTH	H HEIGHT	EW EFFECTIVE WIDTH	EH EFFECTIVE HEIGHT	DH DIGIT HEIGHT	DW DIGIT WIDTH	DS DIGIT SPACING	SG SMALLER GLASS HEIGHT	℄ PIN-ROW LENGTH	PE END-PIN TO GLASS EDGE	SH SYMBOL HEIGHT	DES DESCRIPTOR (IF ANY)
PY1086	4.50 (114.2)	1.80 (45.7)	4.13 (104.9)	1.13 (28.7)	1.0 (25.4)	.520 (13.2)	.325 (8.3)	1.50 (38.1)	3.100 (78.7)	.700 (17.8)	–	–

(NOMINAL DIMENSIONS IN INCHES (millimeters))
NOTE: "EW" (Effective Width) and "EH" (Effective Height) are bezel opening dimensions

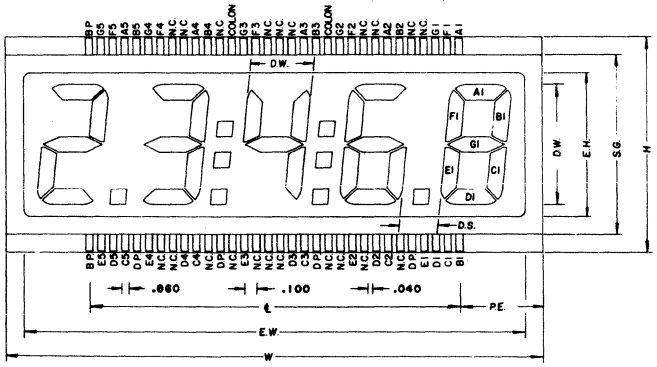

49. OUTLINE DRAWINGS

PY1096

NOTE: SEE PY1102 FOR MODIFICATION SUFFIXES

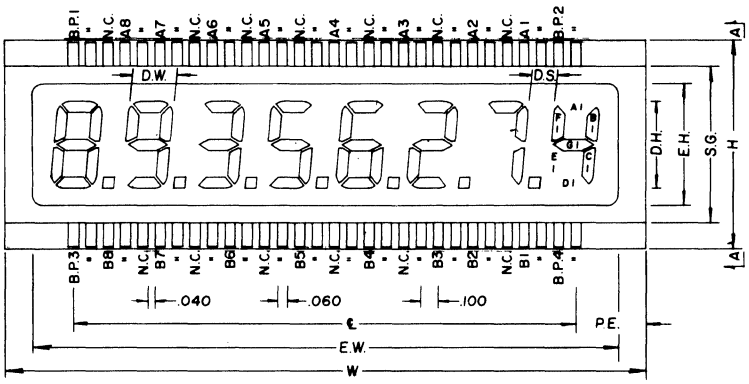

NOTE:
A = A, B, C, D.P.
B = D, E, F, G
N.C. = No Connection
B.P. 1 = A, F
B.P. 2 = B, G
B.P. 3 = C, E
B.P. 4 = D, D.P.

DISPLAY TYPE	W WIDTH	H HEIGHT	EW EFFECTIVE WIDTH	EH EFFECTIVE HEIGHT	DH DIGIT HEIGHT	DW DIGIT WIDTH	DS DIGIT SPACING	SG SMALLER GLASS HEIGHT	℄ PIN-ROW LENGTH	PE END-PIN TO GLASS EDGE	SH SYMBOL HEIGHT	DES DESCRIPTOR (IF ANY)
PY1096	3.70 (93.9)	1.20 (30.5)	3.320 (84.3)	0.630 (16.0)	0.500 (12.7)	0.260 (6.6)	0.150 (3.8)	0.90 (22.8)	2.90 (73.6)	0.398 (10.1)	–	–

[NOMINAL DIMENSIONS IN INCHES (millimeters)]
NOTE: "EW" (Effective Width) and "EH" (Effective Height) are bezel opening dimensions

PY1097

NOTE: SEE PY1102 FOR MODIFICATION SUFFIXES

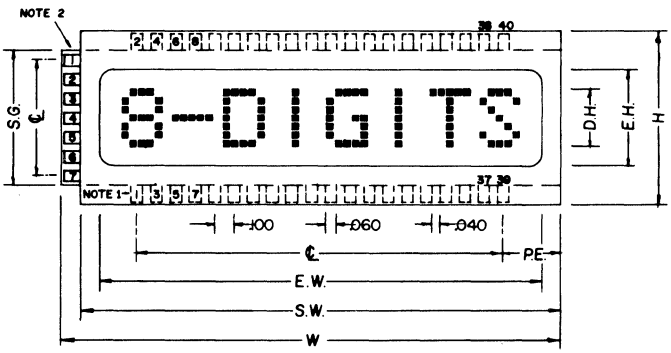

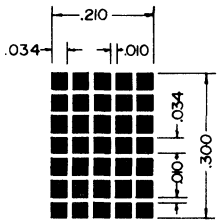

TYPICAL DIGIT

NOTE 1: Refers to column number
NOTE 2: Refers to row (common plane) number

DISPLAY TYPE	W WIDTH	H HEIGHT	EW EFFECTIVE WIDTH	EH EFFECTIVE HEIGHT	DH DIGIT HEIGHT	DW DIGIT WIDTH	DS DIGIT SPACING	SG SMALLER GLASS HEIGHT	℄ PIN-ROW LENGTH	PE END-PIN TO GLASS EDGE	SW SMALLER GLASS WIDTH
PY1097	2.60 (66.0)	0.90 (22.8)	2.230 (56.6)	.430 (10.9)	0.300 (7.6)	0.210 (5.3)	0.054 (1.4)	0.70 (17.8)	1.90 (48.2)	0.300 (7.6)	2.50 (63.5)

[NOMINAL DIMENSIONS IN INCHES (millimeters)]
NOTE: "EW" (Effective Width) and "EH" (Effective Height) are bezel opening dimensions

49. OUTLINE DRAWINGS

PY1098

NOTE: SEE PY1102 FOR MODIFICATION SUFFIXES

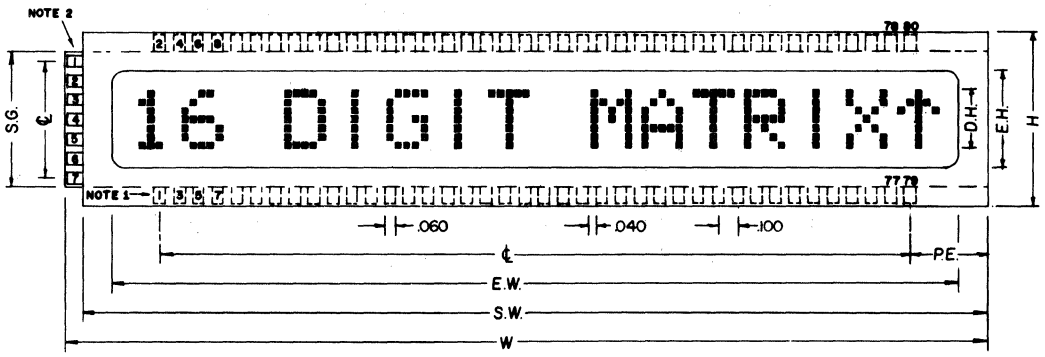

NOTE: 1. Refers to column number
NOTE: 2. Refers to row (common plane) number

DISPLAY TYPE	W WIDTH	H HEIGHT	EW EFFECTIVE WIDTH	EH EFFECTIVE HEIGHT	DH DIGIT HEIGHT	DW DIGIT WIDTH	DS DIGIT SPACING	SG SMALLER GLASS HEIGHT	℄ PIN-ROW LENGTH	PE END-PIN TO GLASS EDGE	SW SMALLER GLASS WIDTH
PY1098	4.80 (121.8)	0.90 (22.8)	4.330 (109.9)	.440 (11.2)	0.300 (7.6)	0.210 (5.3)	0.054 (1.4)	0.70 (17.8)	3.90 (99.0)	0.400 (10.2)	4.70 (119.4)

[NOMINAL DIMENSIONS IN INCHES (millimeters)]
NOTE: "EW" (Effective Width) and "EH" (Effective Height) are bezel opening dimensions

PY1099

NOTE: SEE PY1102 FOR MODIFICATION SUFFIXES

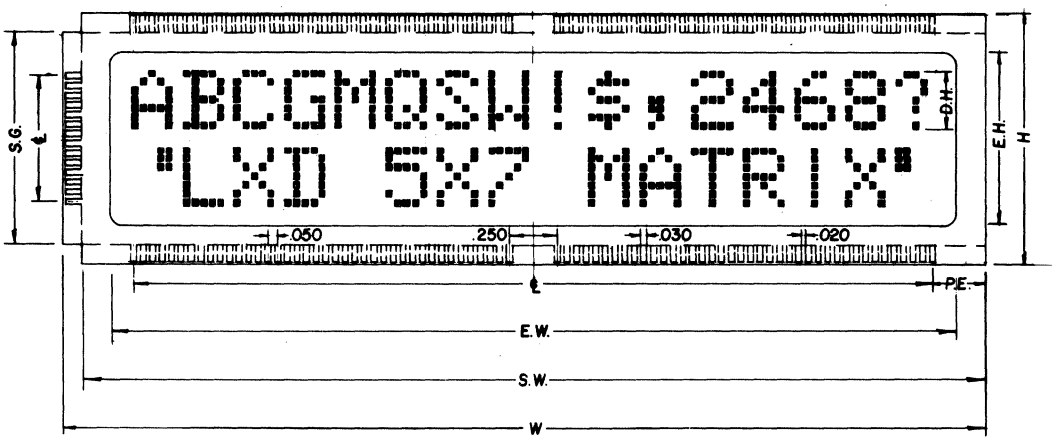

DISPLAY TYPE	W WIDTH	H HEIGHT	EW EFFECTIVE WIDTH	EH EFFECTIVE HEIGHT	DH DIGIT HEIGHT	DW DIGIT WIDTH	DS DIGIT SPACING	SG SMALLER GLASS HEIGHT	℄ PIN-ROW LENGTH	PE END-PIN TO GLASS EDGE	SW SMALLER GLASS WIDTH
PY1099	4.80 (121.8)	1.30 (33.0)	4.330 (109.9)	0.830 (21.1)	0.300 (7.6)	0.210 (5.3)	0.054 (1.4)	1.10 (17.8)	4.18 (106.1)	0.260 (6.6)	4.70 (119.4)

[NOMINAL DIMENSIONS IN INCHES (millimeters)]
NOTE: "EW" (Effective Width) and "EH" (Effective Height) are bezel opening dimensions

49. OUTLINE DRAWINGS

PY1100

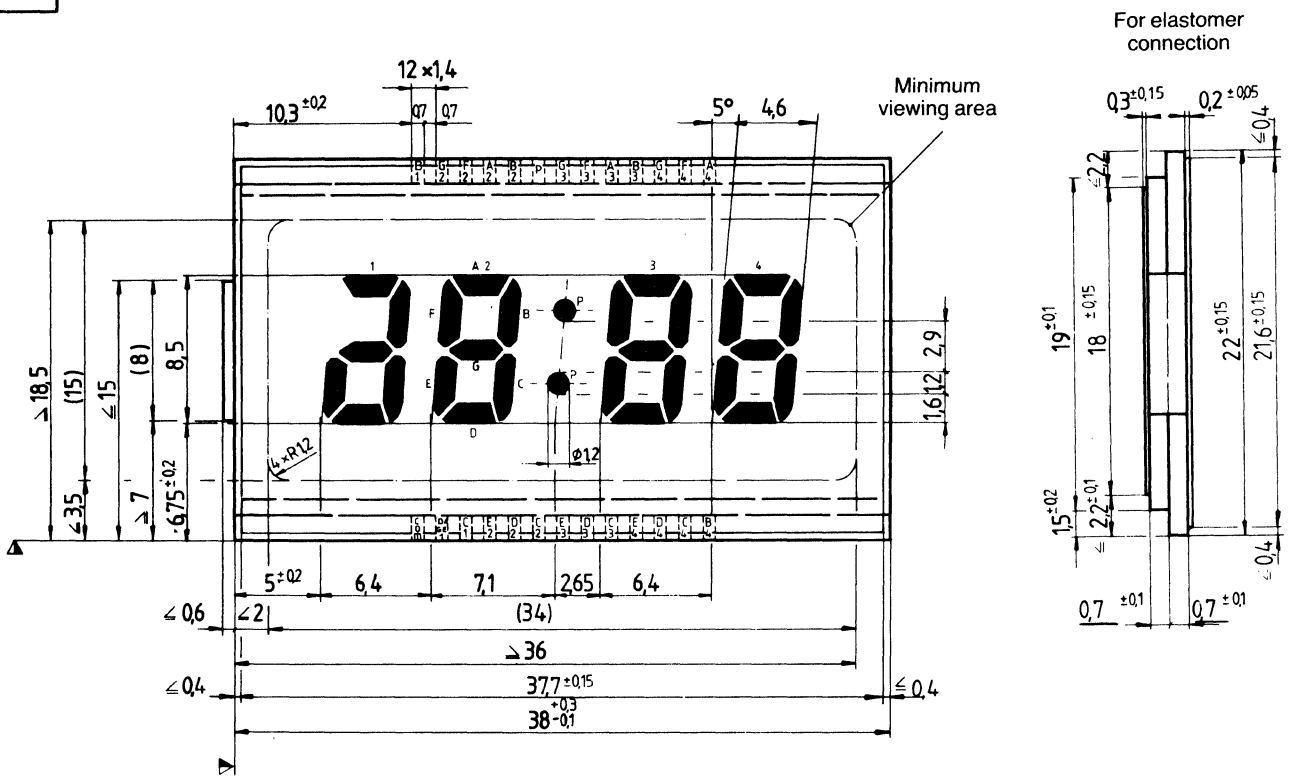

Energizable area: 109.7 mm²

PY1101

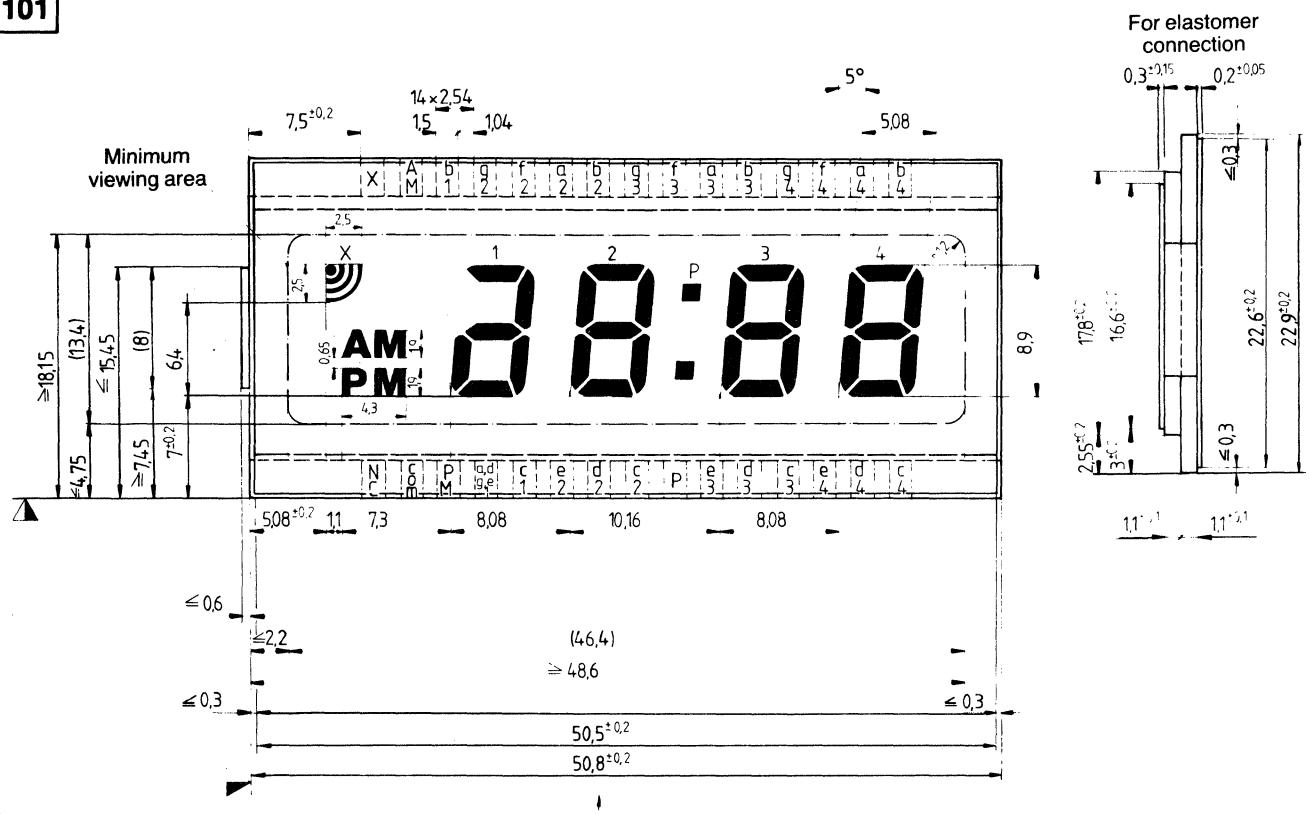

Energizable area: 101.3 mm²

Please connect all unused segments to common.

Preferred viewing direction

49. OUTLINE DRAWINGS

PY1103

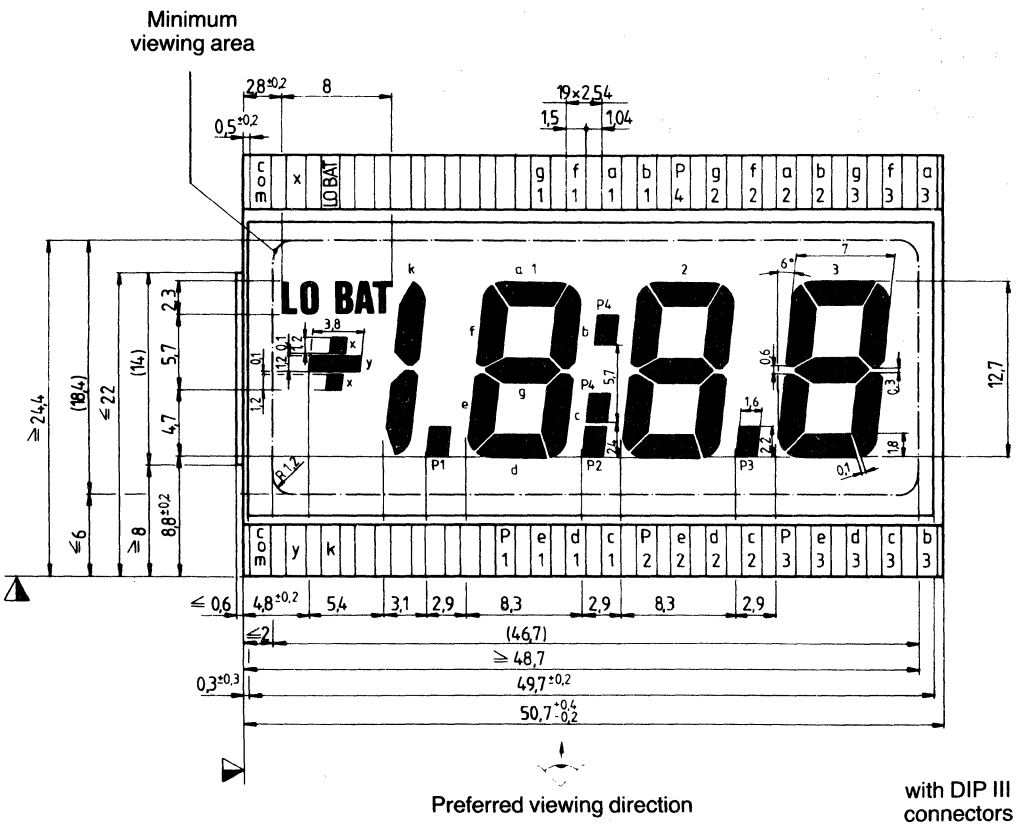

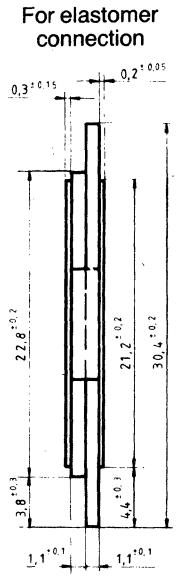

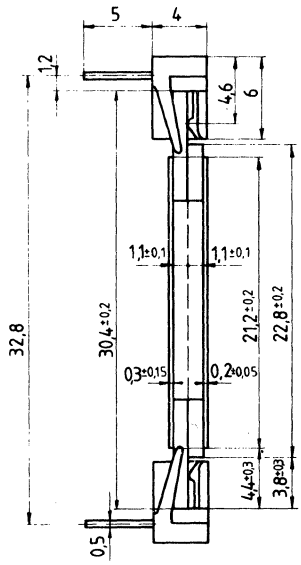

Energizable area: 185.7 mm²

MODIFICATION SUFFIXES

B = 0.185″ PIN LENGTH
C = 0.160″ PIN LENGTH
E = ILLUMINATION PANEL
G = HIGH HUMIDITY POLARIZER
H = ALUMINUM REFLECTOR
K = TRANSFLECTIVE REFLECTOR

49. OUTLINE DRAWINGS

PY1104

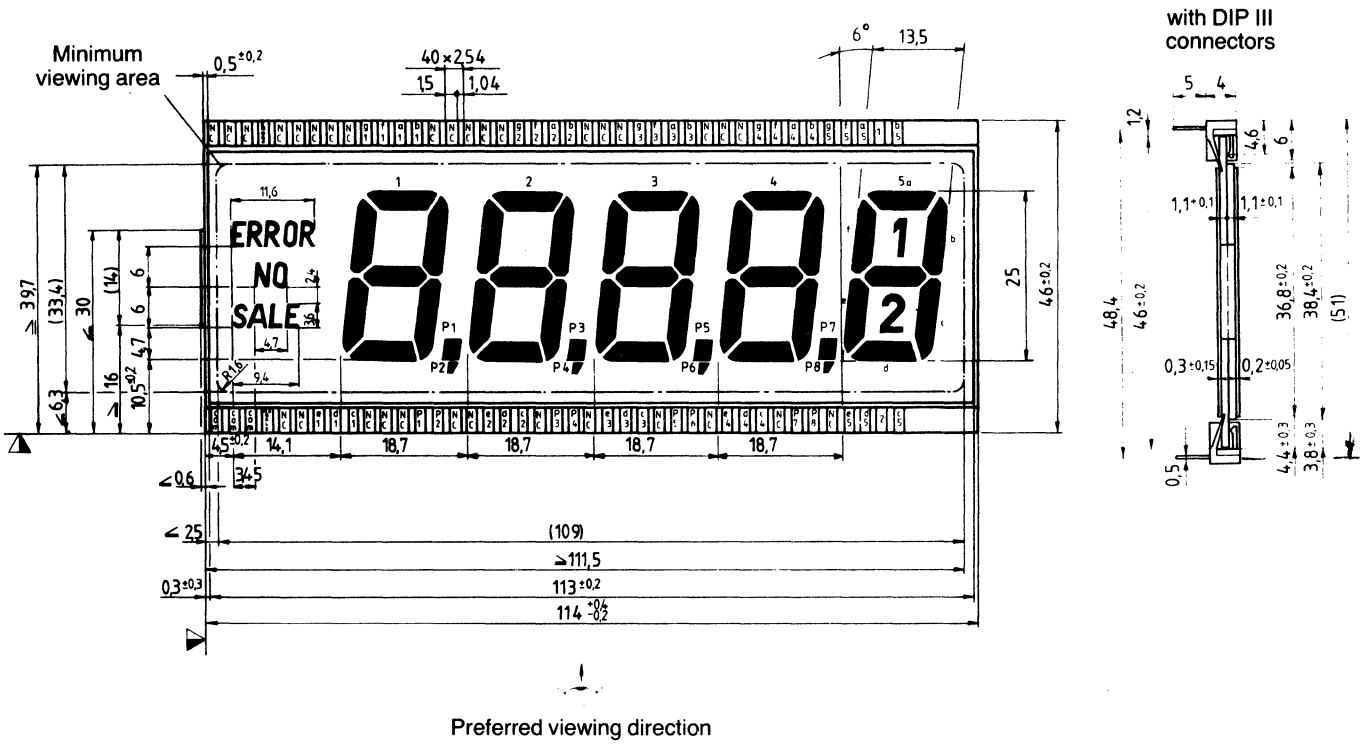

PY1105

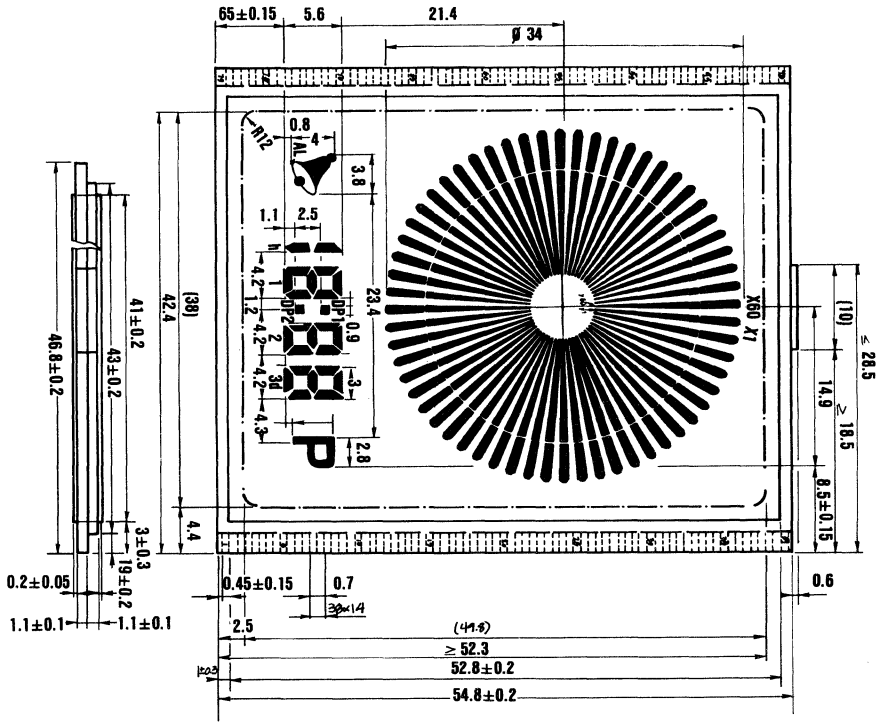

49. OUTLINE DRAWINGS

PY1106

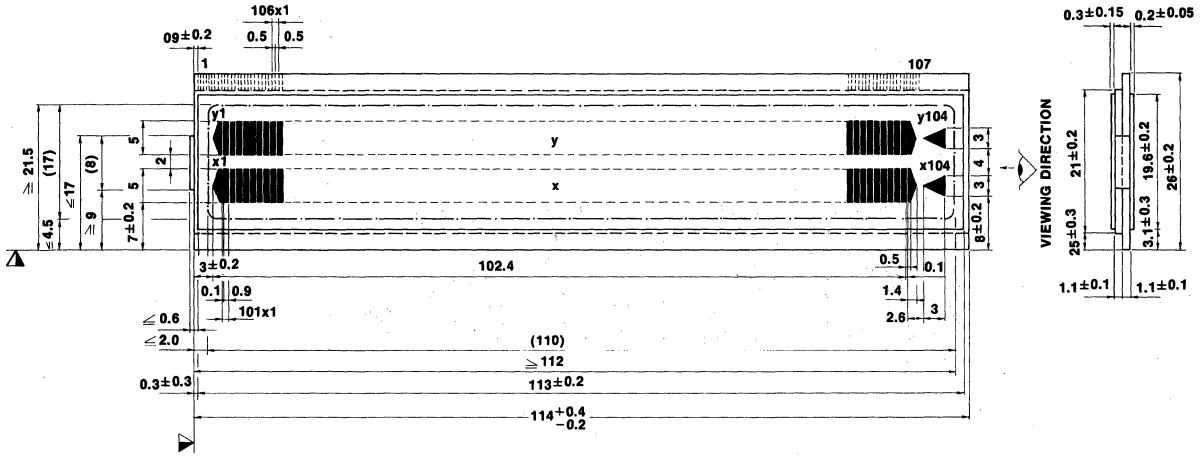

	1	2	3	4	bis	107
COM 1	COM 1	–	–	x1		x104
COM 2	–	COM2	COM2	y1		y104

TOLERANCE OF ALL DIMENSIONS ±0.1 MM
NON CUMULATIVE, UNLESS OTHERWISE SPECIFIED.

PY1107

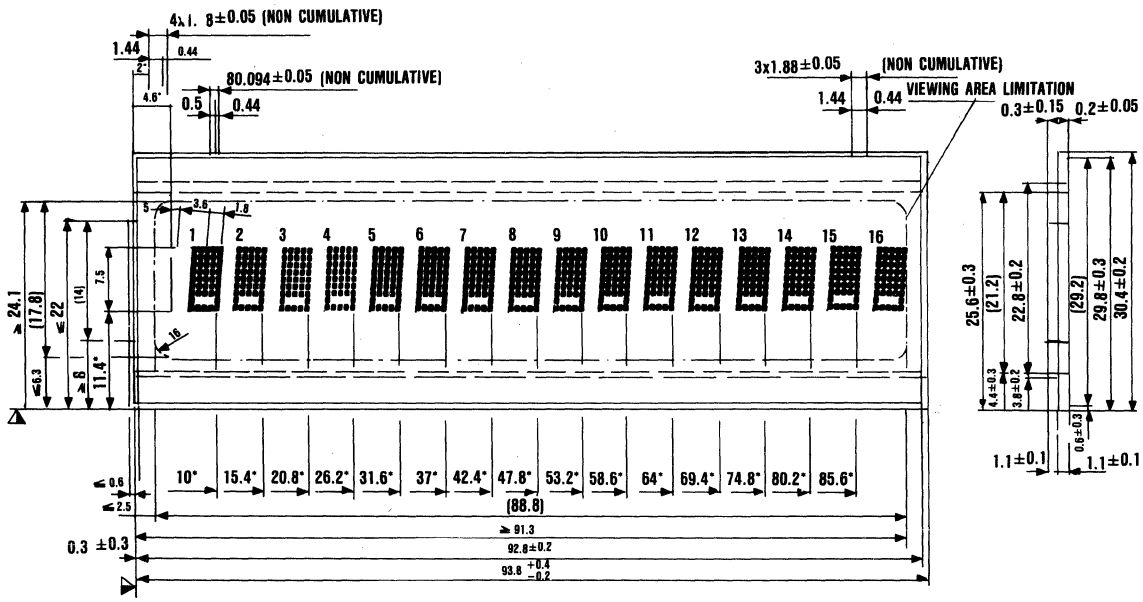

*TOLERANCE ±0.2

49. OUTLINE DRAWINGS

PY1108

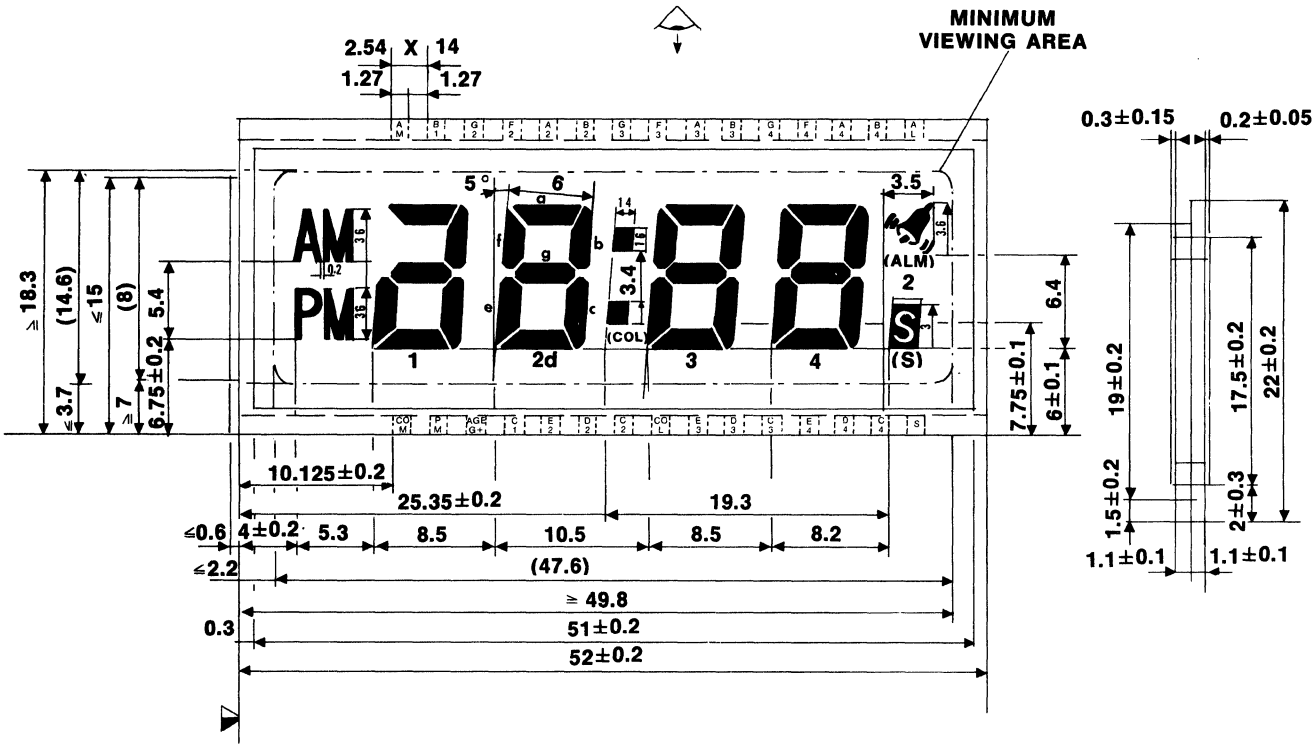

PY1111

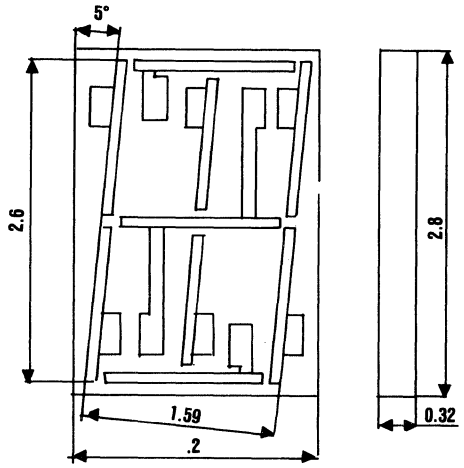

PY1111a

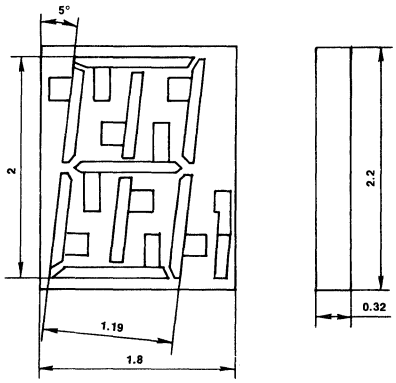

49. OUTLINE DRAWINGS

PY1112

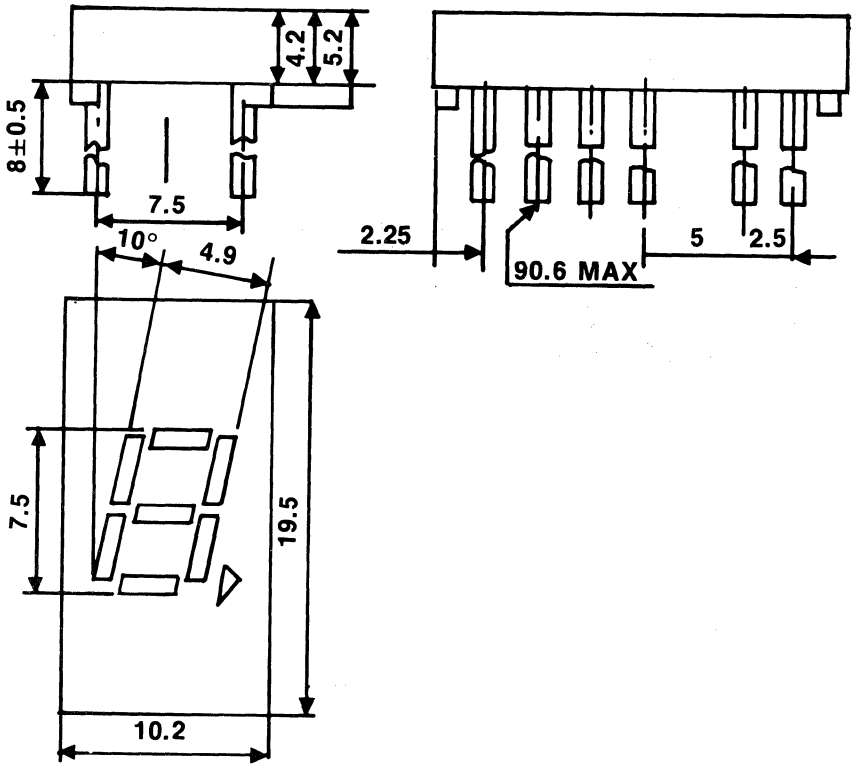

PY1114

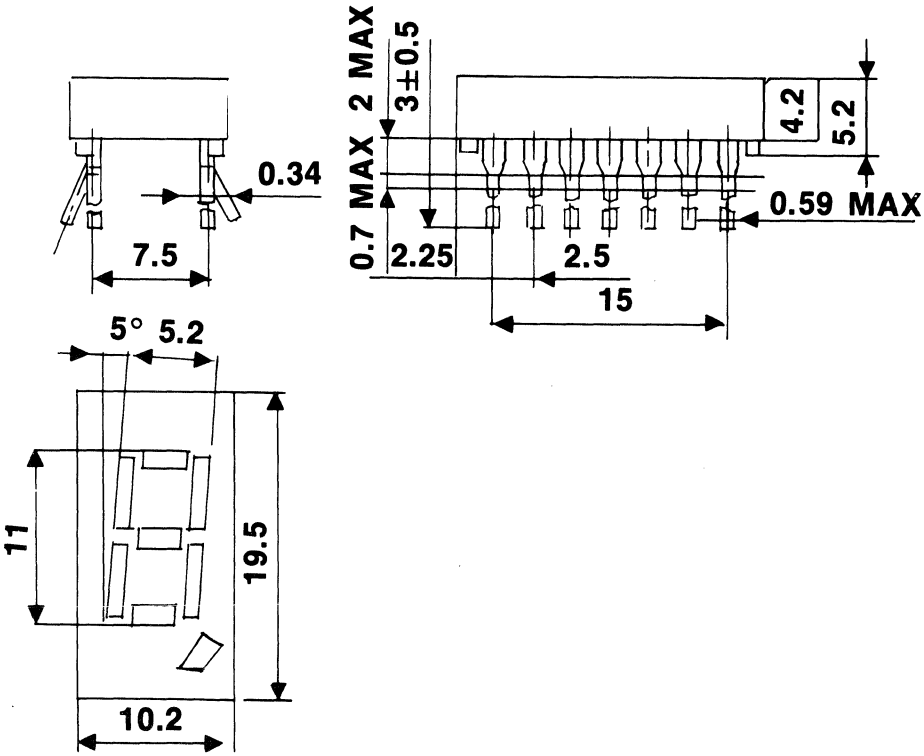

49. OUTLINE DRAWINGS

PY1115

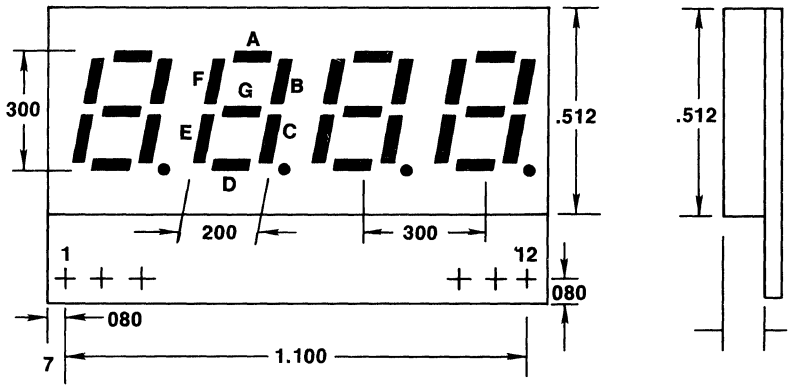

PY1116

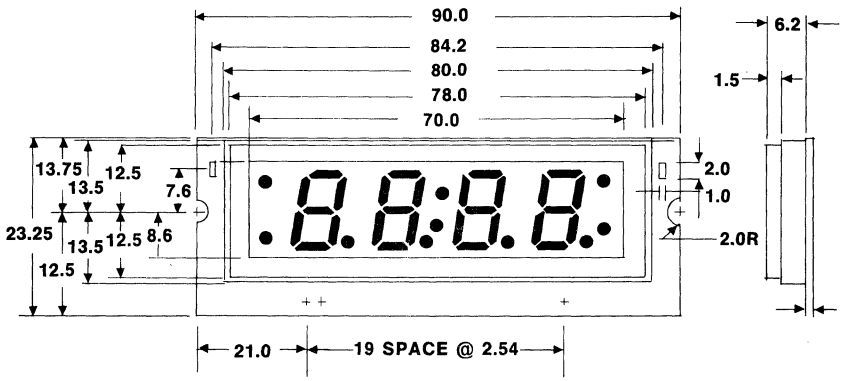

PY1117

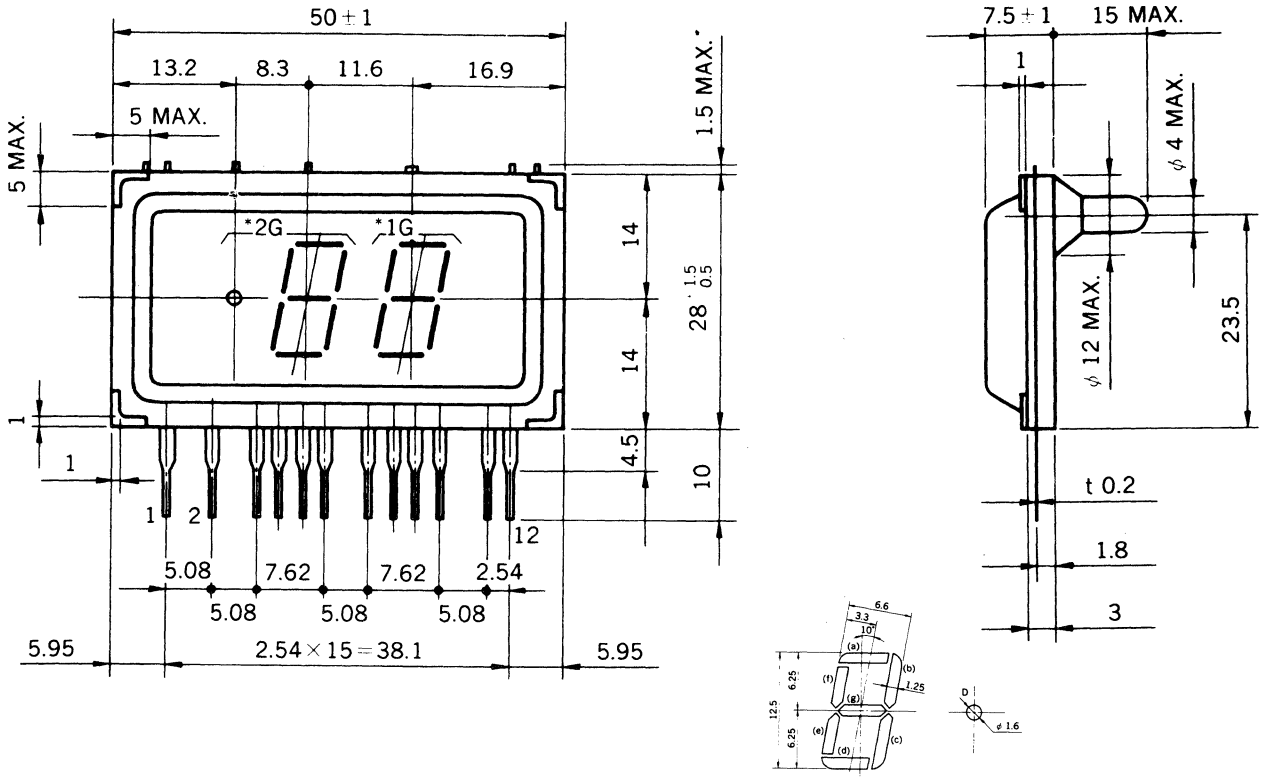

49. OUTLINE DRAWINGS

PY1118

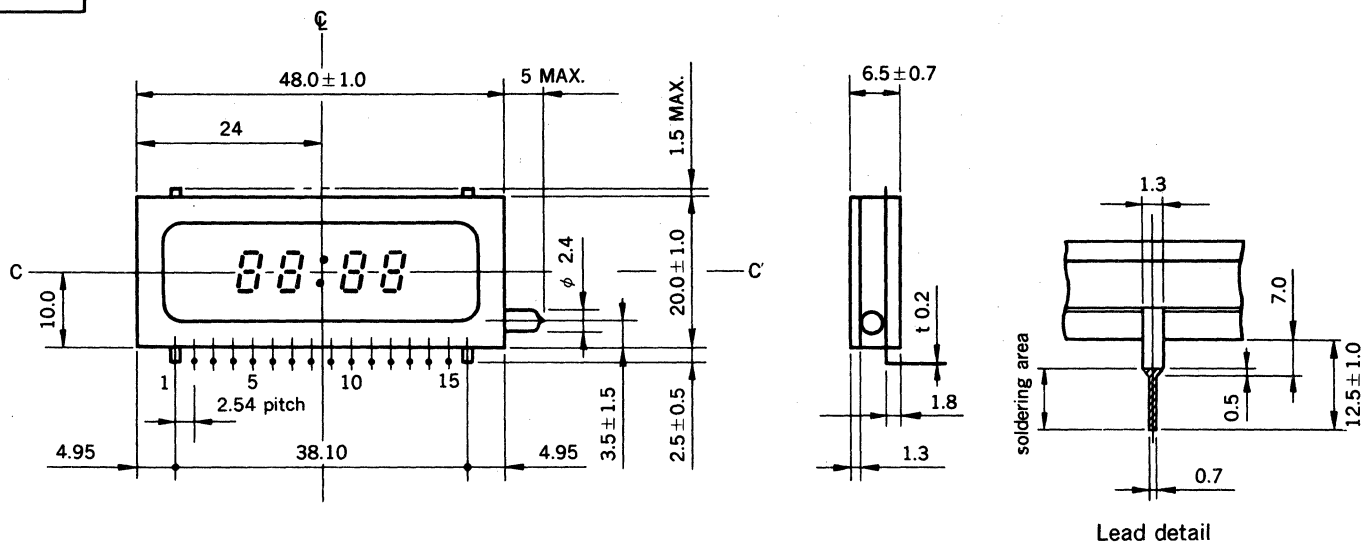

PY1119

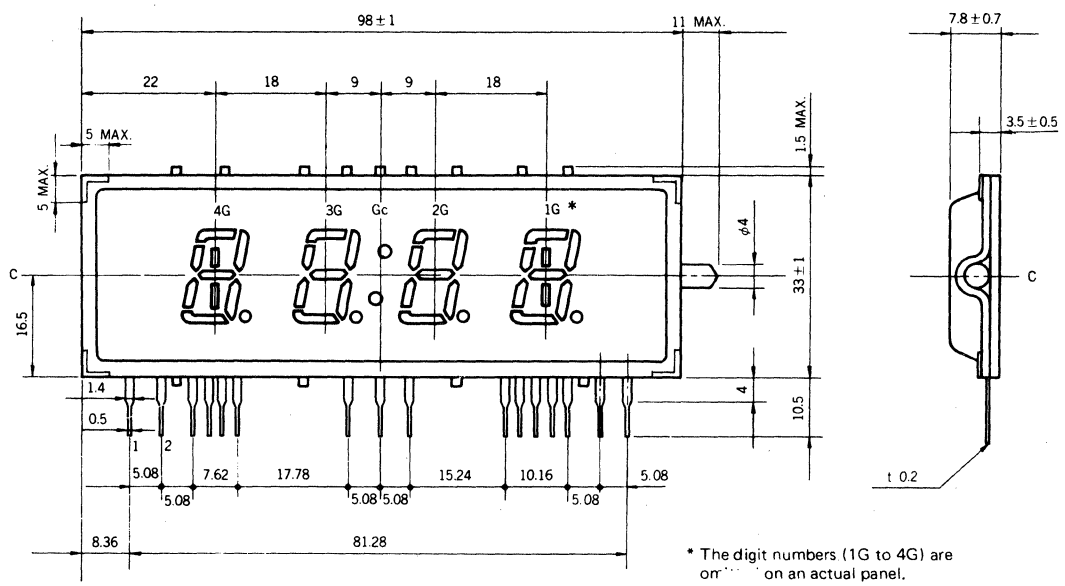

* The digit numbers (1G to 4G) are omitted on an actual panel.

PY1120

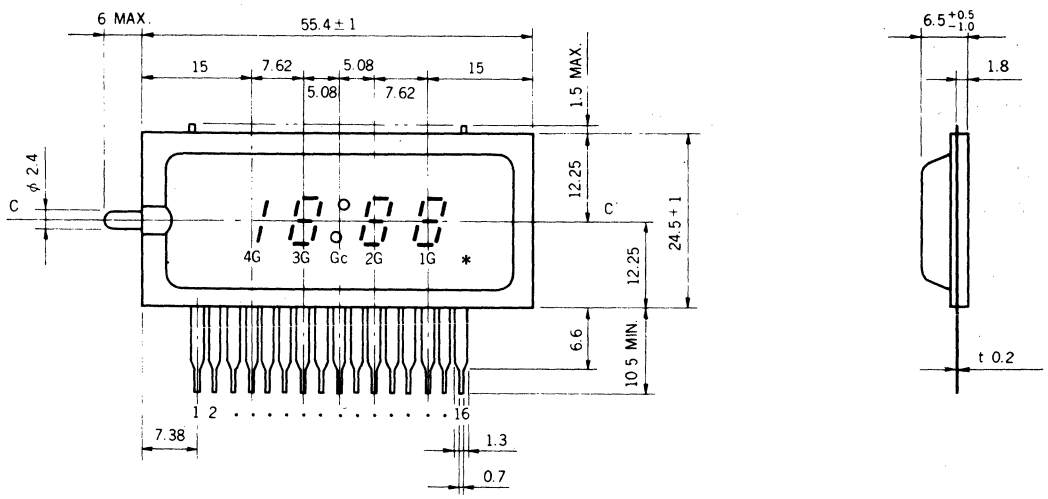

49. OUTLINE DRAWINGS

PY1122

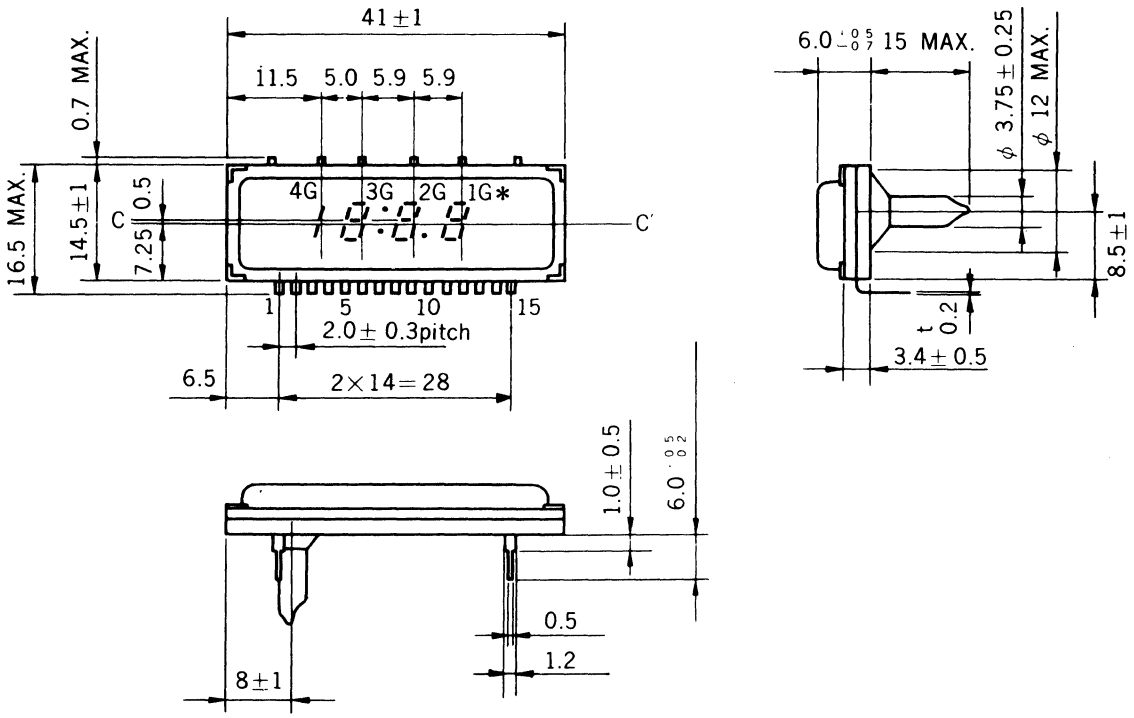

PY1123

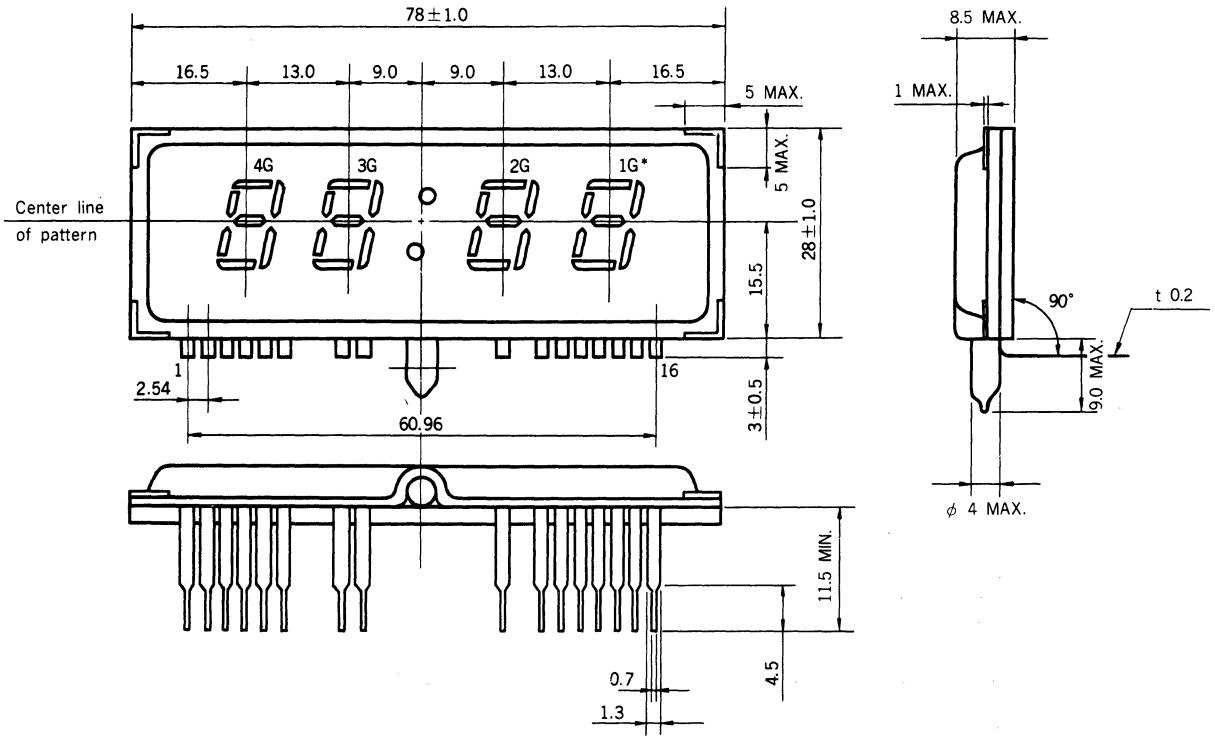

49. OUTLINE DRAWINGS

PY1124

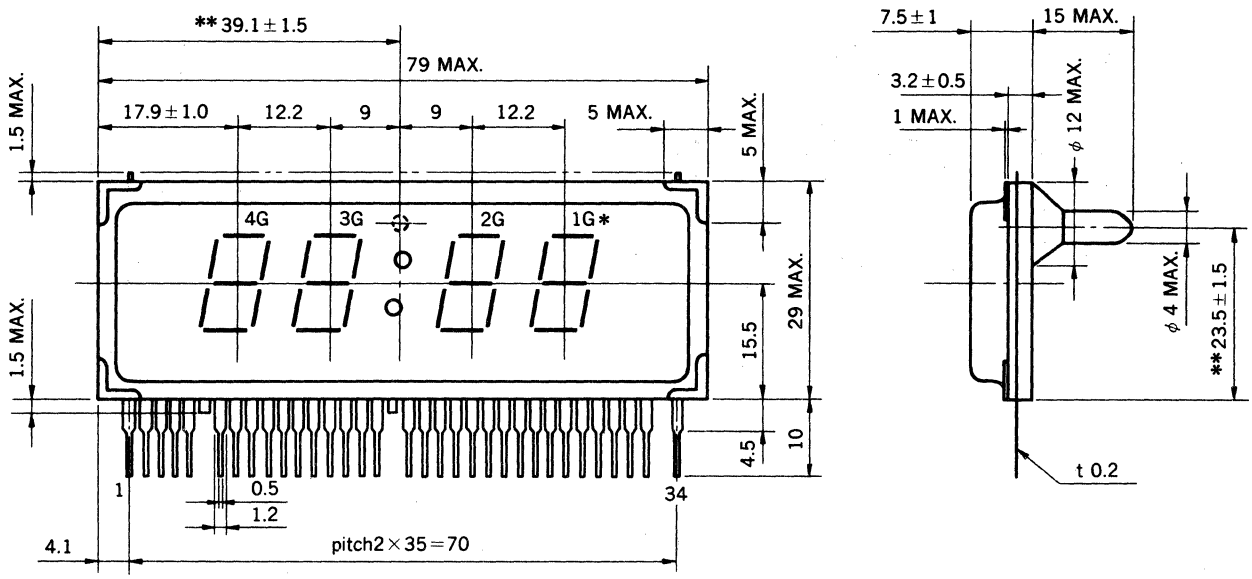

PY1125

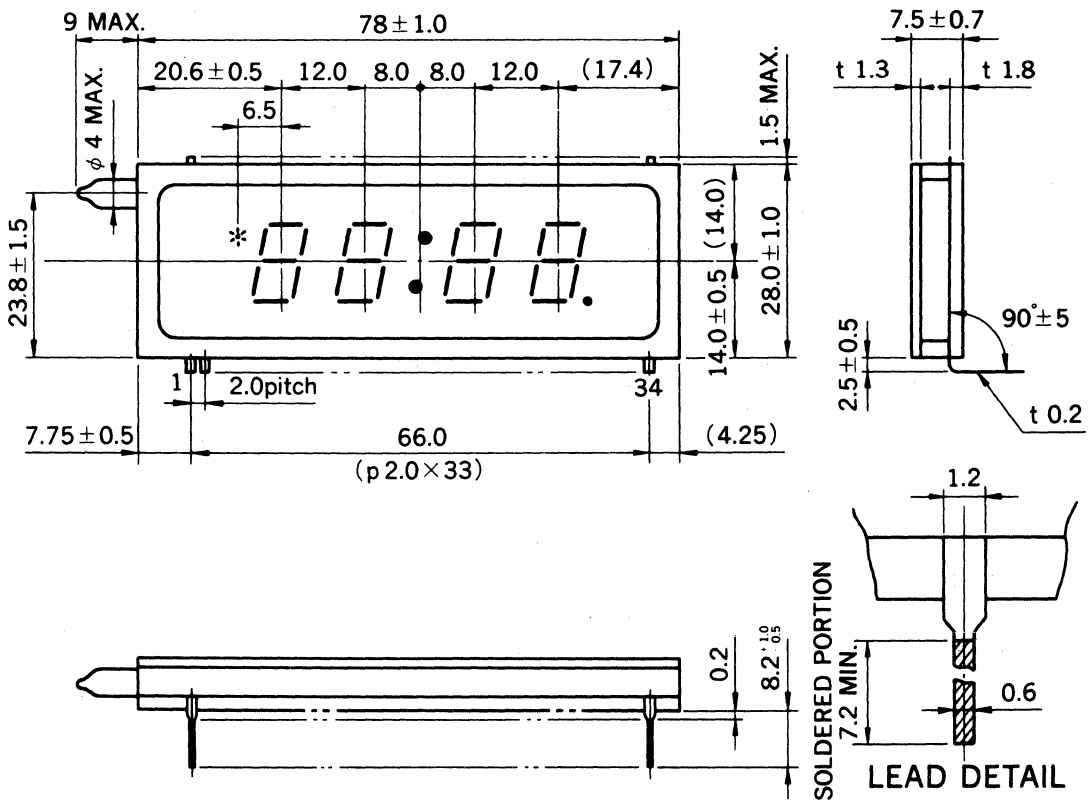

49. OUTLINE DRAWINGS

PY1126

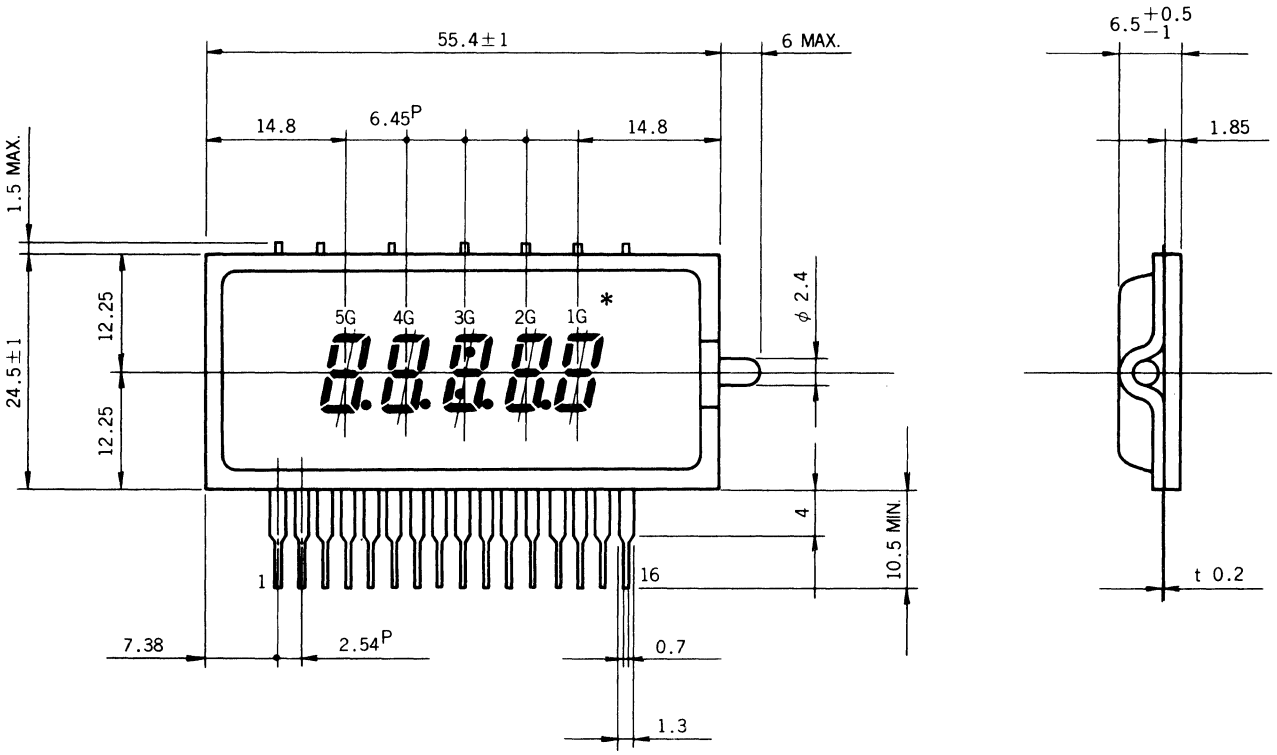

PY1127

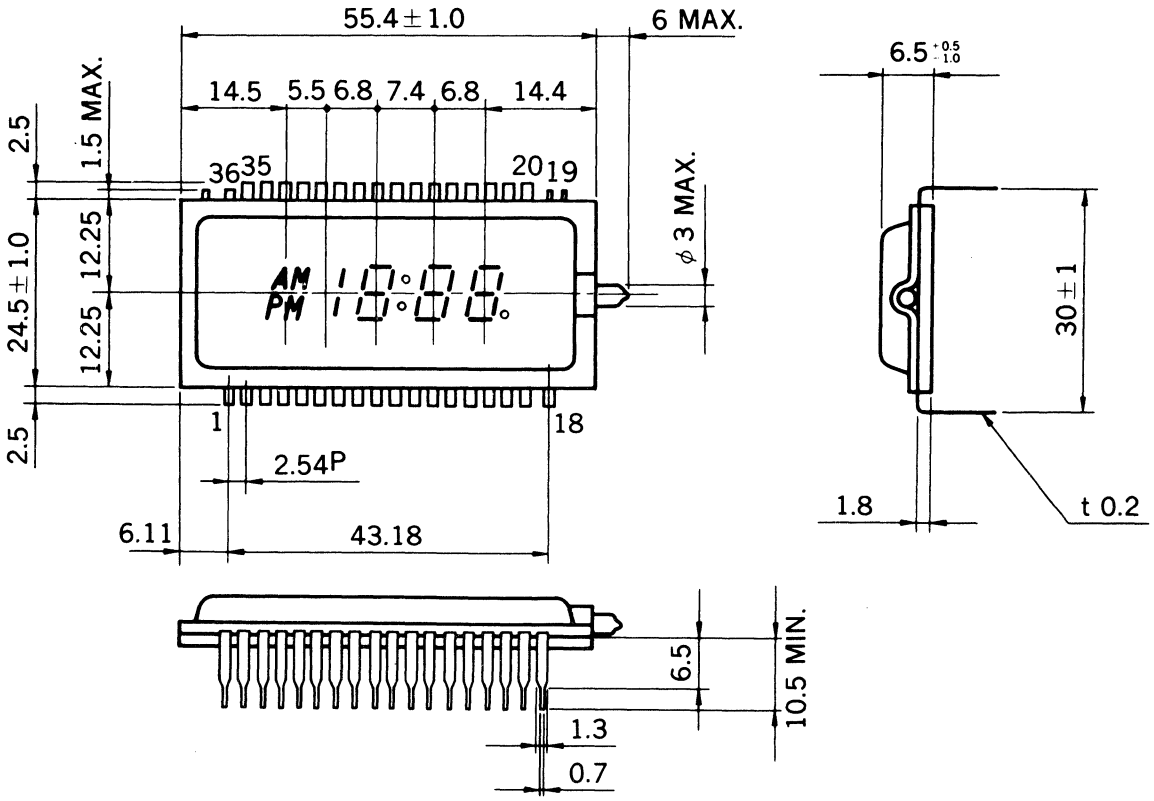

49. OUTLINE DRAWINGS

PY1128

Leads are bent 90% to 11.5 mm max. length

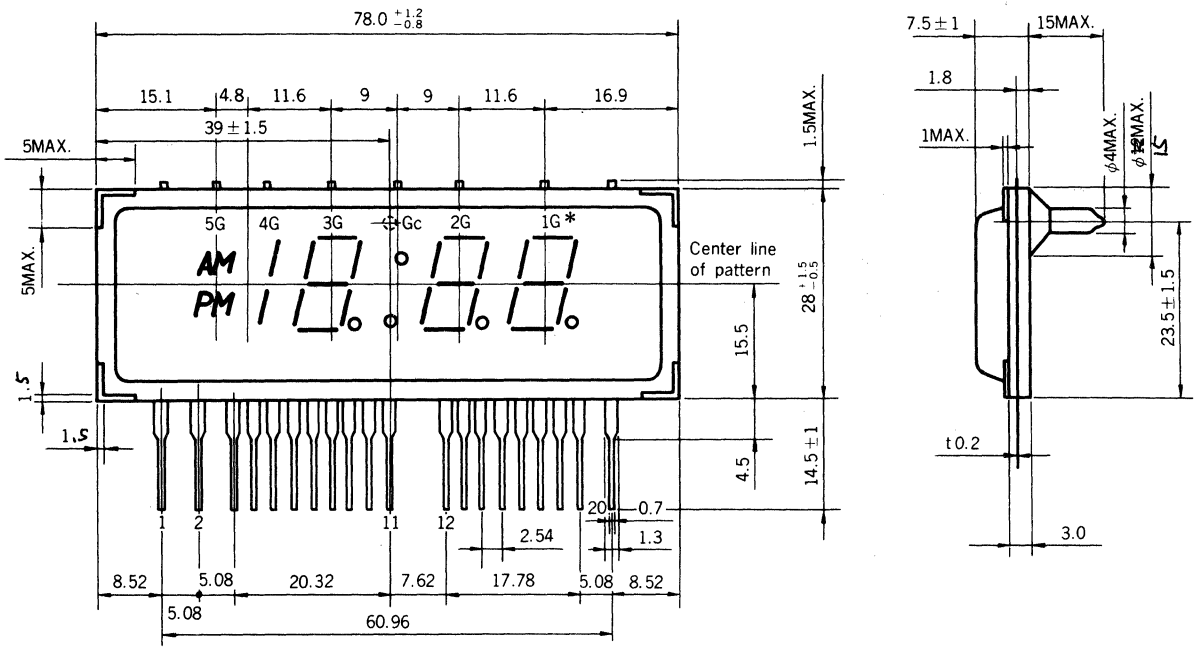

PY1196

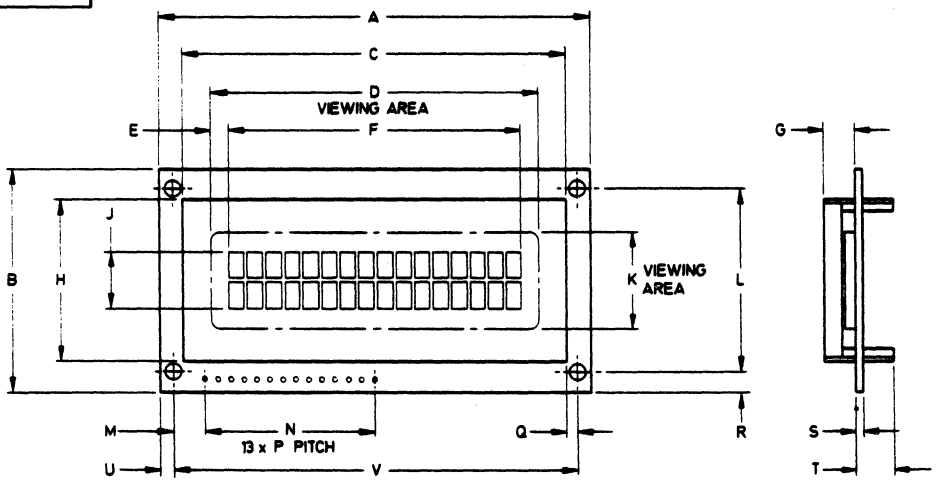

Ref	Millimetres	Inches	Ref	Millimetres	Inches	Ref	Millimetres	Inches
A	84.0	3.307	H	32.5	1.280	Q	2.0	0.079
B	44.0	1.732	J	11.3	0.445	R	4.0	0.157
C	75.0	2.953	K	19.0	0.748	S	1.6	0.063
D	64.0	2.520	L	36.0	1.417	T	8.6 max	0.339 max
E	3.5	0.138	M	6.0	0.236	U	2.5	0.098
F	56.9	2.240	N	33.02	1.300	V	79.0	3.110
G	6.4	0.252	P	2.54	0.100			

49. OUTLINE DRAWINGS

PY1130

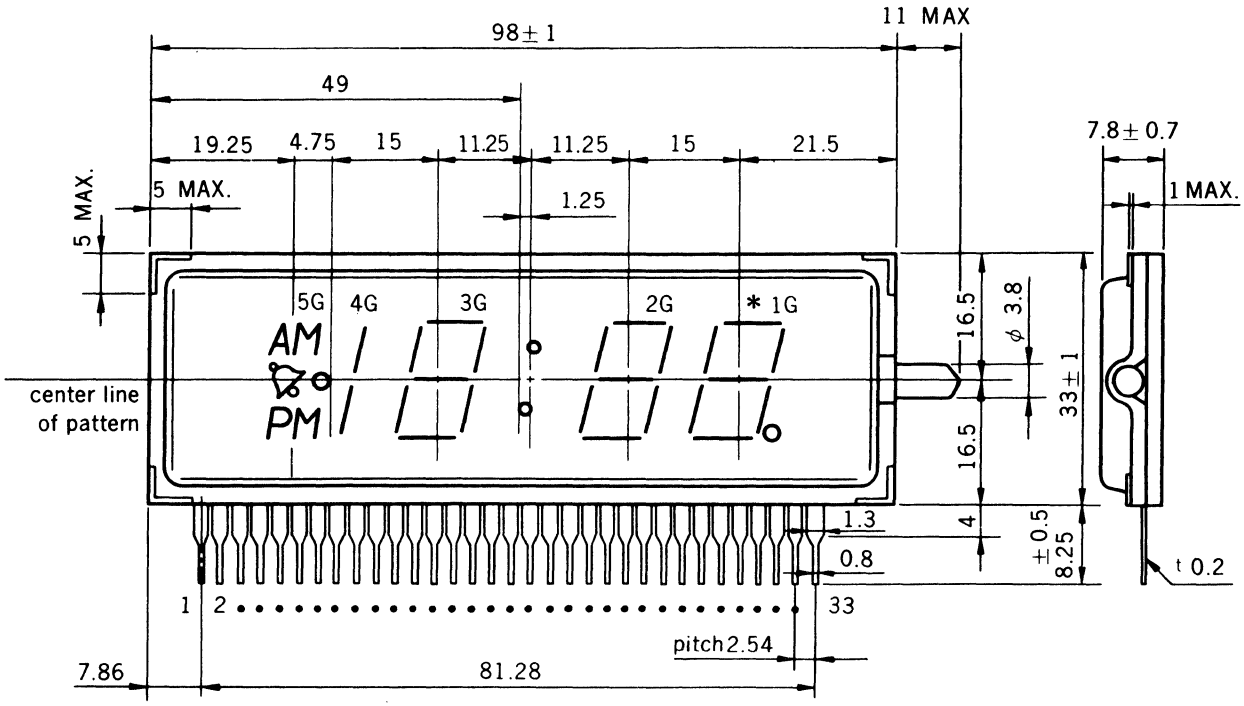

PY1131

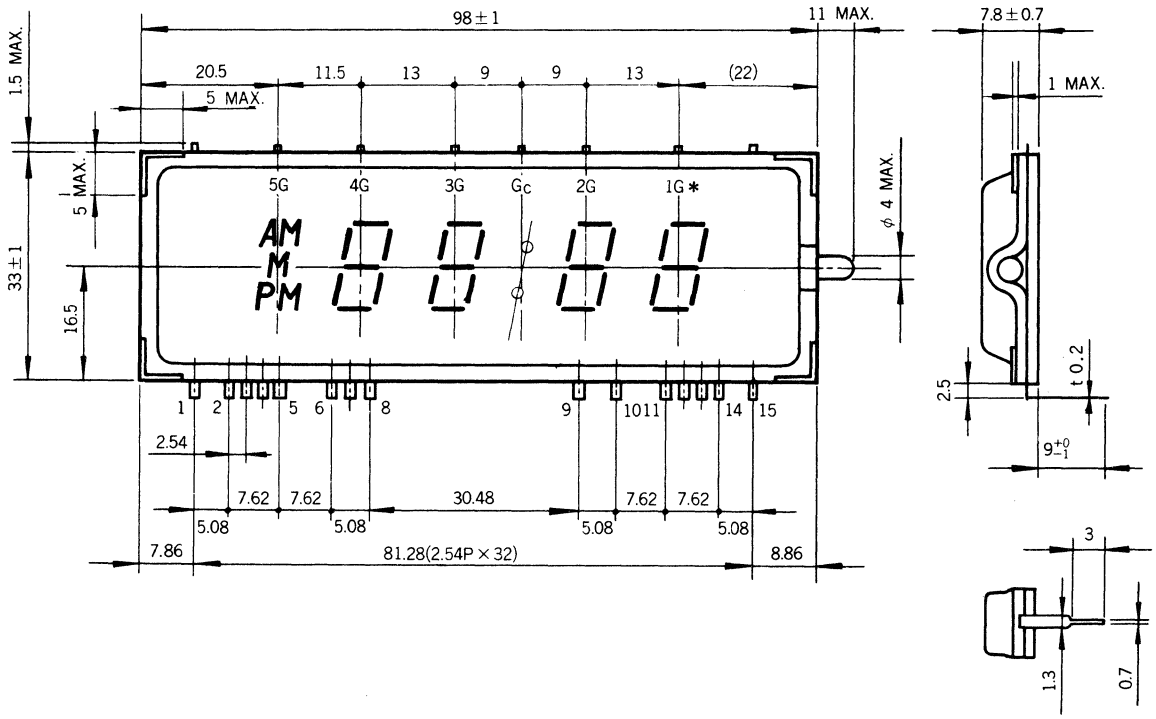

49. OUTLINE DRAWINGS

PY1132

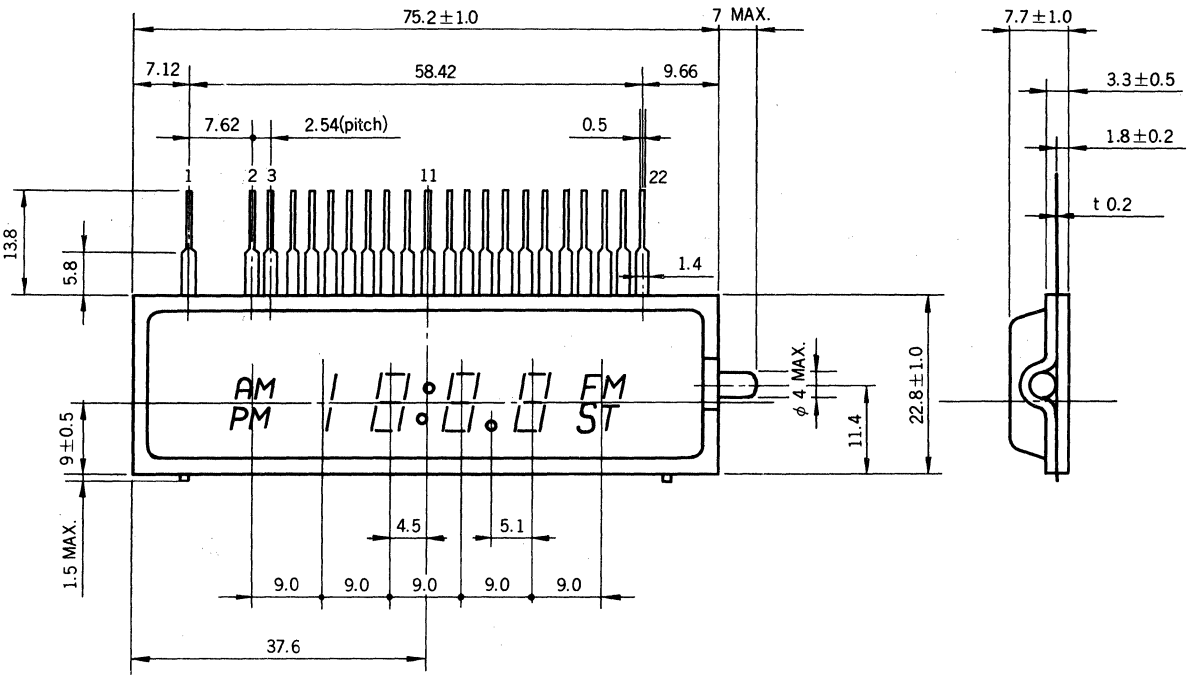

PY1133

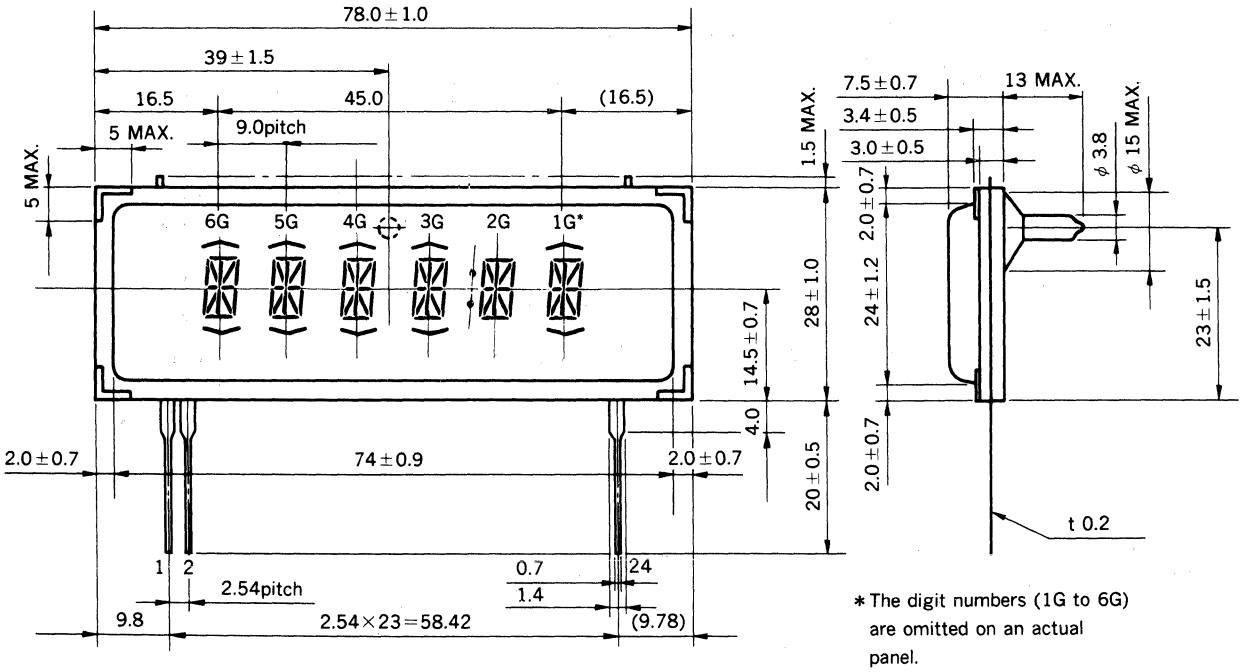

* The digit numbers (1G to 6G) are omitted on an actual panel.

49. OUTLINE DRAWINGS

PY1134

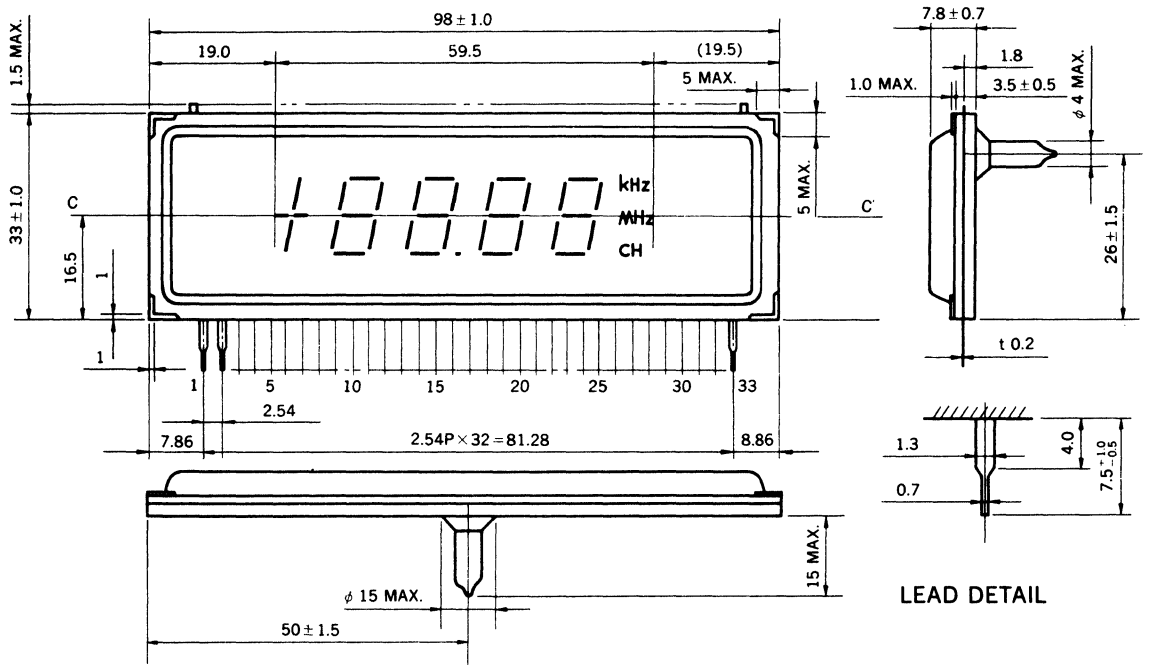

PY1135

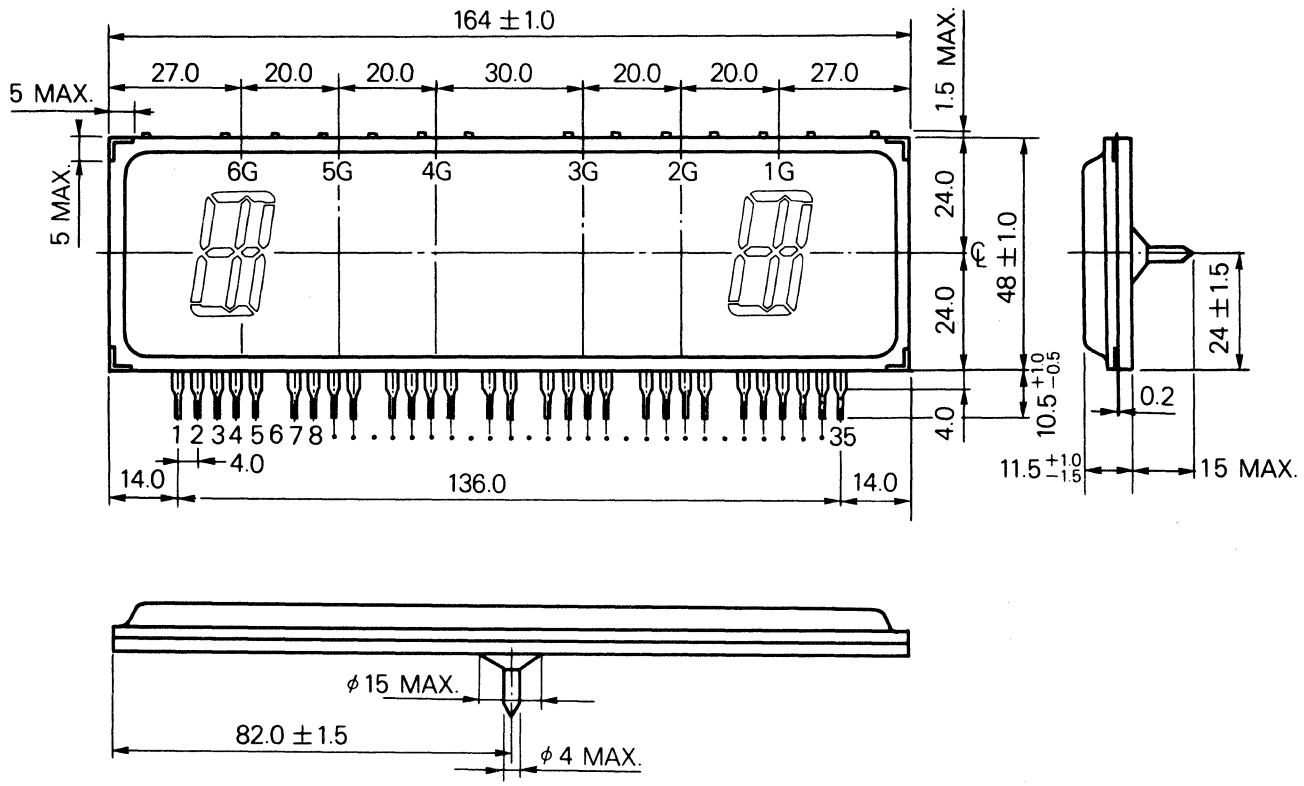

49. OUTLINE DRAWINGS

PY1136

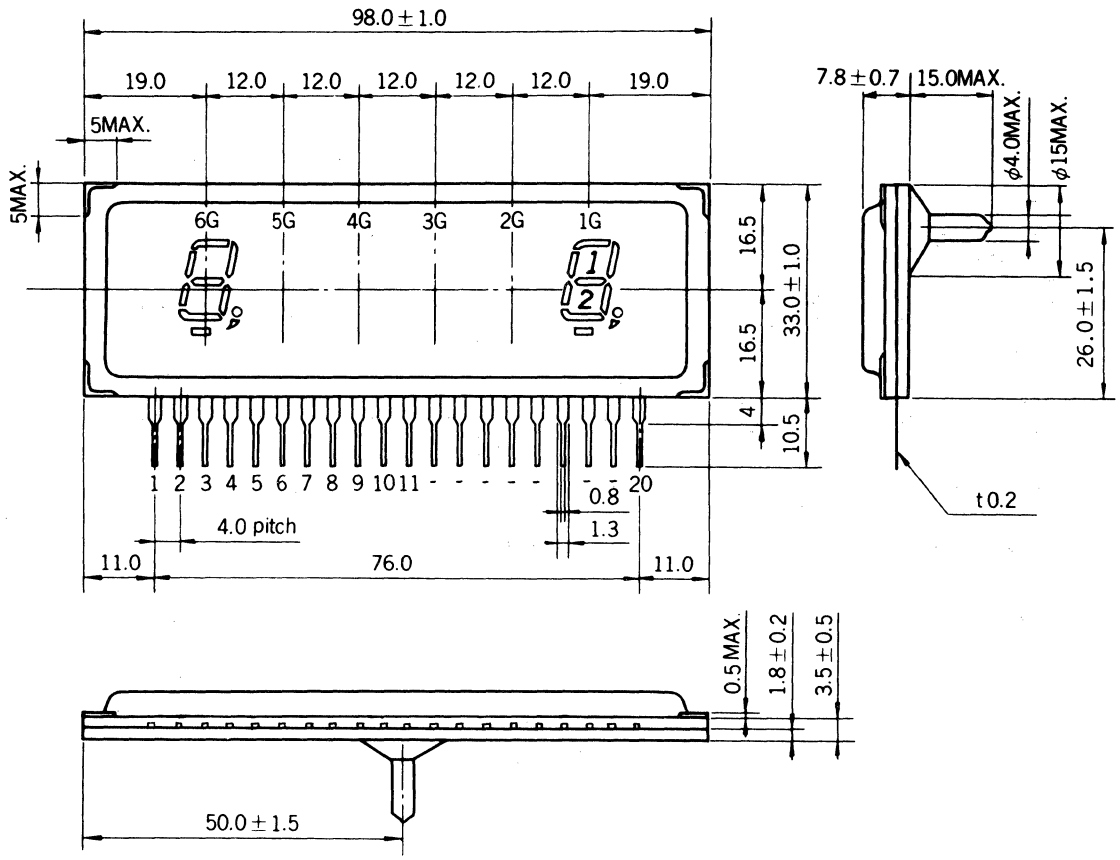

PY1137

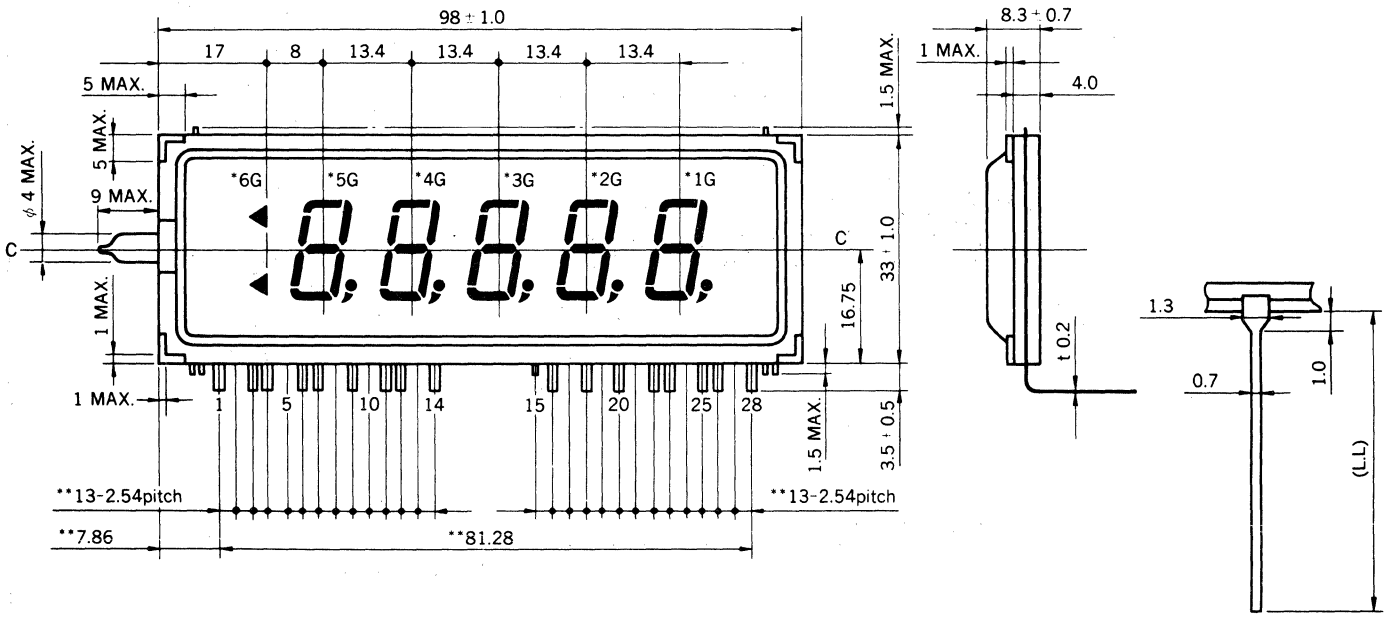

49. OUTLINE DRAWINGS

PY1138

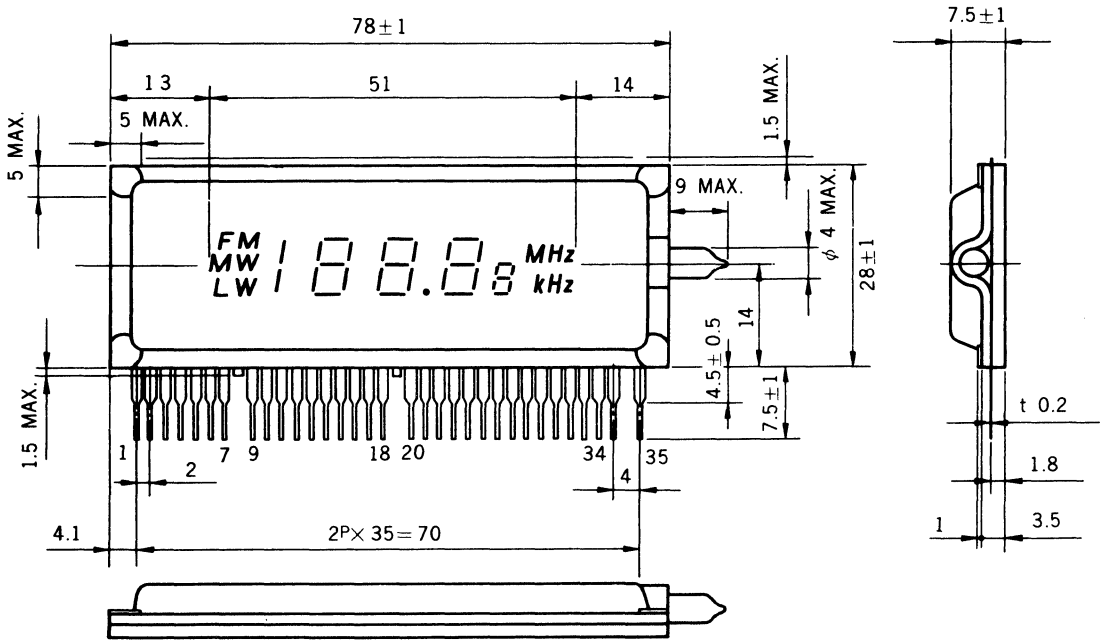

PY1139

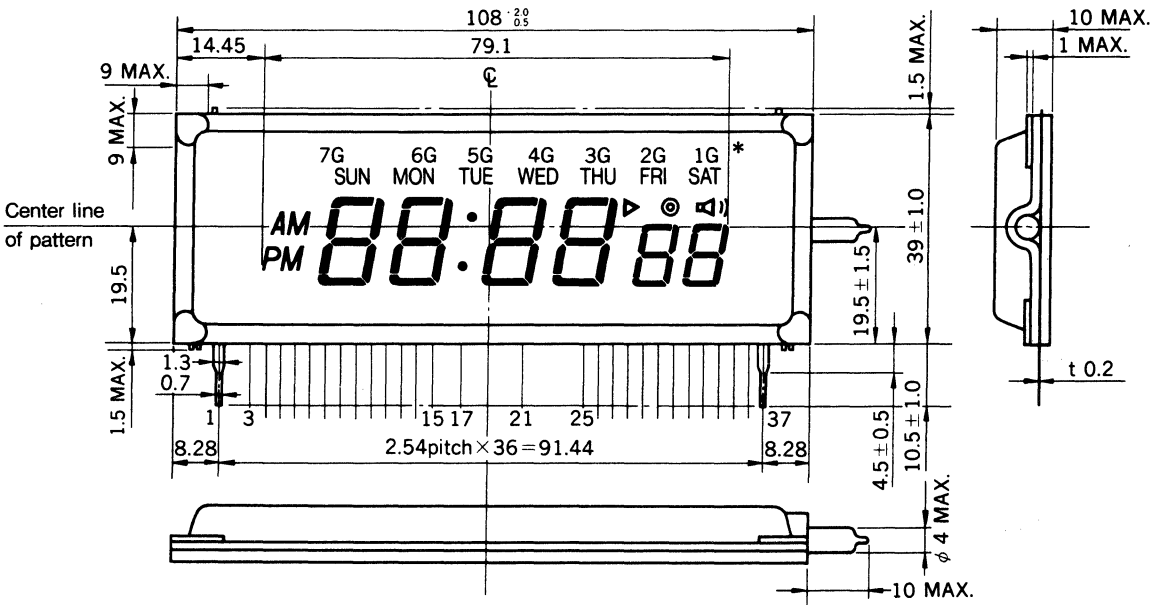

49. OUTLINE DRAWINGS

PY1140

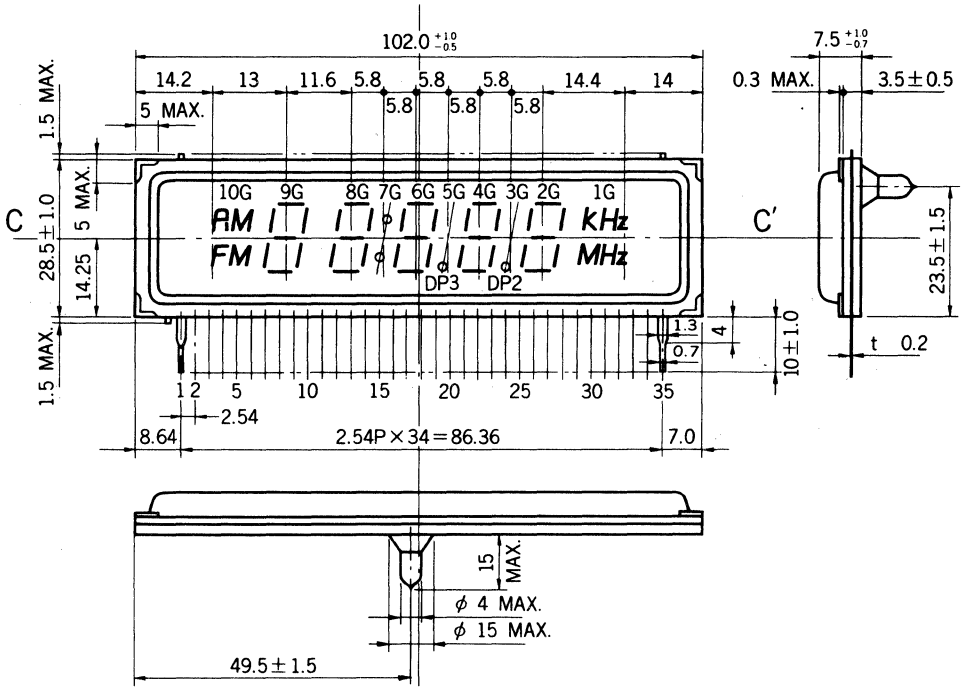

PY1141

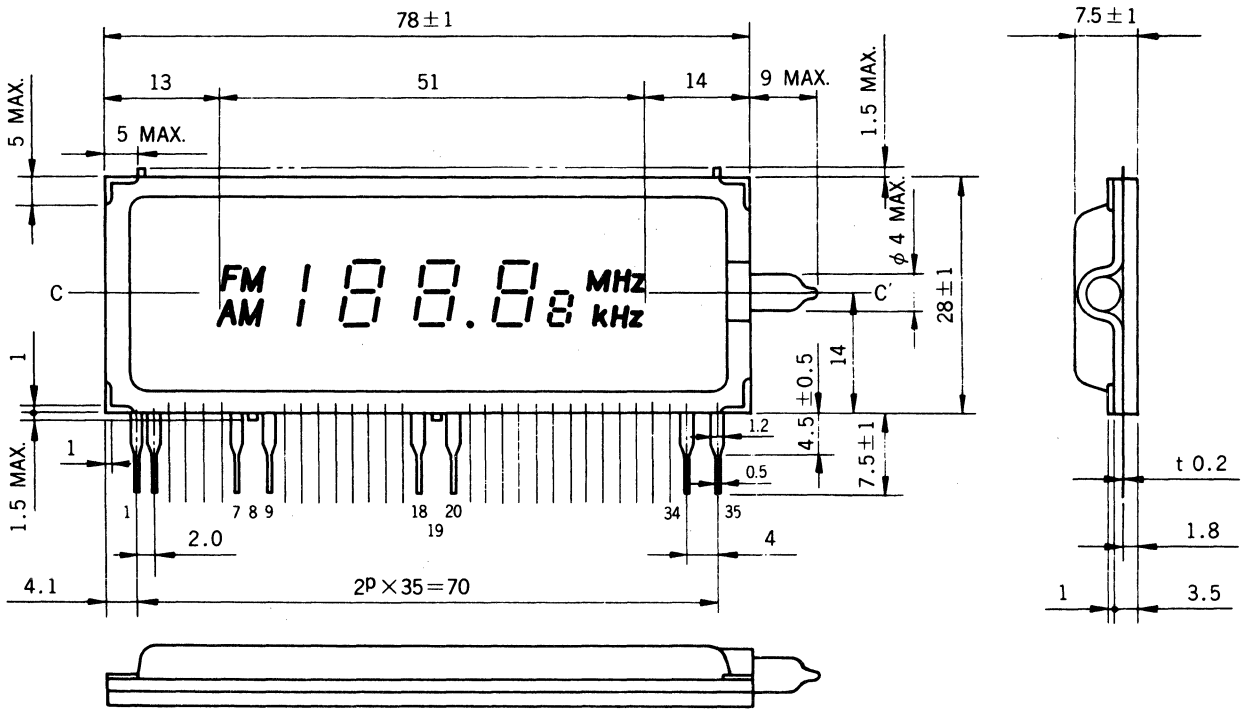

49. OUTLINE DRAWINGS

PY1142

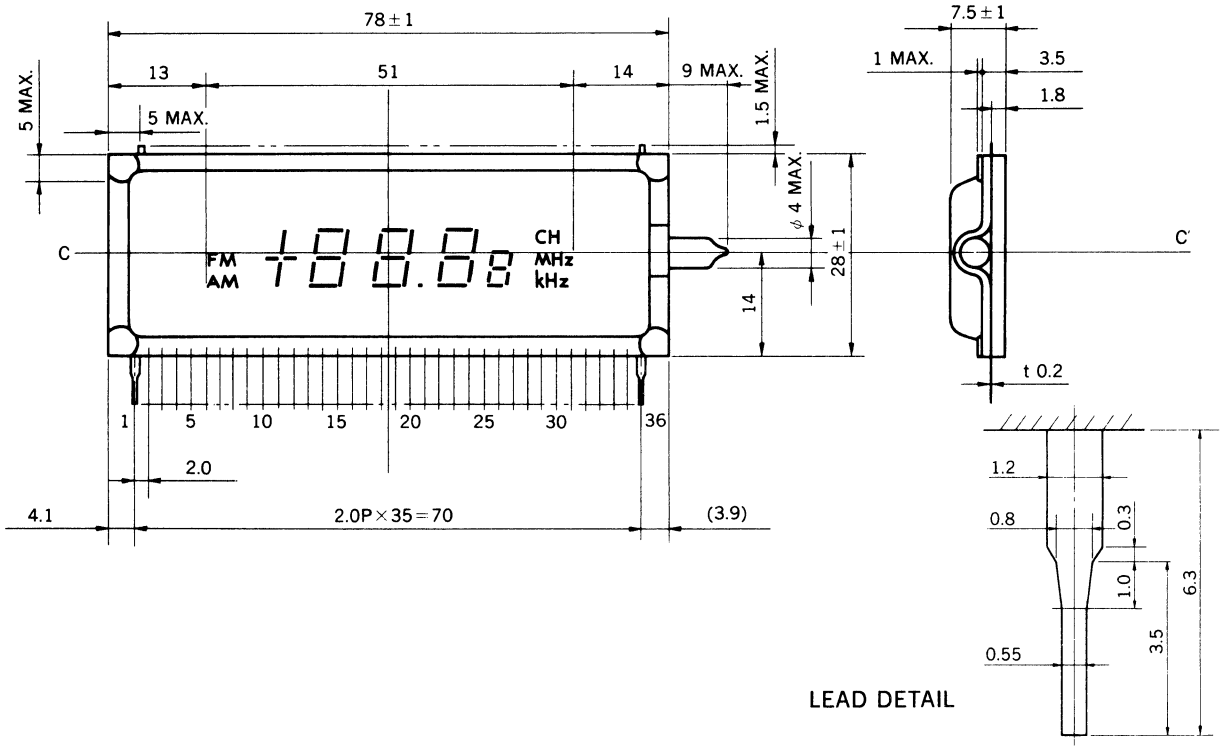

PY1143

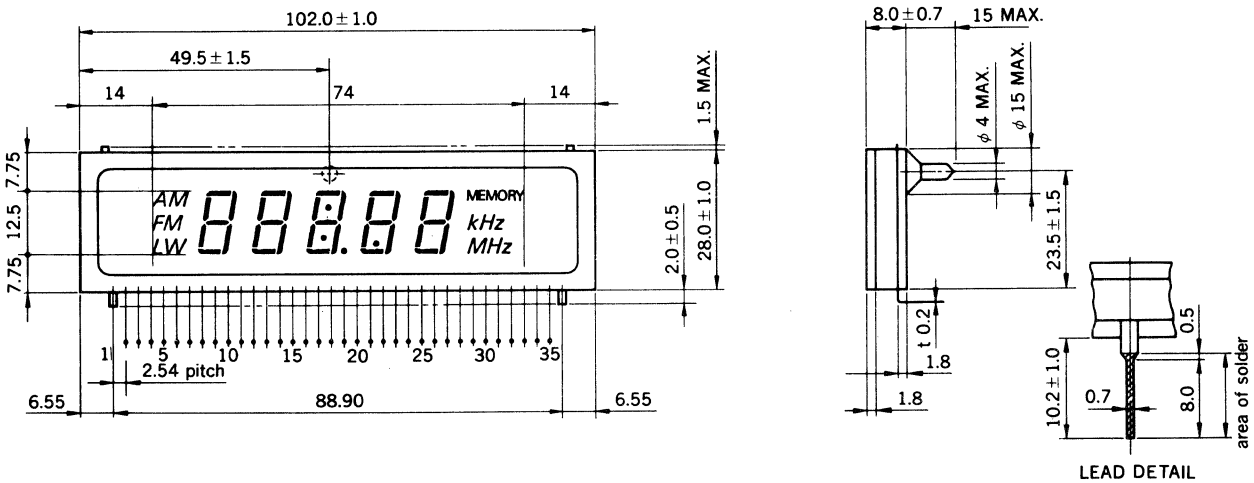

49. OUTLINE DRAWINGS

PY1144

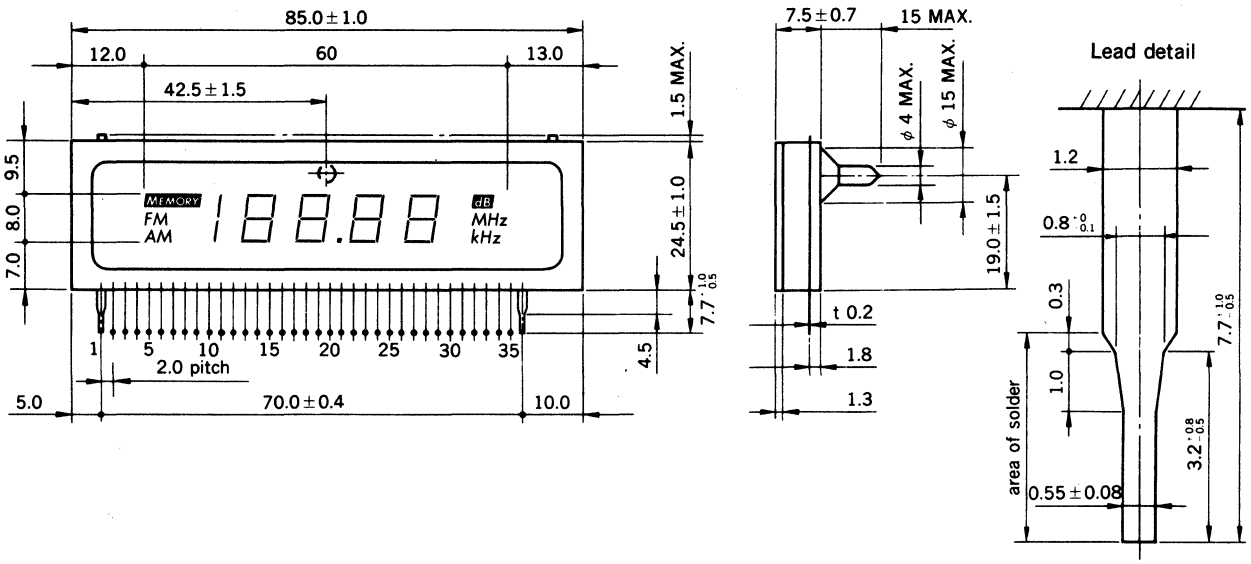

PY1145

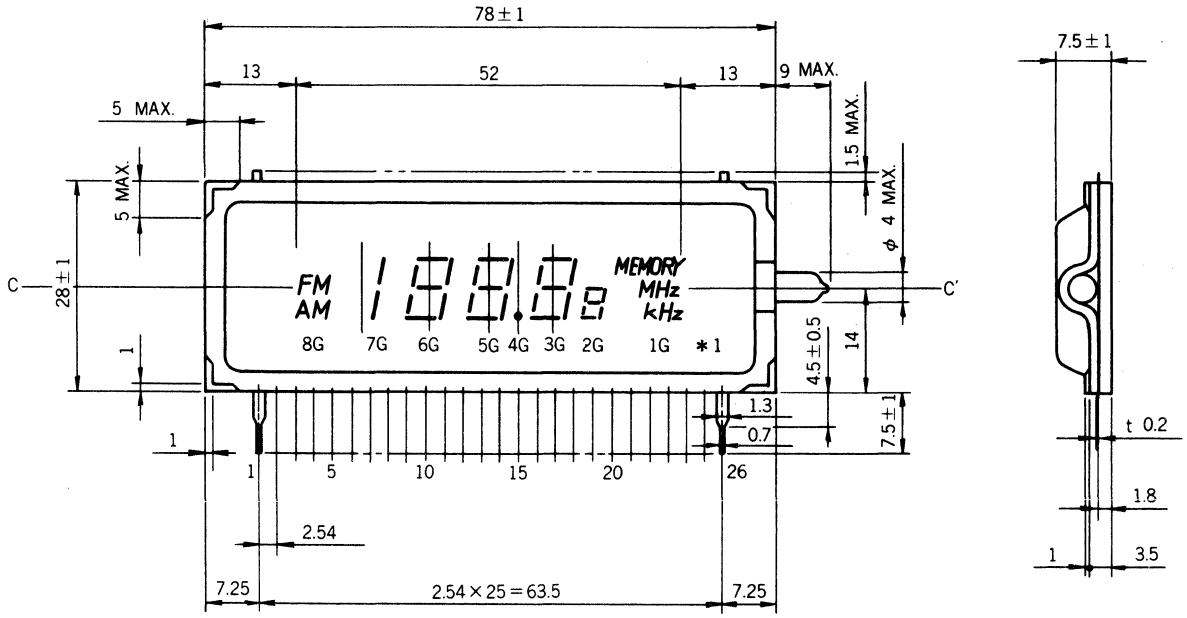

49. OUTLINE DRAWINGS

PY1146

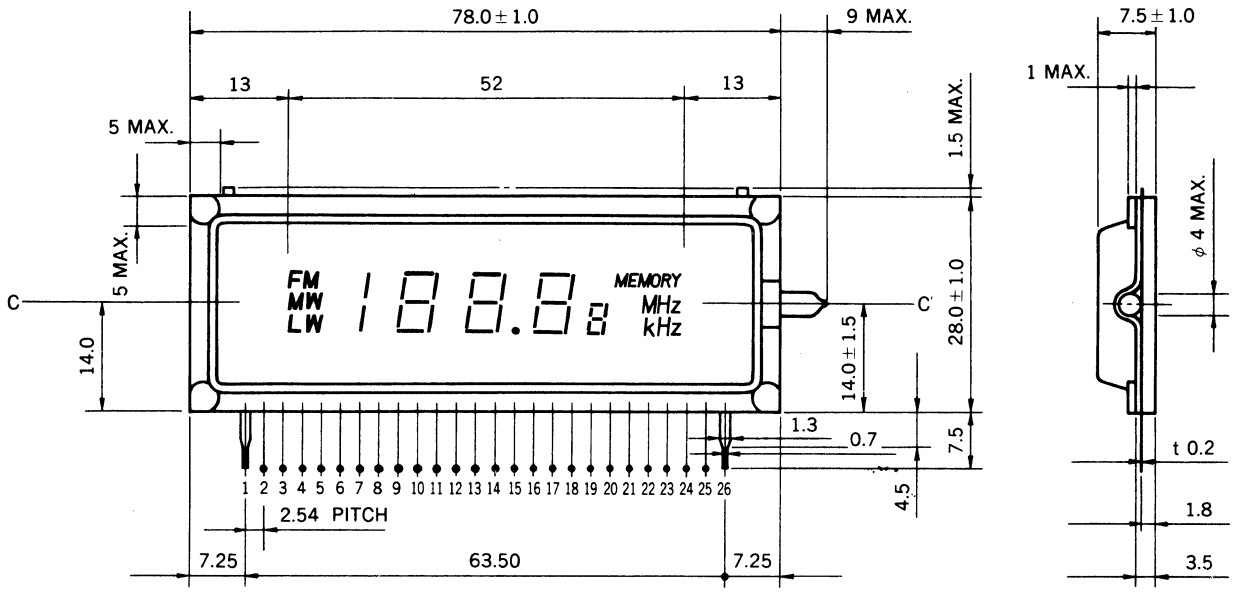

PY1147

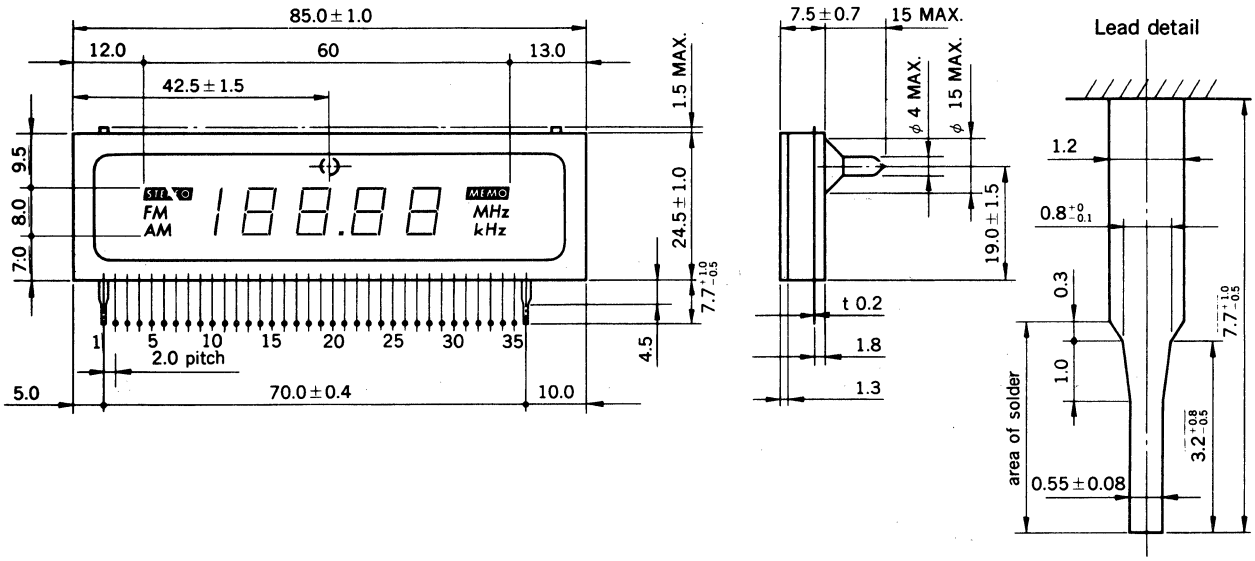

49. OUTLINE DRAWINGS

PY1148

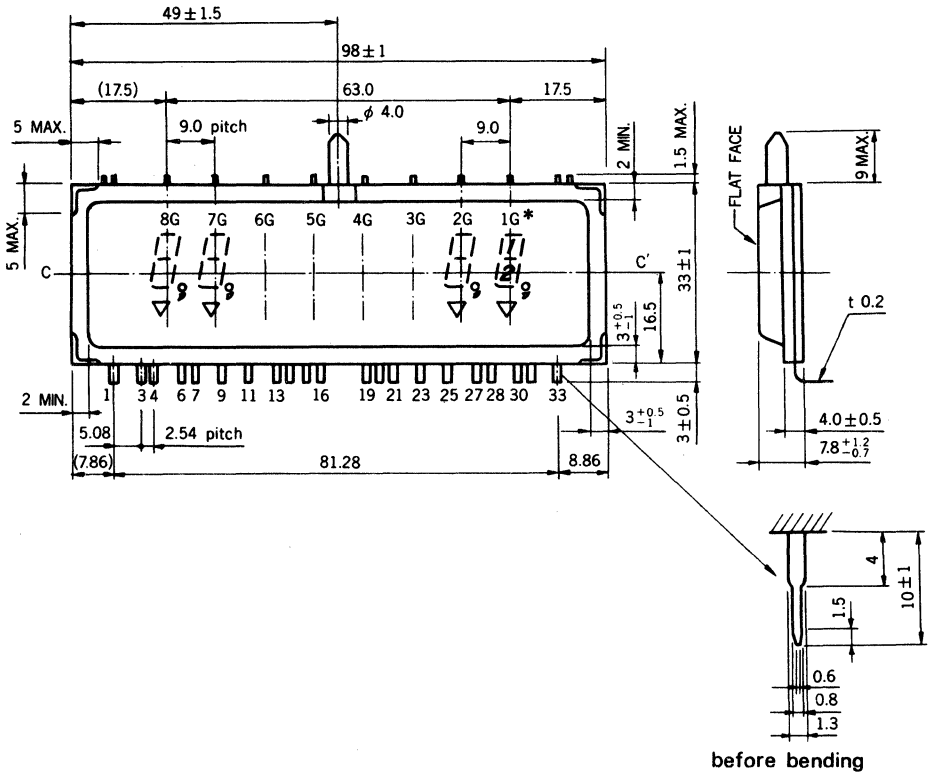

PY1149

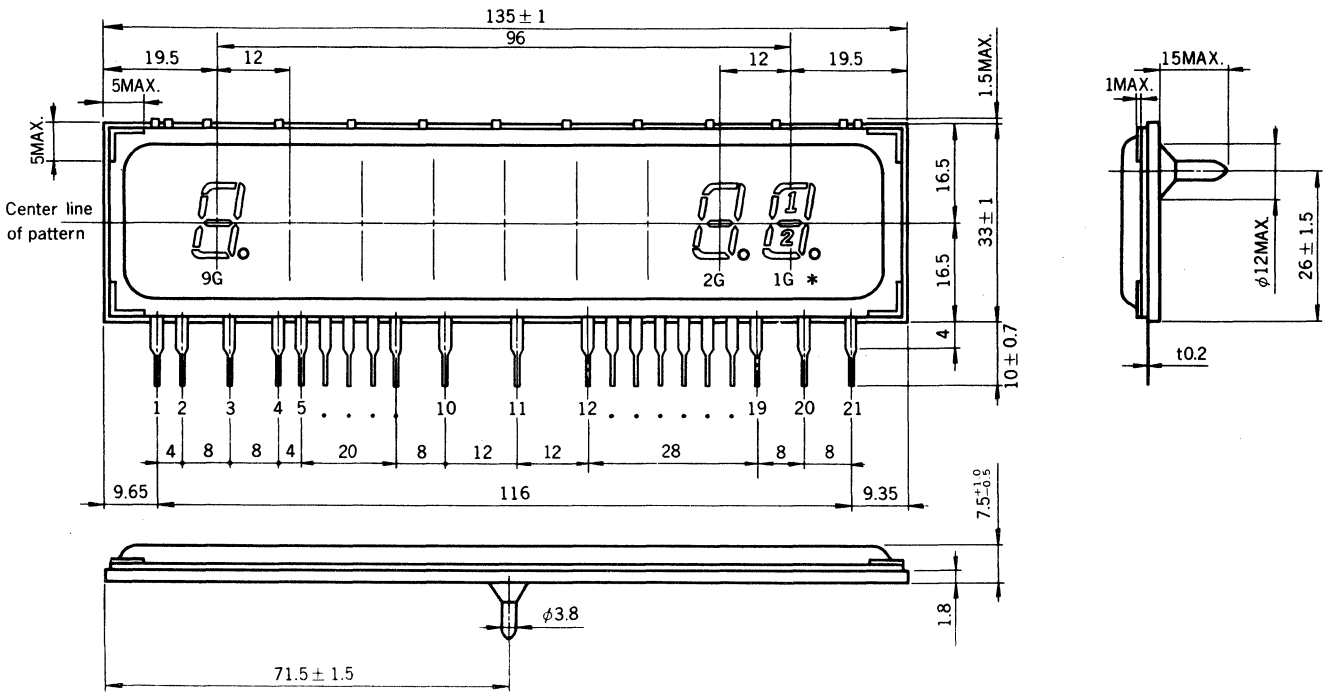

49. OUTLINE DRAWINGS

PY1150

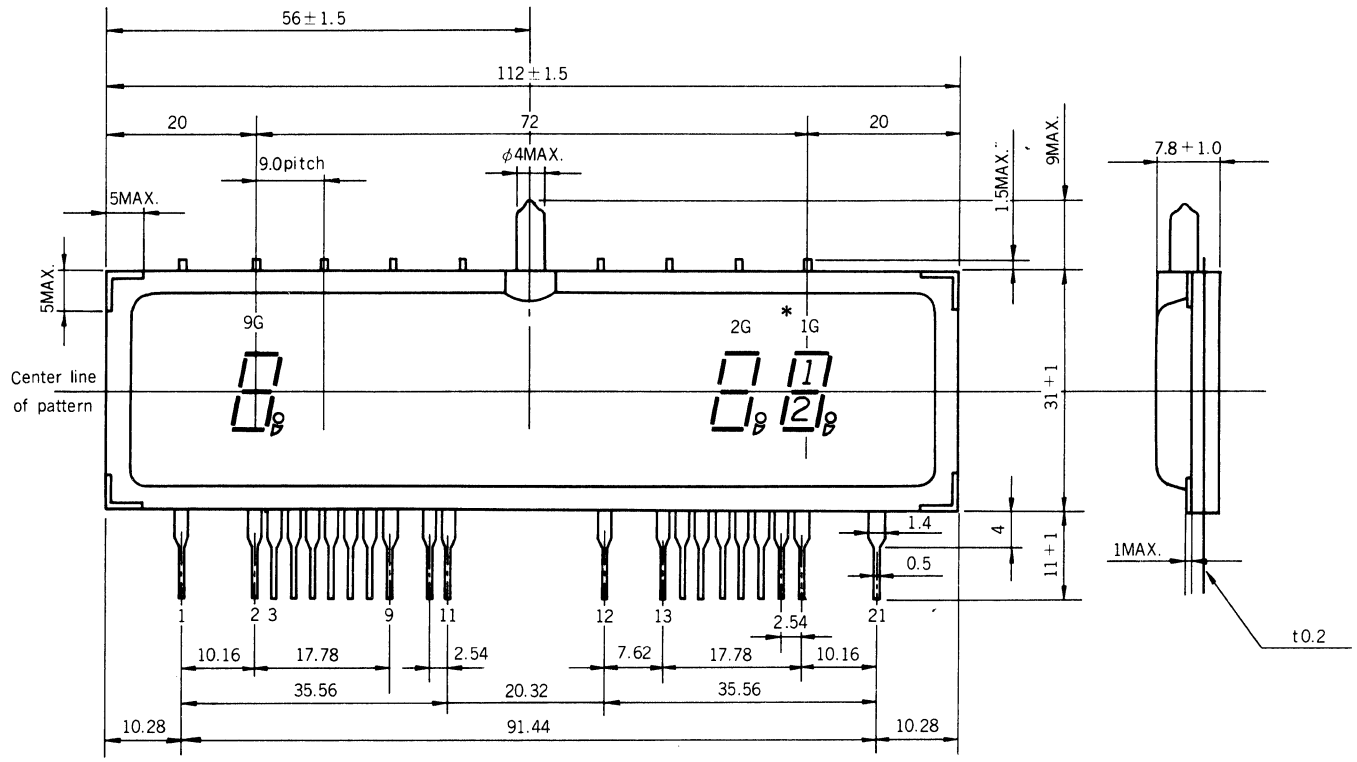

PY1151

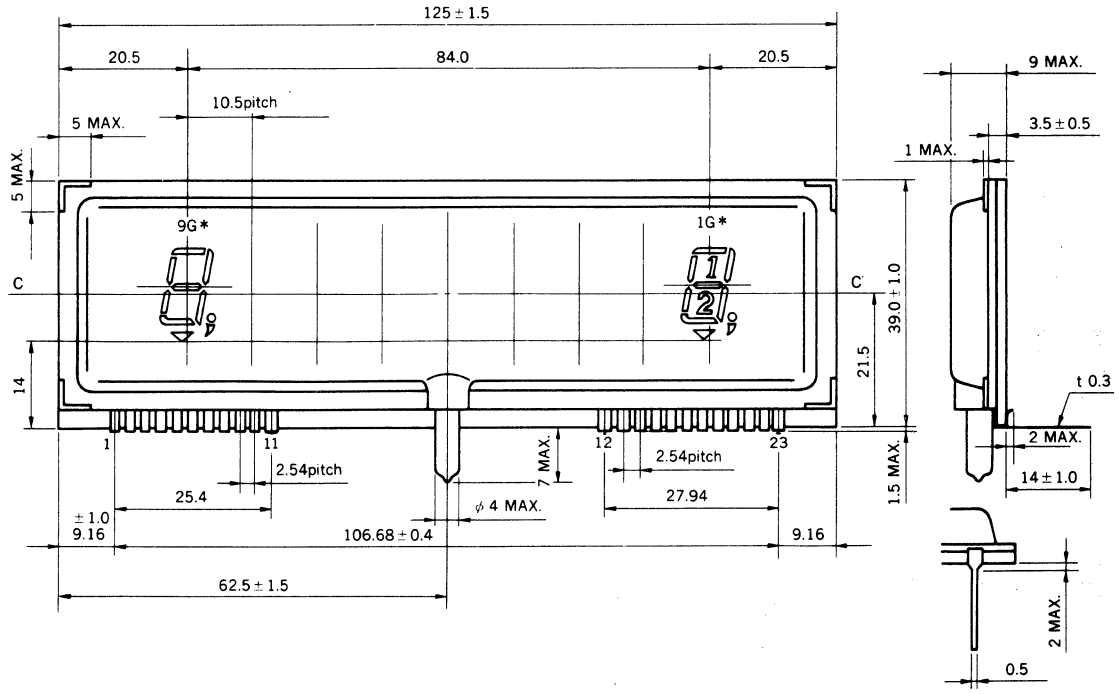

49. OUTLINE DRAWINGS

PY1152

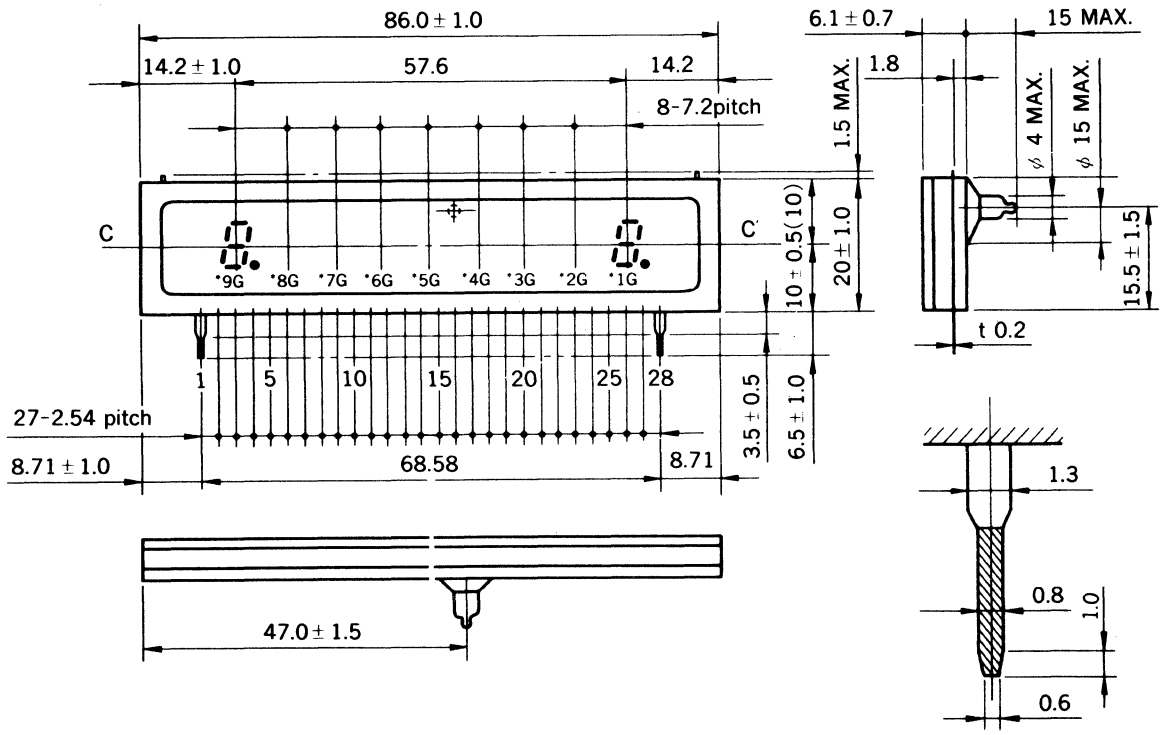

PY1157

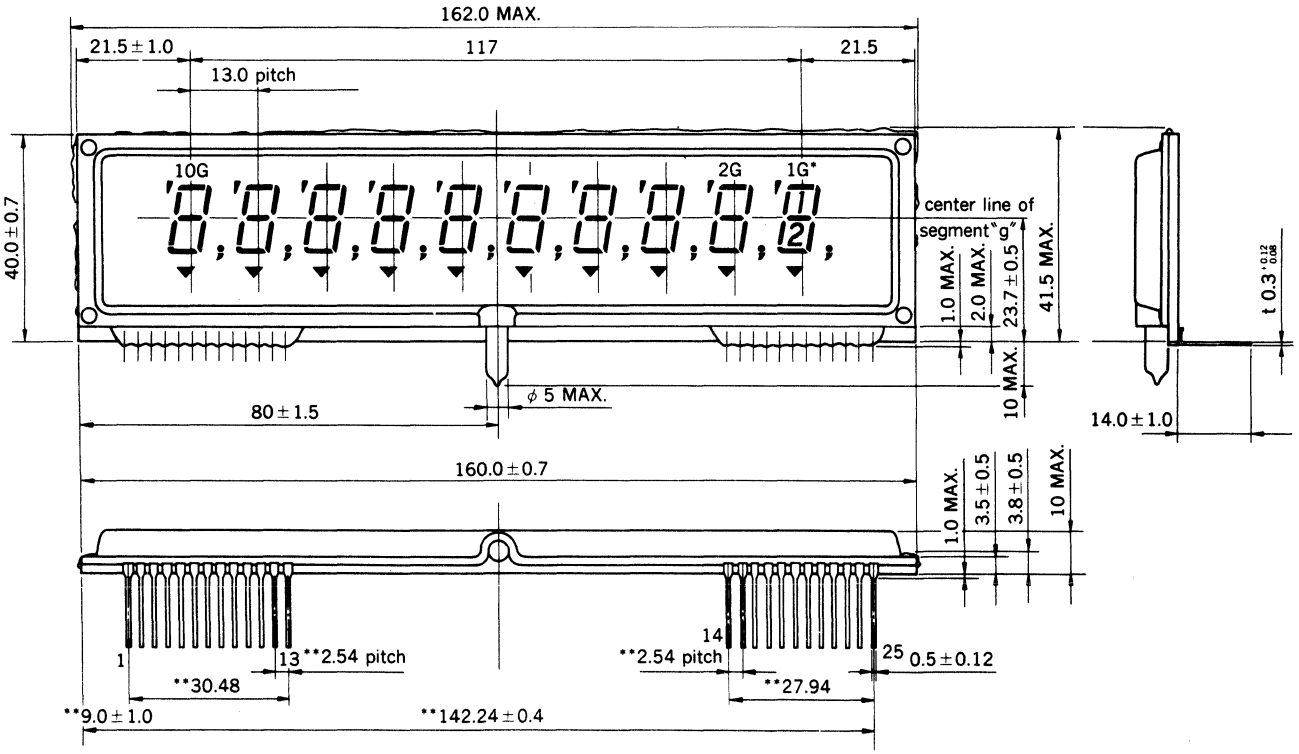

49. OUTLINE DRAWINGS

PY1154

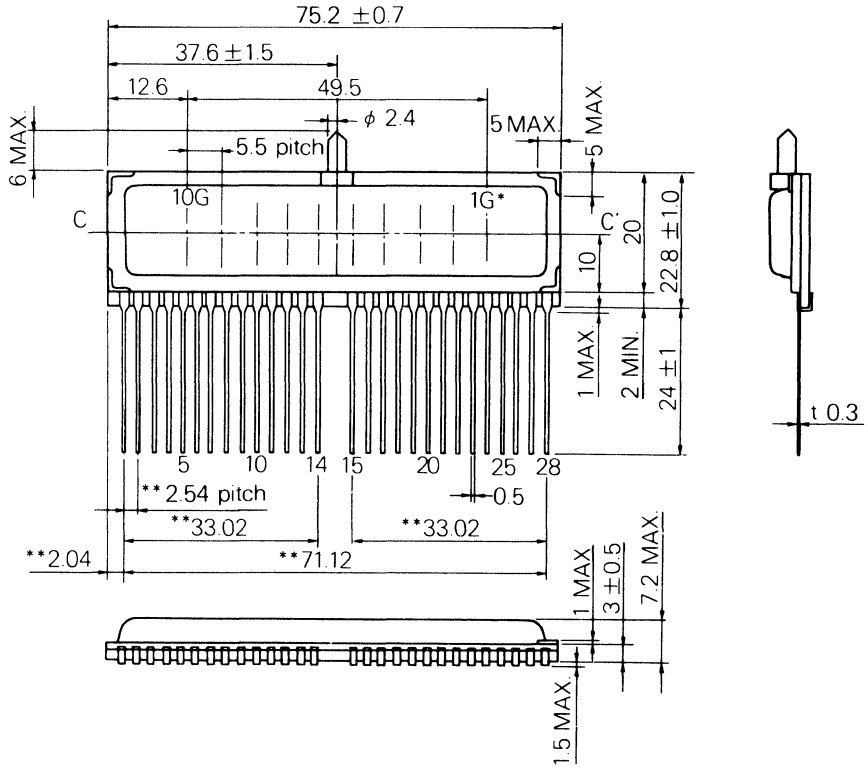

PY1155

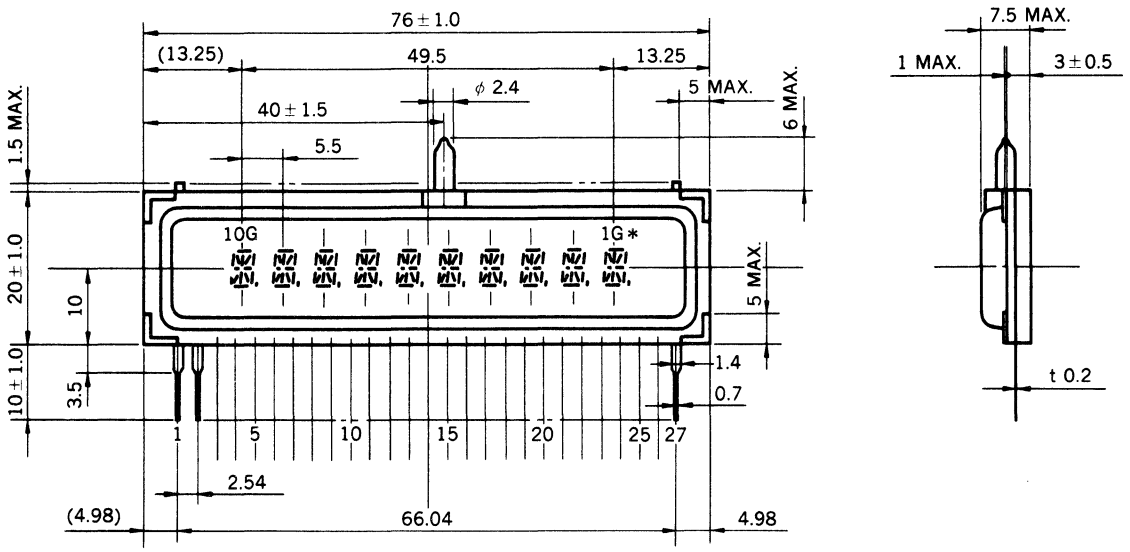

49. OUTLINE DRAWINGS

PY1158

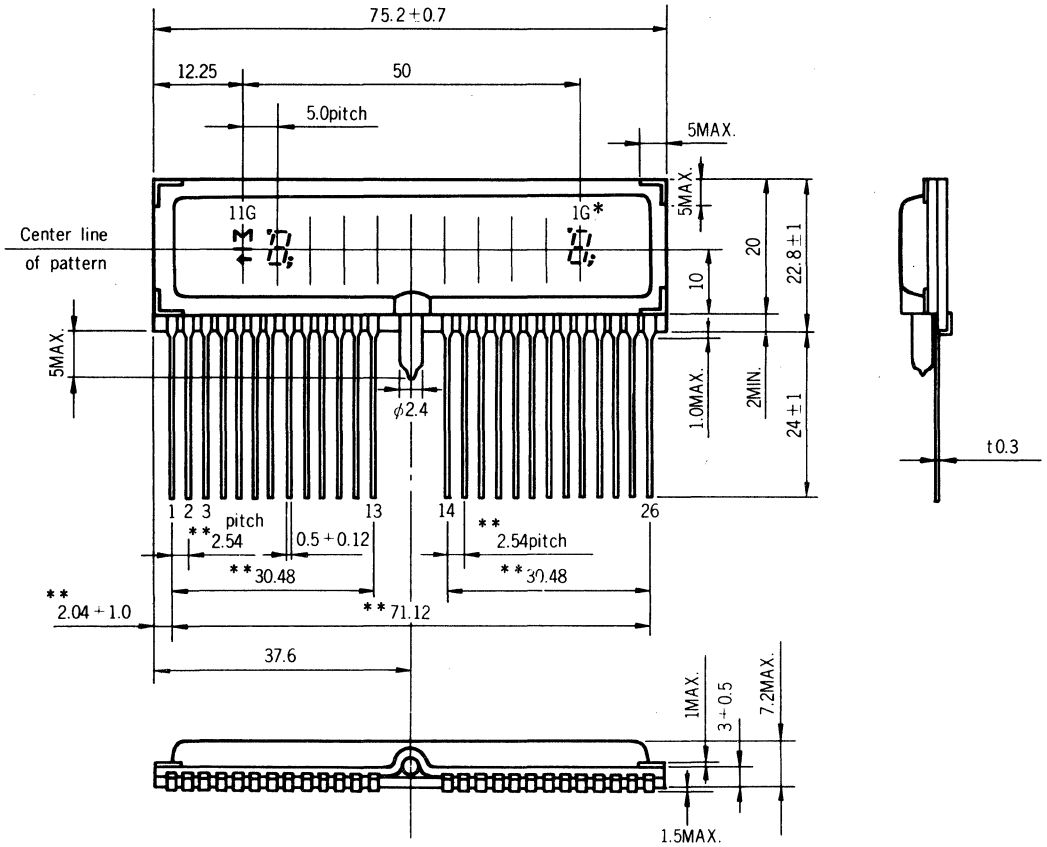

PY1159

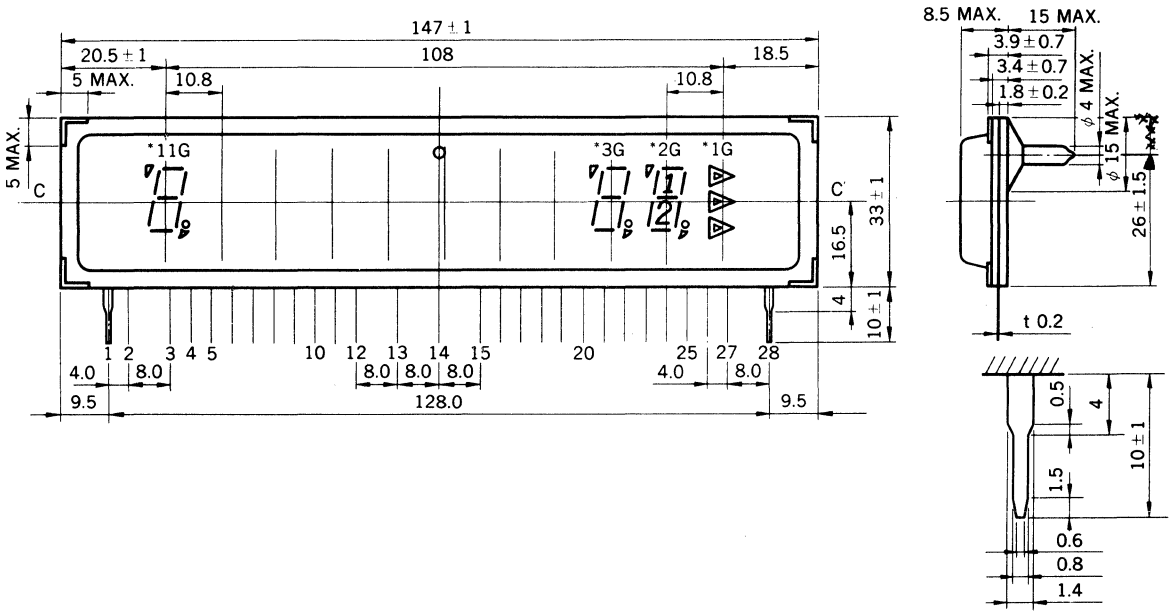

49. OUTLINE DRAWINGS

PY1160

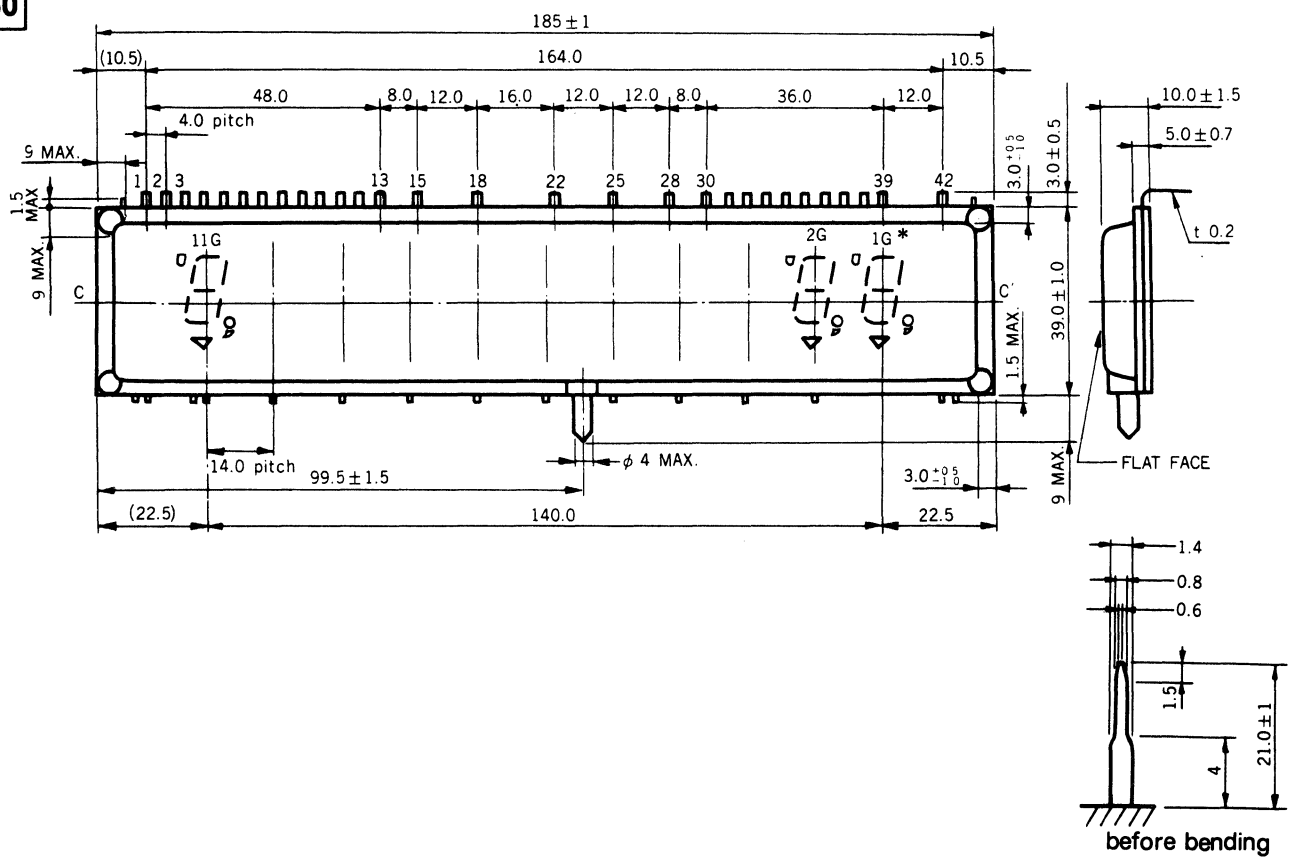

PY1161

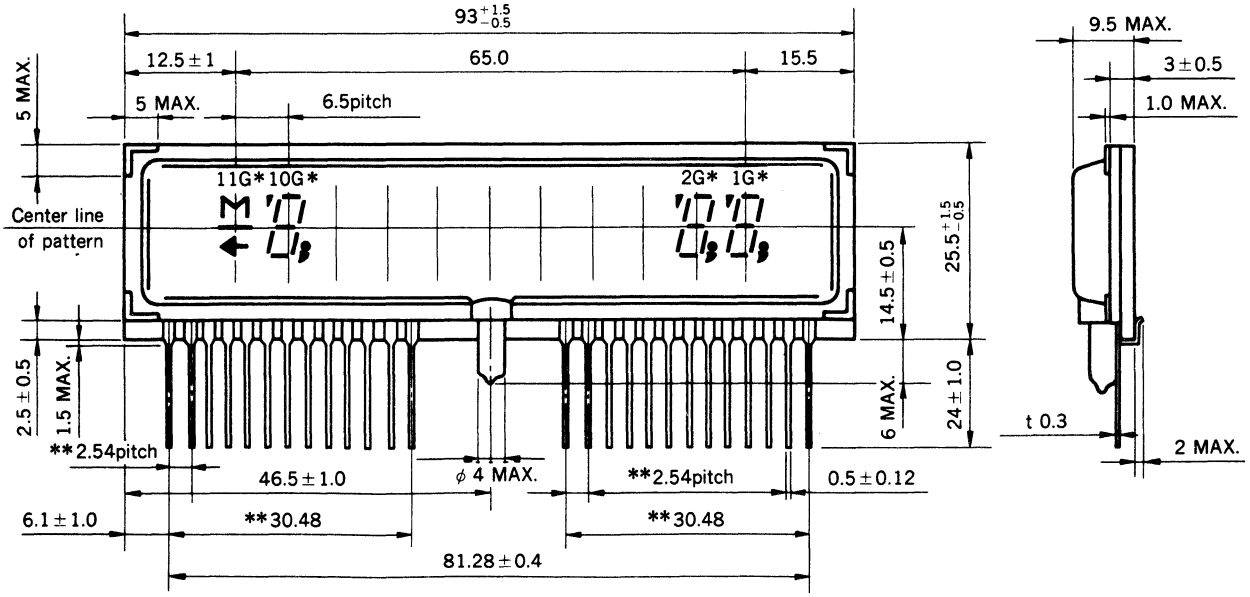

49. OUTLINE DRAWINGS

PY1162

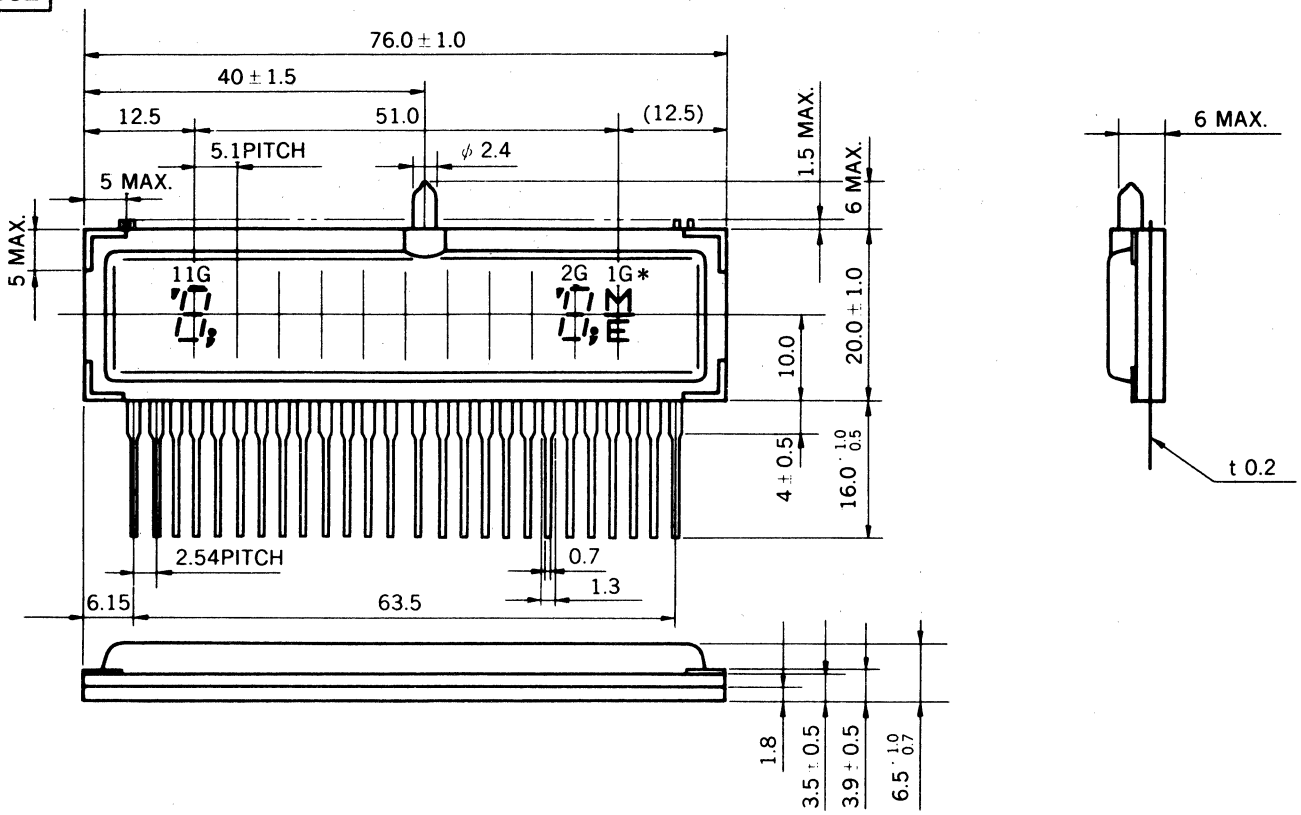

PY1163

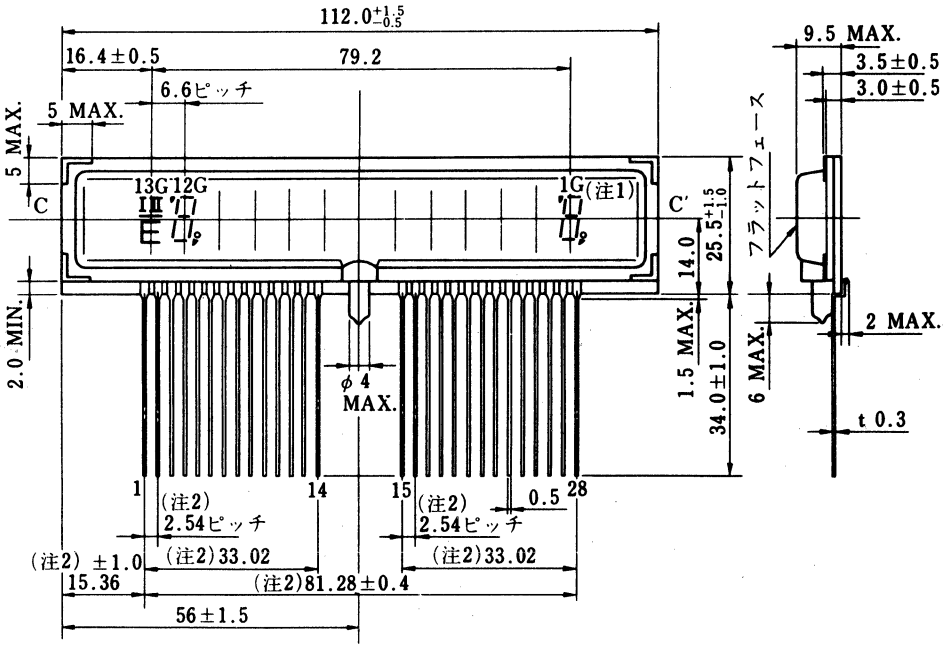

49. OUTLINE DRAWINGS

PY1164

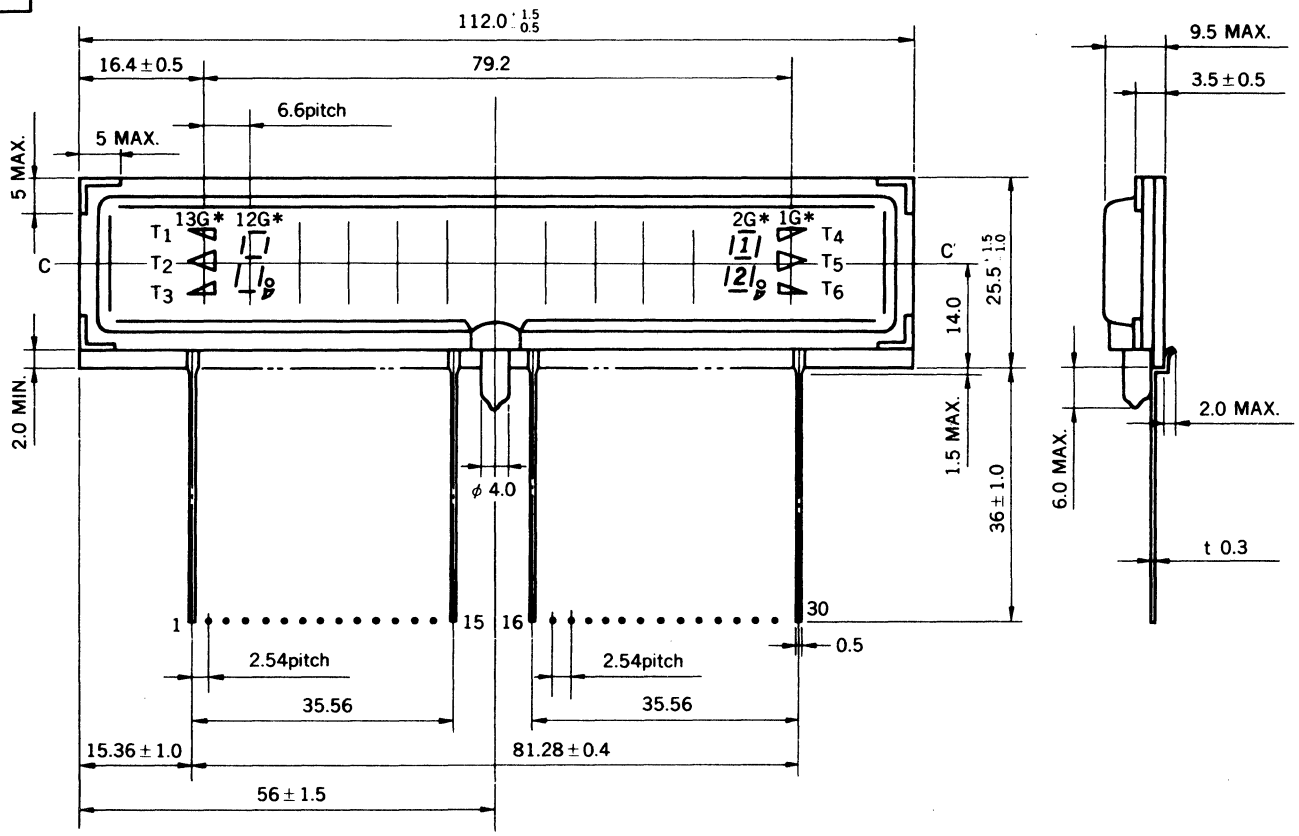

PY1165

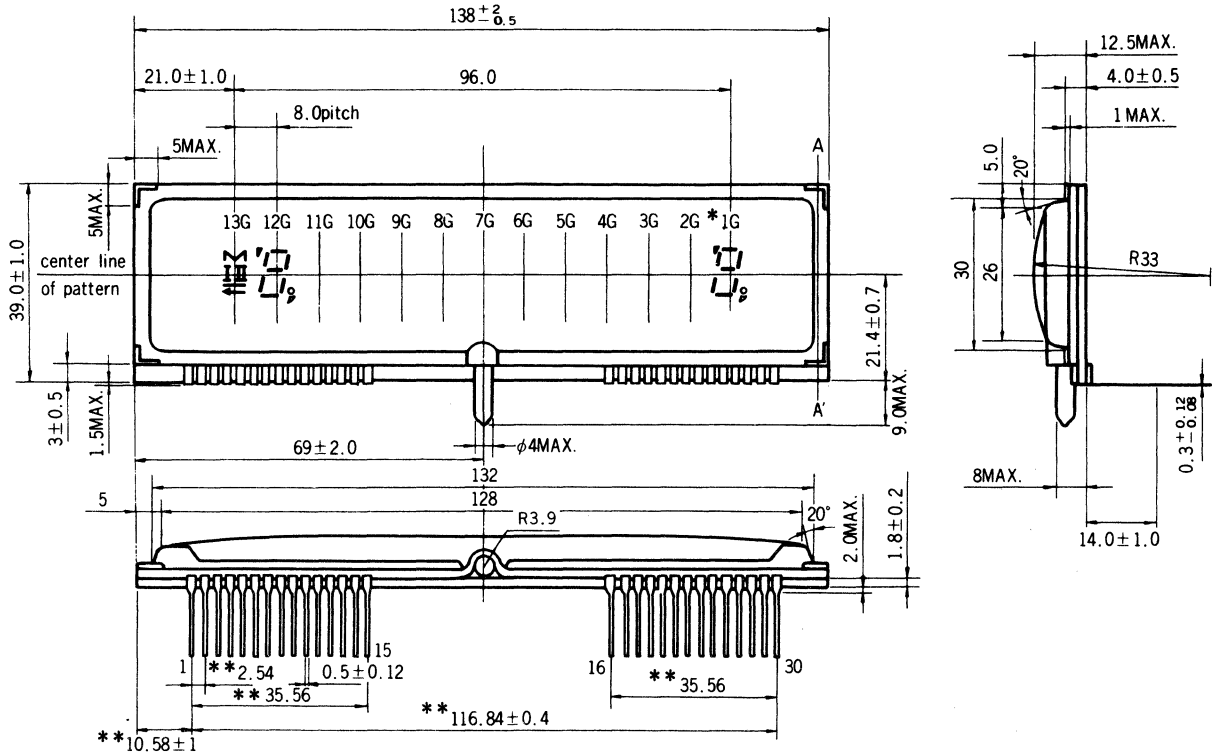

49. OUTLINE DRAWINGS

PY1166

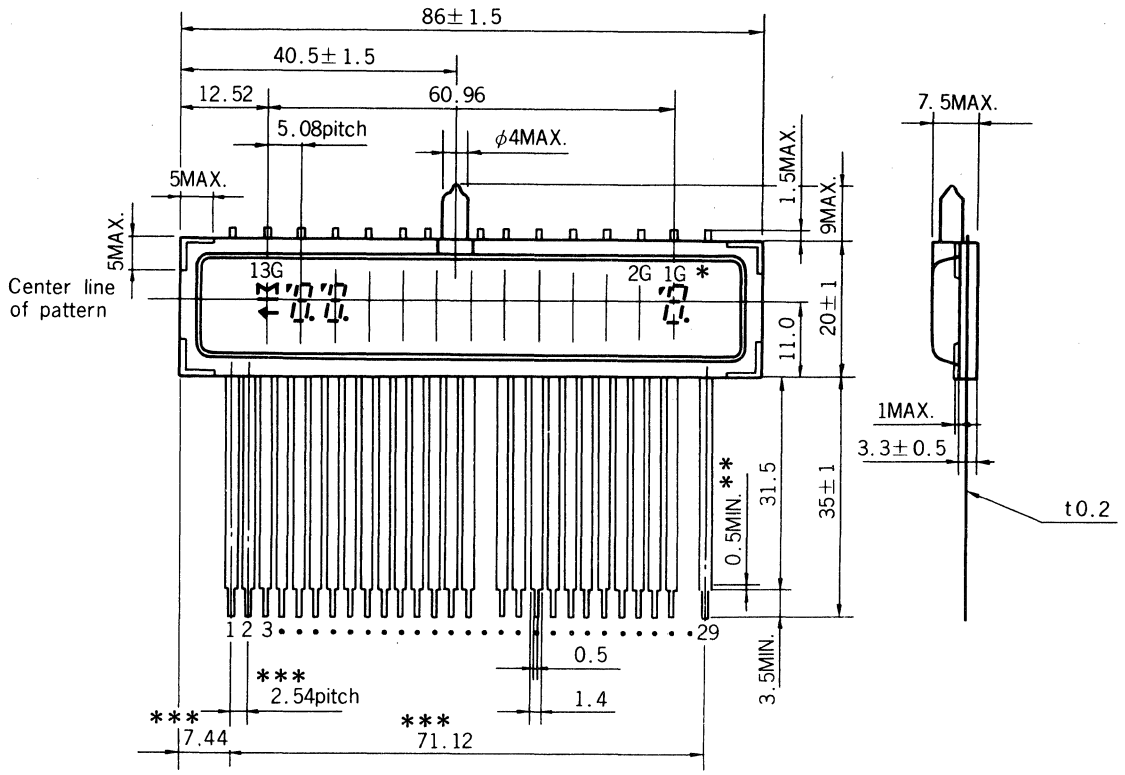

PY1167

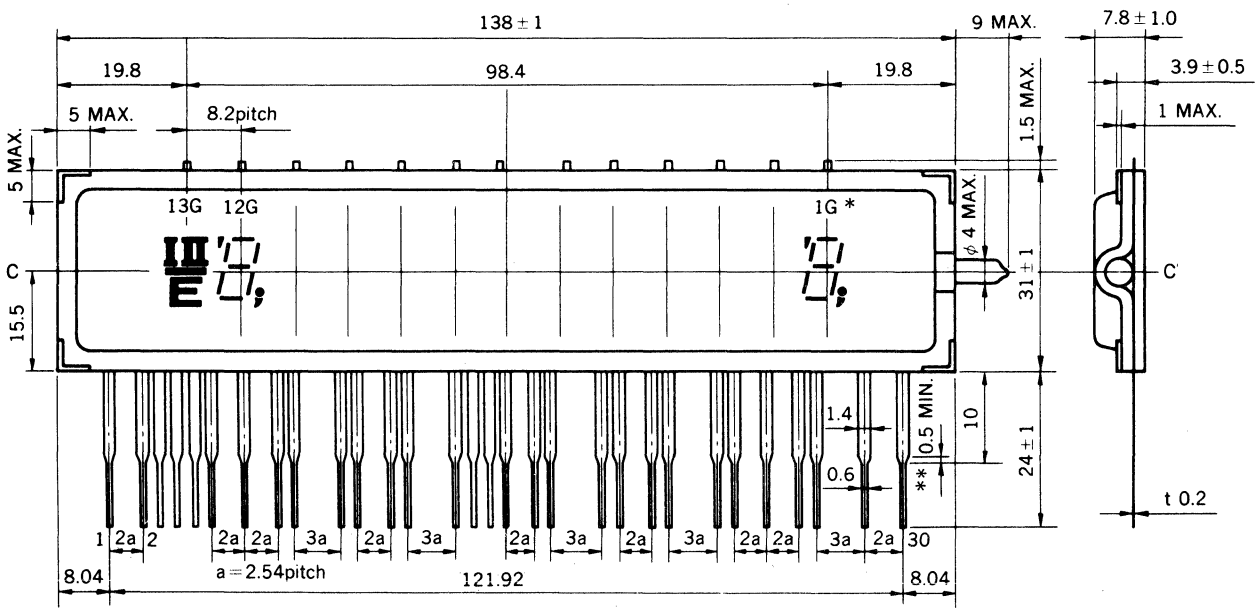

49. OUTLINE DRAWINGS

PY1168

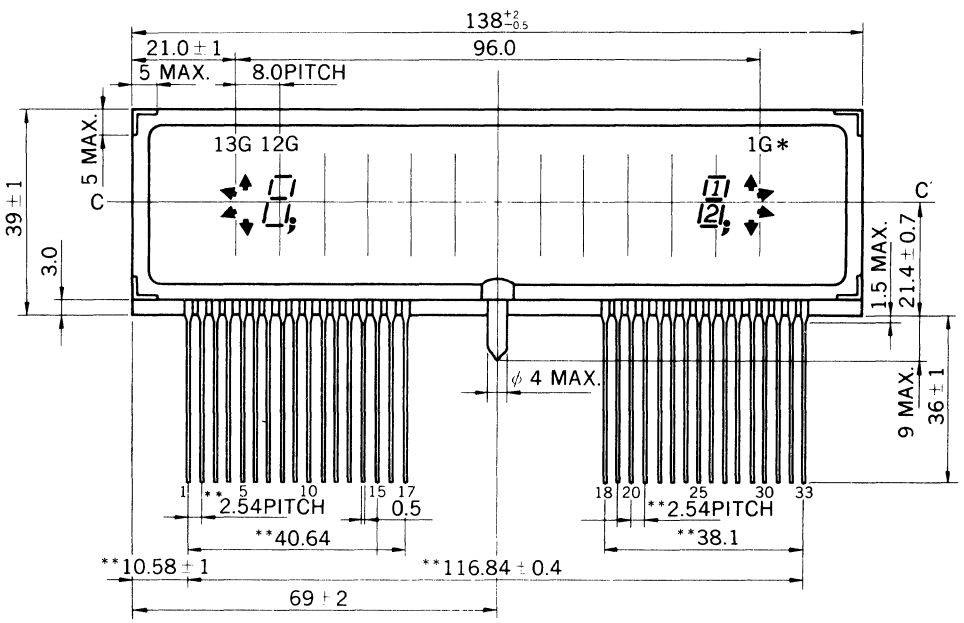

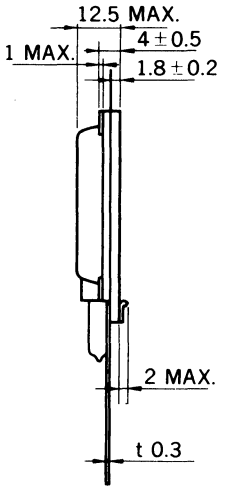

PY1169

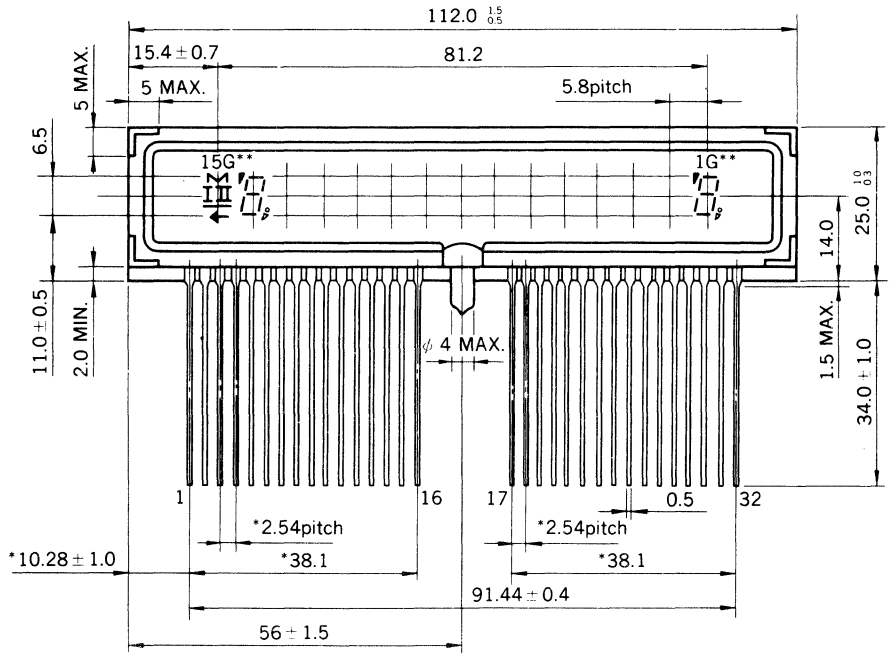

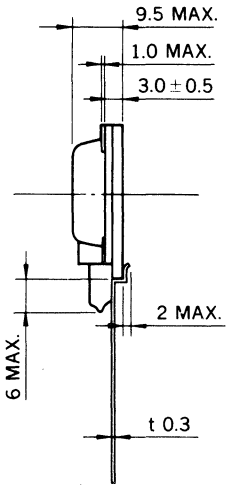

49. OUTLINE DRAWINGS

PY1170

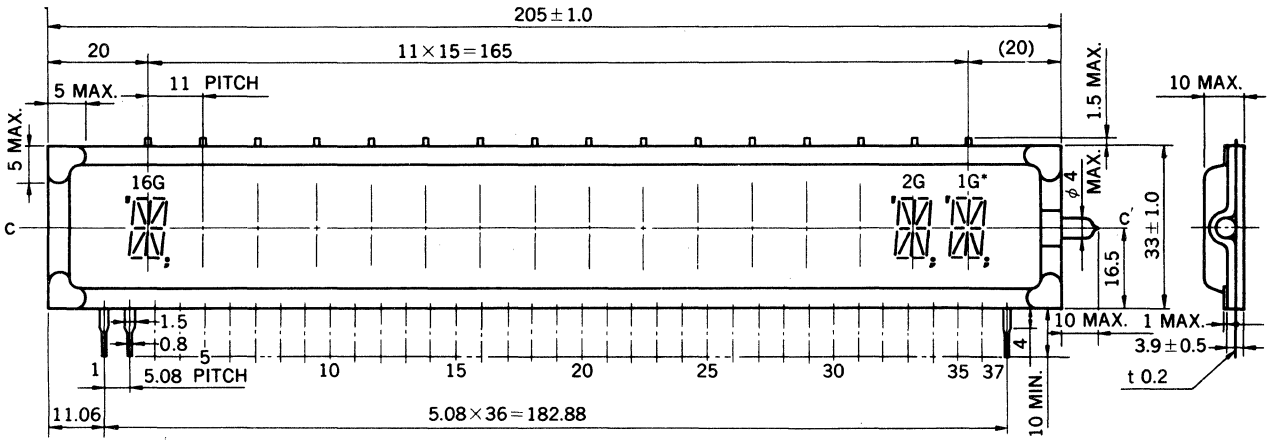

PY1171

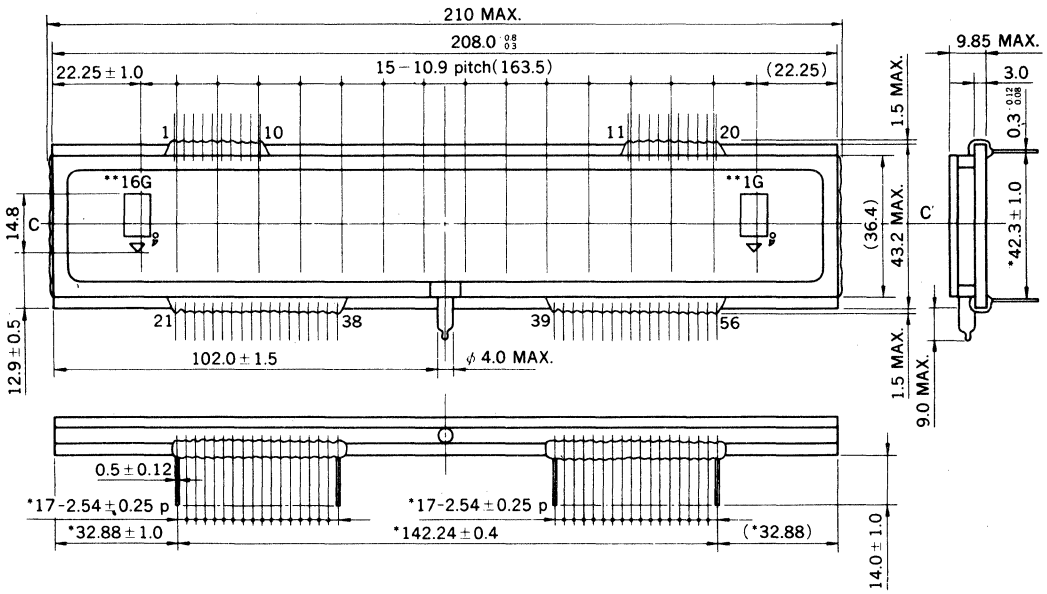

49. OUTLINE DRAWINGS

PY1172

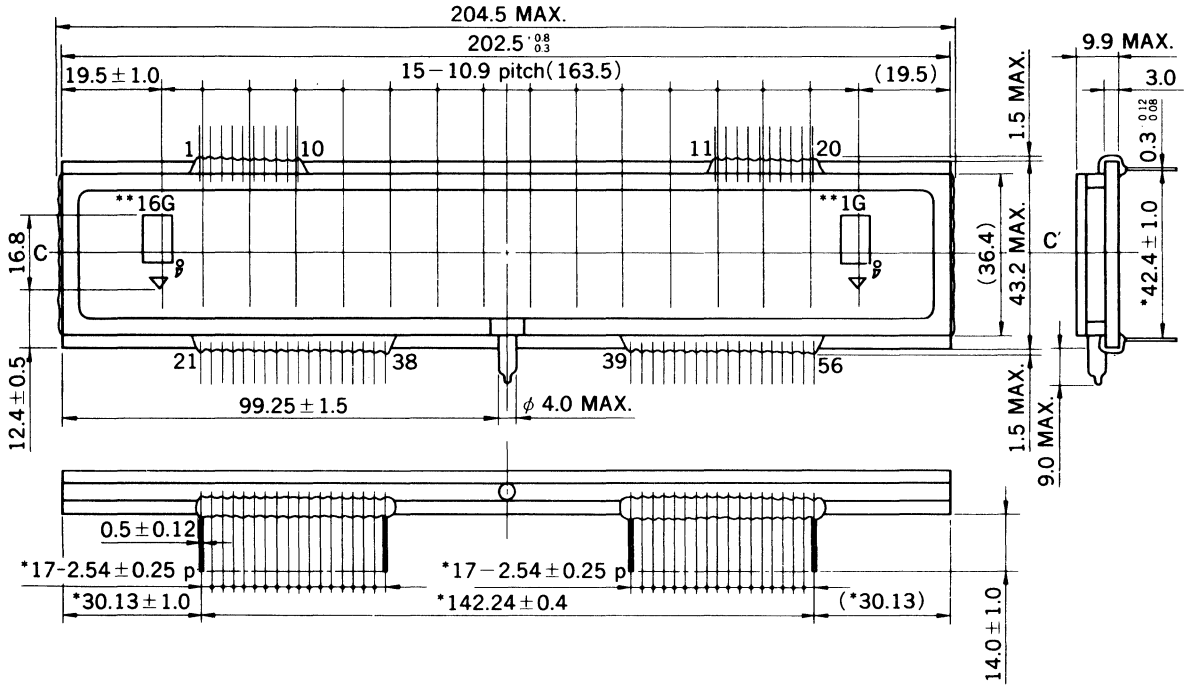

PY1173

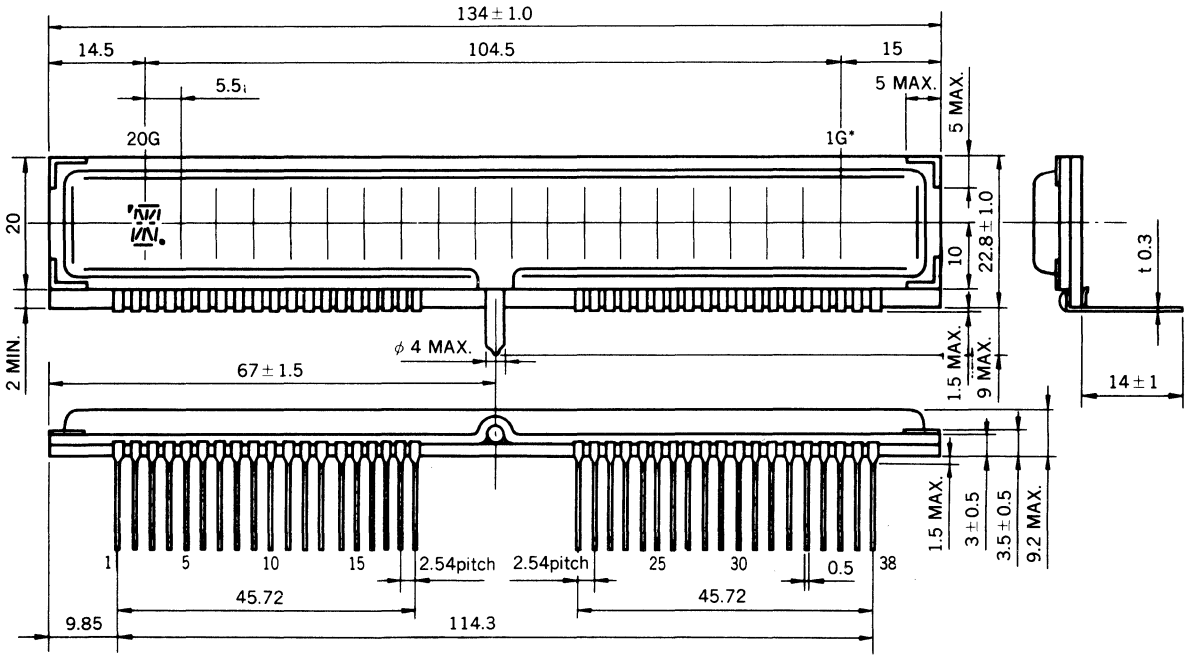

49. OUTLINE DRAWINGS

PY1174

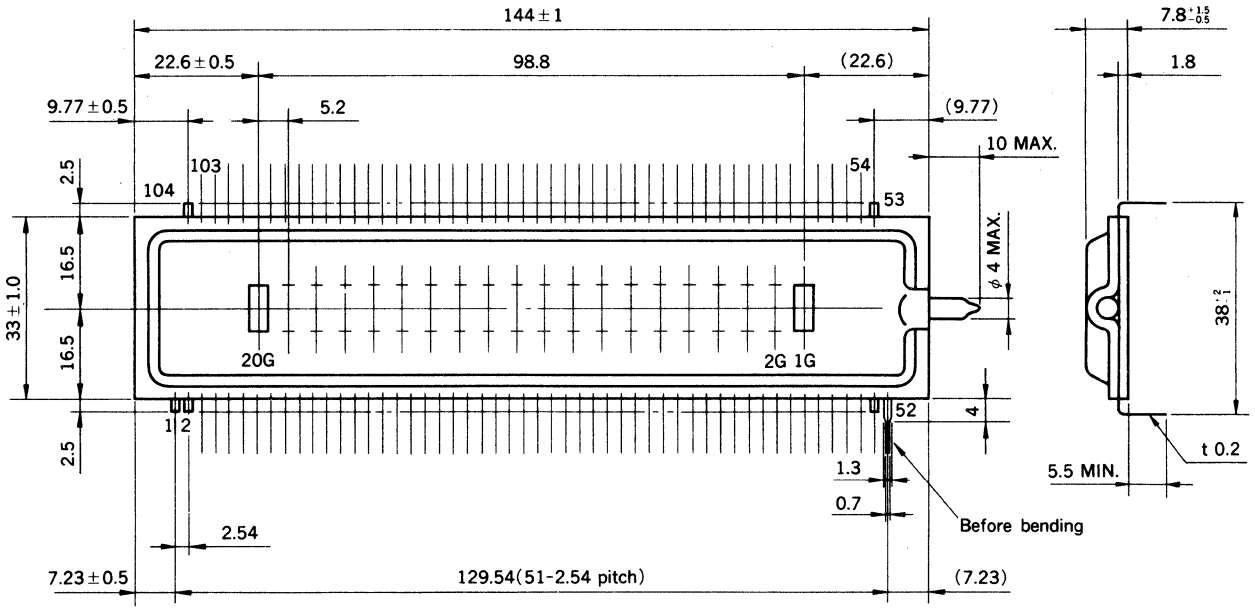

PY1175

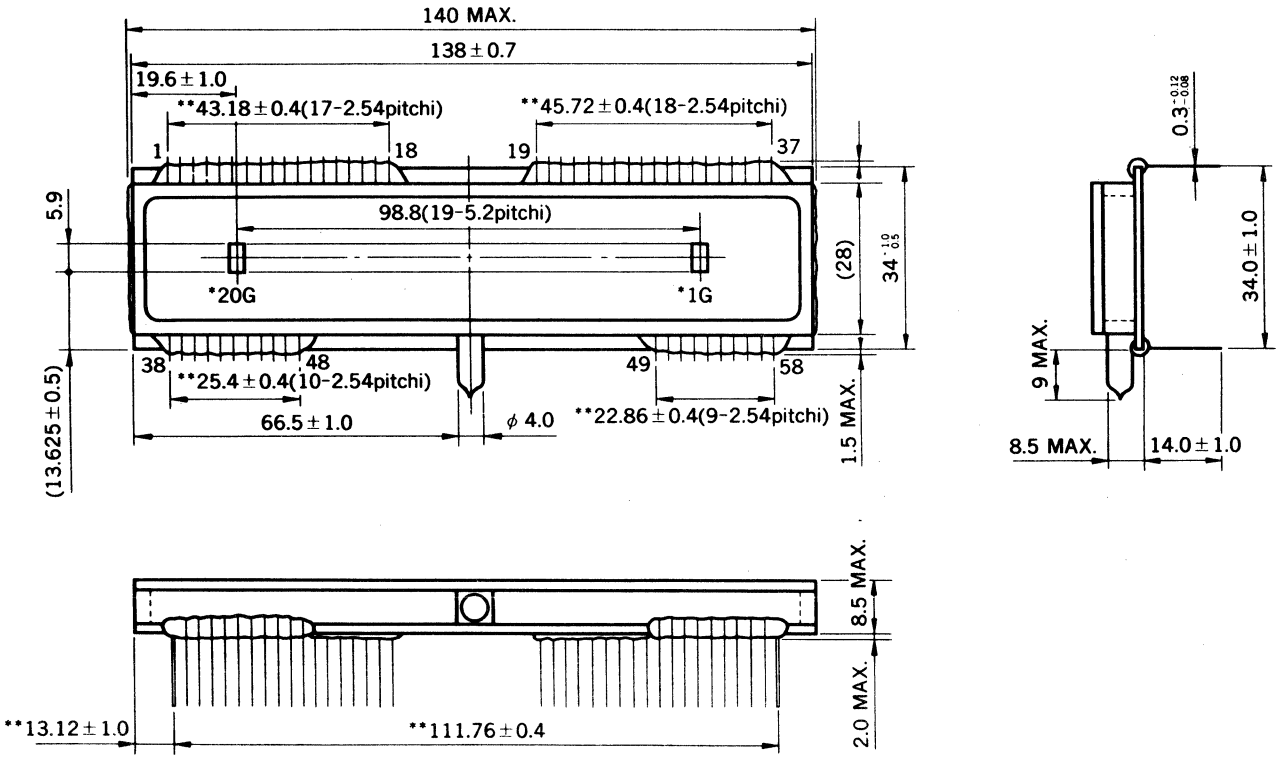

49. OUTLINE DRAWINGS

PY1176

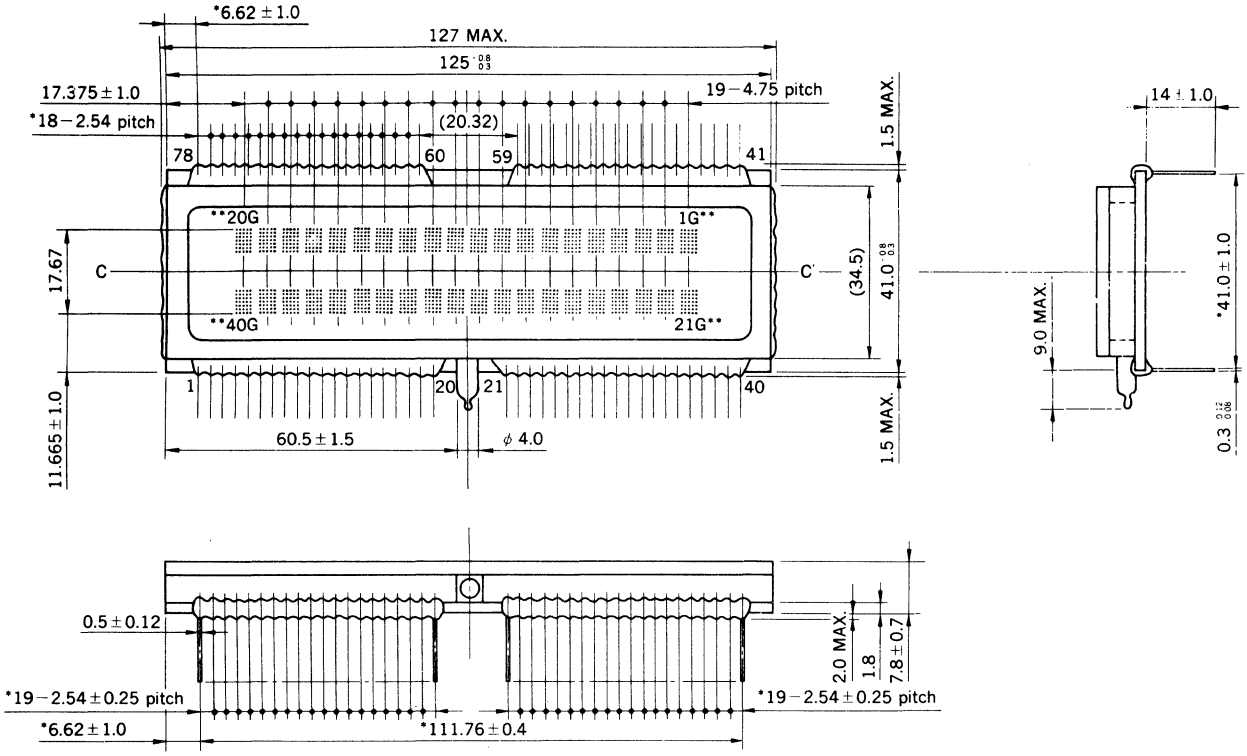

PY1177

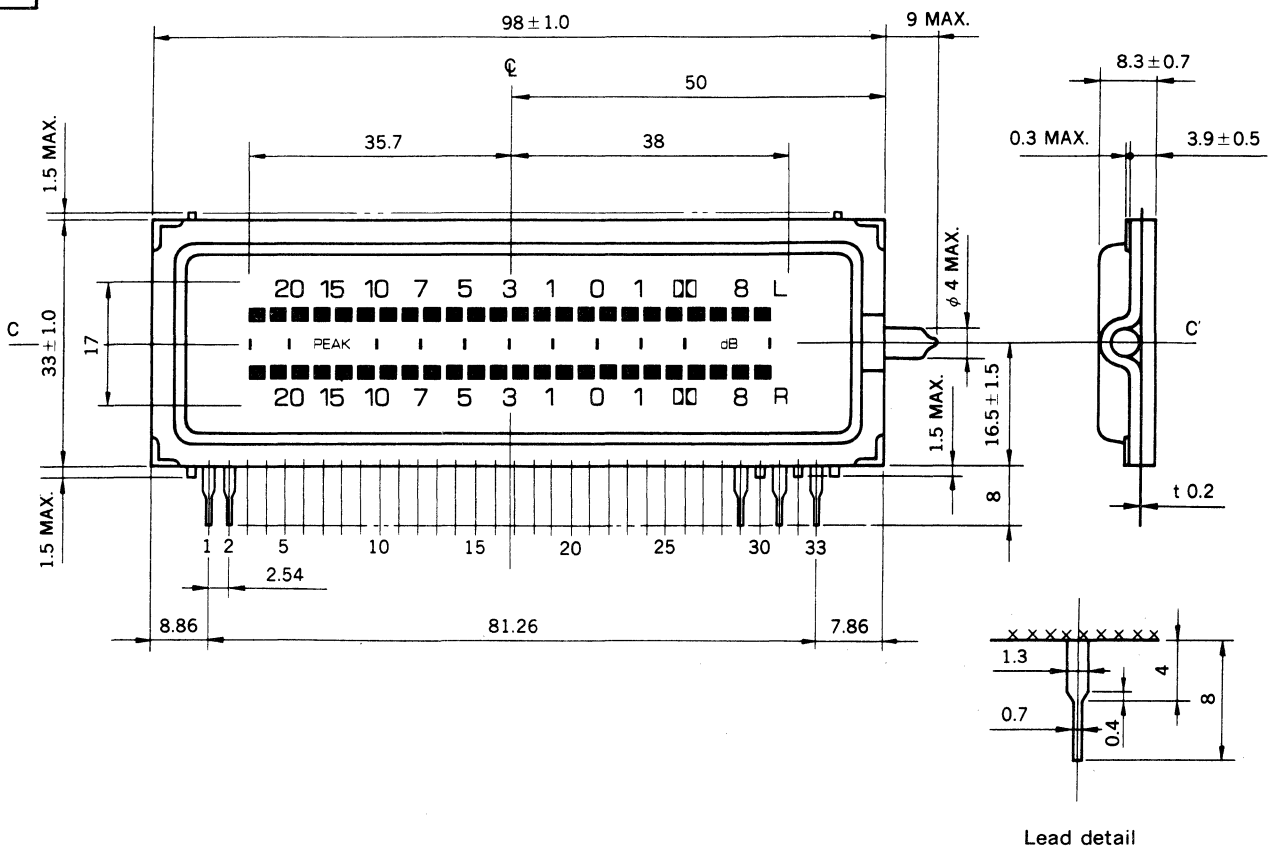

49. OUTLINE DRAWINGS

PY1178

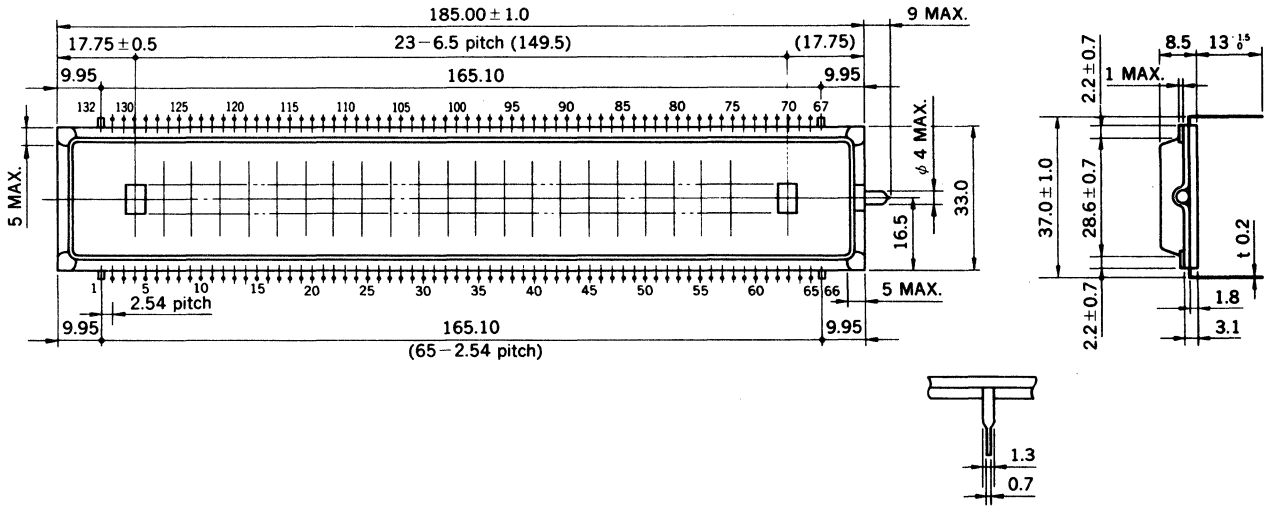

PY1179

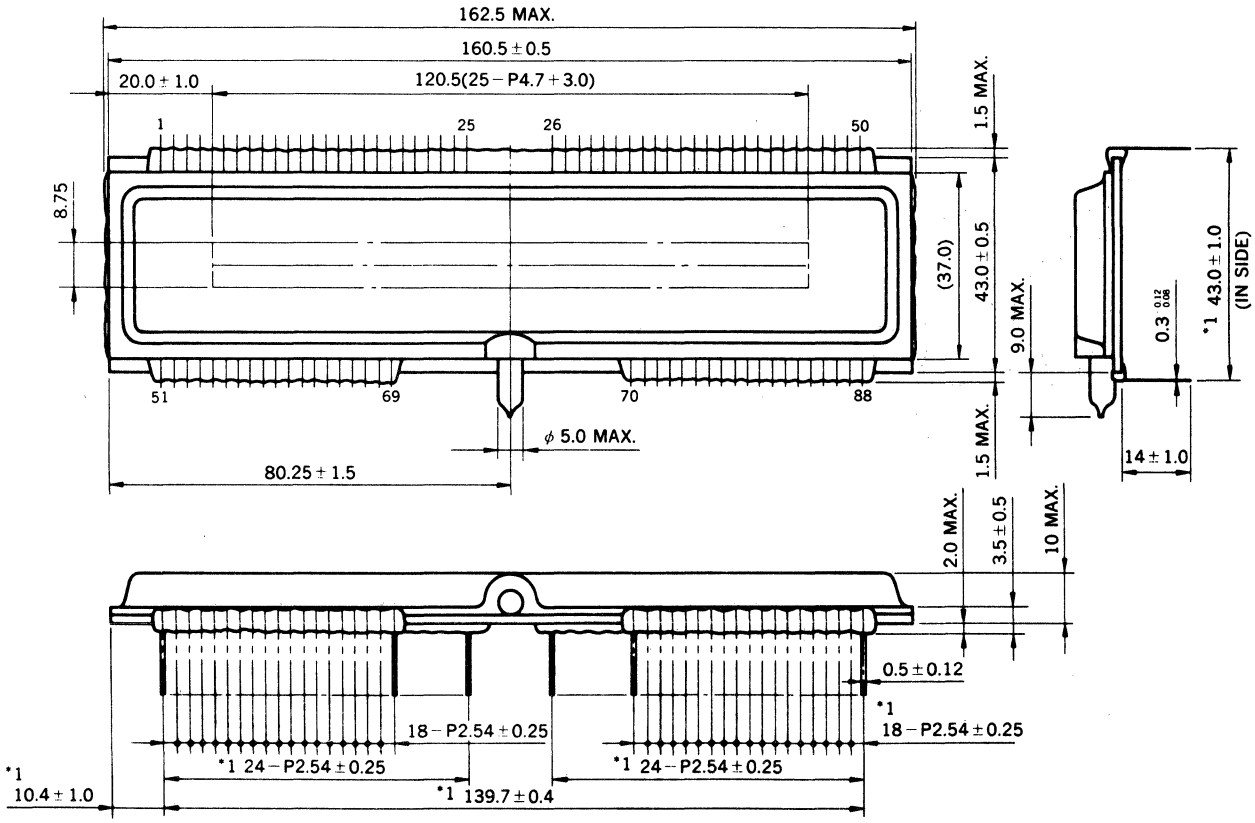

49. OUTLINE DRAWINGS

PY1180

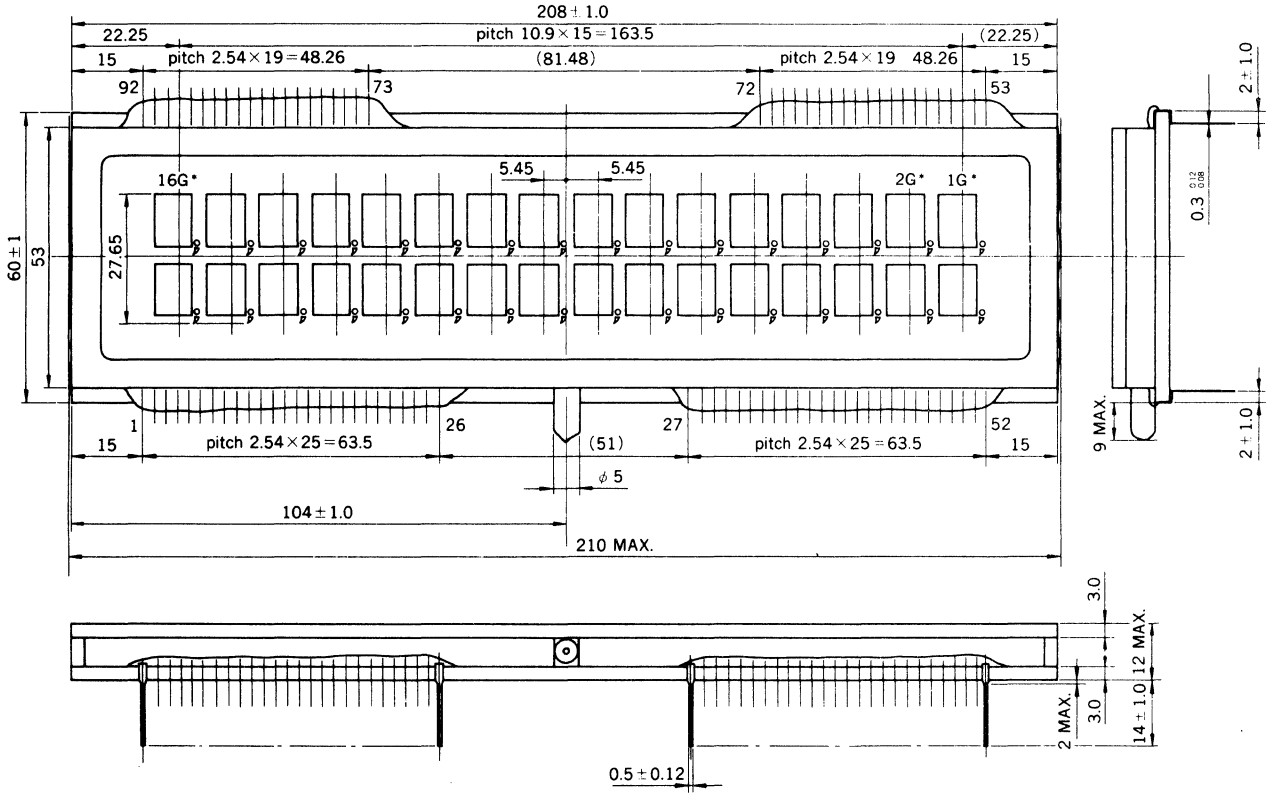

PY1181

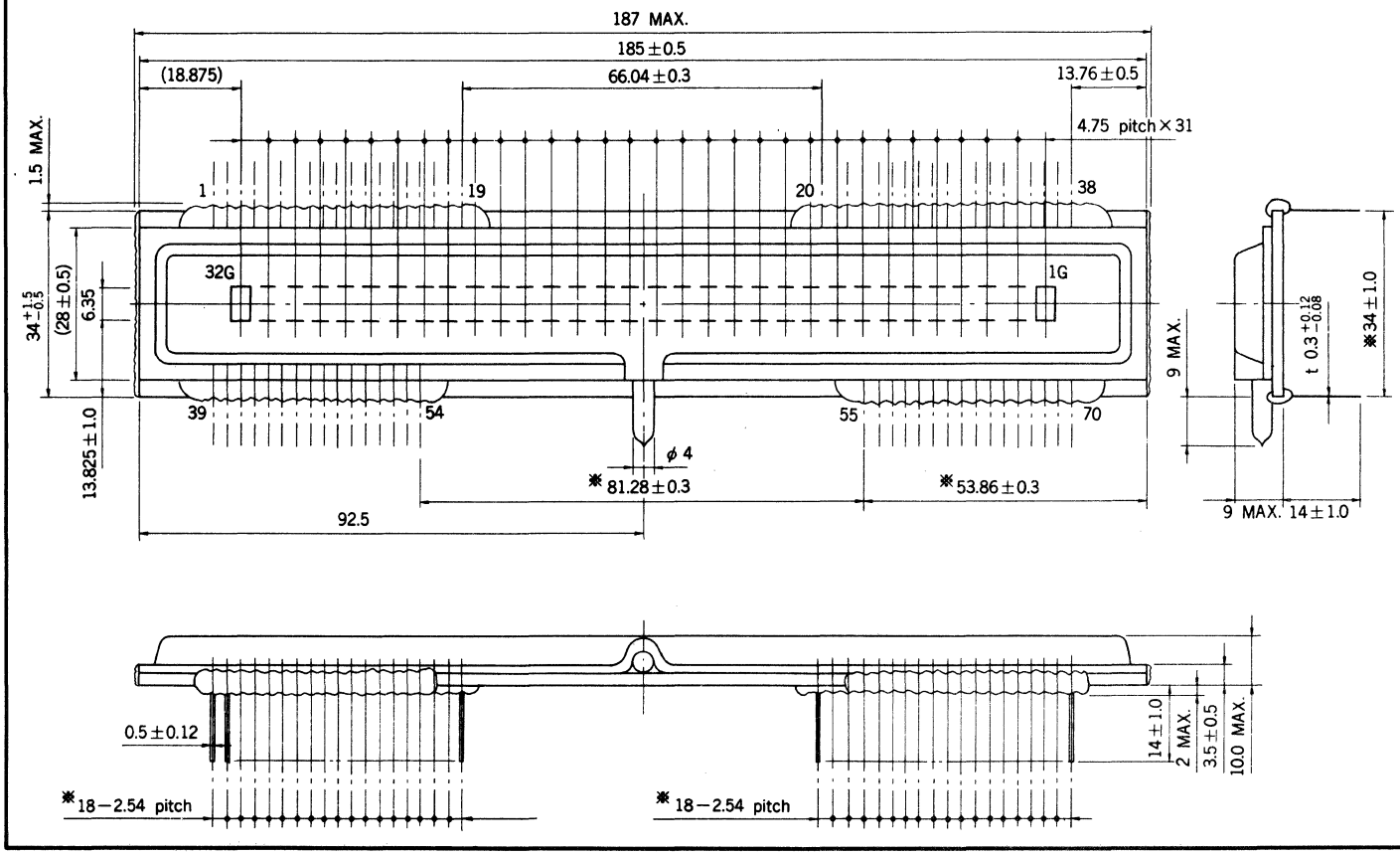

49. OUTLINE DRAWINGS

PY1182

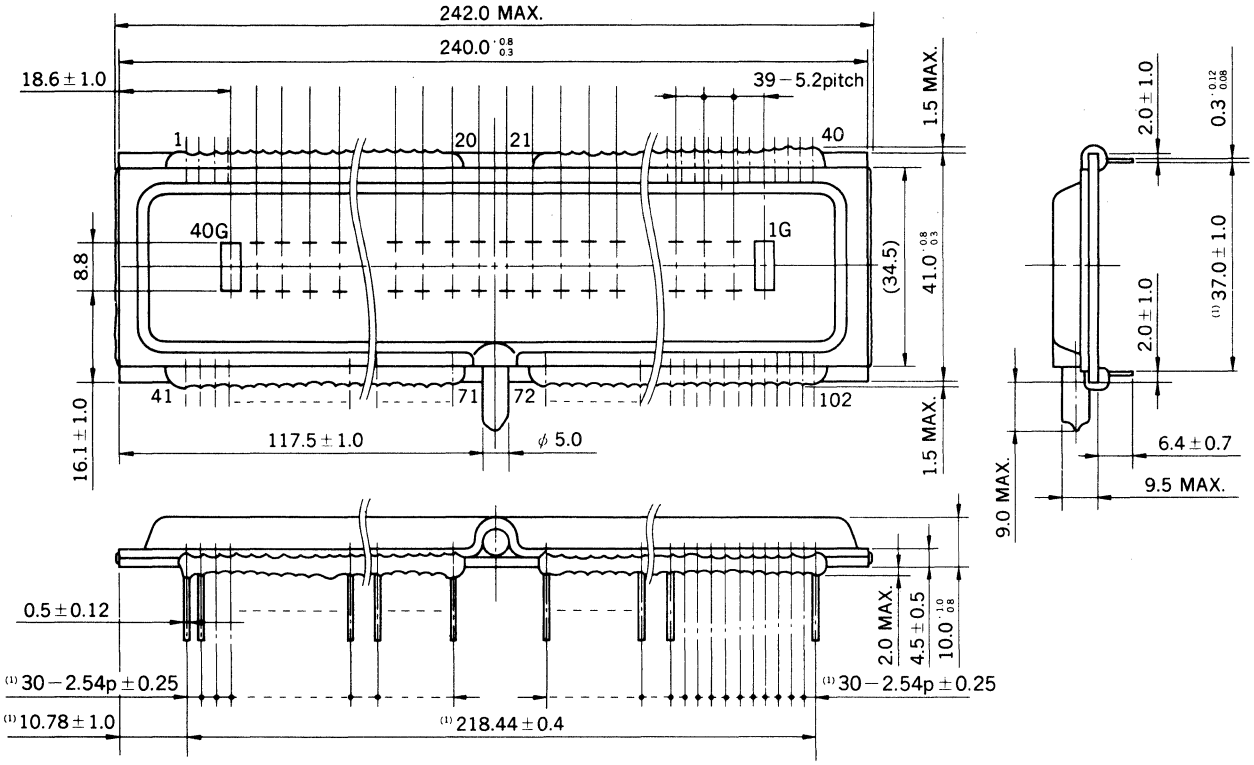

PY1184

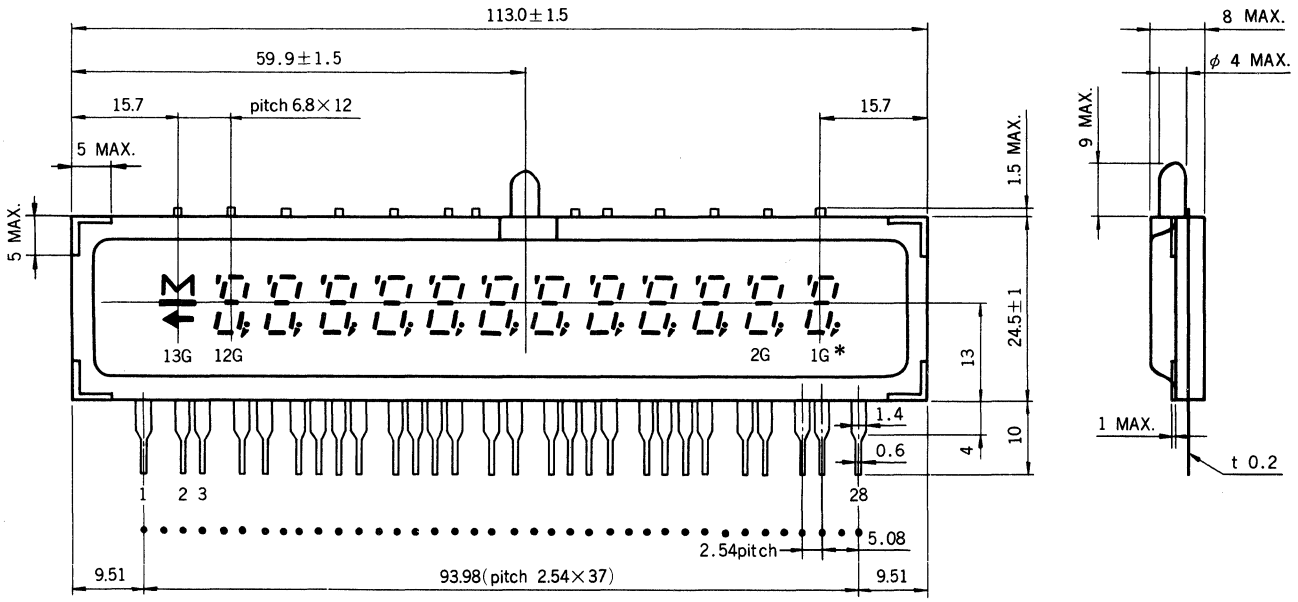

49. OUTLINE DRAWINGS

PY1186

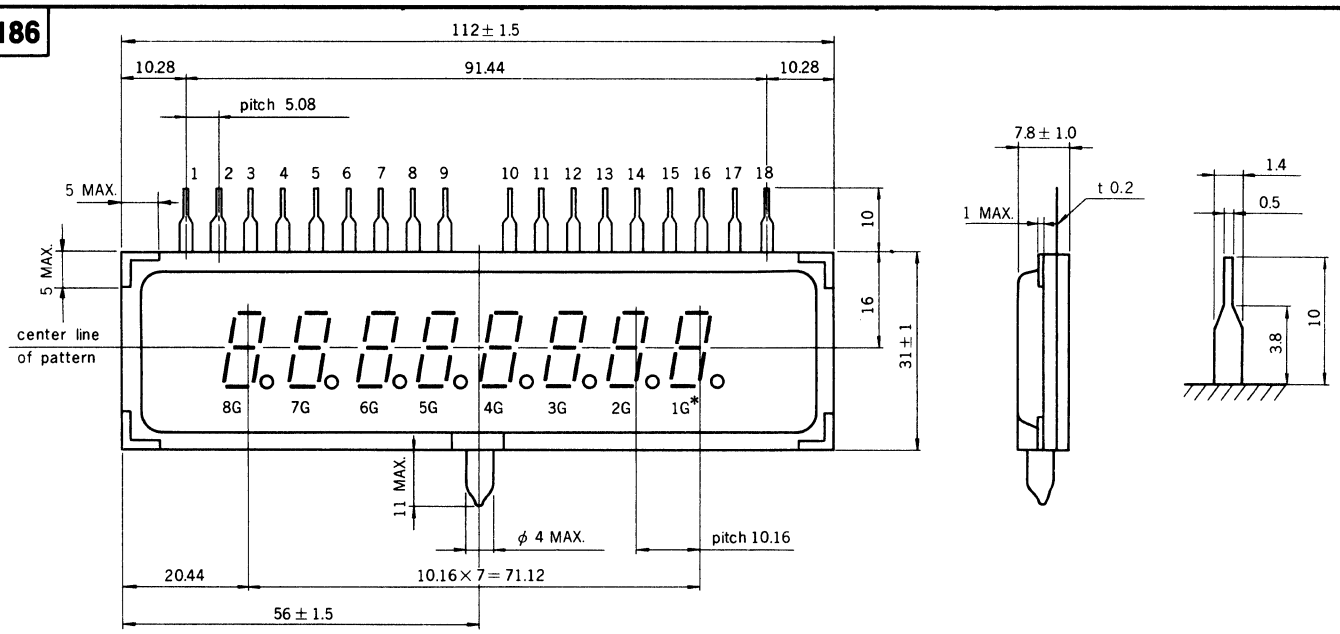

PY1187

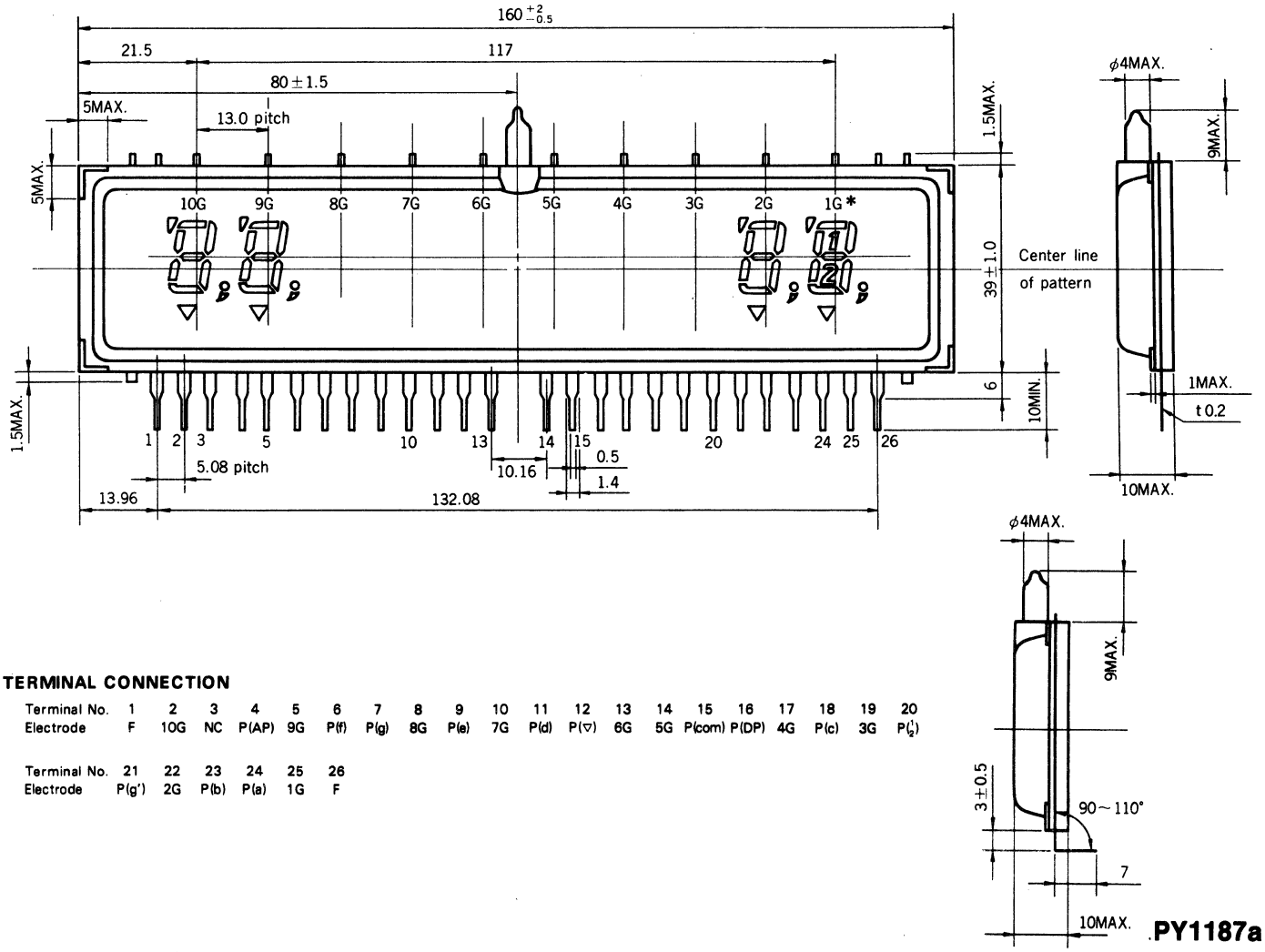

PY1187a

TERMINAL CONNECTION

Terminal No.	1	2	3	4	5	6	7	8	9	10	11	12	13	14	15	16	17	18	19	20
Electrode	F	10G	NC	P(AP)	9G	P(f)	P(g)	8G	P(e)	7G	P(d)	P(▽)	6G	5G	P(com)	P(DP)	4G	P(c)	3G	P($\frac{1}{2}$)

Terminal No.	21	22	23	24	25	26
Electrode	P(g')	2G	P(b)	P(a)	1G	F

49. OUTLINE DRAWINGS

PY1188

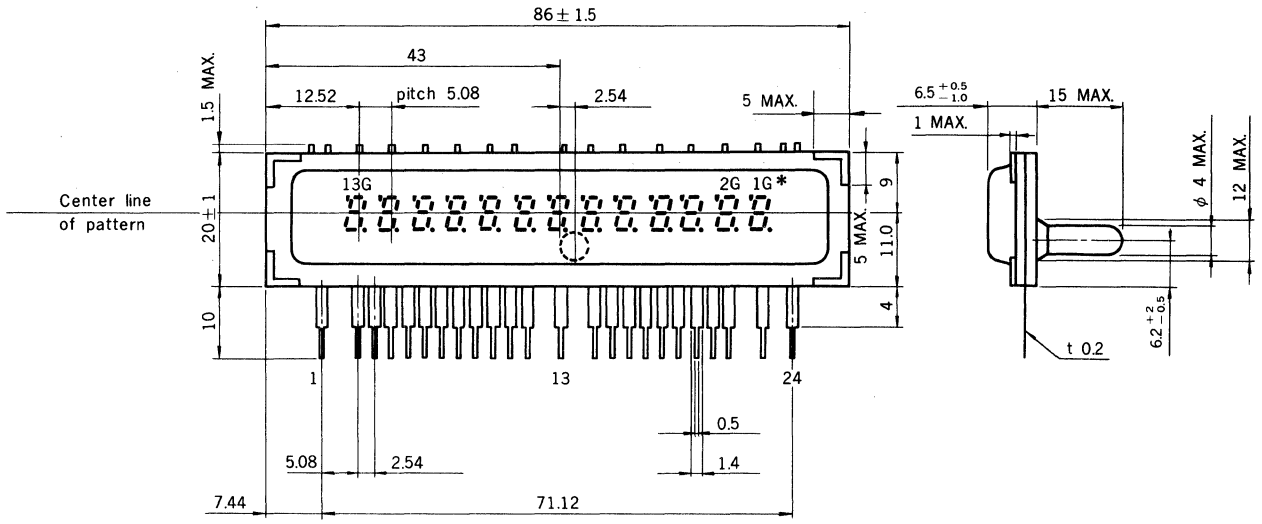

PY1189

Leads are bent 90% to 7.5 mm max. below seating plane.

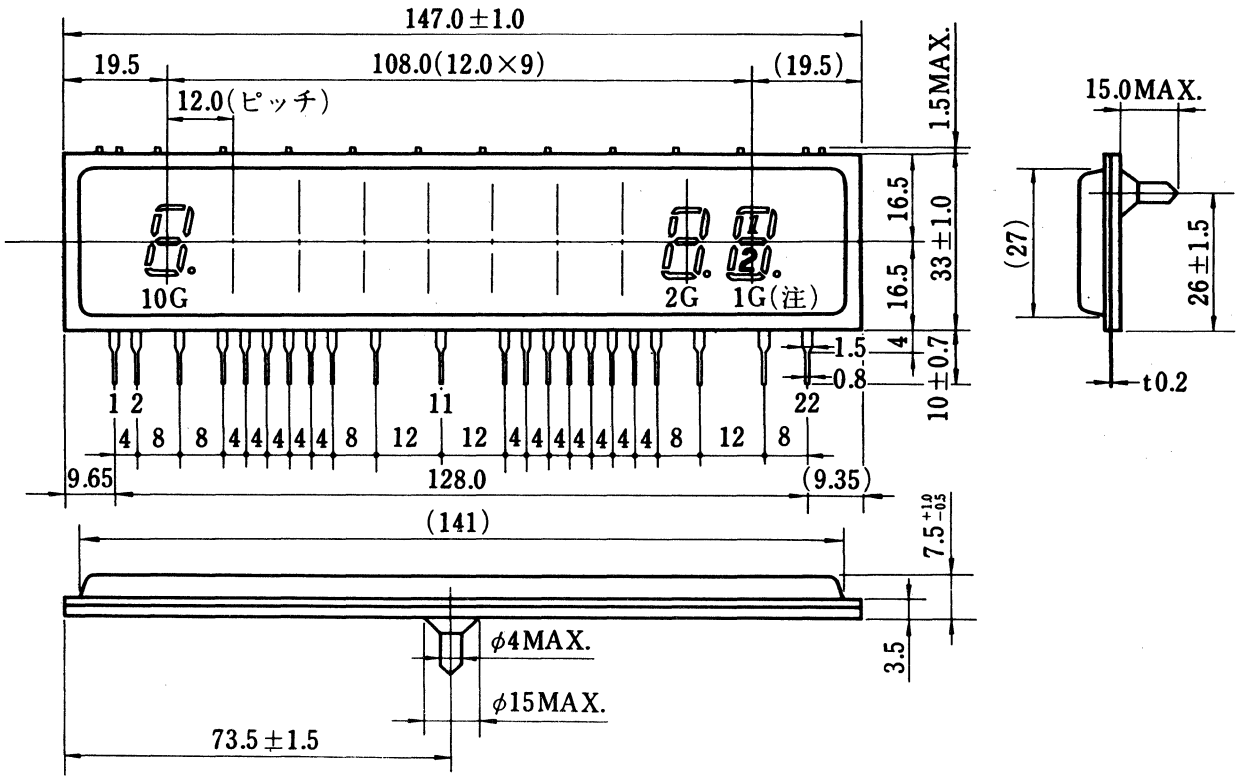

49. OUTLINE DRAWINGS

PY1190

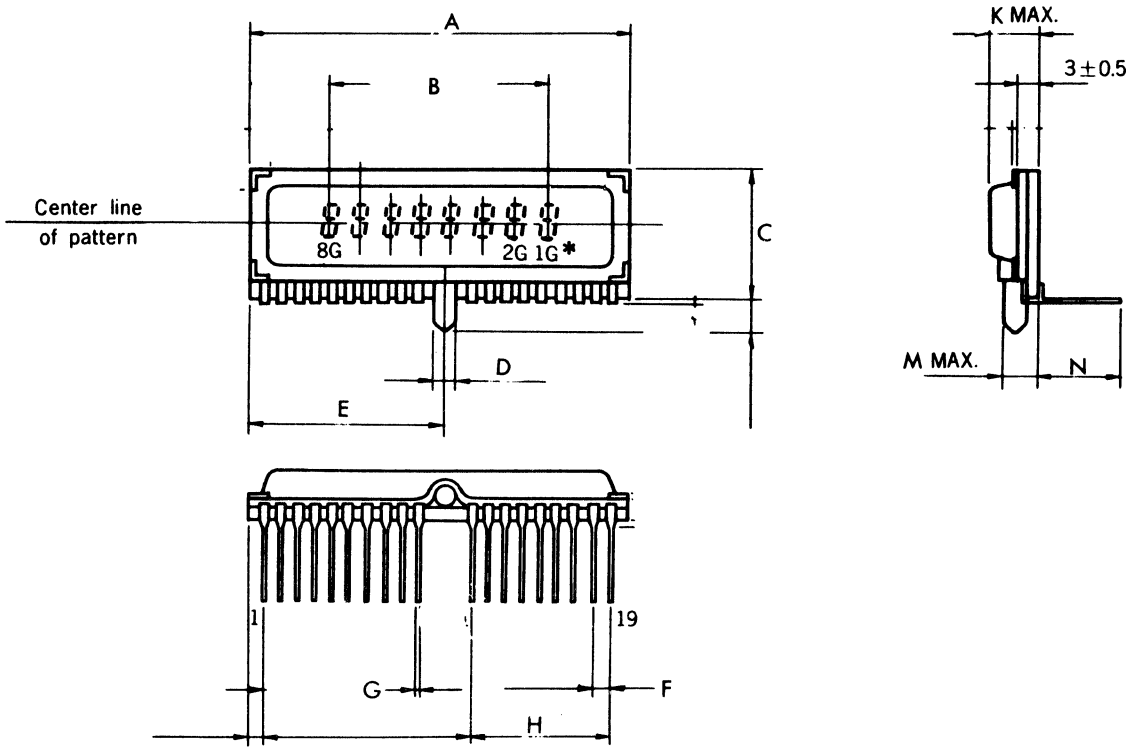

	A	B	C	D	E	F	G	H	J	K	M	N
PY1190	55.3	32.2	19.0	2.4	28.5	2.54	0.5	20.32	2.1	7.2	6.2	7.0
PY1190a	58.0	31.5	17.0	2.4	29.0	2.54	0.5	20.32	4.87	6.5		

PY1191

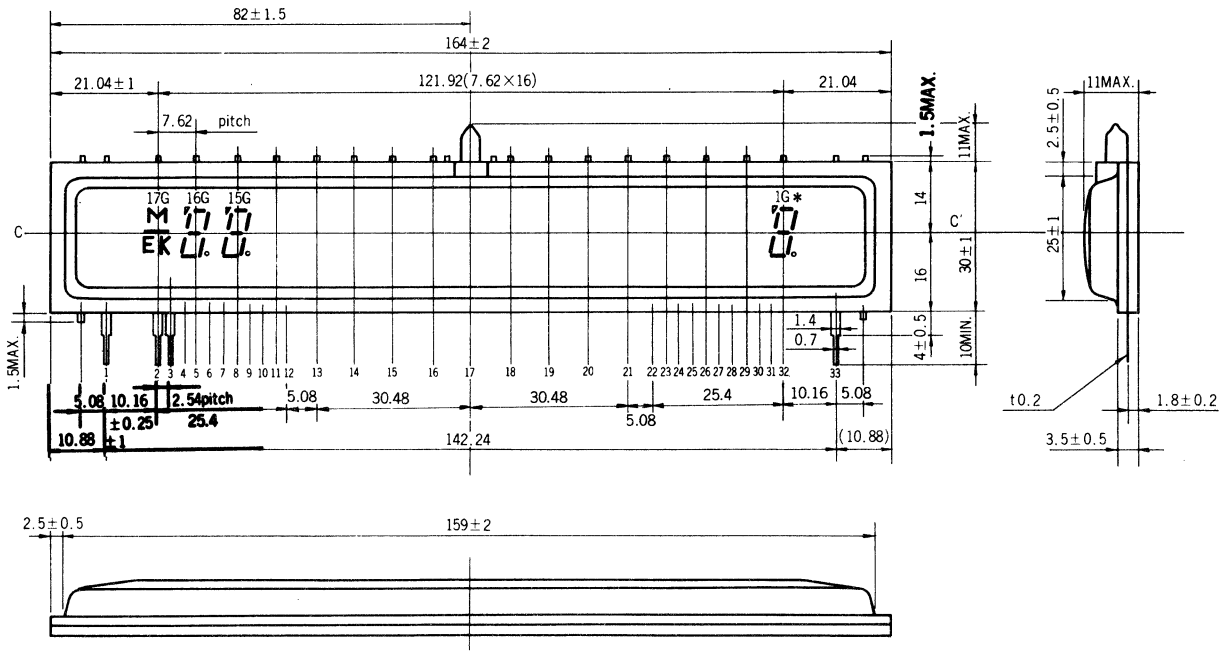

49. OUTLINE DRAWINGS

PY1192

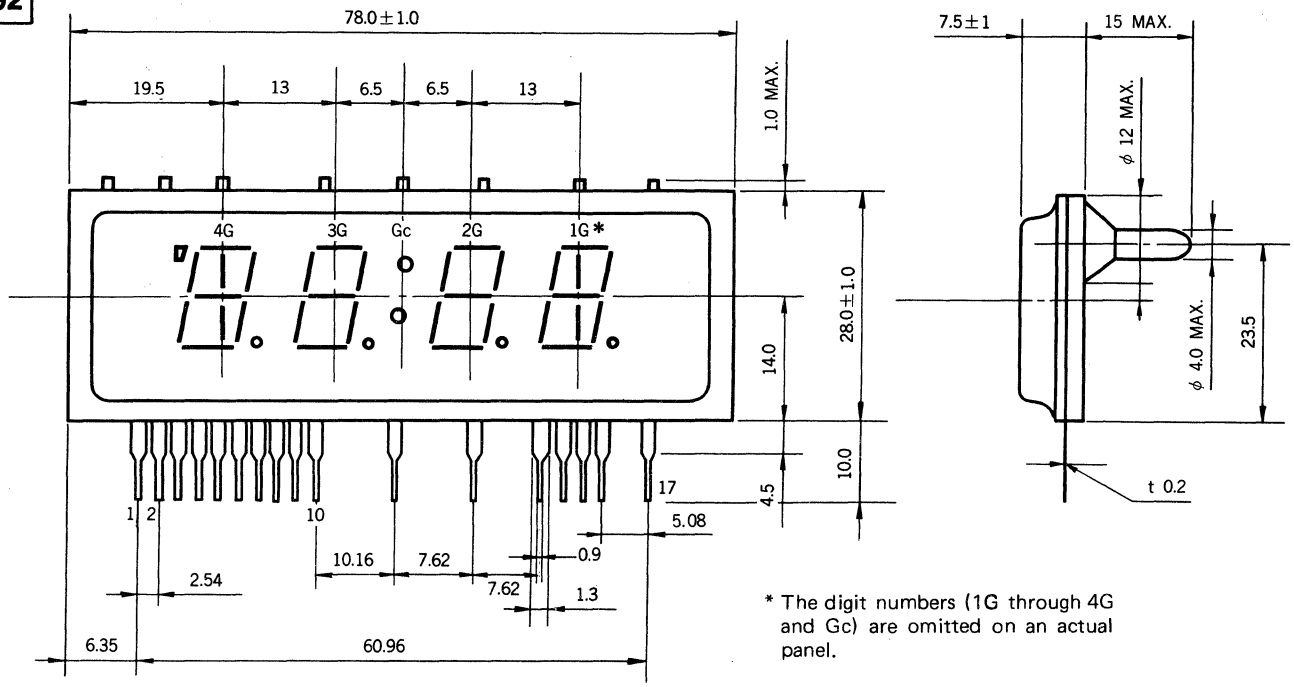

* The digit numbers (1G through 4G and Gc) are omitted on an actual panel.

Terminal Connection

Terminal No.	1	2	3	4	5	6	7	8	9	10
Electrode	F	P(COM)	P(DP)	P(f)	P(g)	4G	P(e)	P(d)	P(c)	3G
Terminal No.	11	12	13	14	15	16	17			
Electrode	Gc	2G	P (col)	P(b)	1G	P(a)	F			

PY1193

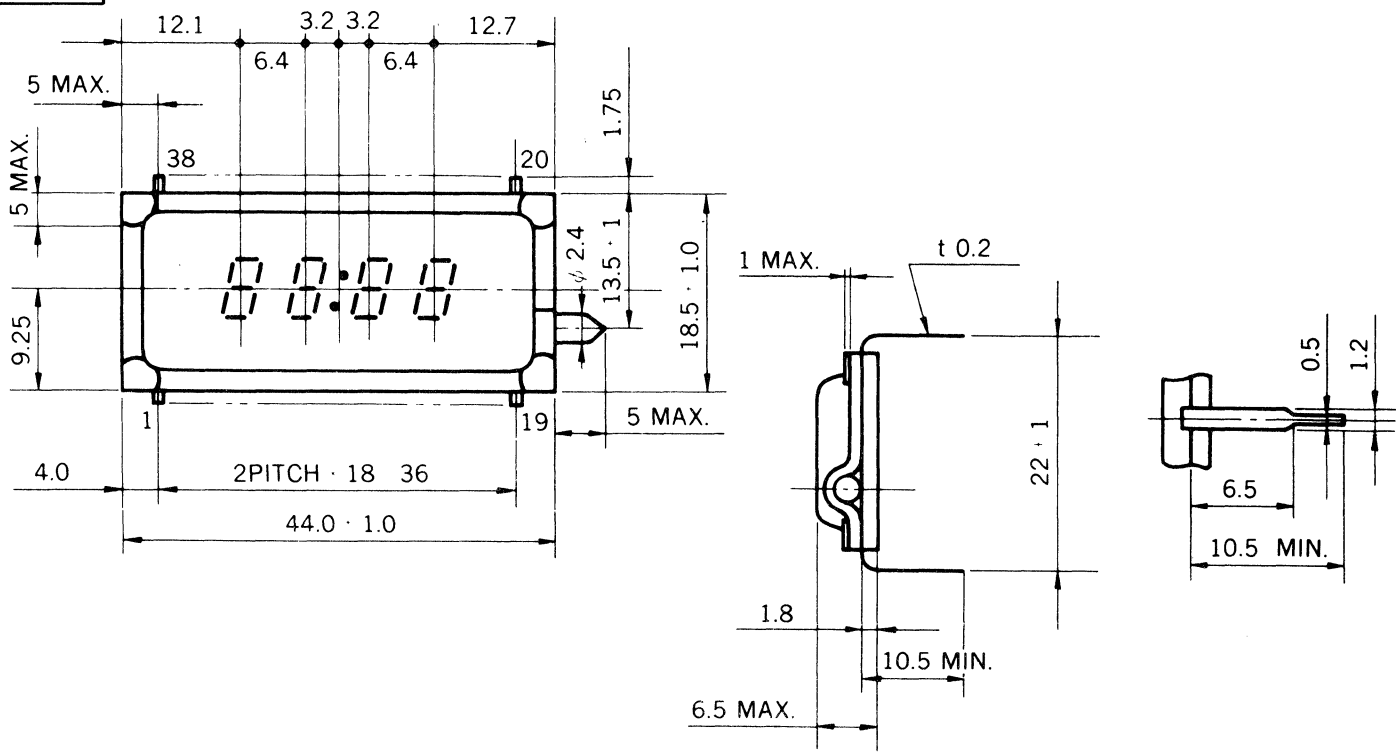

49. OUTLINE DRAWINGS

PY1199

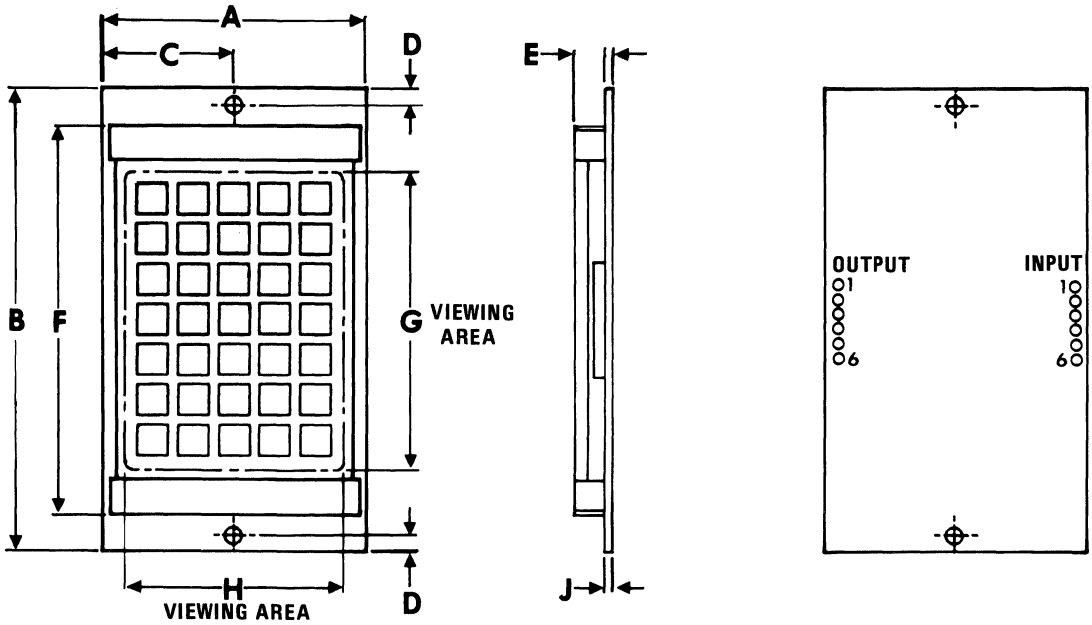

REF	MILLIMETRES	INCHES
A	54.61	2.15
B	100.33	3.95
C	27.3	1.075

REF	MILLIMETRES	INCHES
D	3.8	0.150
E	8.5 max	0.335 max
F	84.0 max	3 307 max

REF	MILLIMETRES	INCHES
G	65.4	2.575
H	46.8	1.843
J	1.6	0.063

PY1200

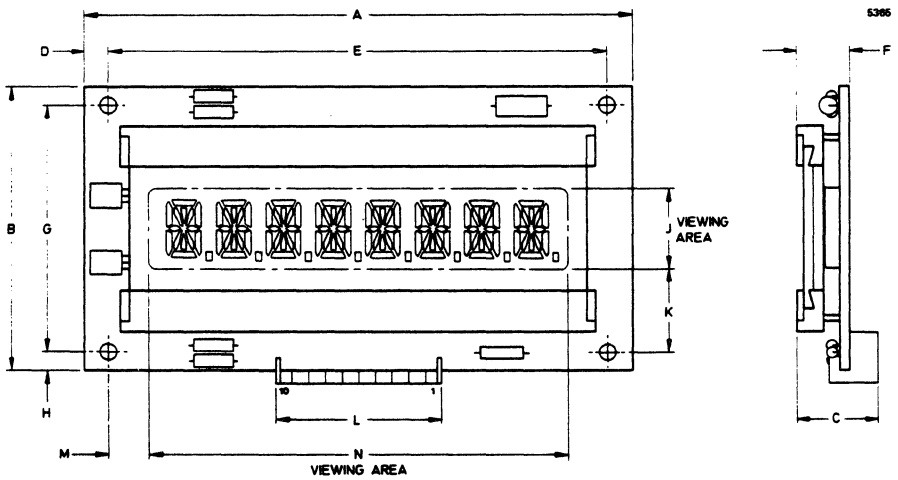

Ref	Millimetres	Inches
A	84.0	3.307
B	44.0	1.732
C	13.0 max	0.512 max
D	3.81	0.150
E	76.2	3.000

Ref	Millimetres	Inches
F	8.5 max	0.335 max
G	38.1	1.500
H	3.18	0.125
J	12.5	0.492
K	12.8	0.504

Ref	Millimetres	Inches
L	25.4	1.000
M	6.1	0.240
N	64.0	2.520

49. OUTLINE DRAWINGS

PY1201

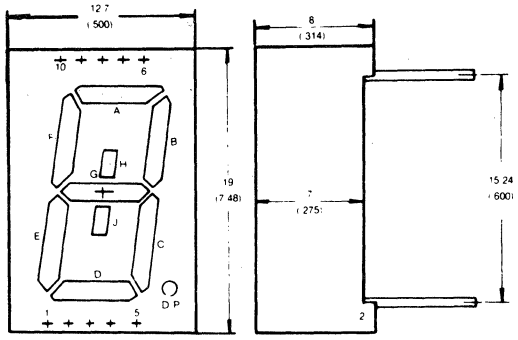

PY1201a lacks segments H and J

PY1202

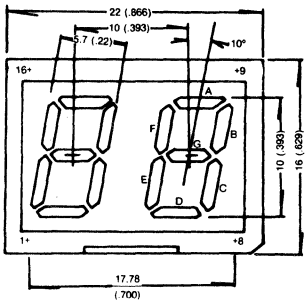

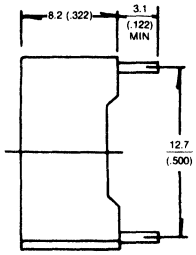

PY1218

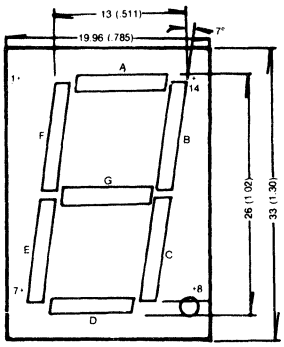

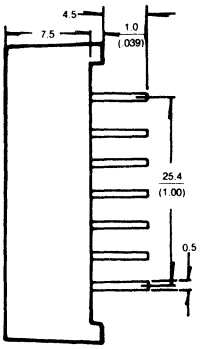

PY1218

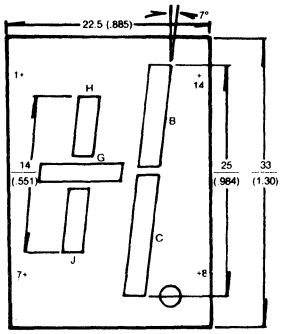

PY1218a

PY1203

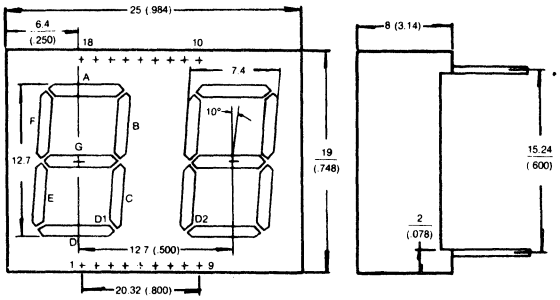

PY1203a

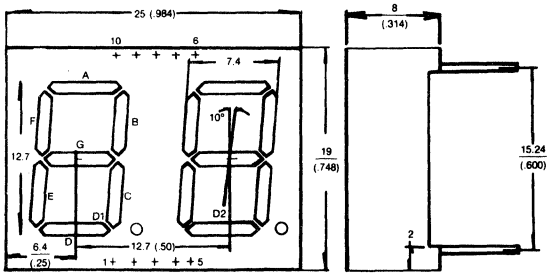

PY1203b

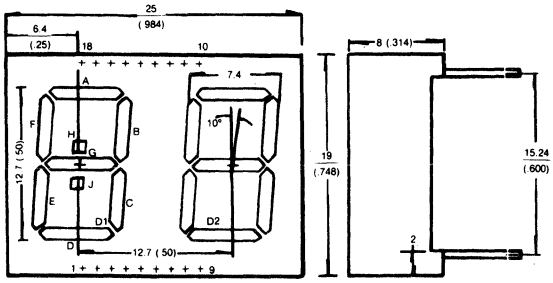

PY1203c

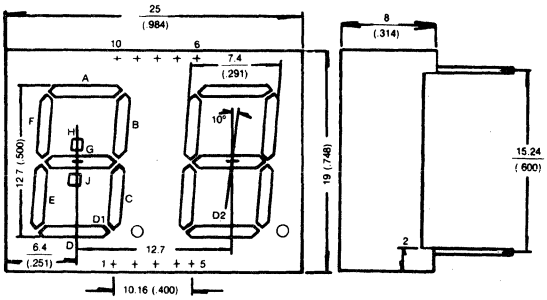

PY1203d

49. OUTLINE DRAWINGS

PY1204

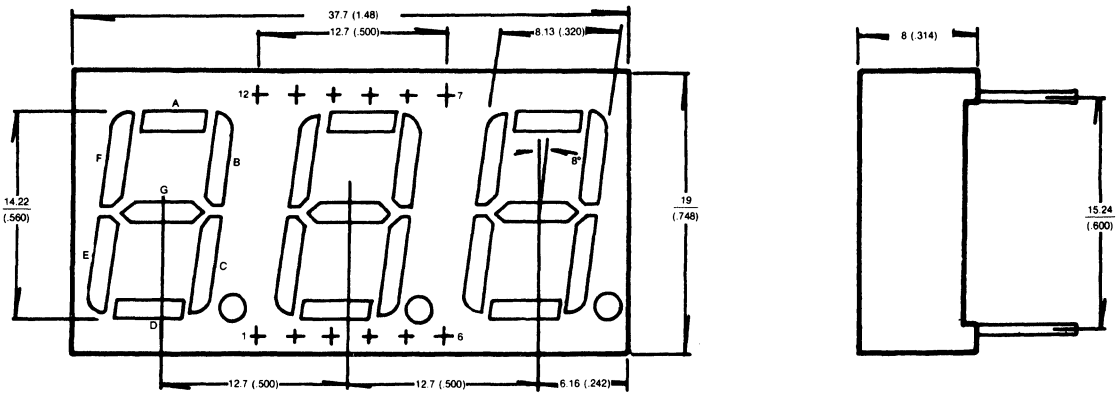

PY1205

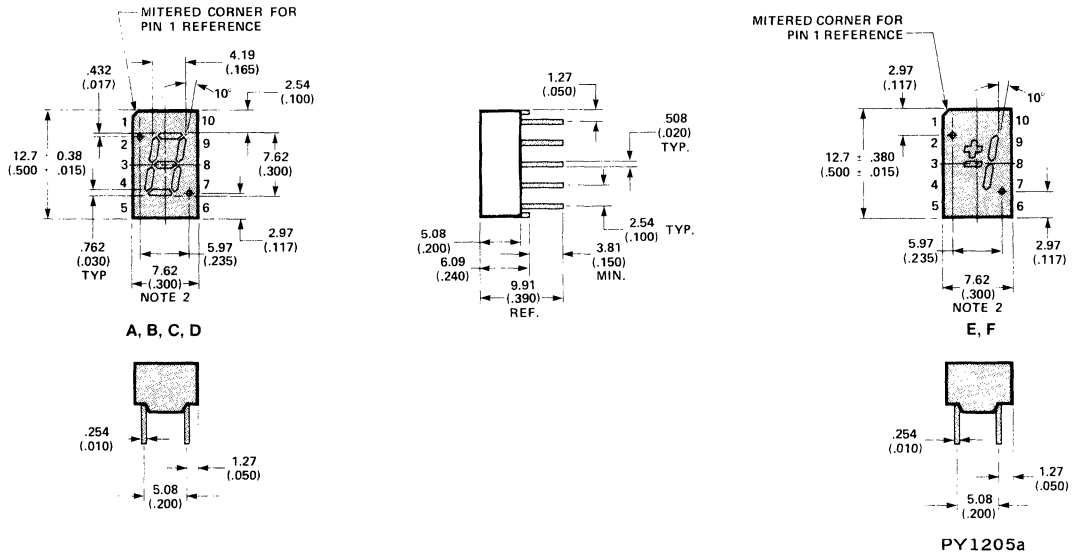

PY1205a

PY1206

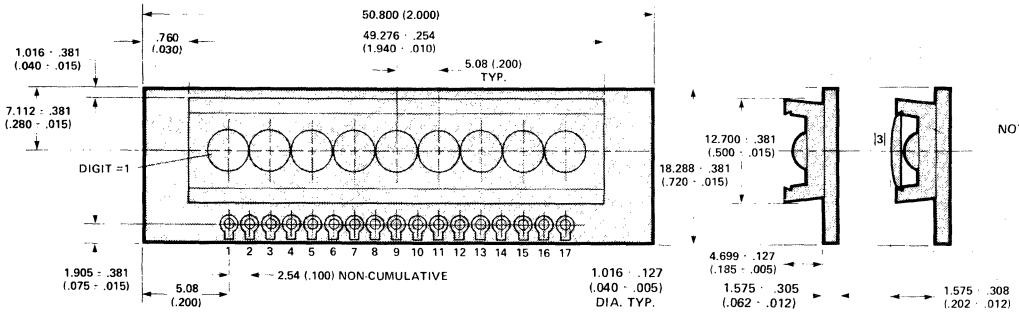

NOTES:
1. Dimensions in millimeters and (inches).
2. Logo and part number are on back of package.
3. Secondary 1.25X magnifier that slides into primary lens and increases character height to 3.33 (.131) available as special product.
4. Tolerances: ±.881 (.015)

49. OUTLINE DRAWINGS

PY1207

PHYSICAL DIMENSION

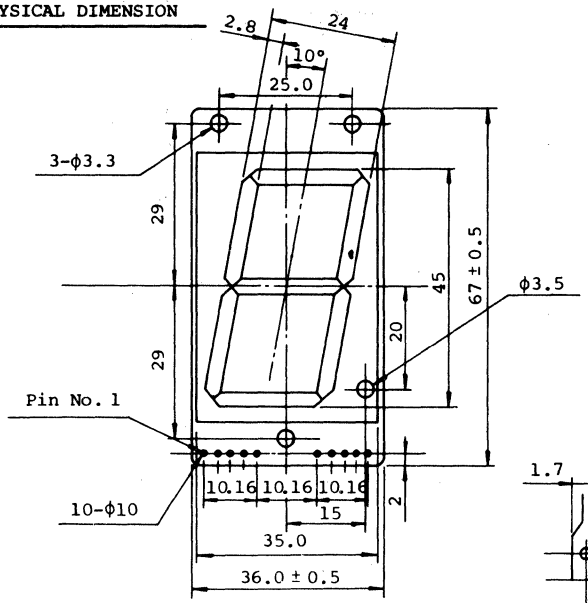

Unit in mm
Tolerance is ±0.25
Unless otherwise noted

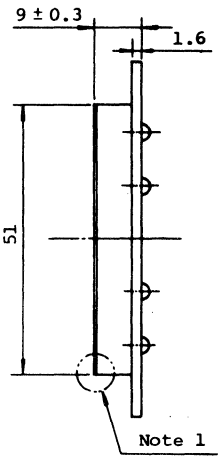

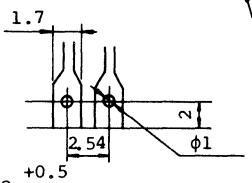

Note 1. Film slip out tolerance $^{+0.5}_{-0}$

Detail terminal

PIN CONNECTION

Pin No.	CONNECTION
1	N・C
2	Anode E
3	Anode F
4	Anode G
5	Anode D
6	Anode A
7	Anode B
8	Anode C
9	Common cathod
10	Dot anode

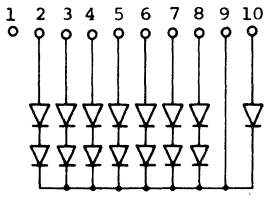

PY1208

Unit in mm
Tolerance is ±0.5
Unless otherwise noted

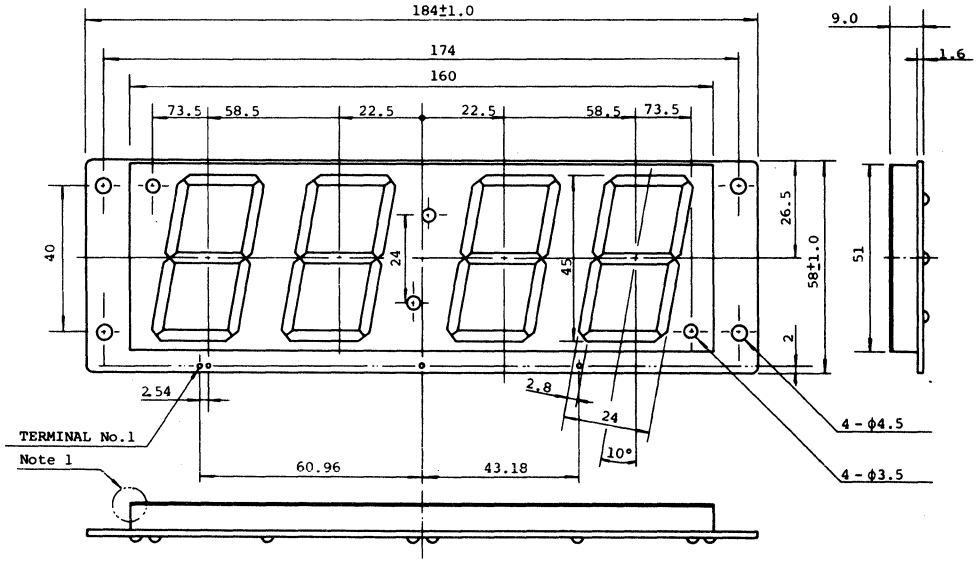

Note 1 : Film slip out tolerance $^{+1.0}_{-0}$

49. OUTLINE DRAWINGS

PY1209

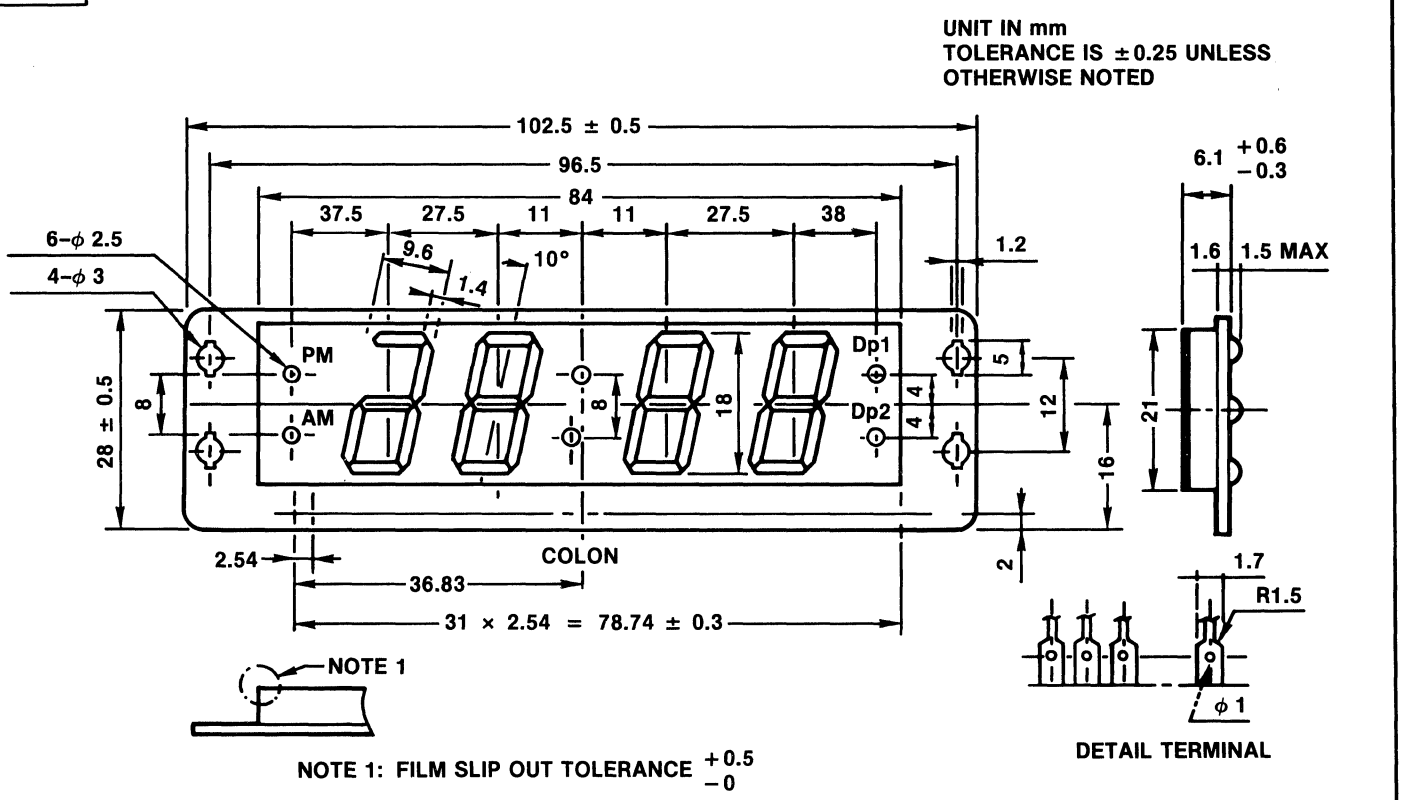

PY1210

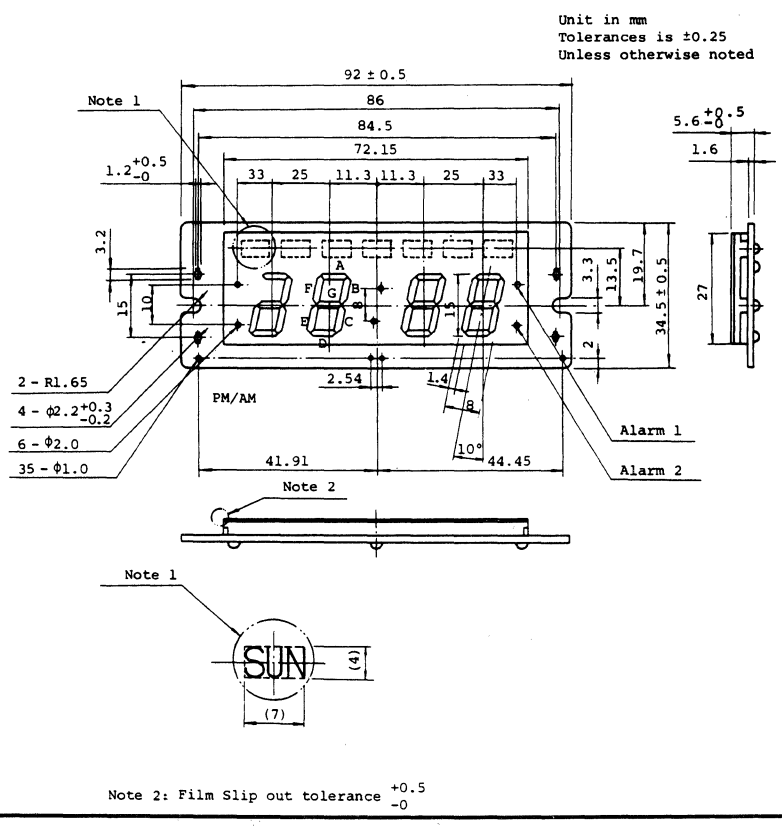

PY1212

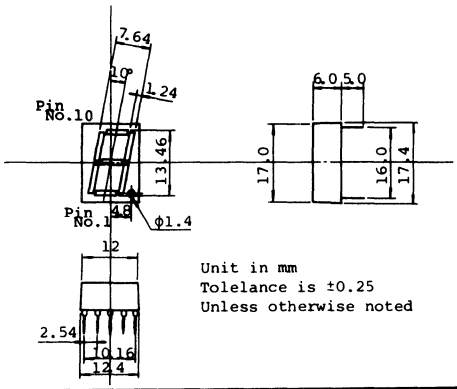

PY1213

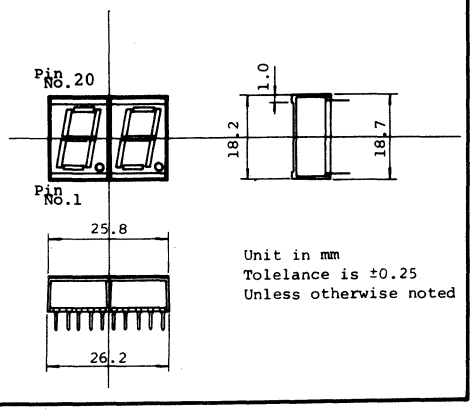

49. OUTLINE DRAWINGS

PY1211

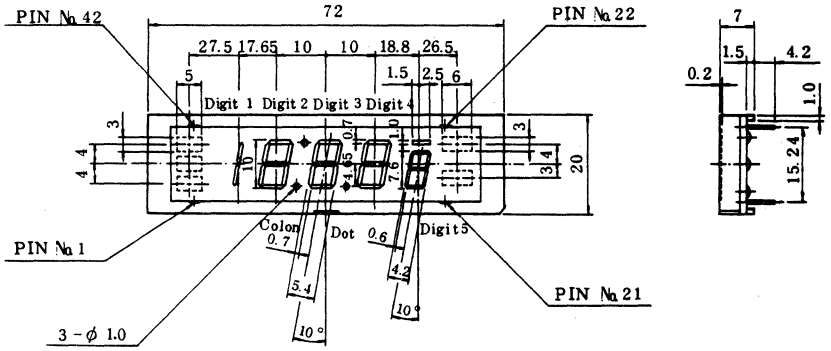

PY1212

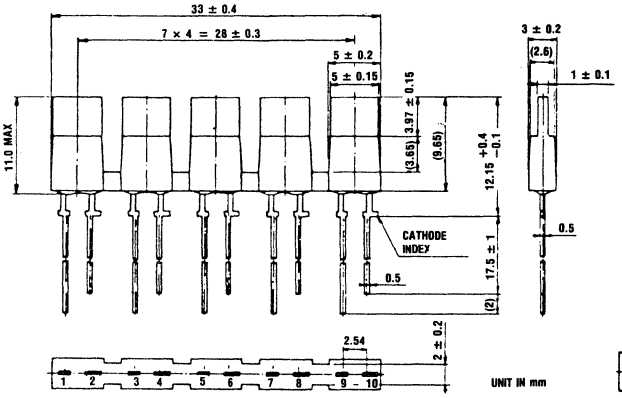

PY1213

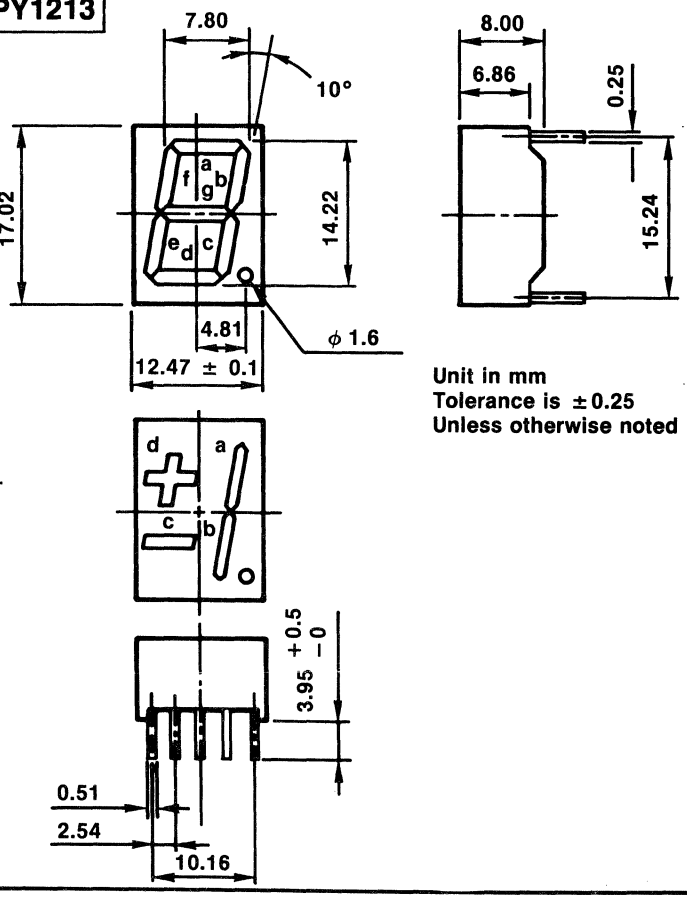

PY1216

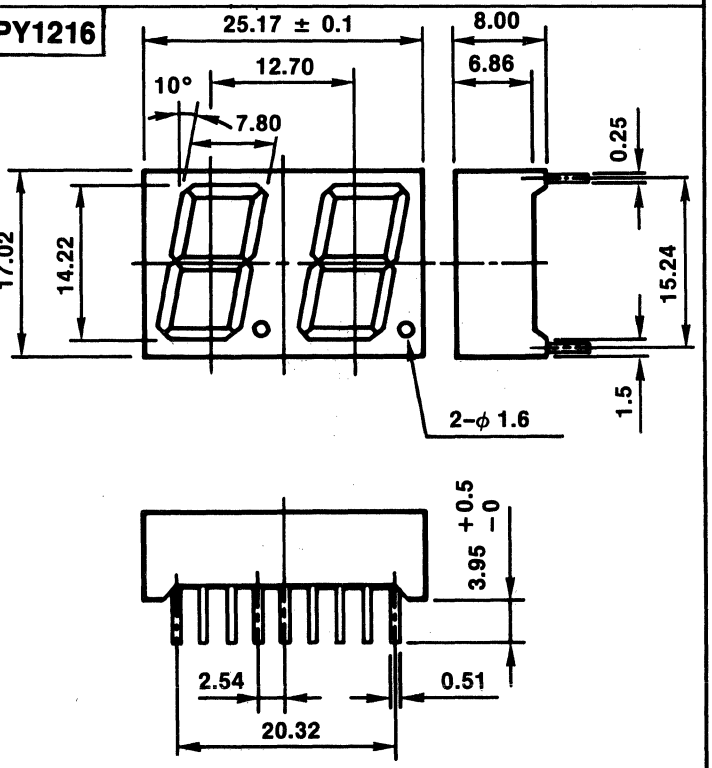

49. OUTLINE DRAWINGS

PY1219

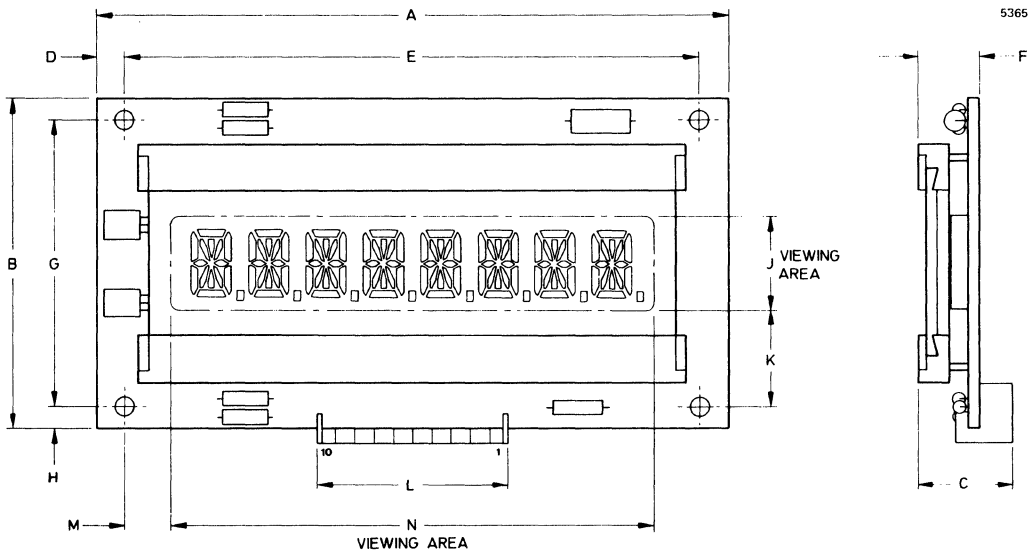

	A	B	C	D	E	F	G	H	J	K	L	M	N
PY1219	84.0	44.0 MAX	13.0	3.81	76.2 MAX	8.50	38.10	3.18	12.50	12.80	25.4	6.10	64.0

Dimensions in m.m.

PY1220

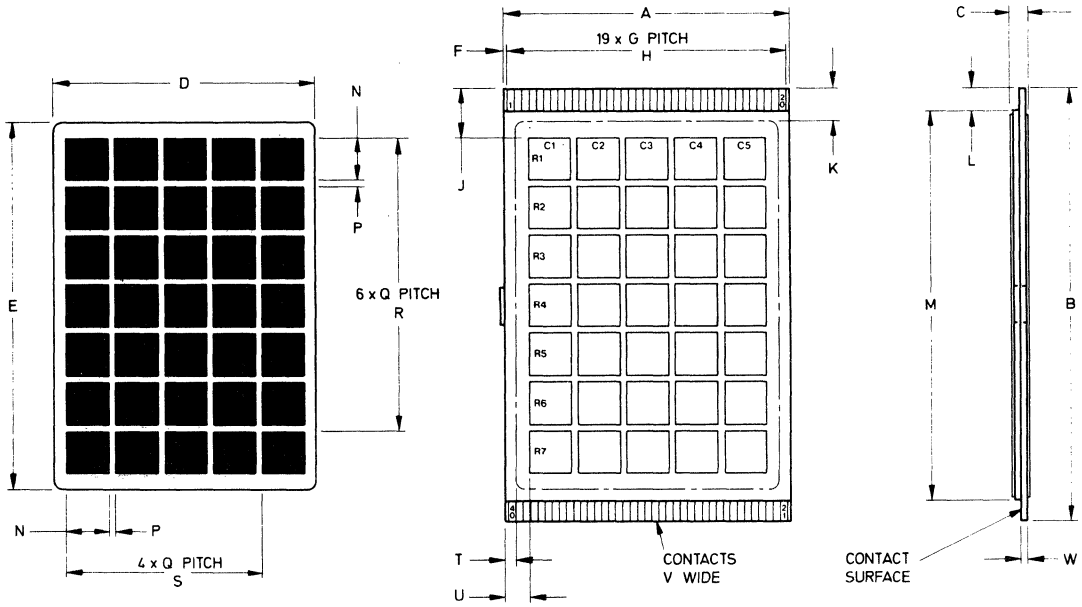

	A	B	C	D	E	F	G	H	J	K	L	M	N	P	Q	R	S	T	U	V	W
PY1220	50.8	77.0	3.00 MAX	46.8	65.4	0.64	2.54	48.2	8.55	5.80	3.80	69.4	7.70	1.0	8.70	52.22	34.8	2.00	4.15	1.27	1.10

Dimensions in m.m.

49. OUTLINE DRAWINGS

PY1221

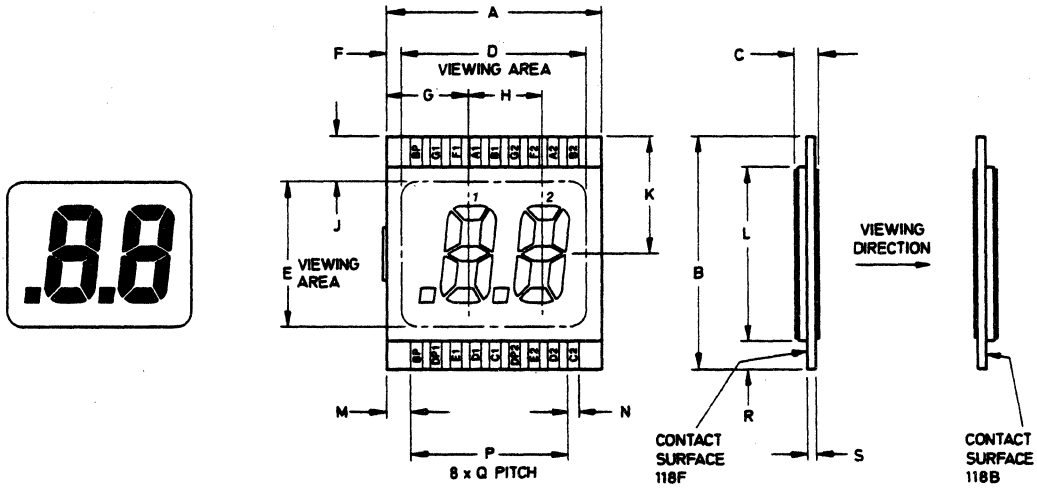

	A	B	C	D	E	F	G	H	J	K	L	M	N	P	Q	R	S
PY1221	27.9	30.48	3.00 MAX	23.90	18.86	2.00 MAX	10.6	9.5	5.8	15.24	22.86	3.16	1.27	20.32	2.54	3.81	1.10

Dimensions in m.m.

PY1222

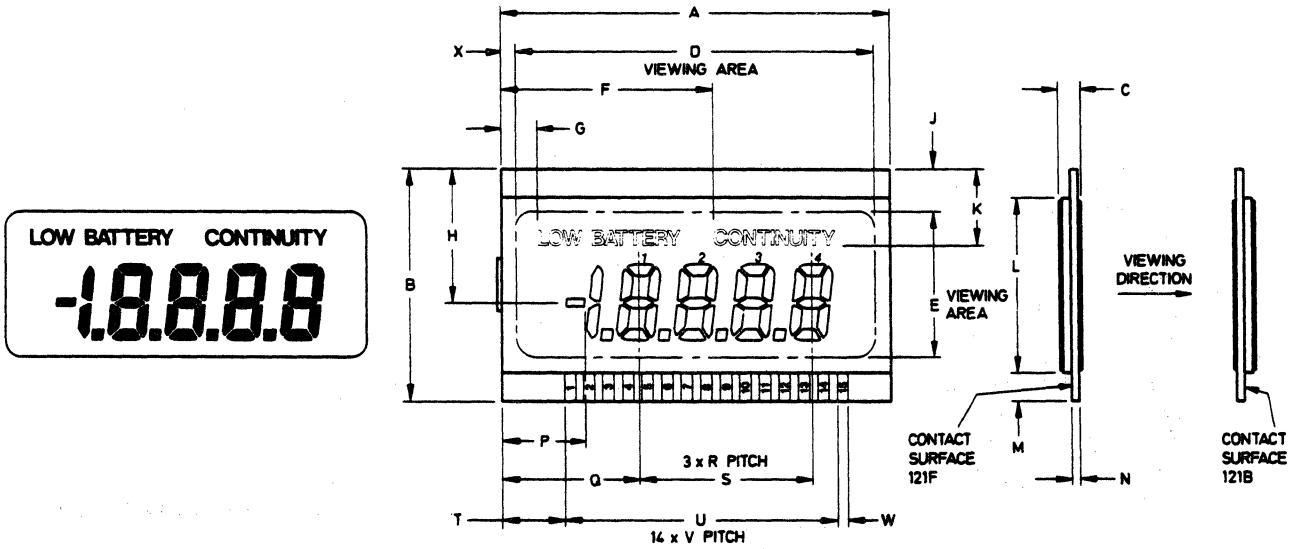

	A	B	C	D	E	F	G	H	J	K	L	M	N	P	Q	R	S	T	U	V	W	X
PY1222	50.8	30.48	3.00	46.8	18.9	27.5	4.6	17.5	5.80	10.0	22.86	3.80	1.10	10.94	17.9	7.50	22.5	8.25	35.5	2.54	1.27	2.00 MAX

Dimensions in m.m.

49. OUTLINE DRAWINGS

PY1235

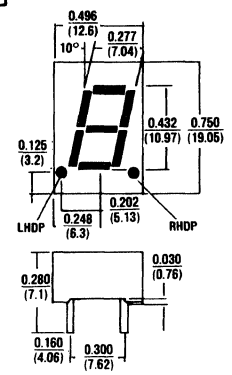

PY1236

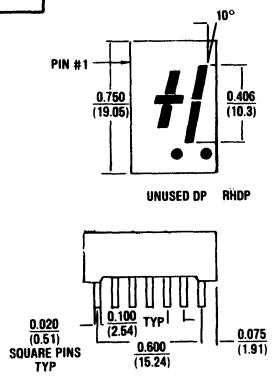

PY1238

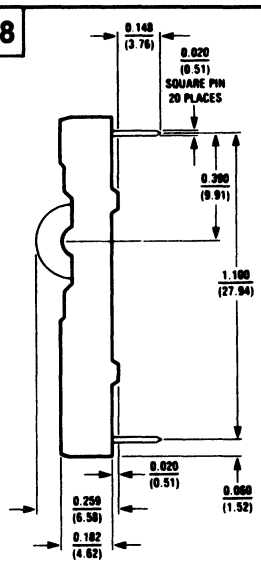

PY1237

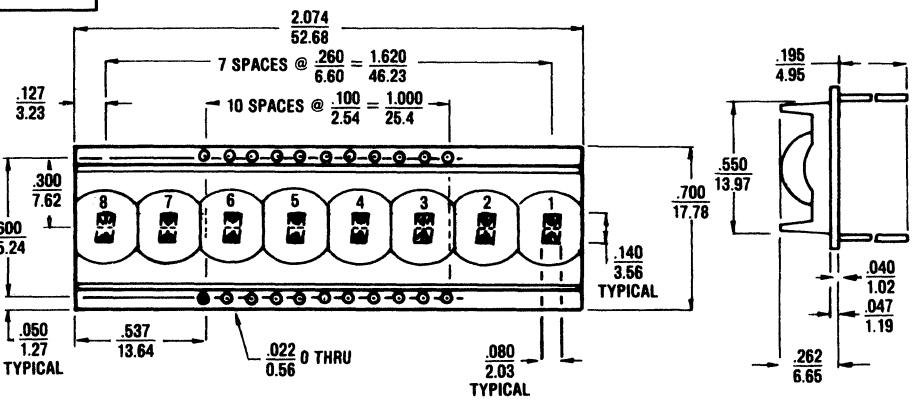

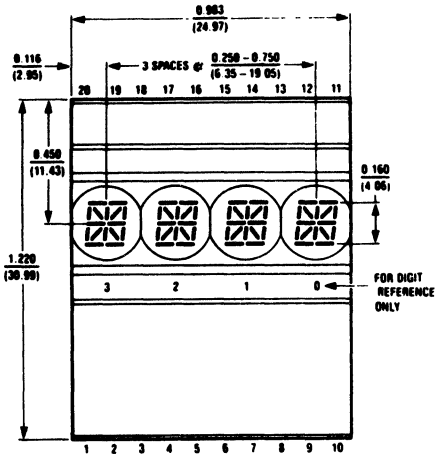

PY1239

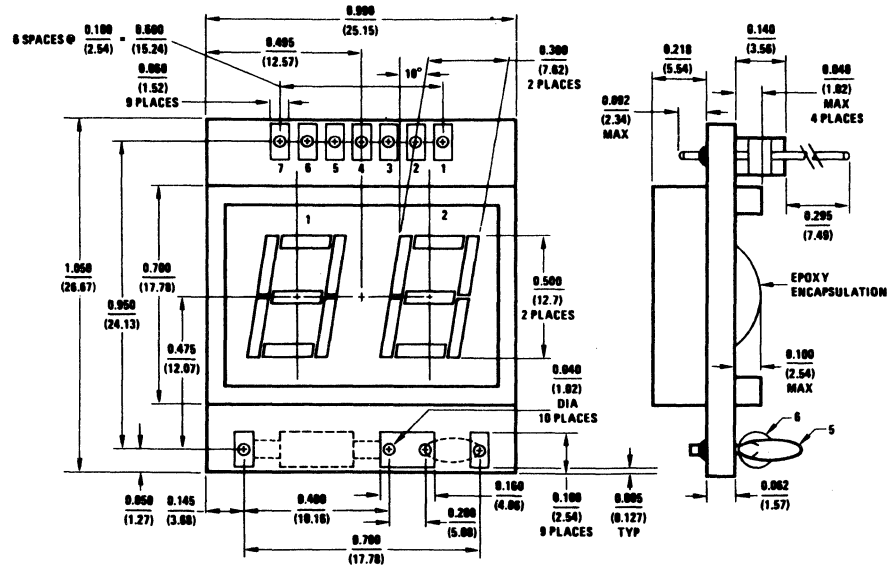

PY1249

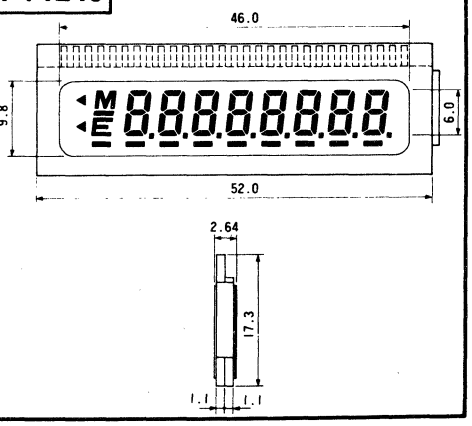

49. OUTLINE DRAWINGS

PY1240

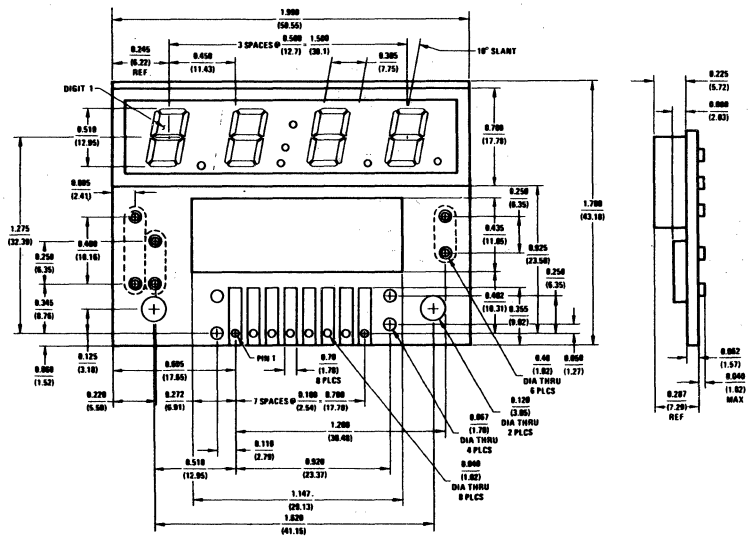

PY1242

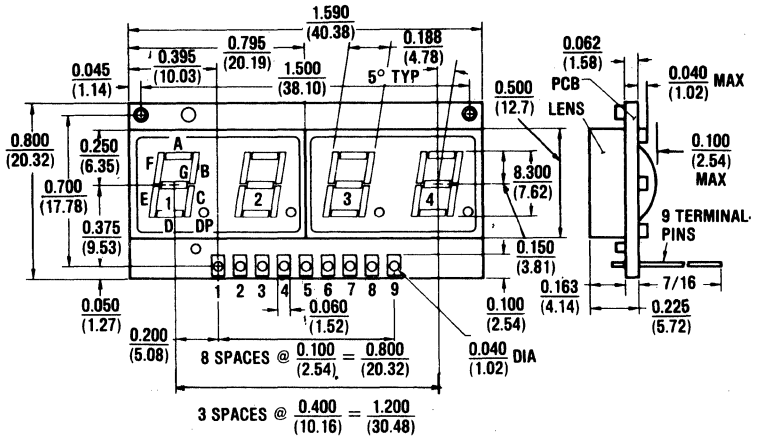

PY1241

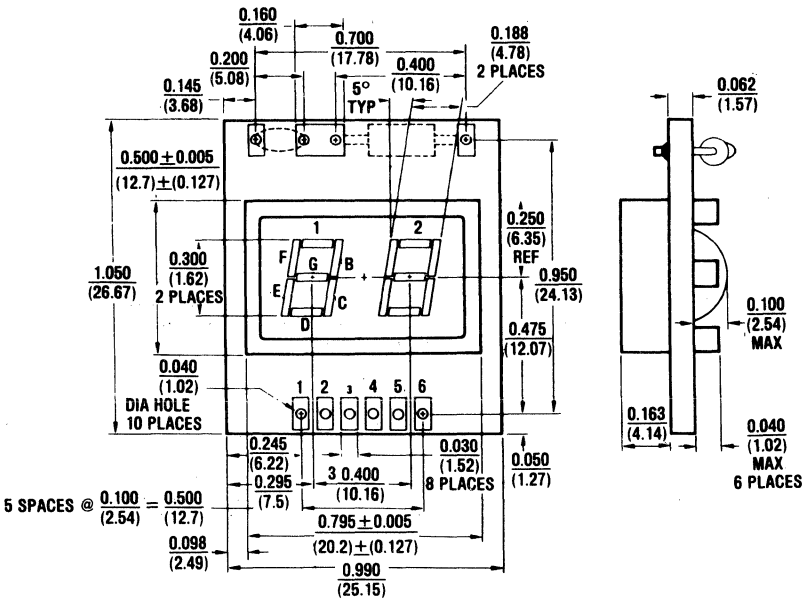

49. OUTLINE DRAWINGS

PY1243

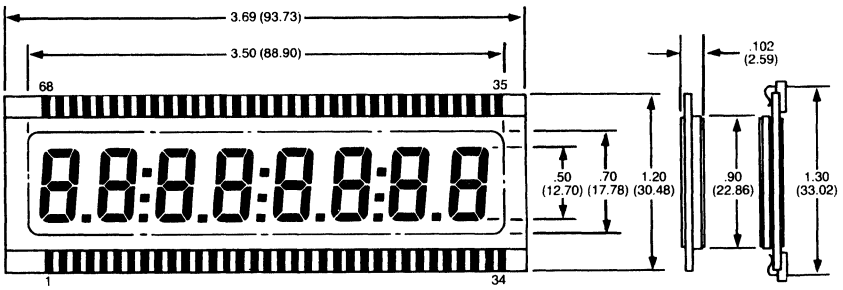

PY1244

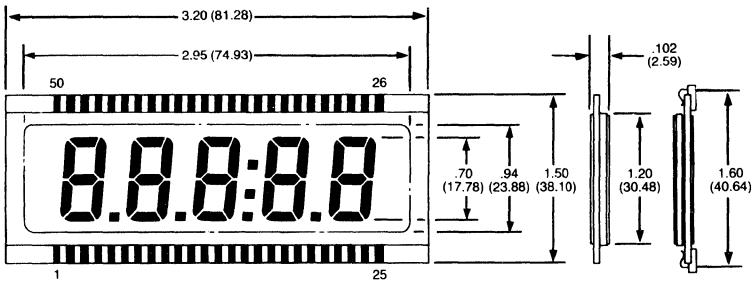

PY1245

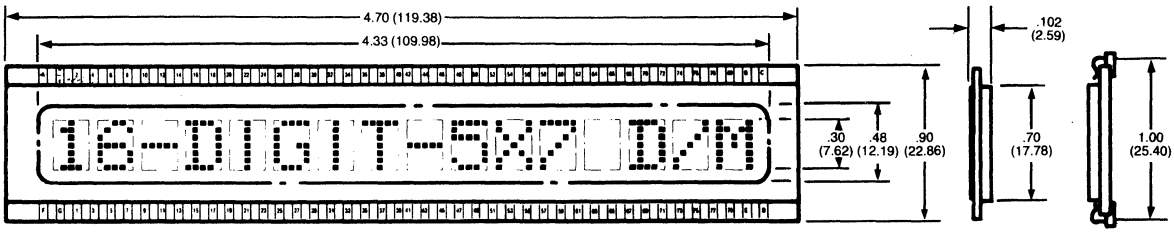

Pad Spacing .100 (2.54)

PY1246

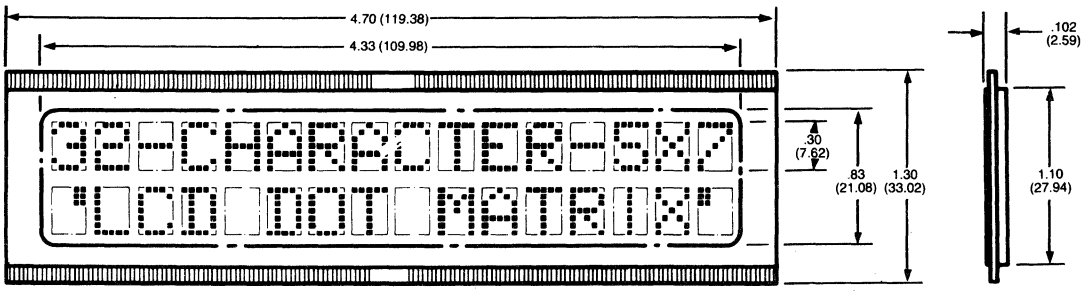

Pad Spacing .05 (1.27)

49. OUTLINE DRAWINGS

PY1247

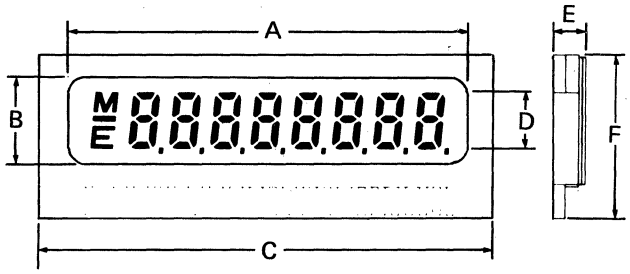

	A	B	C	D	E	F
PY1247	35.0	7.65	40.0	5.0	2.47	14.4
PY1247a	35.0	9.0	40.0	5.5	2.47	15.0
PY1247b	35.0	9.0	40.0	5.5	1.67	15.0
PY1247c	35.0	10.5	40.0	4.5	1.67	18.0
PY1247d	40.0	10.0	45.0	5.5	2.47	16.0
PY1247e	40.0	10.0	45.0	5.5	1.67	16.0
PY1247f	40.0	10.5	45.0	6.0	1.67	17.0
PY1247g	40.0	10.5	45.0	5.5	1.67	18.0
PY1247h	47.0	9.0	51.5	6.2	1.67	15.0
PY1247i	46.0	9.0	52.0	6.0	2.47	15.0
PY1247j	46.0	8.5	52.0	6.0	2.47	15.0
PY1247k	46.0	9.5	52.0	6.0	1.84	15.0
PY1247l	46.0	9.0	52.0	6.0	1.37	15.0
PY1247m	56.0	9.0	61.0	6.3	2.47	15.0
PY1247n	47.0	10.3	52.0	6.0	2.47	17.3

PY1248

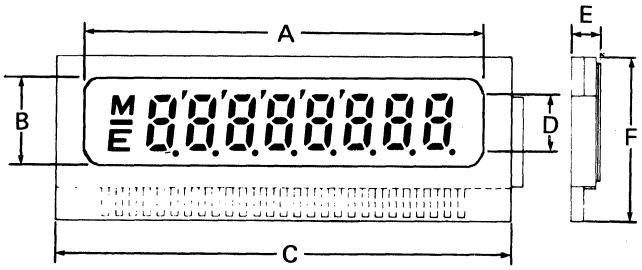

	A	B	C	D	E	F
PY1248	35.0	7.65	40.0	5.0	2.47	14.4
PY1248a	46.0	9.0	52.0	6.0	2.47	15.0
PY1248b	46.0	9.0	52.0	6.0	1.37	15.0
PY1248c	46.0	9.0	52.0	6.0	1.07	15.0

PY1250

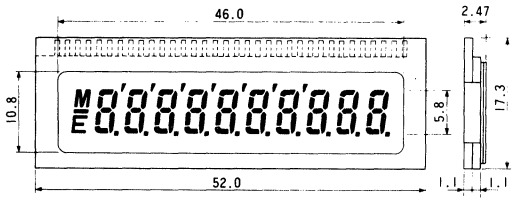

PY1251

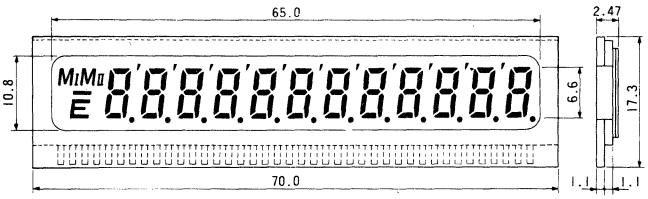

PY1252

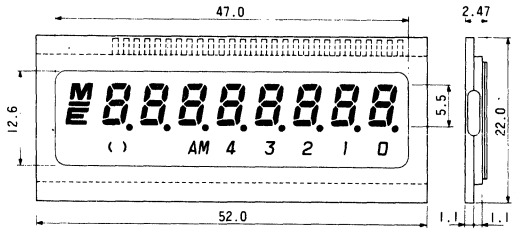

PY1253

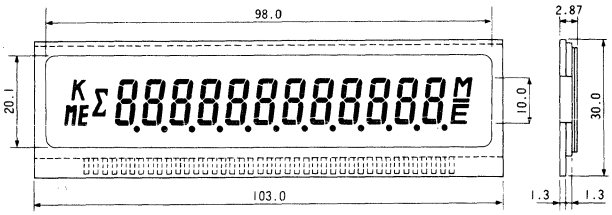

49. OUTLINE DRAWINGS

PY1254

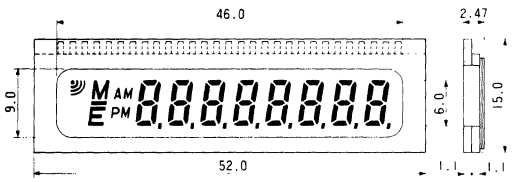

PY1255

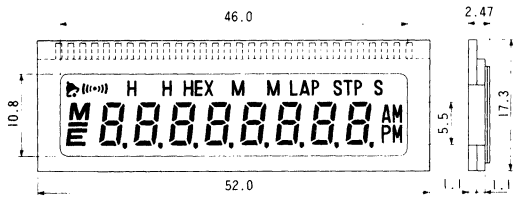

PY1256

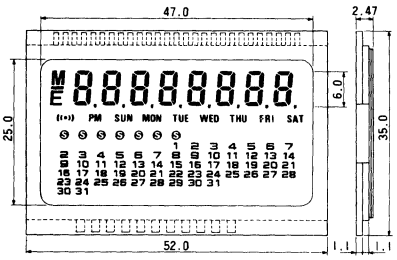

PY1257

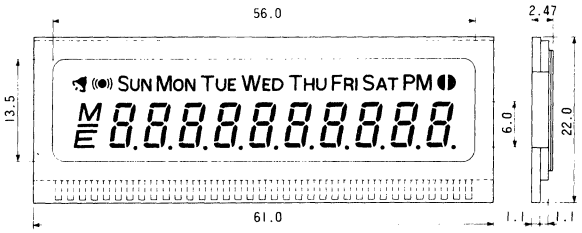

PY1258

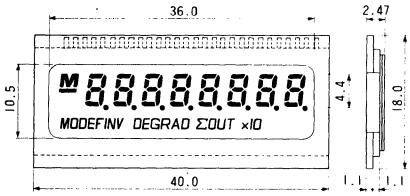

PY1259

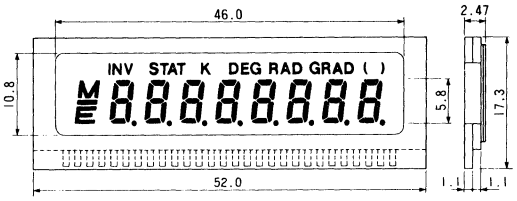

PY1260

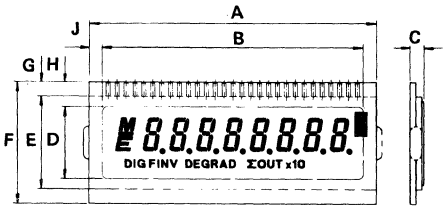

Suffix	A	B	C	D	E	F	G	H	J	UNITS
PY1260	52 TYP	47 TYP	2.5 TYP	13 TYP	17 TYP	22 TYP	2.5 TYP	4.5 TYP	2.5 TYP	MM

PY1261

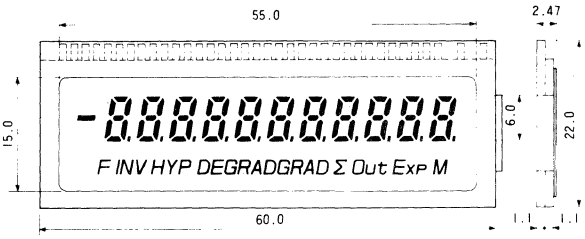

49. OUTLINE DRAWINGS

PY1262

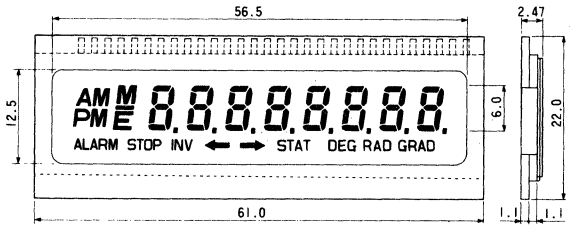

PY1263

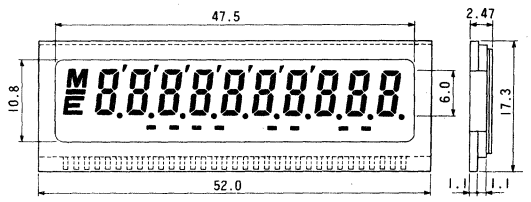

PY1264

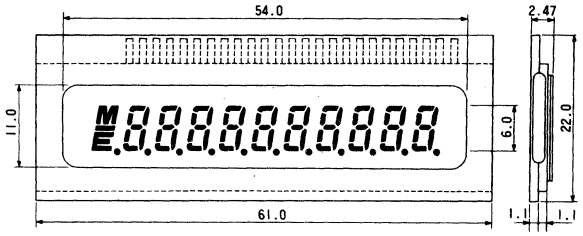

PY1265

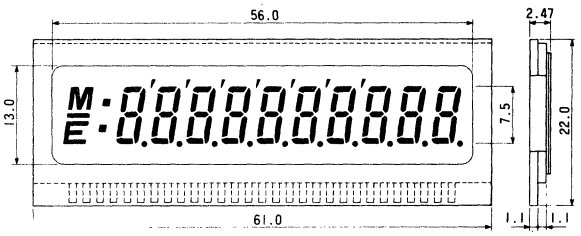

PY1266

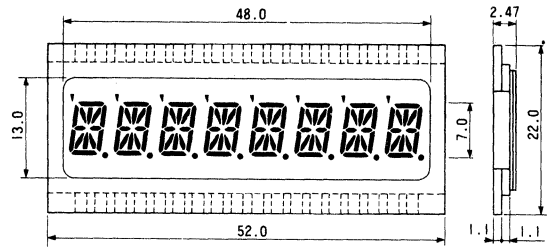

PY1267

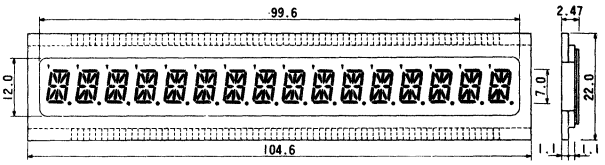

PY1268

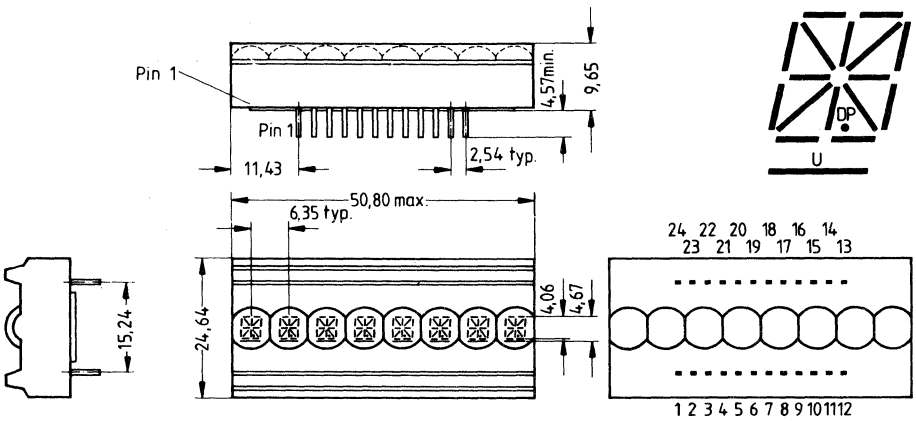

49. OUTLINE DRAWINGS

PY1269

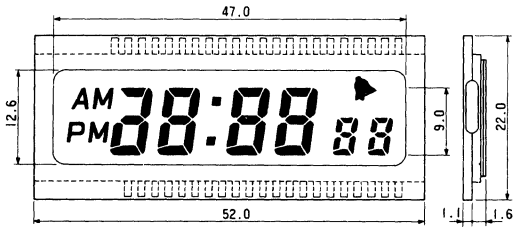

PY1270

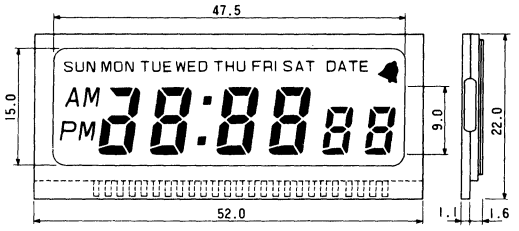

PY1271

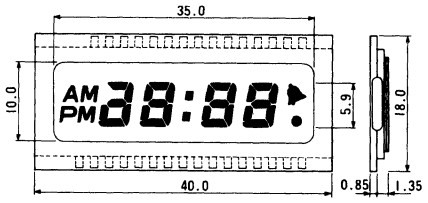

PY1272

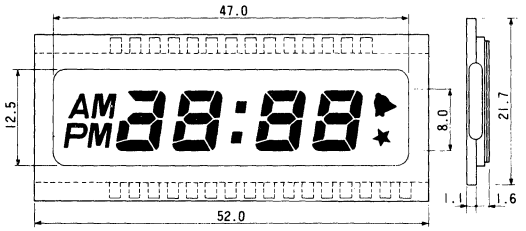

PY1273

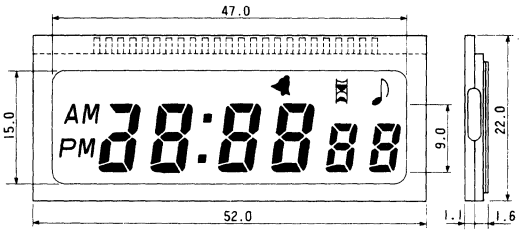

PY1274

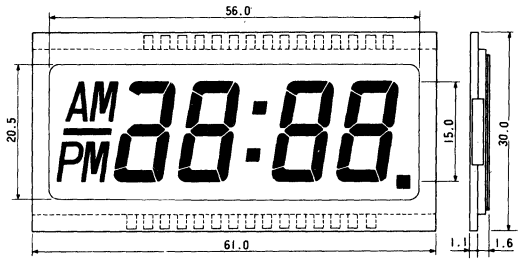

PY1275

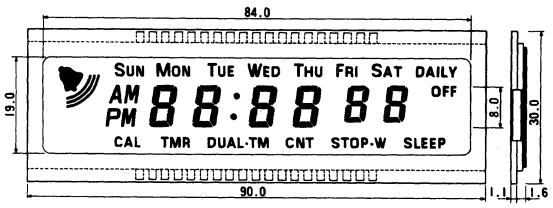

PY1276

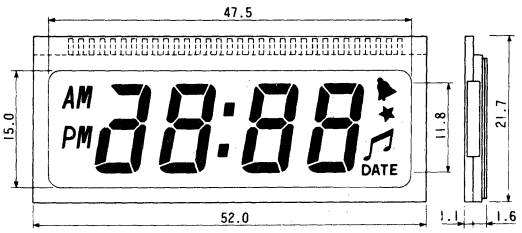

49. OUTLINE DRAWINGS

PY1277

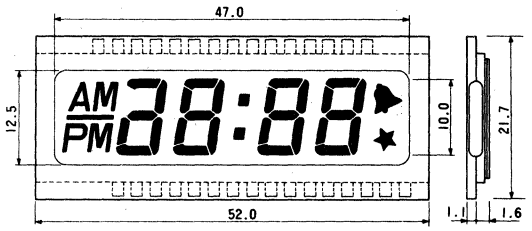

PY1278

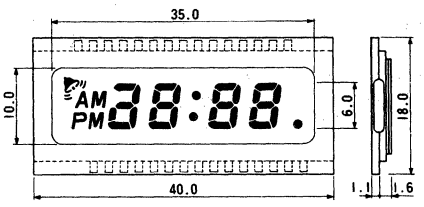

PY1279

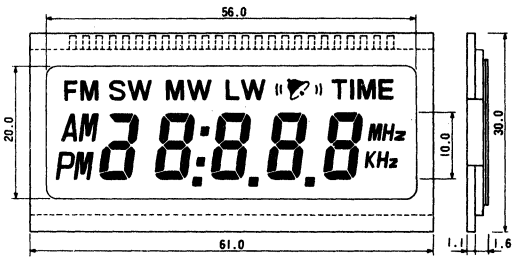

PY1280

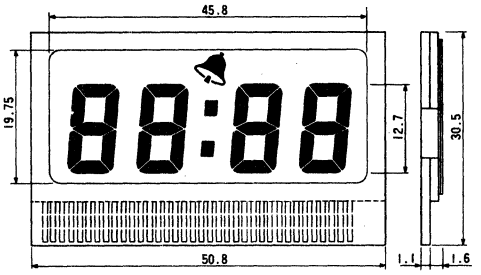

PY1281

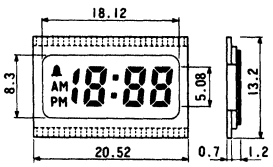

PY1282

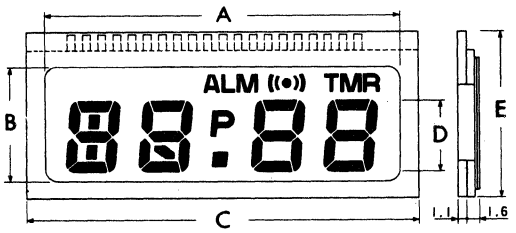

	A	B	C	D	E
PY1282	47.0	15.0	52.0	9.4	22.0
PY1282a	35.0	11.5	40.0	6.8	18.0
PY1282b	14.8	7.2	17	4.1	11.0

PY1284

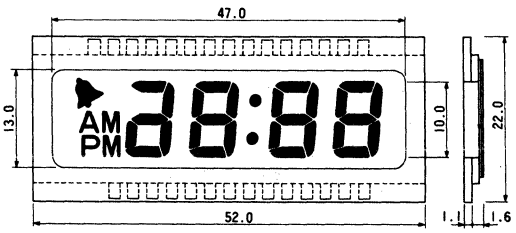

PY1285

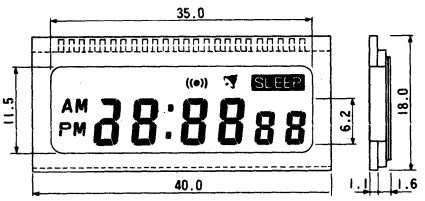

49. OUTLINE DRAWINGS

PY1286

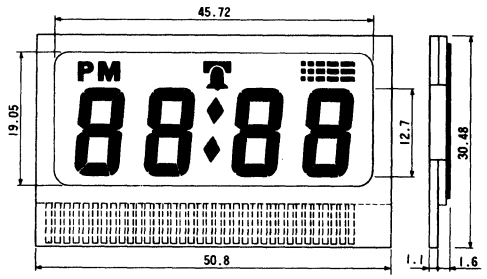

PY1287

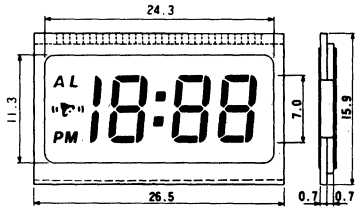

PY1288

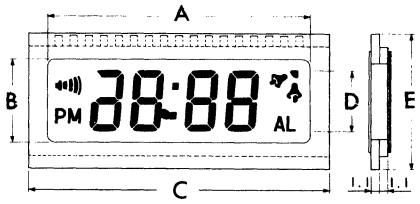

	A	B	C	D	E
PY1288	35.0	11.0	40.0	8.0	18.0
PY1288a	47.0	15.5	52.0	12.0	22.0

PY1289

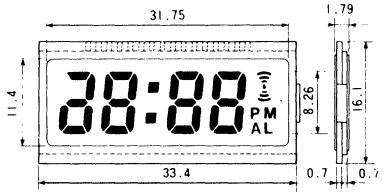

PY1290

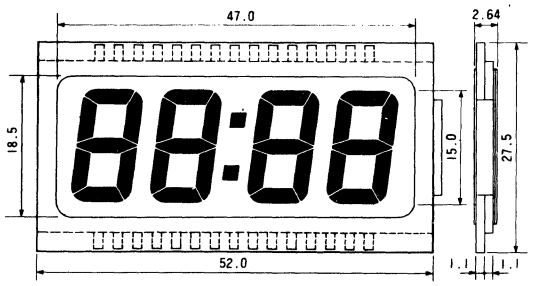

PY1291

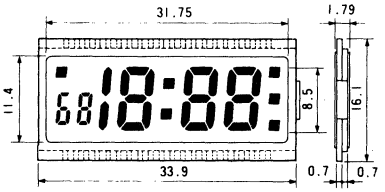

PY1292

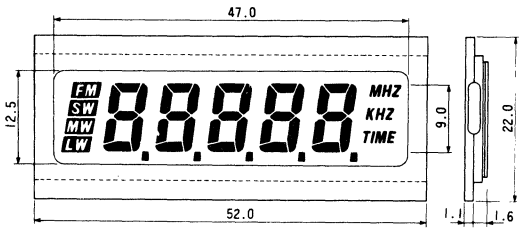

PY1293

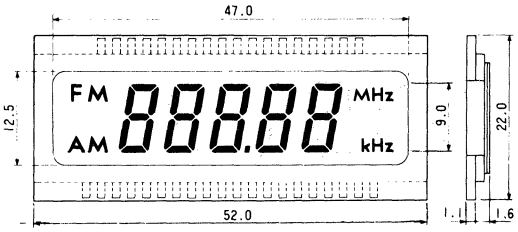

49. OUTLINE DRAWINGS

PY1294

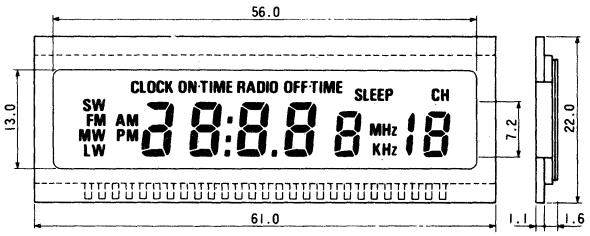

PY1295

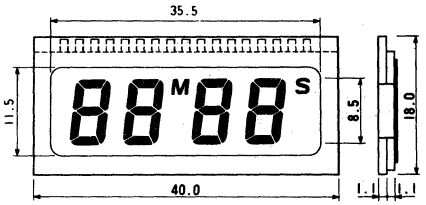

PY1296

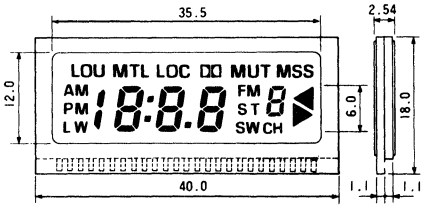

PY1283

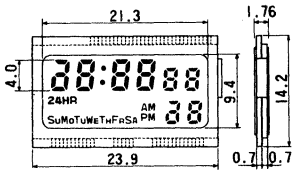

PY1297

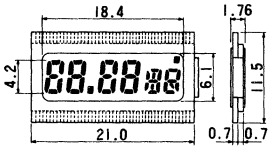

PY1298

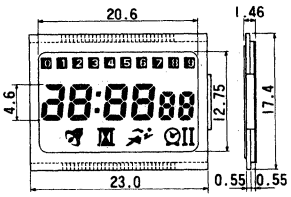

PY1299

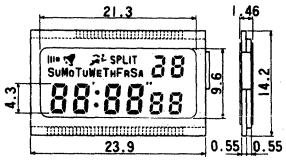

PY1300

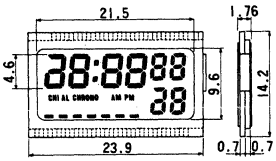

49. OUTLINE DRAWINGS

PY1301

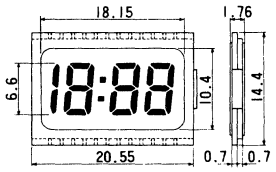

PY1302

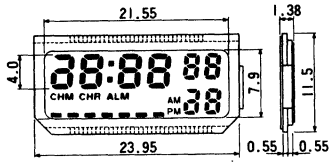

PY1303

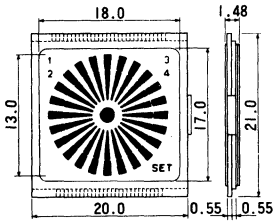

PY1304

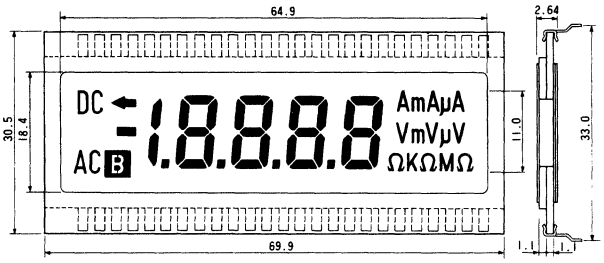

PY1305

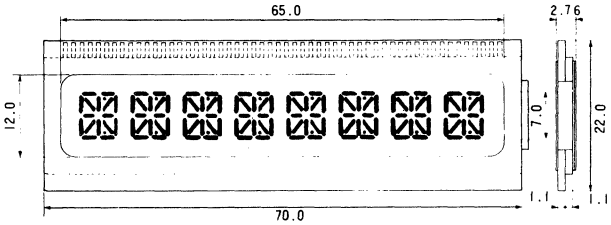

PY1306

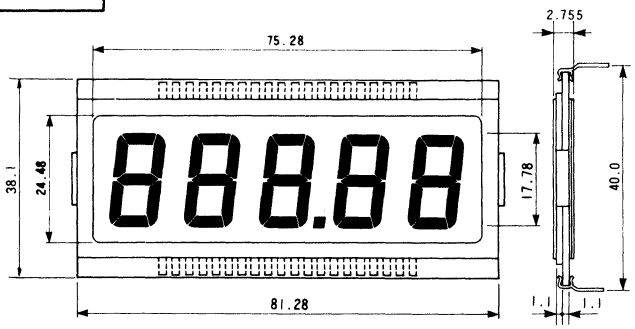

PY1307

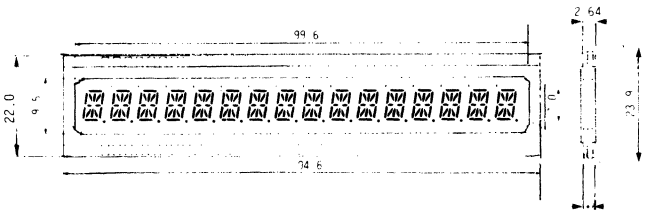

PY1308

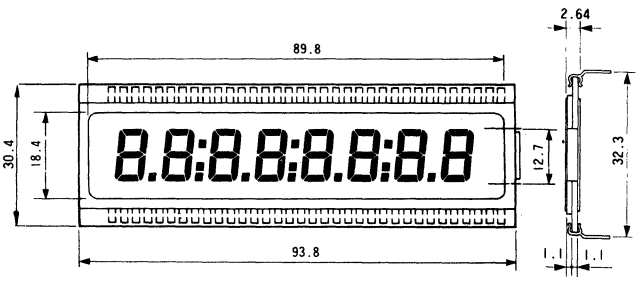

PY1310

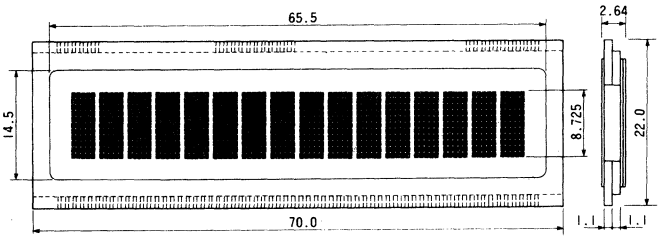

49. OUTLINE DRAWINGS

PY1309

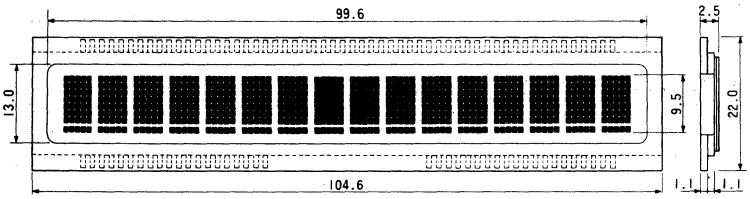

PY1311

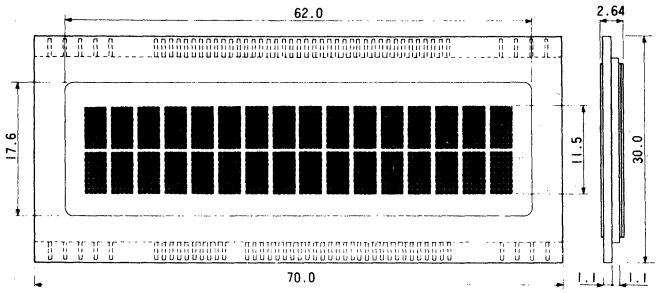

PY1312

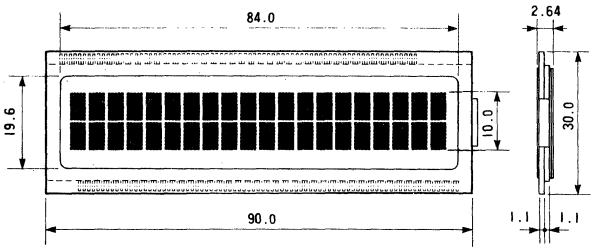

PY1313

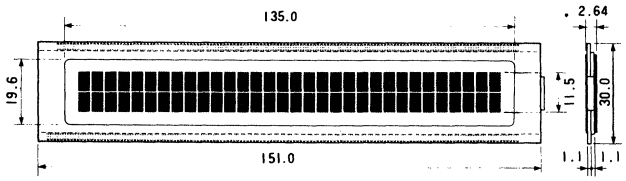

PY1316

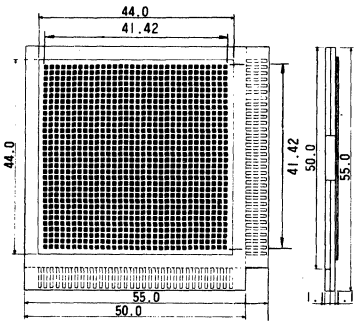

PY1317

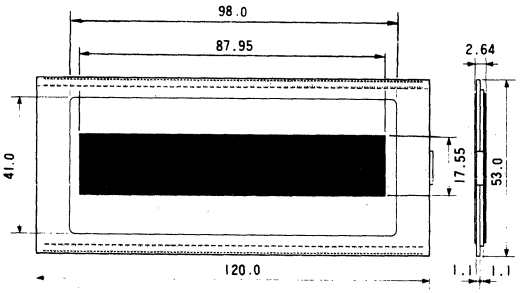

PY1318

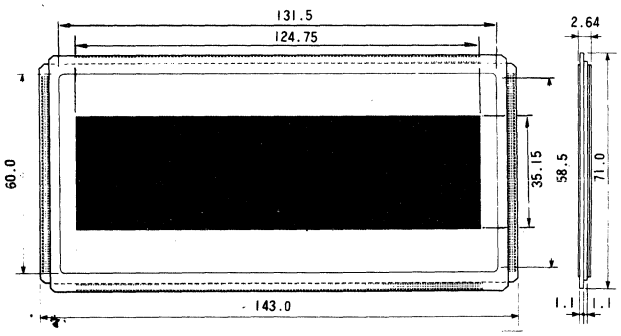

49. OUTLINE DRAWINGS

PY1314

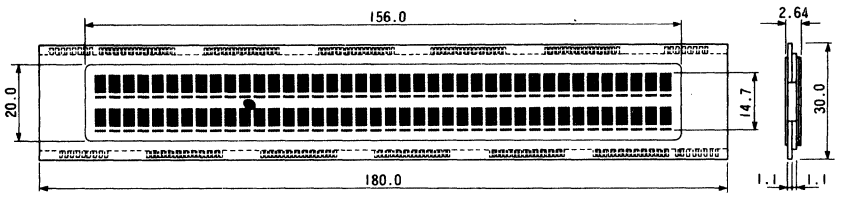

PY1315

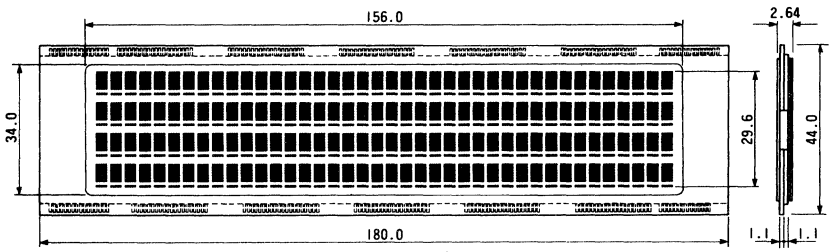

PY1319

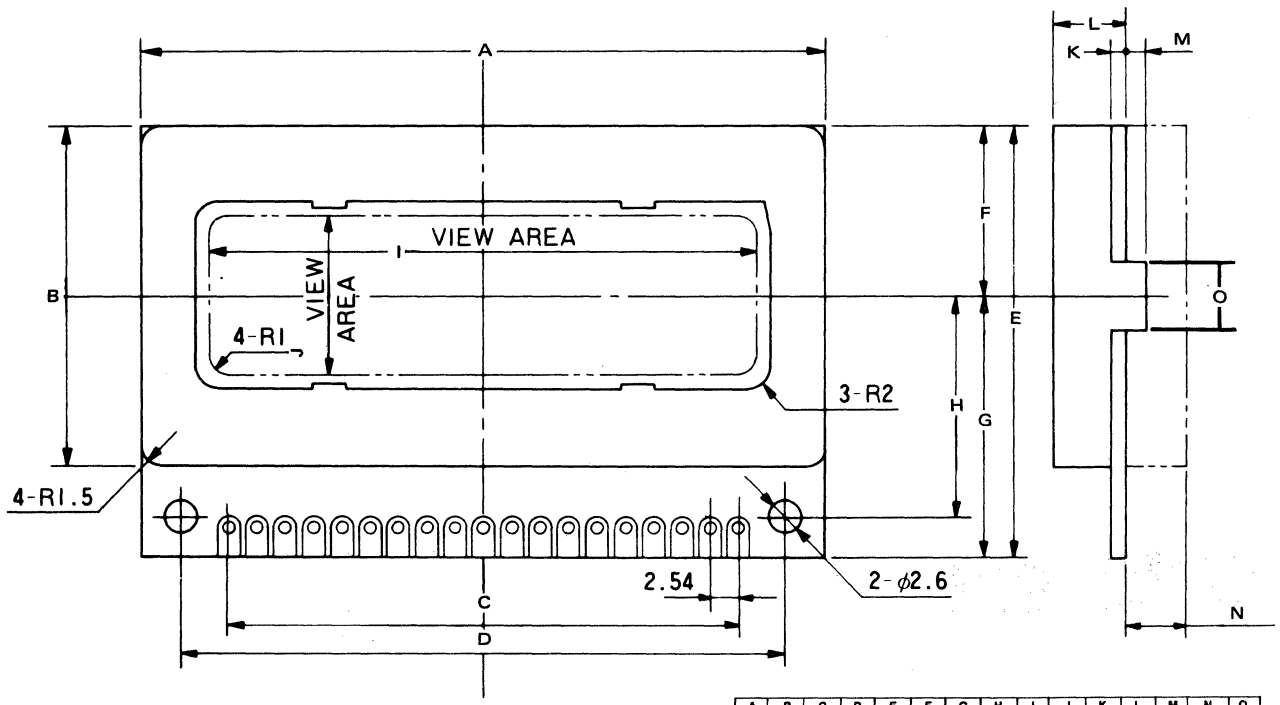

	A	B	C	D	E	F	G	H	I	J	K	L	M	N	O
PY1319	60.0	30.0	45.72	53.0	38.0	15.0	23.0	19.5	48	14.0	1.1	6.1	1.8	5.0 MAX	
PY1319a	60.0	30.0	45.72	53.0	38.0		23.0	19.5	47	15.3	1.2	6.2	1.8	6.0 MAX	6.0

49. OUTLINE DRAWINGS

PY1320

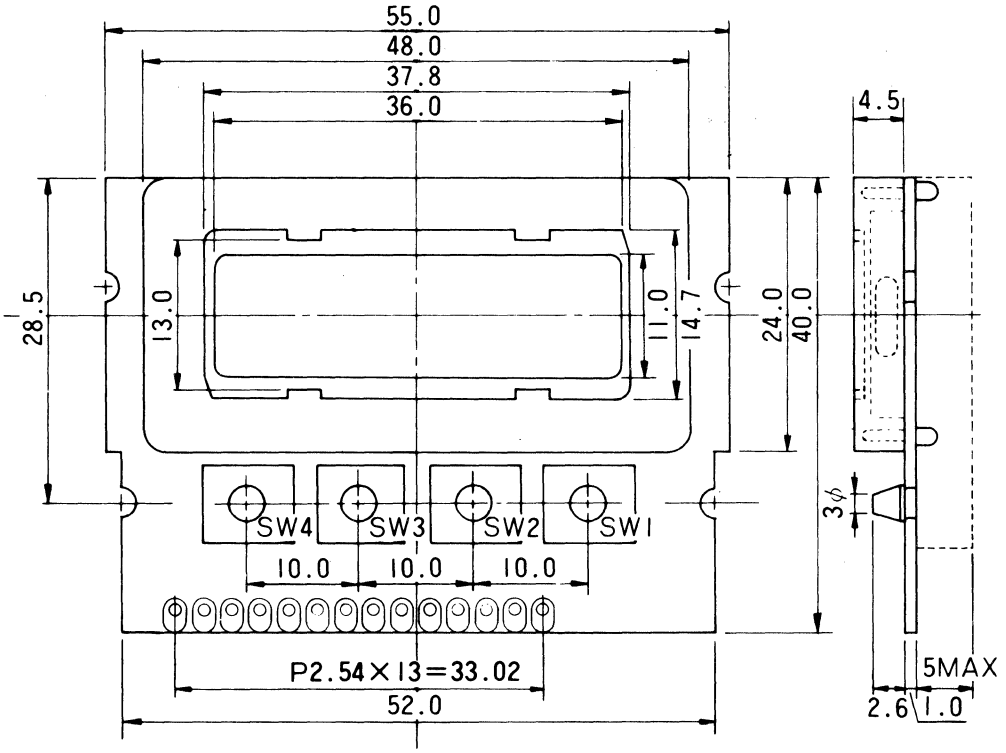

PY1321

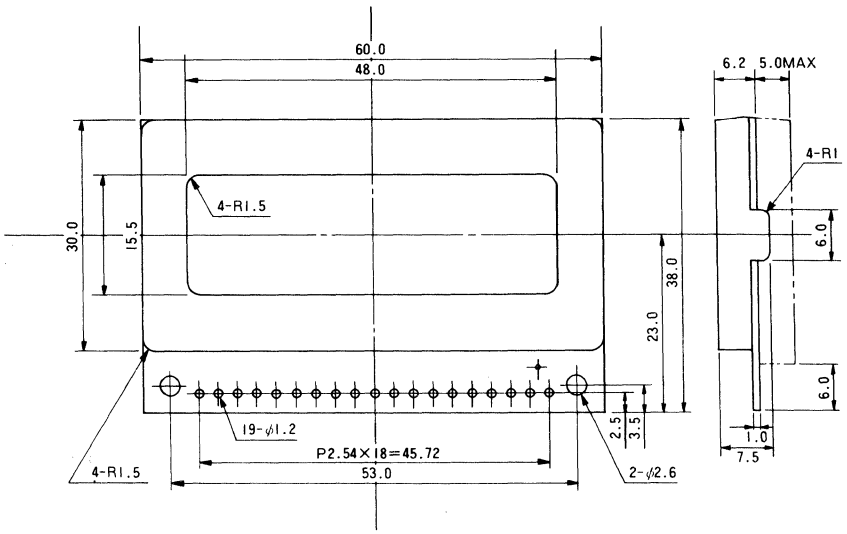

49. OUTLINE DRAWINGS

PY1322

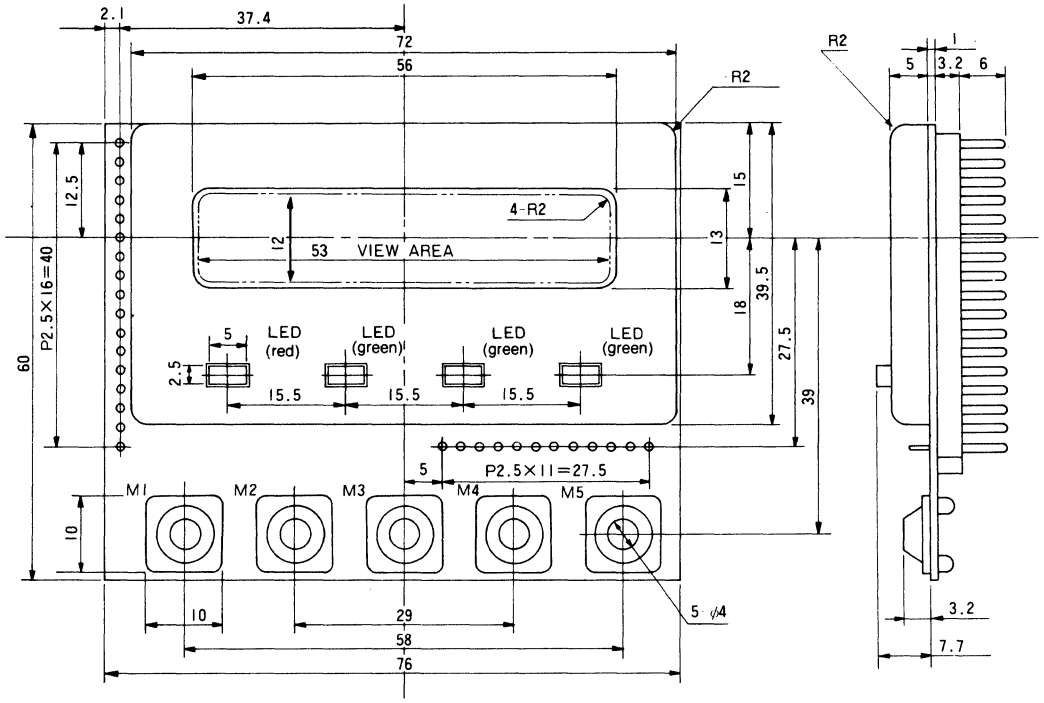

PY1323

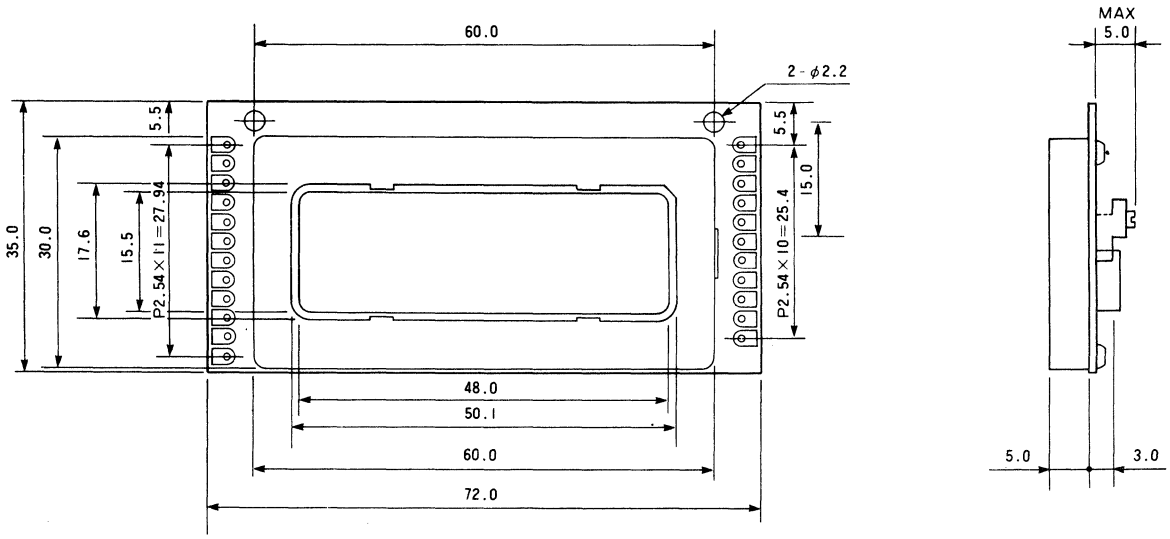

49. OUTLINE DRAWINGS

PY1324

Pin No.	Symbol	Level	Function
1	Vss	——	Power Supply Voltage 0V (GND)
2	VDD	——	Power Supply Voltage +5V
3	Vee	——	Power Supply for Liquid Crystal Drive
4	RS	H/L	Register Select H: Data Input L: Instruction Input
5	R/W	H/L	H: Data Read (Module → MPU) L: Data Write (Module ← MPU)
6	E	H, H→L	Enable Signal
7	DB ϕ	H/L	Data Bus Line
8	DB 1	H/L	〃
9	DB 2	H/L	〃
10	DB 3	H/L	〃
11	DB 4	H/L	〃
12	DB 5	H/L	〃
13	DB 6	H/L	〃
14	DB 7	H/L	〃

■ NOTE: In the data bus line, data transfer is performed two times by the 4-bit or one time by the 8-bit in order to interface with 4-bit or 8-bit MPU.

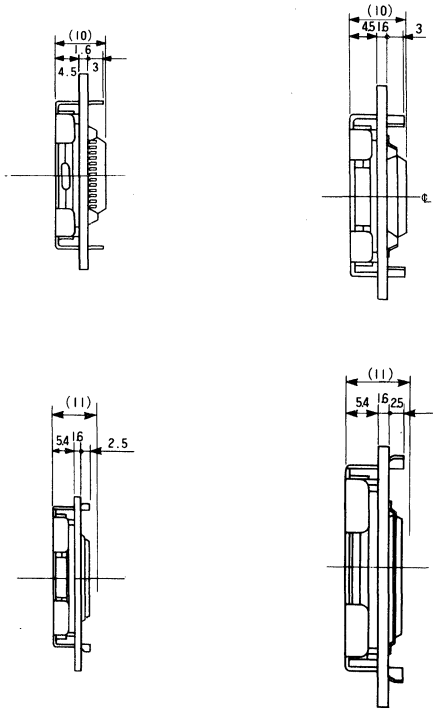

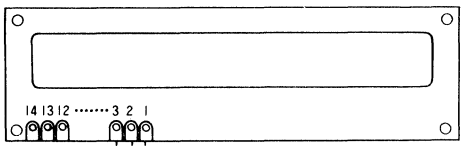

	A	B	C	D	E	F	G	Pkg Detail
PY1324	3.15	2.54	1.42	.512	.394	.177	.118	3
PY1324a	5.12	3.90	1.73	.512	.394	.177	.118	3
PY1324b	3.15	2.54	1.42	.512	.394	.177	.118	2
PY1324c	3.31	2.81	1.73	.630	.433	.213	.098	4
PY1324d	4.57	3.60	1.73	.732	.433	.213	.098	1
PY1324e	6.89	6.00	1.73	.732	.433	.213	.098	1
PY1324f	8.66	6.10	2.09	.748	.394	.177	.118	3
PY1324g	7.17	6.00	1.32	.650	.433	.213	.098	1

PY1325

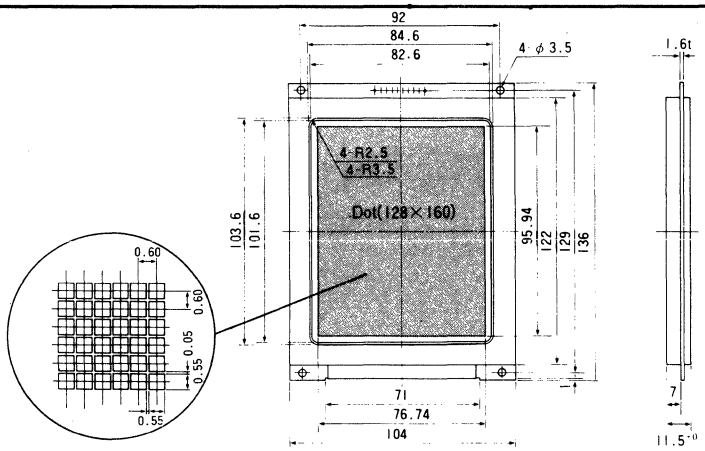

49. OUTLINE DRAWINGS

PY1326

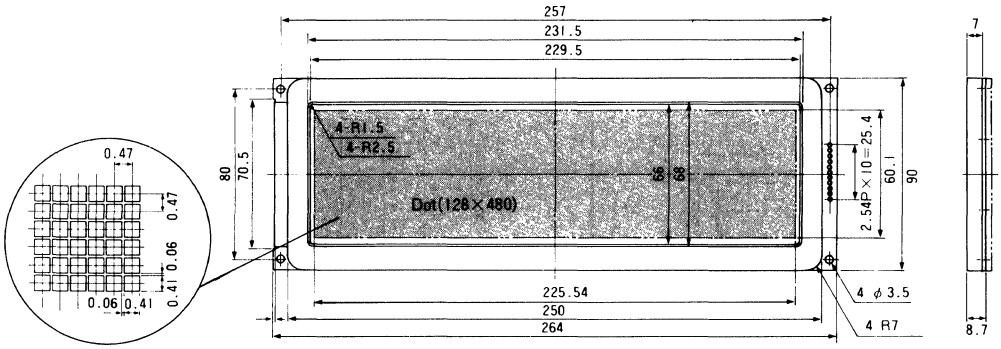

PY1327

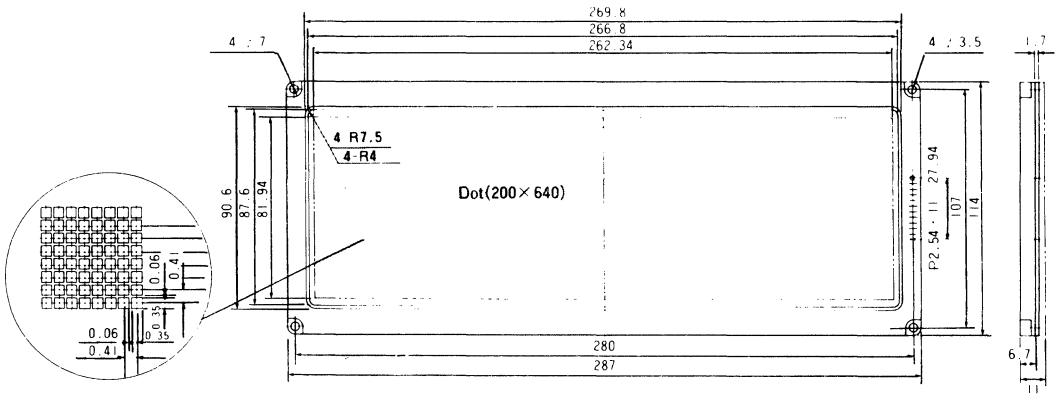

PY1329

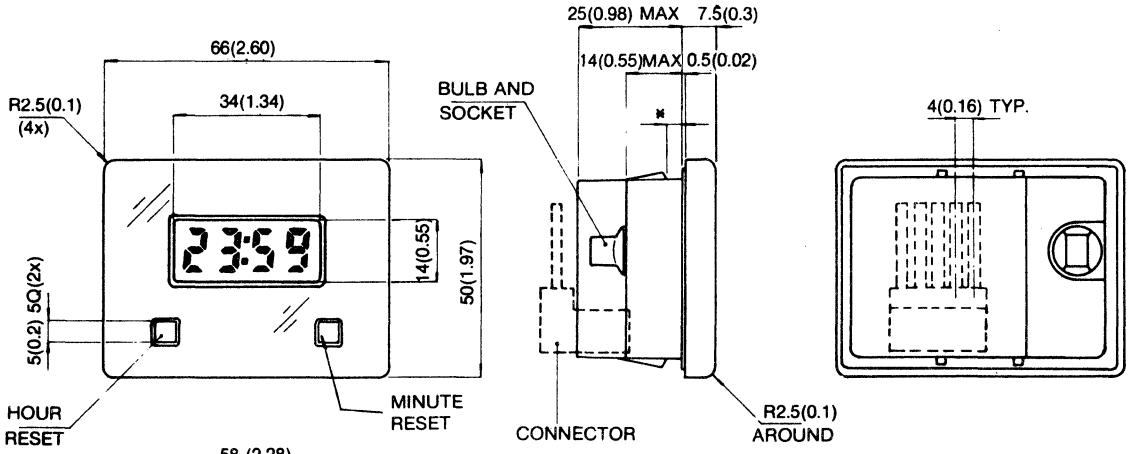

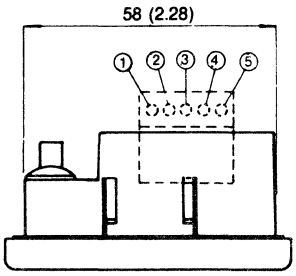

*Clock to be mounted on 3.0 $\pm^{0.2}_{0}$ mm thick panel with an opening of 58.6 $\pm^{0.4}_{0}$ x 43.8 $\pm^{0.4}_{0}$ mm

Power Supply Connections

PIN NO.	FUNCTION
1	+ Lamp or no connection
2	+ Ignition
3	+ Battery
4	Ground
5	No connection

49. OUTLINE DRAWINGS

PY1328

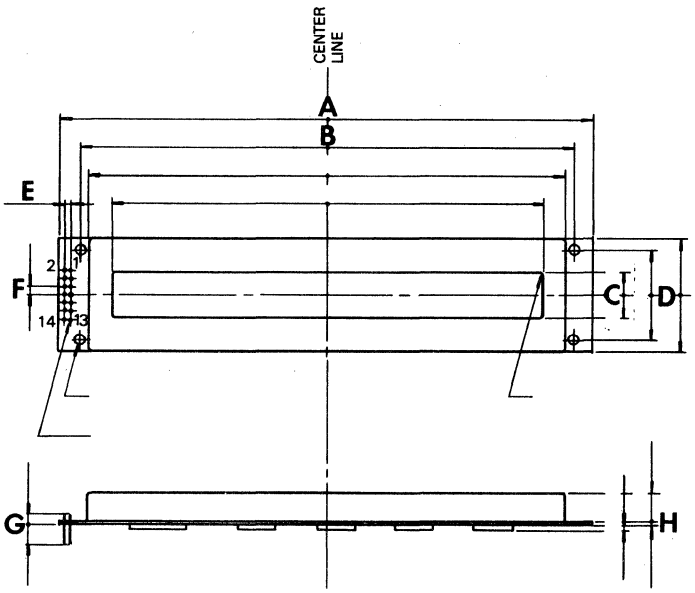

	A	B	C	D	E	F	G	H
PY1328	7.48	6.02	.610	1.57	.100	.100		

PY1330

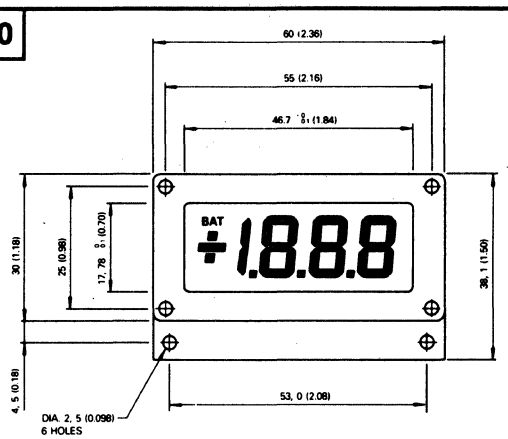

PY1331

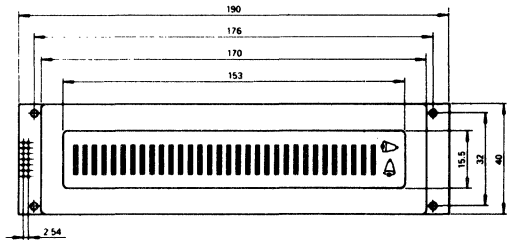

PY1332

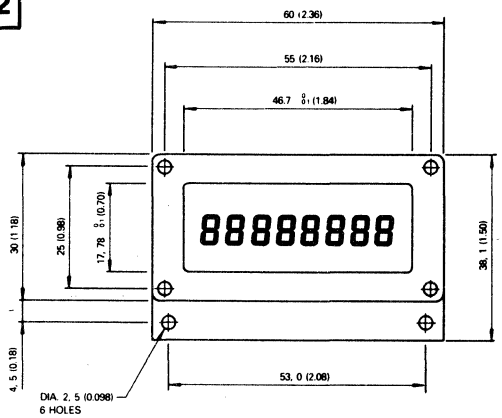

PY1333

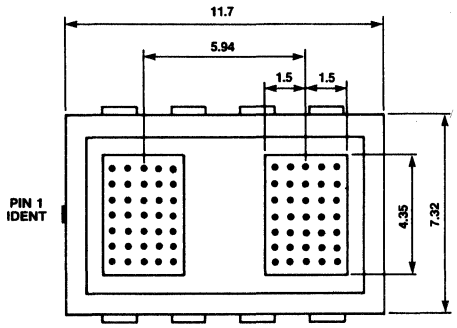

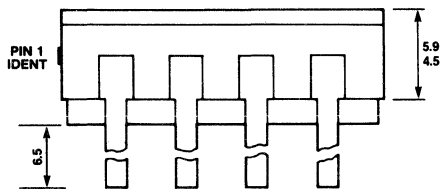

PY1334

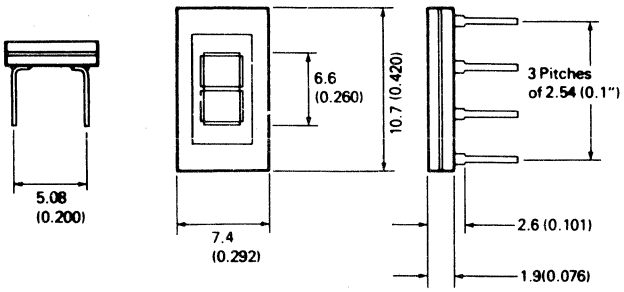

Dimensions in mm

49. OUTLINE DRAWINGS

PY1335

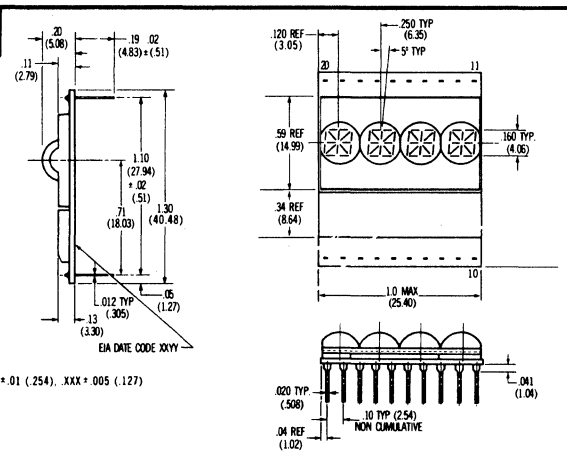

Tolerance: .XX ±.01 (.254), .XXX ±.005 (.127)

PY1336

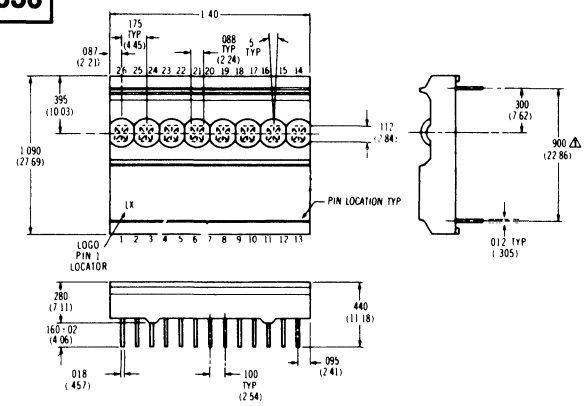

PY1337

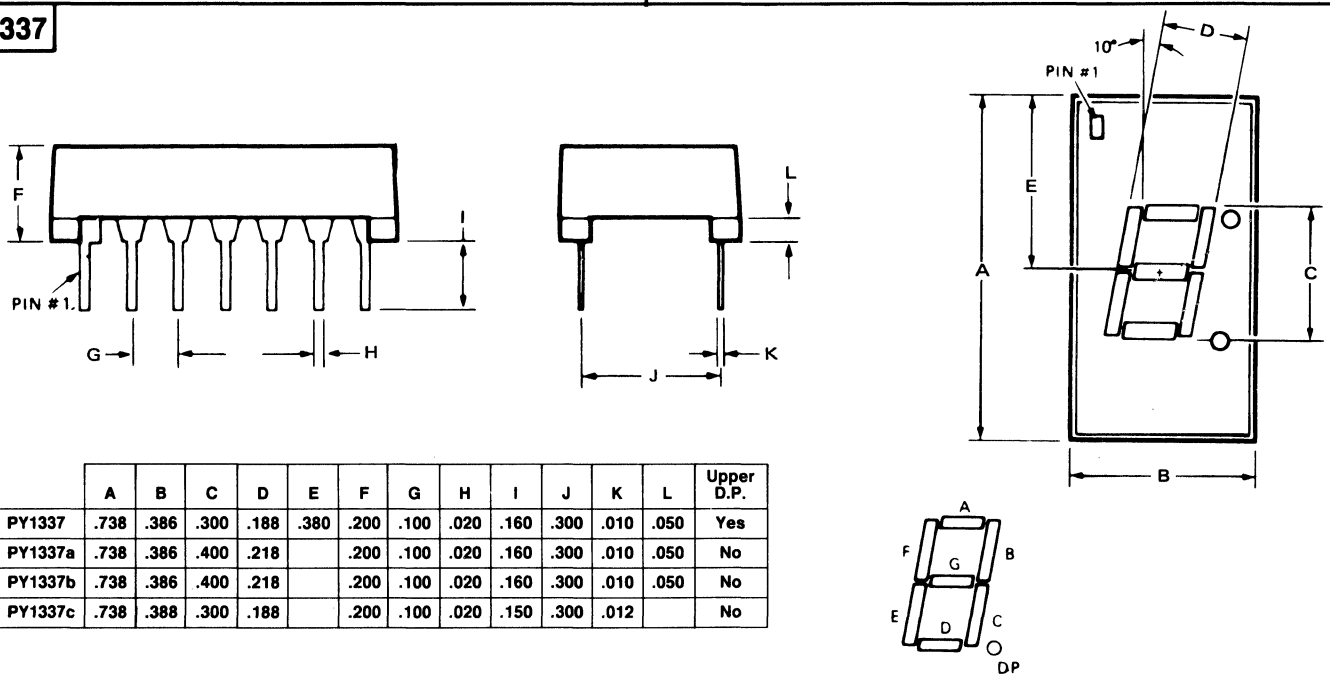

	A	B	C	D	E	F	G	H	I	J	K	L	Upper D.P.
PY1337	.738	.386	.300	.188	.380	.200	.100	.020	.160	.300	.010	.050	Yes
PY1337a	.738	.386	.400	.218		.200	.100	.020	.160	.300	.010	.050	No
PY1337b	.738	.386	.400	.218		.200	.100	.020	.160	.300	.010	.050	No
PY1337c	.738	.388	.300	.188		.200	.100	.020	.150	.300	.012		No

PY1338

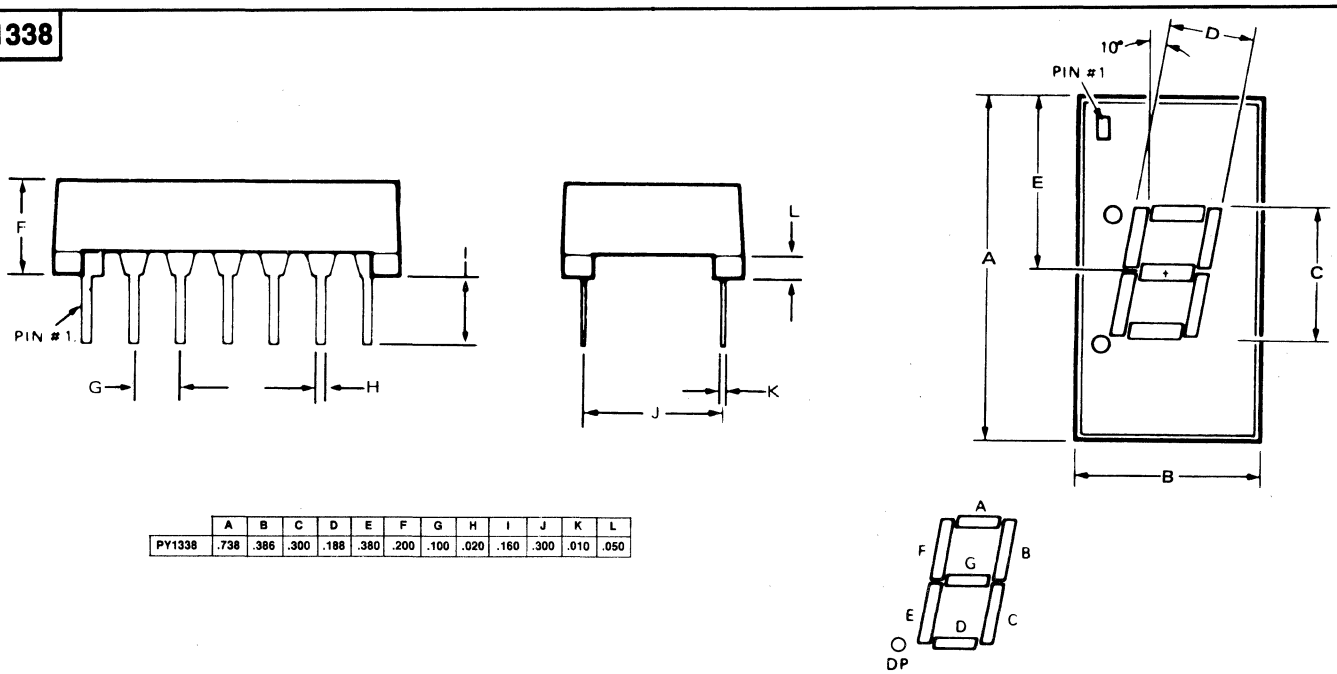

	A	B	C	D	E	F	G	H	I	J	K	L
PY1338	.738	.386	.300	.188	.380	.200	.100	.020	.160	.300	.010	.050

49. OUTLINE DRAWINGS

PY1339

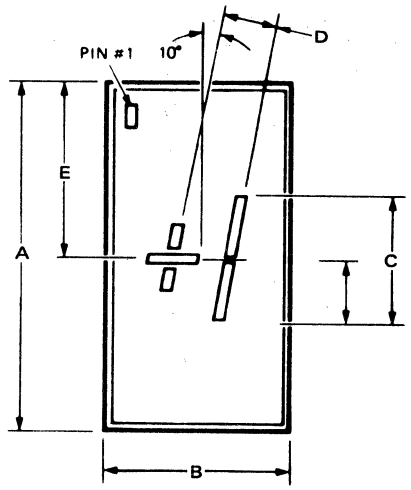

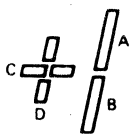

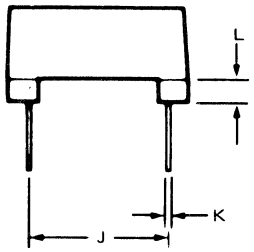

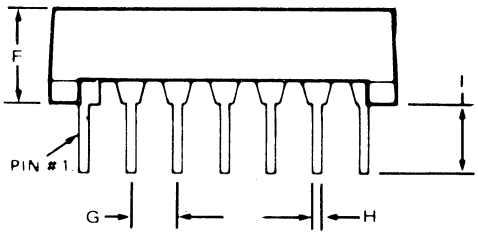

	A	B	C	D	E	F	G	H	I	J	K	L	Lower D.P.
PY1339	.738	.386	.300	.188	.380	.200	.100	.020	.160	.300	.010	.050	No
PY1339a	.739	.386	.400			.200	.100	.020	.160	.300	.010	.050	Yes
PY1339b	.738	.388	.300			.200	.100	.020	.150 MIN	.300	.012		Yes

PY1340

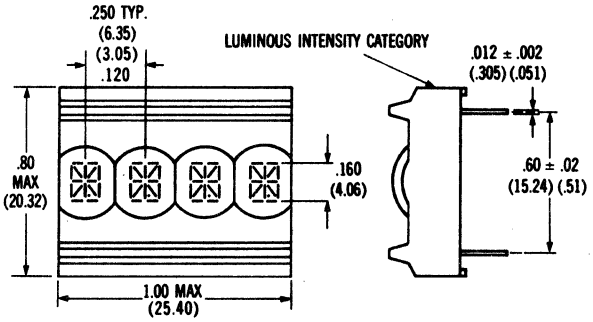

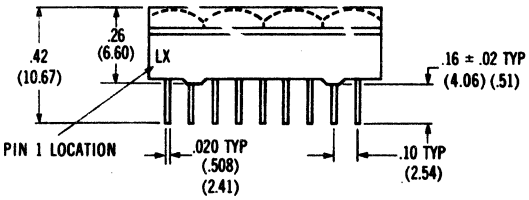

Tolerance: .XX ± .01 (.254), XXX ± .005 (.127)

PY1342

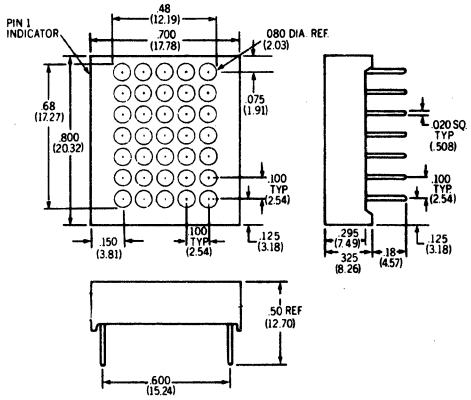

PY1343

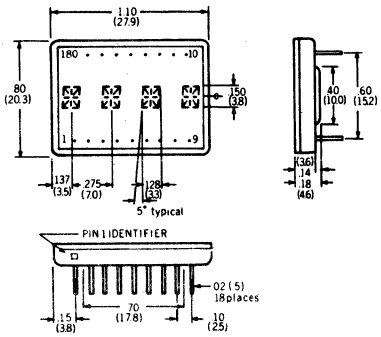

PY1341

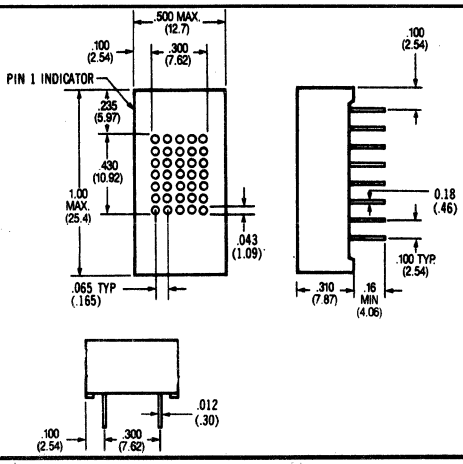

49. OUTLINE DRAWINGS

PY1344

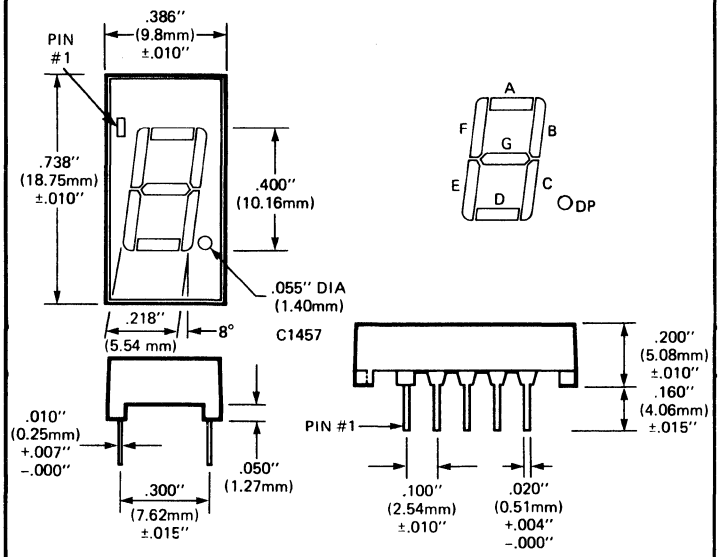

PY1345

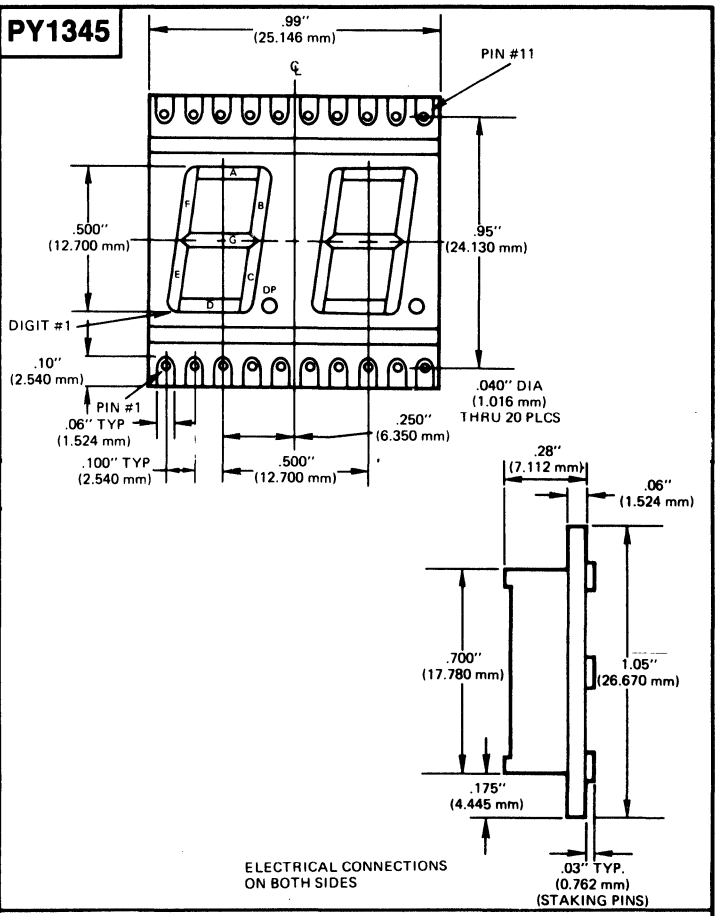

PY1346

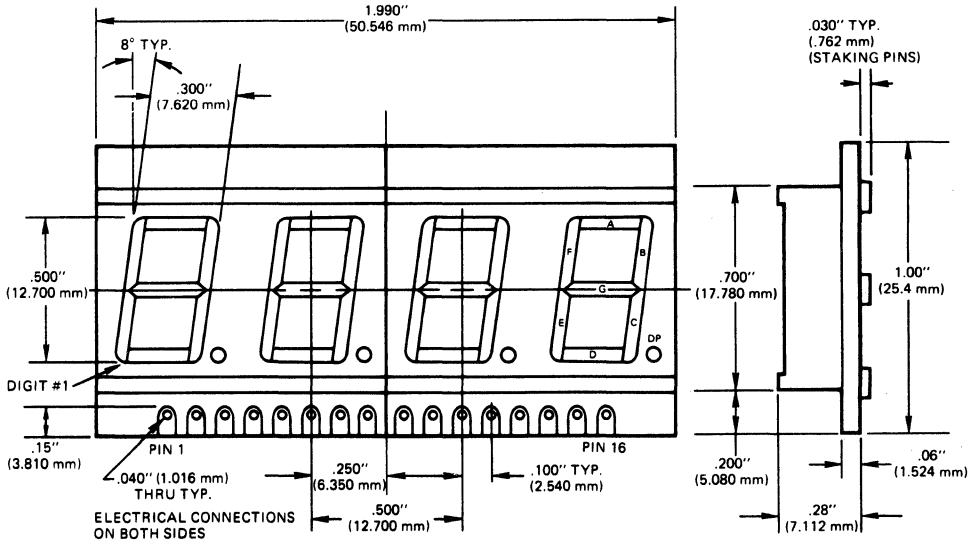

49. OUTLINE DRAWINGS

PY1347

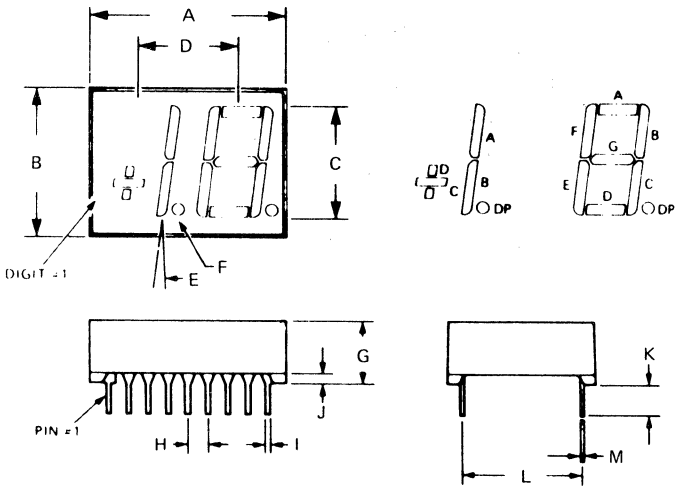

	A	B	C	D	E	F	G	H	I	J	K	L	M
PY1347	.985	.750	.560	.500	8°	.066 DIA	.315	.100	.020	.050	.155	.600	.010
PY1347a	.985	.750	.560	.500	8°	.066 DIA	.315	.100	.020	.050	.160	.600	.010

PY1348

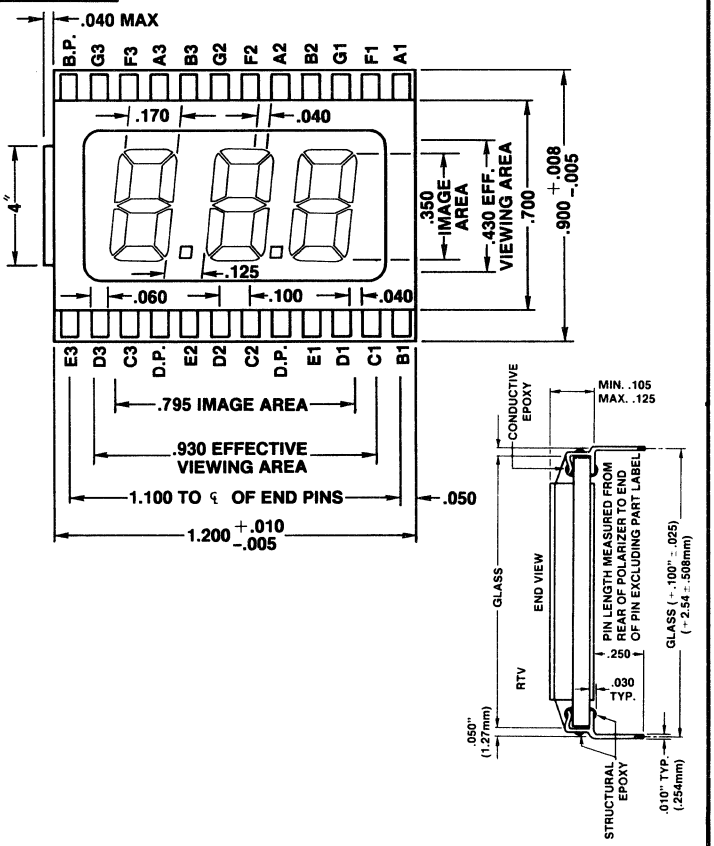

PY1349

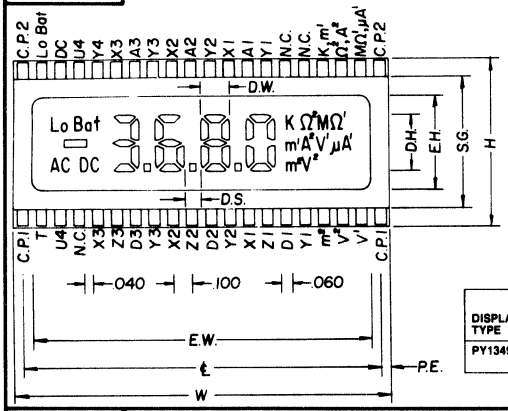

DISPLAY TYPE	W WIDTH	H HEIGHT	EW EFFECTIVE WIDTH	EH EFFECTIVE HEIGHT	DH DIGIT HEIGHT	DW DIGIT WIDTH	DS DIGIT SPACING	SG SMALLER GLASS HEIGHT	PE PIN-ROW LENGTH	PE END-PIN TO GLASS EDGE	SH SYMBOL HEIGHT	DES DESCRIPTOR (IF ANY)
PY1349	2.00 (50.8)	0.90 (22.8)	1.730 (43.9)	0.430 (10.9)	0.300 (7.6)	0.150 (3.8)	0.090 (2.3)	0.70 (17.8)	1.90 (48.2)	0.050 (1.3)	0.08 (2.0)	See Above

PY1350

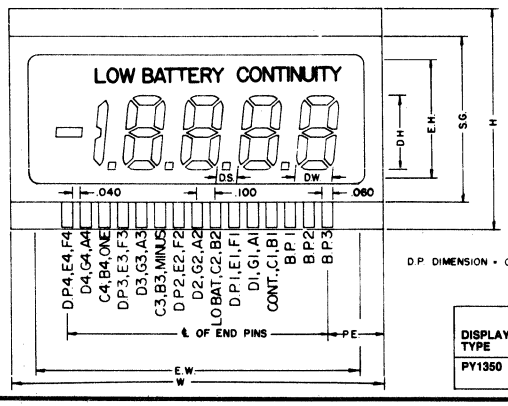

D.P. DIMENSION = .040 X .040

DISPLAY TYPE	W WIDTH	H HEIGHT	EW EFFECTIVE WIDTH	EH EFFECTIVE HEIGHT	DH DIGIT HEIGHT	DW DIGIT WIDTH	DS DIGIT SPACING	SG SMALLER GLASS HEIGHT	SG PIN-ROW LENGTH	PE END-PIN TO GLASS EDGE	SH SYMBOL HEIGHT	DES DESCRIPTOR (IF ANY)
PY1350	2.00 (50.8)	1.20 (30.5)	1.730 (43.9)	0.630 (16.0)	0.400 (10.2)	0.200 (5.1)	0.110 (2.8)	0.90 (22.8)	1.40 (35.6)	0.300 (7.6)	-	-

49. OUTLINE DRAWINGS

PY1352

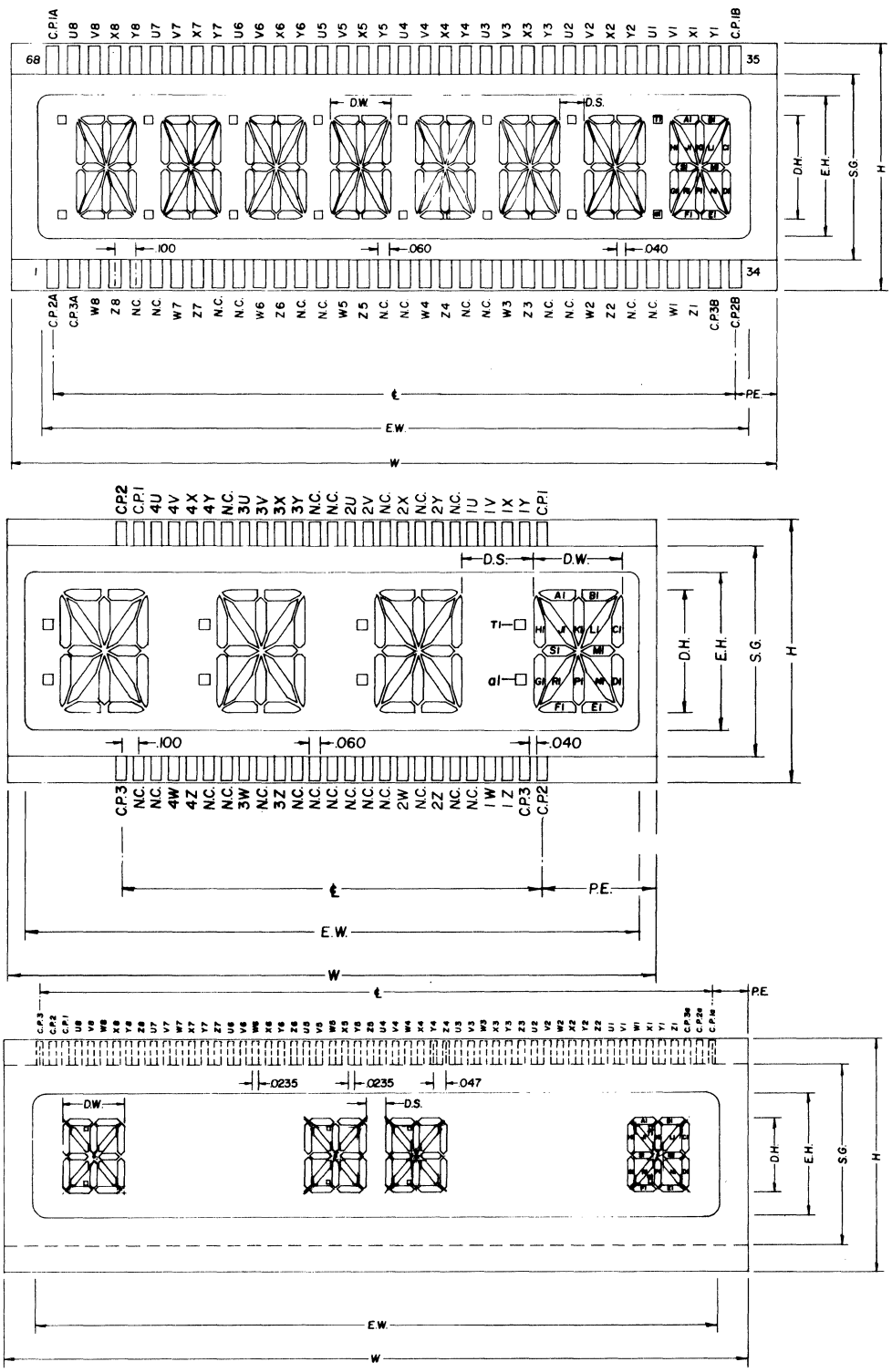

DISPLAY TYPE	W WIDTH	H HEIGHT	EW EFFECTIVE WIDTH	EH EFFECTIVE HEIGHT	DH DIGIT HEIGHT	DW DIGIT WIDTH	DS DIGIT SPACING	SG SMALLER GLASS HEIGHT	℄ PIN-ROW LENGTH	PE END-PIN TO GLASS EDGE
PY1352	3.70 (93.9)	1.20 (30.5)	3.380 (85.8)	0.630 (16.0)	0.500 (12.7)	0.290 (7.4)	0.120 (3.0)	0.90 (22.8)	3.30 (83.8)	0.200 (5.1)
PY1352a	3.70 (93.9)	1.50 (38.1)	3.425 (87.0)	0.830 (21.1)	0.700 (17.8)	0.500 (12.7)	0.398 (10.1)	1.20 (30.5)	2.40 (60.9)	0.648 (16.4)
PY1352b	2.76 (69.9)	0.87 (22.1)	2.486 (63.1)	0.399 (10.1)	0.275 (7.0)	0.228 (5.8)	0.071 (1.8)	0.669 (17.0)	2.49 (63.2)	0.133 (3.3)

[NOMINAL DIMENSIONS IN INCHES (millimeters)]
NOTE: "EW" (Effective Width) and "EH" (Effective Height) are bezel opening dimensions

49. OUTLINE DRAWINGS

PY1351

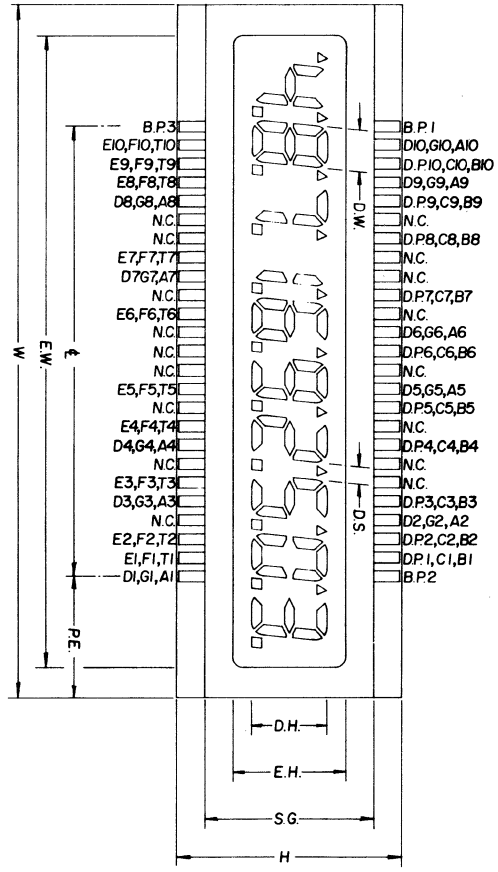

PY1351

DISPLAY TYPE	W WIDTH	H HEIGHT	EW EFFECTIVE WIDTH	EH EFFECTIVE HEIGHT	DH DIGIT HEIGHT	DW DIGIT WIDTH	DS DIGIT SPACING	SG SMALLER GLASS HEIGHT	PE PIN-ROW LENGTH	PE END-PIN TO GLASS EDGE	SH SYMBOL HEIGHT	DES DESCRIPTOR (IF ANY)
PY1351	3.70 (93.9)	1.20 (30.5)	3.305 (83.9)	0.530 (13.5)	0.400 (10.2)	0.200 (5.1)	0.115 (2.9)	0.90 (22.9)	2.40 (60.9)	0.648 (16.4)	-	-

PY1353

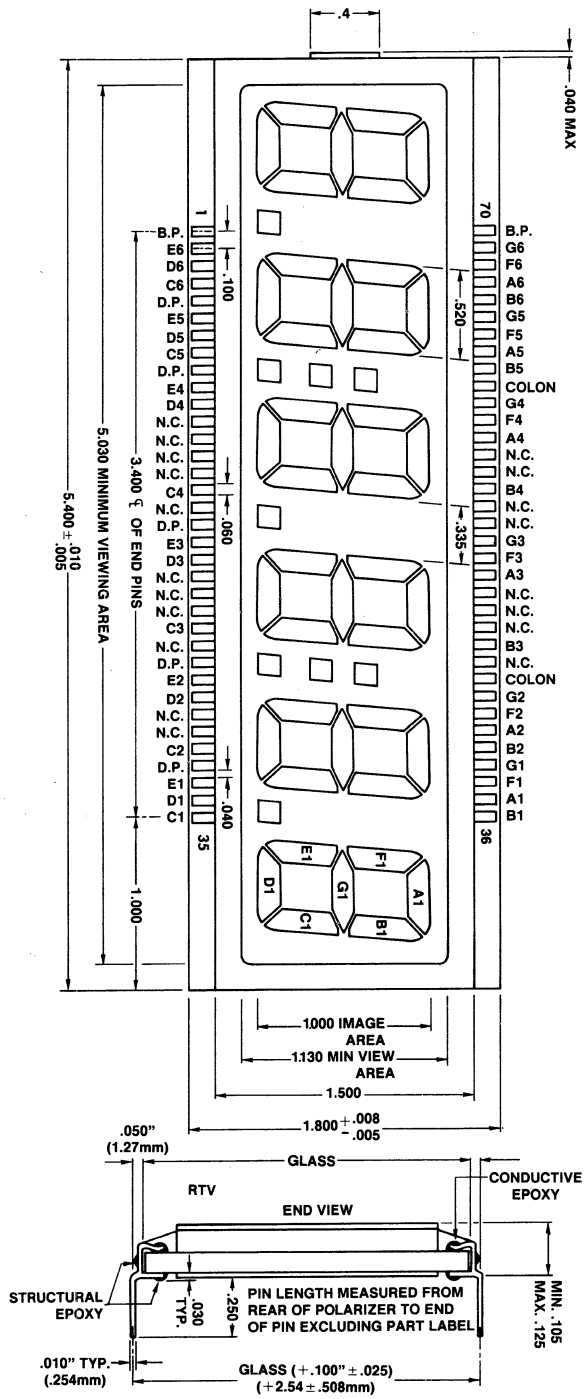

49. OUTLINE DRAWINGS

PY1354

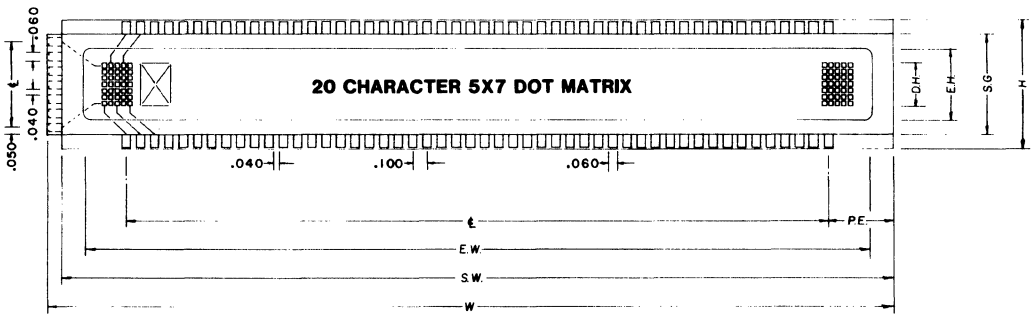

DISPLAY TYPE	W WIDTH	H HEIGHT	EW EFFECTIVE WIDTH	EH EFFECTIVE HEIGHT	DH DIGIT HEIGHT	DW DIGIT WIDTH	DS DIGIT SPACING	SG SMALLER GLASS HEIGHT	PIN-ROW LENGTH	PE END-PIN TO GLASS EDGE	SW SMALLER GLASS WIDTH
PY1354	5.90 (149.9)	0.90 (22.8)	5.430 (137.9)	0.430 (10.9)	0.300 (7.6)	-	-	0.70 (17.8)	4.90 (124.5)	0.450 (11.4)	5.80 (147.3)

PY1355

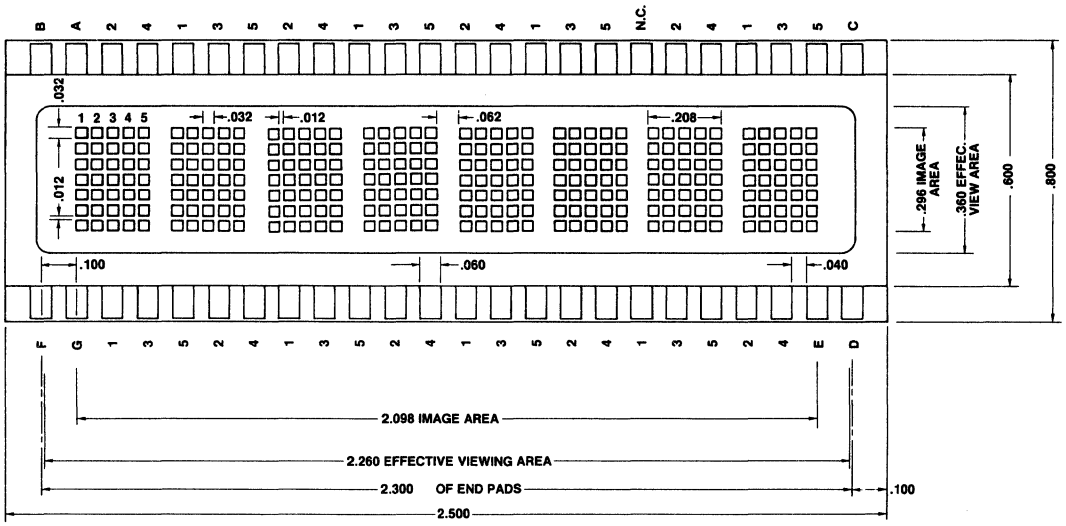

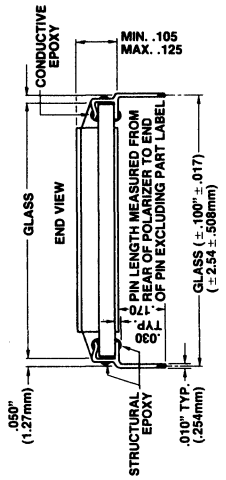

49. OUTLINE DRAWINGS

PY1356

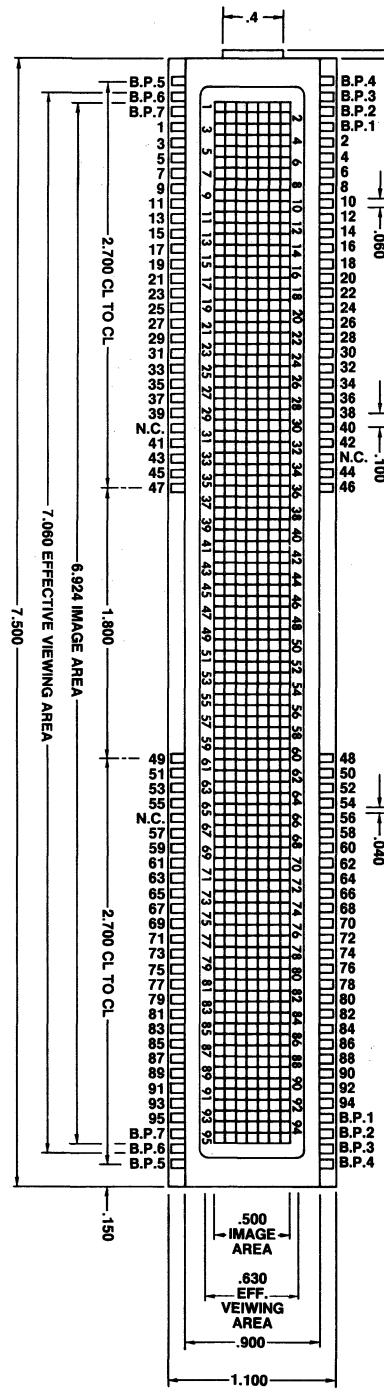

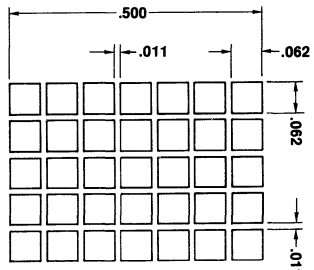

TYPICAL DOT SIZE AND SPACES
5 X 1 SCALE
(CONTINUOUS MATRIX WITH 95 COLUMNS)

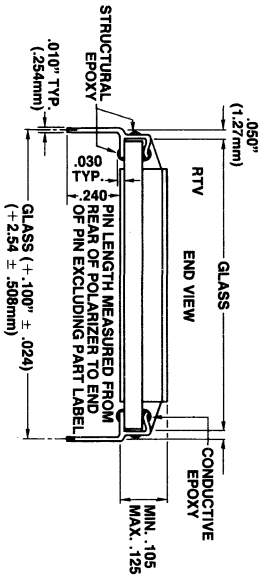

PY1357

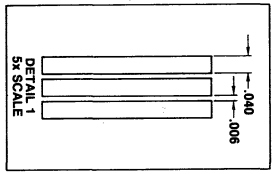

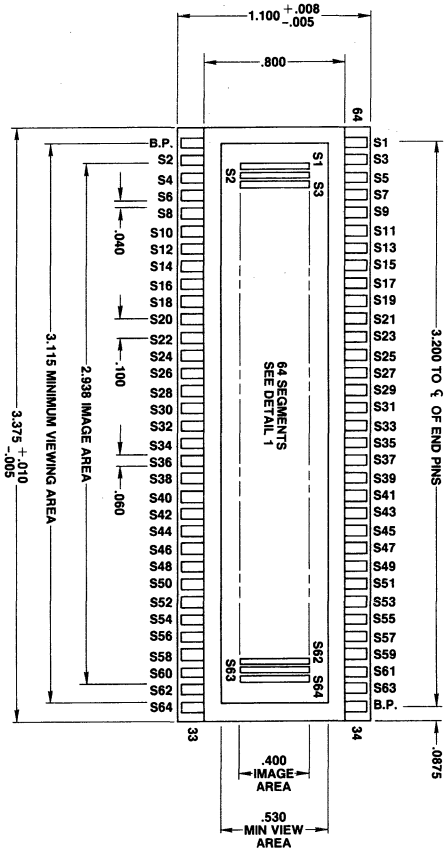

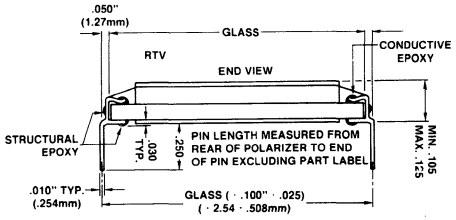

49. OUTLINE DRAWINGS

PY1358

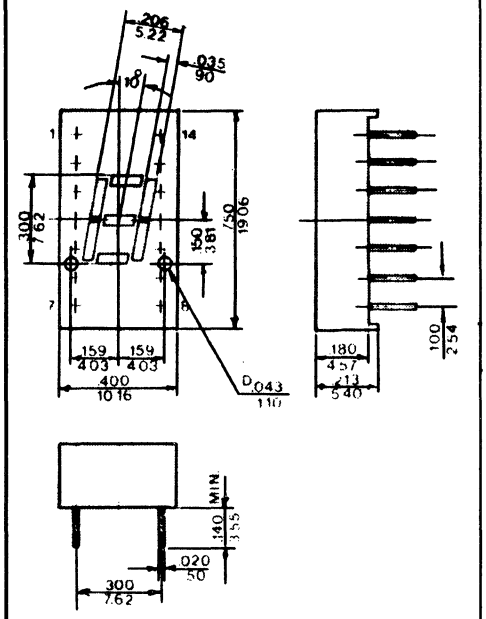

PY1359

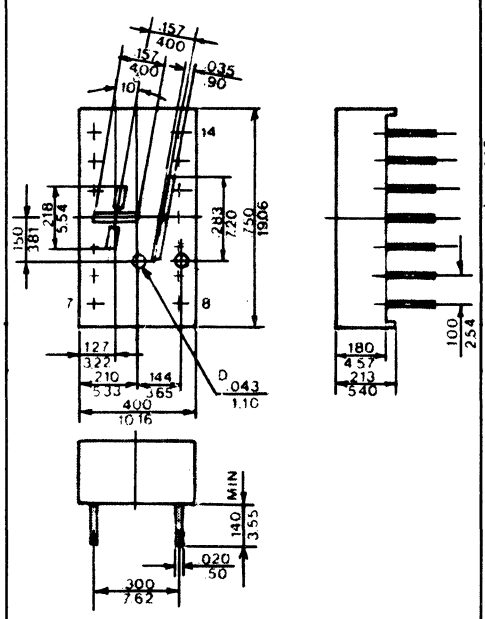

PY1360

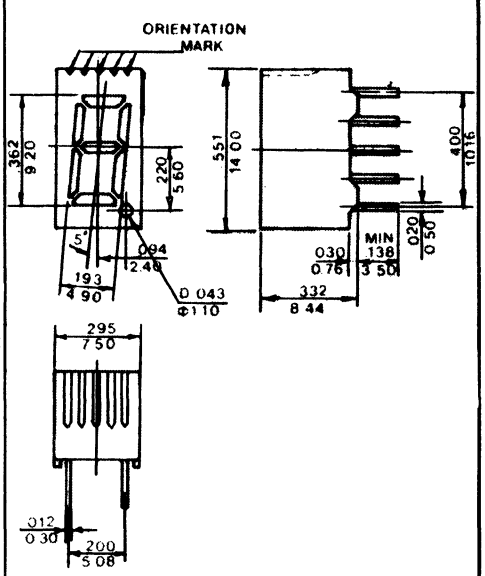

PY1361

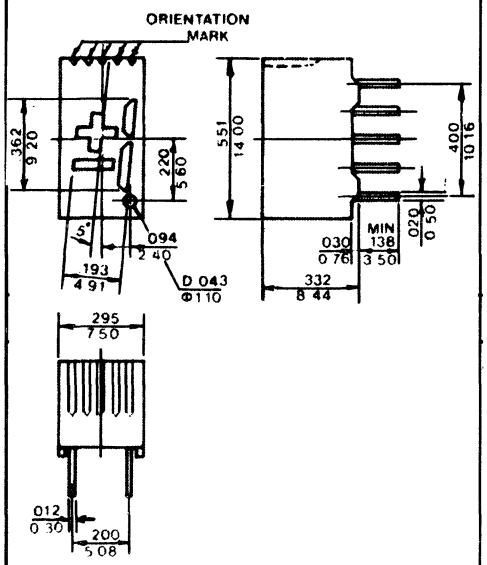

PY1362

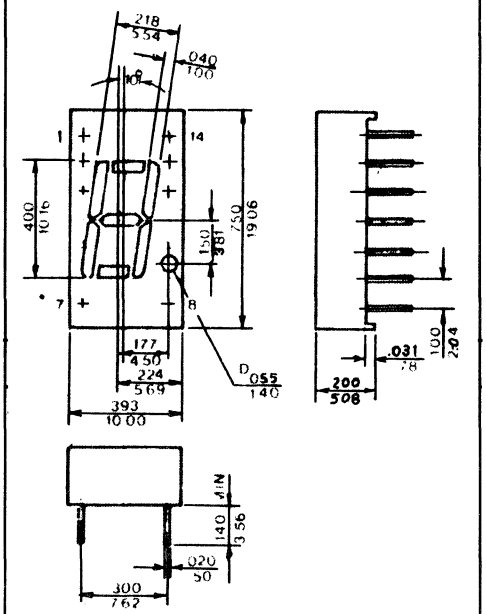

PY1363

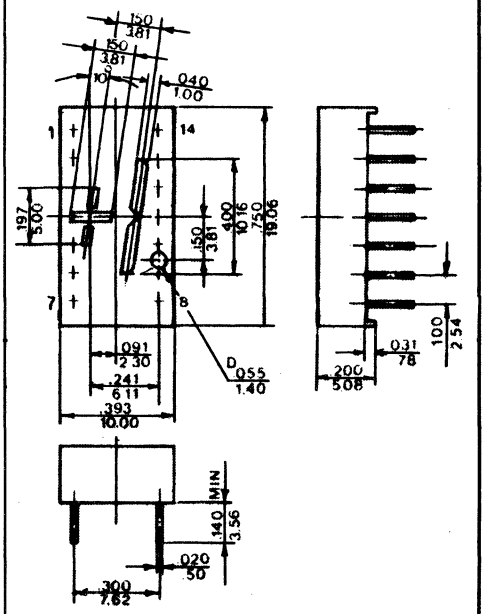

49. OUTLINE DRAWINGS

PY1364

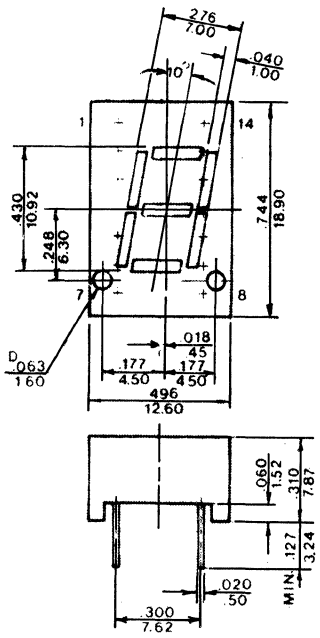

PY1381

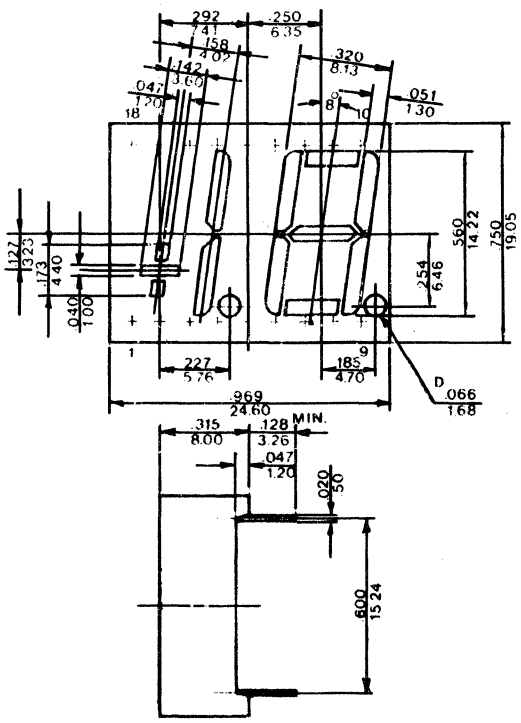

PY1366

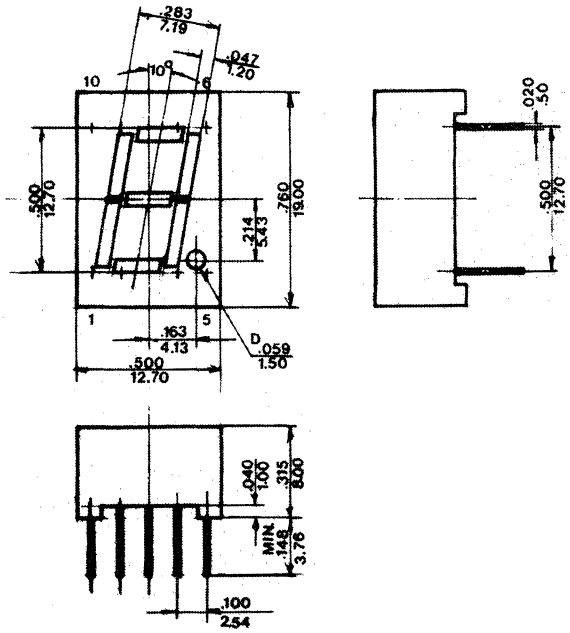

PY1367

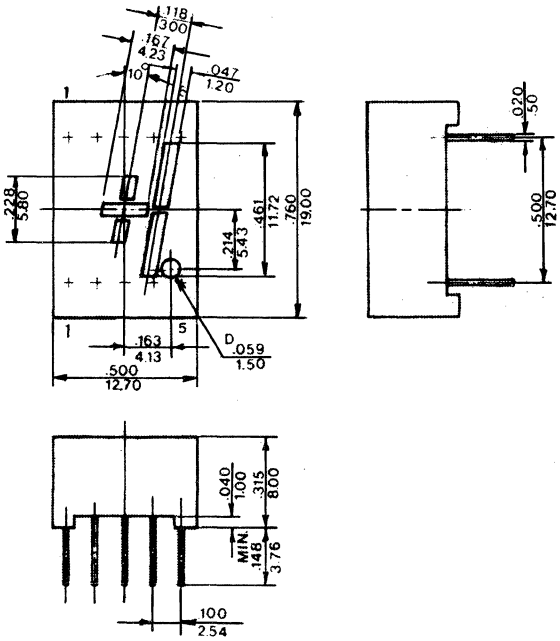

49. OUTLINE DRAWINGS

PY1368

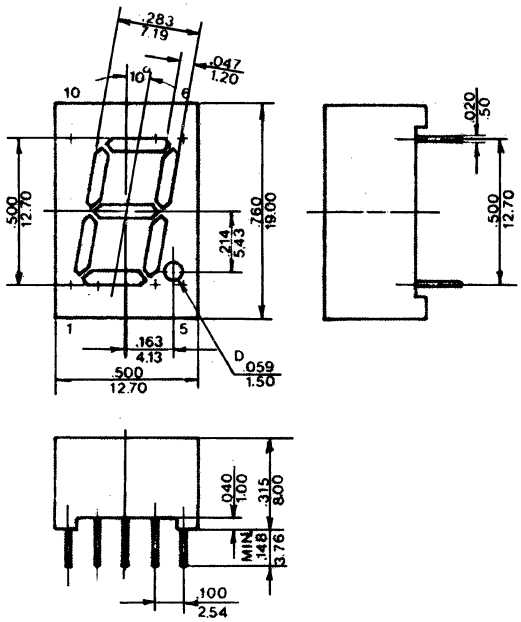

PY1369

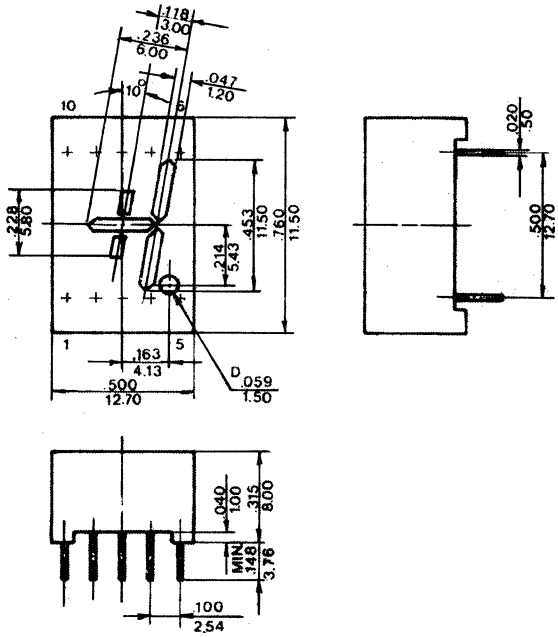

PY1370

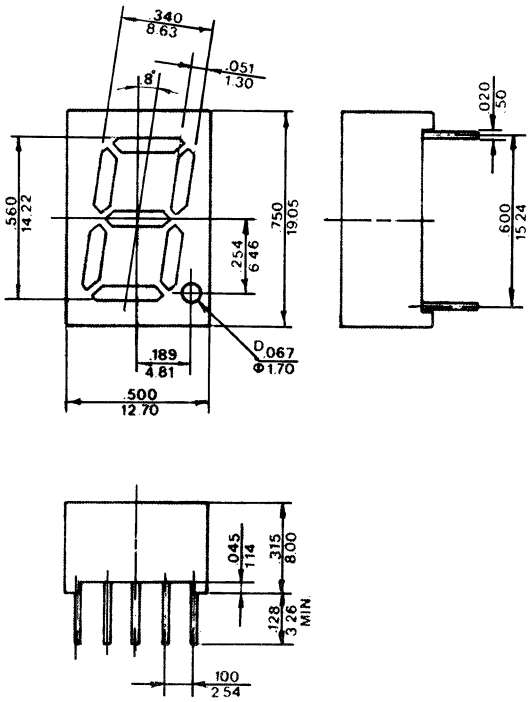

PY1371

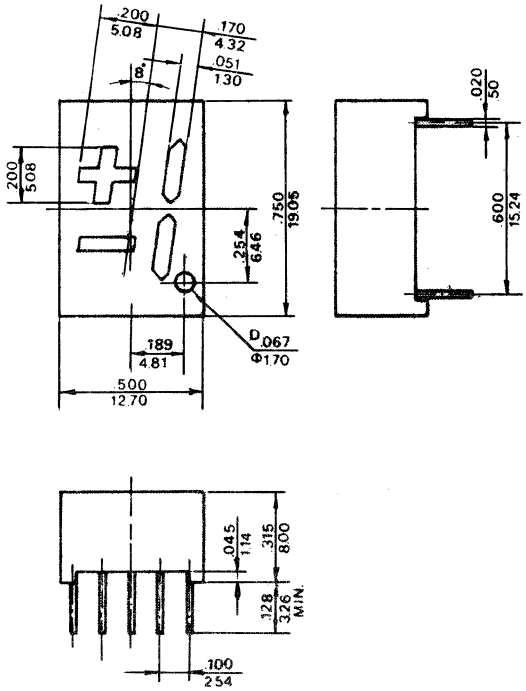

49. OUTLINE DRAWINGS

PY1372

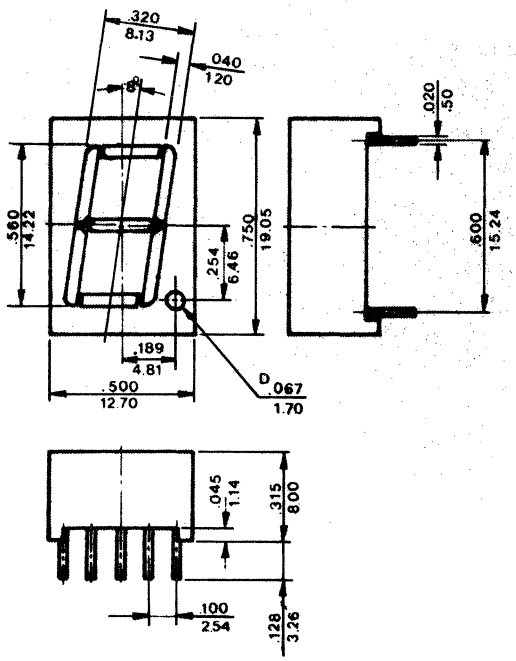

PY1373 **PY1373a**

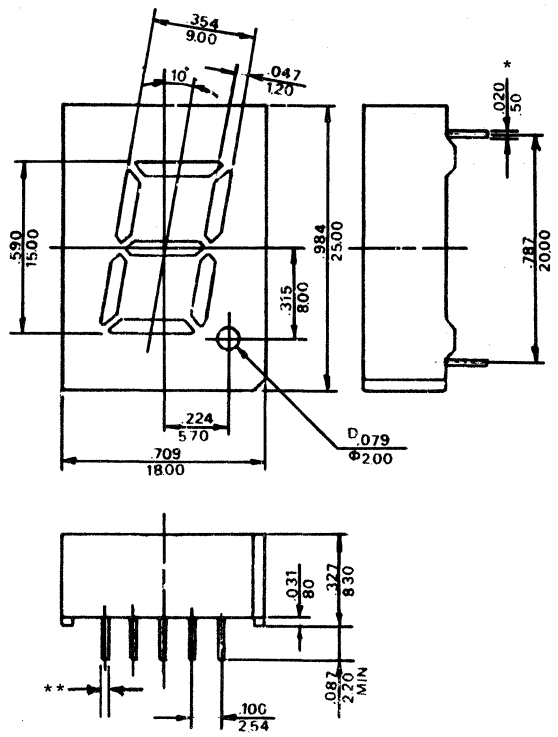

PY1373a only: * 0.25mm
** 0.5mm

PY1374

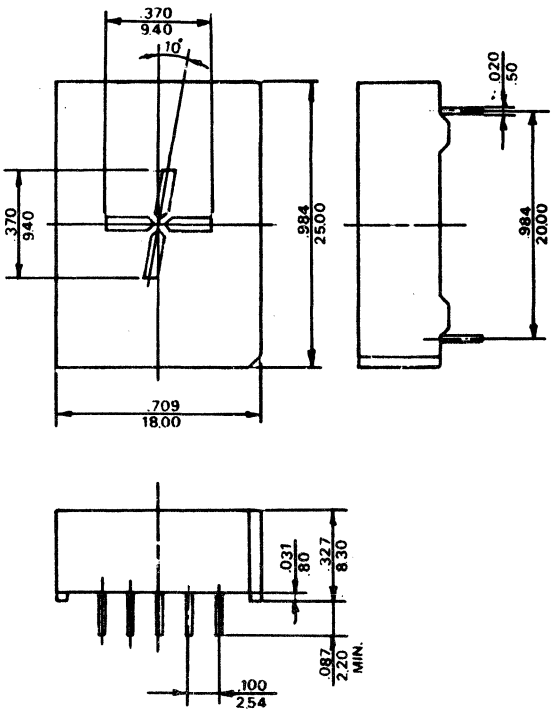

PY1375

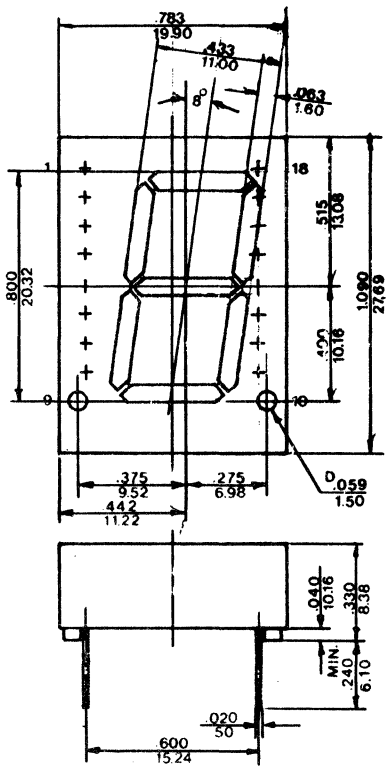

49. OUTLINE DRAWINGS

PY1376

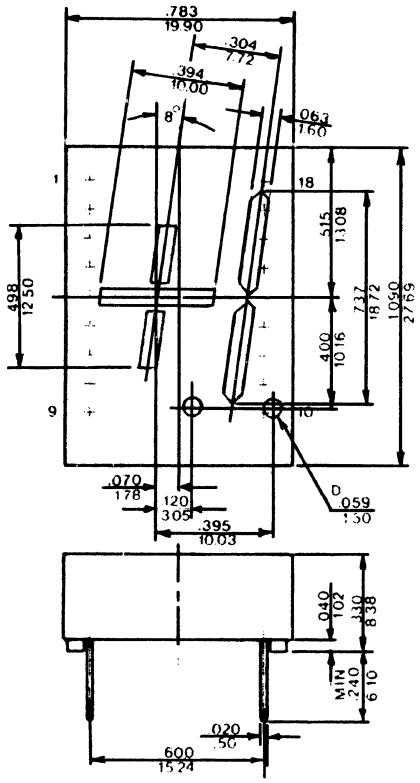

PY1377

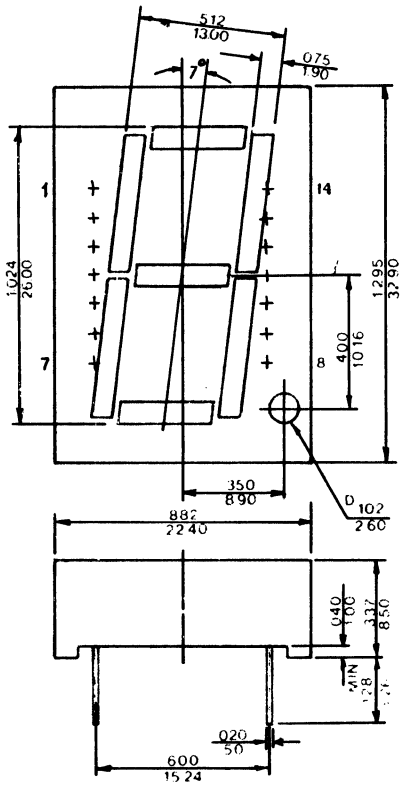

PY1378

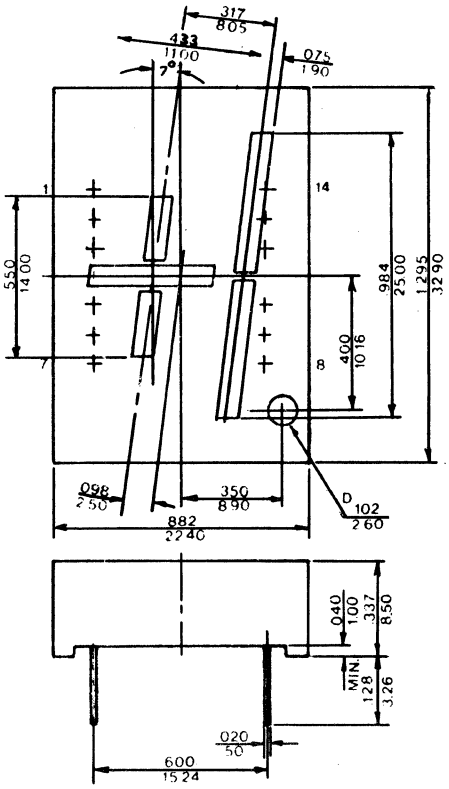

PY1379

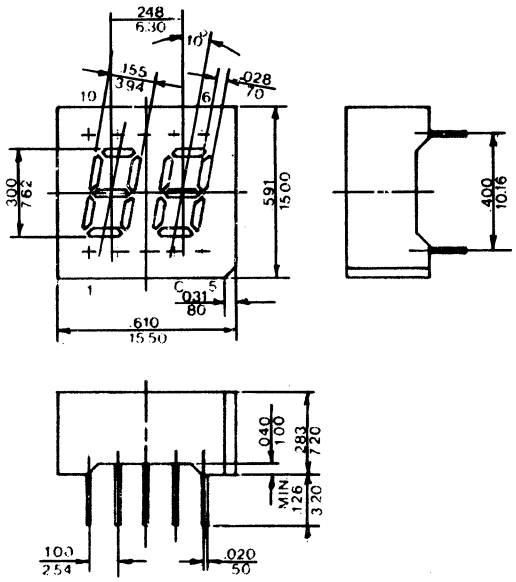

49. OUTLINE DRAWINGS

PY1382

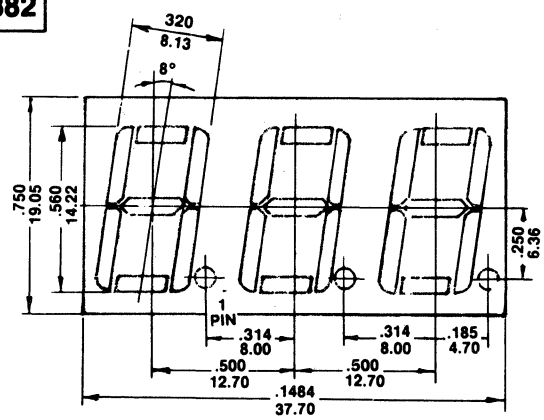

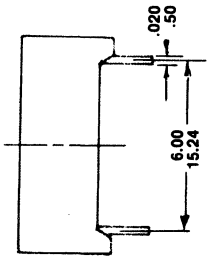

PY1383

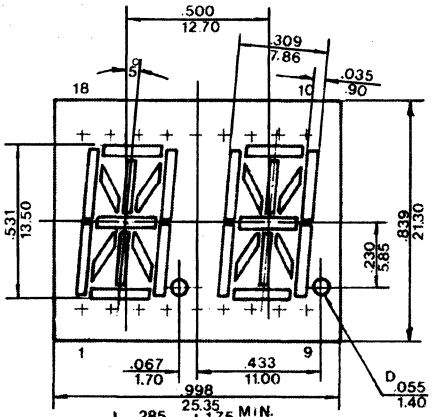

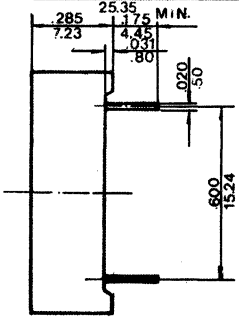

PY1384

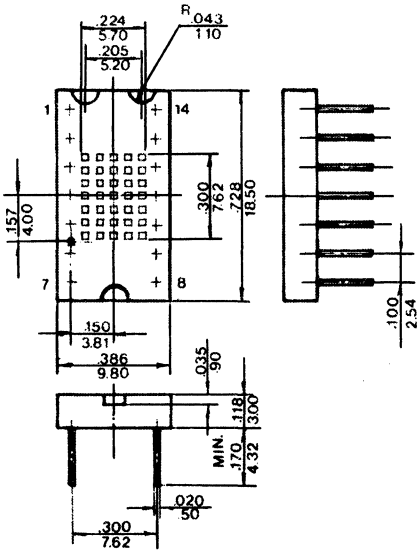

	A	B	C	D	E	F	G	H	I	J	K	L	M
PY1384	.224	.205	.728	.300	.386	.150	.157	.035	.118	.170	.020	.300	.100
PY1384a		.200	.728	.300	.386				.120	.175	.012	.300	.100

PY1385

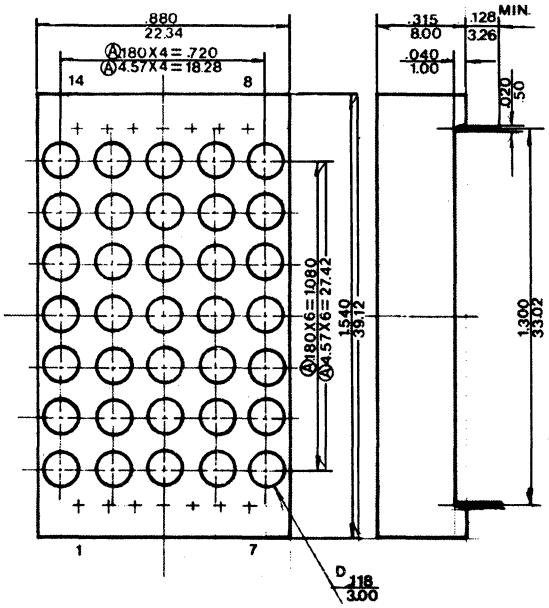

49. OUTLINE DRAWINGS

PY1386

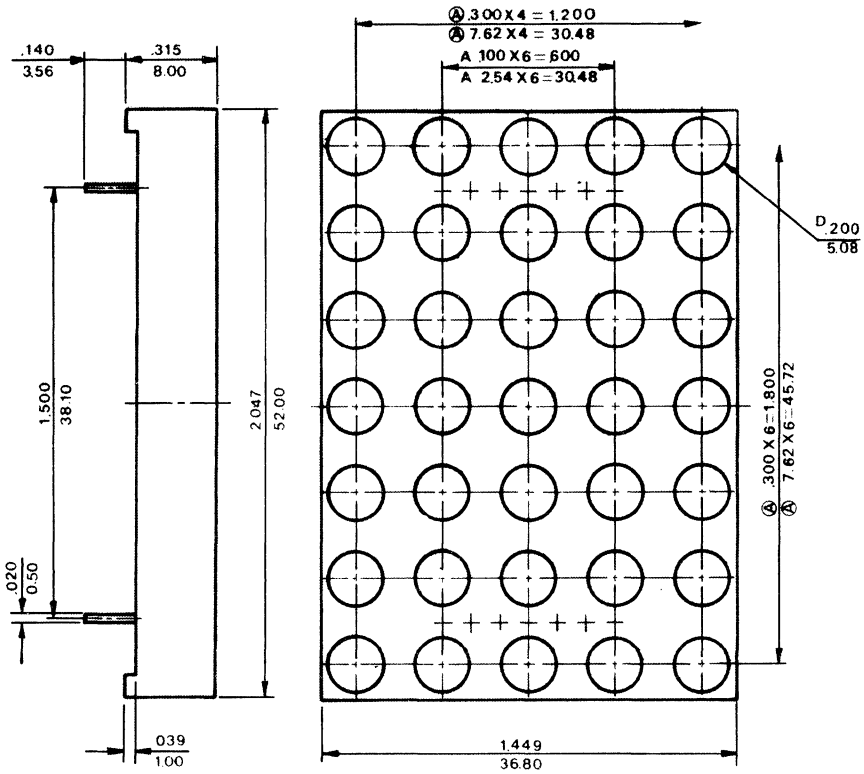

PY1380

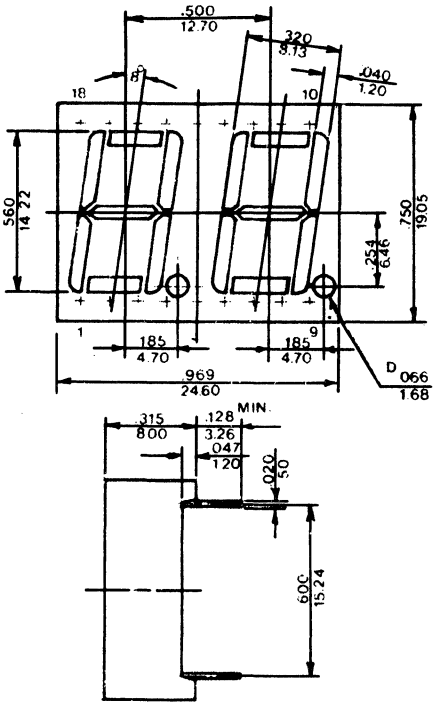

PY1387

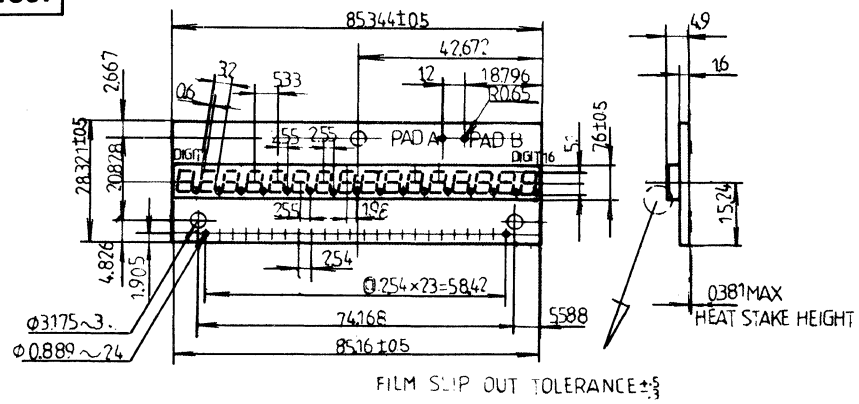

PY1388

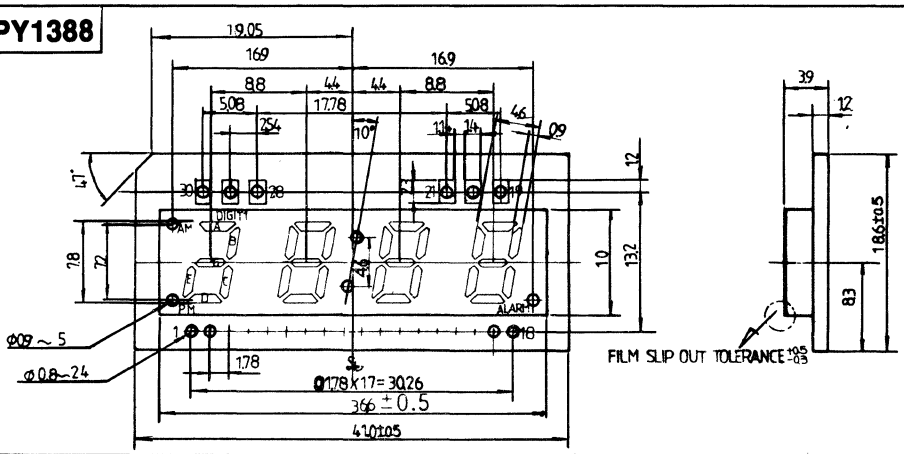

PY1365

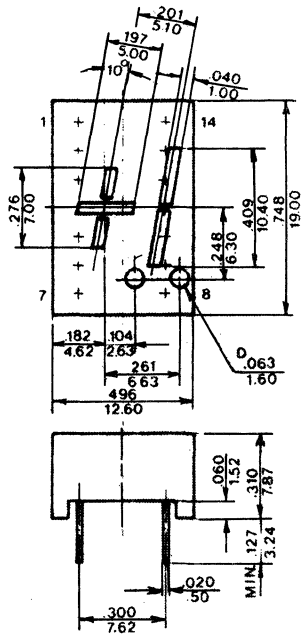

49. OUTLINE DRAWINGS

PY1389

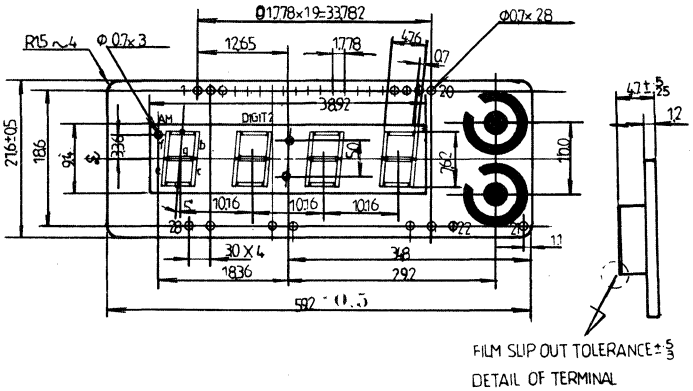

PY1390

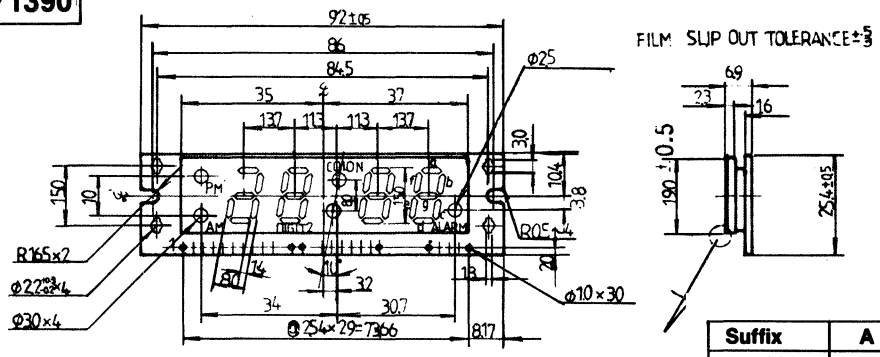

Suffix	A
PY1390	6.9
PY1390a	5.8

PY1391

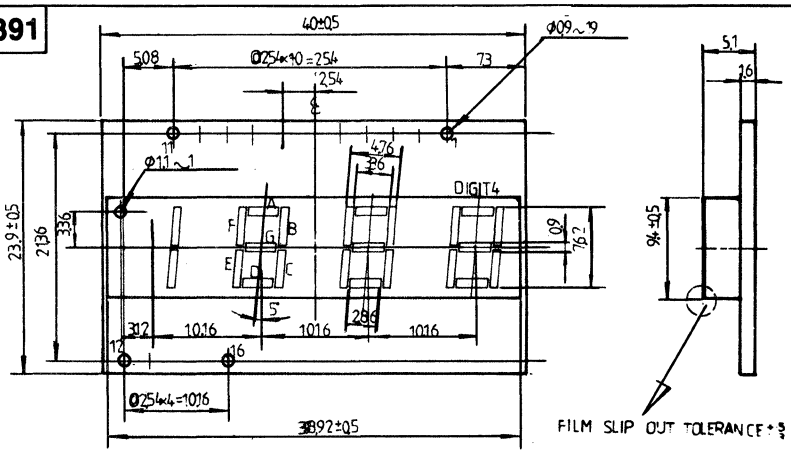

PY1393

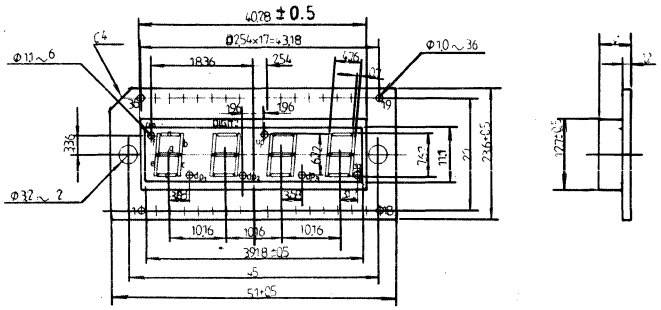

49. OUTLINE DRAWINGS

PY1392

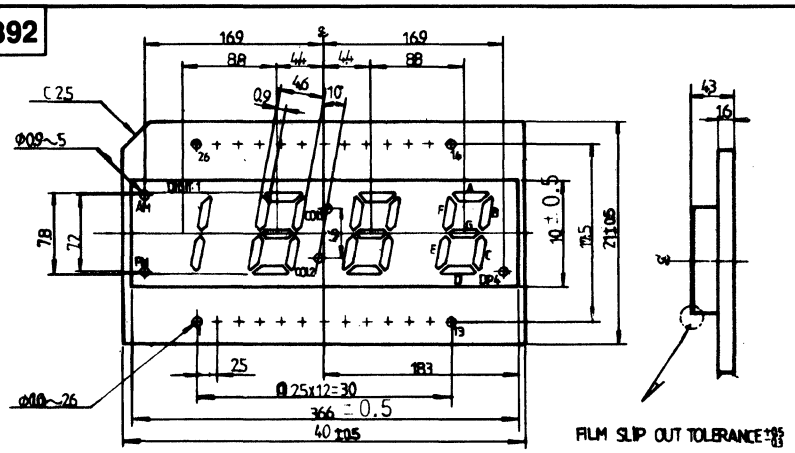

PY1394

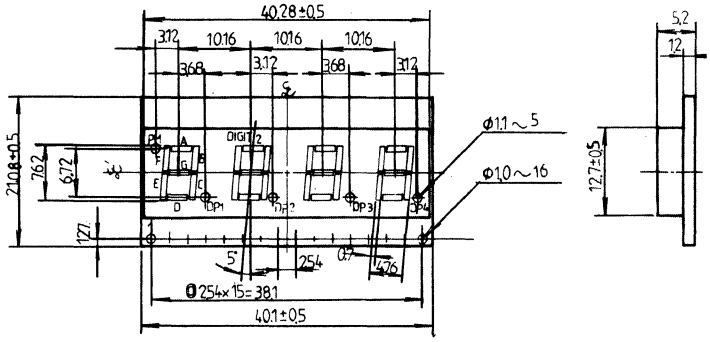

PY1395

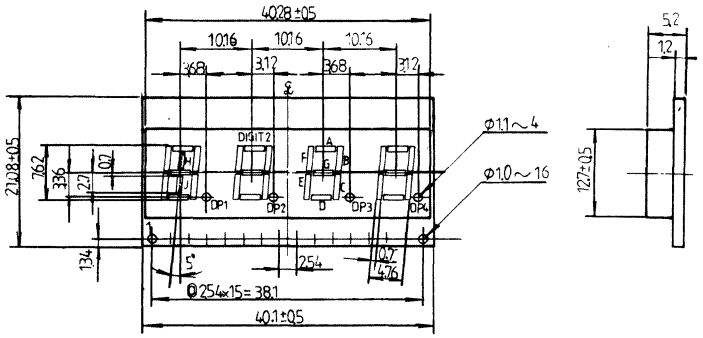

PY1396

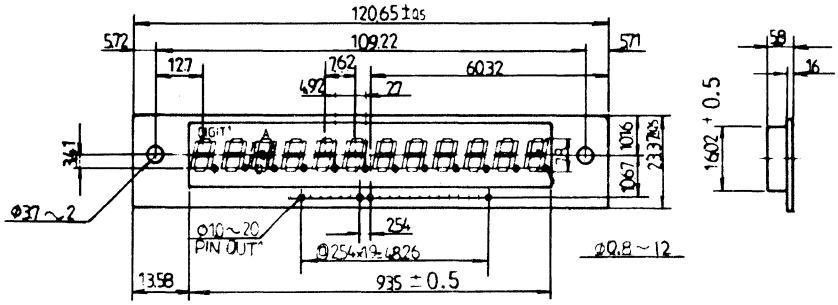

49. OUTLINE DRAWINGS

PY1397

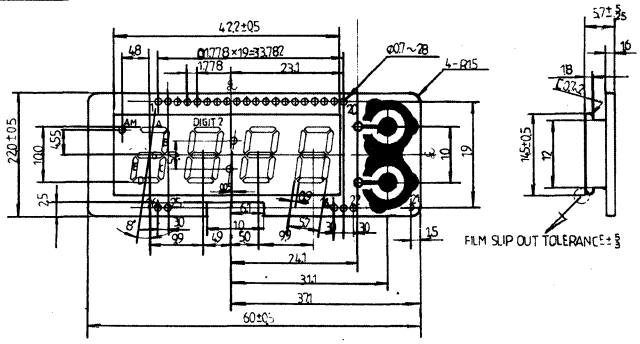

PY1398

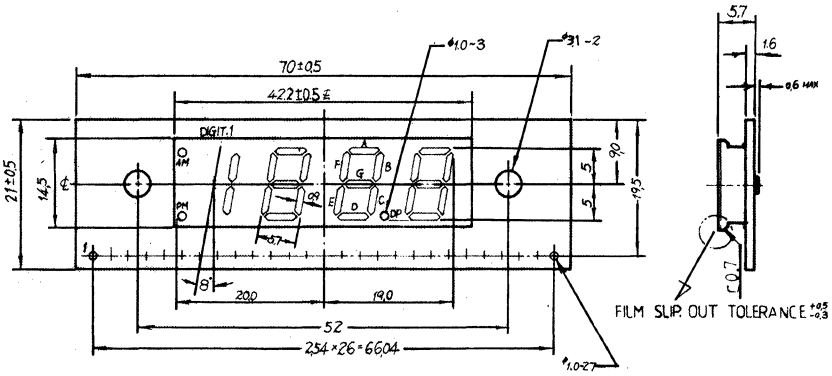

PY1399

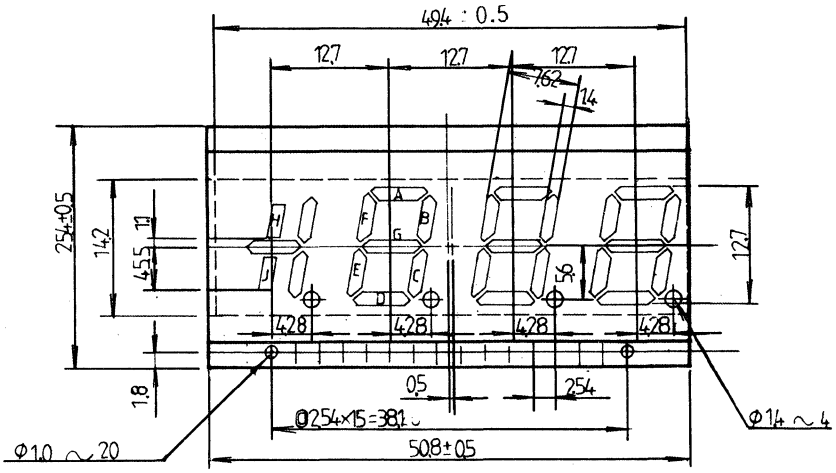

49. OUTLINE DRAWINGS

PY1400

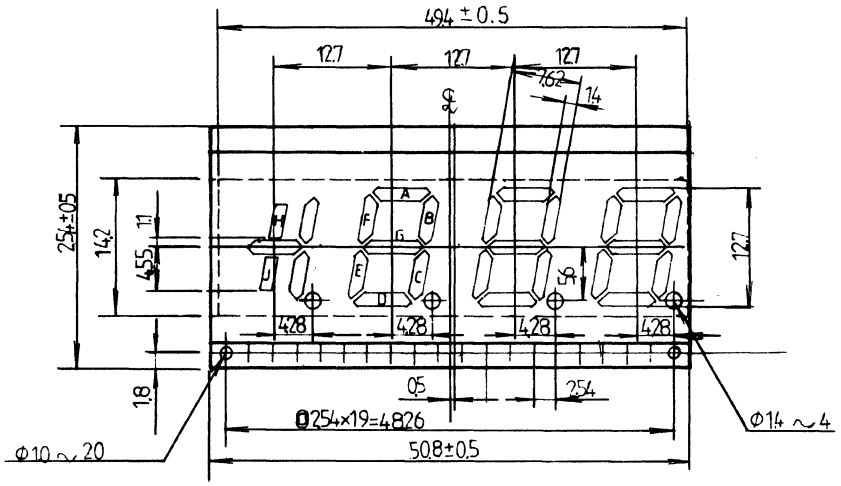

PY1401

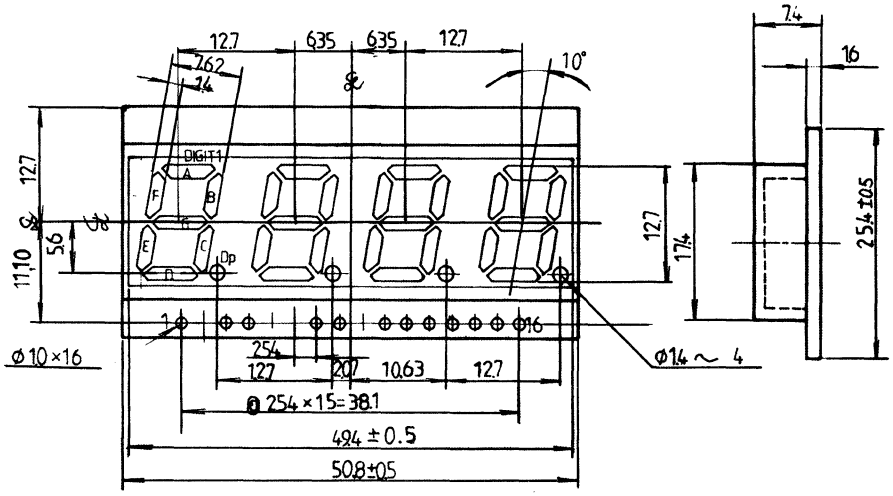

49. OUTLINE DRAWINGS

PY1402

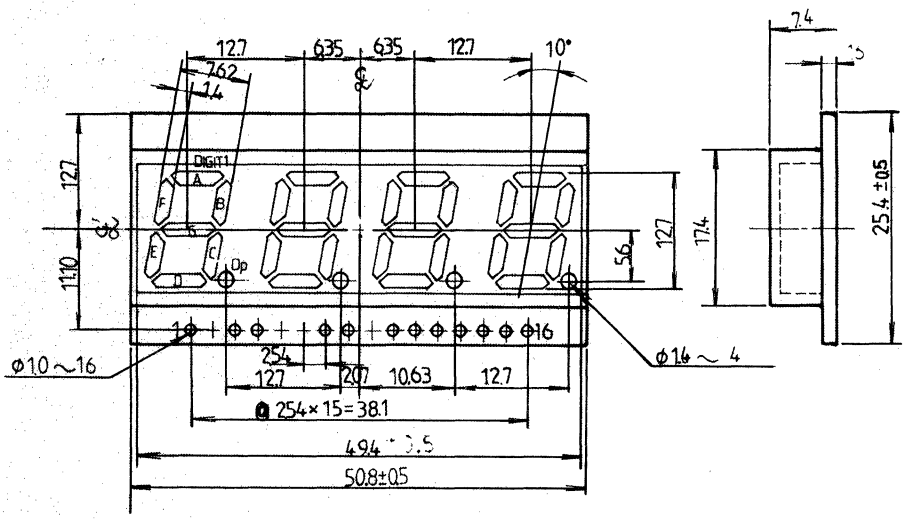

PY1403

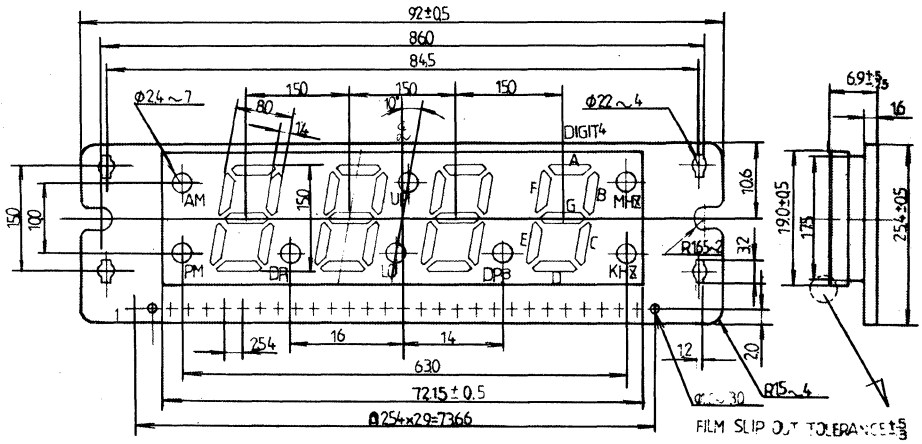

Suffix	A
PY1403	6.9
PY1403a	5.9

49. OUTLINE DRAWINGS

PY1404

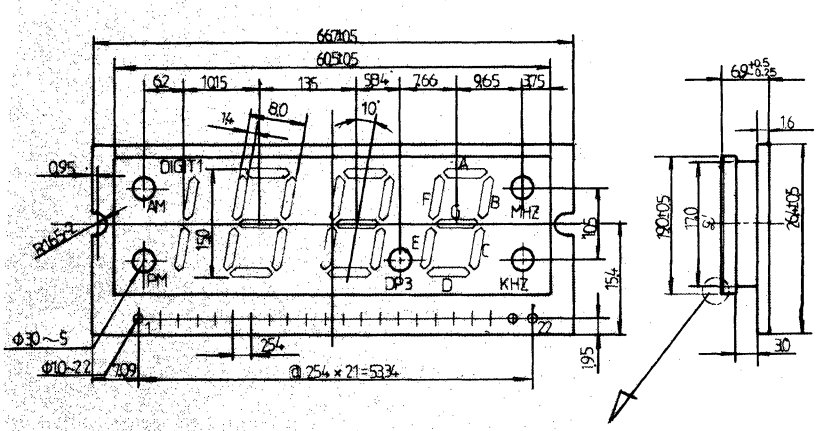

PY1405

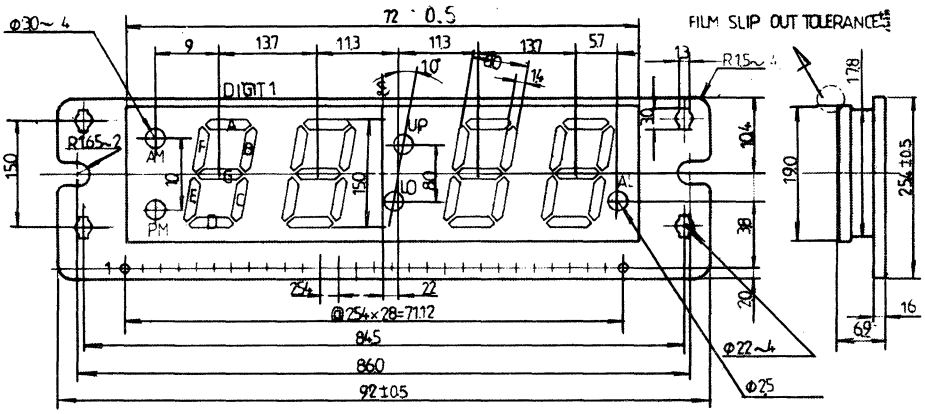

Suffix	A
PY1405	6.9
PY1405a	5.8

49. OUTLINE DRAWINGS

PY1406

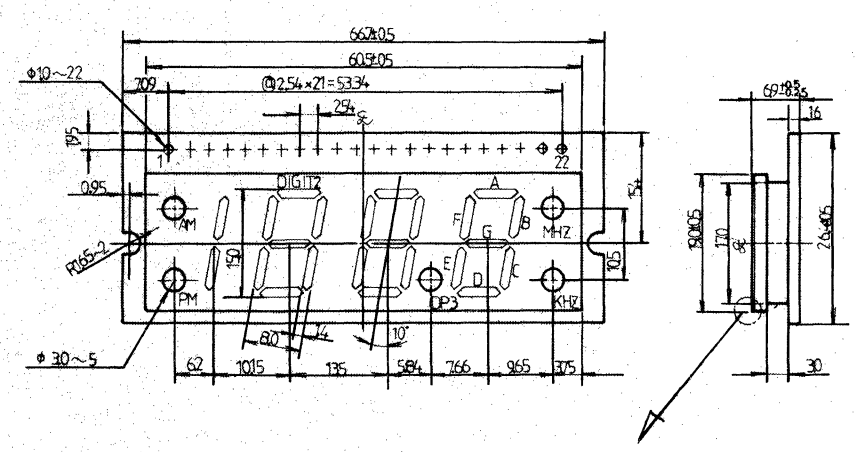

PY1407

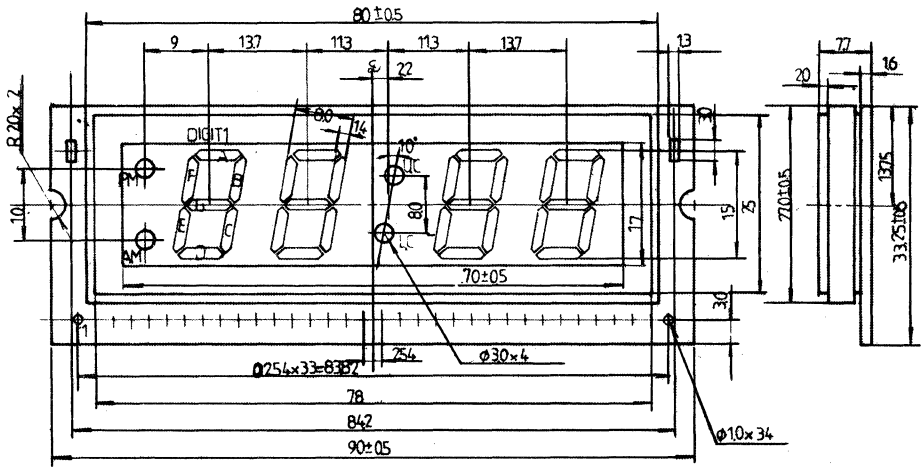

49. OUTLINE DRAWINGS

PY1408

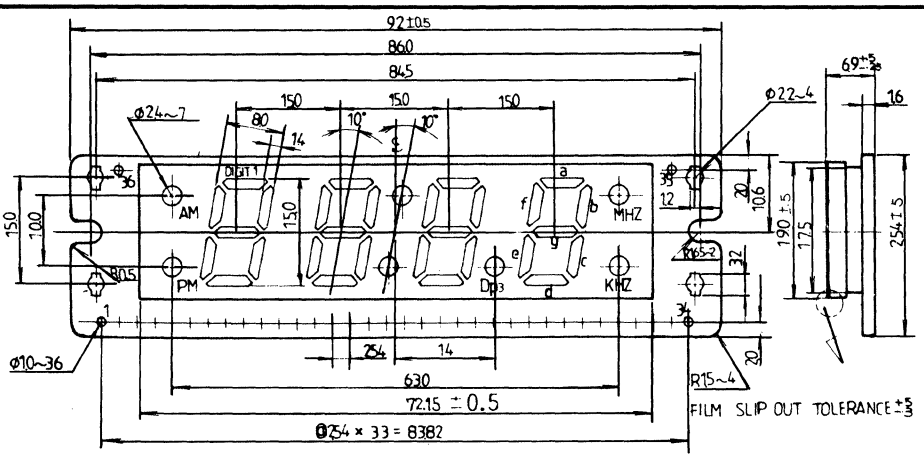

	A
PY1408	6.9
PY1408a	5.8
PY1408b	5.9

PY1409

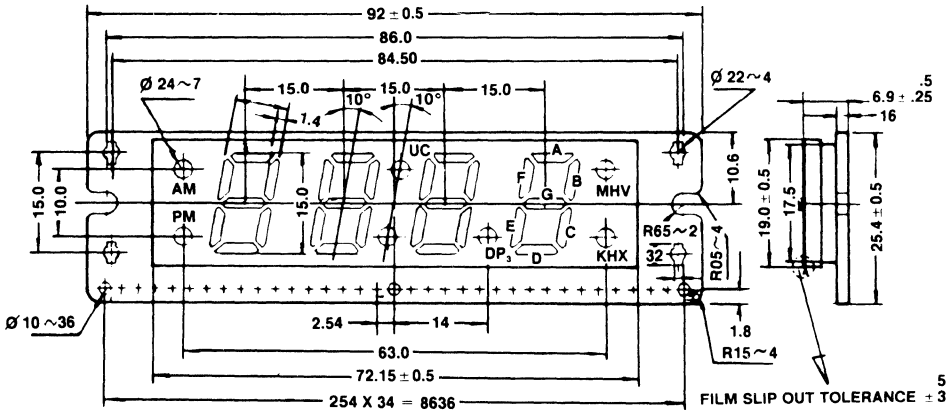

PY1410

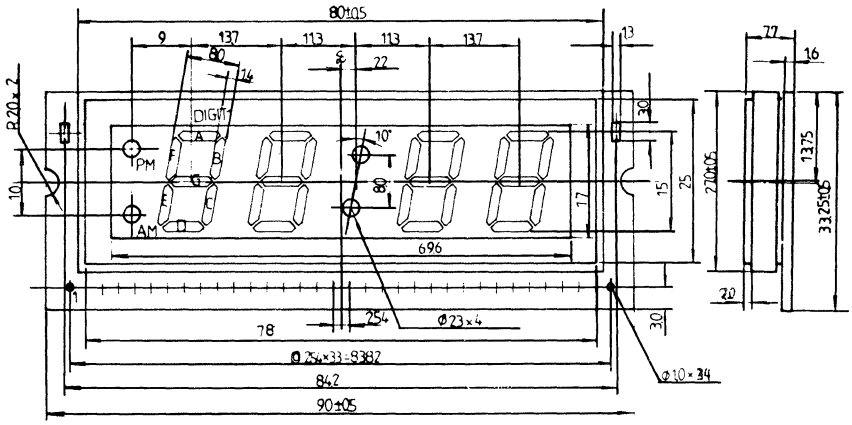

PY1411

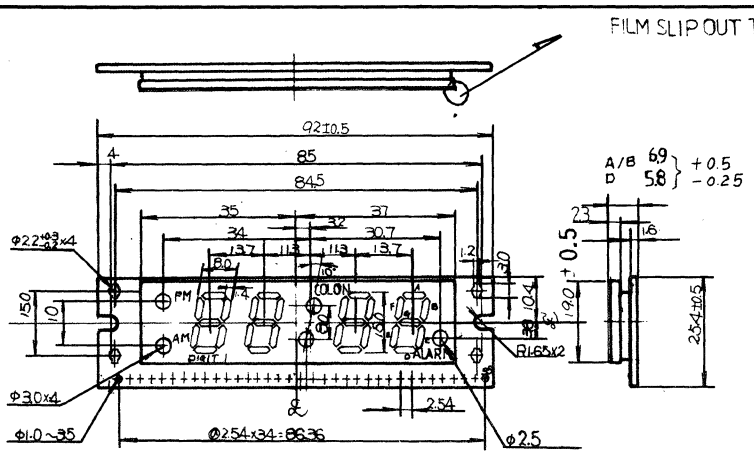

49. OUTLINE DRAWINGS

PY1412

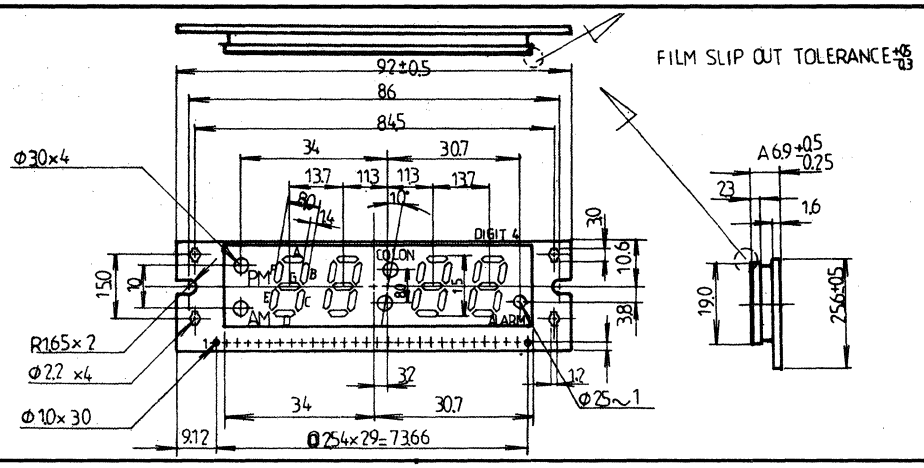

PY1413

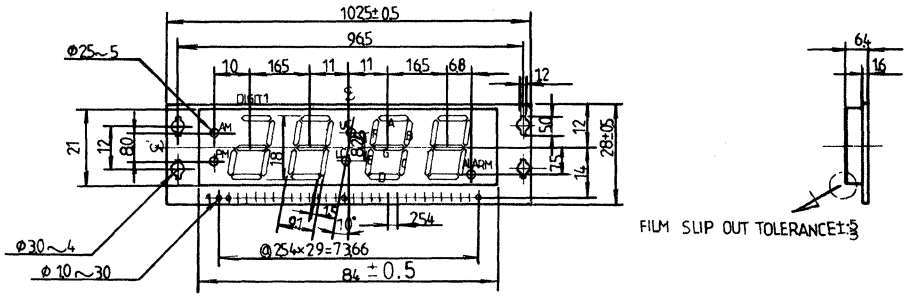

PY1414

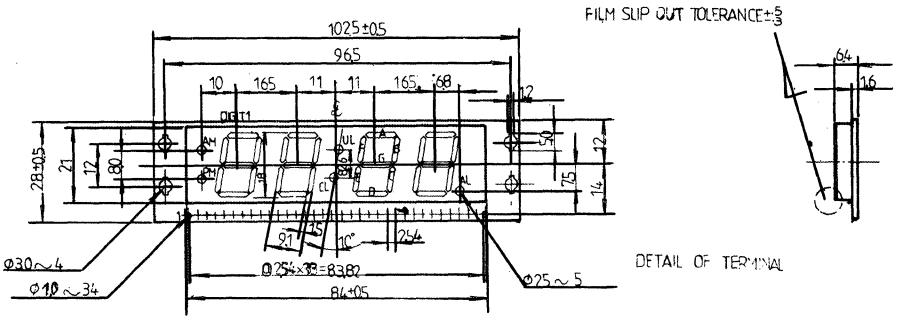

PY1415

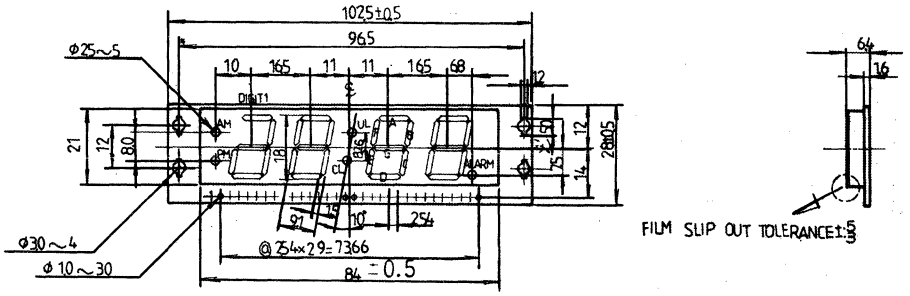

49. OUTLINE DRAWINGS

PY1416

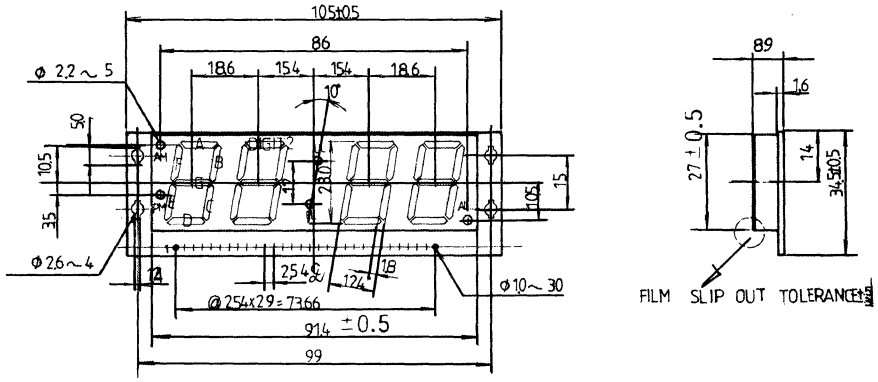

PY1417

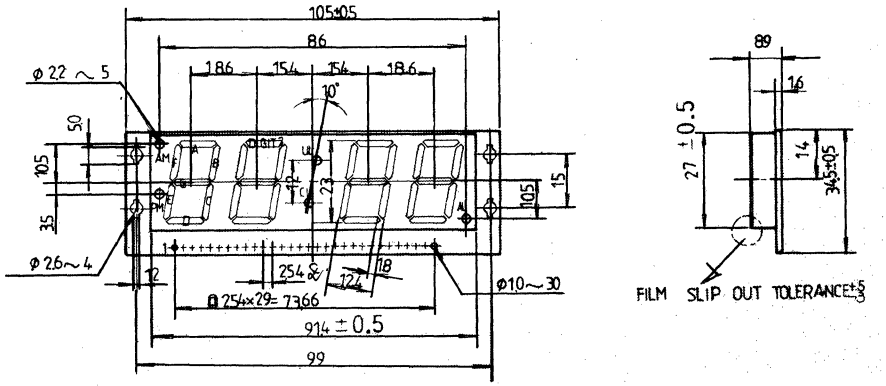

PY1418

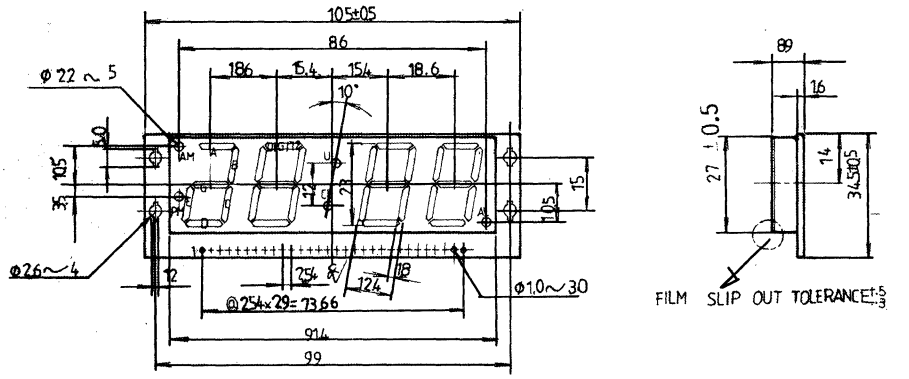

PY1419

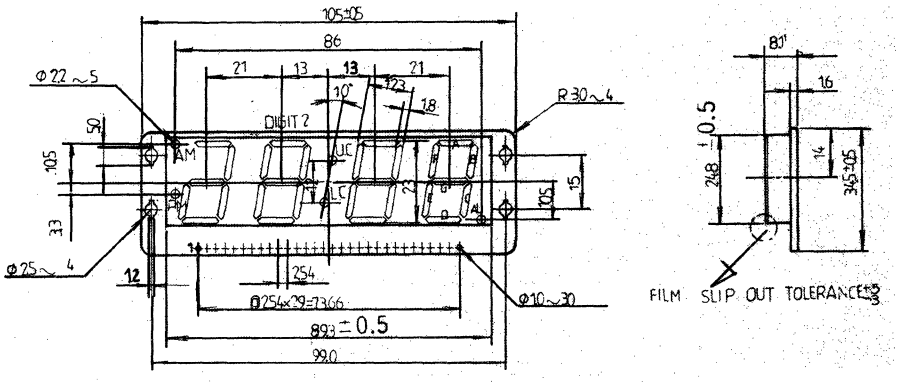

49. OUTLINE DRAWINGS

PY1420

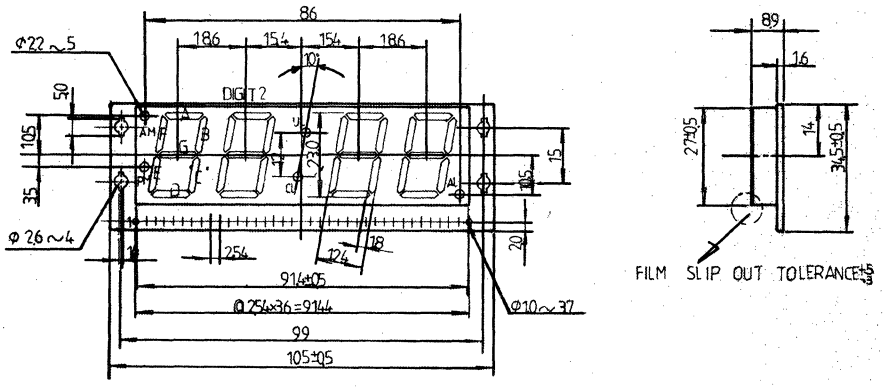

PY1421

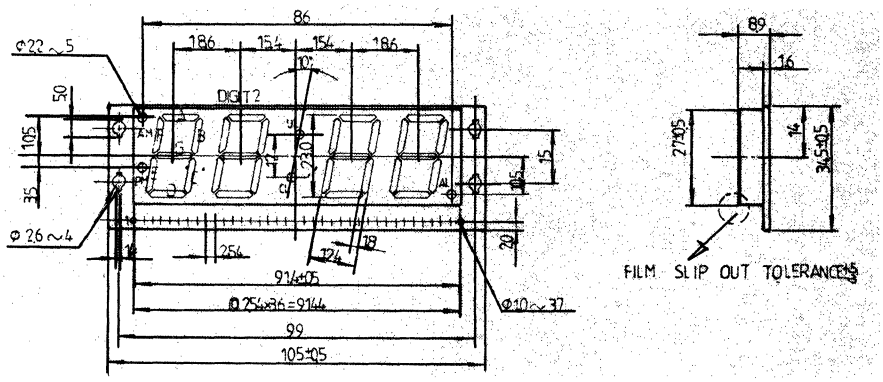

PY1422

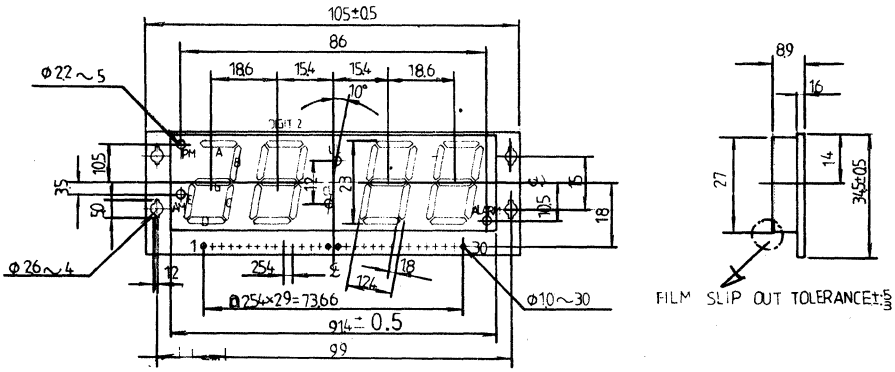

PY1423

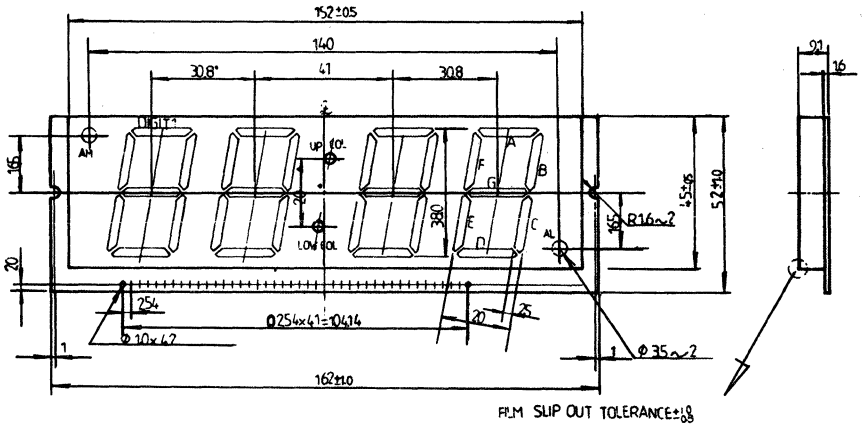

49. OUTLINE DRAWINGS

PY1424

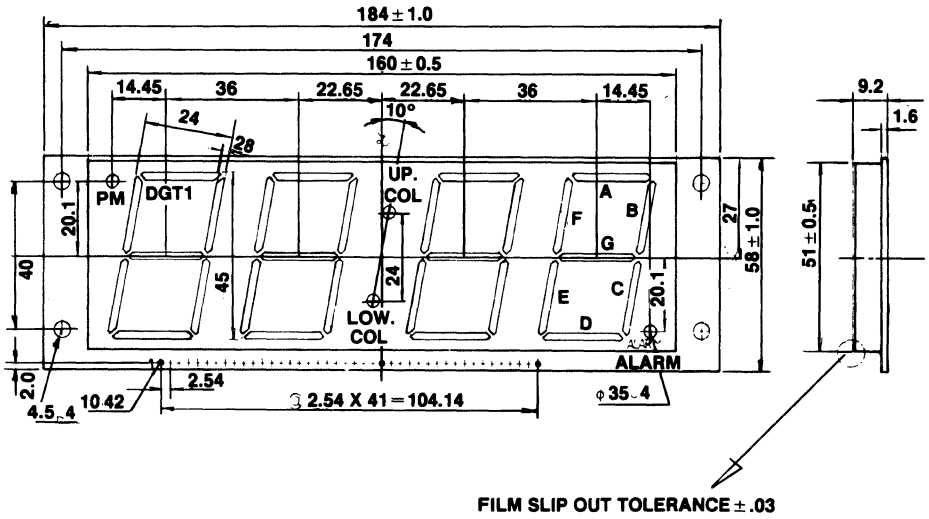

PY1425

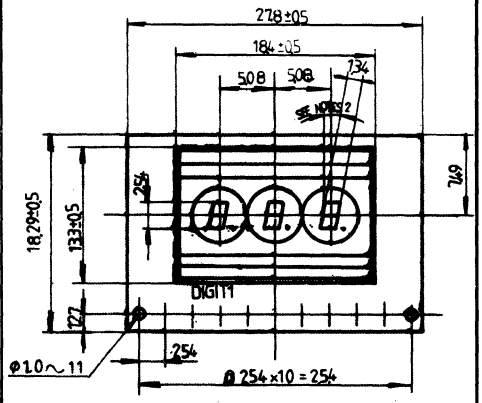

PY1426

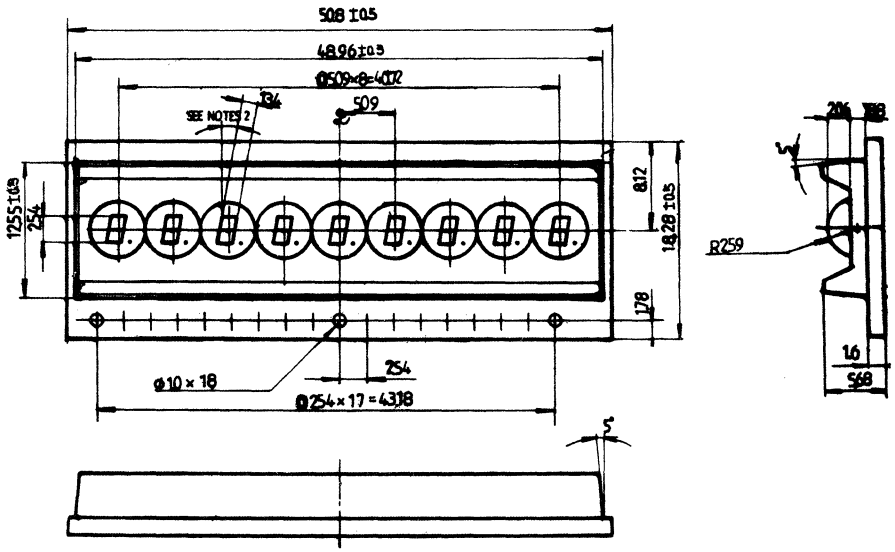

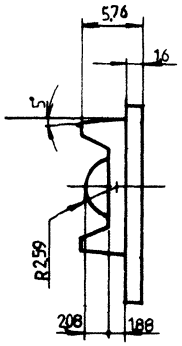

49. OUTLINE DRAWINGS

PY1428

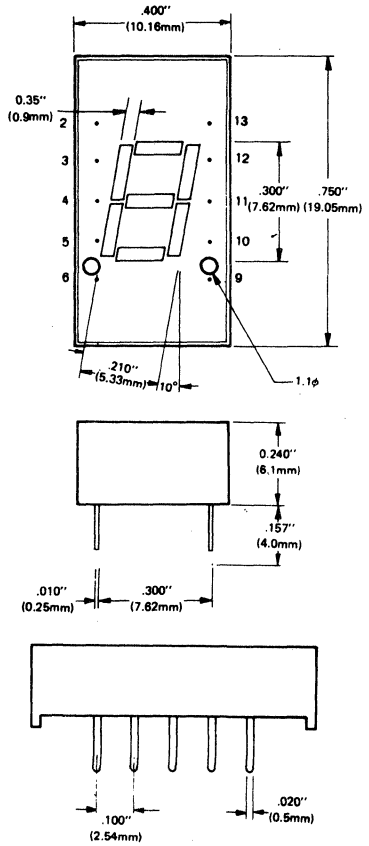

PY1429

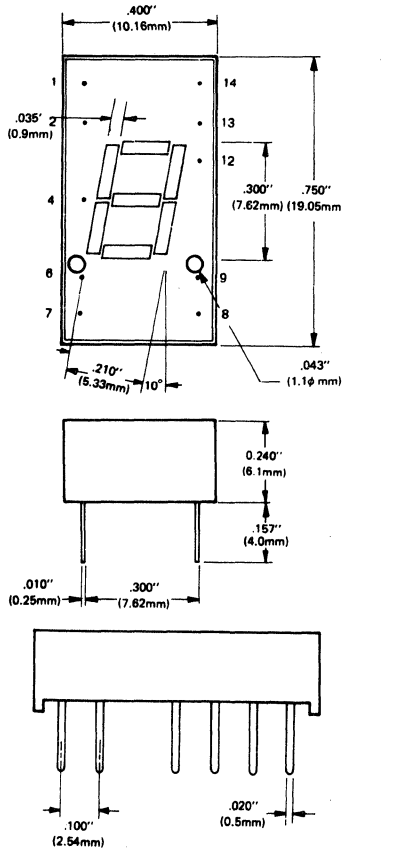

PY1430

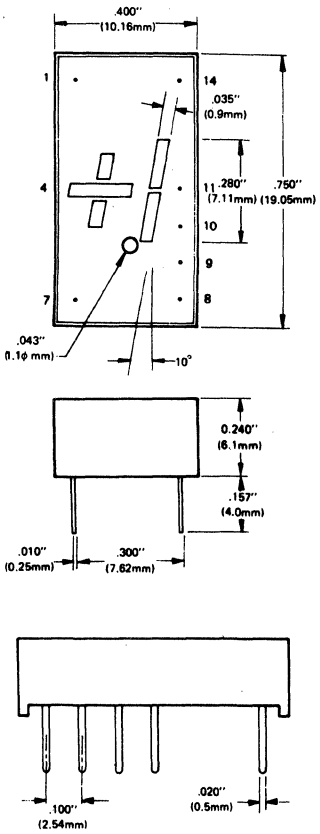

PY1431

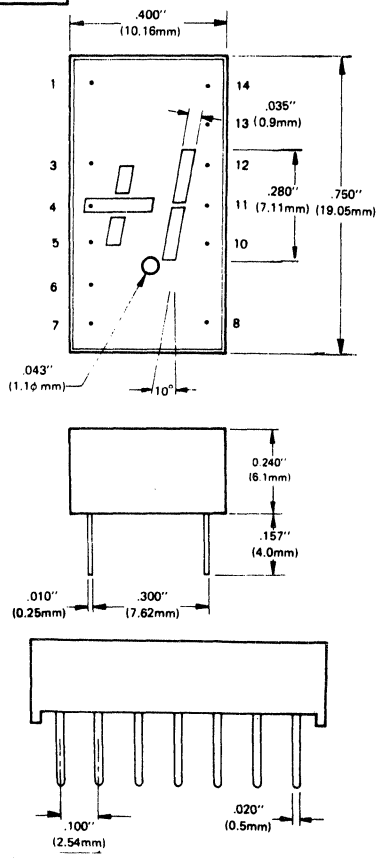

PY1432

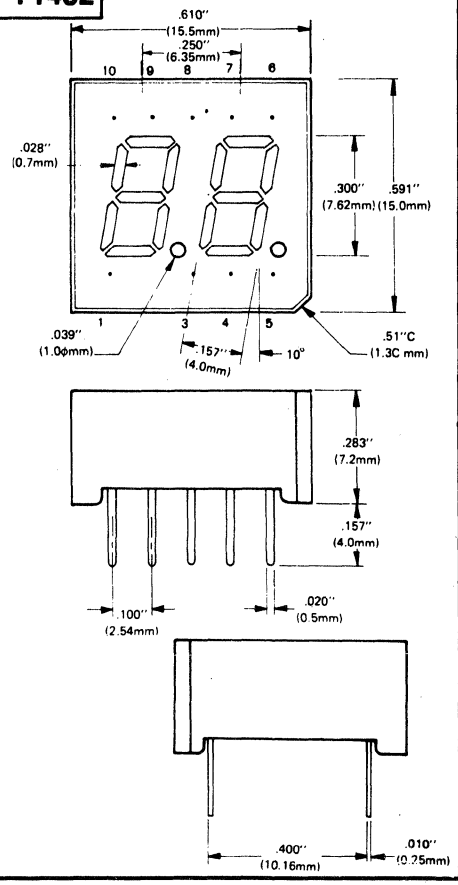

PY1433

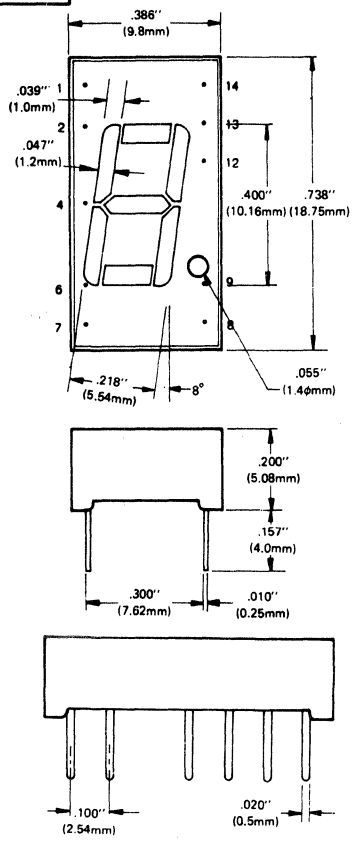

49. OUTLINE DRAWINGS

PY1434

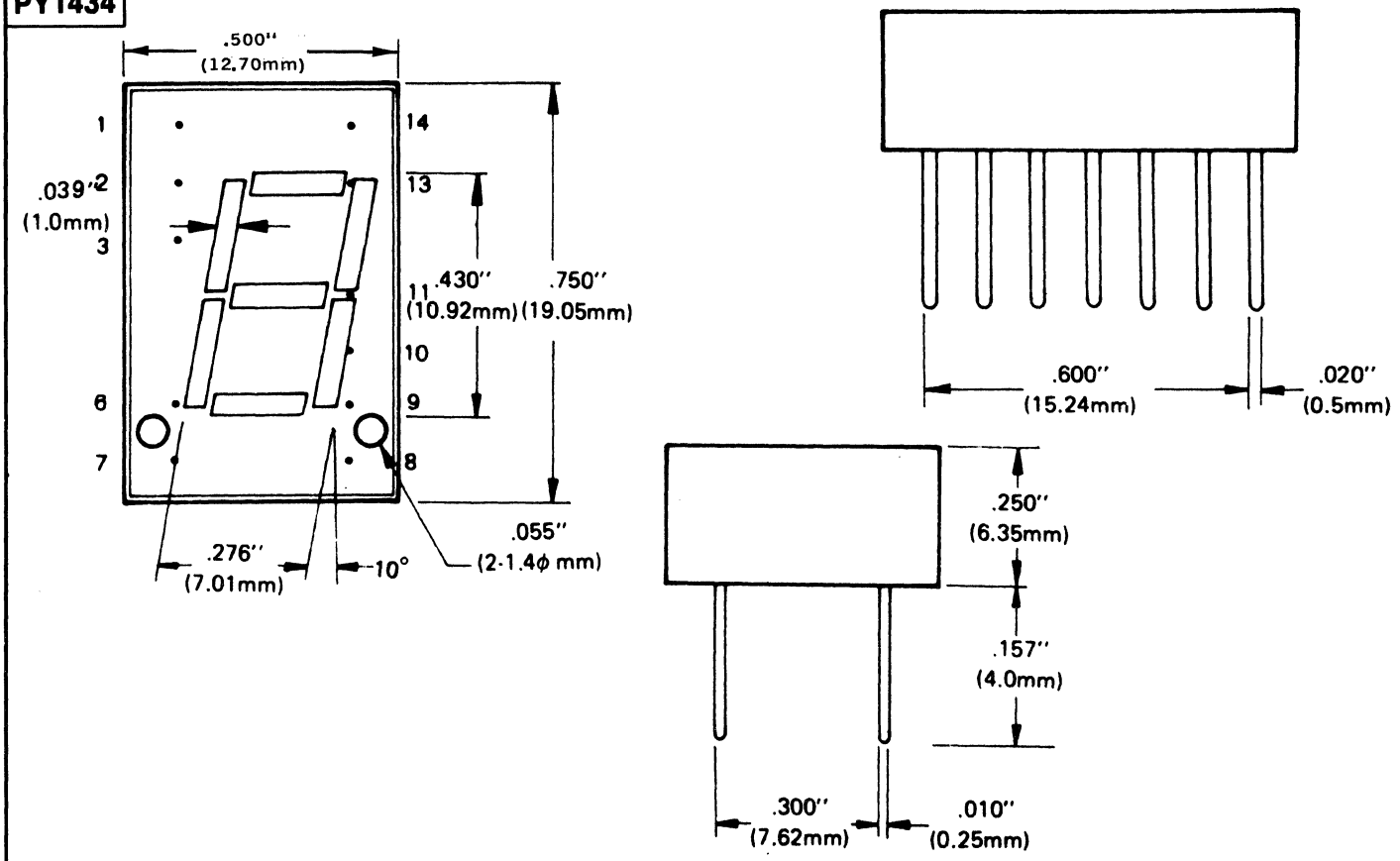

PY1435

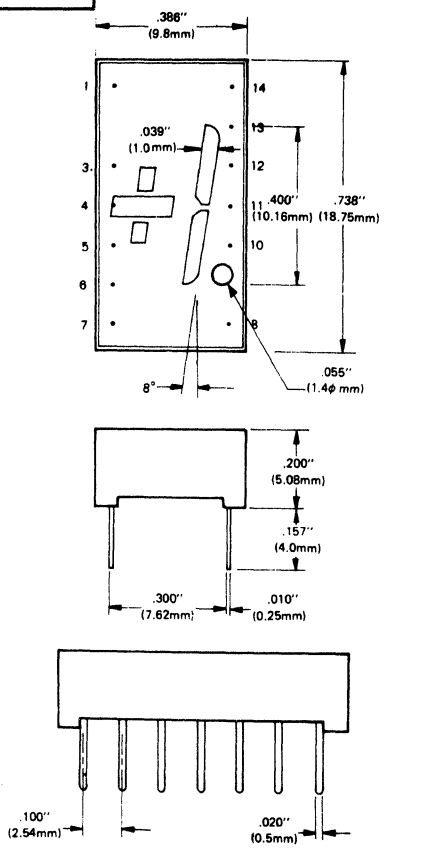

PY1436

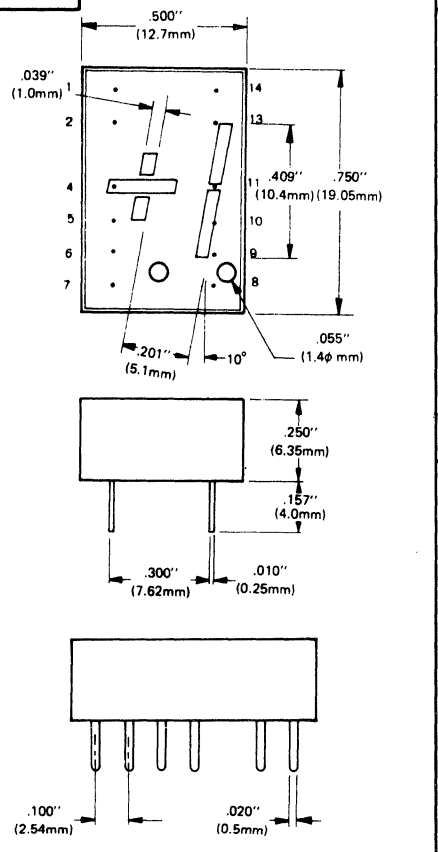

PY1437

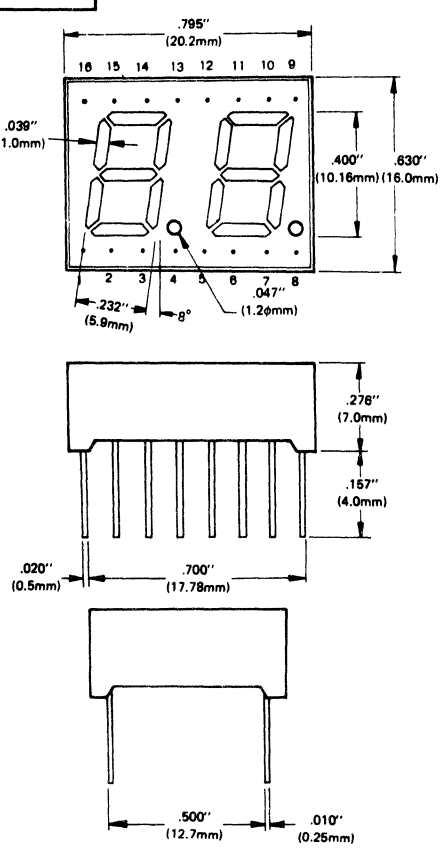

49. OUTLINE DRAWINGS

PY1438

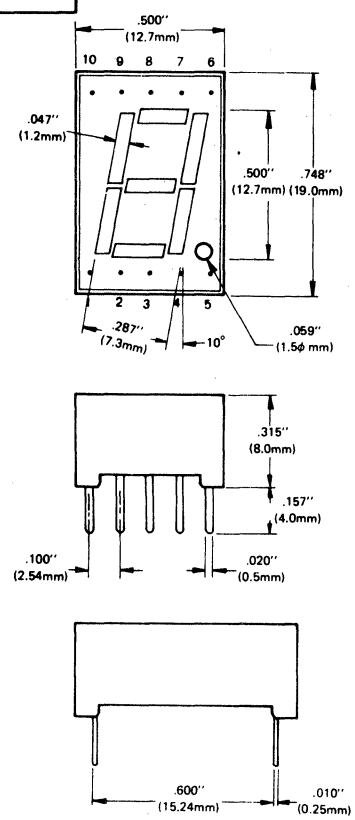

PY1439

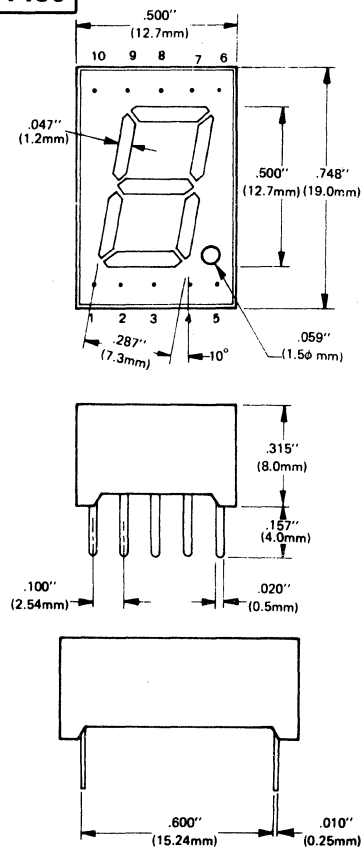

PY1440

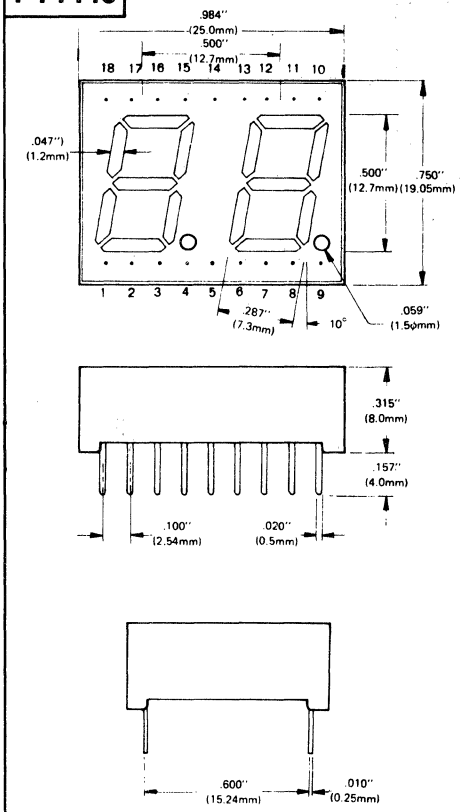

PY1441

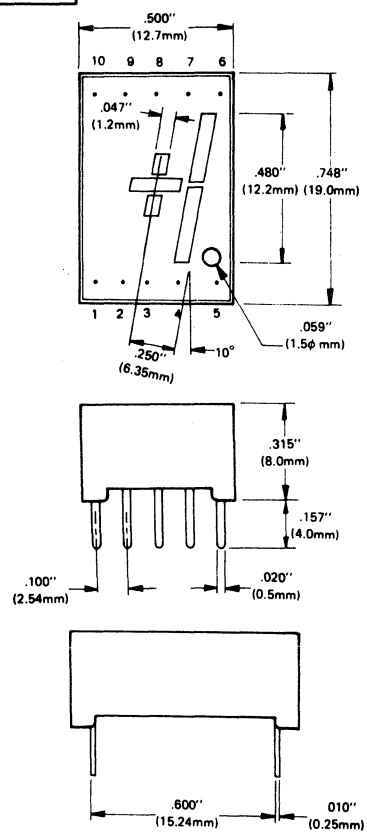

PY1442

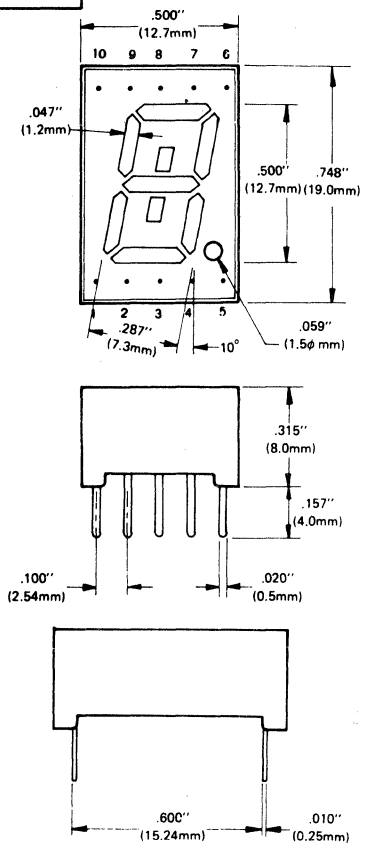

PY1443

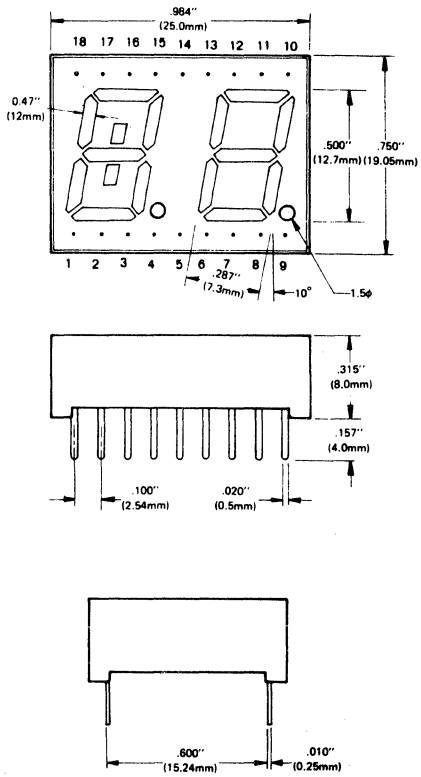

49. OUTLINE DRAWINGS

PY1444

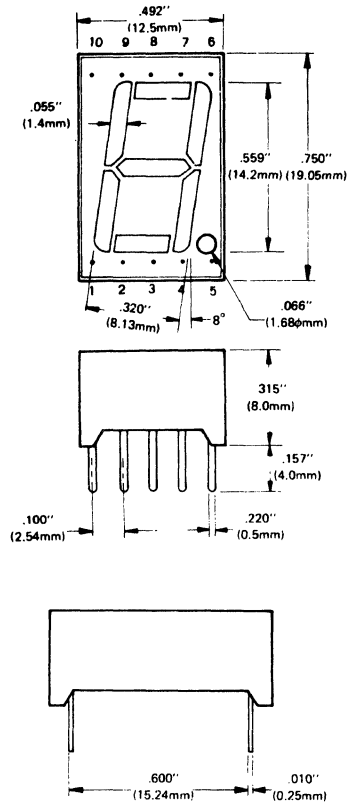

PY1445

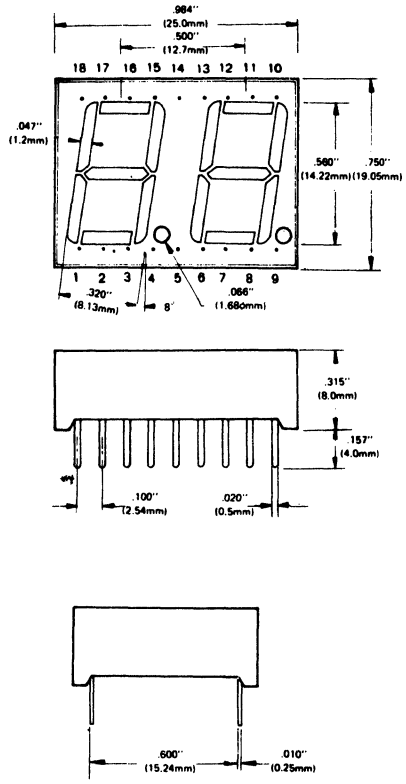

PY1446

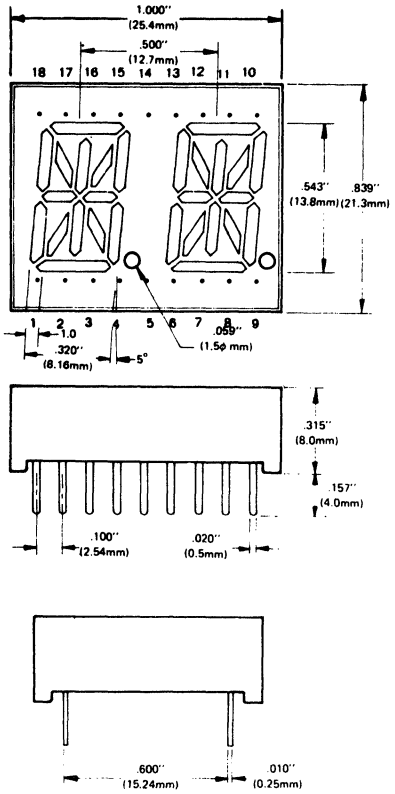

PY1447

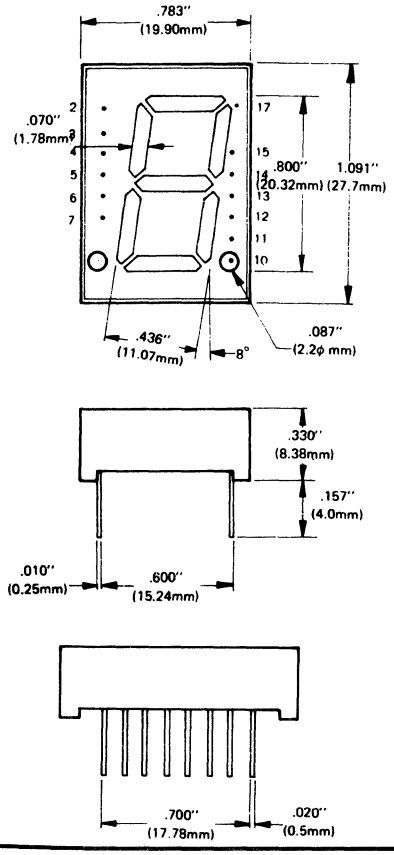

PY1448

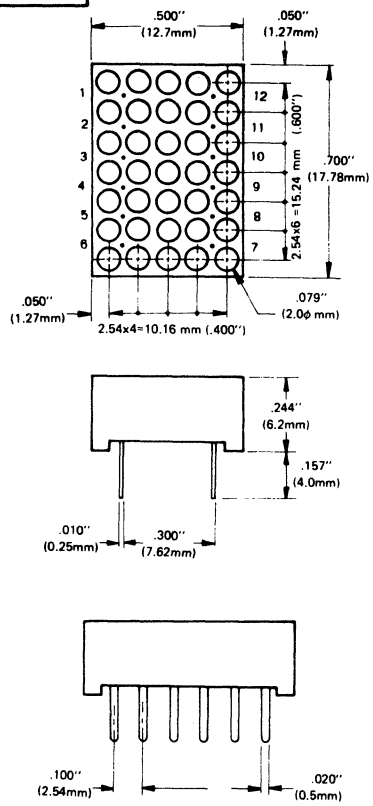

PY1449

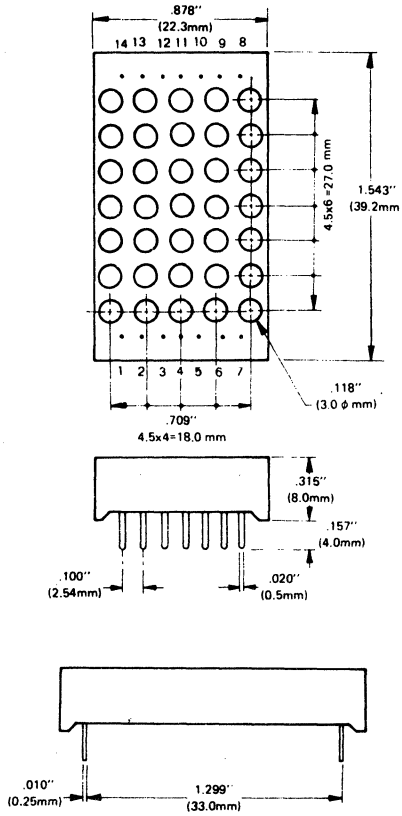

49. OUTLINE DRAWINGS

PY1450

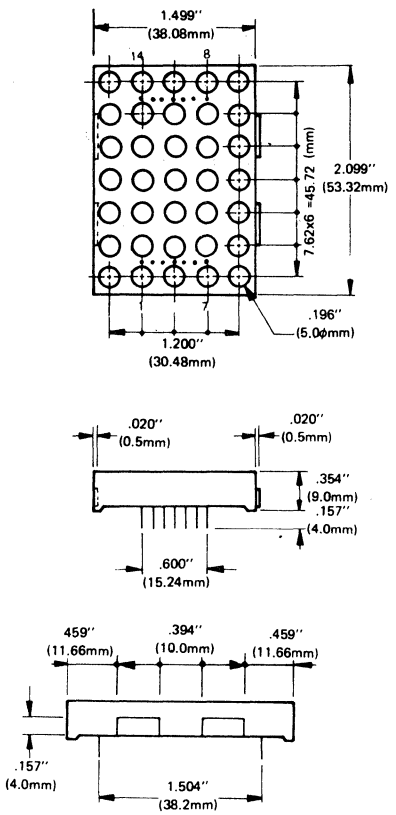

PY1451

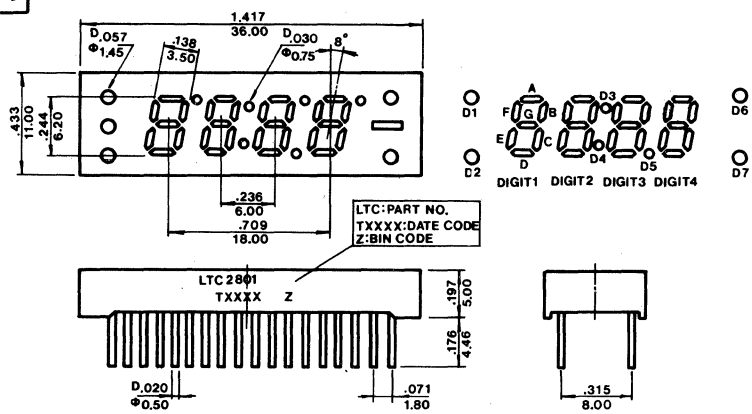

PY1452

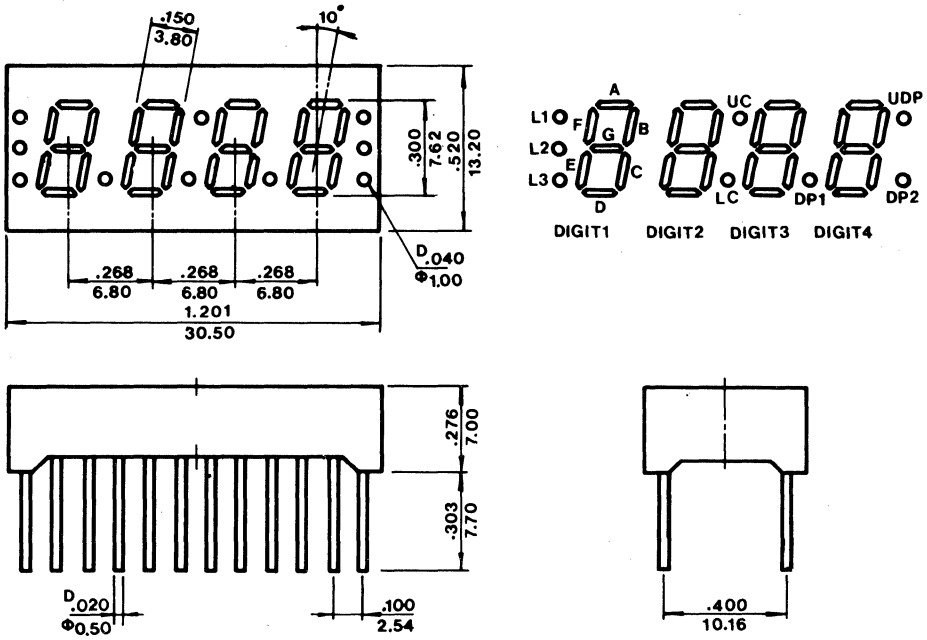

PY1453

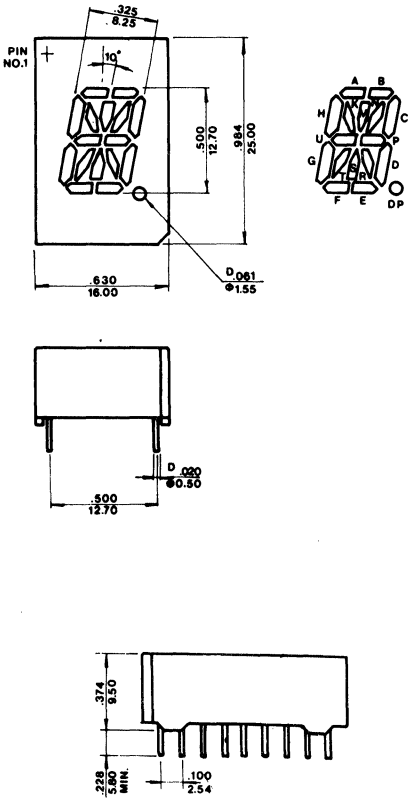

PY1455

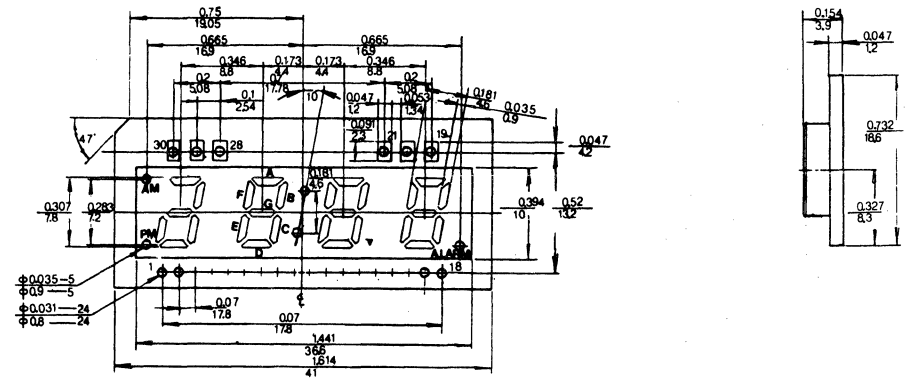

49. OUTLINE DRAWINGS

PY1456

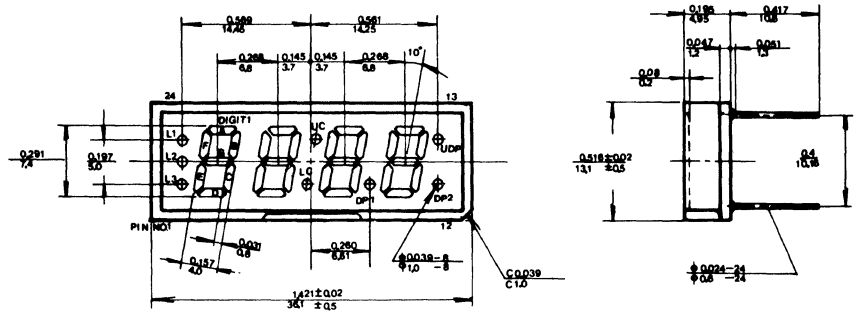

PY1457

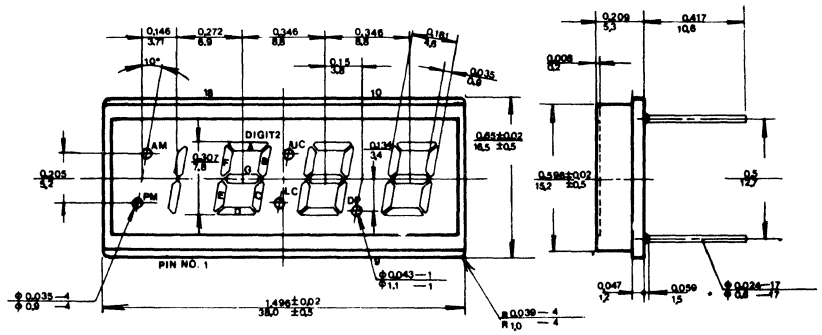

PY1458

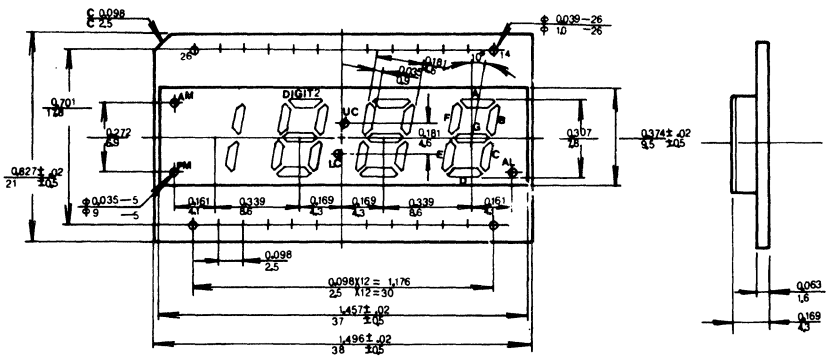

PY1461

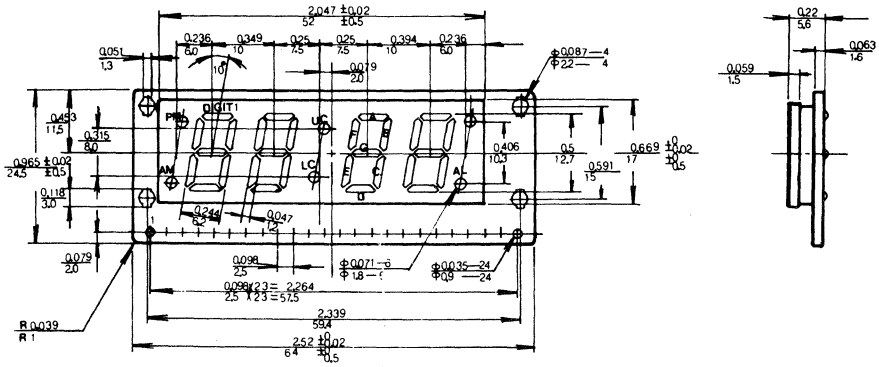

PY1475

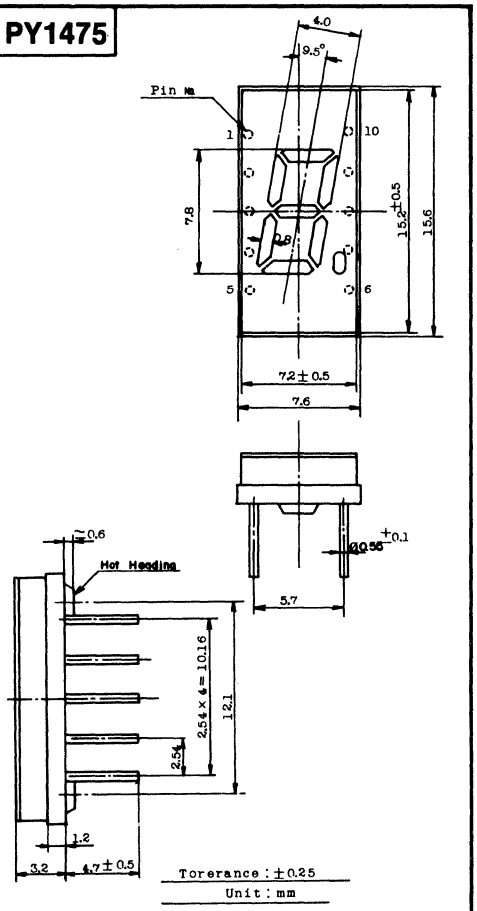

PY1476

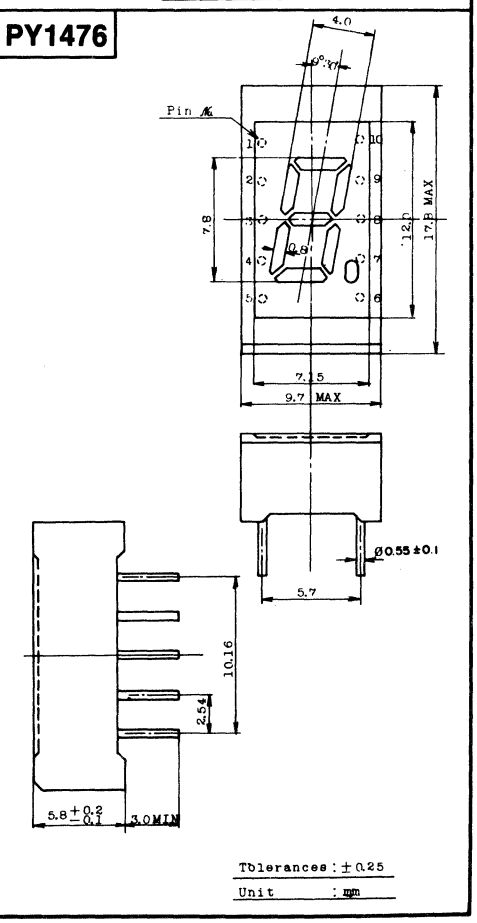

49. OUTLINE DRAWINGS

PY1459

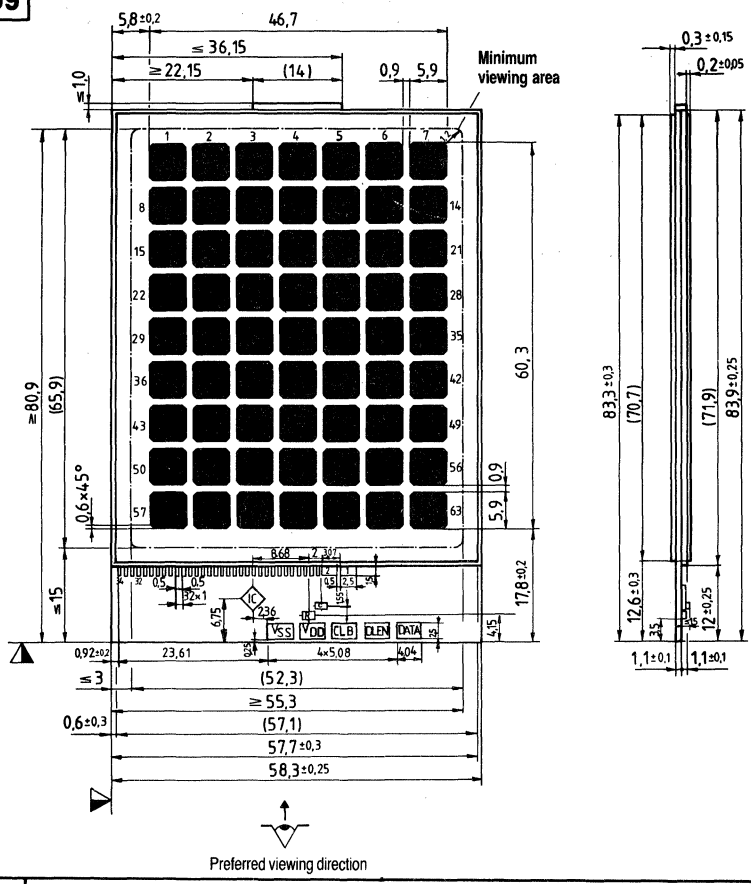

PY1477

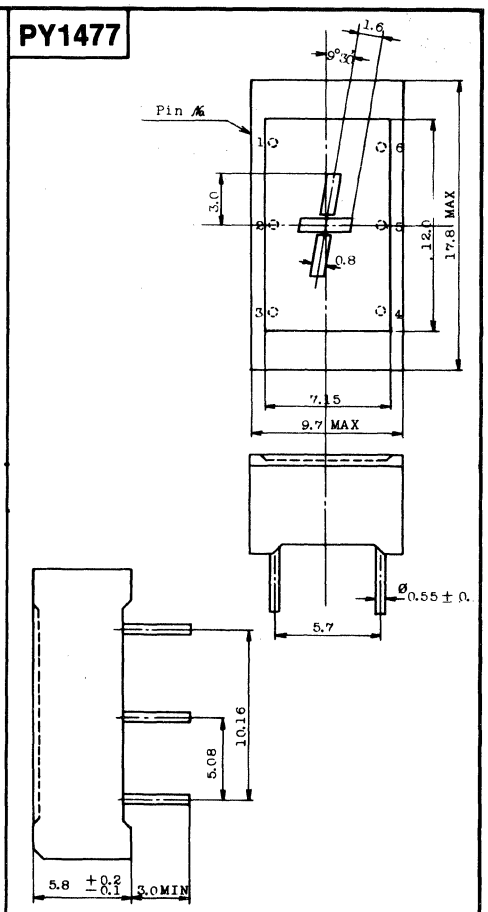

PY1460

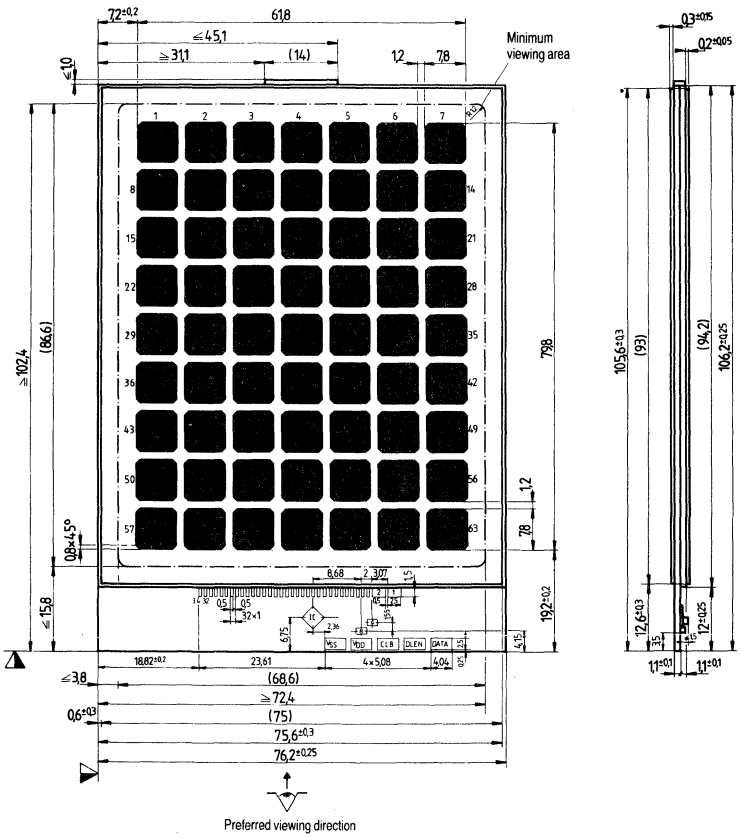

PY1478

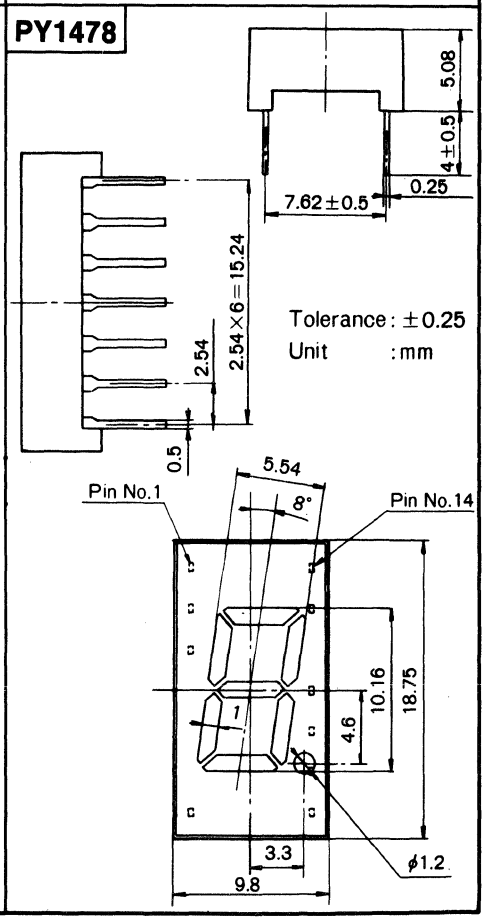

49. OUTLINE DRAWINGS

PY1463

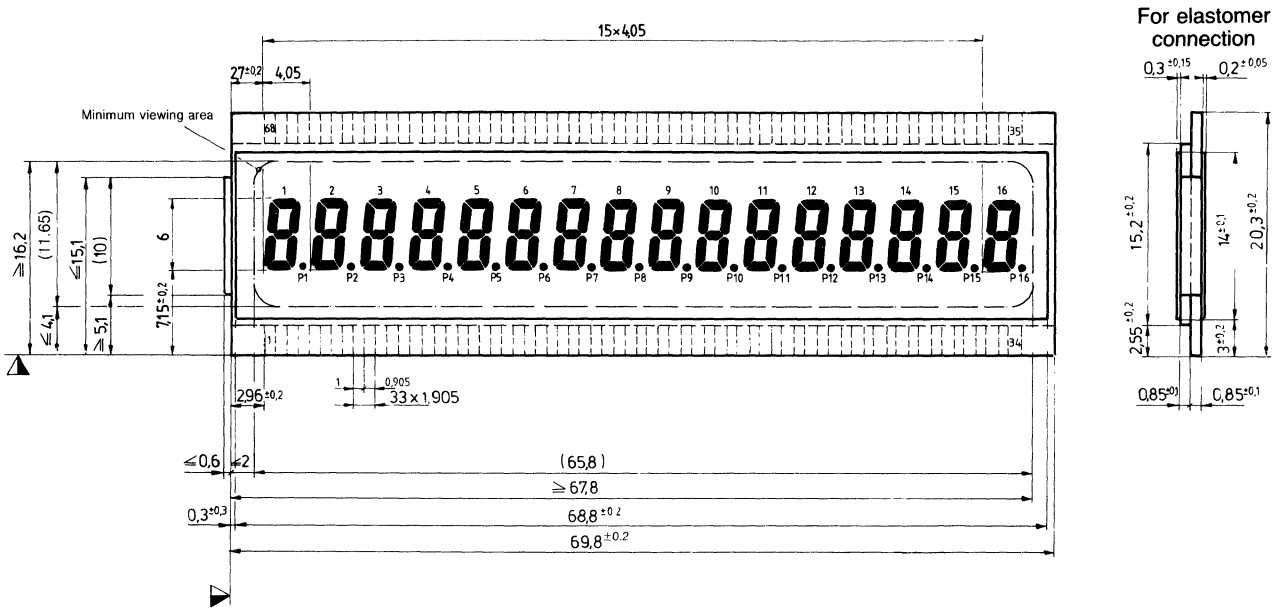

PY1464

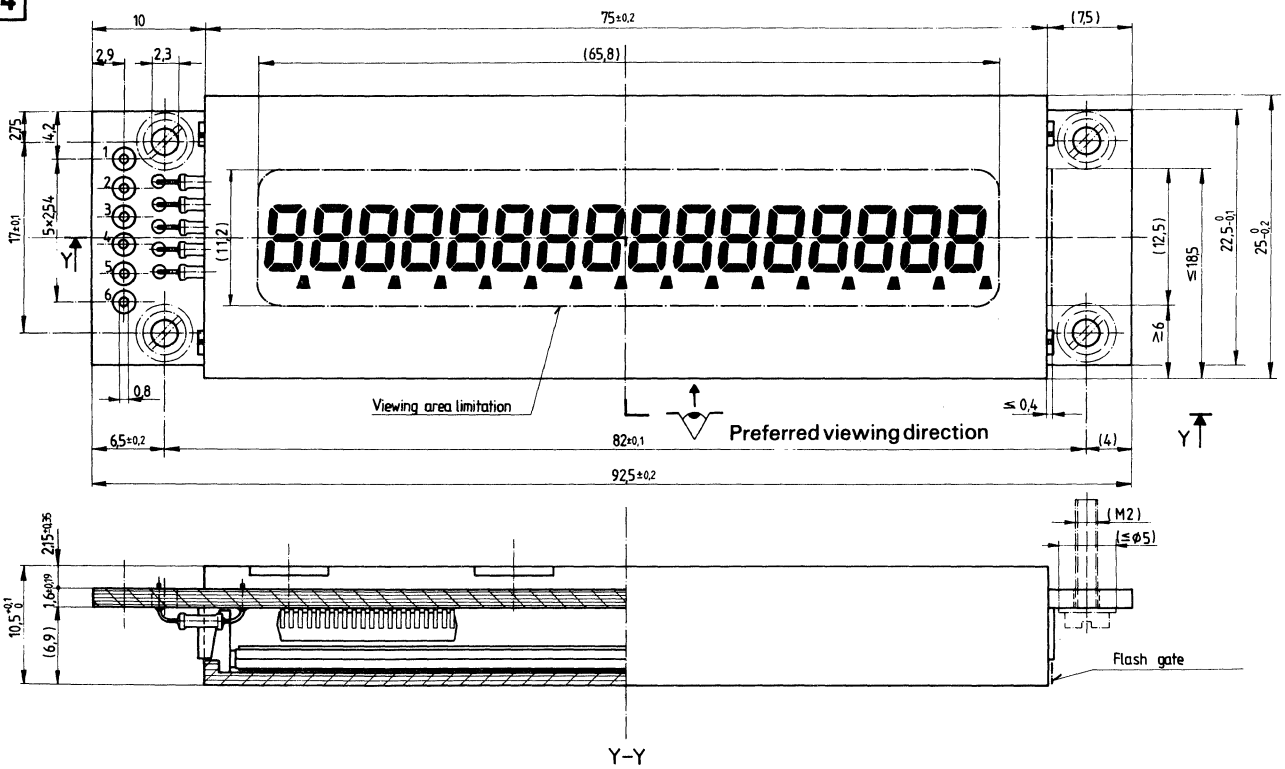

Connection number	1	2	3	4	5	6
Function	DLEN 1	DATA	DLEN 2	CLB	V_{OP}	GND

49. OUTLINE DRAWINGS

PY1466

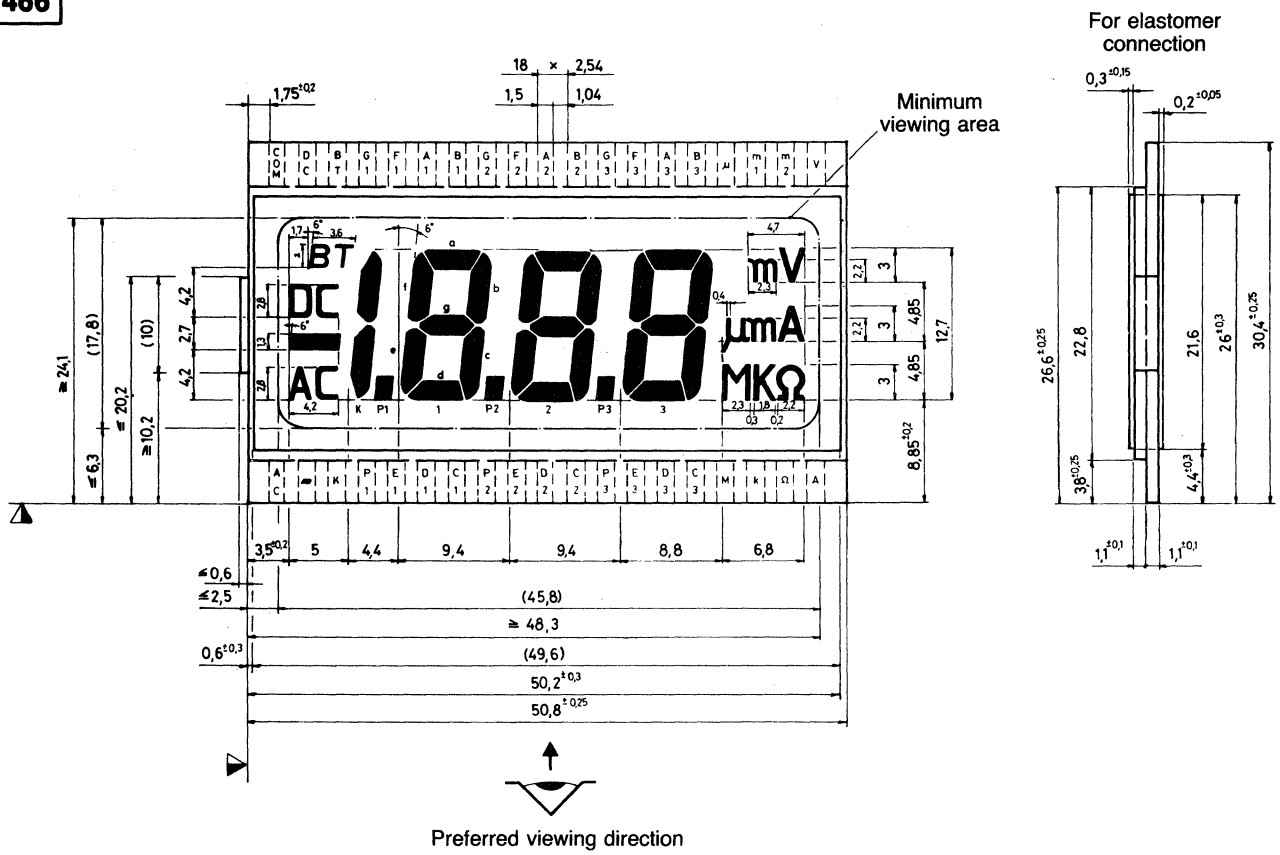

PY1467

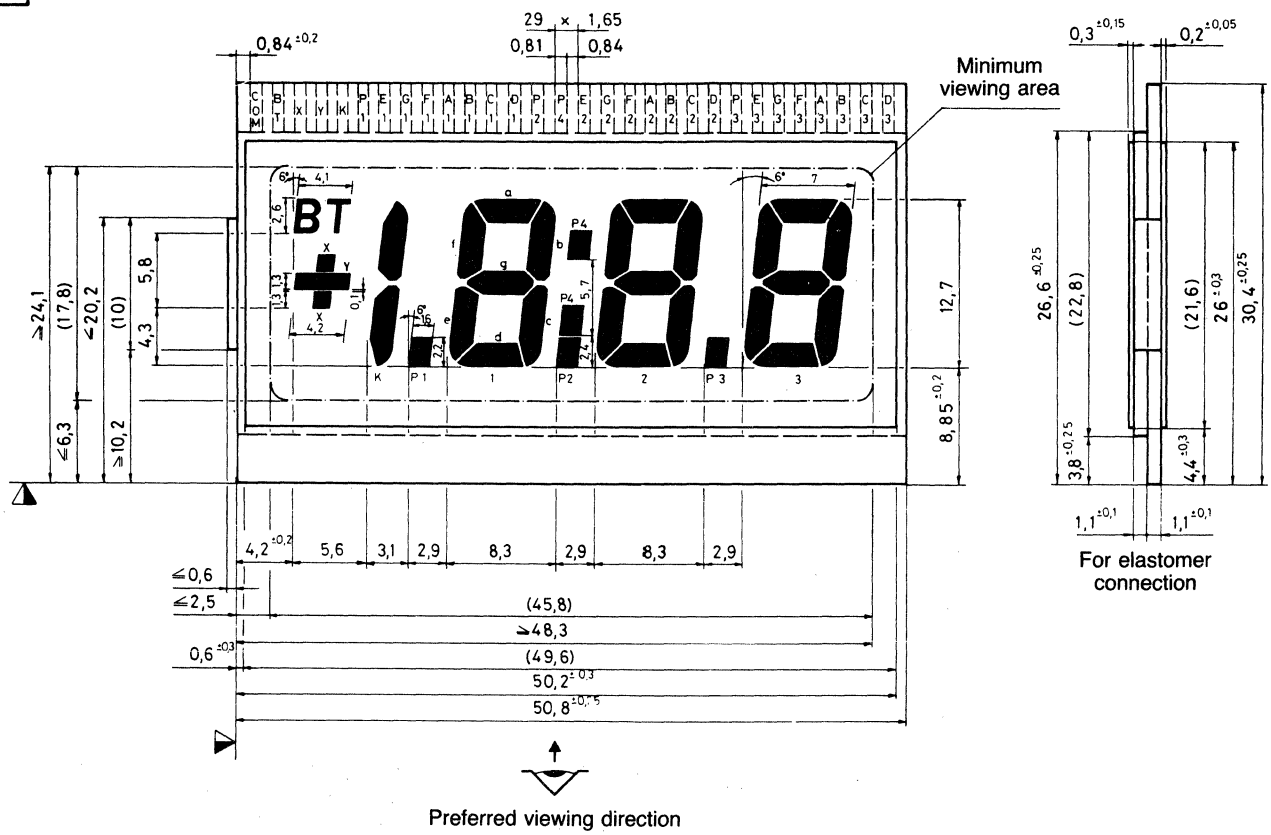

49. OUTLINE DRAWINGS

PY1465

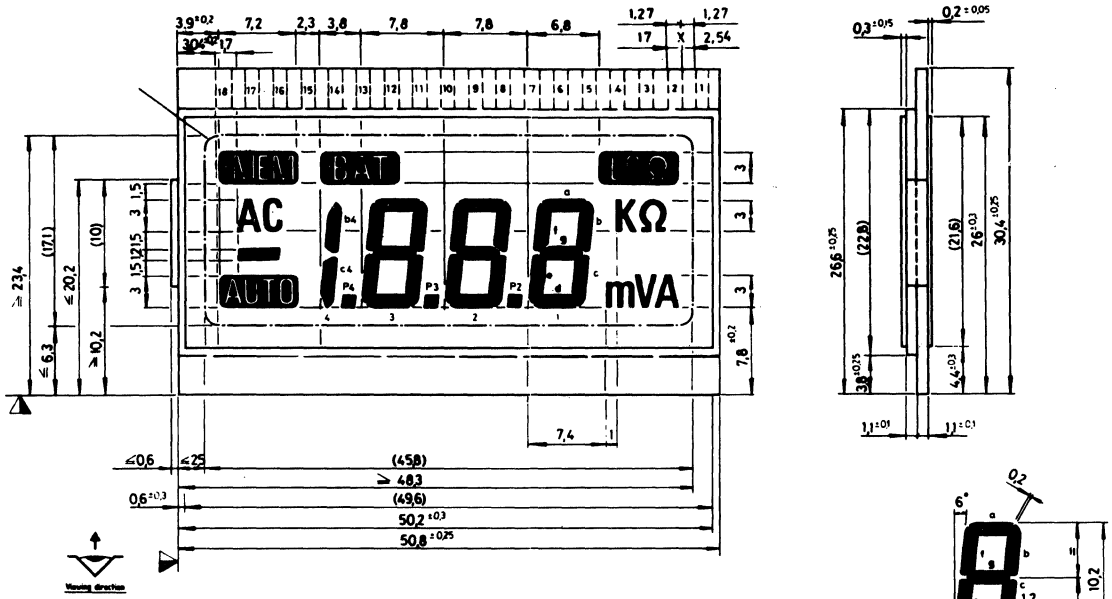

	1	2	3	4	5	6	7	8	9	10	11	12	13	14	15	16	17	18
COM1	com1	--	--	--	--	--	b1	a1	f1	b2	a2	f2	b3	a3	f3	b4	AC	BAT
COM2	--	com2	--	LOΩ	Ω	K	c1	g1	e1	c2	g2	e2	c3	g3	e3	c4	m	MEM
COM3	--	--	com3	A	V	m	--	d1	--	P2	d2	--	P3	d3	--	P4	AUTO	--

PY1469

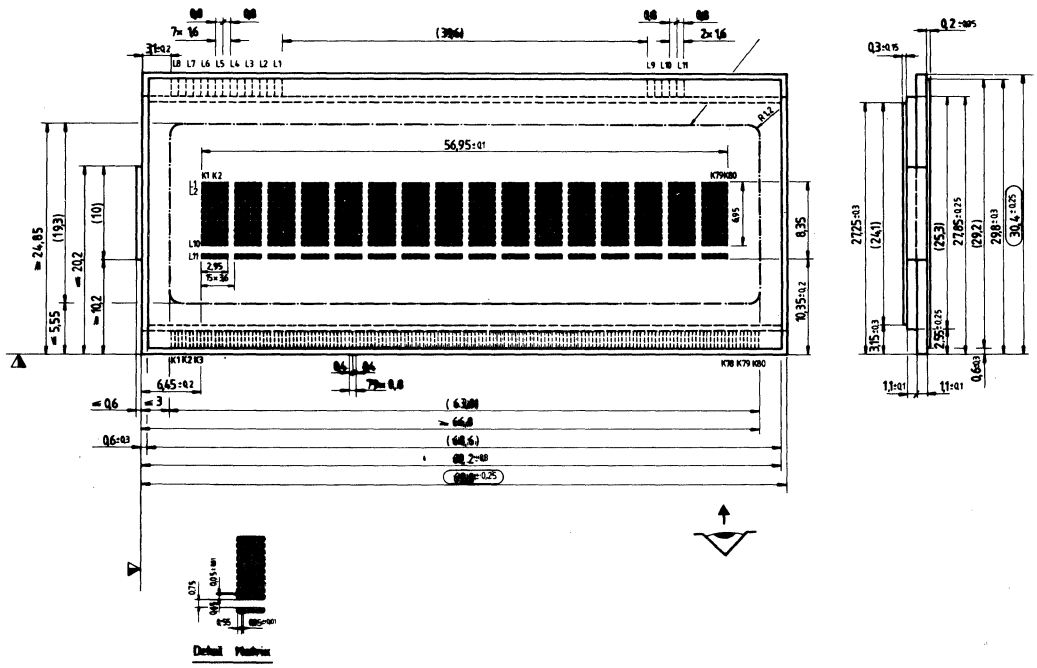

49. OUTLINE DRAWINGS

PY1462

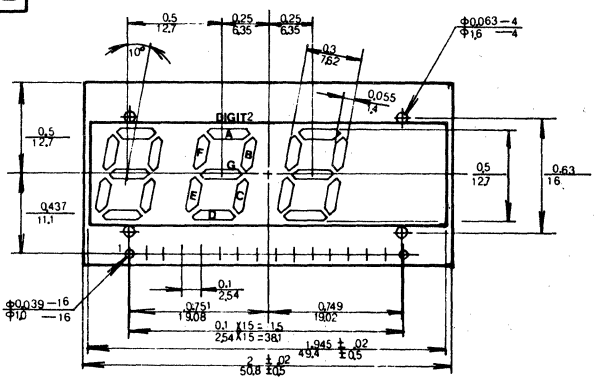

PY1479

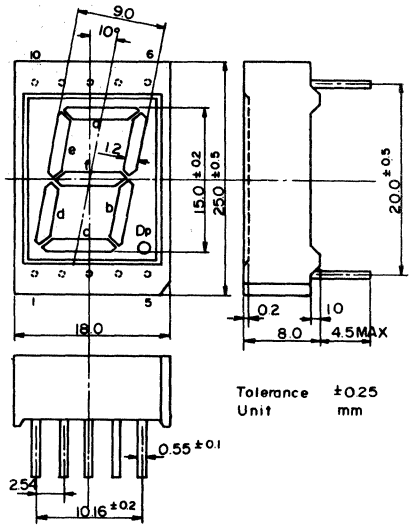

PY1480

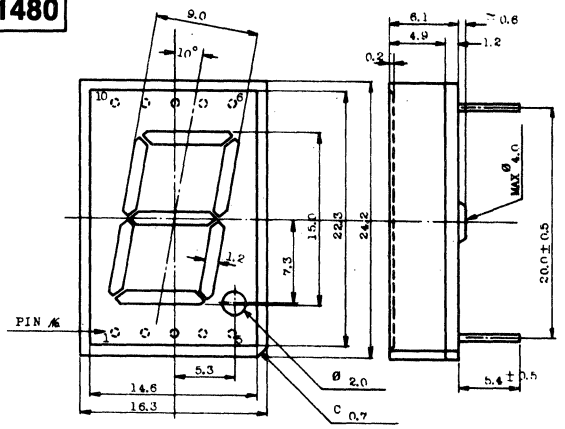

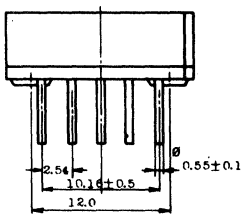

Note
Tolerances : ± 0.25
Unit : mm

PY1481

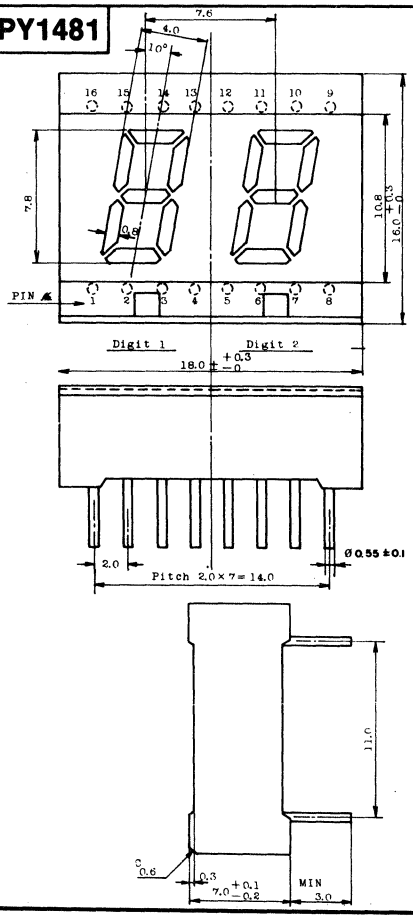

PY1472

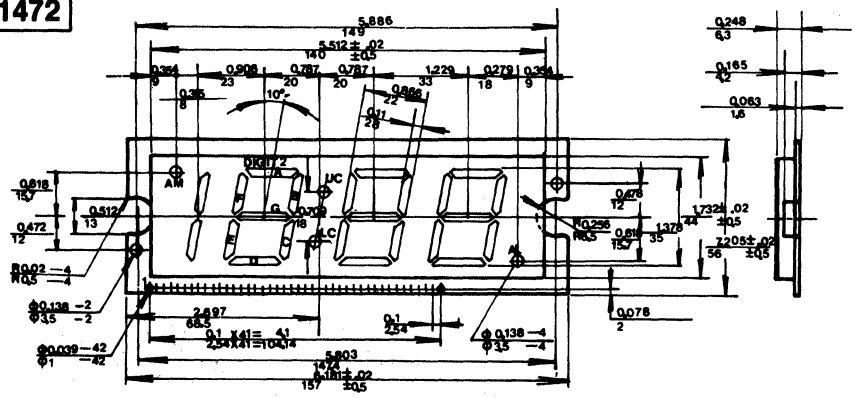

PY1482

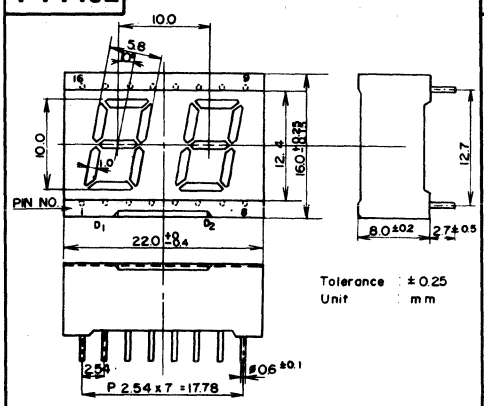

49. OUTLINE DRAWINGS

PY1470

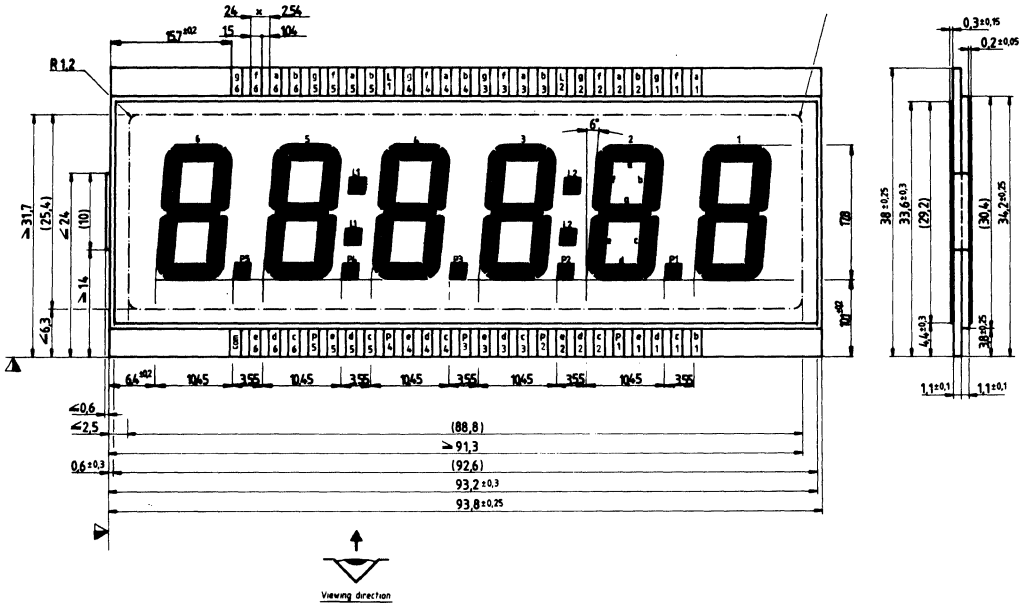

PY1471

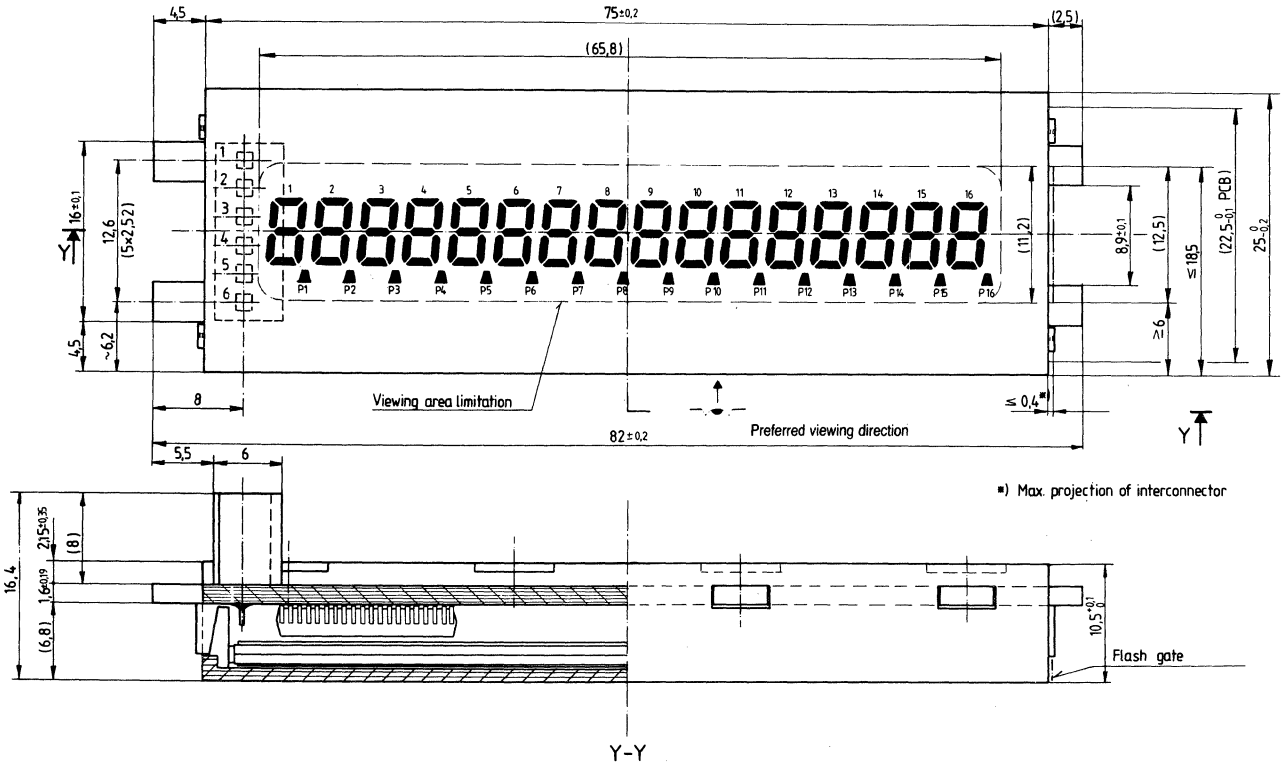

49. OUTLINE DRAWINGS

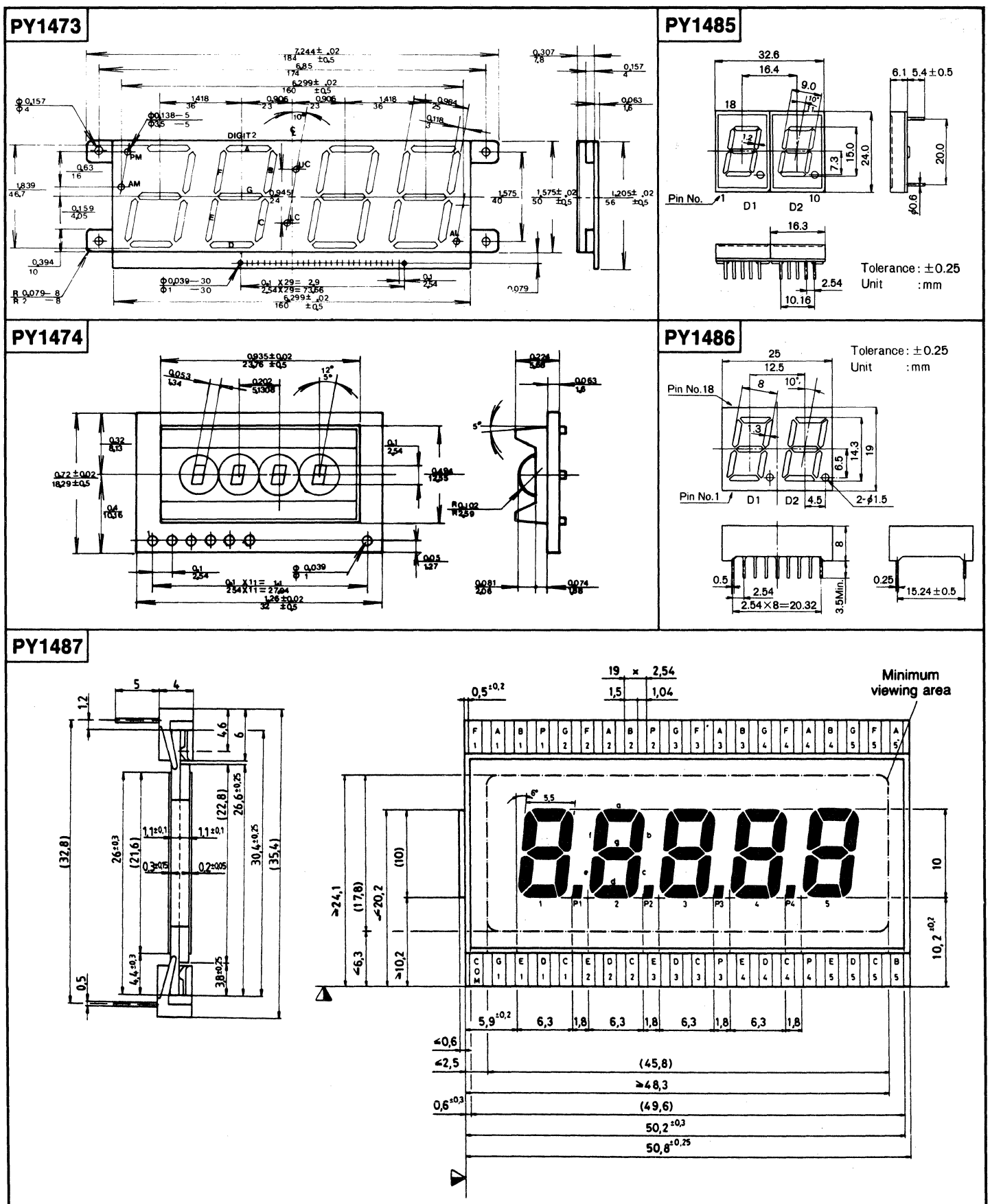

Fig. 5 - Dimensional Drawing
(Dimensions in mm)

49. OUTLINE DRAWINGS

PY1483

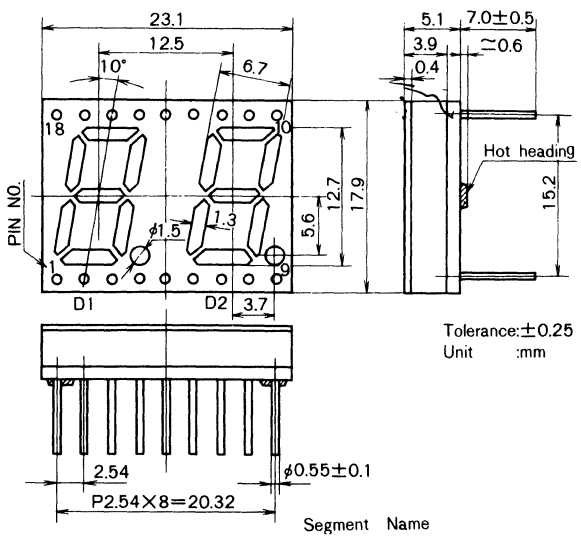

PY1484

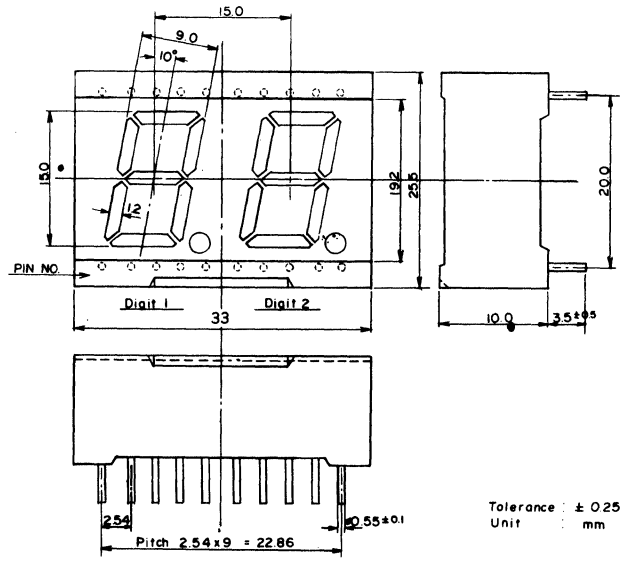

PY1488

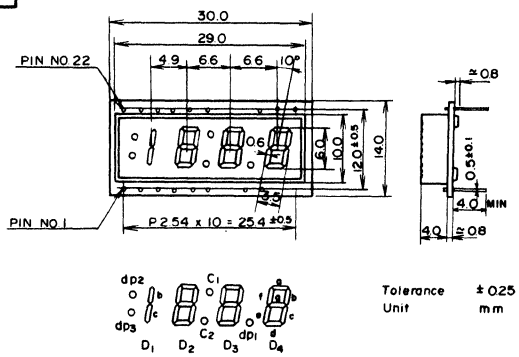

PIN NO.	ADDRESS	PIN NO.	ADDRESS
1	dp_3 Cathode	12	D_4 Common Anode
2	D_1 Common Anode	13	a Cathode
3	c Cathode	14	g "
4	e "	15	N.C (NO PIN)
5	C_2 "	16	N.C (")
6	D_3 Common Anode	17	C_1 Cathode
7	N.C (NO PIN)	18	D_2 Common Anode
8	d Cathode	19	f Cathode
9	dp_1 "	20	b "
10	N.C (NO PIN)	21	dp_2 "
11	N.C (")	22	dp_2 dp_3 Common Anode

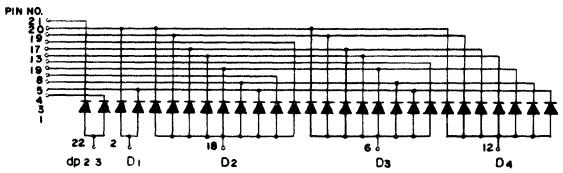

PY1489

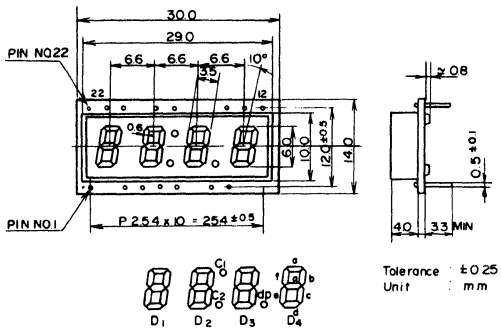

PIN NO.	ADDRESS	PIN NO.	ADDRESS
1	N C	12	D-4 Common Anode
2	N. C (NO PIN)	13	a Cathode
3	c Cathode	14	g "
4	e "	15	N C (NO PIN)
5	C_2 "	16	N C (NO PIN)
6	D-3 Common Anode	17	C_1 Cathode
7	N.C (NO PIN)	18	D-2 Common Anode
8	d Cathode	19	N C (NO PIN)
9	d.p "	20	b Cathode
10	N.C (NO PIN)	21	f "
11	N.C (NO PIN)	22	D-1 Common

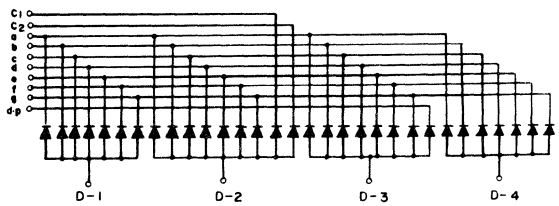

49. OUTLINE DRAWINGS

PY1491

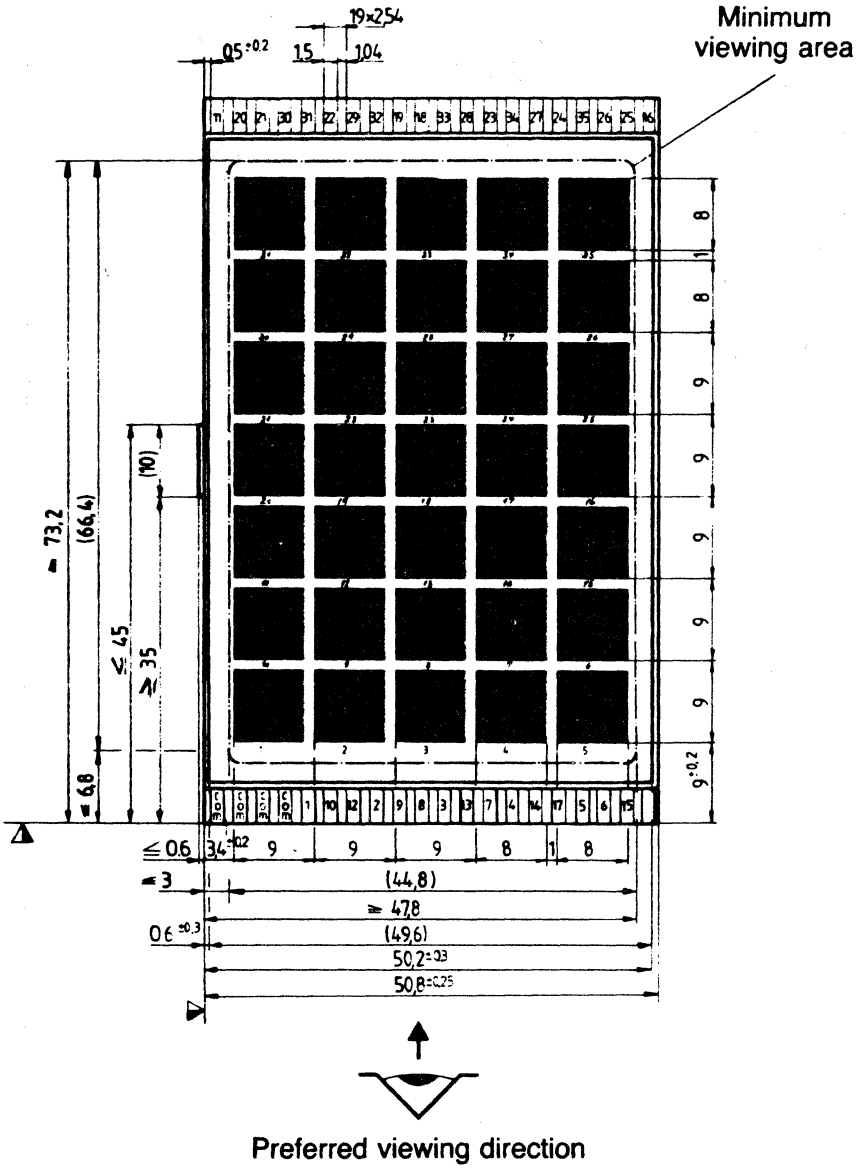

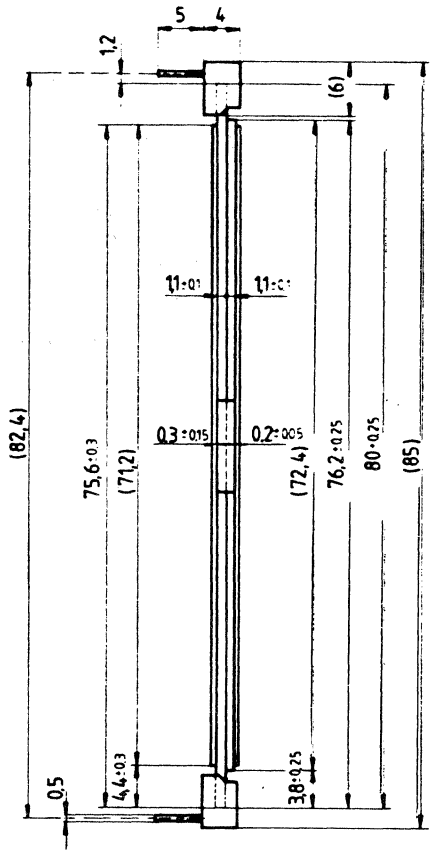

49. OUTLINE DRAWINGS

PY1490

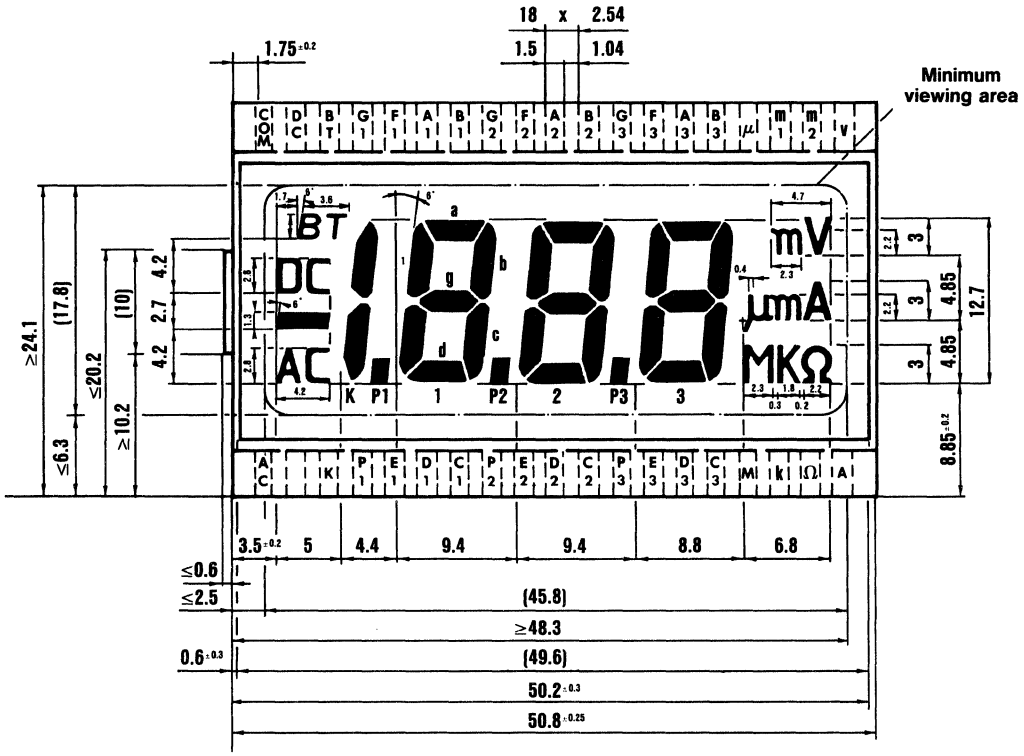

For elastomer connection

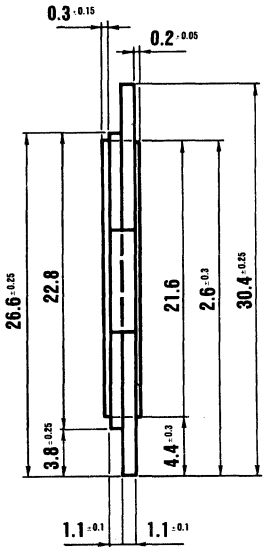

PY1492

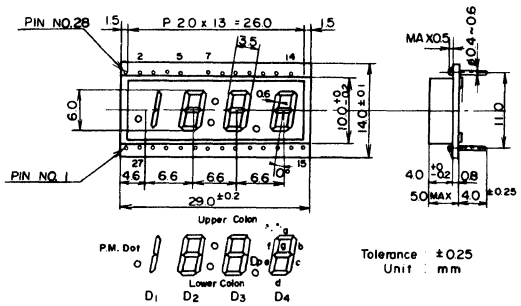

PIN NO.	ADDRESS	PIN NO.	ADDRESS
1	Common Anode	15	D4 b Cathode
2	PM Dot Cathode	16	" a "
3	D2 e "	17	" f "
4	" d "	18	D3 g "
5	" c "	19	" b "
6	Lower Colon "	20	" a "
7	D3 e "	21	" f "
8	" d "	22	Upper Colon "
9	" c "	23	N.C "
10	Dp "	24	D2 b "
11	" e "	25	" a "
12	" d "	26	" f "
13	" c "	27	" g "
14	" g "	28	D1 bc "

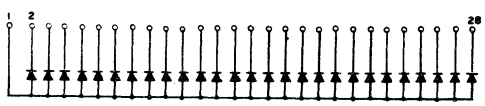

PY1493

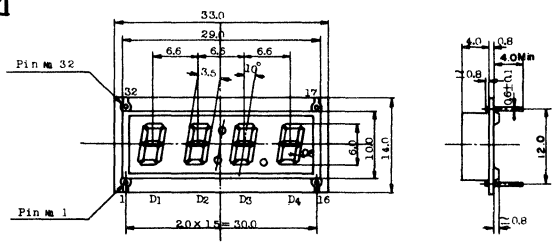

Pin Connection

Pin No	Address	Pin No	Address
1	Common per All	17	D4 b
2	D1 e	18	〃 a
3	〃 d	19	〃 f
4	〃 c	20	D3 g
5	D2 e	21	〃 b
6	〃 d	22	〃 a
7	〃 c	23	〃 f
8	Lower Colon	24	Upper Colon
9	D3 e	25	D2 g
10	〃 d	26	〃 b
11	〃 c	27	〃 a
12	dp	28	〃 f
13	D4 e	29	D1 g
14	〃 d	30	〃 b
15	〃 c	31	〃 a
16	〃 g	32	〃 f

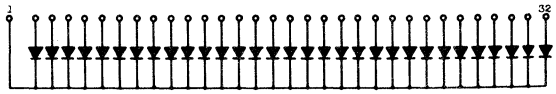

49. OUTLINE DRAWINGS

PY1599

Suffix	A
PY1599	5.8
PY1599a	6.9

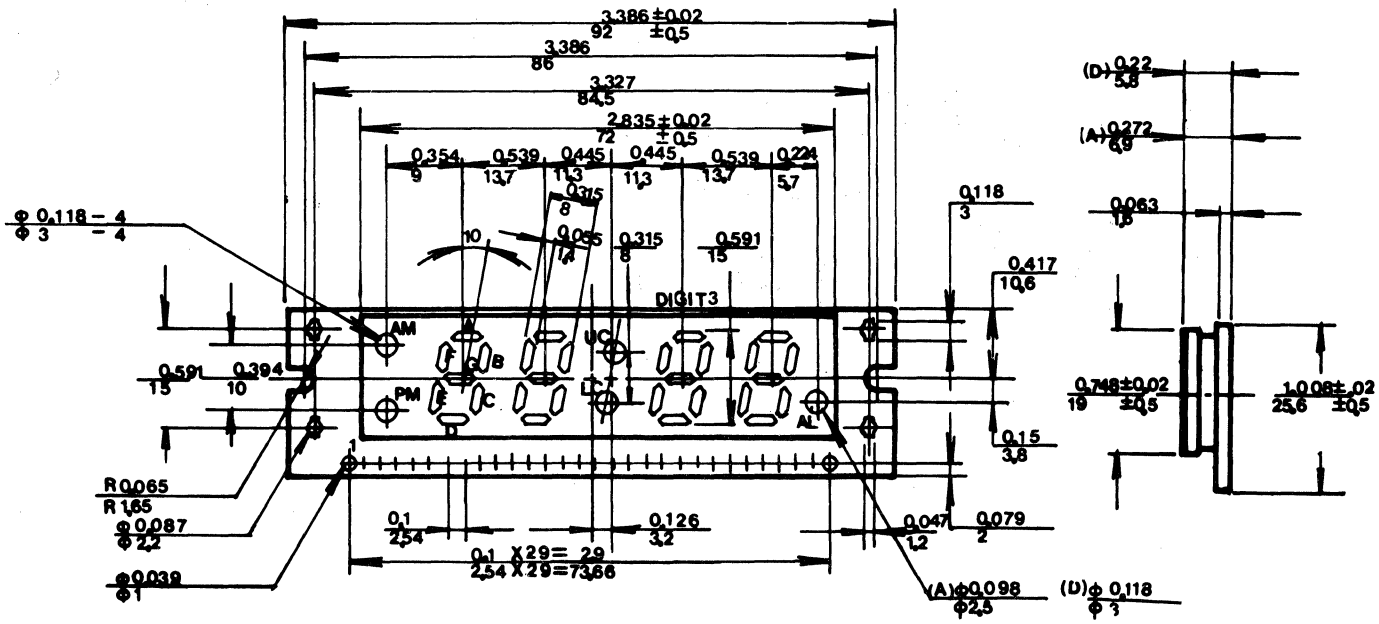

PY1601

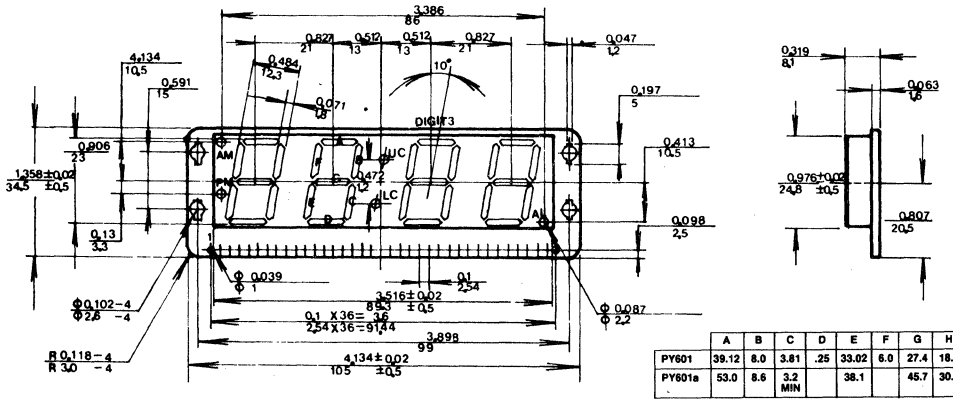

	A	B	C	D	E	F	G	H	J	K	L	M	N
PY601	39.12	8.0	3.81	.25	33.02	6.0	27.4	18.2	22.34				
PY601a	53.0	8.6	3.2 MIN		38.1		45.7	30.4	38.3				

PY1602

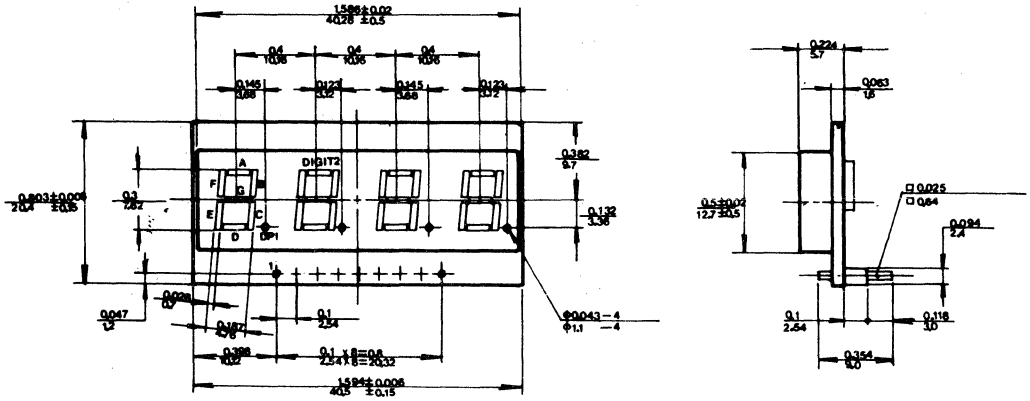

49. OUTLINE DRAWINGS

PY1604

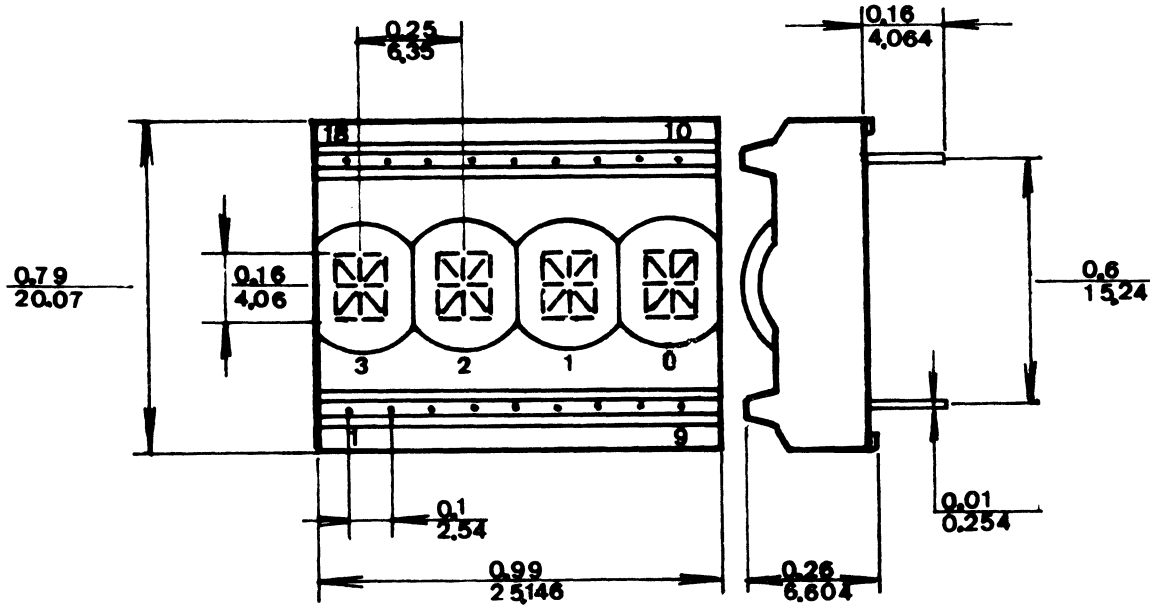

PY1605

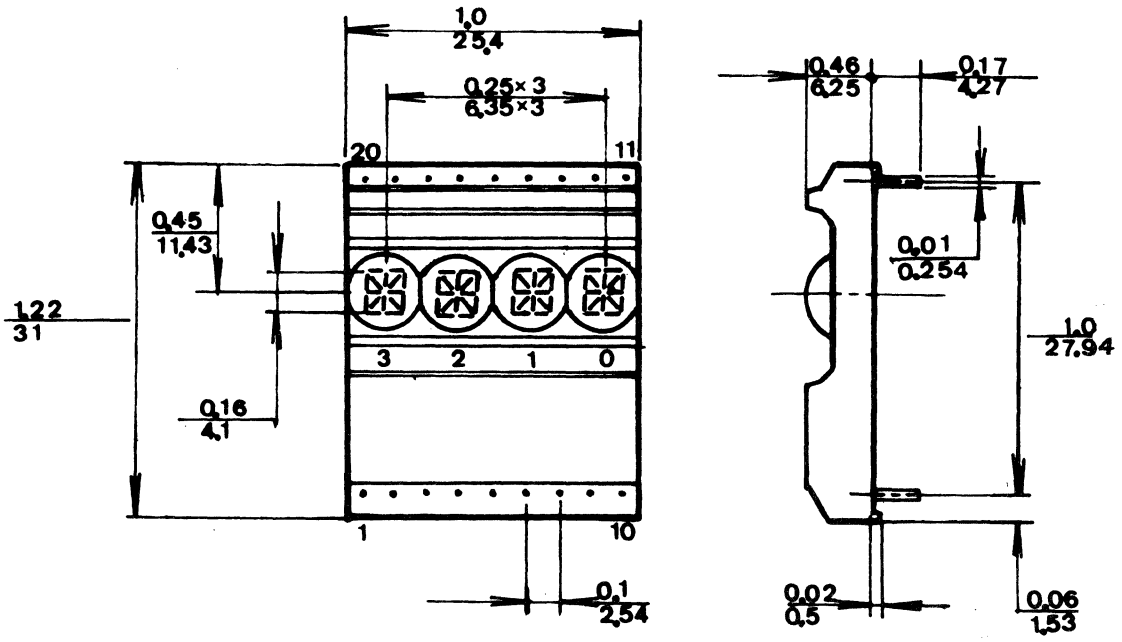

49. OUTLINE DRAWINGS

PY1494

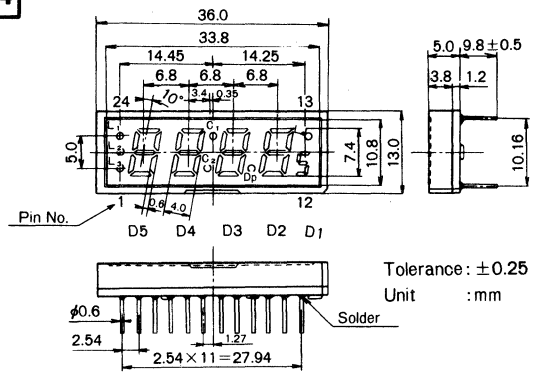

PIN NO.	ADDRESS	PIN NO.	ADDRESS
1	L_2 Cathode	13	L_4 Anode
2	L_3 〃	14	D1(5) Cathode
3	L_1 〃	15	Dp 〃
4	D5 Common Cathode	16	C_1,C_2 〃
5	D4 〃	17	D2 Common Cathode
6	C Anode	18	D3 〃
7	C_1,C_2 〃	19	f Anode
8	d 〃	20	b 〃
9	e 〃	21	a 〃
10	Dp 〃	22	L_1 〃
11	g&D1(5) 〃	23	L_3 〃
12	L_4 Cathode	24	L_2 〃

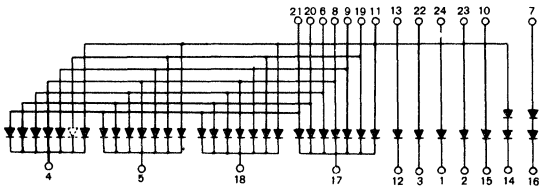

PY1495

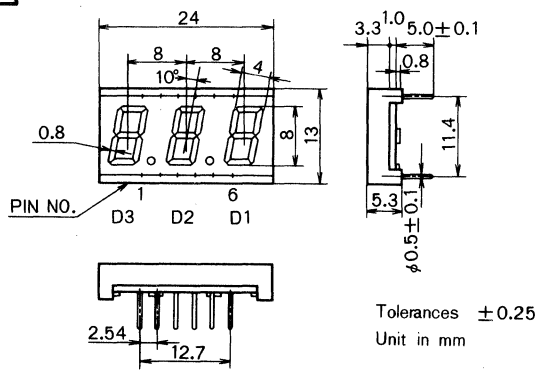

PIN No.	ADDRESS	PIN No.	ADDRESS
1	D−3 COMMON ANODE	7	SEGMENT B CATHODE
2	D−2 〃 〃	8	〃 A 〃
3	D−1 〃 〃	9	d.p. CATHODE
4	SEGMENT E CATHODE	10	N.C.
5	〃 D 〃	11	SEGMENT F CATHODE
6	〃 C 〃	12	〃 G 〃

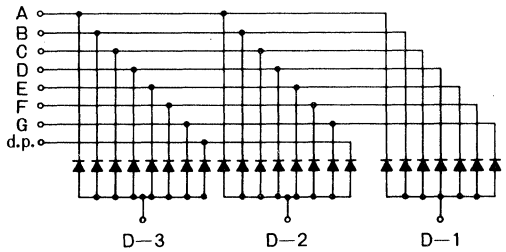

PY1496

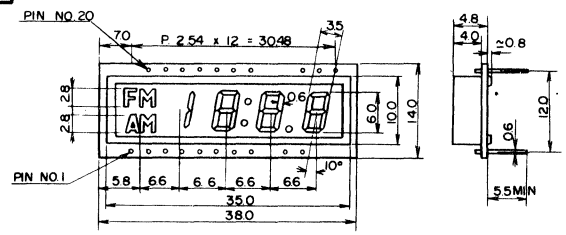

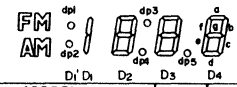

Tolerance : ±0.25
Unit : mm

PIN NO.	ADDRESS	PIN NO.	ADDRESS
1	AM Cathode	11	D-4 Common Anode
2	FM / AM Common Anode	12	Segment a Cathode
3	(dp 2) Cathode	13	Segment g Cathode
4	D-1 Common Anode	14	(dp3) Cathode
5	Segment c Cathode	15	D-2 Common Anode
6	Segment e Cathode	16	Segment f Cathode
7	(dp4) Cathode	17	Segment b Cathode
8	D-3 Common Anode	18	(dp1) Cathode
9	Segment d Cathode	19	D-1 Common Anode
10	(dp5) Cathode	20	FM Cathode

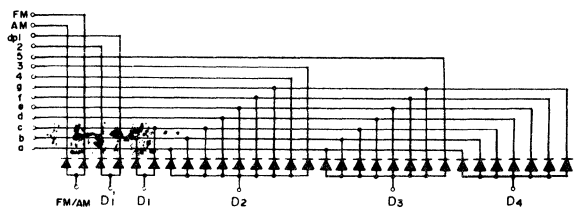

PY1497

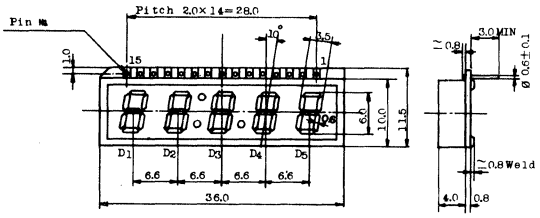

Tolerance : ±0.25
Unit : mm

Pin Connection

Pin No.	Address	Pin No.	Address
1	d Anode	9	Colon Anode
2	D_5 Common Cathode	10	D_2 Common Cathode
3	c Anode	11	f Anode
4	dp 〃	12	g 〃
5	D_4 Common Cathode	13	Colon Cathode
6	b Anode	14	e Anode
7	a 〃	15	D_1 Common Cathode
8	D_3 Common Cathode		

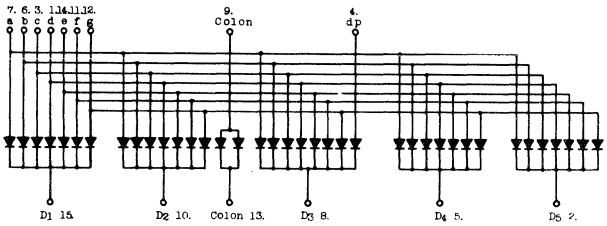

49. OUTLINE DRAWINGS

PY1498

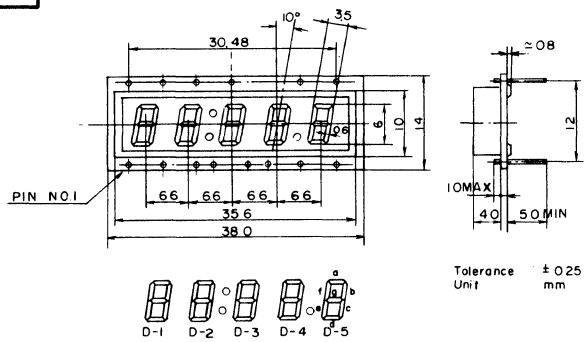

PIN NO	ADDRESS	PIN NO	ADDRESS
1	a Anode	8	e Anode
2	b "	9	D-5 Cathode
3	d.p "	10	D-4 "
4	e "	11	D-3 "
5	g "	12	d-p "
6	d "	13	D-2 "
7	f "	14	D-1 "

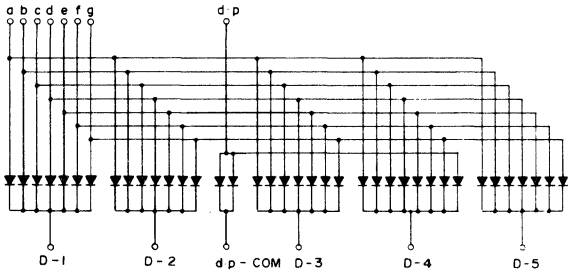

PY1499

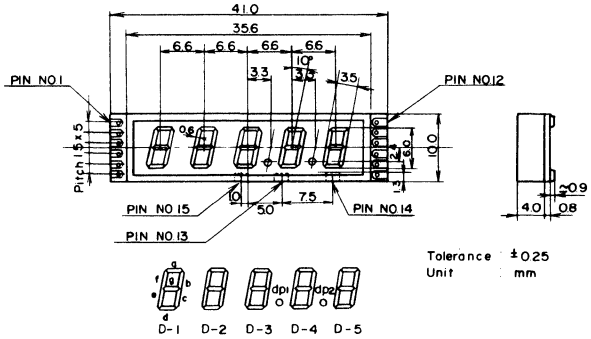

PIN NO	ADDRESS	PIN NO	ADDRESS
1	Segment a Anode	8	Segment b Anode
2	D-1 Common Cathode	9	D-5 Common Cathode
3	Segment f Anode	10	D-4 " "
4	" g "	11	D-3 " "
5	" c "	12	D-2 " "
6	" e "	13	dp 1 Anode
7	" d "	14	dp 2 "
		15	dp Common Cathode

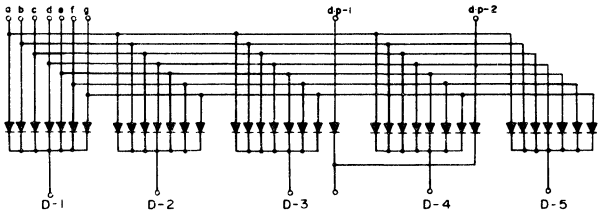

PY1500

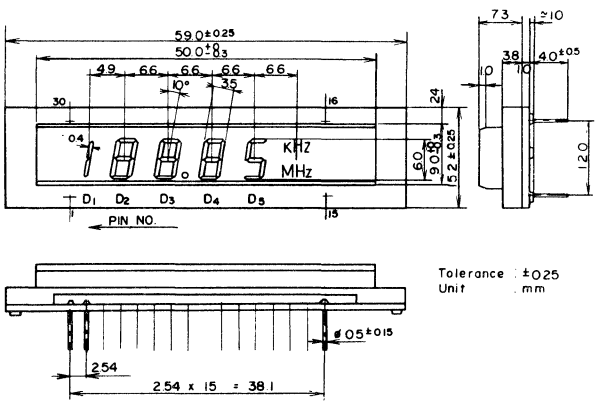

NO.	ADDRESS	NO.	ADDRESS	NO	ADDRESS
1	Common Cathode	11	D-d Anode	21	D4-f Anode
2	D_1-c Anode	12	D_4-c "	22	D3-g "
3	D_2-e "	13	D_4 g "	23	D_3-b "
4	D_2-d "	14	MHz "	24	D_3-a "
5	D_2-c "	15	MHz Cathode	25	D_3-f "
6	D_3-e "	16	KHz Anode	26	D_2-g "
7	D_3-d "	17	D_5 Cathode	27	D_2-b "
8	D_3-c "	18	D_5 Anode	28	D_2-a "
9	Dp	19	D_4-b "	29	D_2-f "
10	D_4-e	20	D_4-e "	30	D_1-b "

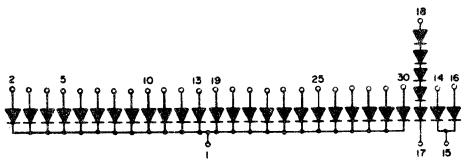

PY1501

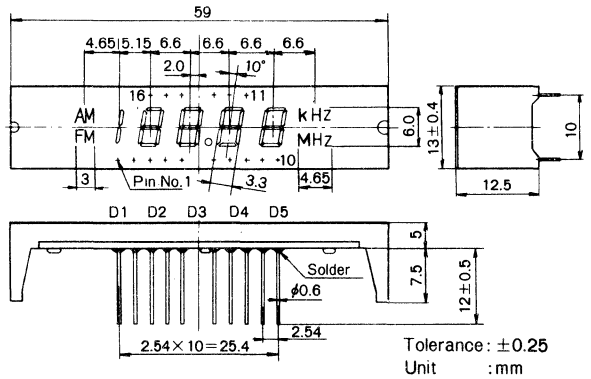

PIN NO.	ADDRESS	PIN NO.	ADDRESS	PIN NO.	ADDRESS
1	g Anode	7	b Anode	13	D4 Cathode
2	f //	8	a //	14	D3 //
3	e //	9	AM,kHz //	15	D2 //
4	Dp //	10	FM,MHz //	16	D1 //
5	d //	11	AM,FM,kHz,MHz Cathode		
6	c //	12	D5		

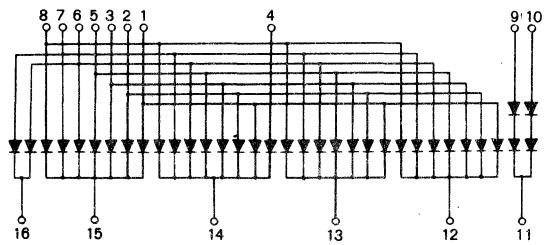

49. OUTLINE DRAWINGS

PY1504

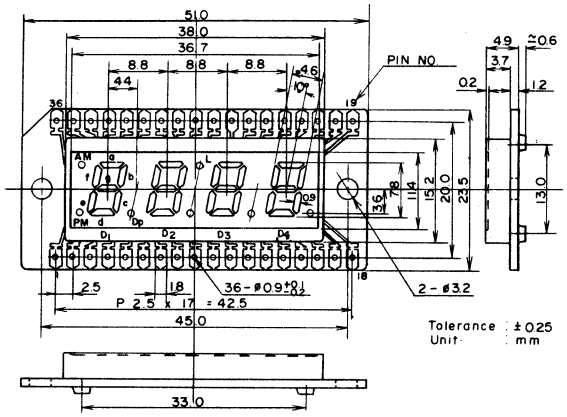

PIN NO.	ADDRESS	PIN NO.	ADDRESS	PIN NO.	ADDRESS
1	D_1 e Cathode	13	D_3 c Cathode	25	D_3 f Cathode
2	" d "	14	" Dp "	26	Common
3	" c "	15	D_4 e Cathode	27	L Cathode
4	" Dp "	16	" d "	28	D_2 b Cathode
5	D_2 g Cathode	17	" c "	29	" a "
6	" e "	18	" Dp "	30	" f "
7	" d "	19	" g "	31	D_1 b "
8	" c "	20	" b "	32	" a "
9	" Dp "	21	" a "	33	" f "
10	D_3 g Cathode	22	" f "	34	" g "
11	" e "	23	D_3 b "	35	AM Cathode
12	" d "	24	" a "	36	PM "

Com. Anode SL-1475-04, 2475-04

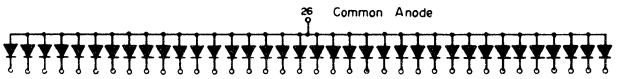

PY1505

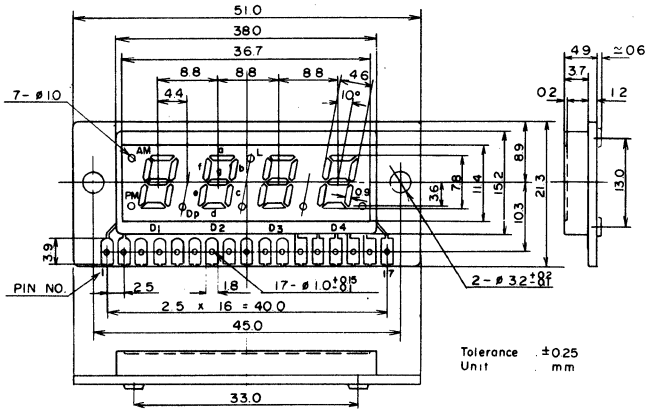

PIN NO.	ADDRESS	PIN NO.	ADDRESS
1	AM Anode	10	Dp Anode
2	PM "	11	L "
3	a "	12	AM PM Cathode
4	b "	13	D_1 "
5	c "	14	D_2 "
6	d "	15	L "
7	e "	16	D_3 "
8	f "	17	D_4 "
9	g "	18	

Com. Cathode SL-1012, 2012

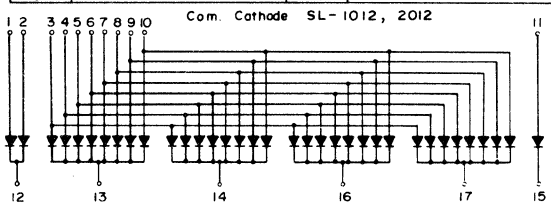

PY1506

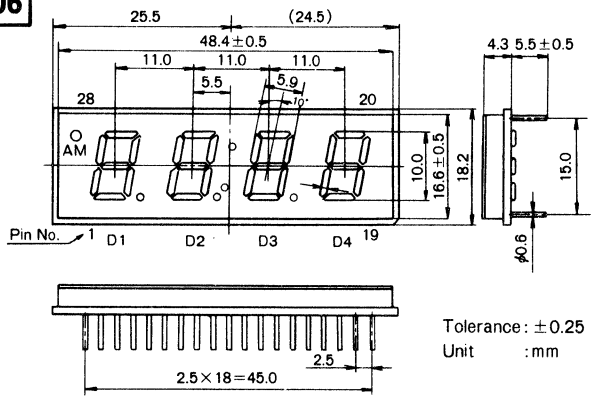

PIN NO.	ADDRESS	PIN NO.	ADDRESS	PIN NO.	ADDRESS
1	D1 e Cathode	13	D3 c Cathode	26	D3 a Cathode
2	// d //	14	// Dp //	27	// f //
3	// c //	15	// Common Anode	28	Colon //
4	// Dp //	16	D4 e Cathode	29	D2 b //
5	// Common Anode	17	// d //	30	// g //
6	D2 e Cathode	18	// c //	31	// a //
7	// d //	19	// Common Anode	32	// f //
8	// c //	20	// b Cathode	33	D1 b //
9	// Dp //	21	// g //	34	// g //
10	D2, Colon, Common Anode	22	// a //	35	// a //
		23	// f //	36	// f //
11	D3 e Cathode	24	D3 b //	37	AM Anode
12	// d //	25	// g //	38	AM Cathode

Common Anode

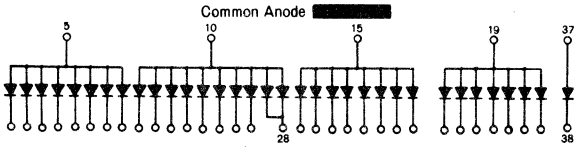

PY1507

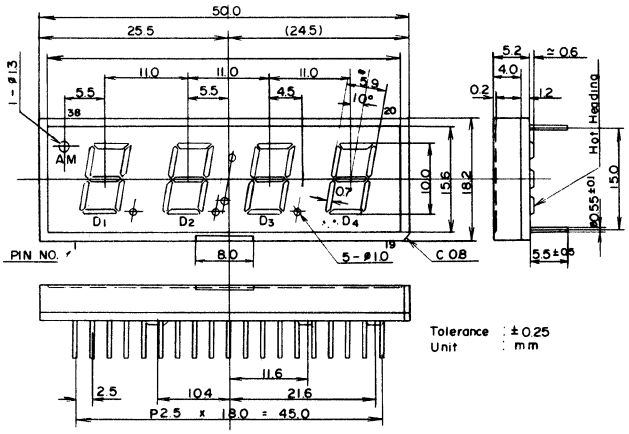

PIN NO.	ADDRESS	PIN NO.	ADDRESS	PIN NO.	ADDRESS
1	D_1 e Anode	14	D_3 Dp Anode	27	D_3 f Anode
2	" d "	15	" Common Cathode	28	L_1L_2 "
3	" c "	16	D_4 e Anode	29	D_2 b "
4	" Dp "	17	" d "	30	" g "
5	" Common Cathode	18	" c "	31	" a "
6	D_2 e Anode	19	" Common Cathode	32	" f "
7	" d "	20	" b Anode	33	D_1 b "
8	" c "	21	" g "	34	" g "
9	" Dp "	22	" a "	35	" a "
10	$L_1L_2D_2$ Common Cathode	23	" f "	36	" f "
11	D_3 e Anode	24	D_3 b "	37	AM Common Cathode
12	" d "	25	" g "	38	AM Anode
13	" c "	26	" a "		

Com. Cathode

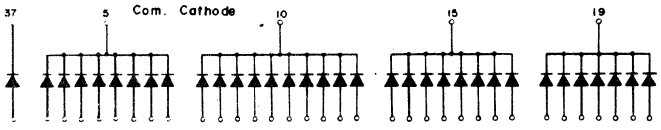

49. OUTLINE DRAWINGS

PY1508

PY1509

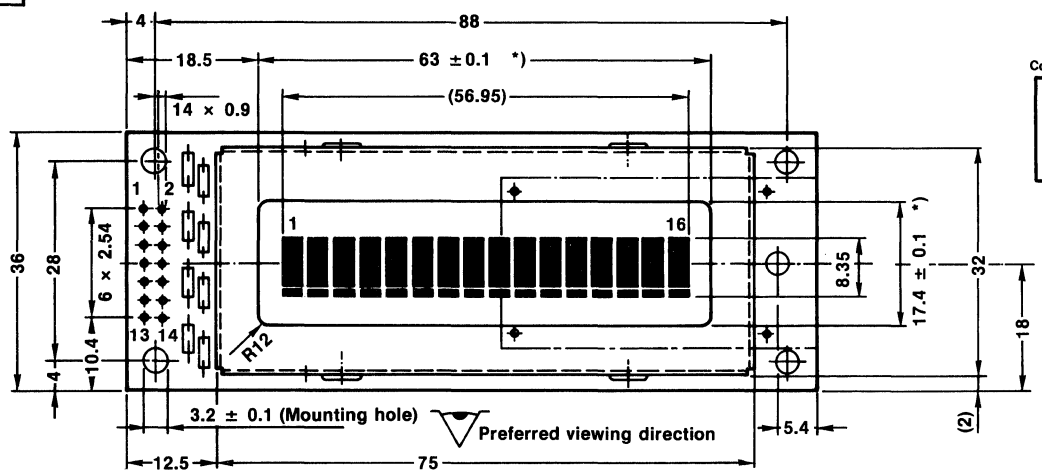

Connecting point assignments

DB 7	1	2	DB 6
DB 5	3	4	DB 4
DB 3	5	6	DB 2
DB 1	7	8	DB 0
E	9	10	R/W
RS	11	12	– Vs
VCC	13	14	GND

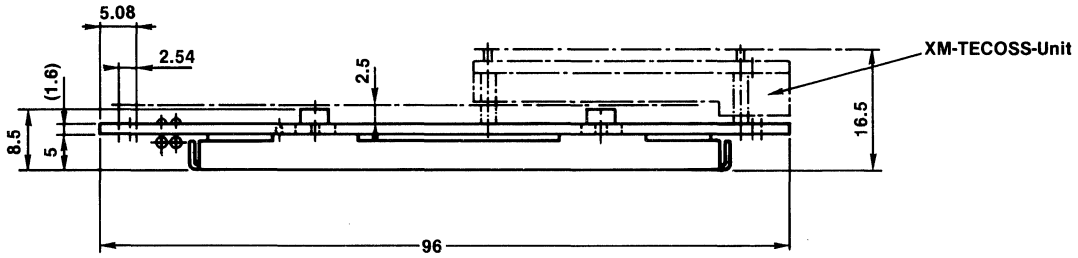

49. OUTLINE DRAWINGS

PY1510

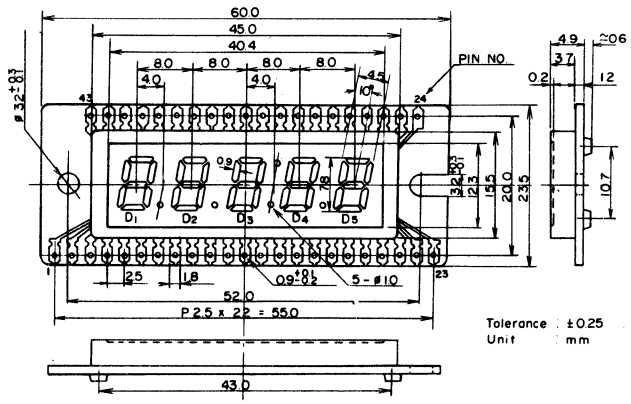

PIN NO.	ADDRESS	PIN NO.	ADDRESS	PIN NO.	ADDRESS
1	D1 g Anode	16	D4 e Anode	31	L2 Anode
2	" e "	17	" d "	32	L1 "
3	" d "	18	" c "	33	D3 b Anode
4	" c "	19	" Dp "	34	" a "
5	" Dp "	20	D5 g "	35	" f "
6	D2 g "	21	" e "	36	D2 D3 L1 L2 Cathode
7	" e "	22	" d "	37	D2 b Anode
8	" d "	23	" c "	38	" a "
9	" c "	24	" b "	39	" f "
10	" Dp "	25	" a "	40	D1 Common Cathode
11	D3 g "	26	" f "	41	D1 b Anode
12	" e "	27	D4 D5 Common Cathode	42	" a "
13	" d "	28	D4 b Anode	43	" f "
14	" c "	29	" a "		
15	D4 g "	30	" f "		

Com. Cathode SL-1524, 2524

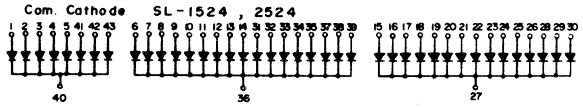

PY1511

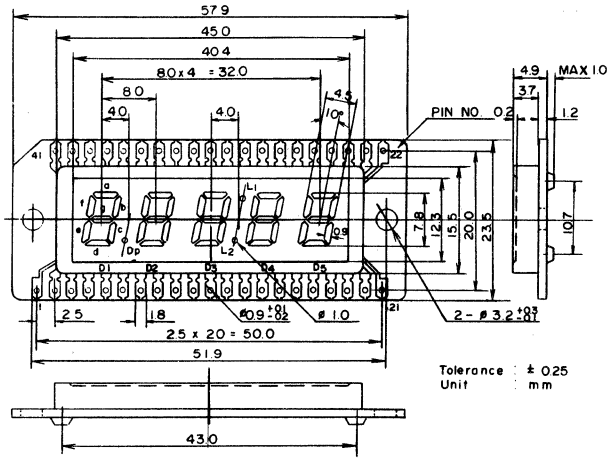

PIN NO.	ADDRESS	PIN NO.	ADDRESS	PIN NO.	ADDRESS
1	Cathode g1	15	Cathode c4	29	Cathode L2
2	" e1	16	" d4	30	" L1
3	" d1	17	" c4	31	" b3
4	" c1	18	" g5	32	" a3
5	" Dp	19	" e5	33	" f3
6	" g2	20	" d5	34	Anode D2 D3 L1 L2
7	" e2	21	" c5	35	Cathode b2
8	" d2	22	" b5	36	" a2
9	" c2	23	" a5	37	" f2
10	" g3	24	" f5	38	Anode D1, Dp
11	" e3	25	Anode D4 D5	39	Cathode b1
12	" d3	26	Cathode b4	40	" a1
13	" c3	27	" a4	41	" f1
14	" g4	28	" f4		

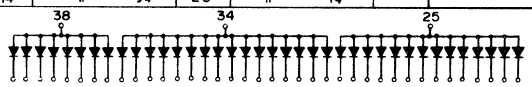

PY1512

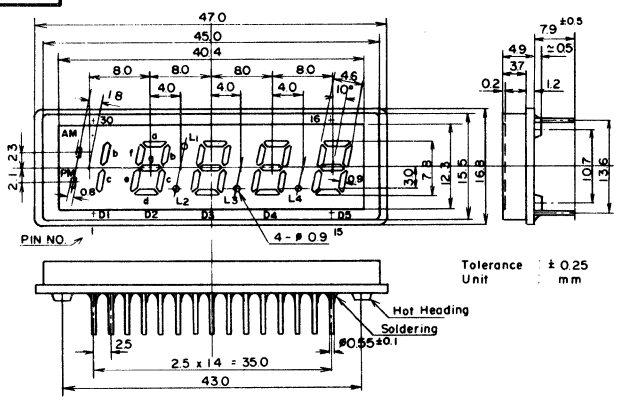

PIN NO.	ADDRESS	PIN NO.	ADDRESS
1	PM Anode	16	D5 g Anode
2	NO Pin	17	D5 b,e Anode
3	L1 Anode	18	D5 Common Cathode
4	L2 "	19	L4 Anode
5	D2 ~ D4 e Anode	20	L4 Cathode
6	" a "	21	L3 Cathode
7	D1 ~ D4 b "	22	D4 Common Cathode
8	D2 ~ D4 f "	23	D3 " "
9	D1 ~ D4 c "	24	L1 Cathode
10	D2 ~ D4 g "	25	D2 Common Cathode
11	" d "	26	D1 " "
12	L3 Anode	27	L2 Cathode
13	NO Pin	28	NO Pin
14	NO Pin	29	AM, PM Cathode
15	D5 a, c, d, f, Anode	30	AM Anode

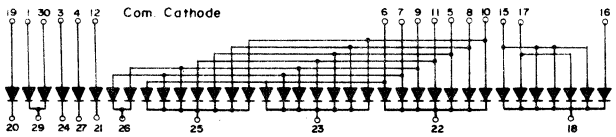

PY1513

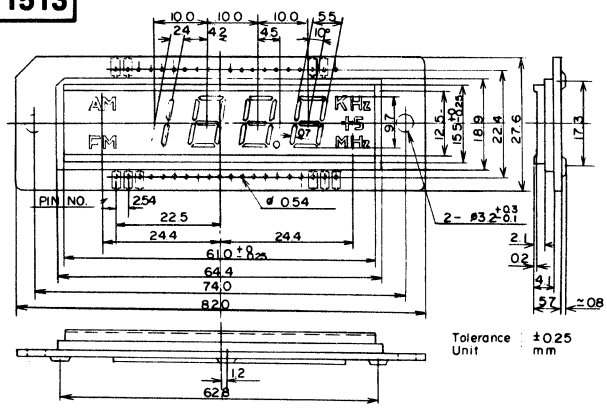

PIN NO	ADDRESS	PIN NO	ADDRESS	PIN NO	ADDRESS
1	D1 c Cathode	15	Dp Anode	29	D4 a Cathode
2	" b "	16	D4 e Cathode	30	D4 Common Anode
3	D2 a "	17	" d "	31	D3 b Cathode
4	" f "	18	" c "	32	" f "
5	" e "	19	" g "	33	" a "
6	" d "	20	" b "	34	D3 Common Anode
7	" c "	21	N.C	35	D2 " "
8	" g "	22	MHz Anode	36	D1 " "
9	" b "	23	+5 "	37	FM Anode
10	D3 e	24	KHz "	38	AM "
11	" d "	25	KHz Cathode	39	AM Cathode
12	" c "	26	+5 "	40	FM "
13	" g "	27	MHz "		
14	Dp Cathode	28	D4 f "		

Com. Anode

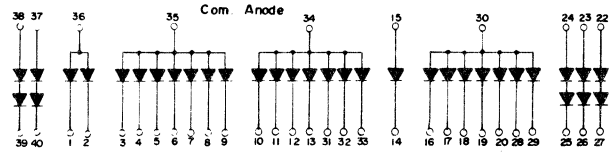

49. OUTLINE DRAWINGS

PY1514

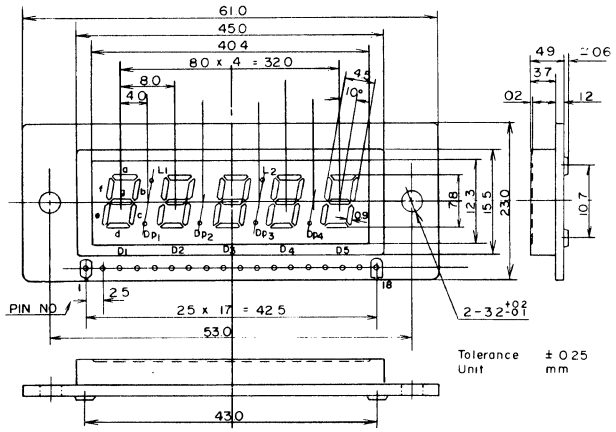

PIN NO.	ADDRESS	PIN NO.	ADDRESS
1	L1 Anode	11	L2 Anode
2	a "	12	Dp3 "
3	b "	13	Dp4 "
4	c "	14	D1 L1 Dp1 Cathode
5	d "	15	D2 Dp2 "
6	e "	16	D3 L2 Dp3 "
7	f "	17	D4 Dp4 "
8	g "	18	D5
9	Dp1 "		
10	Dp2 "		

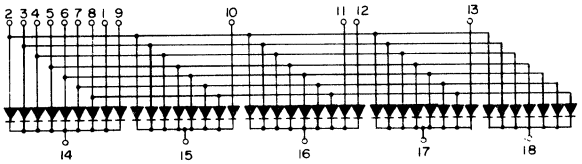

PY1515

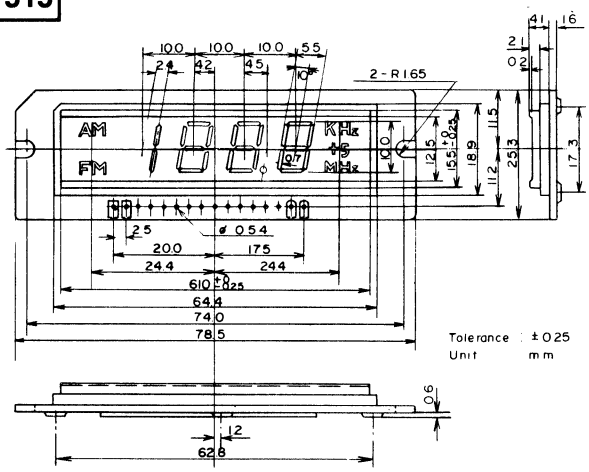

PIN NO.	ADDRESS	PIN NO	ADDRESS
1	AM FM D Common Cathode	9	d Anode
2	D2 " "	10	e "
3	D3 " "	11	f "
4	D4 " "	12	g "
5	KHz, +5, MHz " "	13	Dp "
6	a Anode	14	AM KHz "
7	b "	15	+5 "
8	c "	16	FM, MHz "

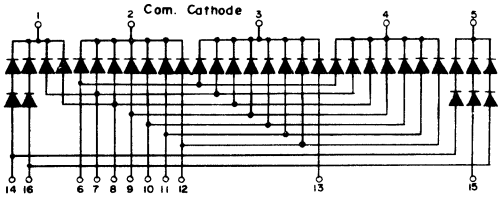

PY1516

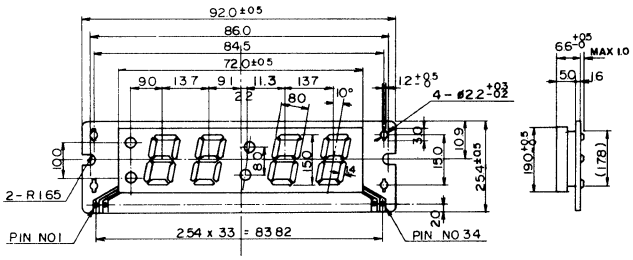

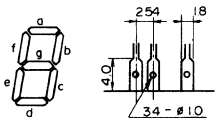

Tolerance ±0.25
Unit mm

Note 1
Film Slip Out
Tolerance ±0.5

PIN NO	ADDRESS	PIN NO	ADDRESS	PIN NO	ADDRESS
1	Common Cathode	13	Hour A Anode	25	10'S Min. E Anode
2	PM Anode	14	" B "	26	" C "
3	AM "	15	" E "	27	Min. F "
4	10'S Hour A "	16	" D "	28	" G "
5	" F "	17	" C "	29	" A "
6	" G "	18	Upper Colon "	30	" B "
7	" E "	19	Lower Colon "	31	" E "
8	" D "	20	10'S Min. F "	32	" D "
9	" C "	21	" G "	33	" C "
10	" B "	22	" A "	34	Common Cathode
11	Hour F "	23	" B "		
12	" G "	24	" D "		

Com. Cathode

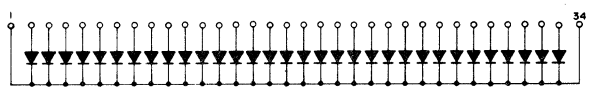

PY1517

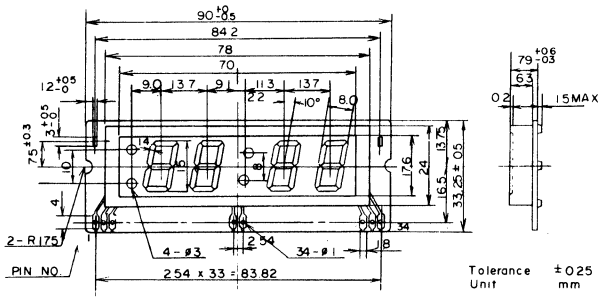

PIN NO.	ADDRESS	PIN NO.	ADDRESS	PIN NO	ADDRESS
1	Colon (left) Common Anode	13	Hour A Cathode	25	10's Min E Cathode
2	P M Cathode	14	" B "	26	" C "
3	A M "	15	" E "	27	Minute F "
4	10's Hour A Cathode	16	" D "	28	" G "
5	" F "	17	" C "	29	" A "
6	" G "	18	Upper Colon Cathode	30	" B "
7	" E "	19	Lower Colon Cathode	31	" E "
8	" D "	20	10's Min F Cathode	32	" D "
9	" C "	21	" G "	33	" C "
10	" B "	22	" A "	34	Colon (right) Common Anode
11	Hour F "	23	" B "		
12	" G "	24	" D "		

Com Anode

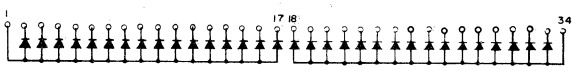

49. OUTLINE DRAWINGS

PY1518

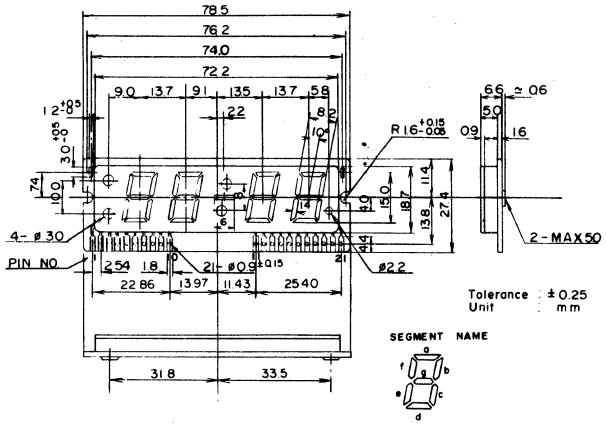

PIN NO	ADDRESS	PIN NO	ADDRESS
1	AM Anode	12	Minus Anode
2	AM, PM Cathode	13	Colon Common Cathode
3	PM Anode	14	d Anode
4	f "	15	c "
5	Unit Hour Common Cathode	16	Unit Minute Common Cathode
6	g Anode	17	Alarm Anode
7	10's Hour Common Cathode	18	Alarm Cathode
8	e Anode	19	b Anode
9	Upper Colon Anode	20	10's Minute Common Cathode
10	Lower " "	21	a Anode
11	Minus Cathode		

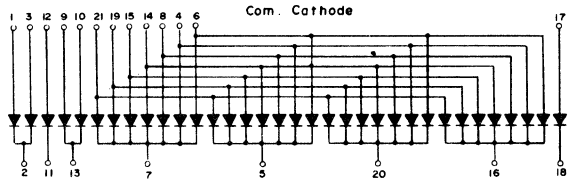

PY1519

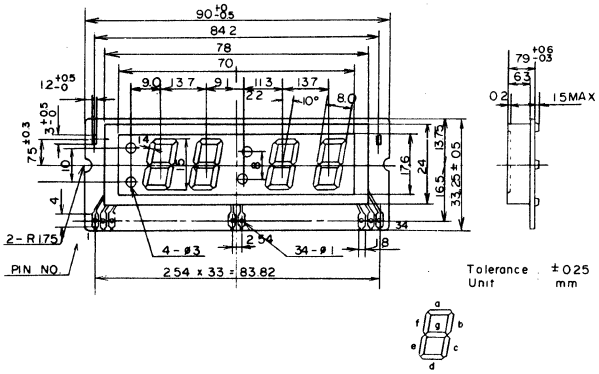

PIN NO	ADDRESS	PIN NO	ADDRESS	PIN NO	ADDRESS
1	Colon (left) Common Anode	13	Hour A Cathode	25	10's Min E Cathode
2	PM Cathode	14	" B "	26	" C "
3	AM "	15	" E "	27	Minute F "
4	10's Hour A Cathode	16	" D "	28	" G "
5	" F "	17	" C "	29	" A "
6	" G "	18	Upper Colon Cathode	30	" B "
7	" E "	19	Lower Colon Cathode	31	" E "
8	" D "	20	10's Min F Cathode	32	" D "
9	" C "	21	" G "	33	" C "
10	" B "	22	" A "	34	Colon (right) Common Anode
11	Hour F "	23	" B "		
12	" G "	24	" D "		

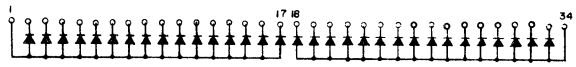

PY1520

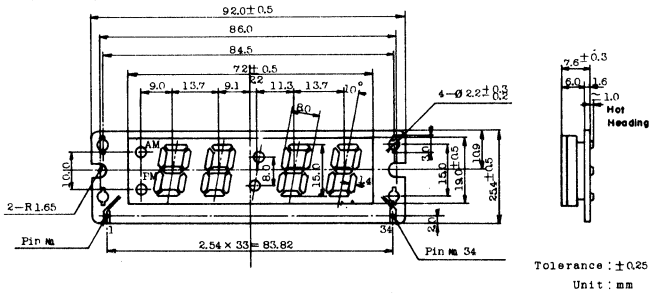

Segment Name

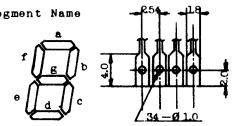

Type	Fully Displayed Font
SL-1490-11L SL-2490-11L	
SL-1490-14L SL-2490-14L	
SL-1490-10L SL-2490-10L	

Pin Connection

Pin No.	Address	Pin No.	Address	Pin No.	Address
1	Common per All	13	Unit Hour a	25	10'S Min. e
2	PM dot	14	b	26	" c
3	AM dot	15	e	27	" f
4	10'S Hour a	16	d	28	" g
5	" f	17	c	29	" a
6	" g	18	Upper Colon	30	" b
7	" e	19	Lower Colon	31	" e
8	" d	20	10'S Min. f	32	" d
9	" c	21	" g	33	" c
10	" b	22	" a	34	Common per All
11	Unit Hour f	23	" b		
12	" g	24	" d		

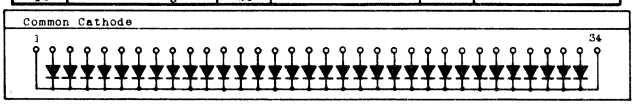

PY1521

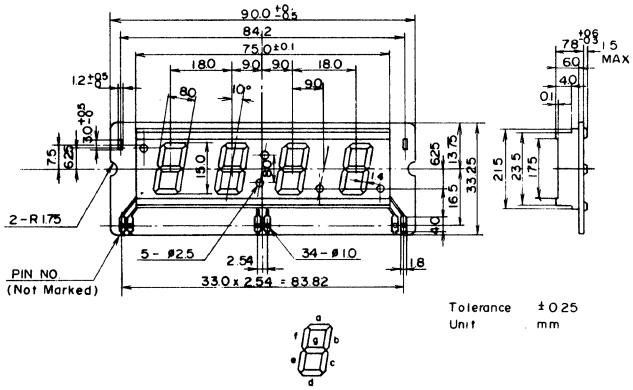

PIN NO.	ADDRESS	PIN NO.	ADDRESS	PIN NO.	ADDRESS
1	Common Anode	13	Unit Hour d Cathode	25	10'S Min b Cathode
2	dp 1	14	" c "	26	Unit Min a "
3	10'S Hour a Cathode	15	" g "	27	" f "
4	" f "	16	" b "	28	" e "
5	" e "	17	Lower Colon "	29	" d "
6	" d "	18	Upper Colon "	30	" c "
7	" c "	19	10'S Min a Cathode	31	" g "
8	" g "	20	" f "	32	" b "
9	" b "	21	" e "	33	dp 3
10	Unit Hour a "	22	" d "	34	dp 2
11	" f "	23	" c "	35	
12	" e "	24	" g "	36	

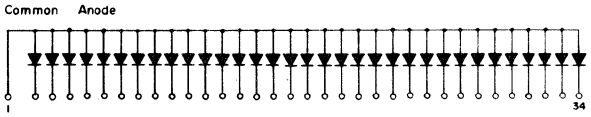

49. OUTLINE DRAWINGS

PY1522

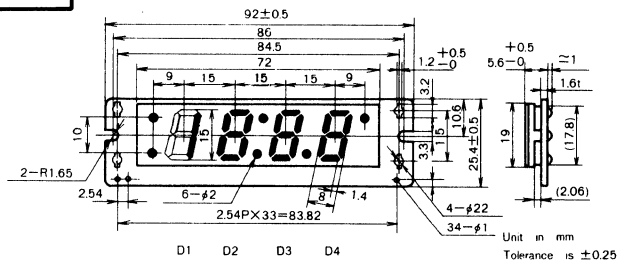

PIN NO.	ADDRESS	PIN NO.	ADDRESS
1	Common Anode	19	D-3 ■ Cathode
2	AM Cathode	20	// F //
3	PM //	21	// E //
4	N.C	22	// D //
5	N.C	23	// C //
6	N.C	24	// B //
7	N.C	25	// A //
8	D-1 C Cathode	26	Dot 1 //
9	// B //	27	D-4 ■ //
10	N.C	28	// F //
11	D-2 ■ Cathode	29	// E //
12	// F //	30	// D //
13	// E //	31	// C //
14	// D //	32	// B //
15	// C //	33	// A //
16	// B //	34	Dot 2 //
17	// A //		
18	Colon //		

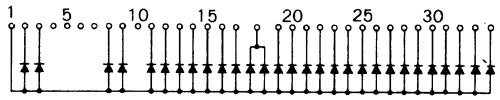

PY1523

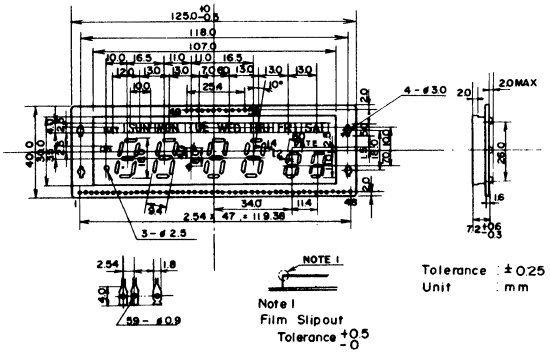

PIN NO	ADDRESS	PIN NO	ADDRESS	PIN NO	ADDRESS	PIN NO	ADDRESS
1	AM.PM.10'S Hour Hour, Upper Colon Lower Colon Common Cathode	14	Hour B Anode	29	Min B Anode	44	Day C Anode
		15	" D "	30	" E "	45	" B "
		16	" C "	31	" D "	46	" A "
2	PM Anode	17	" E "	32	" C "	47	10'S Day, Day Common Cathode
3	AM "	18	Upper Colon "	33	10 S Day F "	48	10'S Min, Min Common Cathode
4	10 S Hour A Anode	19	Lower Colon "	34	" G "	49	Week Common Cathode
5	" F "	20	10 S Min. F "	35	" E "	50	SUN Anode
6	" G "	21	" G "	36	" D "	51	MON. "
7	" E "	22	" A+D "	37	" C "	52	TUE. "
8	" D "	23	" B "	38	" B "	53	WED. "
9	" C "	24	" E "	39	" A "	54	THU. "
10	" B "	25	" C "	40	Day F "	55	FRI. "
11	Hour F Anode	26	Min. F "	41	" G "	56	SAT. "
12	" G "	27	" G "	42	" E "	57-59	N.C
13	" A "	28	" A "	43	" D "		

Com. Cathode.

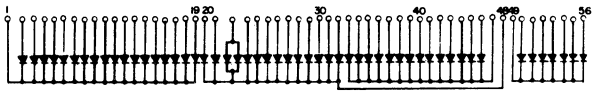

PY1524

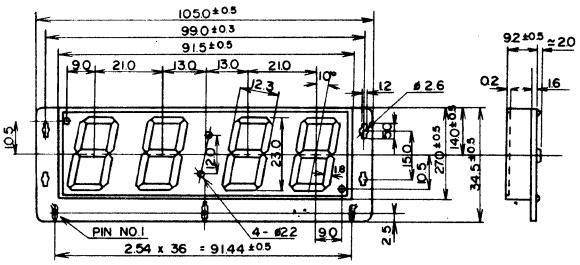

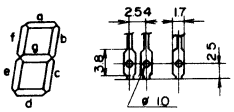

Tolerance : ±0.25
Unit : mm

PIN NO	ADDRESS	PIN NO	ADDRESS	PIN NO	ADDRESS	PIN NO	ADDRESS
1	AM PM	11	10'S Hour B	21	Lower Colon	31	Unit Min A
2	AM PM Hour Common	12	Unit Hour F	22	10'S Min F	32	" B
3	N. C	13	" G	23	" G	33	" E
4	N. C	14	" A	24	" A	34	" D
5	10'S Hour A	15	" B	25	" B	35	" C
6	" F	16	" E	26	" D	36	Colons 10'S Min. Unit Min Alarm/ Sleep Common
7	" G	17	" D	27	" E		
8	" E	18	N.C	28	" C		
9	" D	19	Unit Hour C	29	Unit Min F	37	Alarm / Sleep
10	" C	20	Upper Colon	30	" G		

Common Anode

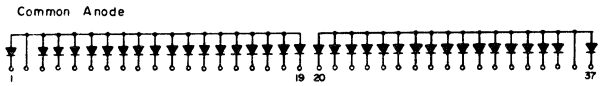

PY1525

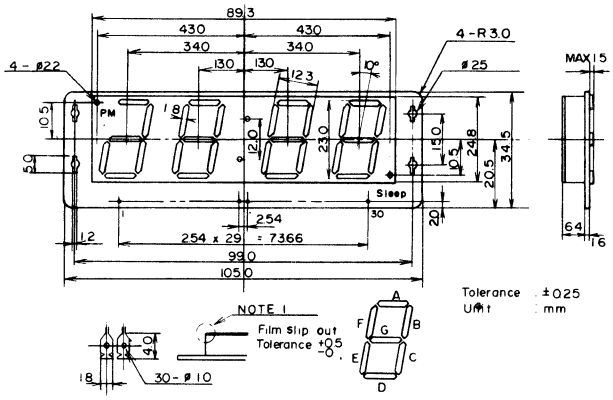

PIN NO	ADDRESS	PIN NO	ADDRESS	PIN NO	ADDRESS
1	PM 10's Hour A, D Unit Hour D, E, F, G, Colon, 10'S Min A, B, C, & Unit Min D, E, F, G Common Anode	6	10's Hour B Cathode	16	10's Min B G Cathode
		7	" A G "	17	" C D "
		8	" D E "	18	10's Min E & Unit Min E Cathode
29		9	10's Hour C & Unit Hour E Cathode	19	Unit B G Cathode
2	10's Hour B, C, E, G Unit Hour A, B, C & 10'S Min D, E, F, G Unit Min A, B, C Common Anode	10	Unit Hour B G Cathode	20	Unit Min C D Cathode
26		11	N C	21	" A F "
		12	Unit Hour C D Cathode	22,23,24,25	N C
3	N C	13	" A F "	27	Sleep Cathode
4	N C	14	N C	28	Sleep Common Anode
5	PM Cathode	15	10's Min A F Cathode	30	Colon Cathede

Com Anode

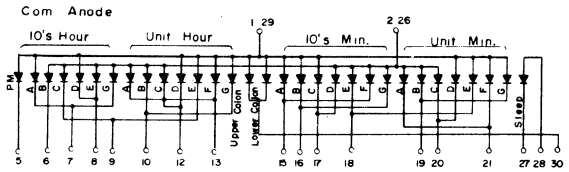

49. OUTLINE DRAWINGS

PY1526

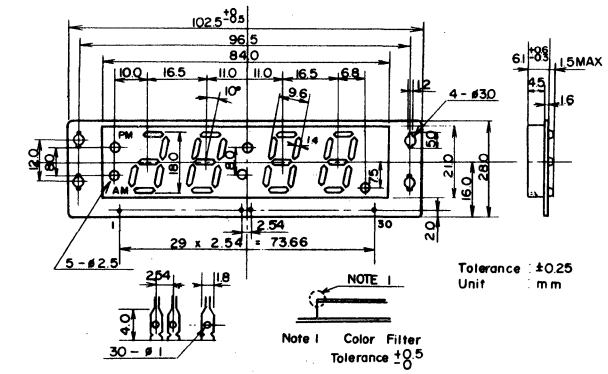

PIN NO.	ADDRESS	PIN NO.	ADDRESS	PIN NO.	ADDRESS
1 · 29	PM 10'S Hour A.D Unit Hour D,E,F,G Colon 10'S Min, A,B,C Unit Min. D,E,F,G Common Cathode	6	10'S Hour B Anode	16	10'S Min. B.G Anode
		7	" A.G "	17	" C.D "
		8	" D.E "	18	10'S Min. E Unit Min. E Anode
2 · 26	10'S Hour B,C,F,G Unit Hour A,B,C 10'S Min. D,E,F,G Unit Min. A,B,C Common Cathode	9	10'S Hour C Unit Hour E Anode	19	Unit B.G Anode
		10	Unit Hour B.G Anode	20	Unit Min. C.D Anode
		11	N.C	21	Unit Min. A.F Anode
		12	Unit Hour C.D Anode	22.23.24.25	N.C
3	AM Common Cathode	13	" A.F "	27	Sleep Anode
4	AM Anode	14	N.C	28	Sleep Common Cathode
5	PM Anode	15	10'S Min. A.F Anode	30	Colon Anode

Com. Cathode SL-1052T

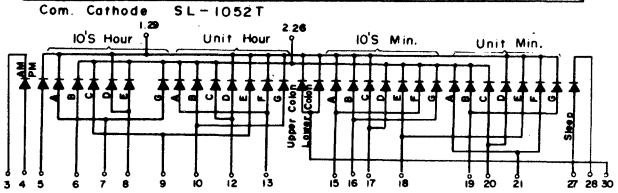

PY1527

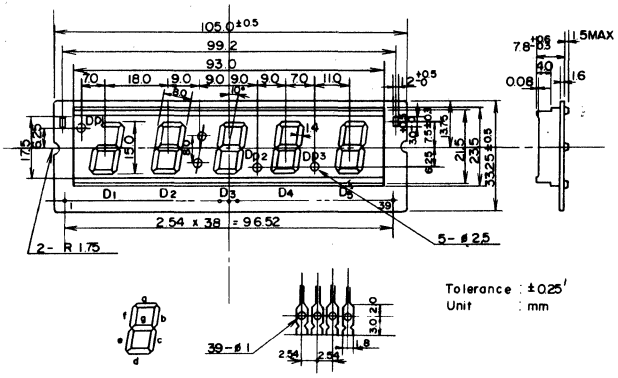

PIN NO.	ADDRESS	PIN NO.	ADDRESS	PIN NO.	ADDRESS
1	Common	14	Upper Colon	27	D_4 C
2	Dp 1	15	Lower Colon	28	D_4 G
3	D_1 A+G+D	16	D_3 A	29	D_4 B
4	D_1 E	17	D_3 F	30	Dp 3
5	D_1 C	18	D_3 E	31	D_5 B
6	D_1 B	19	D_3 D	32	D_5 E
7	D_2 A	20	D_3 C	33	D_5 G
8	D_2 F	21	D_3 G	34	D_5 D
9	D_2 E	22	D_3 B	35	D_5 C
10	D_2 D	23	D_4 A	36	D_5 A
11	D_2 C	24	D_4 F	37	D_5 F
12	D_2 G	25	D_4 E	38	Dp 2
13	D_2 B	26	D_4 D	39	Common

Common Cathode SL-1562, 2562

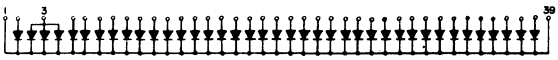

PY1528

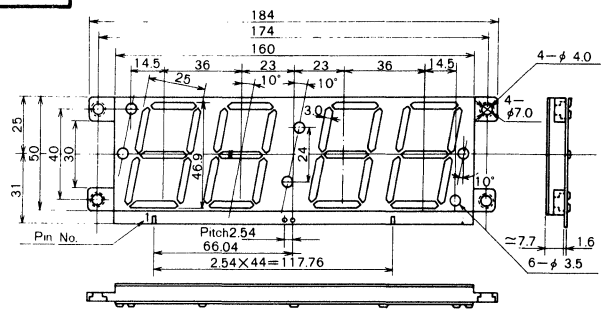

Unit in mm

Tolerance is ±0.5

TYPE	FULLY DISPLAYED FONT		
SL-1066-31T	88:88.		
SL-1066-26T	18:88.	SL-1066-27T	18:88.

Pin No.	Connection	Pin No.	Connection	Pin No.	Connection
1	D.p.1 Anode	16	Unit Hour E	32	10's Min. B
2	D.p.1 Cathode	17	" D	33	" E
3	PM Colon	18	" C	34	" D
4	PM Colon Hour Colon	19	Lower Colon	35	" C
		20	N.C.	36	Unit Min. F
5	10's Hour E	21	N.C.	37	" ■
6	" D	22	N.C.	38	" A
7	" C	23	N.C.	39	" B
8	" ■	24	N.C.	40	" E
9	" F	25	N.C.	41	" D
10	" B	26	N.C.	42	" C
11	" A	27	N.C.	43	Alarm1,2 Upper, Lower Colon, Min. Common
12	Unit Hour F	28	Upper Colon		
13	" ■	29	10's Min. F		
14	" A	30	" ■	44	Alarm
15	" B	31	" A	45	Alarm

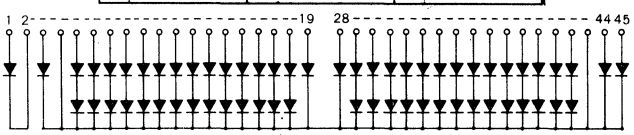

PY1529

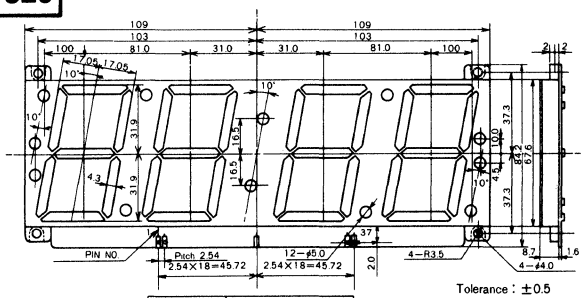

TYPE	FULLY DISPLAYED FONT		
SL-1086-53T	:88:88.	SL-1086-31T	:88:88.
SL-1086-27T	18:88.	SL-1086-26T	18:88.

PIN CONNECTION(SL-1086-53T)

Pin No.	Connection	Pin No.	Connection	Pin No.	Connection
1	DP1 Anode	13	Unit Hour ■	26	10's Min D
2	DP1 Cathode	14	// A	27	// C
3	PM Colon	15	// B	28	Unit Min F
4	PM Colon Hour Cojon	16	// E	29	// ■
		17	// D	30	// A
5	10's Hour E	18	// C	31	// B
6	// D	19	Lower Colon	32	// E
7	// C	20	Upper Colon	33	// D
8	// ■	21	10's Min. F	34	// C
9	// F	22	// ■	35	Alarm1,2 UPPer, Lower Colon, Min. Common
10	// B	23	// A		
11	// A	24	// B	36	Alarm 1
12	Unit Hour F	25	// E	37	Alarm 2

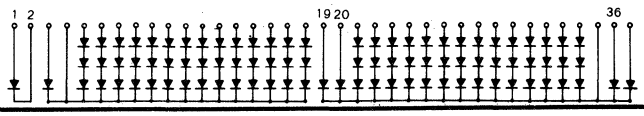

49. OUTLINE DRAWINGS

PY1530

PIN CONNECTIONS

Pin	Connection
1	Channel No. 1 Anode
2	Phase 1 Cathode
3	Phase 3 Cathode
4	Reset Cathode
5	Keep Alive Anode
6	Keep Alive Cathode
7	Phase 2 Cathode
8	Channel No. 2 Anode

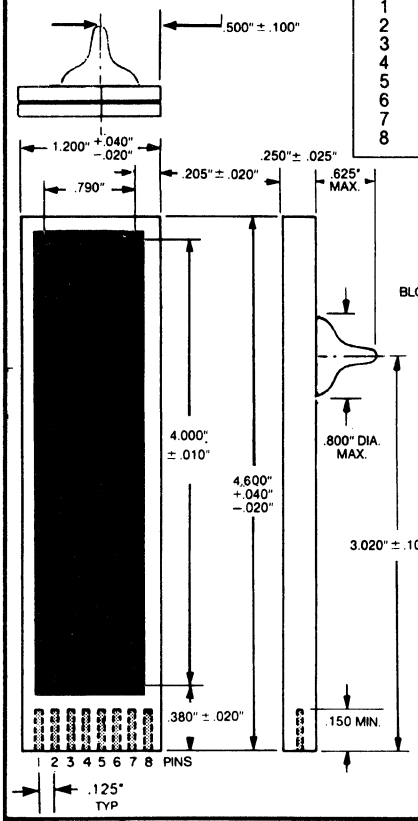

BLOCK DIAGRAM OF TYPICAL DRIVE CIRCUIT

PY1532

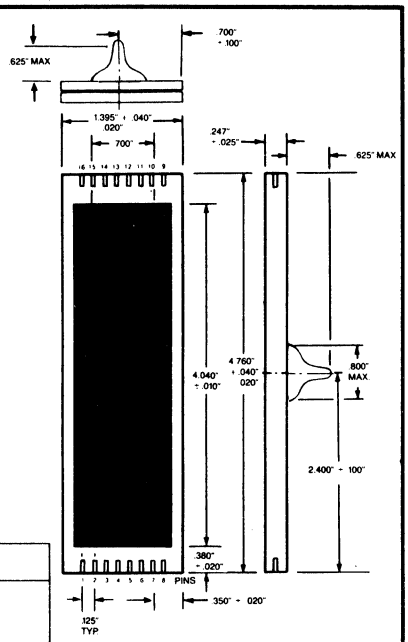

PIN CONNECTIONS

Pin	Connection
1	Anode
2	Phase R (Top)
3	Phase 1
4	Phase R (Bot)
5	Phase 2
6	Keep Alive K
7	Keep Alive A
8	Phase 3
9	Anode
10	Phase R (Top)
11	Phase 1
12	Phase R (Bot)
13	Phase 2
14	Keep Alive K
15	Keep Alive A
16	Phase 3

PY1539

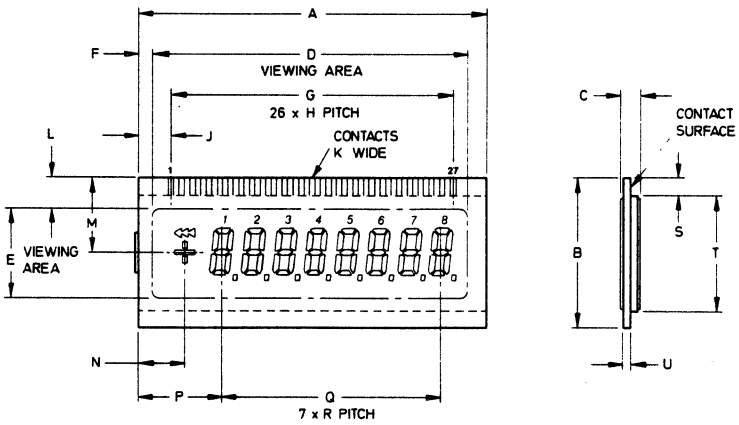

Ref	Millimetres	Inches	Ref	Millimetres	Inches	Ref	Millimetres	Inches
A	51.3	2.020	H	1.60	0.063	Q	32.2	1.268
B	22.0	0.866	J	4.85	0.191	R	4.60	0.181
C	3.0 max	0.118 max	K	0.80	0.031	S	2.5	0.098
D	46.3 min	1.823 min	L	4.5	0.177	T	17.0	0.669
E	13.0 min	0.512 min	M	11.0	0.433	U	1.1	0.043
F	2.0 max	0.079 max	N	6.82	0.269			
G	41.6	1.638	P	12.22	0.481			

49. OUTLINE DRAWINGS

PY1531

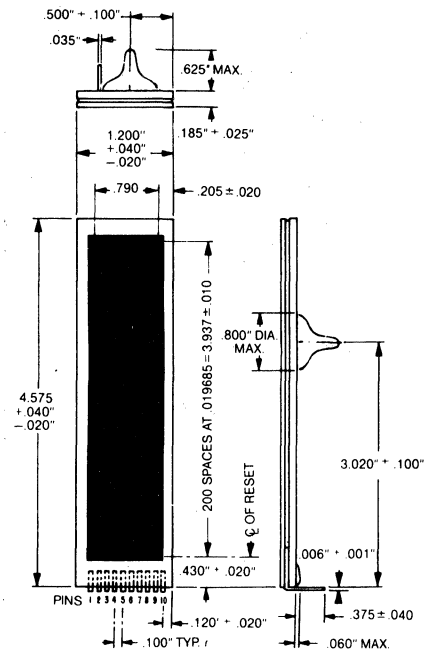

OUTLINE DRAWING

PIN CONNECTIONS

Pin	Connection
1	Channel No. 1 Anode
2	Phase 2 Cathode
3	Phase 1 Cathode
4	Reset Cathode
5	Keep-Alive Anode
6	Keep-Alive Cathode
7	Phase 4 Cathode
8	Phase 3 Cathode
9	Phase 5 Cathode
10	Channel No. 2 Anode

PY1533

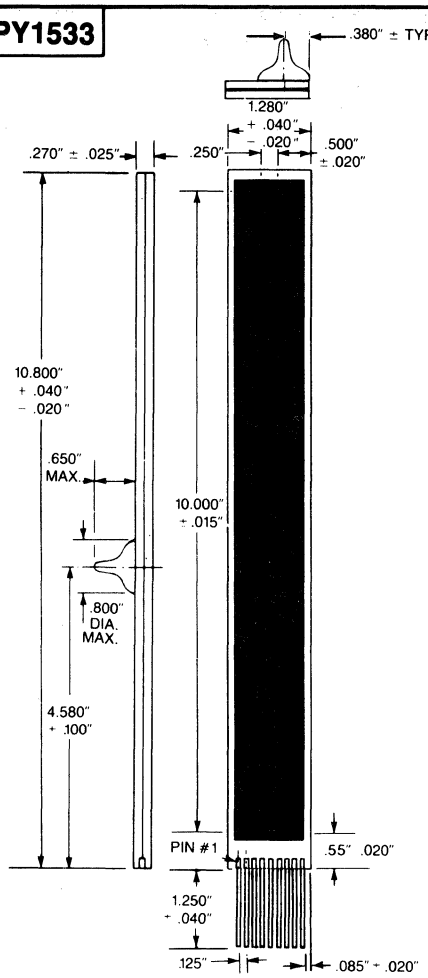

BLOCK DIAGRAM OF TYPICAL DRIVE CIRCUIT

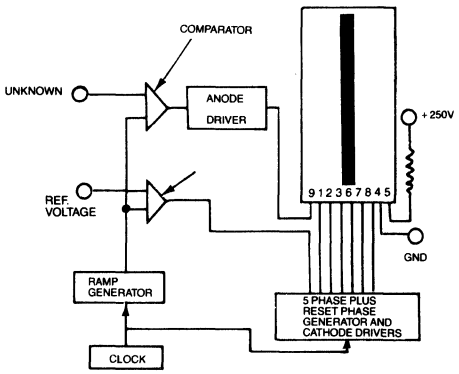

PIN CONNECTIONS

Pad No.	Connection
1	Phase 1
2	Phase 5
3	Reset
4	Keep Alive Cathode
5	Keep Alive Anode
6	Phase 2
7	Phase 4
8	Phase 3
9	Display Anode

PY1534

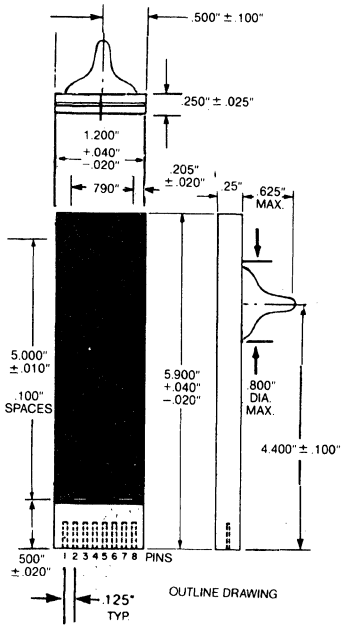

OUTLINE DRAWING

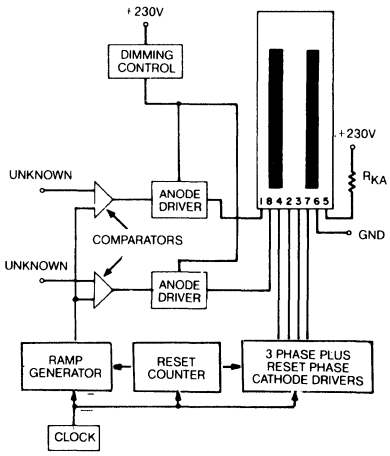

TYPICAL DRIVE CIRCUIT

PIN CONNECTIONS

Pin	Connection
1	Channel No. 1 Anode
2	Phase 1 Cathode
3	Phase 3 Cathode
4	Reset Cathode
5	Keep Alive Anode
6	Keep Alive Cathode
7	Phase 2 Cathode
8	Channel No. 2 Anode

49. OUTLINE DRAWINGS

PY1535

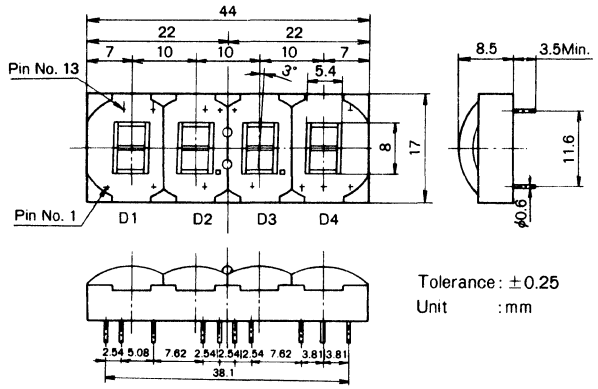

Tolerance: ±0.25
Unit : mm

PIN NO.	ADDRESS	PIN NO.	ADDRESS
1	f Cathode	8	a Cathode
2	e //	9	D3 Anode
3	d //	10	Dp_1 Cathode
3	c //	11	D2 Anode
5	Dp_2 //	12	D1 //
6	g //	13	D4 //
7	b //		

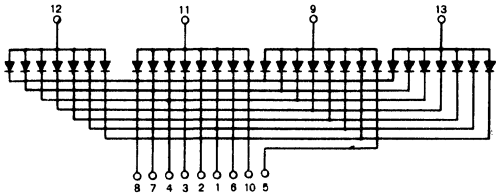

PY1536

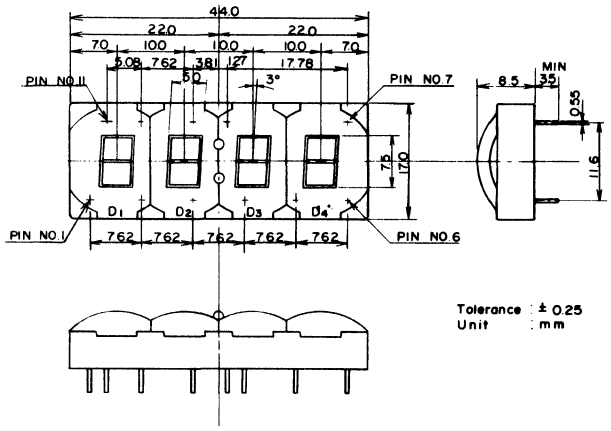

Tolerance : ± 0.25
Unit : mm

PIN NO.	ADDRESS	PIN NO.	ADDRESS
1	Anode f	7	Anode a
2	" e	8	Cathode D3
3	" d	9	" D2
4	" c	10	" D1
5	" g	11	" D4
6	" b	12	

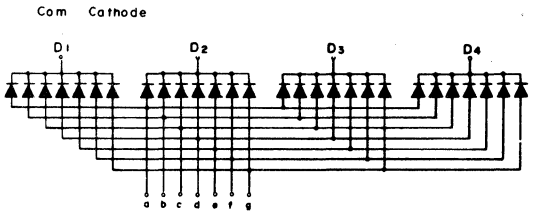

PY1538

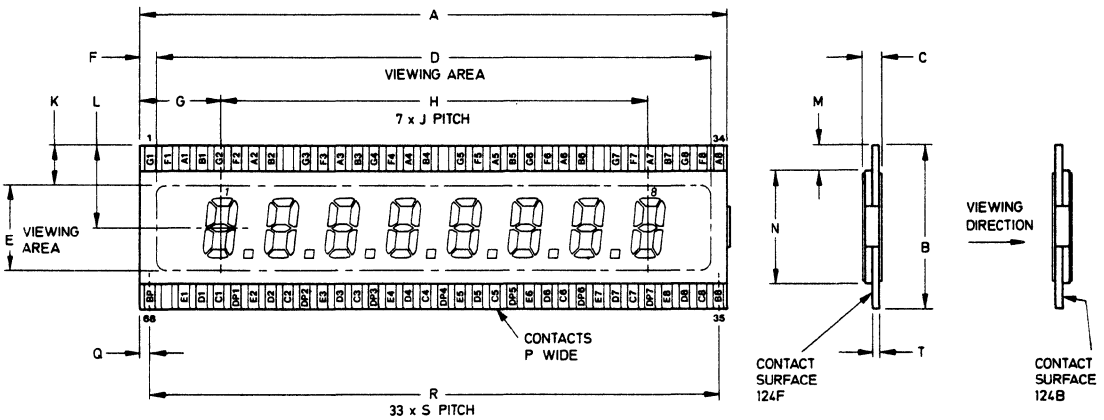

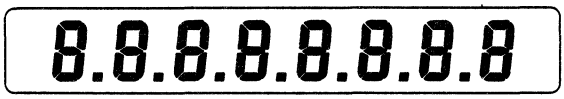

Ref	Millimetres	Inches	Ref	Millimetres	Inches	Ref	Millimetres	Inches
A	86.36	3.400	G	11.68	0.460	N	16.51	0.650
B	24.13	0.950	H	63.0	2.480	P	1.27	0.050
C	3.0 max	0.118 max	J	9.0	0.354	Q	1.27	0.050
D	82.36 min	3.243 min	K	5.81 max	0.229 max	R	83.82	3.300
E	12.51 min	0.493 min	L	12.06	0.475	S	2.54	0.100
F	2.0 max	0.079 max	M	3.81	0.150	T	1.1	0.043

49. OUTLINE DRAWINGS

PY1537

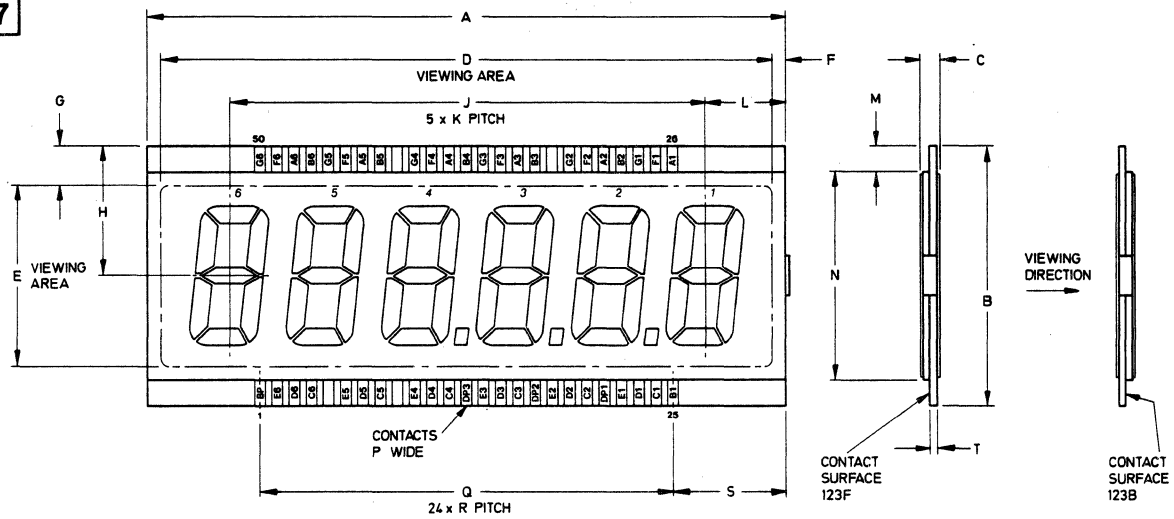

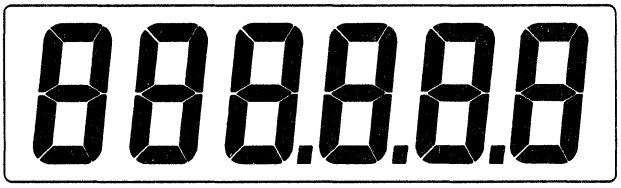

Ref	Millimetres	Inches
A	93.85	3.695
B	38.1	1.500
C	3.0 max	0.118 max
D	89.85 min	3.537 min
E	26.48 min	1.043 min
F	2.0 max	0.079 max

Ref	Millimetres	Inches
G	5.81 max	0.229 max
H	19.05	0.750
J	70.0	2.756
K	14.0	0.551
L	11.92	0.469
M	3.81	0.150

Ref	Millimetres	Inches
N	30.48	1.200
P	1.27	0.050
Q	60.96	2.400
R	2.54	0.100
S	16.45	0.648
T	1.1	0.043

PY1540

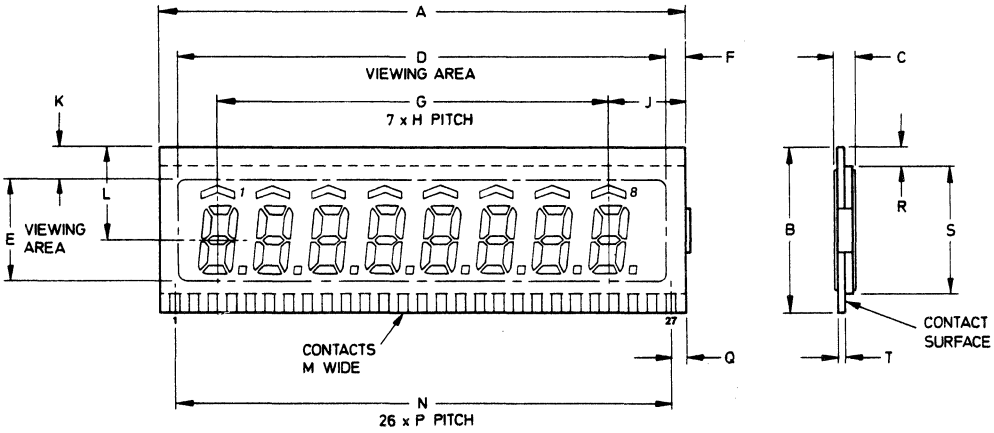

Ref	Millimetres	Inches
A	69.85	2.750
B	22.0	0.866
C	3.0 max	0.118 max
D	64.85 min	2.553 min
E	13.5 min	0.531 min
F	3.0 max	0.118 max

Ref	Millimetres	Inches
G	51.8	2.039
H	7.4	0.291
J	10.3	0.406
K	4.0 max	0.157 max
L	12.3	0.484
M	1.27	0.050

Ref	Millimetres	Inches
N	66.04	2.600
P	2.54	0.100
Q	1.9	0.075
R	2.5	0.098
S	17.0	0.669
T	1.1	0.043

49. OUTLINE DRAWINGS

PY1541

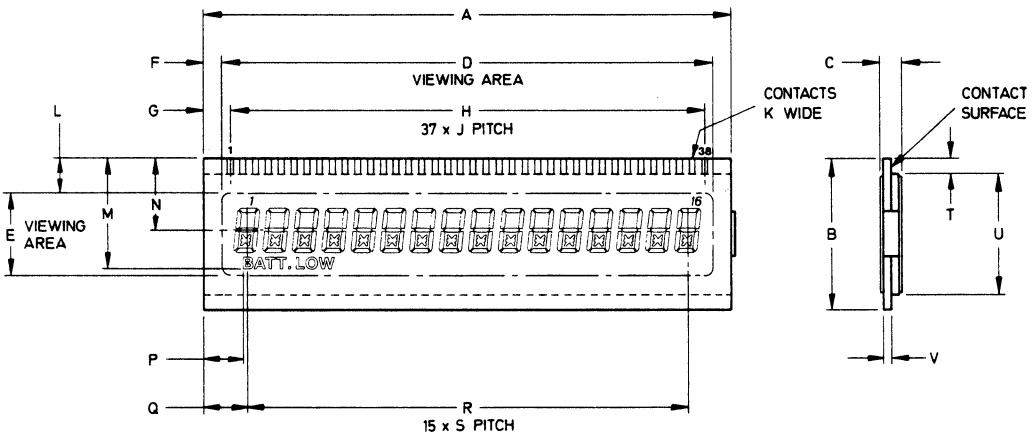

Ref	Millimetres	Inches
A	70.0	2.756
B	20.0	0.787
C	3.0 max	0.118 max
D	65.0 min	2.559 min
E	11.0 min	0.433 min
F	2.5 max	0.098 max
G	3.52	0.139

Ref	Millimetres	Inches
H	62.9	2.476
J	1.7	0.067
K	0.75	0.030
L	4.5 max	0.177 max
M	14.5	0.571
N	9.5	0.374
P	5.25	0.207

Ref	Millimetres	Inches
Q	5.75	0.226
R	58.5	2.303
S	3.9	0.154
T	2.0	0.079
U	16.0	0.630
V	1.1	0.043

PY1542

(All dimensions without limits are nominal)

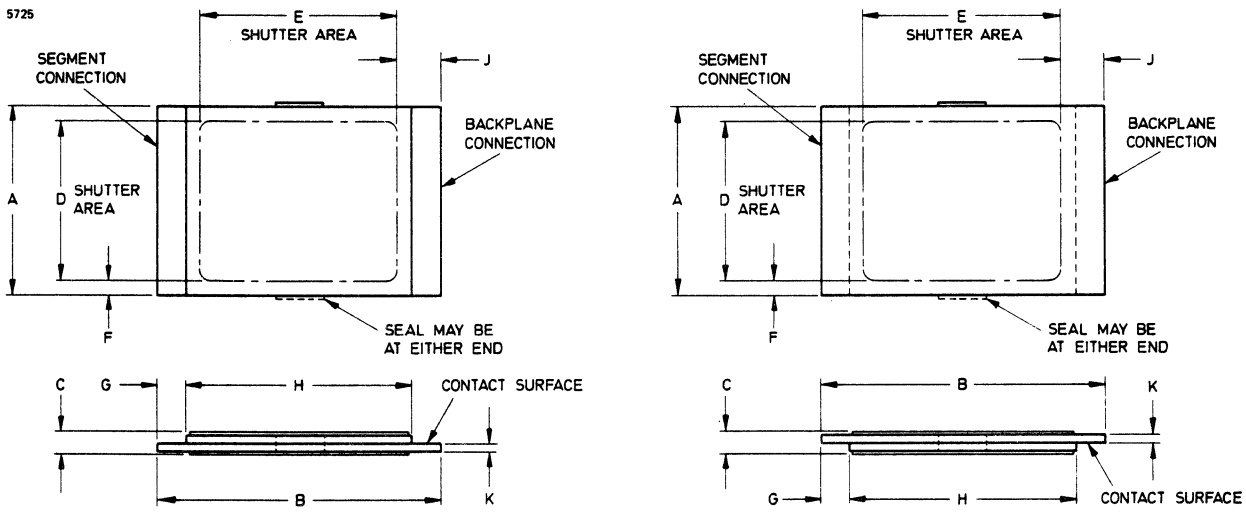

Ref	Millimetres	Inches
A	25.0	0.984
B	37.6	1.480
C	3.0 max	0.118 max
D	21.0 min	0.827 min

Ref	Millimetres	Inches
E	26.0 min	1.024 min
F	2.0 max	0.079 max
G	3.8	0.150
H	30.0	1.181

Ref	Millimetres	Inches
J	5.8 max	0.228 max
K	1.1	0.043

49. OUTLINE DRAWINGS

PY1543

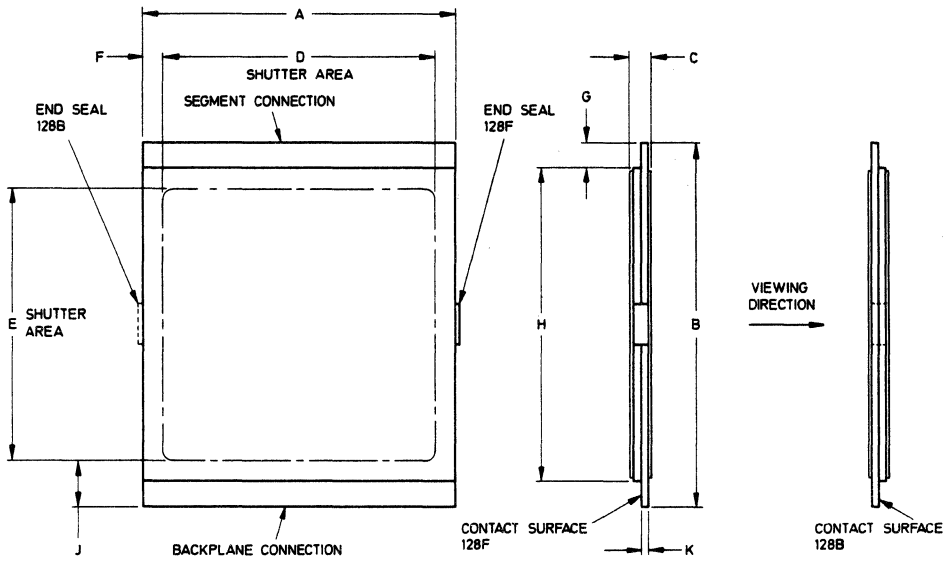

Ref	Millimetres	Inches
A	46.0	1.811
B	53.6	2.110
C	3.0 max	0.118 max
D	40.0 min	1.575 min

Ref	Millimetres	Inches
E	40.0 min	1.575 min
F	3.0 max	0.118 max
G	3.8	0.150
H	46.0	1.811

Ref	Millimetres	Inches
J	6.8 max	0.268 max
K	1.1	0.043

PY1544

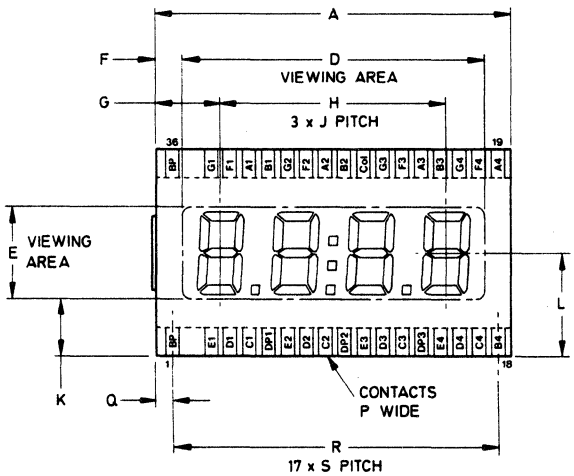

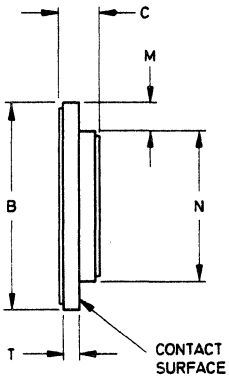

ACTUAL DISPLAY SIZE

Ref	Millimetres	Inches
A	23.60	0.929
B	13.72	0.540
C	3.0 max	0.118 max
D	19.6 min	0.772 min
E	6.12 min	0.241 min
F	2.0 max	0.079 max

Ref	Millimetres	Inches
G	4.3	0.169
H	15.0	0.591
J	5.0	0.197
K	3.8 max	0.150 max
L	6.86	0.270
M	1.9	0.075

Ref	Millimetres	Inches
N	9.92	0.391
P	0.90	0.035
Q	1.1	0.043
R	21.59	0.850
S	1.27	0.050
T	1.1	0.043

49. OUTLINE DRAWINGS

PY1545

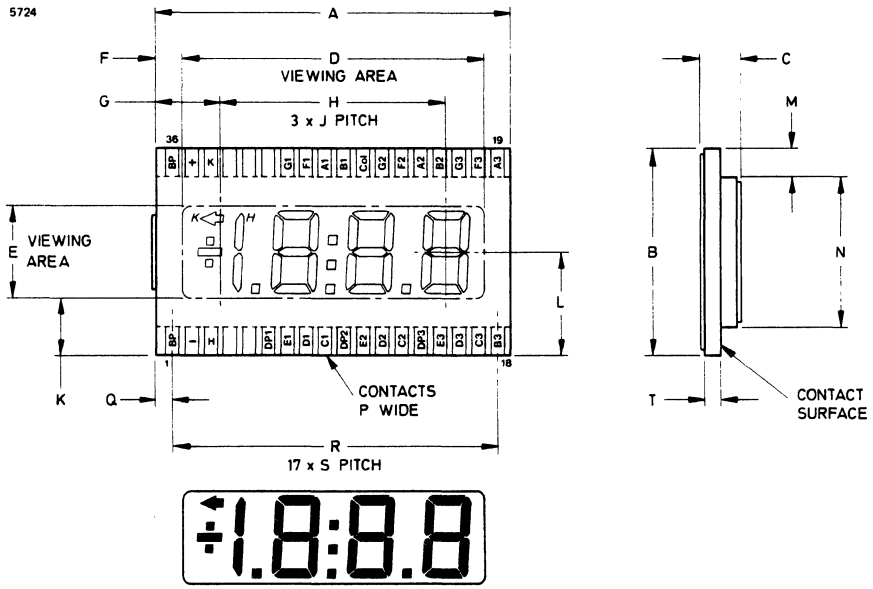

Ref	Millimetres	Inches	Ref	Millimetres	Inches	Ref	Millimetres	Inches
A	23.60	0.929	G	4.3	0.169	N	9.92	0.391
B	13.72	0.540	H	15.0	0.591	P	0.90	0.035
C	3.0 max	0.118 max	J	5.0	0.197	Q	1.1	0.043
D	19.6 min	0.772 min	K	3.8 max	0.150 max	R	21.59	0.850
E	6.12 min	0.241 min	L	6.86	0.270	S	1.27	0.050
F	2.0 max	0.079 max	M	1.9	0.075	T	1.1	0.043

PY1546

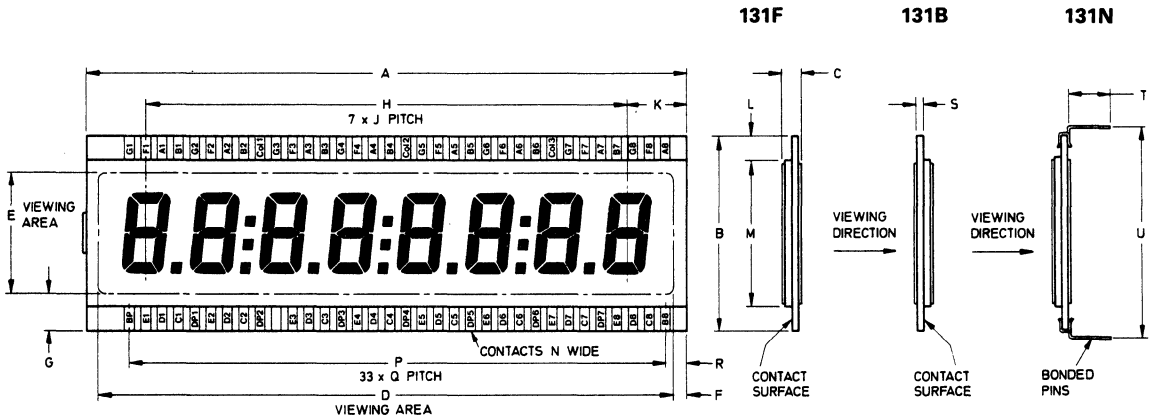

Ref	Millimetres	Inches	Ref	Millimetres	Inches	Ref	Millimetres	Inches
A	93.80	3.693	H	75.25	2.963	Q	2.54	0.100
B	30.48	1.200	J	10.75	0.423	R	3.1	0.122
C	3.0 max	0.118 max	K	9.28	0.365	S	1.1	0.043
D	89.8 min	3.535 min	L	3.81	0.150	T	6.35	0.250
E	18.86 min	0.743 min	M	22.86	0.900	U	33.02	1.300
F	2.0 max	0.079 max	N	1.27	0.050			
G	5.81 max	0.229 max	P	83.82	3.300			

49. OUTLINE DRAWINGS

PY1548 | PY1549

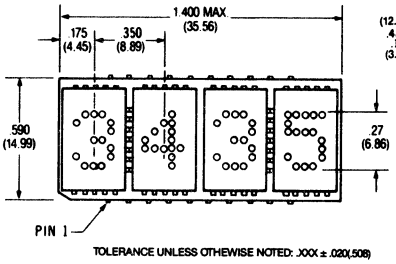

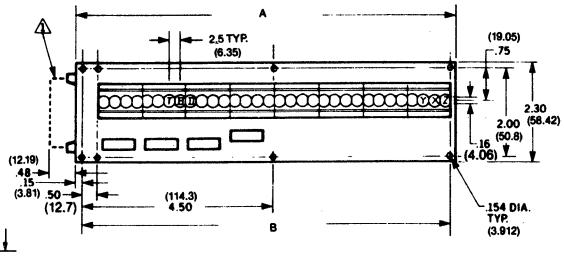

MODEL NO.	A	B
PY1549	4.80(121.92)	4.50(114.30)
PY1548a	8.80(223.52)	8.50(219.90)

* Dimensions in inches (mm)

PY1550

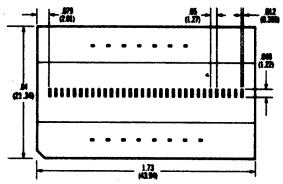

High resolution 50 mil. spacing. Additional features include built-in lamp test, 3 level dimming and blanking. Drive scheme: 5 bit binary code, 1 to 32.

PY1554

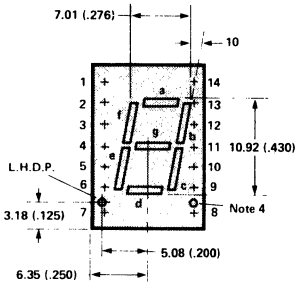

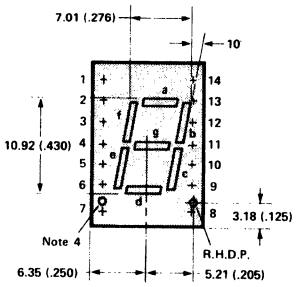

PY1554a
FRONT VIEW

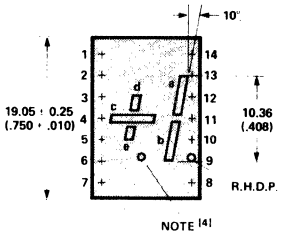

PY1554b

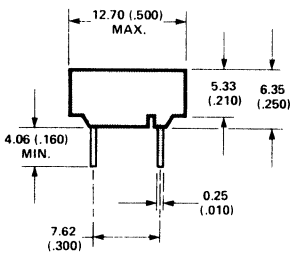

END VIEW

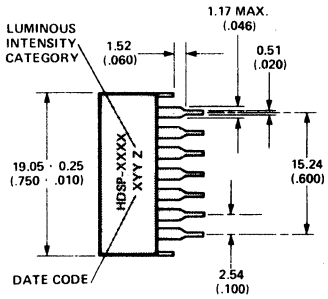

SIDE VIEW

NOTES:
1. Dimensions in millimeters and (inches).
2. All untoleranced dimensions are for reference only.
3. Redundant anodes.
4. Unused dp position.
5. See Internal Circuit Diagram.
6. Redundant cathode.
7. See part number table for L.H.D.P. and R.H.D.P. designation.

PY1557

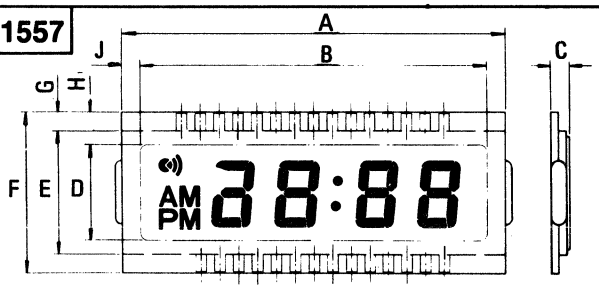

Suffix	A	B	C	D	E	F	G	H	J	UNITS
PY1557	52 TYP	47 TYP	2.5 TYP	13 TYP	17 TYP	22 TYP	2.5 TYP	4.5 TYP	2.5 TYP	MM
PY1557a	70 TYP	65 TYP	2.5 TYP	20 TYP	24 TYP	30 TYP	3.0 TYP	5.0 TYP	2.5 TYP	MM

PY1558

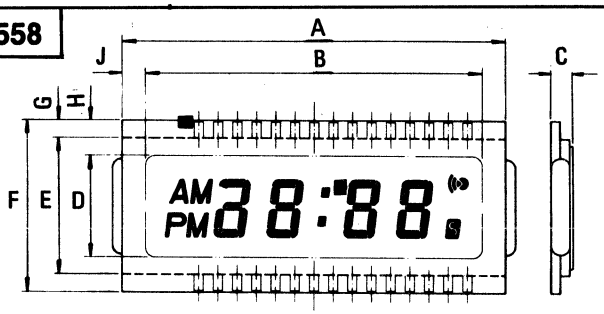

Suffix	A	B	C	D	E	F	G	H	J	UNITS
PY1558	40 TYP	35 TYP	2.5 TYP	10.5 TYP	14.5 TYP	18 TYP	1.75 TYP	3.75 TYP	2.5 TYP	MM

49. OUTLINE DRAWINGS

PY1552

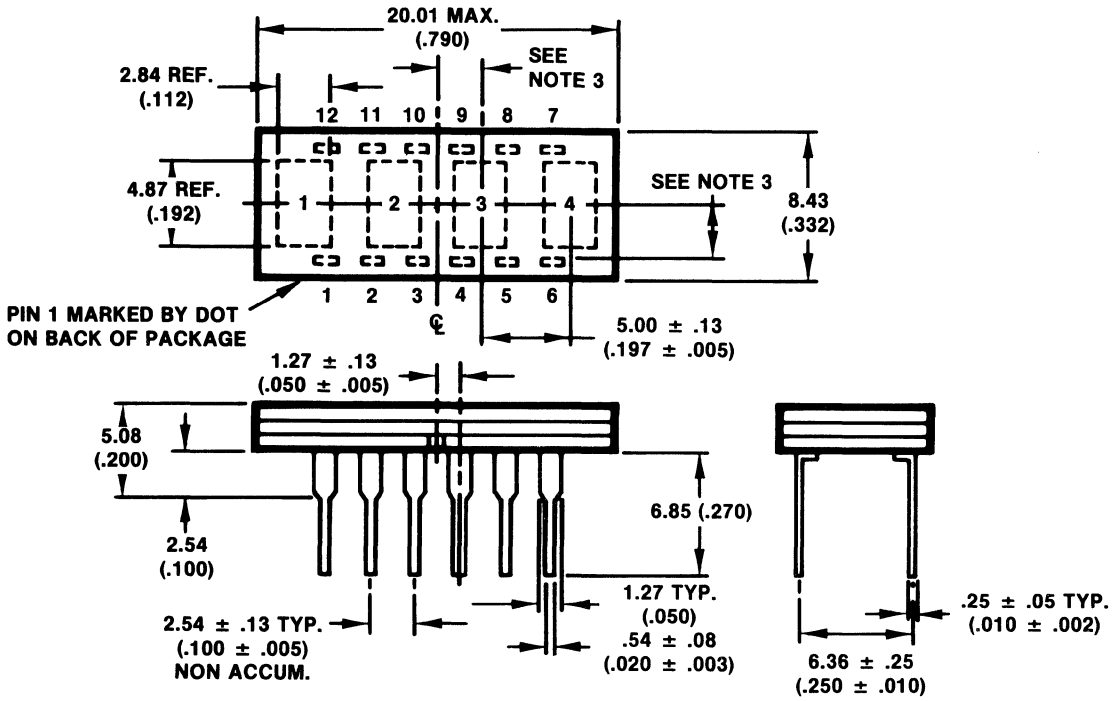

PY1553

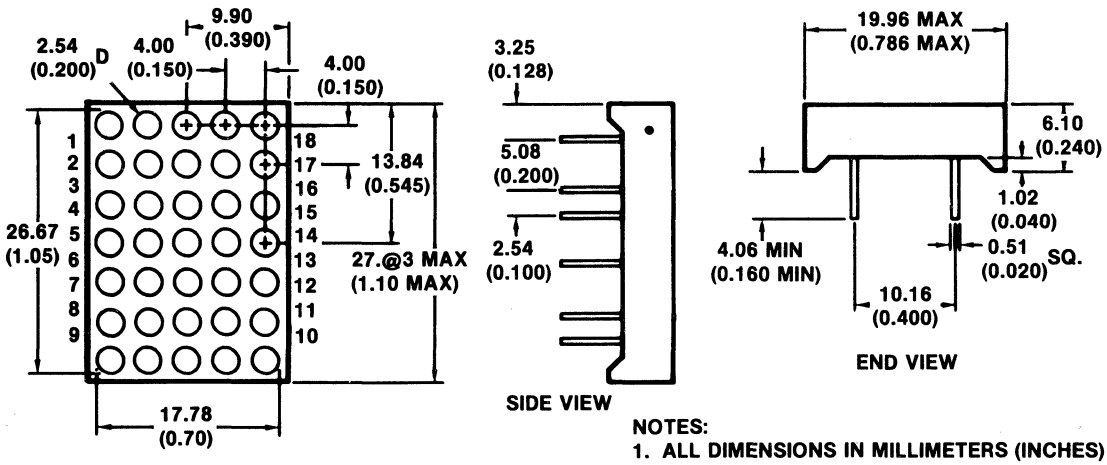

NOTES:
1. ALL DIMENSIONS IN MILLIMETERS (INCHES)
2. ALL UNTOLERANCED DIMENSIONS ARE FOR REFERENCE ONLY.
3. A BLACK DOT ON SCRAMBLER SIDE DENOTES PIN NO. 1.

49. OUTLINE DRAWINGS

PY1567

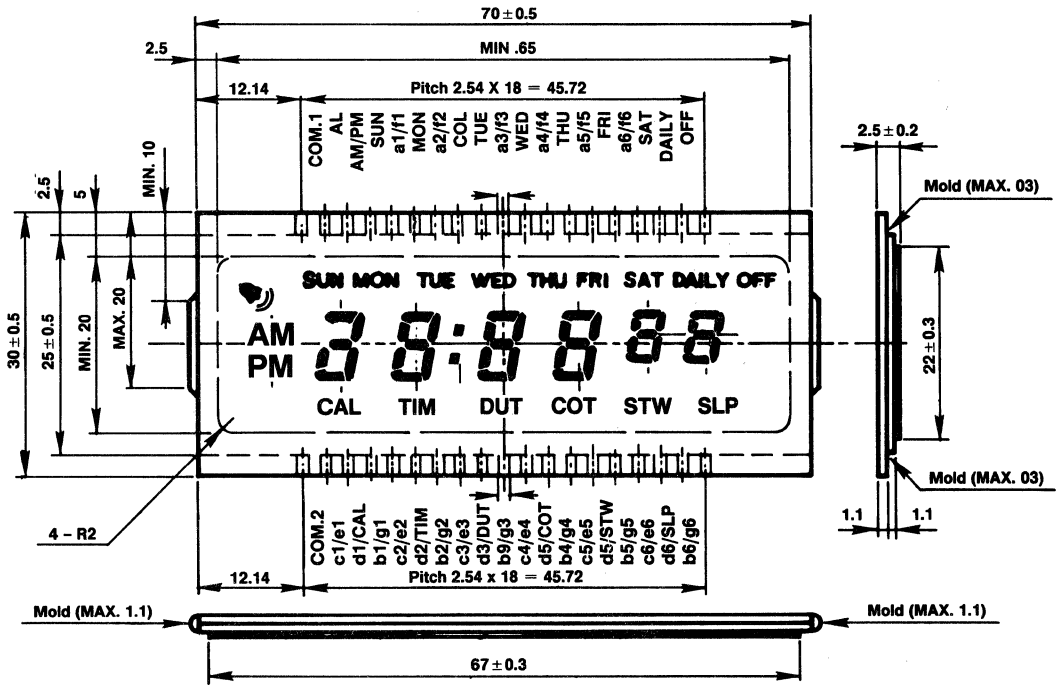

PY1568

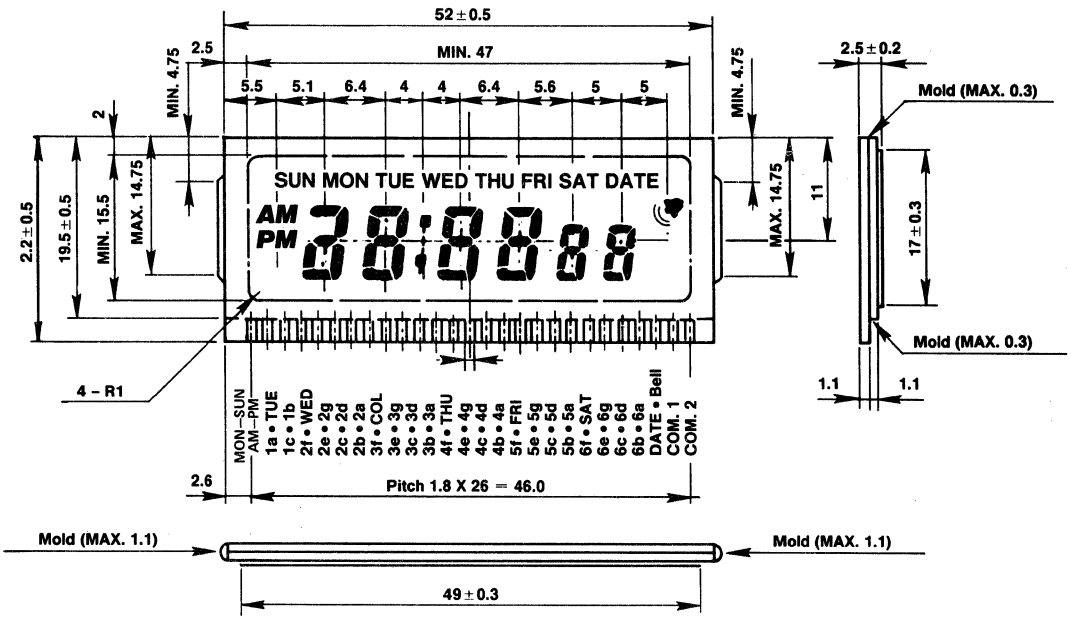

49. OUTLINE DRAWINGS

PY1555

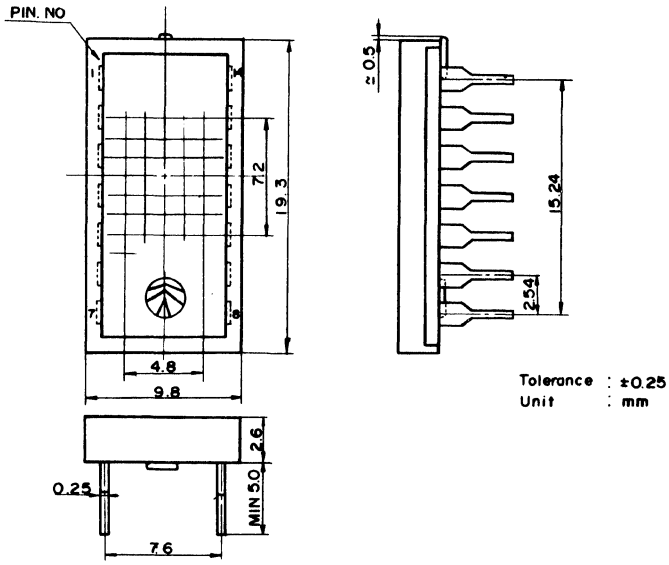

PIN NO	ADDRESS	PIN. NO	ADDRESS
1	Column 2	8	Column
2	Row 1	9	Row 7
3	" 3	10	" 6
4	" 4	11	" 5
5	Column 1	12	" 2
6	N.C	13	Column 5
7	D. P	14	" 4

PY1556

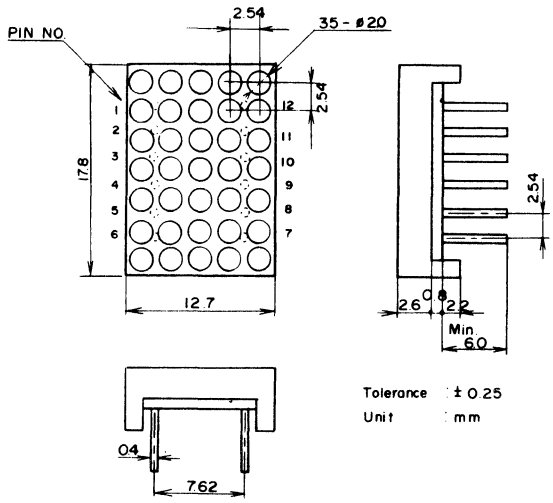

PIN NO	ADDRESS	PIN NO.	ADDRESS
1	Column 1	7	Column 4
2	Row 3	8	" 5
3	Column 2	9	Row 4
4	Row 5	10	Column 3
5	" 6	11	Row 2
6	" 7	12	" 1

PY1559

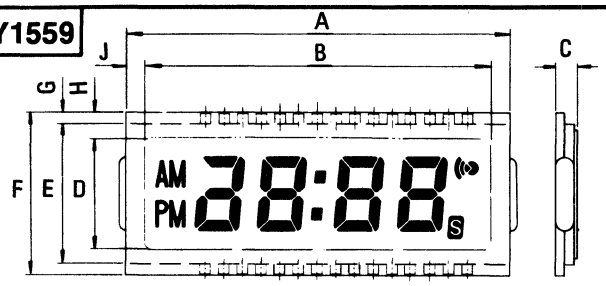

Suffix	A	B	C	D	E	F	G	H	J	UNITS
PY1559	52 TYP	47 TYP	2.5 TYP	15 TYP	19 TYP	22 TYP	1.5 TYP	3.5 TYP	2.5 TYP	MM

PY1560

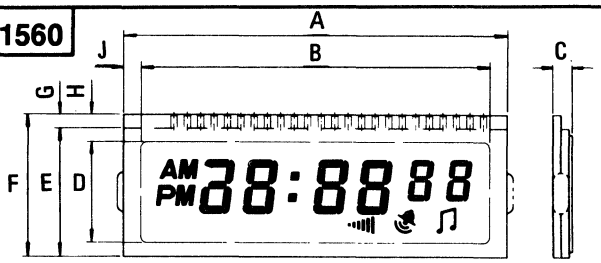

Suffix	A	B	C	D	E	F	G	H	J	UNITS
PY1560	57 TYP	52 TYP	2.5 TYP	15 TYP	19 TYP	21 TYP	2.0 TYP	4.0 TYP	2.5 TYP	MM

PY1561

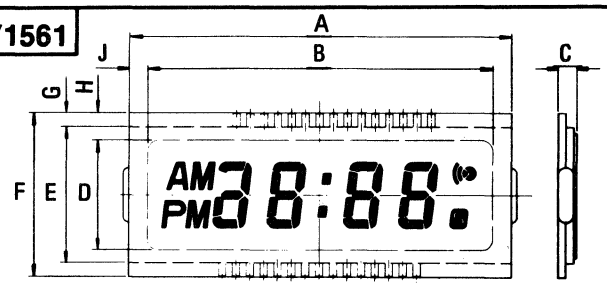

Suffix	A	B	C	D	E	F	G	H	J	UNITS
PY1561	70 TYP	63 TYP	2.5 TYP	20 TYP	25 TYP	30 TYP	2.5 TYP	5.0 TYP	3.5 TYP	MM

PY1562

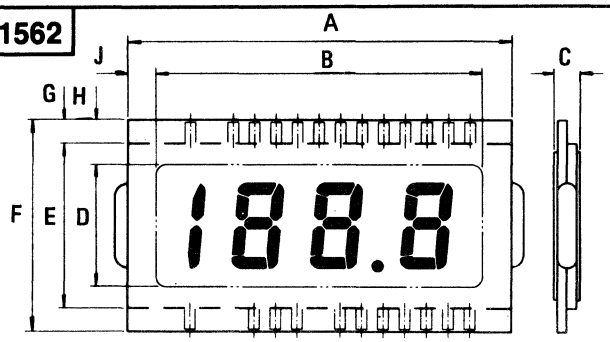

Suffix	A	B	C	D	E	F	G	H	J	UNITS
PY1562	26.7 TYP	22.8 TYP	1.8 TYP	8.6 TYP	11.6 TYP	14.7 TYP	1.55 TYP	3.05 TYP	1.95 TYP	MM
PY1562a	35 TYP	30 TYP	2.5 TYP	11.2 TYP	15.2 TYP	17.3 TYP	2.1 TYP	4.1 TYP	2.5 TYP	MM
PY1562b	46 TYP	41 TYP	2.5 TYP	14.5 TYP	18.5 TYP	20.5 TYP	2.0 TYP	4.0 TYP	2.5 TYP	MM

49. OUTLINE DRAWINGS

PY1566

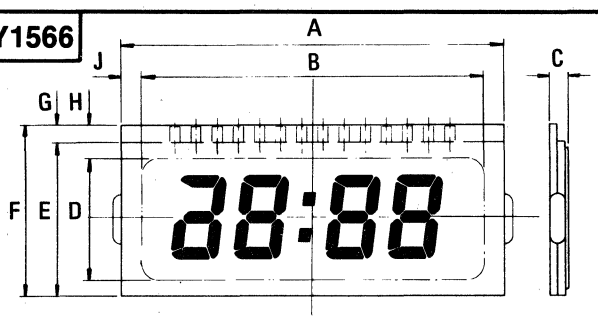

Suffix	A	B	C	D	E	F	G	H	J	UNITS
PY1566	35 TYP	30 TYP	2.5 TYP	11.2 TYP	15.2 TYP	17.3 TYP	2.1 TYP	4.1 TYP	2.5 TYP	MM
PY1566a	46 TYP	41 TYP	2.5 TYP	14.5 TYP	18.5 TYP	20.5 TYP	2.0 TYP	4.0 TYP	2.5 TYP	MM

PY1564

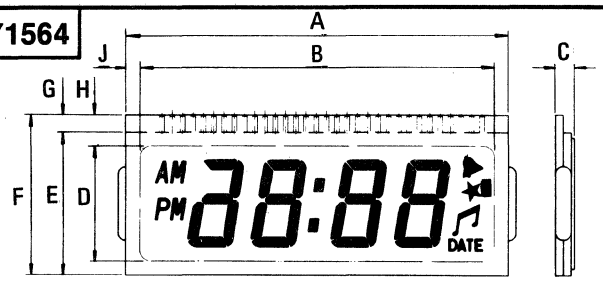

Suffix	A	B	C	D	E	F	G	H	J	UNITS
PY1564	52 TYP	48 TYP	2.5 TYP	15.5 TYP	19.5 TYP	21.7 TYP	2.2 TYP	4.2 TYP	2.0 TYP	MM

PY1565

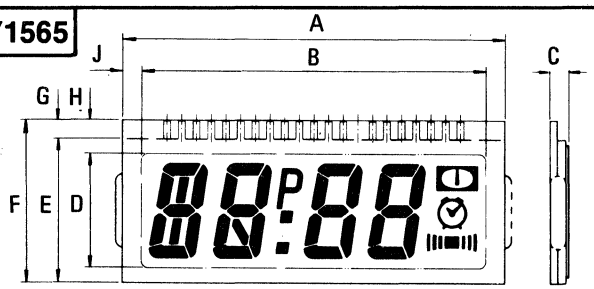

Suffix	A	B	C	D	E	F	G	H	J	UNITS
PY1565	52 TYP	47 TYP	2.5 TYP	15.5 TYP	19.5 TYP	22 TYP	2.5 TYP	4.5 TYP	2.5 TYP	MM
PY1565a	61 TYP	56 TYP	2.5 TYP	20.5 TYP	25 TYP	27.5 TYP	2.5 TYP	4.75 TYP	2.5 TYP	MM

PY1571

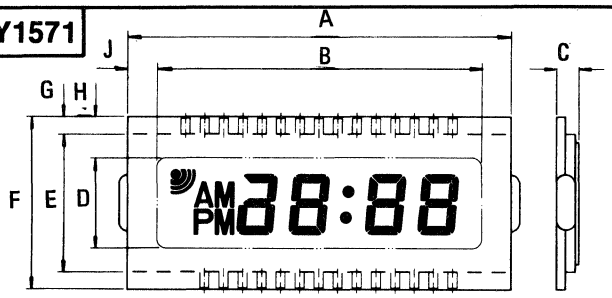

Suffix	A	B	C	D	E	F	G	H	J	UNITS
PY1571	40 TYP	34 TYP	2.5 TYP	9.5 TYP	14.5 TYP	18 TYP	1.75 TYP	4.25 TYP	3.0 TYP	MM
PY1571a	52 TYP	47 TYP	2.5 TYP	13 TYP	17 TYP	22 TYP	2.5 TYP	4.5 TYP	2.5 TYP	MM
PY1571b	52 TYP	47 TYP	2.5 TYP	17 TYP	21.25 TYP	27.5 TYP	3.125 TYP	5.25 TYP	2.5 TYP	MM

PY1570

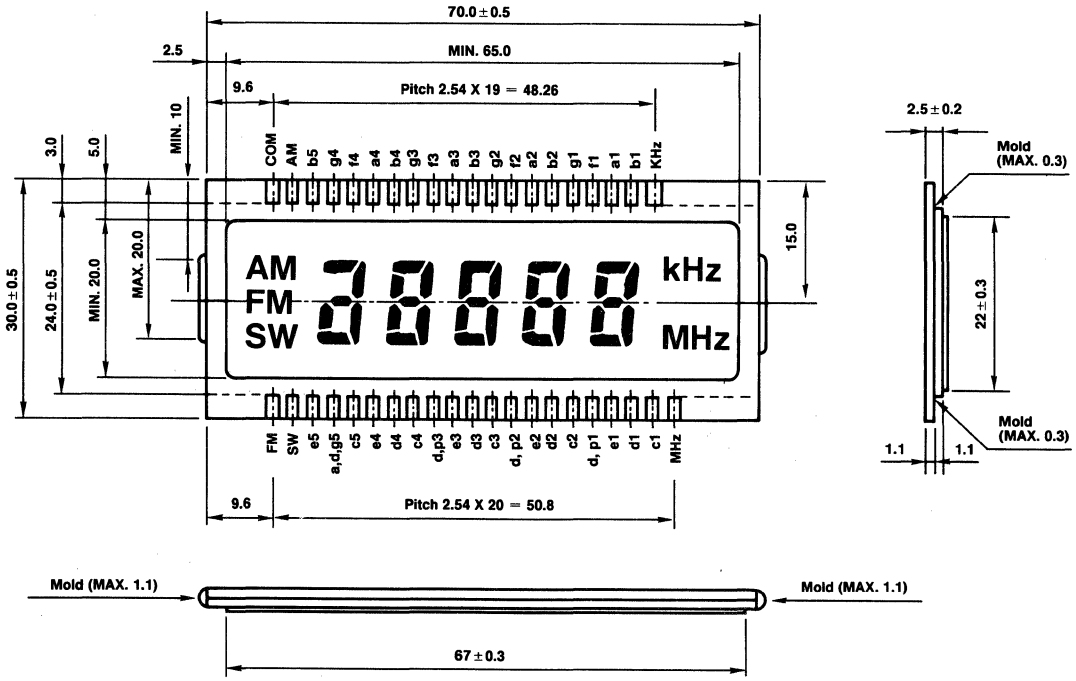

49. OUTLINE DRAWINGS

PY1569

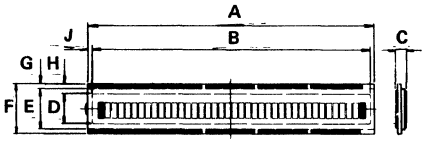

Suffix	A	B	C	D	E	F	G	H	J	UNITS	CHARS X LINES
PY1569	160 TYP	155.4 TYP	2.6 TYP	16.5 TYP	22.5 TYP	27.5 TYP	2.5 TYP	5.5 TYP	2.5 TYP	MM	40X1

PY1572

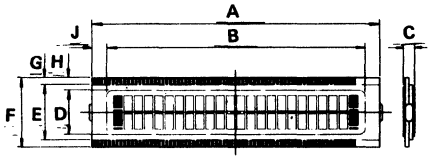

Suffix	A	B	C	D	E	F	G	H	J	UNITS	CHARS X LINES
PY1572	105 TYP	155.4 TYP	2.6 TYP	16 TYP	20 TYP	25 TYP	2.5 TYP	4.5 TYP	5.25 TYP	MM	24X2
PY1572a	70 TYP	64.5 TYP	2.6 TYP	16 TYP	20 TYP	25 TYP	2.5 TYP	4.5 TYP	2.75 TYP	MM	16X2
PY1572b	160 TYP	155.4 TYP	2.6 TYP	16.5 TYP	22.5 TYP	27.5 TYP	2.5 TYP	5.5 TYP	2.5 TYP	MM	40X2

PY1573

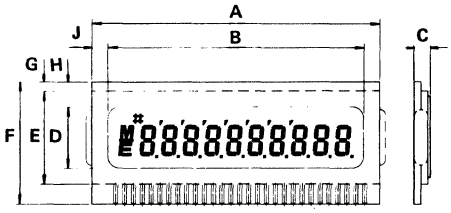

Suffix	A	B	C	D	E	F	G	H	J	UNITS
PY1573	52 TYP	46 TYP	2.5 TYP	11 TYP	17 TYP	22 TYP	1.5 TYP	4.5 TYP	3.0 TYP	MM

PY1574

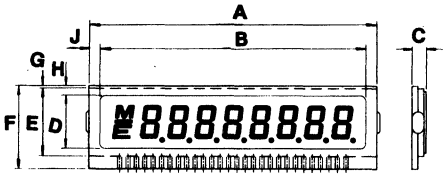

Suffix	A	B	C	D	E	F	G	H	J	UNITS
PY1574	103 TYP	95 TYP	2.5 TYP	19 TYP	24.6 TYP	30 TYP	0.9 TYP	3.7 TYP	4.0 TYP	MM
PY1574a	45 TYP	40 TYP	2.5 TYP	10 TYP	14.8 TYP	17.3 TYP	TYP	2.4 TYP	2.5 TYP	MM
PY1574b	40 TYP	33.4 TYP	2.5 TYP	9.0 TYP	14.5 TYP	18 TYP	1.75 TYP	4.5 TYP	3.3 TYP	MM
PY1574c	52 TYP	43 TYP	2.5 TYP	10 TYP	14.8 TYP	17.3 TYP	TYP	2.4 TYP	4.5 TYP	MM
PY1574d	40 TYP	35 TYP	2.5 TYP	7.65 TYP	11.55 TYP	14.4 TYP	TYP	1.95 TYP	2.5 TYP	MM

PY1563

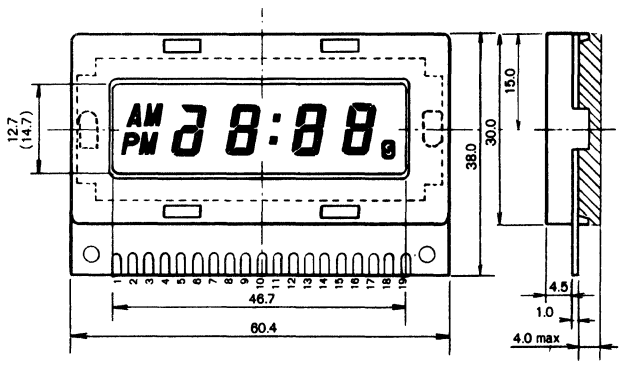

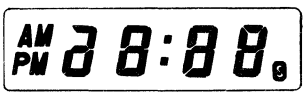

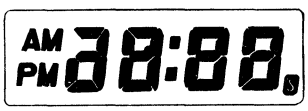

PIN No.	Symbol	PIN No.	Symbol
1	SLP	11	SNZ
2	LMP	12	SEC
3	VSS	13	ALS
4	VDD	14	STW
5	60/120	15	DUT
6	60/30	16	FH
7	CNT	17	FM
8	ALM	18	FS
9	SCI	19	TST
10	ACS	—	

PY1576

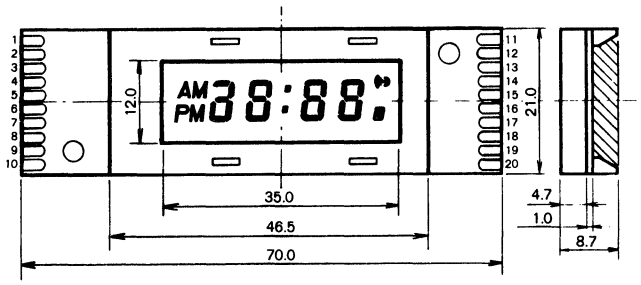

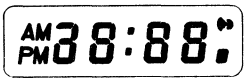

PIN No.	Symbol	PIN No.	Symbol
1	TST	11	FS
2	CNT	12	FM
3	SLP	13	FH
4	ALM	14	DUT
5	LMP	15	STW
6	LMP	16	ALS
7	VDD	17	SEC
8	VSS	18	SNZ
9	60/120	19	ACS
10	60/30	20	SCI

49. OUTLINE DRAWINGS

PY1575

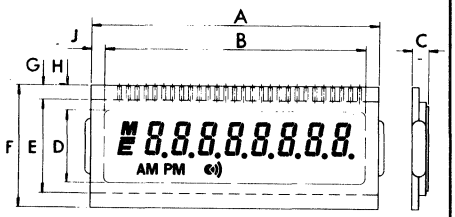

Suffix	A	B	C	D	E	F	G	H	J	UNITS
PY1575	52 TYP	47 TYP	2.5 TYP	13 TYP	17 TYP	22 TYP	2.5 TYP	4.5 TYP	2.5 TYP	MM

PY1577

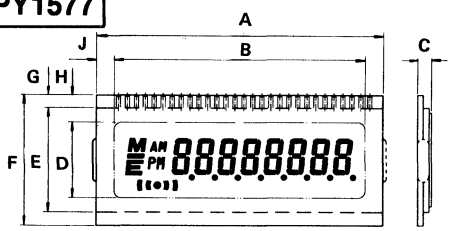

Suffix	A	B	C	D	E	F	G	H	J	UNITS
PY1577	40 TYP	35 TYP	1.7 TYP	10.5 TYP	14.5 TYP	18 TYP	1.75 TYP	3.75 TYP	2.5 TYP	MM

PY1578

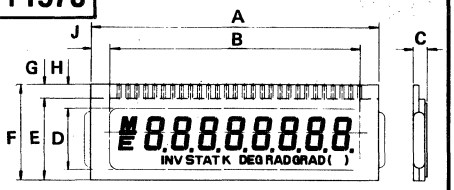

Suffix	A	B	C	D	E	F	G	H	J	UNITS
PY1578	52 TYP	45 TYP	2.5 TYP	11 TYP	14.8 TYP	17.3 TYP	2.5 TYP	4.4 TYP	3.5 TYP	MM
PY1578a	52 TYP	47 TYP	2.5 TYP	13 TYP	17 TYP	22 TYP	2.5 TYP	4.5 TYP	2.5 TYP	MM

PY1579

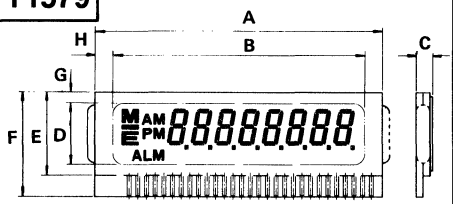

Suffix	A	B	C	D	E	F	G	H	UNITS
PY1579	40 TYP	35 TYP	2.5 TYP	8.5 TYP	11.5 TYP	14.4 TYP	1.525 TYP	2.5 TYP	MM

PY1580

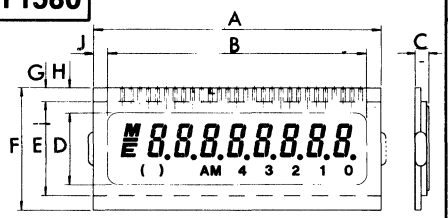

Suffix	A	B	C	D	E	F	G	H	J	UNITS
PY1580	52 TYP	47 TYP	2.5 TYP	13 TYP	17 TYP	22 TYP	2.5 TYP	4.5 TYP	2.5 TYP	MM

PY1581

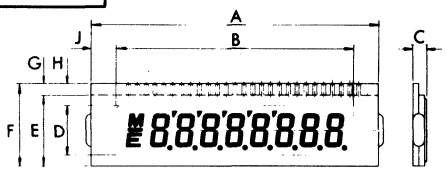

Suffix	A	B	C	D	E	F	G	H	J	UNITS
PY1581	52 TYP	43 TYP	2.5 TYP	9.0 TYP	13 TYP	15 TYP	2.0 TYP	4.0 TYP	4.5 TYP	MM

PY1582

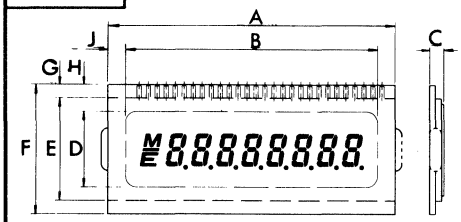

Suffix	A	B	C	D	E	F	G	H	J	UNITS
PY1582	40 TYP	35 TYP	1.7 TYP	10.5 TYP	14.5 TYP	18 TYP	1.75 TYP	3.75 TYP	2.5 TYP	MM

PY1583

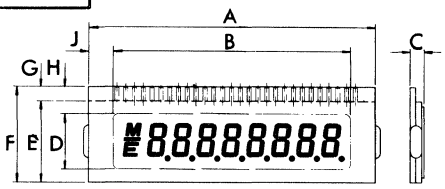

Suffix	A	B	C	D	E	F	G	H	J	UNITS
PY1583	52 TYP	43 TYP	2.5 TYP	10 TYP	14.8 TYP	17.3 TYP	2.5 TYP	4.4 TYP	4.5 TYP	MM
PY1583a	52 TYP	43 TYP	2.5 TYP	9.0 TYP	13 TYP	15 TYP	2.0 TYP	4.0 TYP	4.5 TYP	MM
PY1583b	52 TYP	43 TYP	2.5 TYP	8.5 TYP	12.5 TYP	15 TYP	2.5 TYP	4.5 TYP	4.3 TYP	MM

PY1589

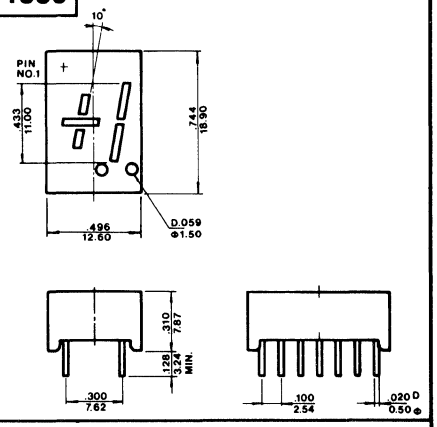

PY1590

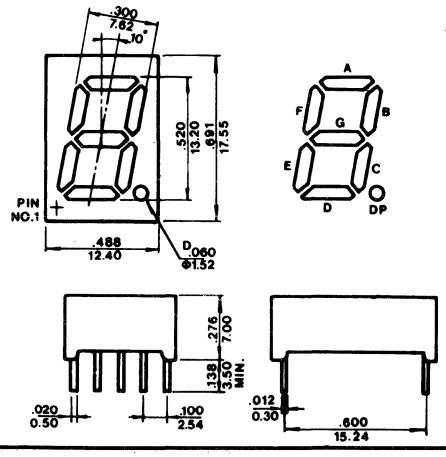

PY1591

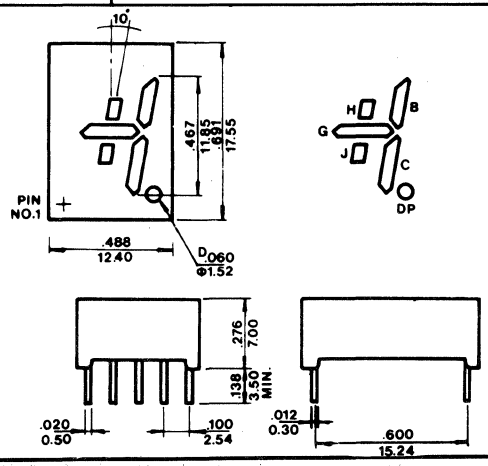

49. OUTLINE DRAWINGS

PY1584

PY1584a

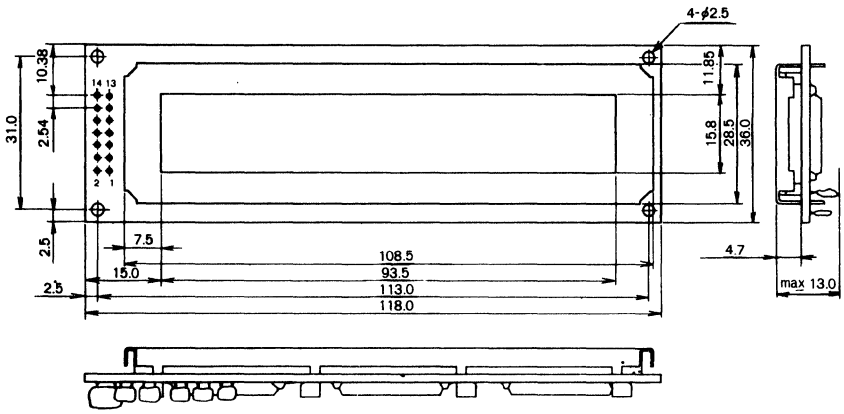

PY1584b

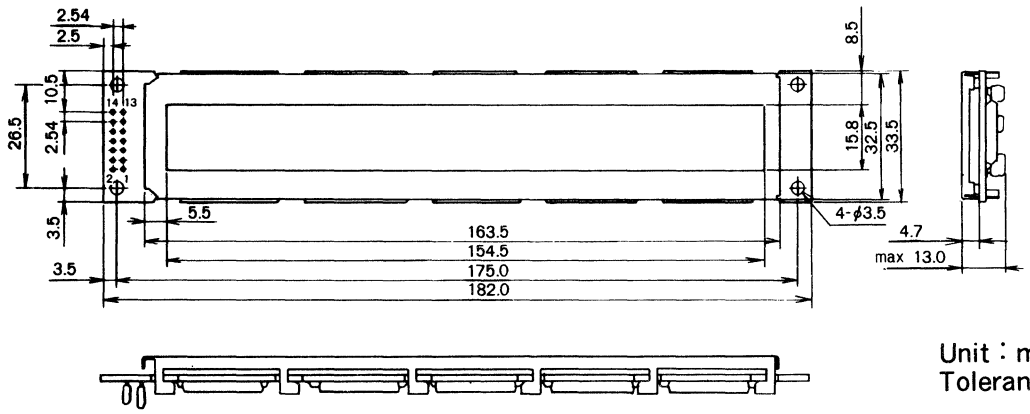

Unit : mm
Tolerance : ±0.5

PY1584c

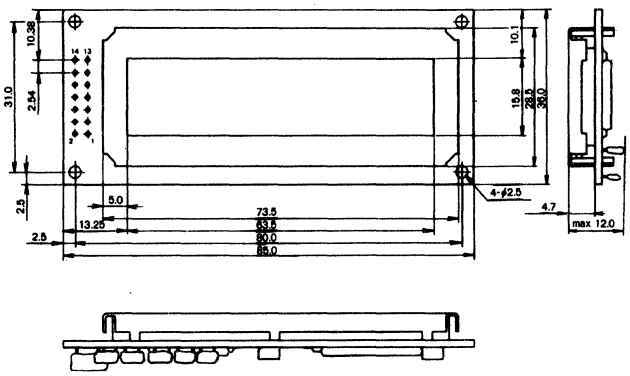

Pin No.	Symbol	Function
1	V_{SS}	0V(GND)
2	V_{DD}	+5V
3	V_{EE}	Power supply for LC driving
4	RS	Signal to select registers
5	R/W	Signal to select read or write
6	E	Enable signal
7	DB0	Data bus line
8	DB1	
9	DB2	
10	DB3	
11	DB4	
12	DB5	
13	DB6	
14	DB7	

49. OUTLINE DRAWINGS

PY1585

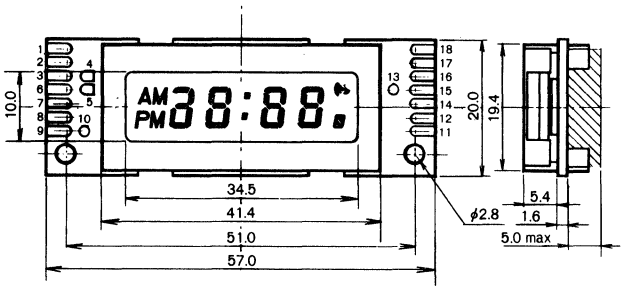

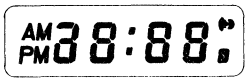

PIN No.	Symbol	PIN No.	Symbol
1	REAL SW	11	VSS 1
2	ALM SW	12	VDD
3	SLP SW	13	12/24
4	DUAL SW	14	BUZ-OUT
5	SEC SW	15	CNT-OUT
6	FH SW	16	BUZ
7	FM SW	17	SNOOZE
8	FS SW	18	RESET
9	LAMP 1		
10	LAMP 2		

PY1586

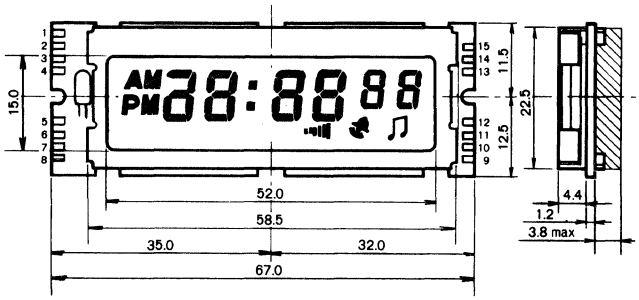

PIN No.	Symbol	PIN No.	Symbol
1	BUZ-OUT	11	CNT-ON
2	CNT-OUT	12	SNZ
3	MODE-SEL	13	BUZ-ON
4	SET	14	VSS
5	LAMP	15	VDD
6	HOUR		
7	MINUTE		
8	SECOND		
9	SLP		
10	BUZ-OFF		

PY1587

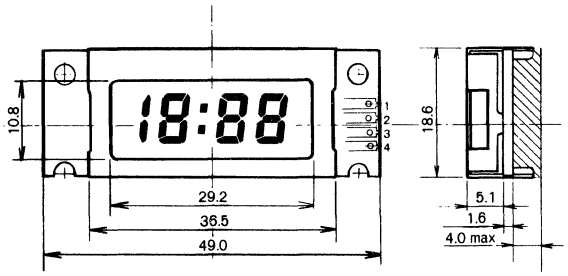

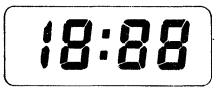

PIN No.	Symbol
1	S 1 SW
2	VDD
3	S 2 SW
4	Vss 1

PY1588

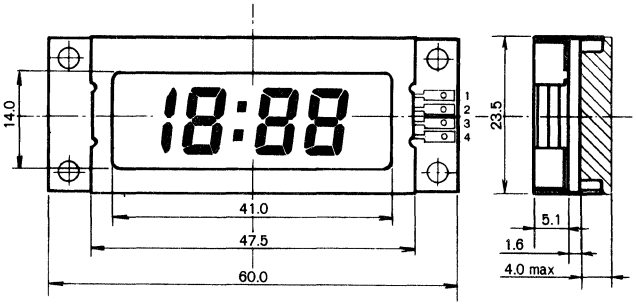

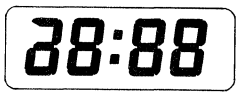

PIN No.	Symbol
1	S 1 SW
2	VDD
3	S 2 SW
4	Vss 1

49. OUTLINE DRAWINGS

PY1592

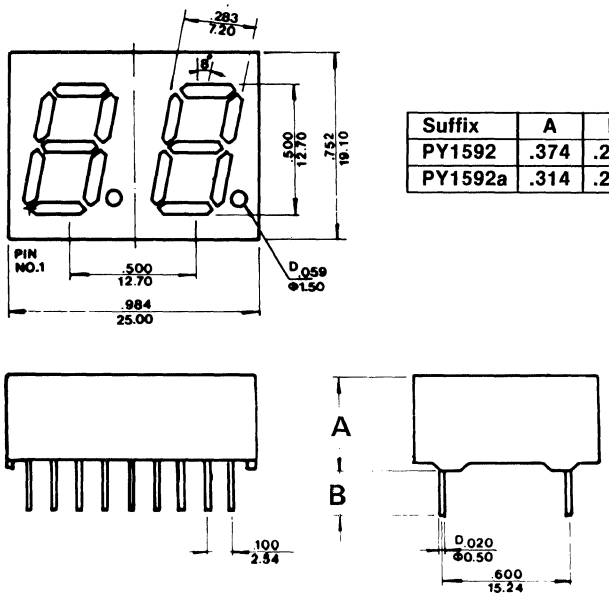

Suffix	A	B
PY1592	.374	.248
PY1592a	.314	.291

PY1593

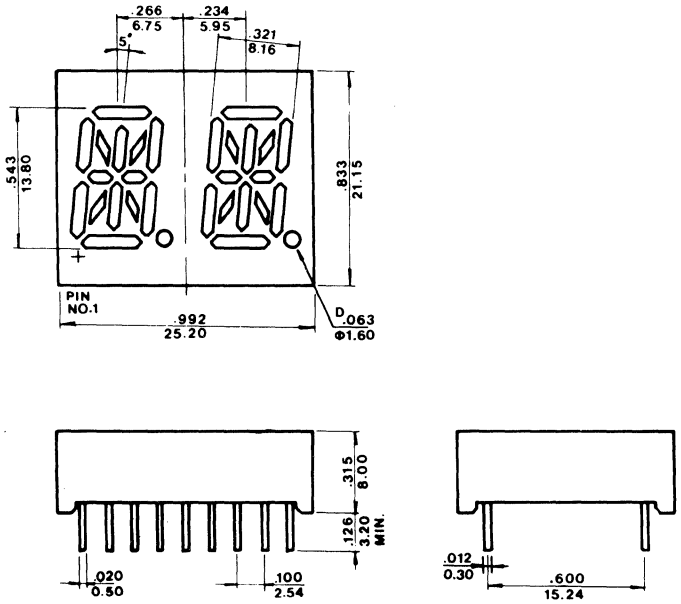

PY1594

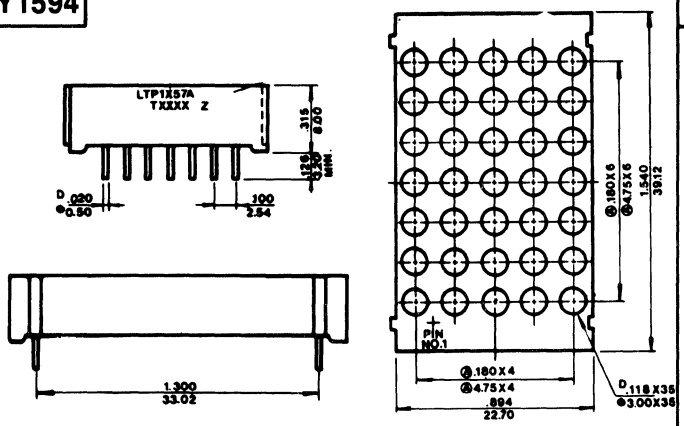

PY1603

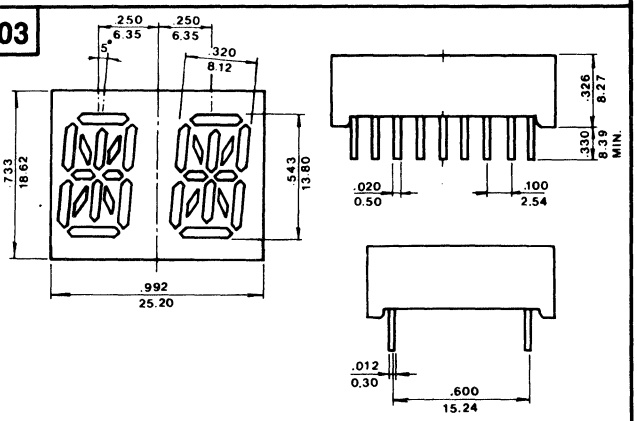

PY1595

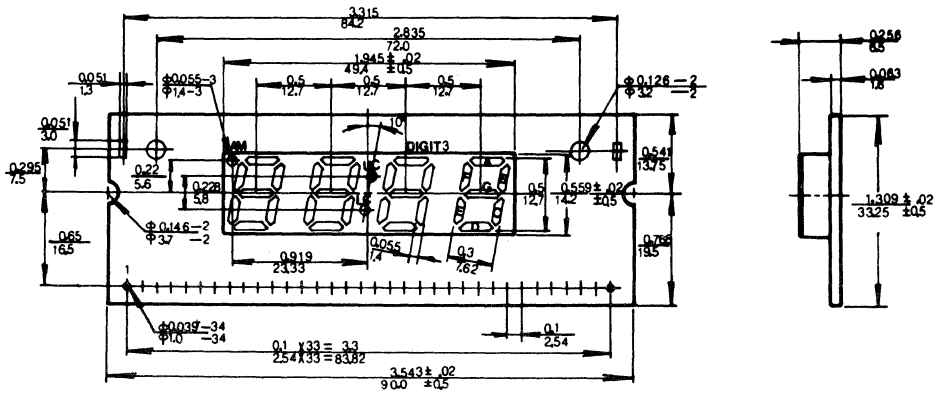

49. OUTLINE DRAWINGS

PY1596

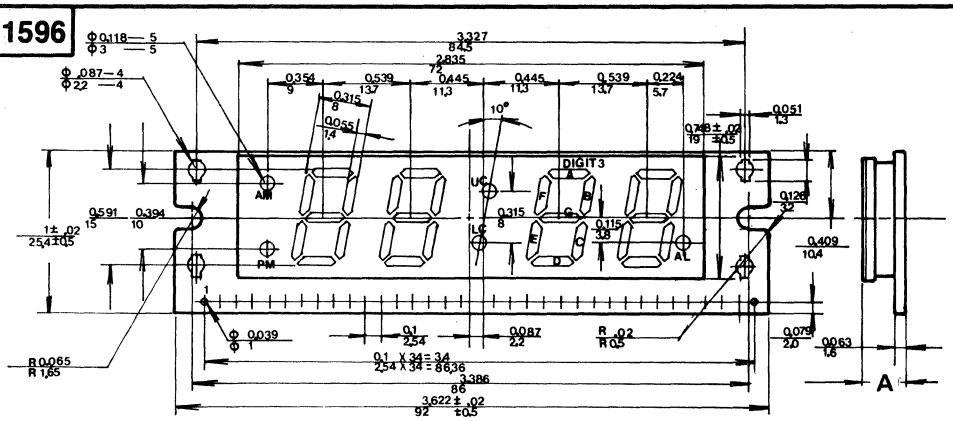

Suffix	A
PY1596	5.8
PY1596a	6.9

PY1597

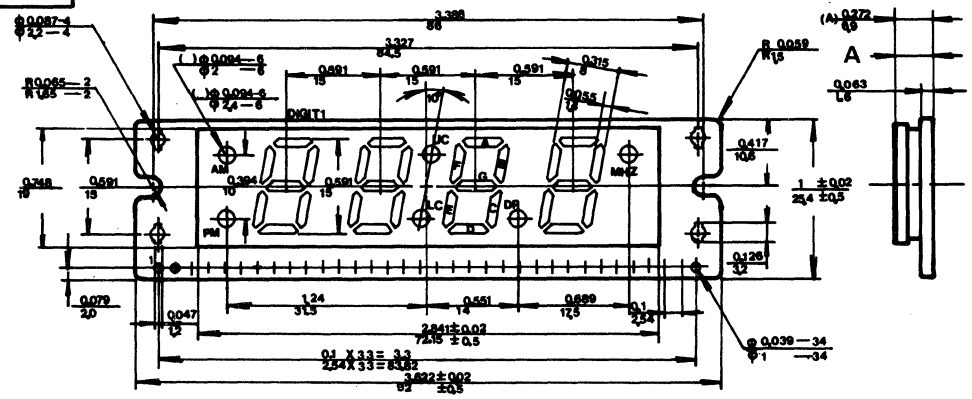

Suffix	A
PY1597	6.9
PY1597a	5.9

PY1598

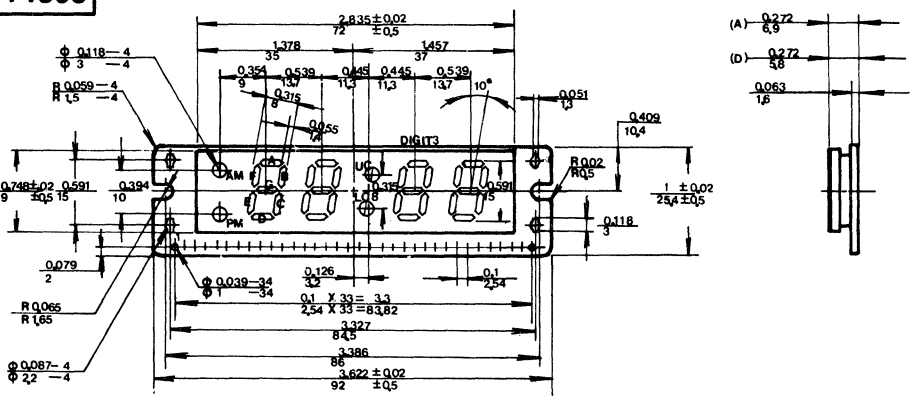

Suffix	A
PY1598	6.9
PY1598a	5.8

PY1600

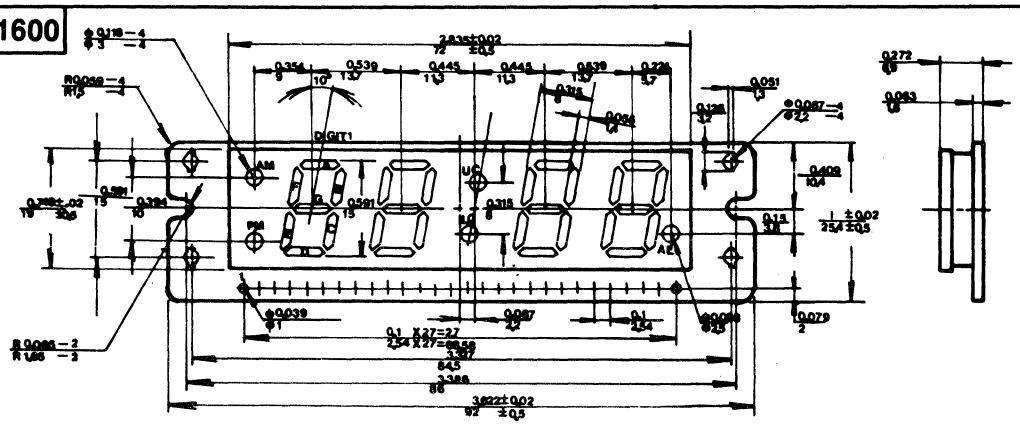

Suffix	A	B
PY1600	6.9	68.5
PY1600a	5.8	73.6

49. OUTLINE DRAWINGS

PY1606

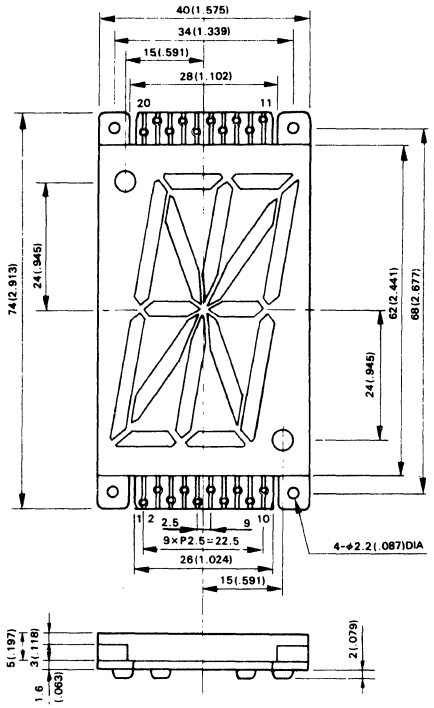

PY1607

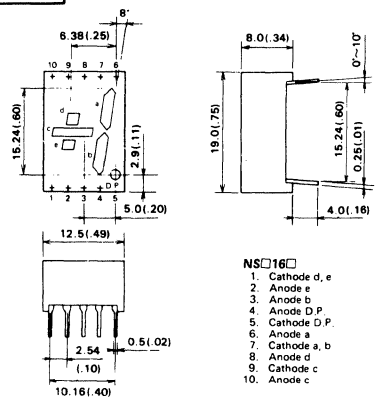

PY1608a-d

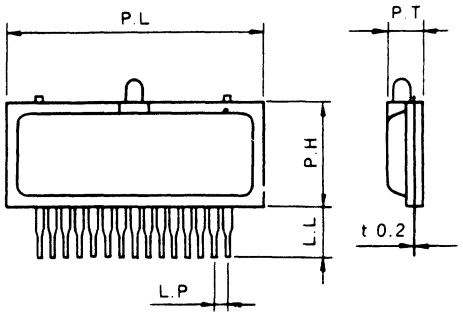

(mm)

	P.H	P.L	P.T	L.P	L.L
a	20±1.0	81.0±1.0	8.0 MAX.	2.54	11.0
b	24.5±1.0	113.0±1.5	8.5 MAX.	2.54	24.0
c	31.0±1.0	138.0±1.0	7.8±1.0	2.54	11.0
d	20.0±1.0	92.0±1.0	$6.5^{+0.5}_{-1.0}$	2.54	16.0

PY1609a-f

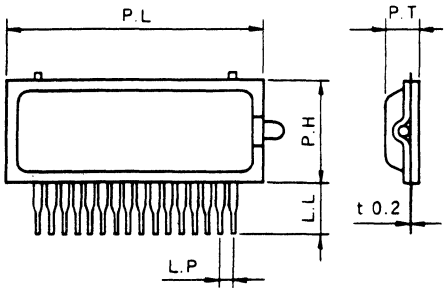

	P.H (mm)	P.L (mm)	P.T (mm)	L.P (mm)	L.L (mm)
a	33.0±1.0	205.0±1.0	9.6 MAX.	2.54	14.0
b	17.0±1.0	62.5±1.0	6.5 MAX.	2.54	8.0
c	22.8±1.0	75.2±1.0	7.7±1.0	2.54	10.5
d	24.5±1.0	55.4±1.0	$6.5^{+0.5}_{-1.0}$	2.54	12.5
e	33.0±1.0	55.0±1.0	$8.0^{+1.5}_{-0.5}$	2.54	10.0
f	20.0±1.0	$90.5^{+1.5}_{-1.0}$	$7.0^{+0.5}_{-0.7}$	2.54	10.0

PY1610

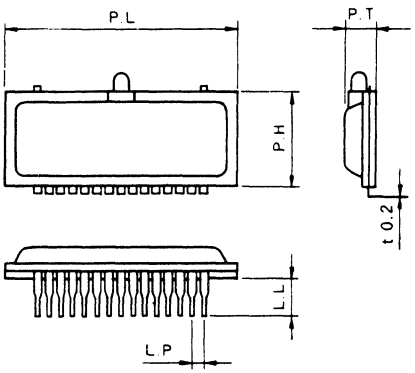

P.H (mm)	P.L (mm)	P.T (mm)	L.P (mm)	L.L (mm)
20.0±1.0	81.0±1.0	8.0 MAX.	2.54	9.5

PY1611a-b

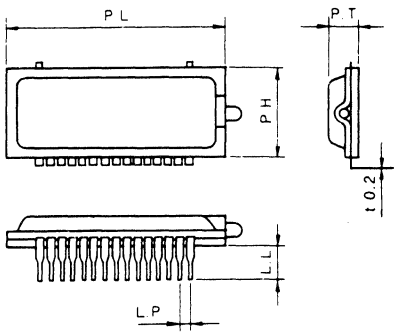

(mm)

	P.H	P.L	P.T	L.P	L.L
a	28.0±1.0	78.0±1.0	7.5±1.0	2.54	2.7
b	33.0±1.0	98.0±1.0	7.8±0.7	2.54	6.2

49. OUTLINE DRAWINGS

PY1612

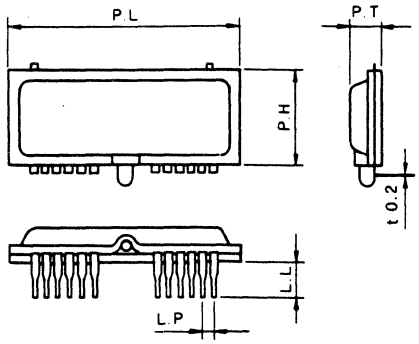

(mm)

P.H	P.L	P.T	L.P	L.L
17.0±1.0	70.0±1.0	6.5 MAX.	2.54	5.8

PY1613

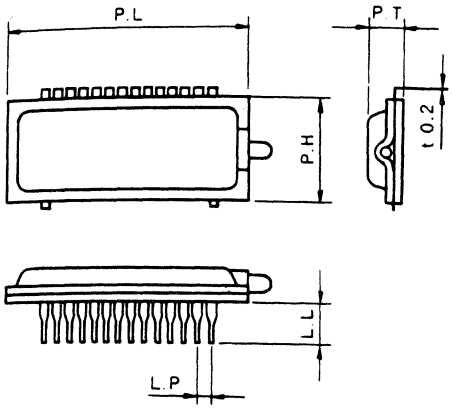

(mm)

P.H	P.L	P.T	L.P	L.L
22.8±1.0	75.2±1.0	7.7±1.0	2.54	10.0

PY1614

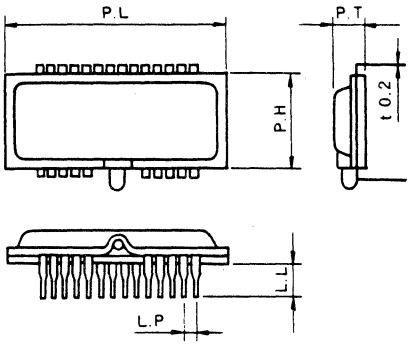

P.H (mm)	P.L (mm)	P.T (mm)	L.P (mm)	L.L (mm)
20.0±1.0	70.0±1.0	$6.5^{+0.5}_{-1.0}$	2.54	9.2

PY1615a-b

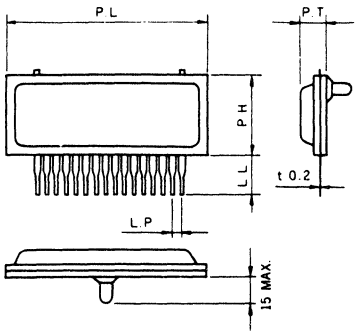

(mm)

	P.H	P.L	P.T	L.P	L.L
a	33.0±1.0	98.0±1.0	8.5 MAX.	2.54	7.0
b	31.0±1.0	127.0±1.5	7.8±1.0	5.08	10.5 3.7

PY1616

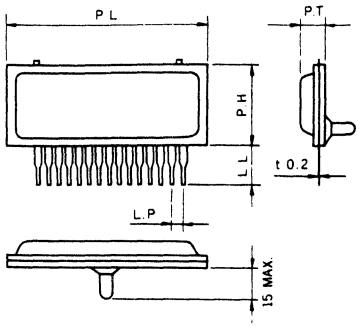

(mm)

P.H	P.L	P.T	L.P	L.L
24.5±1.0	114.4±1.0	6.5±1.0	2.54	15.5

PY1617

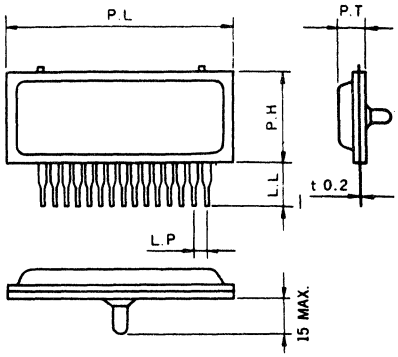

(mm)

P.H	P.L	P.T	L.P	L.L
48.0±1.0	164.0±1.0	10.5±1.0	4.0	10.5

49. OUTLINE DRAWINGS

PY1618

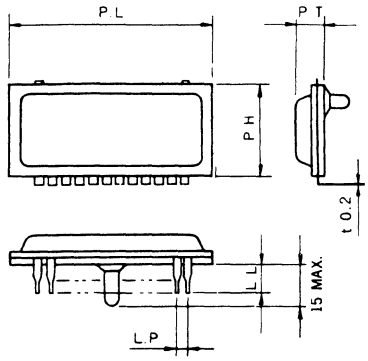

(mm)

P.H	P.L	P.T	L.P	L.L
31.0 ± 1.0	127.0 ± 1.5	7.8 ± 1.0	5.08	10.5 3.7

PY1619

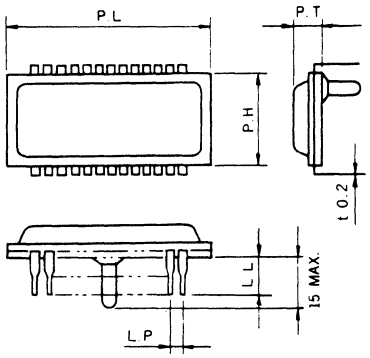

(mm)

P.H	P.L	P.T	L.P	L.L
49.0 ± 1.0	138.0 ± 1.0	11.0 MAX.	2.0	10.2

PY1620a-g

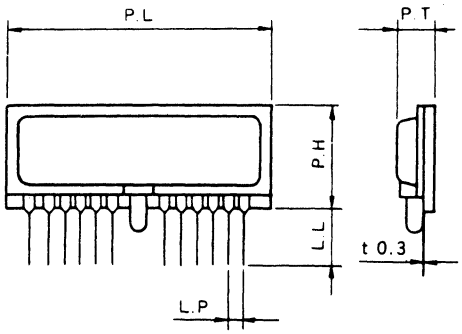

	P.H (mm)	P.L (mm)	P.T (mm)	L.P (mm)	L.L (mm)
a	21.0 MAX.	66.0 MAX.	6.5 MAX.	2.54	14.0
b	26.0 ± 1.0	$93.0^{+1.5}_{-0.5}$	7.8 ± 0.7	2.54	35.0
c	$25.5^{+1.5}_{-1.0}$	$93.0^{+1.5}_{-0.5}$	9.5 MAX.	2.54	14.0 36.0
d	39.0 ± 1.0	$138.0^{+2.0}_{-0.5}$	12.5 MAX.	2.54	14.0
e	$20.0^{+1.2}_{-0.5}$	$86.0^{+1.5}_{-0.5}$	7.5 MAX.	2.54	34.0
f	$25.5^{+1.5}_{-1.0}$	$93.0^{+1.5}_{-0.5}$	9.5 MAX.	2.54	36.0
g	39.0 ± 1.0	$138.0^{+2.0}_{-0.5}$	9.0 ± 1.0	2.54	36.0

PY1621a-b

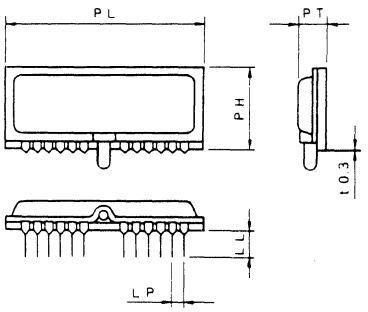

(mm)

	P.H	P.L	P.T	L.P	L.L
a	33.0 ± 1.0	202.0 ± 1.5	9.2 MAX.	2.54	14.0
b	$38.0^{+0.8}_{-0.3}$	$100.0^{+0.8}_{-0.3}$	7.8 ± 0.7	2.54	14.0

PY1622a-e

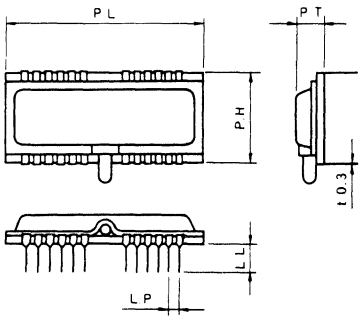

	P.H (mm)	P.L (mm)	P.T (mm)	L.P (mm)	L.L (mm)
a	$41.0^{+0.8}_{-0.3}$	$240.0^{+0.8}_{-0.3}$	$10.0^{+1.0}_{-0.8}$	2.54	14.0
b	$41.0^{+0.8}_{-0.3}$	$240.0^{+0.8}_{-0.3}$	11.0 MAX.	2.54	9.5
c	$50.0^{+0.8}_{-0.3}$	220.0 ± 0.7	12.2 MAX.	2.54	14.0
d	$24.5^{+0.5}_{-0.3}$	65.5 MAX.	7.3 MAX.	2.54	14.0 7.0
e	$23.0^{+0.5}_{-0.3}$	71.5 MAX.	7.5 MAX.	2.54	7.0

PY1623a-b

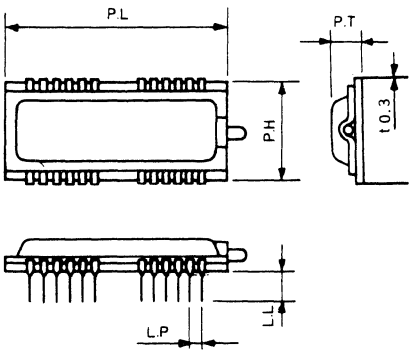

(mm)

	P.H	P.L	P.T	L.P	L.L
a	34.0 ± 1.0	93.0 ± 1.0	9.5 MAX.	2.54	7.4
b	32.7 ± 1.0	122.5 ± 1.0	9.5 MAX.	2.54	14.0

49. OUTLINE DRAWINGS

PY1624

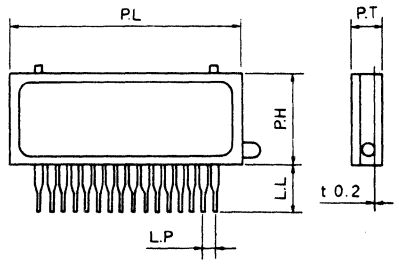

(mm)

P.H	P.L	P.T	L.P	L.L
24.5±1.0	76.0±1.0	6.1±0.7	2.54	15.0 3.2

PY1625a-b

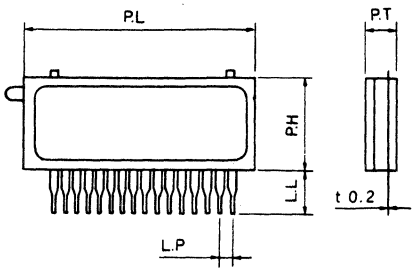

(mm)

	P.H	P.L	P.T	L.P	L.L
a	24.5±1.0	113.0±1.0	7.5±0.7	2.54	16.0
b	20.0±1.0	76.0±1.0	6.1±0.5	2.54	16

PY1626

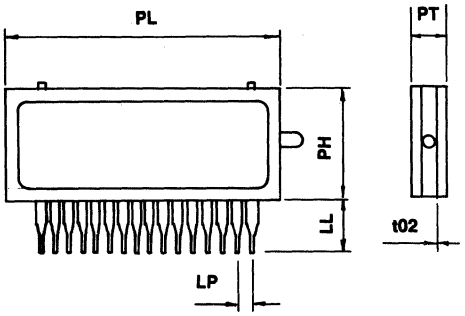

(mm)

P.H	P.L	P.T	L.P	L.L
24.5±1.0	76.0±1.0	6.1±0.7	2.54	15.0 3.2

PY1627

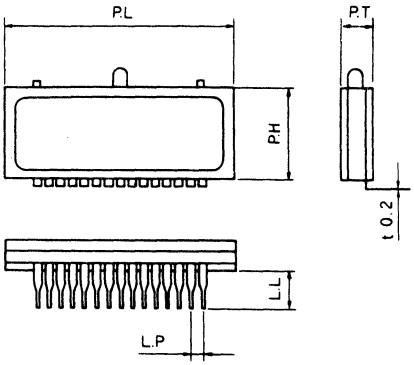

(mm)

P.H	P.L	P.T	L.P	L.L
28.0±1.0	102.0±1.0	8.0±0.7	2.54	13.5

PY1628a-b

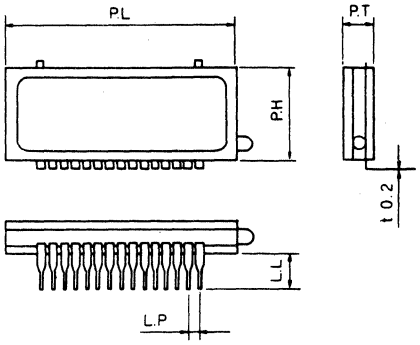

(mm)

	P.H	P.L	P.T	L.P	L.L
a	24.5±1.0	76.0±1.0	6.1±0.7	2.54	15.0 nom. 3.2
b	20	70	6.5	2.54	3.5 9.0

PY1629

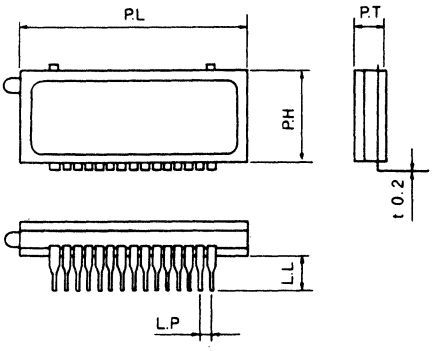

(mm)

P.H	P.L	P.T	L.P	L.L
28.0±1.0	78.0±1.0	7.5±1.0	2.54	3.2

49. OUTLINE DRAWINGS

PY1630

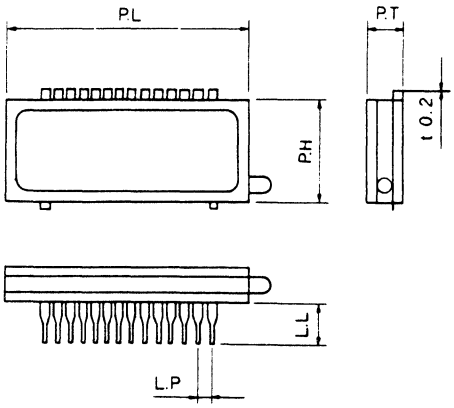

(mm)

P.H	P.L	P.T	L.P	L.L
33.0±1.0	98.0±1.0	8.0±0.7	2.54	9.5

PY1631a-d

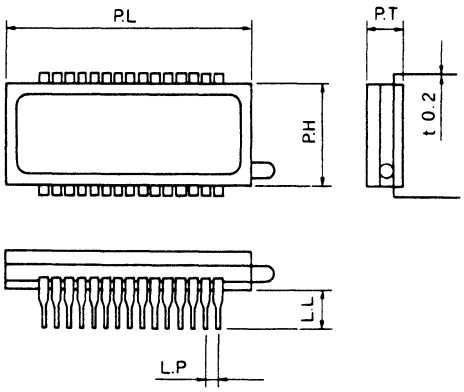

(mm)

	P.H	P.L	P.T	L.P	L.L
a	$20.5^{+0.7}_{-0.5}$	$115.7^{+0.8}_{-0.5}$	6.1±0.7	2.54	6.2
b	20.0±1.0	48.0±1.0	6.1±0.5	2.54	8.2
c	20.0±1.0	48.0±1.0	6.5±0.7	2.54	8.7
d	20.0±1.0	48.0±1.0	6.5±0.7	2.54	8.2

PY1632

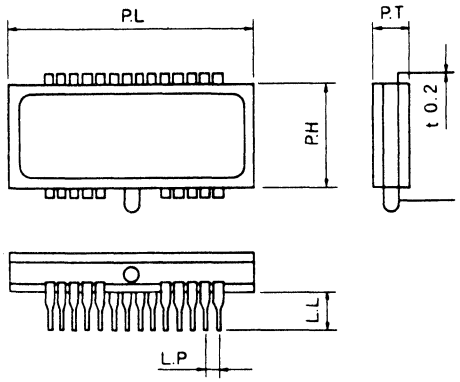

(mm)

P.H	P.L	P.T	L.P	L.L
19.6±1.0	118.0±1.0	6.5±0.7	2.54	9.5

PY1633a-b

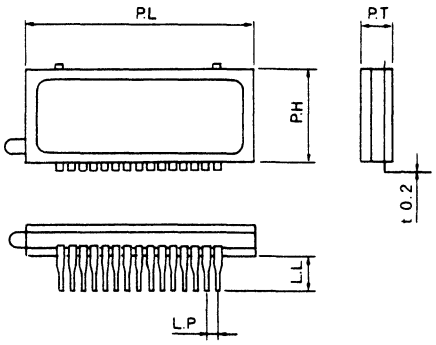

(mm)

	P.H	P.L	P.T	L.P	L.L
a	14.5±1.0	41.0±1.0	6.5±0.7	2.54	8.0
b	28	98	7.5	2.54	13.7

PY1635a-b

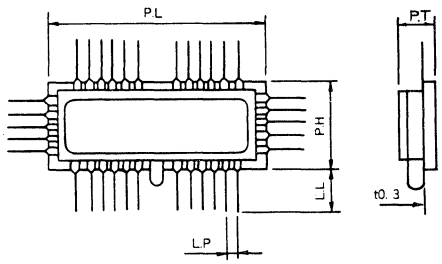

(mm)

	P.H	P.L	P.T	L.P	L.L
a	60.0±1.0	156.0±1.0	11.0 MAX.	1.27	20.0
b	90.0 MAX.	250.0±1.0	14.0 MAX.	2.0	20.0

PY1636

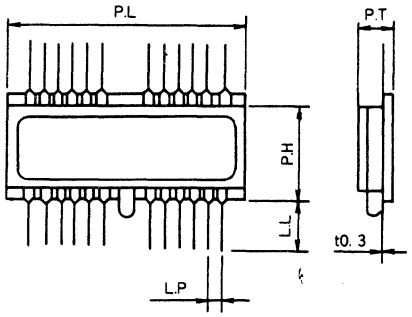

(mm)

P.H	P.L	P.T	L.P	L.L
70.0±1.0	265.0±1.0	12.0 MAX.	1.27	20.0

49. OUTLINE DRAWINGS

PY1634a-t

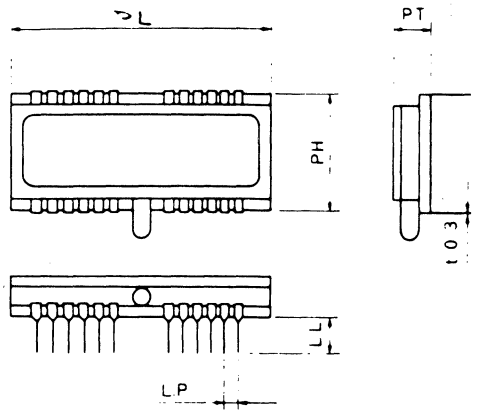

	P.H (mm)	P.L (mm)	P.T (mm)	L.P (mm)	L.L (mm)
a	$26.0^{+0.8}_{-0.3}$	$82.0^{+0.8}_{-0.3}$	7.4 MAX.	2.54	14.0
b	$34.0^{+0.8}_{-0.3}$	$100.0^{+0.8}_{-0.3}$	8.5 MAX.	2.54	14.0
c	$41.0^{+0.8}_{-0.5}$	170.0±1.0	8.5 MAX.	2.54	14.0
d	19.5±0.5	96.7±0.5	6.5±0.5	2.54	6.2
e	70.0±1.0	140.0±1.0	12.3±0.7	2.54	7.4
f	41.0±0.5	$208.0^{+1.0}_{-0.5}$	8.0±0.7	2.54	14.0
g	42.4±1.0	208.0±1.0	9.5±0.7	2.54	14.0
h	41.0±0.5	$202.5^{+0.8}_{-0.3}$	8.0±0.7	2.54	14.0
i	49.0±1.0	244.0±1.0	11.3±0.7	2.54	14.0
j	42.4±1.0	244.0±1.0	9.2±0.7	2.54	14.0
k	58.0±1.0	130.0±1.0	11.3±0.7	2.54	14.0
l	60.0±1.0	208.0±1.0	11.3±0.7	2.54	14.0
m	60.0±1.0	252.0±1.0	12.0 MAX.	2.54	16.0
n	68.0±1.0	208.0±1.0	12.3±0.7	2.54	14.0
o	$34.0^{+0.8}_{-0.5}$	220.0±0.7	8.0±0.7	2.54	14.0
p	$50.0^{+0.8}_{-0.3}$	185.0±0.7	10.3±0.7	2.54	14.0
q	90.0±1.0	240.0±1.0	13.3±0.7	2.54	10.0
r	$49.0^{+0.8}_{-0.3}$	220.0±0.7	12.2 MAX.	2.54	14.0
s	60.0±1.0	238.0±1.0	12.0 MAX.	2.54	14.0
t	67.0±1.0	228.75±1.0	11.0±0.7	2.54	14.0

PY1637

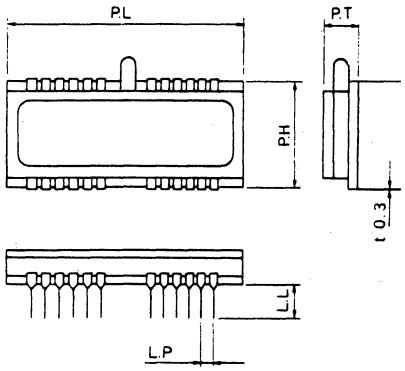

(mm)

P.H	P.L	P.T	L.P	L.L
39.0±1.0	250±1.0	9.7±0.7	2.54	10.0

PY1638

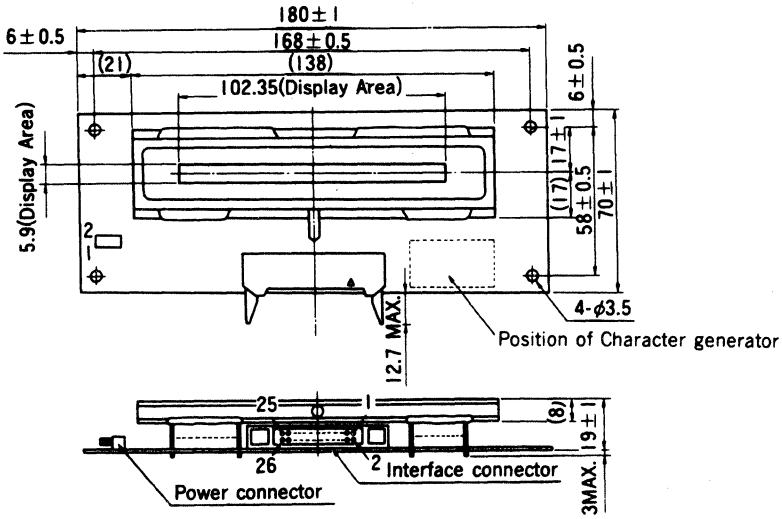

49. OUTLINE DRAWINGS

PY1639

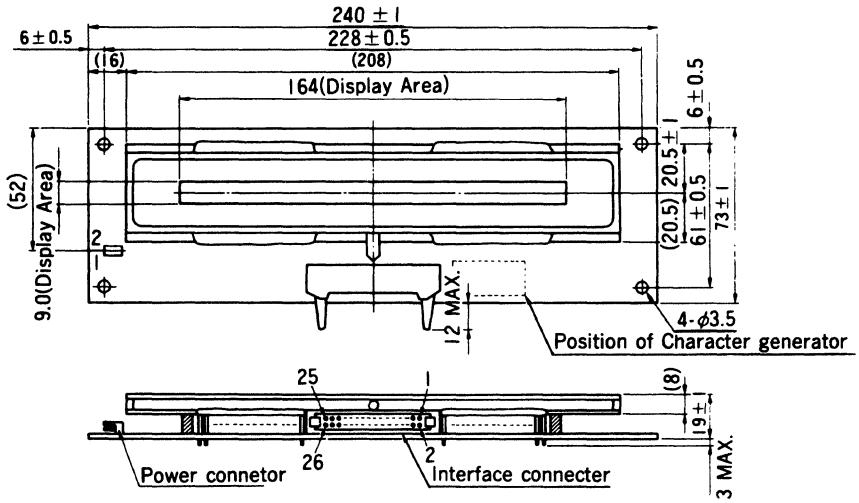

PY1640

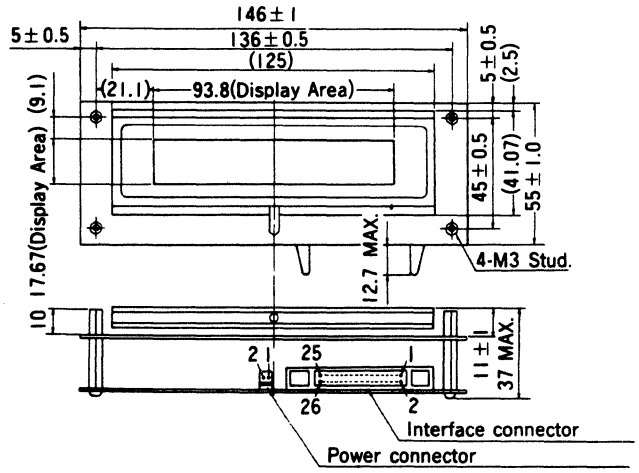

note: Dimensions shown in ( ) are for reference only.

49. OUTLINE DRAWINGS

PY1641

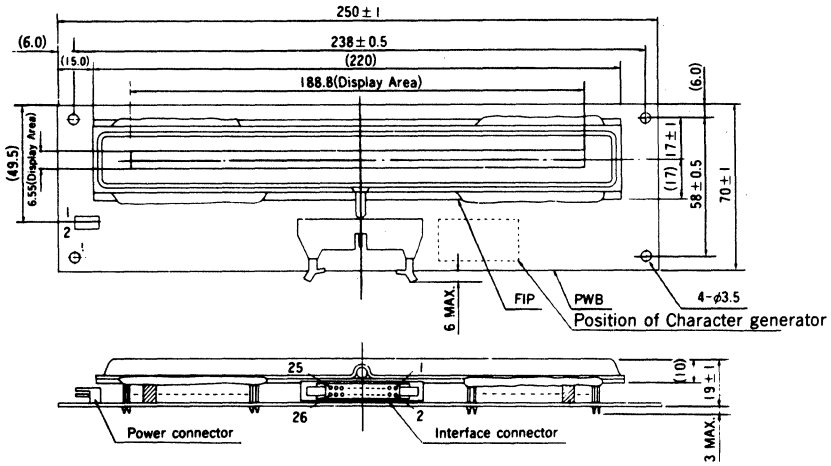

PY1642

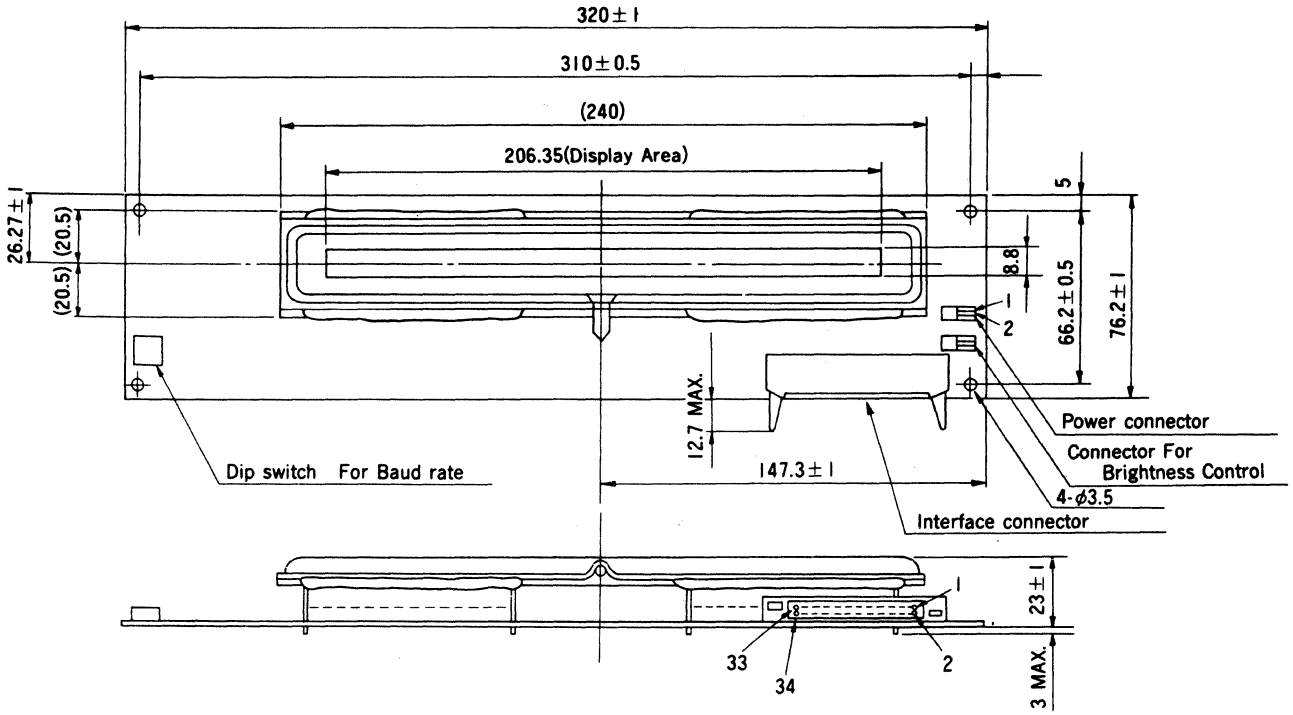

49. OUTLINE DRAWINGS

PY1643

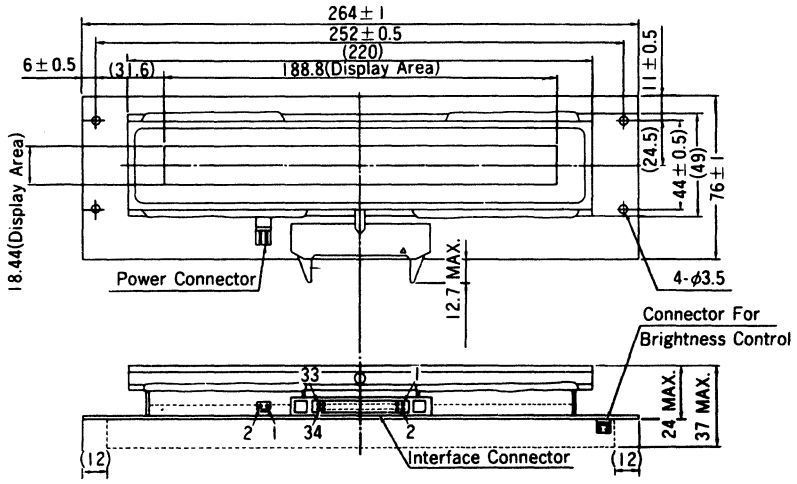

PY1644

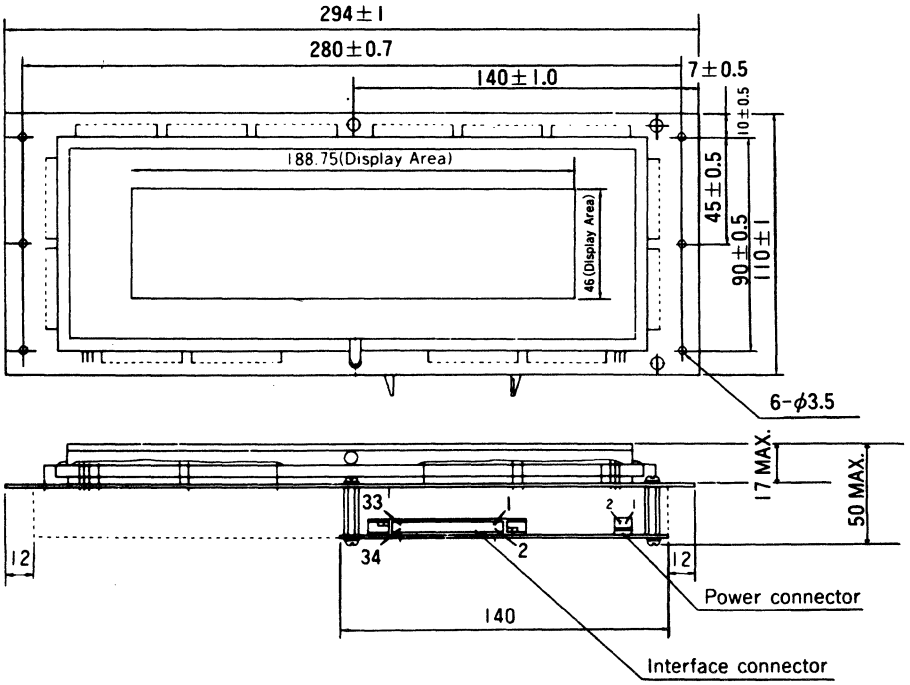

49. OUTLINE DRAWINGS

PY1645

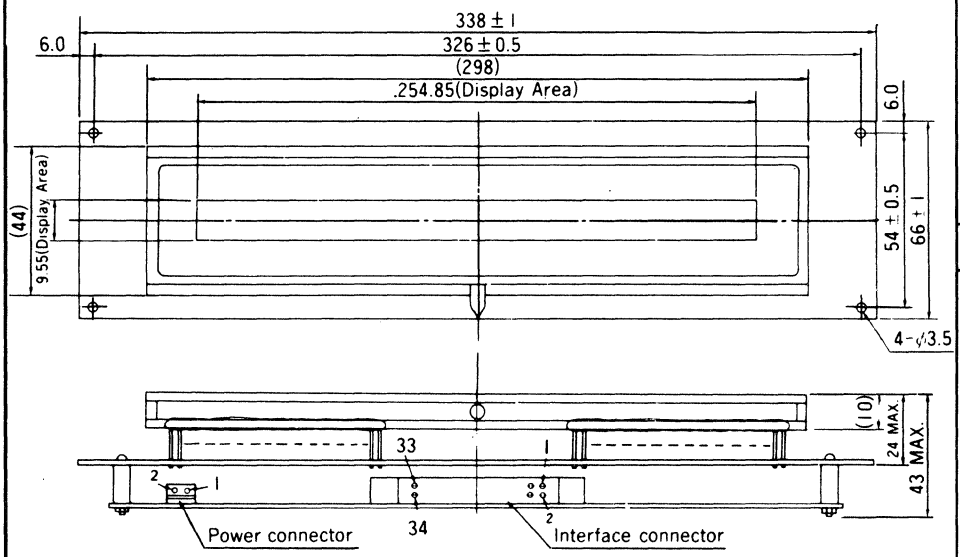

PY1646

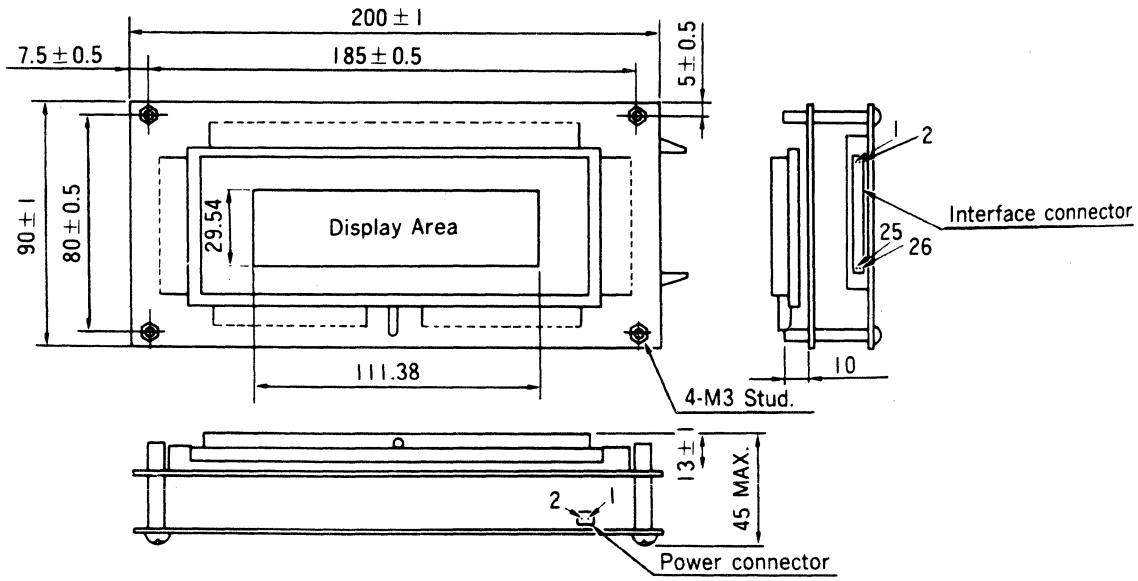

49. OUTLINE DRAWINGS

PY1647

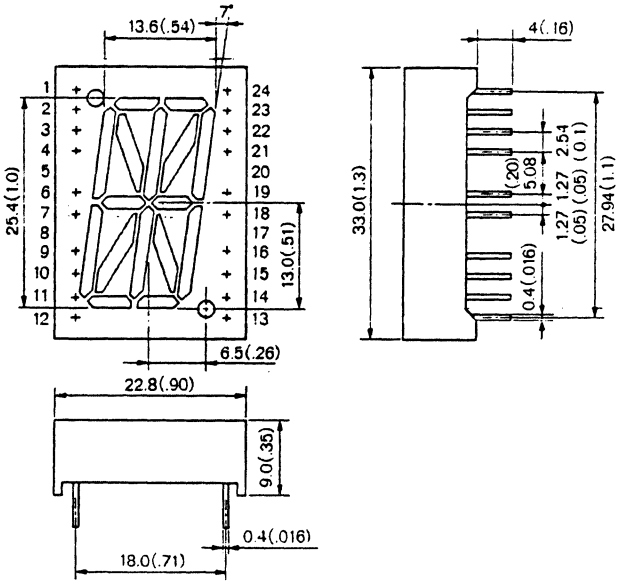

PY1648

Package Dimension in Inches (mm)

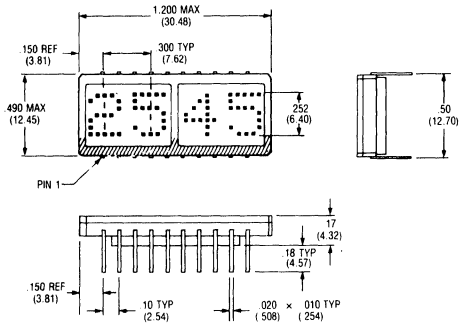

PY1649

Package Dimensions in Inches (mm)

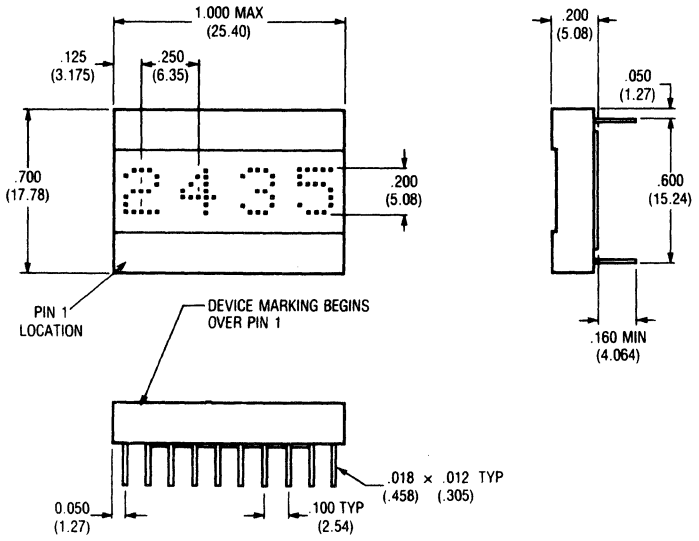

PY1650

Package Dimensions in Inches (mm)

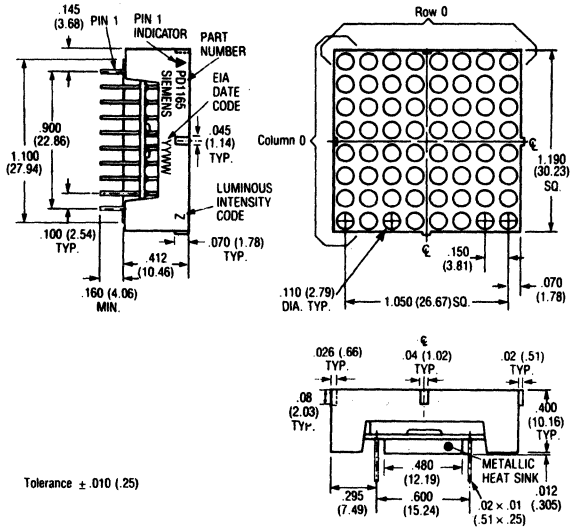

Tolerance ±.010 (.25)

49. OUTLINE DRAWINGS

TO72

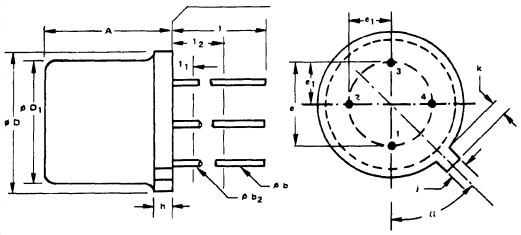

SYMBOL	INCHES MIN.	INCHES MAX.	MILLIMETERS MIN.	MILLIMETERS MAX.	NOTES
A	.170	.210	4.32	5.33	
ϕb	.016	.021	.406	.533	2
ϕb_2	.016	.019	.406	.483	2
ϕD	.209	.230	5.31	5.84	
ϕD_1	.178	.195	4.52	4.95	
e	.100 T.P.		2.54 T.P.		4
e_1	.050 T.P.		1.27 T.P.		4
h		.030		.762	
j	.036	.046	.914	1.17	
k	.028	.048	.711	1.22	3
l	.500		12.70		2
l_1		.050		1.27	2
l_2	.250		6.35		2
α	45° T.P.		45° T.P.		4,6

NOTES:

1. (FOUR LEADS). MAXIMUM NUMBER OF LEADS OMITTED IN THIS OUTLINE, "NONE" (0). THE NUMBER AND POSITION OF LEADS ACTUALLY PRESENT ARE INDICATED IN THE PRODUCT REGISTRATION! OUTLINE DESIGNATION DETERMINED BY THE LOCATION AND MINIMUM ANGULAR OR LINEAR SPACING OF ANY TWO ADJACENT LEADS.
2. (ALL LEADS) ϕb_2 APPLIES BETWEEN l_1 AND l_2. ϕb APPLIES BETWEEN l_2 AND .500" (12.70 MM) FROM SEATING PLANE. DIAMETER IS UNCONTROLLED IN l_1 AND BEYOND .500" (12.70 MM) FROM SEATING PLANE.
3. MEASURED FROM MAXIMUM DIAMETER OF THE PRODUCT.
4. LEADS HAVING MAXIMUM DIAMETER .019" (.483 MM) MEASURED IN GAGING PLANE .054" (1.37 MM) + .001" (.025 MM) − (.000 MM) BELOW THE SEATING PLANE OF THE PRODUCT SHALL BE WITHIN .007" (.178MM) OF THEIR TRUE POSITION RELATIVE TO A MAXIMUM WIDTH TAB.
5. THE PRODUCT MAY BE MEASURED BY DIRECT METHODS OR BY GAGE.
6. TAB CENTERLINE.

TO46

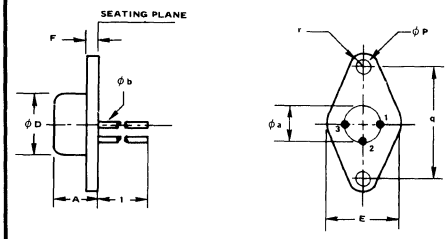

SYMBOL	INCHES MIN.	INCHES MAX.	MILLIMETERS MIN.	MILLIMETERS MAX.	NOTES
ϕa	.200 NOMINAL		5.08 NOMINAL		
A		.260		6.60	
ϕb	.016	.022	.406	.559	1
ϕD		.320		8.13	
E		.390		9.91	
F		.070		1.78	
l	1.500		38.10		1
ϕp	.120	.130	3.05	3.30	3
q	.552	.572	14.02	14.53	
r		.114		2.90	2

NOTES:

1. THREE LEADS.
2. BOTH ENDS.
3. TWO MOUNTING HOLES.

THIS OUTLINE DOES NOT MEET THE MINIMUM CRITERIA EATABLISHED BY JS - 10 FOR REGISTRATION.

THIS OUTLINE DOES NOT MEET THE MINIMUM CRITERIA ESTABLISHED BY JS-10 FOR REGISTRATION.

THIS OUTLINE DOES NOT MEET THE MINIMUM CRITERIA ESTABLISHED BY JS-10 FOR REGISTRATION.

TO52

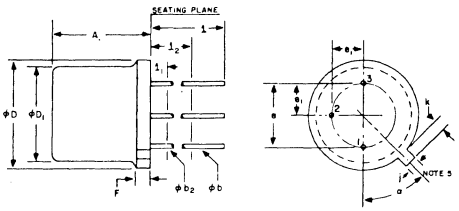

SYMBOL	INCHES MIN.	INCHES MAX.	MILLIMETERS MIN.	MILLIMETERS MAX.	NOTES
A	.115	.150	2.92	3.81	
ϕb		.021		.533	1
ϕb_2	.016	.019	.406	.483	1
ϕD	.209	.230	5.31	5.84	
ϕD_1	.178	.195	4.52	4.95	
e	.100 T.P.		2.54 T.P.		2
e_1	.050 T.P.		1.27 T.P.		
F		.030		.762	
j	.036	.046	.914	1.17	
k	.028	.048	.711	1.22	3
l	.500		12.70		1
l_1		.050		1.27	1
l_2	.250		6.35		
α	45° T.P.				

NOTES:

1. (THREE LEADS) ϕb_2 APPLIES BETWEEN l_1 AND l_2. ϕb APPLIES BETWEEN l_2 AND .5" (12.70 MM) FROM SEATING PLANE. DIAMETER IS UNCONTROLLED IN l_1 AND BEYOND .5" (12.70 MM) FROM SEATING PLANE.
2. LEADS HAVING MAXIMUM DIAMETER .019" (.483 MM) MEASURED IN GAGING PLANE .054" (1.37 MM) + .001" (.025 MM) - .000" (.000 MM) BELOW THE SEATING PLANE OF THE DEVICE SHALL BE WITHIN .007" (.178 MM) OF THEIR TRUE POSITIONS RELATIVE TO A MAXIMUM-WIDTH TAB.
3. MEASURED FROM MAXIMUM DIAMETER OF THE ACTUAL DEVICE.
4. THE DEVICE MAY BE MEASURED BY DIRECT METHODS OR BY THE GAGE AND GAGING PROCEDURE DESCRIBED ON GAGE DRAWING GS-2.
5. TAB CENTERLINE.

49. OUTLINE DRAWINGS

TO66

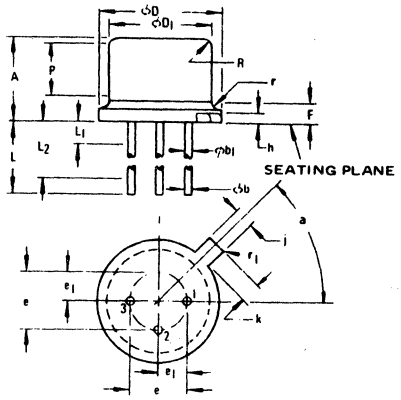

NOTES:

1. REFER TO APPLICABLE SYMBOL LIST.
2. DIMENSIONING AND TOLERANCING PER ANSI Y14.5, 1973.
3. $Øb_1$ APPLIES BETWEEN L_1 AND L_2. Øb APPLIES BETWEEN L_2 AND L. DIAMETER IS UNCONTROLLED IN L_1 AND BEYOND L MINIMUM.
4. LEADS HAVING A MAXIMUM DIAMETER OF .482 MEASURE IN GAUGING PLANE 1.732-1.397 BELOW THE REFERENCE PLANE OF THE DEVICE SHALL BE LOCATED AT POSITION TOLERANCE WITHIN .356 DIAMETER RELATIVE TO MAXIMUM WITH TAB. DEVICE MAY BE MEASURED BY DIRECT METHODS OR BY GAUGE AND GAUGING PROCEDURES DESCRIBED ON GAUGE DRAWING GS-2.
5. MEASURED FROM MMC OF DEVICE.
6. $ØD_1$ SHALL NOT VARY MORE THAN .254 IN ZONE P. ZONE P CONTROLLED FOR AUTOMATIC HANDLING.
7. VARIATION AF HAS FOUR LEADS.
8. VARIATION AG HAS NO INDEX TAB.
9. CONTROLLING DIMENSIONS: INCH.

SYMBOL	INCHES MIN.	INCHES MAX.	MILLIMETERS MIN.	MILLIMETERS MAX.	NOTES
A	.250	.340	6.35	8.64	
Øb	.028	.034	.711	.863	
ØD		.620		15.75	
$ØD_1$	.470	.500	11.94	12.70	
e	.190	.210	4.83	5.33	
e_1	.093	.107	2.36	2.72	
F	.050	.075	1.27	1.91	2
F_1		.050		1.27	1
l	.360		9.14		
Øp	.142	.152	3.61	3.86	
q	.958	.962	24.33	24.43	
r_1		.350		8.89	
r_2		.145		3.68	
s	.570	.590	14.48	14.99	

TO206

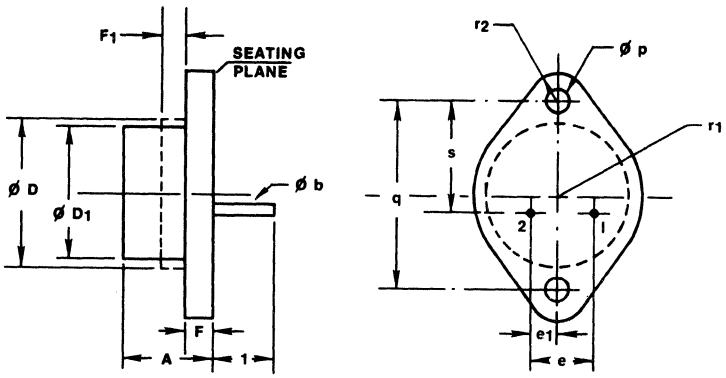

	A	Øb	Øb1	ØD	ØD1	e	e1	F	h	l	k	L	L1	L2	P	R	r	r1	a	NOTES
TC206AA	.170	.016	.016	.209	.178	.100	.050	.030		.036	.028	.500	.050	.250		•			45*	1,2,9
	.210	.021	.019	.230	.195	BSC	BSC	MAX		.046	.048	MIN	MAX	MIN					BSC	
NOTES		3	3			4	4				5	3	3	3						
TC206AB	.065	.016	.016	.209	.178	.100	.050	.040		.036	.028	.500	.050	.250					45*	1,2,9
	.085	.021	.019	.230	.195	BSC	BSC	MAX		.046	.048	MIN	MAX	MIN					BSC	
NOTES		3	3			4	4				5	3	3	3						
TC206AC	.115	.021	.016	.209	.178	.100	.050	.030		.036	.028	.500	.050	.250			✓		45*	1,2,9
	.150	MAX	.019	.230	.195	BSC	BSC	MAX		.046	.048	MIN	MAX	MIN					BSC	
NOTES		3	3			4	4				5	3	3	3						
TC206AD	.050	.016	.016	.209	.178	.100	.050	.040		.036	.028	.500	.050	.250					45*	1,2,9
	.060	.021	.019	.230	.185	BSC	BSC	MAX		.046	.048	MIN	MAX	MIN					BSC	
NOTES		3	3			4	4				5	3	3	3						
TC206AE	.170	.021	.016	.209	.182	.100	.050	.023	.005	.036	.030	.500	.020	.250	.125	.010	.010	.007	45*	1,2,9
	.210	MAX	.019	.230	.192	BSC	BSC	MAX	.015	.046	.046	.625	MAX	MIN	MIN	MIN	MAX	MAX	BSC	
NOTES		3	3			4	4				5	3	3	3	6					
TC206AF	.170	.016	.016	.209	.178	.100	.050	.030		.036	.028	.500	.050	.250					45*	1,2,7,9
	.210	.021	.019	.230	.195	BSC	BSC	MAX		.046	.048	MIN	MAX	MIN					BSC	
NOTES		3	3			4	4				5	3	3	3						
TC206AG	.320	.021	.016	.255	.225	.100	.050	.010				1.500	.050	.250						1,2,8,9
	.350	MAX	.019	.275	.240	BSC	BSC	.030				MIN	MIN	MAX						
NOTES		3	3			4	4					3	3	3						

49. OUTLINE DRAWINGS

TO18

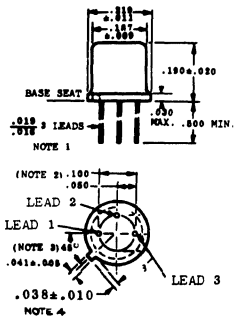

NOTES FOR TO18:

1. The specified lead dia. applies to the zone between .050 and .250 from the base seat. Between .250 and end of lead a max. of .021 is held. Outside of these zones the lead dia. is not controlled.
2. Leads having max. dia. of .019 measured in gaging plane .054 -.001,-.000 below the seating plane of the device shall be within .007 of their true positions relative to the max. tab width.
3. Index tab for visual orientation only.
4. Measured from max. dia. of the actual device.

TO5

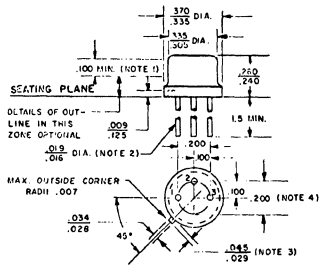

TO 5 NOTES:

1. This zone is controlled for automatic handling. The variation in actual diameter within the zone shall not exceed .010 .
2. The specified lead diameter applies in the zone between .050 and .250 from the seating plane. Between .250 and 1.5 a maximum of .021 diameter is held. Outside of these zones the lead diameter is not controlled.
3. Measured from max. diameter of the actual device.
4. Leads having maximum diameter (.019) measured in gaging plane .054 - .001-.000 below the seating plane of the device shall be within .007 of their true locations relative to a maximum-width tab.
5. The device may be measured by direct methods or by the gage and gaging procedure described on the base gage drawing.

TO8

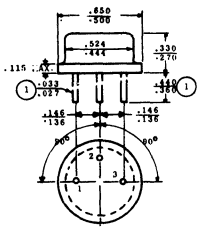

TO8 Note: 1. Three Leads

49. OUTLINE DRAWINGS

TO92

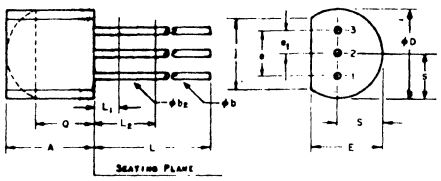

SYMBOL	INCHES MIN.	INCHES MAX.	MILLIMETERS MIN.	MILLIMETERS MAX.	NOTES
A	.170	.210	4.58	5.33	
Øb	.016	.021	.407	.533	1, 3
Øb2	.016	.019	.407	.482	3
ØD	.175	.205	4.96	5.20	
E	.125	.165	3.94	4.19	
e	.095	.105	2.42	2.66	
e1	.045	.055	1.15	1.39	
J	.135		3.43		
L	.500		12.70		1, 3
L1		.050		1.27	3
L2	.250		6.35		3
Q	.115		2.93		2
S	.080	.105	2.42	2.66	

NOTES:

THREE LEADS

CONTOUR OF THE PACKAGE BEYOND THIS ZONE IS UNCONTROLLED.

(THREE LEADS) Øb2 APPLIES BETWEEN L1 AND L2. Øb APPLIES BETWEEN L2 AND .500" (12.70 MM) FROM SEATING PLANE. DIAMETER IS UNCONTROLLED IN L1 AND BEYOND .500" (12.70 MM) FROM SEATING PLANE.

TO93

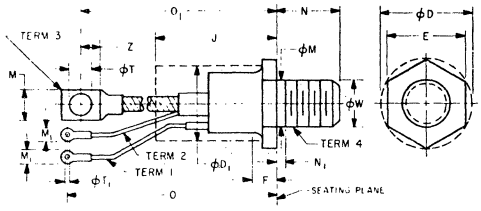

MILLIMETER DIMENSIONS ARE DERIVED FROM ORIGINAL INCH DIMENSIONS

SYMBOL	INCHES MIN.	INCHES MAX.	MILLIMETERS MIN.	MILLIMETERS MAX.	NOTES
ØD	-	1.443	-	36.65	-
ØD1	-	1.212	-	30.78	1
E	1.212	1.250	30.79	31.75	-
F	.230	1.000	5.9	25.4	5
J	-	3.625	-	92.07	1,7
M	.530	.755	13.5	19.1	2
ØM	.660	.749	16.77	19.02	3
M1	.215	.300	5.47	7.62	2,8
N	1.047	1.077	26.60	27.35	-
N1	-	.156	-	3.96	3
O	7.350	8.100	186.7	205.7	-
O1	7.350	8.100	186.7	205.7	-
ØT	.260	.350	6.61	8.89	-
ØT1	.140	.155	3.56	3.93	-
ØW	.7029	.7094	17.854	18.018	4
Z	.340	-	8.64	-	6

	ISSUE
A	RELEASE NO. 5072
B	RELEASE NO. 5072A

NOTES:

1. THE BODY OF THE DEVICE WITH EXCEPTION OF THE HEXAGON, THREAD, AND FLEXIBLE LEAD EXTENSIONS LIES WITHIN ØD1 AND LENGTH J.
2. ANGULAR ORIENTATION OF THESE TERMINALS WITH RESPECT TO HEXAGON PORTION IS UNDEFINED. SQUARE OR RADIUS ON END OF TERMINALS IS OPTIONAL.
3. LENGTH OF INCOMPLETE OR UNDERCUT THREADS OF ØM.
4. PITCH DIAMETER OF 3/4-16UNF-2A (COATED) THREADS (ASA B1.1-1960).
5. A CHAMFER (OR UNDERCUT) ON ONE OR BOTH ENDS OF HEXAGON PORTION IS OPTIONAL.
6. MINIMUM FLAT.
7. SEATED HEIGHT WITH LEAD BENT AT RIGHT ANGLES.
8. FLEXIBLE LEADS FOR TERMINALS 1 AND 2 ARE IDENTIFIED BY COLOR CODING FOR SPECIFIC APPLICATIONS.

TO116

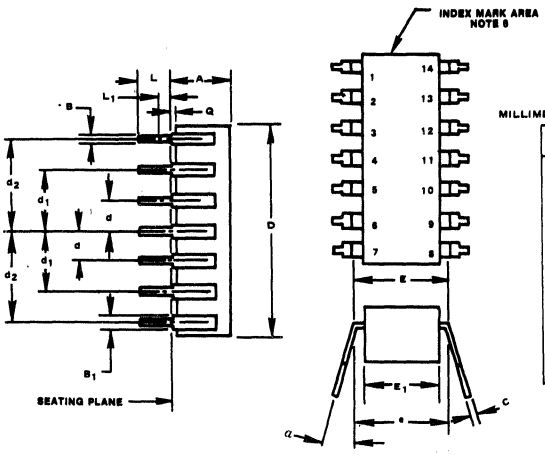

MILLIMETER DIMENSIONS ARE DERIVED FROM BASIC INCH DIMENSIONS

SYMBOL	INCHES MIN.	INCHES MAX.	MILLIMETERS MIN.	MILLIMETERS MAX.	NOTES
A	—	.200	—	5.08	
B	.015	.023	.381	.584	3,7
B1	.030	.070	.77	1.77	3,7
C	.008	.015	.204	.381	3
D	.660	.785	17.4	19.9	
d	.090	.110	2.29	2.29	1
d1	.190	.210	4.83	5.33	1
d2	.290	.310	7.37	7.87	1
E	—	.325	—	8.25	5
E1	.220	.280	5.59	7.11	
e	.290	.310	7.37	7.87	4
L	.100	—	2.540	—	1,3
L1	—	.030	—	.76	2
Q	.020	—	.51	—	
α	0°	15°	0°	15°	

NOTES:

1. LEADS MISSING FROM THEIR DESIGNATED POSITIONS SHALL BE COUNTED WHEN NUMBERING LEADS FOR SPECIAL APPLICATIONS.
2. LEAD SPACING SHALL BE MEASURED WITHIN THIS ZONE.
3. TYPICAL ALL LEADS.
4. INSTALLED POSITION OF LEAD CENTERS.
5. OVERALL INSTALLED WIDTH.
6. INDEX TO BE VISIBLE FROM TOP, THIS END ONLY.
7. LEAD TRANSITION GEOMETRY FROM B TO B1 OPTIONAL ON BODY SIDE OF SEATING PLANE.

MANUFACTURERS' DEVICE NUMBERING KEYS

SECTION 50
MANUFACTURERS' DEVICE NUMBERING KEYS

AEG – TELEFUNKEN

DISCRETE DEVICES

MATERIAL
- A – GERMANIUM (Materials with a band gap 0.6-1.0 eV)[1]
- B – SILICON (Materials with a band gap 1.0-1.3 eV)[1]
- C – GALLIUM-ARSENIDE (Materials with a band gap > 1.3 eV)[1]
- R – COMPOUND MATERIALS (For instance Cadmium-Sulphide)

FUNCTION
- A – DIODE: Detection, switching, mixer
- B – DIODE: Variable capacitance
- C – TRANSISTOR: Low power, audio frequency
- D – TRANSISTOR: Power, audio frequency
- E – DIODE: Tunnel
- F – TRANSISTOR: Low power, high frequency
- G – DIODE: Oscillator, Miscellaneous
- H – DIODE: Magnetic sensitive
- K – HALL EFFECT DEVICE: in an open magnetic circuit
- L – TRANSISTOR: Power, high frequency
- M – HALL EFFECT DEVICE: in a closed magnetic circuit
- N – PHOTO COUPLER
- P – DIODE: Radiation sensitive
- Q – DIODE: Radiation generating
- R – THYRISTOR: Low power
- S – TRANSISTOR: Low power, switching
- T – THYRISTOR: Power
- U – TRANSISTOR: Power, switching
- X – DIODE: Multiplier, e.g. varactor, step recovery
- Y – DIODE: Rectifying, booster
- Z – DIODE: Voltage reference or voltage regulator. Transient suppressor diode

SERIAL NUMBER
- Three figures, running from 100 to 999, for devices primarily intended for consumer equipment.
- One letter (Z, Y, X, etc.) and two figures running from 10 to 99, for devices primarily intended for professional equipment.

A version letter can be used to indicate a deviation of a single characteristic, either electrically or mechanically.
The letter never has a fixed meaning, the only exception being the letter R, indicating reversed voltage, i.e. collector to case.

[1]) The materials mentioned are examples.

EXAMPLE

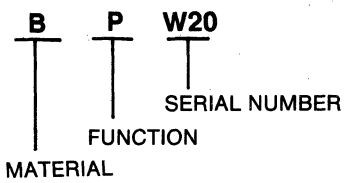

AND, INC.

LIQUID CRYSTAL DISPLAYS

LIQUID CRYSTAL MATERIAL

No Designator	-Standard Grade	(-20 to +50° C)
A	-High Temp.	(-20 to +80° C)
W	-Wide Temp.	(-30 to +85° C)

VIEWING MODE

Viewing Mode	Configuration	
	Pinned	Pinless
Transmissive	A	F
Reflective Silver Bead	C	H
Reflective Aluminum Foil	D	I
Transflective	E	J

POLARIZER

No Designator	-Standard Polarizer
B	-Blue Polarizer
G	-Green Polarizer
R	-Red Polarizer
U	-High Temp./High Humidity Polarizer

EXAMPLE

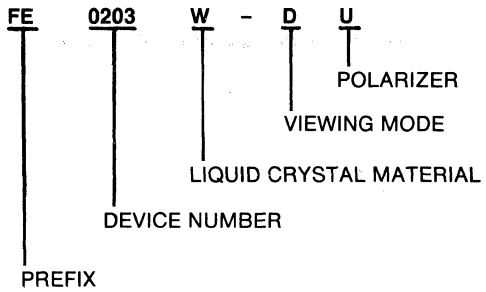

EPSON AMERICA, INC.

LIQUID CRYSTAL DISPLAYS

EXAMPLE

LD - B U 6 543 A Z - 2 B

- B: COLOR CODE
- 2: DERIVED NUMBER
- Z: CONNECTOR
- A: EQUIPMENT
- 543: SERIAL NUMBER
- 6: APPLICATION
- U: VIEWING ANGLE
- B: FLUID
- LD: MODE

MODE
- LD – Panel or panel with pins
- M* – Module

FLUID
- No Designator – Yellow
- B – White
- G – Guest - Host
- H – High Quality
- J – Guest - Host High Quality

VIEWING ANGLE
- No Designator – 06:00 O'clock (Bottom to up)
- U – 12:00 O'clock
- V – 09:00 O'clock
- W – 03:00 O'clock
- Y – 03:00/09:00 O'clock
- T – 04:30/07:30 O'clock
- S – 01:30/10:30 O'clock

EQUIPMENT

Symbol	Mode	Upper Parts	Rear Parts
Blank	Reflective	△	O
A		O	O
B		O	X
C	Cell Only	X	X
D	Transmissive	△	O
E		O	O
F		O	X
G	Transflective	△	O
J		O	O
K		O	X

Note 1. O–Glued, △–Attached, X–Excluded
2. *Upper Parts: Upper polarizer with U.V. filter
*Rear Parts:
1) Reflective– Polarizer with reflector
2) Transmissive–Polarizer with U.V. filter
3) Transflective–Polarizer with U.V. filter and transflector.

CONNECTOR
- No Designator – Rubber Connector Type
- Z – DIL Pin Connector Type
- Y – Spring Pin Connector Type
- X – With FPCB Type
- W – Soldering Type

EPSON AMERICA, INC. (CONT'D)

FORMER LIQUID CRYSTAL DISPLAYS

EXAMPLE

LD - B U 3 21 B Z

- Z: SPECIALITY
- B: EQUIPMENT
- 21: SERIAL NUMBER
- 3: APPLICATION
- U: VIEWING ANGLE
- B: FLUID
- LD: MODE

MODE
- LD – Panel or panel with pins
- M* – Module

FLUID
- No Designator – Yellow fluid
- B – White fluid

VIEWING ANGLE
- No Designator – 06:00 O'clock (Bottom to up)
- U – 12:00 O'clock

EQUIPMENT

Symbol \ Parts	UV Filter	Upper polarizer	Rear polarizer	Reflector
(Blank)	△	△	O	O
A	X	O	O	O
B	O	O	O	O
C	X	X	X	X
D	X	X	O	X
E	O	O	O	X

Note 1. (O–Glued, △–Attached, X–Excluded)
2. Rear polarizer which is not attached by reflector includes UV filter

SPECIALITY
- No Designator – Not special
- Z – Special (Ex. with DIL pins)

HAMLIN, INC.

LIQUID CRYSTAL DISPLAYS

DEVICE NUMBER
Four digit number

VIEWING MODE
1-Transmissive
Solid Segments
3-Reflective
Solid Segments

POLARIZER
0-None
1-Commercial Grade
H-Type
6-High Stability
K-Sheet

BACKING
0-None
3-Reflective - Smooth
5-Transflective - Smooth
6-Reflective - Textured
7-Reflective - Textured

FLUID
05-Commercial Grade
06-High Temperature
01-Instrument Grade

PACKAGE
0-With Dil pins (if basic part NBR. is Dil display) if Elastomeric display use 0 also
5-Without Dil pins

EXAMPLE

3906 3 1 5 05 0

DEVICE NUMBER
VIEWING MODE
POLARIZER
BACKING
FLUID
PACKAGE

INDUSTRIAL ELECTRONIC ENGINEERS, INC.

LIQUID CRYSTAL DISPLAYS

PREFIX
LCD-Liqid Crystal Display

DEVICE NUMBER

DEVICE NUMBER	DIGIT SIZE	NO. OF DIGITS
5676-	.350" (8.89MM)	3.5
5672-	.350" (8.89MM)	4.0
5675-	.350" (8.89MM)	4.5
5660-	.400" (10.16MM)	4.5
5666-	.400" (10.16MM)	5.0
5654-	.500" (12.70MM)	3.5
5657-	.500" (12.70MM)	4.0
5663-	.500" (12.70MM)	6.0
5665-	.500" (12.70MM)	8.0
5655-	.700" (17.78MM)	3.5
5658-	.700" (17.78MM)	4.0

VIEWING MODE
R-Reflective mode
F-Transflective mode

CONNECTOR
1-Slip-on connector with .200" length pins
3-Slip-on connector with .100" length pins
0-No pins-"0"

FLUID
5-ECONOMY MODEL (Commercial grade)
7-HIGH PERFORMANCE MODEL (Wide temperature/high humidity)

EXAMPLE

LCD 5654 R - 1 5

PREFIX
DEVICE NUMBER
VIEWING MODE
CONNECTOR
FLUID

Continued on next page

INTERNATIONAL RECTIFIER

DEVICE NUMBERING KEY

SILICON LIGHT SENSORS

WIDTH
- 05 – 0.20" (0.5 cm)
- 10 – 0.40" (1.0 cm)
- 20 – 0.80" (2.0 cm)

LENGTH
- 05 – 0.20" (0.5 cm)
- 10 – 0.40" (1.0 cm)
- 20 – 0.80" (2.0 cm)

GRIDDED
- Add "G" for cells Larger than 0.4" x 0.4" (1.0 cm x 1.0 cm)

DEVICE TYPE
- E – P on N
- A – N on P

EFFICIENCY
- Minimum conversion efficiency
  - 5 – 5%
  - 6 – 6%
  - 7 – 7%
  - 8 – 8%
  - 9 – 9%
  - 10 – 10%
  - 11 – 11%
  - 12 – 12%

LEADS
- PL – Pigtail Leads

EXAMPLE

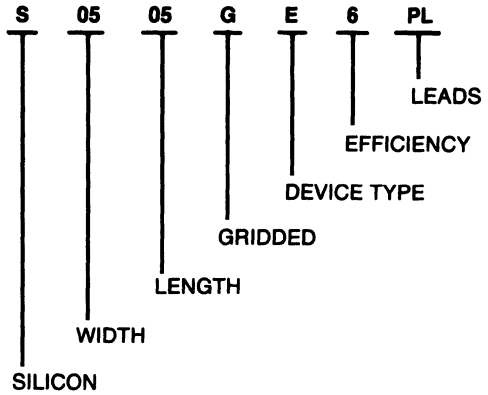

LIQUID XTAL DISPLAY, INC.

LIQUID CRYSTAL DISPLAYS

SERIES
- 0-99-Standard Models
- 100-999-Custom Models

TERMINATION
- E-Edge Mount (For Elastomeric Connection)
- D-Dual Edge, In-line Pins

L C FLUID
- 5-3-9V rms, -15° C to +55° C
- 7-7-20V rms, -15° C to +83° C
- 9-5-9V rms, -20° C to +90° C

VIEWING MODE
- T-Transmissive
- R-Reflective
- F-Transflective
- S-Other

GLASS SIZE
- 02-2.000 X .900; 2.000 X .700
- 03-2.000 X 1.200; 2.000 X .900
- 05-2.750 X 1.200; 2.750 X .900
- 08-2.750 X 1.500; 2.750 X 1.200
- 09-3.695 X 1.200; 3.695 X .900
- 10-3.695 X 1.500; 3.695 X 1.200
- 11-3.695 X 1.800; 3.695 X 1.500
- 19-1.100 X 1.200; 1.100 X .900
- 21-3.200 X 1.500; 3.200 X 1.200
- 31-2.600 X .900; 2.500 X .700
- 32-4.800 X .900; 4.700 X .700
- 33-4.800 X 1.300; 4.700 X 1.100
- 37-2.500 X .900; 2.500 X .700

MODIFICATIONS
- B-Short Pins 0.185"
- C-Short Pins 0.160"
- E-Illumination Panel
- G-High humidity polarizer (K Sheet) 85% RH at 50° C for 30 days
- H-Aluminum Reflector
- K-Transflective Polarizer
- L-Formed leads
- Z-Custom

Note: Unless specified otherwise (by appropriate letter from modifications) display will be supplied with standard polarizer, reflector, pin length (0.285" ± 0.010") and pin configuration.

EXAMPLE

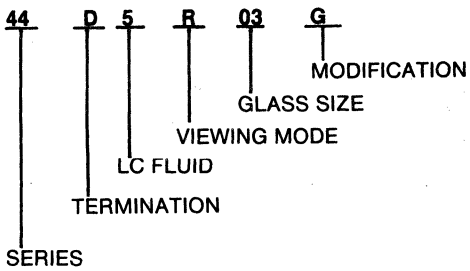

LEDCO DIV. OF WILBRECHT ELECTRONICS

LIGHT EMITTING DIODES

TERMINATION
- 0 - Bi-pins
- 1 - Leads

EMISSION COLOR
- 0 - Red
- 3 - Green
- 4 - Amber

LENS COLOR CODE
- 1 - Amber
- 2 - Red
- 4 - Green
- 5 - Clear

RESISTOR VALUE CODE

Resistor Value Code	Voltage	Current (mA)	Internal Resistor (Ohms)
001	2	10 or 20	none
002	5	10	330
003	6	10	390
004	10	10	820
005	12	10	1000
006	15	10	1300
007	28	05	5100

EXAMPLE

4 1 3 0 - 4 006

- 006 — RESISTOR VALUE CODE
- 4 — LENS COLOR CODE
- 0 — LED TYPE LENS STYLE
- 3 — EMISSION COLOR
- 1 — TERMINATION
- 4 — LED TYPE LENS STYLE

LEDCO DIV. OF WILBRECHT ELECTRONICS (CONT'D)

LIGHT EMITTING DIODE

EMISSION COLOR
- 4 - Red
- 6 - Green
- 7 - Orange

TERMINATION
- 1 - Leads
- 3 - PC board pins
- 5 - Bi-pins

BODY FINISH
- 0 - Bright clear anodized
- 1 - Black anodized

LENS COLOR CODE
- 1 - Amber
- 2 - Red
- 4 - Green
- 5 - Clear

RESISTOR VALUE CODE

Resistor Value Code	Voltage	Current (MA)
001	2	10
002	5	10
003	6	10
004	10	10
005	12	10
006	15	10
007	28	10
008	5	20
009	6	20
010	10	20
011	12	20
012	15	20

EXAMPLE

7 4 3 1 - 2 - 011

- 011 — RESISTOR VALUE CODE
- 2 — LENS COLOR CODE
- 1 — BODY FINISH
- 3 — TERMINATION
- 4 — EMISSION COLOR
- 7 — 7000 SERIES

LEDCO DIV. OF WILBRECHT ELECTRONICS (CONT'D)

DUAL COLOR LIGHT EMITTING DIODES

TERMINATION
- 1 – Leads
- 3 – P.C. board pins
- 5 – Bi-pins

BODY FINISH
- 0 – Bright clear anodized
- 1 – Black anodized

LENS COLOR CODE
- 5 – Clear

RESISTOR VALUE CODE

Resistor Value Code	Voltage	Current (MA)
001	2	10
002	5	10
003	6	10
004	10	10
005	12	10
006	15	10
007	28	10
008	5	20
009	6	20
010	10	20
011	12	20
012	15	20

EXAMPLE

73 5 0 - 5 - 002

- 002 – RESISTOR VALUE CODE
- 5 – LENS COLOR CODE
- 0 – BODY FINISH
- 5 – TERMINATION
- 73 – 7300 SERIES

LEDCO DIV. OF WILBRECHT ELECTRONICS (CONT'D)

LIGHT EMITTING DIODES

EMISSION AND LENS COLOR
- 1 – Amber
- 2 – Red
- 4 – Green

RESISTOR VALUE CODE

PANEL THICKNESS
- A – .125 Inches thick
- B – .187 Inches thick
- C – .220 Inches thick

OPERATING SPECIFICATIONS			
Resistor Value Code	Voltage	Current (mA)	Internal* Resistor (Ohms)
000	2	10	None
330	5	10	330
390	6	10	390
820	10	10	820
1000	12	10	1000
1300	15	10	1300
5100	28	05	5100
2700	28	10	*
150	5	20	150
200	6	20	200
430	10	20	430
510	12	20	510
680	15	20	680

Note: Other resistor values for different current requirements are available on request.

*Externally mounted to one lead due to physical size of resistor.

EXAMPLE

L41 4 2700 - B

- B – PANEL THICKNESS
- 2700 – RESISTOR VALUE CODE
- 4 – EMISSION AND LENS COLOR CODE
- L41 – L41 SERIES

MULLARD, LTD.

DEVICE NUMBERING KEY

DISCRETE DEVICES

MATERIAL USED

The first letter indicates the semiconductor material used:
- A - germanium
- B - silicon
- C - compound materials such as gallium arsenide
- R - compound materials such as cadmium sulphide

FUNCTION

The second letter indicates the general function of the device:
- A - detection diode, high speed diode, mixer diode
- B - variable capacitance diode
- C - transistor for a.f. applications (not power types)
- D - power transistor for a.f. applications
- E - tunnel diode
- F - transistor for r.f. applications (not power types)
- G - multiple of dissimilar devices; miscellaneous devices
- L - power transistor for r.f. applications
- N - photo-coupler
- P - radiation sensitive device such as photodiode, phototransistor, photoconductive cell, or radiation detector diode
- Q - radiation generating device such as light-emitting diode
- R - controlling and switching device (e.g. thyristor) having a specified breakdown characteristic (not power types)
- S - transistor for switching applications (not power types)
- T - controlling and switching power device (e.g. thyristor) having a specified breakdown characteristic
- U - power transistor for switching applications
- X - multiplier diode such as varactor or step recovery diode
- Y - rectifier diode, booster diode, efficiency diode
- Z - voltage reference or voltage regulator diode, transient suppressor diode

SERIAL NUMBER

The remainder of the type number is a serial number indicating a particular design or development and is in one of the following two groups:

(a) Devices intended primarily for use in consumer applications (radio and television receivers, audio amplifiers, tape recorders, domestic appliances, etc.) The serial number consists of three figures.

(b) Devices intended mainly for applications other than (a), e.g. industrial, professional and transmitting equipments. The serial number consists of one letter (Z, Y, X, W, etc.) followed by two figures.

RANGE NUMBERS

Where there is a range of variants of a basic type of rectifier diode, thyristor or voltage regulator diode the type number as defined above is often used to identify the range; further letters and figures are added after a hyphen to identify associated types within the range. These additions are as follows:

Rectifier Diodes and Thyristors

The group of figures indicates the rated repetitive peak reverse voltage, V_{RRM}, or the rated repetitive peak off-state voltage, V_{DRM}, whichever value is lower, in volts for each type.

The final letter R is used to denote a reverse polarity version (stud-anode) where applicable. The normal polarity version (stud cathode) has no special final letter.

Voltage Regulator Diodes, Transient Suppression Diodes

The first letter indicates the nominal percentage tolerance in the operating voltage V_Z.

A - ±1%	D - ±10%
B - ±2%	E - ±20%
C - ±5%	

EXAMPLE

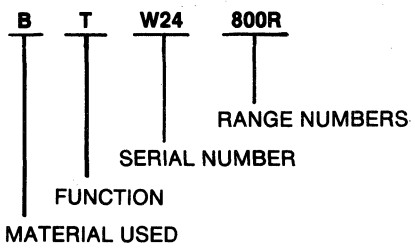

The letter is omitted on transient suppressor diodes.

The group of figures indicates the typical operating voltage V_Z for each type at the nominal operating current I_Z rating of the range. For transient suppressor diodes the figure indicates the maximum recommended standoff voltage V_R.

The letter V is used to denote a decimal sign.

The final letter R is used to denote a reverse polarity version (stud anode) where applicable. The normal polarity version (stud cathode) has no special final letter.

NEC ELECTRONICS U.S.A. INC. NEC

DISCRETE DEVICES

1st term	2nd term	3rd term	4th term	5th term
numeral	character	character	numeral	character
Number of Electrode Elements	Semiconductor Designator		Registration Number	Improvements

EXAMPLE

2 S C 138 A

- 2 — NUMBER OF ELECTRODES
- S — SEMICONDUCTOR DESIGNATOR
- C — FUNCTION
- 138 — NUMBER DETERMINED BY ORDER OF REGISTRATION (THE 138th ELEMENT REGISTERED)
- A — IMPROVEMENTS

NUMBER OF ELECTRODES

1st TERM

0 is used for the numeral of the 1st term, for phototransistors, photodiodes and composite elements including such diodes and transistors. In other elements, when the number of effective electrodes is n, the number n-1 is used for the numeral of the 1st term. That is to say, for a 2 electrode elements such as a diode 1, for a 3 electrode transistor 2, and for a 4 electrode transistor 3 is used. In the case of composite elements, the element with the most numerous electrodes is taken and, similarly to the above, when the number of electrodes of this element is n the numeral of the 1st term shall be n-1.

In the above case, since shield lead wires and 2 or more lead wires coming from the same electrode are not counted as effective electrodes, the number of effective electrodes and the number of lead wires may not necessarily be the same.

SEMICONDUCTOR DESIGNATOR

2nd TERM

S is employed, in order to indicate that the product is a semiconductor.

FUNCTION

3rd TERM

This character is deleted, when the 1st term numeral is 0 or 1.

When the numeral of the 1st term is one or more, in order to make the polarity and outline characteristics of the element known, one of the following characters is used for the 3rd term.

- A - High frequency PNP transistors.
- B - Low frequency PNP transistors.
- C - High frequency NPN transistors.
- D - Low frequency NPN transistors.
- E - Esaki diodes.
- F - Thyristors.
- G - Gunn diodes.
- H - Single junction transistors.
- J - P channel field effect transistors.
- K - N channel field effect transistors.
- M - Bidirectional thyristors.
- Q - Light emitting diodes.
- R - Rectifying diodes.
- S - Small signal diodes.
- T - Avalanche conduction diodes.
- V - Variable capacity diodes, PIN diodes, Snap-off diodes.
- Z - Zener diodes.

However, in the case of diodes some products still remain that have been registered under the old system, in which the 3rd term character is deleted and the type name is in the form of 1SOO.

REGISTRATION NUMBER

4th TERM

A number which is attached in accordance with the order of registration, that starts at 11.

IMPROVEMENT

5th TERM

This character indicates improvements from the original form. This character is not attached to the original form, but is attached to improved models employing the capital letters, A, B, C, D, E, F, G, H, J, K of the alphabet in the order of the improvements. In the case improvements are made, the improved model shall be compatible with the preceding model, though compatibility in the opposite direction is not necessarily required.

In the case of diodes, when the letter M is used for the 5th term it indicates that the element is a matching couple, and when R is used that the polarity is reversed while the exterior and electrical characteristics are the same.

In addition to the above, with no bearing on the JIS nomenclature, a character or number in ( ) is sometimes used as a 6th term to indicate that the specification is that of a specific customer.

- N - NHK standard type (example: 2SC594 N)
- M - Defense Agency Maritime General Staff approved (example: 2SC68-M)
- S - One of the several S series types established for industrial measurement (example 2SD188 S)
- (numerals)...Established for specific customers or applications. Attached sequentially from (1) in order of establishment. (example: 2SC653(1), 1S306(3))

NEC ELECTRONICS U.S.A. INC. (CONT'D)

DISCRETE DEVICES

NEC'S ORIGINAL NOMENCLATURE.

Some diodes and optical semiconductor elements employ a nomenclature original to NEC. This nomenclature consists of a prefix of 2 or 3 alphabet characters followed by a numeral and character. As shown in the table, the prefix indicates the use and structure of the element.

NEC Nomenclature

Prefix	Use & Structure	Product example
AD	Impatt diode	AD611
GD	Gunn diode	GD408A
GH	Germanium mixer diode	GH1D
PH	Phototransistor	PH201A
PS	Photocoupler, photointerrupter	PS2001
RD	Zener diode	RD2.OE
SD	Small signal diode	SD13
SE	Infrared light emitting diode	SE301A
SG	Green light emitting diode	SG203D
SH	Point contact type silicon diode	SH5A
SM	Schotty barrier type GaAs mixer diode	SM153
SR	Red light emitting diode	SR103D
SY	Amber color light emitting diode	SY403D
SV	Silicon varactor diode	SV87D

EXAMPLE

AD — PREFIX

611 — DEVICE NUMBER

OPTREX CORP.

LIQUID CRYSTAL DISPLAYS

MODE
- F - FEM (Field Effective Mode)
- G - Guest Host Mode

VIEWING MODE
- R - Reflective
- S - Transflective (Semi-Transmissive)
- T - Transmissive

OPERATING METHOD
- D - DYNAMIC (MULTIPLEX)
- S - STATIC

APPLICATION
- 0 - for Calculator
- 1 - for Instrument
- 2 - for Watch
- 4 - for Clock
- 5 - for Camera
- 6 - for Audio, TV
- 7 - Dot Matrix
- 9 - for Others

DEVICE NUMBER
- Successive Number or a Drawing

CONNECTOR
- NO DESIGNATOR - Rubber Connector
- P - Pin Connector
- F - Flexible Connector

GRADE
- NO DESIGNATOR - Consumer
- H - High Reliability (Extended Temperature)

POLARIZER
- NO DESIGNATOR - Pasted (Both)
- PQ - Separated (Both)
- P - Separated (Front)
- Q - Separated (Rear)

COLOR OF POLARIZER
- C - Clear
- B - Blue
- G - Green
- R - Red

VIEW ANGLE
- U - from Up-Side (12:00, 1:30, 10:30)
- D - from Down-side (6:00, 4:30, 7:30)
- L - from Left-Side (9:00)
- R - from Right-Side (3:00)

EXAMPLE:

F R S - 1 111 P H P C D

- F — MODE
- R — VIEWING MODE
- S — OPERATING METHOD
- 1 — APPLICATION
- 111 — DEVICE NUMBER
- P — CONNECTOR
- H — GRADE
- P — POLARIZER
- C — COLOR OF POLARIZER
- D — VIEW ANGLE

OPTREX CORP. (CONT'D)

LCD CLOCK MODULES

FREQUENCY OF CRYSTAL
- L – 32.768KHz
- H – 4.194MHz

HOURS FORMAT
- 1 – 12 Hours Format
- 2 – 24 Hours Format

TIMER
- X – Open
- Q – 16 Minutes
- H – 32 Minutes
- F – 64 Minutes
- W – 128 Minutes

LAMP VOLTAGE
- 1 – 1.5V
- 3 – 3V
- 6 – 6V

COLOR OF POLARIZER
- C – Clear
- B – Blue
- G – Green
- R – Red

VIEW ANGLE
- U – from Up-Side
- D – from Down-Side
- R – Rectangular

QUANTITY OF LAMP
- 0 – without Lamp
- 1 – with 1 Lamp
- 2 – with 2 Lamps

EXAMPLE:

CM 729 L 2 X I C U 2

- 2 – QUANTITY OF LAMP
- U – VIEW ANGLE
- C – COLOR OF POLARIZER
- I – LAMP VOLTAGE
- X – TIMER
- 2 – HOURS FORMAT
- L – FREQUENCY OF CRYSTAL
- 729 – DEVICE NUMBER
- CM – CLASSIFIED CODE

OPTO TECHNOLOGY, INC.

OPTO-ISOLATORS

SERIES
- 4 – 40 Series
- 8 – 80 Series

PACKAGE
- 1
- 2

OUTPUT
- L – LSTTL Output
- C – Open Collector Output

LOGIC
- P – Logic Level High (No Interruption)
- N – Logic Level Low (No Interruption)

EXAMPLE

OTS - 4 1 C N

- N – LOGIC
- C – OUTPUT
- 1 – PACKAGE
- 4 – SERIES
- OTS – OP-TEC PREFIX

REFAC ELECTRONICS CORP.

LCD DISPLAYS

DISPLAY TYPE
- BG – Bargraph
- 65 – Instrument
- 85 – Dot Matrix Single-Line
- 95 – Dot Matrix Multi-Line

CHARACTER HEIGHT
- 050 – ½"
- 075 – ¾"
- 100 – 1"

NUMBER OF CHARACTER/DIGITS
- 4 – 4 Digits
- 4H – 4½ Digits
- 4HL – 4½ Digits With "Lo Bat" Annuciator

POLARIZER
- F – Transflective
- R – Reflective
- T – Transmissive

CONNECTORS
- D – Clip-on Pins (single edge)
- K – Clip-on Pins (double edge)
- E – Epoxy Pins
- P – Designed for Clip-
- Z – Designed for Elastomeric

FLUID
- A – Standard
- C – High Temperature
- D – Duplex to Triplex
- M – Multiplex
- Q – Quadruplex

*Note: High Humidity Polarizers available. Consult factory.

EXAMPLE:

65 050-4H R-D A-X-0000

- 0000 – CUSTOM DISPLAY
- X – FLUID
- D – CONNECTORS
- R – POLARIZER*
- 4H – NUMBER OF CHARACTER/DIGITS
- 050 – CHARACTER HEIGHT
- 65 – DISPLAY TYPE

SIEMENS AKTIENGESELLSCHAFT

LIGHT EMITTING DIODES

PRODUCT
- L – Light emitting diode

WAVELENGTH
- B – 480nm sic blue
- G – 560 to 570nm green
- Y – 585 to 595nm yellow
- S – 620 to 640nm super red
- R – 645 to 665nm Ga Asp red
- U – 635 and 560nm super/red-green

TYPE
- 3 – 3mm
- 5 – 5mm
- B – 2.5 x 5mm
- H – 4 x 5mm
- S – SOT-23 case
- U – 1mm array version
- Z – 2mm array version

LENGTH OF LEADS
- 1 – <20mm with stand-off
- 2 – <20mm without stand-off
- 3 – <30mm with stand-off
- 4 – <30mm without stand-off

CASE		Viewing angle (typ.)
1 – colorless	clear	15.....30 degrees
2 – colored	clear	15.....30 degrees
3 – colorless	clear	30.....70 degrees
4 – colored	clear	30.....70 degrees
5 – colorless	diffused	40.....80 degrees
6 – colored	diffused	40.....80 degrees
7 – colorless	diffused	>80 degrees
8 – colored	diffused	>80 degrees

(SOT 23 requires no angle)

SPECIAL VERSION
- 0 to 8 – can be individually determined for each type
- 9 – LED with low-current chip

For array versions (digit 4=Z)
Number of lamps per array

LUMINOUS INTENSITY
(I_F=10mA)

A –	0.1	to	0.2	mod
B –	0.16	to	0.32	mod
C –	0.25	to	0.50	mod
D –	0.40	to	0.80	mod
E –	0.63	to	1.25	mod
F –	1	to	2	mod
G –	1.6	to	3.2	mod
H –	2.5	to	5	mod
J –	4	to	8	mod
K –	6.3	to	12.5	mod
L –	10	to	20	mod
M –	16	to	32	mod
N –	25	to	50	mod
P –	40	to	80	mod
Q –	63	to	125	mod
R –	100	to	200	mod
S –	160	to	320	mod
T –	250	to	500	mod
U –	400	to	800	mod
V –	630	to	1250	mod
W –	1000	to	2000	mod
Y –	2500	to	5000	mod
Z –	>5000			mod

O – open top
(For blue LED: I_F=20mA)
One letter=Single group
Two letters=Family group

EXAMPLE

L R 3 1 6 0 – FH

- L – PRODUCT
- R – WAVELENGTH
- 3 – TYPE
- 1 – LENGTH OF LEADS
- 6 – CASE
- 0 – SPECIAL VERSION
- FH – LUMINOUS INTENSITY

VARITRONIX LTD.

DEVICE NUMBERING KEY

LCD DISPLAYS

APPLICATION
- No Designator – Watch
- L – Clock
- C – Calculator
- I – Instrument
- D – Dot Matrix
- G – Graphic

DRIVE
- No Designator – Static
- M – Multiplex

CONNECTOR
- 1 – Pin type (Pins not Supplied)
- 2 – Elastomeric (Zebra) type
- KB – Clip-on-connector Provided
- DP – Epoxy DIL pins Provided

POLARIZER GRADE
- RC – Standard Reflective
- FC – Standard Transflective
- TC – Standard Transmissive
- GC – Standard Gold Reflective
- RH – Reflective, high humidity
- FH – Transflective, high humidity
- TH – Transmissive, high humidity

FLUID
- S – Standard
- W – Wide temperature*

DRIVE VOLTAGE*
- LV – 3.1V
- HV – 4.5V

MODE
- No Designator – Positive
- N – Negative

*NOTE: Wide temperature fluid requires higher voltage of drive, consult manufacturer for details

EXAMPLE

V I M – 808 – I – RC – S – LV – N

- V – VARITRONIC PREFIX
- I – APPLICATION
- M – DRIVE
- 808 – DEVICE NUMBER
- I – CONNECTOR
- RC – POLARIZER/GRADE
- S – FLUID
- LV – DRIVE VOLTAGE
- N – MODE

MANUFACTURERS' LOGOS

51. MANUFACTURERS' LOGOS

ALGG – Telefunken Electronic

AND – And Inc.

ANS – Analog Systems

AOI – Antel Optronics, Inc.

APX – Amperex Electronics Corp.

ASE – Applied Solar Energy Corp.

BAR – Barnes Engineering Co.

BEC – Babcock Display Products, Inc.

CENB – Centronic Inc.

CHE – Cherry Semiconductor Corp.

CLA – Clairex Electronics

CRS – Crystaloid Electronics Co.

51. MANUFACTURERS' LOGOS

DECO – Digital Electronics Corp.

DIA – Dialight Corp.

DMC – DYMEC

DPI – Displays Inc.

DTL – G.E. Datel

EEVB – The Electric Valve Co., Ltd.

EGG – EG&G Photon Devices

EII – Eltec Instruments Inc.

FACC – Ford Aerospace & Communications Corp.

FERB – Ferranti Electronics Ltd.

FMI – Fujitsu Microelectronics

FSC – Fairchild Camera & Instrument Corp.

51. MANUFACTURERS' LOGOS

GESY – General Electric Co.

GIC – General Instrument Corp.

HAFO – HAFO AB

HAM – Hamlin Inc.

HITJ – Hitachi Ltd.

HON – Honeywell Optoelectronics Inc.

HPA – Hewlett Packard

HPKJ – Hamamatsu Photonics K.K.

IMTM – Industria Mexicana Toshiba S.A.

INR – International Rectifier Corp.
INRI – International Rectifier Corp.-Italy

IPI – Integrated Photomatrix Inc.

IRI – Infrared Industries Inc.

51. MANUFACTURERS' LOGOS

KCC – Kinematics & Control Corp.

KODC – Kodenshi Corp.

LAD – Laser Diode Laboratories Inc.

LCF – Lecroy Research Systems Corp.

LEE – Leecraft Mfg. Co., Inc.

LTN – Lite-On Corp.

MAI – Math Associates Inc.

MATJ – Matsushita Electronics Corp.

MDC – Microwave Diode Corp.

MEHK – Micro Electronics Ltd.

MER – Meret Inc.

MITA – Mitsubishi Electronics America, Inc.
MITJ – Mitsubishi Electric Co.

51. MANUFACTURERS' LOGOS

MOL – Molectron Corp.

MOTA – Motorola Semiconductor Products

MPI – Micropac Industries, Inc.

MPS – Micro Power Systems

MULB – Mullard Ltd.

NAT – National Electronics, Inc.

NECJ – Nippon Electric Co.
NECE – NEC Electronics USA, Inc.

NEI Noritake Electronics, Inc.

NSC – National Semiconductor Corp.

OKIJ – Origin Electric Co., Ltd.

OPE – Optoelectronics Inc.

OTI – Opto Technology, Inc.

51. MANUFACTURERS' LOGOS

OTK – Optek

PCI – PCI Inc.

PHIN – Philips Elect.
Comp. & Materials Div.

PLOB – Plessey Optoelectronics
& Microwave

QTC – Quantrad Corporation

RCA – RCA Corp.

REA – Readouts Inc.

REC – Refac Electronics Corp.

RET – EG&G Reticon

RHM – Rohm Corp.

RKW – Rockwell Int'l Corp.

RSCB – R.S. Components Ltd.

51. MANUFACTURERS' LOGOS

RTCF – RTC-Compelec

RTN – Raytheon Company

SAI – Sanders Associates Inc.

SAKJ – Sanken Electric Co.

SAM – Skan-a-Matic Corp.

SBR – Santa Barbara Research Center

SCA – Semicoa

SIEG – Siemens Aktiengesellschaft
SIEX – Siemens – Optoelectronics Div.

SIX – Siliconix Inc.

SOL – Silicon Sensors

SONY – Sony Corp.

SPR – Sprague Electric Co.

51. MANUFACTURERS' LOGOS

SRPJ – Sharp Corporation

STAJ – Stanley Electric Co., Ltd.

STCE – Stantel Components

STE – Sensor Technology Inc.

STC – Silicon Transistor Corp.

SXI – Silonex Inc.

TCY – Teledyne Crystalonics

TII – Texas Instruments

TOI – Texas Optoelectronics, Inc.

TOSJ – Toshiba Corp.

TRW – TRW LSI Products
TRWO – TRW Optron

UCE – UCE Inc.

51. MANUFACTURERS' LOGOS

UDT – United Detector Technology Inc.

VACTEC, INC.

VAC – Vactec

VALVO

VALG – Valvo GmbH

52. MANUFACTURERS' CODES, NAMES & ADDRESSES

(MANUFACTURERS IN ORDER OF D.A.T.A. CODE LETTERS)

QPL MFR. DESIGN.	FSCM/ NATO No.	D.A.T.A. MFRS.' CODE	
	D1597	**ALGG**	* Telefunken Electronic, Semiconductor, Theresienstrasse 2, Heilbronn D-7100, West Germany
		AND	AND, Inc., 770 Airport Blvd., Burlingame, CA 94010
		ANS	Analog Systems, P.O. Box 35879, Tucson, AZ 85740
		AOI	Antel Optronics, Inc., 3329 Mainway, Burlington, Ontario, Canada L7M 1A8
CEP	25403	**APX**	Amperex Electronics Co., Slatersville Div., George Washington Hwy., Slatersville, RI 02876
	11536	**ASE**	Applied Solar Energy Corp., 15251 E. Don Julian Rd., P.O. Box 1212, City of Industry, CA 91746
	00430	**BAR**	Barnes Engineering Co., 44 Commerce Rd., Stamford, CT 06904
	52536	**BEC**	Babcock Display Products, 1051 So. East St., Anaheim, CA 92805
		CENB	* Centronic Electro-Optics, Inc., 1829 "B" DeHavilland Drive, Newbury Park, CA 91320
		CHE	Cherry Semiconductor Corp., 2000 South County Trail, E. Greenwich, R.I. 02818-0031
	71744	**CHM**	General Instrument Lamp Division, 4433 No. Ravenswoods Ave., Chicago, IL 60640
	03911	**CLA**	* Clairex Electronics, 560 So. Third Ave., Mt. Vernon, NY 10550
	33163	**CPD**	Devar Inc., 706 Bostwick Ave., Bridgeport, CT 06605
		CRS	Crystaloid Electronics Co., 5282 Hudson Dr., Hudson, OH 44236
		DECO	Digital Electronics Corp., 26142 Eden Landing Rd, Suite 2, Haywood, CA 94545
	72619	**DIA**	Dialight Corp., 203 Harrison Pl., Brooklyn, NY 11237
	17191	**DMC**	DYMEC, 8 Lowell Ave., Winchester, MA 01890
		DPI	Displays Inc., RD 4 Box 6AAA, Lewistown, PA 17044
	50721	**DTL**	G.E. Datel, 11 Cabot Blvd., Mansfield Industrial Park, Mansfield, MA 02048
	K0442	**EEVB**	The English Electric Valve Co., Ltd., Waterhouse Lane, Chelmsford, Essex, England
	25506	**EGG**	E G & G/Photon Devices, 35 Congress St., Salem, MA 01970
		EII	Eltec Instruments Inc., P.O. Box 9610, Central Business Park, Daytona Beach, FL 32020
	09205	**FACC**	Ford Aerospace & Communications Corp., Ford Rd., Newport Beach, CA 92660
	K1196	**FERB**	Ferranti Electronics Ltd., Fields New Rd., Chadderton, Oldham OL9 8NP, England
		FMI	Fujitsu Microelectronics, Inc., 3320 Scott Blvd., Santa Clara, CA 95054-3197
CFJ	07263	**FSC**	Fairchild Semiconductor, 450 National Ave., Mountain View, CA 94042
CG	03508	**GESY**	General Electric Semiconductor Co., Electronics Park Bldg. 7, Syracuse, NY 13221
CAKK	14936	**GIC**	General Instrument, Corp., 600 W. John St., Hicksville, NY 11802
		HAFO	* ASEA-HAFO AB, Bruttovagen Box 520, Jarfalla, Sweden S17526
	12617	**HAM**	Hamlin, Inc., 612 E. Lake St., Lake Mills, WI 53551
	50521	**HEI**	HEI, Inc., 1495 Steiger Lake Ln., Victoria, MN 55386
	S4361	**HITJ**	Hitachi Limited, 2210 O'Toole Ave., San Jose, CA 95131
	32388	**HON**	Honeywell Inc., 830 East Arapaho Rd., Richardson, TX 75081
CAQI	50434	**HPA**	Hewlett Packard, 3000 Hanover St., Palo Alto, CA 94304
		HPKJ	Hamamatsu Photonics, 325-6, Sunayama-cho, Hamamatsu City, Japan 430
		IMTM	Industria Mexicana Toshiba S.A., Calzada de Guadalupe, 303 Cuautitlan, Edo de Mexico, Mexico
	A2849	**INRI**	International Rectifier Corp., Italiano S.p.A., Via Privata Liguria 49, 10070 Borgaro, Torinese, Italy
		IPI	Integrated Photomatrix, Inc., 1101 Bristol Rd., Mountainside, NJ 07092
		IRI	Infrared Industries, Inc., 12151 Research Parkway, Orlando, FL 32857
		KCC	Kinematics & Control Corp., 14 Burt Drive, Deer Park, NY 11729
		KODC	Kodenshi Corp., 24-52 Makishima-Cho UJ1-SHI, Kyoto-Fu, 611, Japan

★ New manufacturers added since last edition

* See separate sales office listings for additional locations

(continued)

52. MANUFACTURERS' CODES, NAMES & ADDRESSES

(MANUFACTURERS IN ORDER OF D.A.T.A. CODE LETTERS)

QPL MFR. DESIGN.	FSCM/ NATO No.	D.A.T.A. MFRS.' CODE	
		LAD	Laser Diode, Inc., 1130 Somerset St., New Brunswick, NJ 08901
		LCF	LeCroy Research Systems Corp., 700 S. Main St., Spring Valley, NY 10977
		LEE	Leecraft Manufacturing Co., Inc., 21-04 44th Rd., Long Island City, NY 11101
		LTN	Lite-On Corp., 4951 Airport Pkwy., Suite 570, Dallas, TX 75248
		LWE	LEDCO Div. of Wilbrecht Electronics, 240 E. Plato Blvd., St. Paul, MN 55107
		LXD	Liquid Xtal Display, Inc., 24500 Highpoint Road, Beechwood, OH 44122
		MAI	Math Associates, 2200 Shames Dr., Westbury, NY 11590
	01619	**MATJ**	Matsushita Electronics Corp., 1 Kotari Yakemachi, Nagaokakyo, Kyoto 617, Japan
		MDC	Microwave Diode Corp., Washington Str. US Route 3, P.O. Box 250, W. Stewartstown, NH 03597 FSCM - 55557
	S4140	**MEHK**	Micro Electronics Ltd., 38 Hung To Rd., Kwun Tong, Hong Kong
	53071	**MER**	Meret Inc., 1815 24th St., Santa Monica, CA 90404
	55621	**MII**	Micon Industries, 8 Blanchard Road, Burlington, MA 01803
		MITA	Mitsubishi Electronics America, Inc., 1050 East Argues Avenue, Sunnyvale, CA 94086
	90144	**MITJ**	Mitsubishi Electric Corp., Kita-Itami Works, 4-1 Mizuhara, Itami Shi, Hyogo-ken, Japan 664 FSCM - 90144
		MKT	Marltech International Corp., 5 Northway Lane North, Latham, NY 12110
		MOL	Cooper Laser Sonics, 3420 Central Expressway, Santa Clara, CA 95051
CGG	04713	**MOTA**	Motorola Semiconductor Products, Inc., 3501 Ed Bluestein Blvd., Austin, TX 78721
		MPI	Micropac Industries, Inc., P.O. Box 469017, Garland TX 75046
CEJG	31757	**MPS**	Micro Power Systems, 3100 Alfred Street, Santa Clara, CA 95054 FSCM - 54186
CCWV	K8996	**MULB**	Mullard Limited, New Road, Mitcham, Surrey, England
		NAT	National Electronics, Inc., P.O. Box 424, Franklin Park, IL 60131
		NECE	NEC Electronics USA, Inc., 401 Ellis St., Mountain View, CA 94039-7241
	S4237	**NECJ**	Nippon Electric Co., Ltd., 3-484 Tsukagoshi Saiwai-ku, Kawasaki City, Managawa, Japan 210
		NEI	Noritake Electronics, Inc., 425 East Golf Road, Suite 109, Arlington Heights, IL 60005
CCXP	27014	**NSC**	National Semiconductor Corp., 2900 Semiconductor Drive, P.O. Box 58090, Santa Clara, CA 95052-8090 FSCM - 27014 QPL - CCXP
		OAK	Oak Switch Systems, Inc., P.O. Box 517, Crystal Lake, IL 60014
		OKIJ	OKI Semiconductor, 650 N. Mary Ave., Sunnyvale, CA 94086
		OKIJ	OKI Electric Industry Co. Ltd., 4-10-3 Shibaura, Minato-ku, Tokyo, 108 Japan
	50347	**OPCJ**	Optrex Corp., Yushima Bldg. 3-14-9, Yushima Bunkyo-ko, Tokyo 113 Japan
	54243	**OPE**	Optoelectronics, Inc., P.O. Box 2010, Petaluma, CA 94953
		OTI	Opto Technology, Inc., 562 Chaddick Drive, Wheeling, IL 60090
		OTK	Optek, Div. of Crown Semiconductors, Inc., 345 Industrial Blvd., McKinney, TX 75069
		PCI	PCI Inc., 2455 Augustine Dr., Santa Clara, CA 95052
CDGW	H0002	**PHIN**	Philips Electronic Components & Material Div., Elcoma Comm. Dept., Eindhoven, Netherlands
	K8747	**PLOB**	Plessey Optoelectronics & Microwave, Wood Burcote Way, Towcester, Northamptonshire, U.K.
		QTC	Quantrad Corporation, 19900 So. Normandie Ave., Torrance, CA 90502
CRC	18714	**RCA**	RCA, Solid State Division, Route 202, Somerville, NJ 08876
	52923	**REA**	Readouts, Inc., P.O. Box 149, Del Mar, CA 92014
	28564	**REC**	Refac Electronics Corp., West Hill Road, Winsted, CT 06098

★ New manufacturers added since last edition

* See separate sales office listings for additional locations

(continued)

52. MANUFACTURERS' CODES, NAMES & ADDRESSES

(MANUFACTURERS IN ORDER OF D.A.T.A. CODE LETTERS)

QPL MFR. DESIGN.	FSCM/ NATO No.	D.A.T.A. MFRS.' CODE	
	56025	**RET**	EG&G Reticon, 345 Portero Avenue, Sunnyvale, CA 94086 FSCM - 56025
		RHM	Rohm Corp., P.O. Box 19515, Irvine, CA 92713
	94756	**RKW**	Rockwell Int'l Elec. Devices Div., 4311 Jamboree Rd., Newport Beach, CA 92660
		RSCB	★ R.S. Components Ltd., P.O. Box 99, Corby, Northants, England N179RS
	F0862	**RTCF**	RTC-Compelec, 130 Avenue Ledru-Rollin, 75540 Paris Cedex 11, France
CRP	07933	**RTN**	Raytheon Company, 350 Ellis St., Mountain View, CA 94043
		SAI	Sanders Associates, Inc., 95 Canal St., Nashua, NH 03061
	S3385	**SAKJ**	Sanken Electric Co. Ltd., 1-22-8 Nishi Ikebukuro, Toshima - kw, Tokyo, Japan
	51522	**SAM**	Skan-A-Matic Corp., P.O. Box S, Route 5 West, Elbridge, NY 13060
	11328	**SBR**	Santa Barbara Research Center, 75 Coromar Dr., Goleta, CA 93117
CEJJ	34156	**SCA**	Semicoa, 333 McCormick Ave., Costa Mesa, CA 94303
		SDC	Silicon Detector Corp., 855 Lawrence Dr., Newbury Park, CA 91320
		SHL	Shelly Associates, 14281 Chambers Rd., Tustin, CA 92680
	D1180	**SIEG**	* Siemens Aktiengesellschaft, Balanstr 73, D-8000, Munchen 80, West Germany FSCM - D1180
		SIEX	Siemens - Optoelectronics Div., 19000 Homestead Rd., Cupertino, CA 95014
		SIX	* Siliconix, Inc., 2201 Laurelwood Rd., Santa Clara, CA 95054
	54822	**SOL**	Silicon Sensors, Inc., Highway 18 East, Dodgeville, WI 53533
	S0482	**SONY**	Sony Corp., Semiconductor Business Div., Component Marketing, 10-18 Takanawa 4-chome, Minato-ku, Tokyo 108 Japan
CERK	56289	**SPR**	Sprague Electric Co., 115 Northeast Cutoff, Worcester, MA 01606
	S4117	**SRPJ**	Sharp Corp., 2613-1 Ichinomoyo, Tenri-City Nara, Japan
		STAJ	Stanley Electric Co., Ltd., 2-9-13 Nakameguro, Meguro-Ku, Tokyo, Japan
	42951	**STCE**	Stantel Components, Brixham Rd., Paignton, Devon TQ4 7BE, England
	29927	**STE**	Sensor Technology, Inc., 21012 Lassen St., Chatsworth, CA 91311
		SXI	Silonex Inc., 331 Cornelia St., Plattsburgh, NY 12901
CCZK	12498	**TCY**	Teledyne Crystalonics, 147 Sherman St., Cambridge, MA 02140
		TFS	III-V Semiconductors, Inc., 4545 South Wentler Dr., Tempe, AZ 85282
CGO	01295	**TII**	Texas Instruments Inc., Literature Response Center, P.O. Box 401560, Dallas, TX 75240
		TOI	★ Texas Optoelectronics, Inc., 714 Shepherd Drive, Garland, TX 75042
		TOSA	★ Toshiba America, Inc., 2692 Dow Avenue, Tustin, CA 92680
	S0557	**TOSJ**	Toshiba Corp., c/o Microelectronics, Center 1 Komukai Toshiba s/o Sai, Kawasaki 210, Japan
		TPN	★ Teledyne Philbrick, Allied Drive at Route 128, Dedham, MA 02026 FSCM - 29832
		TRW	★ TRW LSI Products, P.O. Box 2472, La Jolla, CA 92038 FSCM - 59621
CDTF	32694	**TRWO**	TRW Optron, 1416 Upfield Dr., Carrollton, TX 75006
		TSEJ	Tottori Sanyo Electric Co., Inc., 5-318 Tachikawa-cho, Tottori City, Japan 680
		UCE	Uce, Inc., 24 Fitch St., Norwalk, CT 06855
	50486	**UDT**	United Detector Technology, 12525 Chadron Ave., Hawthorne, CA 90250
		USSR	V/O Electronzagranpostavka, 24/2 UL Usievicha, Moscow 125315, U.S.S.R.
		VAC	* E G & G Vactec, Inc., 10900 Page Blvd., St. Louis, MO 63132
	D2540	**VALG**	Valvo GmbH, P.O. Box 106323, D2000 Hamburg 1, West Germany

★ New manufacturers added since last edition

* See separate sales office listings for additional locations

INTERPRETER SECTION

SYMBOLS & CODES COMMON TO MORE THAN ONE SECTION

LINE NO.

▼ – New Type
♦ – Revised Specifications

COLOR CODE

1 – Infrared
2 – Red
3 – Orange, amber
4 – Yellow
5 – Green
6 – Blue
7 – Violet
9 – Silver
10 – White
11 – Black
12 – Gold

Multi-Color devices are coded by combining single- color codes.
Example:
25 – Red-Green
24 – Red-Yellow
23 – Red-Orange

TYPE NUMBER

(1) (2) (3) Used when more than one manufacturer assign the same type number to different devices, or when two or more like devices are listed with different test parameters.

(A) This information was derived from an advanced-release data sheet. Working components may have not yet reached production.

SCHEMATIC

♦ – Terminal designation indicated in outline drawing
– Device contains more than one channel (photocouplers only)

DRAWING

‡ – Available in multiple packaging
⌀ – RND
□ – RECT
△ – STRIP
* – Chip

SOURCE CODE

A – GaAs
B – Tungsten (Temp not specified)
C – Tungsten (2850 to 2860K)
D – Tungsten (2780K)
E – Tungsten (2870K to 2880K)
F – Tungsten (2800K)
G – Tungsten (2700K)
H – Tungsten (2840K)
J – Tungsten (1700K)
K – Black-body (295K)
L – Black-body (500K)
S – Solar source at earth's surface

LEAD CODE

Code found at the beginning of the schematic drawings.

LEAD CODE EXPANDER

☑ – Terminal 1 connected to Case
§ – Terminal 2 connected to Case
ϕ – Terminal 3 connected to Case
$ – Terminal 4 connected to Case
♦ – See Outline for terminal designation

ABBREV.	TERM
A,A1,A2	Anode
B,B1,B2	Base
C,C1,C2	Collector
D	Drain
E,E1,E2	Emitter
G	Gate
GN	N-Gate (Anode Gate)
GP	P-Gate (Cathode Gate)
K,K1,K2	Cathode

ABBREV.	TERM
NC	No Connection
R	Guard Ring
S	Source
(+)	Positive Source Terminal
(–)	Negative Source Terminal

NOTE: For multi-element devices, numerical subscripts designate corresponding element terminals.

LEAD CODE	LEAD CONFIGURATION 1	2	3	4
A	A	K		
B	K	A		
C		K	A	
D	K2	K1	A1/A2	
E	K	NC	A	
F	A	NC	K	
G	K	R	A	
H	A	K	R	
J		A	K	
K	K	A	NC	
M	A	A	K	
N	A1	A2	K1/K2	
S	A		K	CASE
T	K	A	R	
U	(–)	NC	(+)	
V	A		K	
W	A	R	K	
X	A	CASE	K	
Y	K		A	
Z	A	K	CASE	
AA	C	E		
AB	E	C		
AC	E	C	B	
AD	E	B	C	
AE	B	E	C	
AF	B	C	E	
AG	C	E	B	
AH	C	B	E	
AJ	E		C	
AK	E	C		
AM	C		E	
AN	NC	K	A	
AQ	A	K	A	
AR	K	K	Common A	
AS	A1	K	K	

LEAD CODE	LEAD CONFIGURATION 1	2	3	4
DA	C1/C2	E2		
DB	E2	C1/C2		
DC	B1	E2	C1/C2	
DD	B1	C1/C2	E2	
DE	C1/C2	B1	E2	
DF	C1/C2	E2	B1	
DG	E2	B1	C1/C2	
DH	E2	C1/C2	B1	
EJ	B1	C1/C2	E1/B2	E2
EK	B1	C1/C2	E2	E1/B2
EM	C	G	A	
EN	E2/B3	E3	C1/C2/C3	
EQ	C	B	E1	E2
ER	C1	C2	E2	
ES	C1/C2		E2	
GA	S	D		
GB	D	S		
GC	D	G	S	
GD	D	S	G	
GE	G	D	S	
GF	G	S	D	
GG	S	D	G	
GH	S	G	D	
GJ	S	D	G	CASE
KA	A	K		
KB	K	A		
KC	A	K	G	
KD	A	G	K	
KE	K	GP	A	GN
KF	G	A	K	
KG	K	G	A	
KH	K	GP	A	GN
KJ	K	GP	GN	A
KK	D	S	CASE	

Continued on next page

SYMBOLS & CODES COMMON TO MORE THAN ONE SECTION (CONT'D)

OPERATING TEMPERATURE RANGE CODE

CODE	TEMP RANGE (°C)
0	0 to 9
1	10 to 19
2	20 to 29
3	30 to 39
4	40 to 49
5	50 to 59
6	60 to 69
7	70 to 79
8	80 to 89
9	90 to 99
A	100 to 109
B	110 to 119
C	120 to 129
D	130 to 139
E	140 to 149
F	150 to 159
G	160 to 169
H	170 to 179
J	180 to 189
K	190 to 199
M	200 to 209
N	210 to 219
P	220 to 229
R	230 to 239
S	240 to 249
T	250 to 259
X	Not Specified

SYMBOLS

- ⌀ – Base or stud
- □ – Case
- § – Junction
- % – Storage
- $ – Both values of temp are positive
- ♦ – One specified operating temp

EXAMPLES

5 C

Min value lies between −50°C and −59°C

Max value lies between 120°C and 129°C

1 8 $

Min value lies Between +10°C and +19°C (pos. because of symbol)

Max value lies between 80°C and 90°C

K X ♦

Specified operating point lies between −190°C and −199°C

FEATURES

AC	For AC Operation
Cyl	Cylindrical Shape
FO	Fiber Optic
Flat	Flat or Thin Shape
Flsh	Flashing or Blinking
Hsg	With Housing or Enclosure
Lug	Mounting Lug
Match	Matched Emitter/ Sensor or Matching Factor
Mini	Miniature
Opsw	Optical Switch
RYG	Red, Yellow, and Green Available
Rect	Rectangular
Res	Series/Current Limiting Resistor
Side	Side Looking Active Area
Spot	Narrow Beam Angle (less than 5 degrees)
Stkbl	Stackable devices
Tri	Triangular Shape
Wire	Wire Leads
w/Logic	Internal Logic Circuitry

MATERIAL CODE

Code	Mat	Code	Mat	Code	Mat
AA	Cd	BK	GeHg	CJ	InGaAs
AB	Ge	BM	GeCu	CK	Calcium Fluoride
AC	Se	BN	GeCd	DA	CdSe: CdS
AD	Si	BP	GeZn	DB	GaAsP: N
AE	Tu	BQ	SiAs	DC	GaP: ZnO
AF	P	BR	SiGa	EA	GaAsP: GaAs
BA	CdS	BS	PbSe	EB	GaAsP: GaP
BB	CdSe	CA	GaAsP	EC	GaAs: Al
BC	GaAs	CB	GaAs: Si	ED	LiTaO
BD	GaP	CC	GaAs: Zn	EE	TSN
BE	GaSb	CD	GaP N	EF	In Ga AsP
BF	InAs	CE	GaAlAs	EG	SiC; AN,N
BG	InSb	CF	CdSSe	EH	GaAs:GaAlAs
BH	PbS	CG	HgCdTe	EJ	AlGaAs
BI	SiC	CH	Lead Tin Telluride	XX	Not specified by mfr.
BJ	GeAu	CI	Caesium Iodide		

SECTION 2 — LED LAMPS — SECTION 2

INCLUDES: LEDS in the following colors:
- Red
- Orange/Amber
- Yellow
- Green
- Blue
- Bicolor Red-Green
- Bicolor Red-Yellow
- Bicolor Red-Orange
- Bicolor Orange-Green
- Bicolor Yellow-Green
- Tricolor Red-Yellow-Green
- Quadcolor Red-Orange-Yellow-Green

TYPE NUMBER The manufacturer designated part number.

LUMINOUS INTENSITY I_V The ratio of luminous flux of a source to the solid angle subtended by the detected area and that source. (A spatial flux density measure in LUMENS/STERADIAN = 1 CANDELA.)

I_F TEST The forward current at which the luminous intensity and beam angle are specified.

BEAM ANGLE θ HI The full cone angle of an optical axis within which the radiant intensity is not less than 50% of the maximum intensity.

LENS TYPE The dispersive characteristic of the lens, e.g. diffuse, water-clear, milk-white, etc.

LAMP STYLE The generic lamp silhouette, e.g. T-1 3/4, rectangular, cylindrical, side-mount, etc.

MAX FORWARD VOLTAGE V_F The maximum voltage drop across the LED when biased in a forward direction at a given forward current I_F.

I_F TEST The forward LED current at which the forward voltage V_F is specified.

PWR DSS P_{case} The maximum allowable power dissipation resulting from the flow of the respective device forward currents.

DC FWD CURR I_F The maximum allowable DC forward current.

PEAK WAVELENGTH λp The wavelength of maximum spectral radiation intensity.

TEMP RNG CODE An alpha/numeric code designating the operating ambient temperature range of the device.

FEATURES Additional features of the device.

LEAD CODE An alpha code corresponding to a given lead configuration for the device. See list of codes and their meaning.

DRAWING Indicates where mechanical/electrical configuration information for the device may be found.

2. LED LAMPS

IN ORDER OF: (1) COLOR (2) INTENSITY (3) IF TEST (4) BEAM ANGLE & (5) TYPE No.

LINE No.	5 TYPE NUMBER	2 LUMINOUS INTENSITY MIN (cd)	3 IF TEST (A)	4 BEAM ANGLE θ HI (°)	LENS TYPE	LAMP STYLE	VF MAX (V)	IF TEST (A)	PD RATED MAX (W)	IF RATED MAX (A)	PEAK WAVE-LENGTH λP (m)	TEMP. RANGE CODE - +	FEATURES	LEAD CODE	OUTLINE DRAWING
✪		3			6	7	8		10		12	✪	✪	✪	✪

(3) ⌀ – Luminance (fL)
† – Typical
□ – Maximum
* – Radiant intensity (W/Sr)
$ – Luminance (nt)

(6) Reference lens types include:
- Diffused
- Fresnel
- Jewel (faceted)
- Milk-white
- Transparent (colored non-diffusive)
- Water-clear (colorless non-diffusive)

(7) Reference styles include:
- Arch
- Cylindrical
- DIP
- Herm. Can
- Low-dome
- Panel-mount
- Rectangular
- Side-mount
- Square
- Triangular
- T-3/4
- T-1
- T-1 1/4
- T-1 1/2
- T-1 3/4

(8) § – Current limited

(10) % – Above 25°C

(12) ▼ – Average of Hi and Lo wavelength

(18) § – Anti-parallel connected
FO – Device has Fiber Optic applications
DWB – Double wire bound
SS-n – Strip source; n gives number of strips
MCE – Multiple Color Elem. (See Outline Dwg)

✪ **SYMBOLS AND CODES ON FIRST INTERPRETER PAGE, OE1**

SECTION 3 — INFRARED LED LAMPS (IREDs) — SECTION 3

INCLUDES: Devices to over 100 mW Optical Power

TYPE NUMBER	The manufacturer designated part number.
MIN POWER OUTPUT P_O	(ϕ) Luminous flux; Radiant flux: The respective time rate of flow of luminous or radiant energy (in watts).
MIN POWER OUTPUT I_F	The forward current at which the power output is specified.
MAX FWD VOLTAGE V_F	The voltage drop across the LED when biased in a forward direction at a given forward current I_F.
MAX FWD VOLTAGE I_F	The forward LED current at which the forward voltage V_F is specified.
PWR DISS PD	The maximum allowable power dissipation resulting from the flow of the respective device forward currents.
DC FWD CURR I_F	The maximum allowable forward current.
REV VOLT V_R	The maximum allowable applied voltage that causes the respective currents to flow in the reverse direction.
TEMP RNG CODE	An alpha/numeric code designating the operating ambient temperature range of the device.
PEAK WAVELENGTH λP	The wavelength of maximum spectral radiation intensity.
MIN AXIAL INTENSITY I_e	The luminous flux per unit solid angle where the given direction is the optical axis.
MIN AXIAL INTENSITY I_F	The forward current at which the minimum axial intensity is specified.
BEAM ANGLE θ_{HI}	The full cone angle of an optical axis within which the radiant intensity is not less than 50% of the maximum intensity.
I_F TEST	The forward current at which both the beam angle and the spectral band width is specified.
SPECTRAL BANDWIDTH $\Delta\lambda$	The wavelength interval in which a photometric or radiometric spectral quantity is not less than half of its maximum value.
RESP TIME	The general term used to describe rise, fall, turn-on, etc., time of an optoelectronic device, if it is understood that the input or output pulse may be radiant flux.
MAT	The material used in manufacturing the device.
MATERIAL & FEATURES	Additional features of the device and/or the manufacturing process.
LEAD CODE	An alpha code corresponding to a given lead configuration for the device. See list of codes and their meaning.
DRAWING	Indicates where mechanical/electrical configuration information for the device may be found.

3. INFRARED LED LAMPS (IREDs)

IN ORDER OF: (1) POWER OUTPUT (2) IF TEST (3) PEAK WAVELENGTH & (4) TYPE NUMBER

LINE No.	4 TYPE NUMBER	1 MIN. POWER OUTPUT Po (W)	2 IF TEST (A)	VF MAX (V)	IF TEST (A)	MAX RATINGS @ 25°C PD (W)	IF (A)	VR (V)	TEMP RNG. CODE - +	3 PEAK WAVE-LENGTH λp (m)	MIN AXIAL INTENSITY Ie W/Sr	IF TEST (A)	BEAM ANGLE θHI (°)	IF TEST (A)	SPECTRAL BAND WIDTH Δλ (m)	RESP. TIME (s)	MAT. & FEATURE MAT	LEAD CODE	DRAWING Ø-RND. Δ-RECT Δ-STRIP *-CHIP
✪		③		⑤		⑦	⑧	⑨	✪	⑪	⑫					⑰	⑱	✪	✪

③ † – Typical
♦ – Pk pulsed power
△ – W/Sr
$ – Irradiance (W/cm²)

⑤ † – Typical

⑦ % – Above 25°C

⑧ % – Above 25°C

⑨ % – Above 25°C

⑪ ▼ – Average of Hi & Lo wavelength

⑫ $ – Irradiance (W/cm²)
† – Typical
* – Radiance (W/Sr/cm²)

⑰ # – Optical rise time
* – Optical fall time

⑱ FO – Device has Fiber Optic applications
DWB – Double wire bound
SS-n – Strip source; n gives number of strips

✪ **SYMBOLS AND CODES ON FIRST INTERPRETER PAGE, OE1**

INCLUDES: IRED Array
Light Bar
Bar Graph & Lamp Array

TYPE NUMBER	The manufacturer designated device part number.
NUMBER OF ELEM	The number of active elements (diodes, resistors, etc.) the device contains.
COLOR	A numeric code representing the emission color of the device.
MAX FWD VOLTAGE V_F	The voltage drop across the LED when biased in forward direction at a given forward current I_F.
MAX FWD VOLTAGE I_F	The forward LED current at which the forward voltage V_F is specified.
PWR DISSIP PD	The maximum allowable power dissipation resulting from the flow of the respective device forward currents.
FWD CURR I_F	The maximum allowable forward current.
TEMP RNG CODE	An alpha/numeric code designating the operating ambient temperature range of the device.
PEAK WAVELENGTH λp	The wavelength of maximum spectral radiation intensity.
LUMINOUS INTENSITY I_V	The ratio of luminous flux of a source to the solid angle subtended by the detected area and that source. (A spatial flux density measure in LUMENS/STERADIAN = 1 CANDELA.)
LUMINOUS INTENSITY I_F	The forward current at which the luminous intensity is specified.
MIN IR RADIAT PWR P_0	(ϕ) Luminous flux; Radiant flux: The respective time rate of flow of luminous or radiant energy (in watts).
BEAM ANGLE θ_{HI}	The full cone angle of an optical axis within which the radiant intensity is not less than 50% of the maximum intensity.
MATERIAL	The material used in manufacturing the device.
FEATURES	Additional features of the device and/or the manufacturing process.
SCHEMATIC	The electrical connection diagram of the device.
DRAWING	Indicates where mechanical/electrical configuration information for the device may be found.

4. LED & IRED ARRAYS

IN ORDER OF TYPE AND: (1) NO OF ELEMENTS (2) COLOR & (3) TYPE NUMBER

LINE No.	3 TYPE NUMBER	1 NO. OF ELEM	2 COLOR	MAX FWD VOLTAGE VF (V)	IF TEST (A)	PD RATED MAX (W)	IF RATED MAX (A)	TEMP RNG. CODE - +	PEAK WAVE LGTH λp (m)	LUMINOUS INTENSITY (MIN) Iv (cd)	IF TEST (A)	MIN RADIAT PWR Po (W)	BEAM ANGLE θHI (°)	MAT	FEATURES	SCHE-MATIC	DRAWING
✪	✪		✪	(5)		(7)	(8)	✪		(11)				✪	(16)		✪

(5) † – Typical

(7) # – Per segment/cell

(8) § – Pulsed

(11) ø – Luminance (fL)
† – Typical

(16) MF – Matching factor
SS-n – Strip source; n gives number of strips
FO – Device has Fiber Optic Applications

✪ **SYMBOLS AND CODES ON FIRST INTERPRETER PAGE, OE1**

INCLUDES: Devices to over 100 W Pulsed Power

TYPE NUMBER	The manufacturer designated part number.
MIN POWER OUTPUT P_0	(ϕ) Luminous flux; Radiant flux: The respective time rate of flow of luminous or radiant energy (in watts).
MIN POWER OUTPUT I_F	The forward current at which the power output is specified.
PEAK WAVELENGTH λ_p	The wavelength of maximum spectral radiation intensity.
RESP TIME	The general term used to describe rise, fall, turn-on, etc., time of an optoelectronic device, if it is understood that the input or output pulse may be radiant flux.
MAX FWD VOLTAGE V_F	The voltage drop across the LED when biased in a forward direction at a given forward current I_F.
MAX FWD VOLTAGE I_F	The forward LED current at which the forward voltage V_F is specified.
DC FWD CURR I_F	The maximum allowable forward current.
REV VOLT V_R	The maximum allowable applied voltage that causes the respective currents to flow in the reverse direction.
BEAM ANGLE θ_{HI}	The full cone angle of an optical axis within which the radiant intensity is not less than 50% of the maximum intensity.
I_F TEST	The forward current at which both the beam angle and the spectral band width is specified.
SPECTRAL BANDWIDTH $\Delta\lambda$	The wavelength interval in which a photometric or radiometric spectral quantity is not less than half of its maximum value.
TEMP RNG CODE	An alpha/numeric code designating the operating ambient temperature range of the device.
MATERIAL	The material used in manufacturing the device.
FEATURES	Additional features of the device and/or the manufacturing process.
LEAD CODE	An alpha code corresponding to a given lead configuration for the device. See list of codes and their meaning.
DRAWING	Indicates where mechanical/electrical configuration information for the device may be found.

5. LASER DIODES

IN ORDER OF: (1) POWER OUTPUT (2) IF TEST (3) PEAK WAVELENGTH & (4) TYPE NUMBER

LINE No.	4 TYPE NUMBER	1 OUTPUT POWER Po MIN (W)	2 IF TEST (A)	3 PEAK WAVE-LENGTH λP (m)	RESP. TIME TYP (s)	VF MAX (V)	IF TEST	IF RATED MAX (A)	T VR RATED MAX (V)	BEAM ANGLE θHI (°)	IF TEST (A)	SPECTRAL BAND-WIDTH Δλ (m)	T TEMP RNGE CODE - +	MAT	FEATURES	LEAD CODE	OUTLINE DRAWIMG
✪	✪	3		5	6	7							✪		18	✪	✪

3 † – Typical
♦ – Pk pulsed power

5 ▼ – Average of Hi & Lo wavelength

6 # – Optical rise time

7 † – Typical

18 FO – Device has Fiber Optic applications
DWB – Double wire bound
SS-n – Strip source; n gives number of strips

✪ **SYMBOLS AND CODES ON FIRST INTERPRETER PAGE, OE1**

SECTION 10 PHOTODIODES SECTION 10

INCLUDES: Avalanche Photodiode
Dewar Type Detector
Laser Detector
PIN Photodiode
Pyroelectric Detector
General Purpose Photodiode
Blue Optimized Photodiode
Eye Response Optimized Photodiode
Infrared Optimized Photodiode
Ultraviolet Optimized Photodiode

TYPE NUMBER	The manufacturer designated part number.
TYPE	The type of diode or operating mode of the diode used such as PIN diode, Avalanche diode, etc.
MAX DARK CURR @ 25°C I_D	The current that flows through a photosensitive device in the dark condition. The dark condition is attained when the electrical parameter under consideration approaches a value which cannot be altered by further irradiation shielding.
MAX DARK CURR V_R	The reverse voltage at which the dark current is specified.
PWR DISSIP P_{case}	The maximum allowable power dissipation resulting from the flow of the respective device forward currents.
REV VOLT V_R	The maximum allowable applied voltage that causes the respective currents to flow in the reverse direction.
DC FWD CURR I_F	The maximum allowable forward current.
TEMP RNG CODE	An alpha/numeric code designating the operating ambient temperature range of the device.
MINIMUM RESPONSIVITY R_e	Responsivity, radiant: The quotient of the rms value of the fundamental component of the electrical output divided by the rms value of the fundamental component of the radiant flux of a specified distribution.
SOURCE	The illuminating source used to measure the responsivity. This is an alpha code representing the material and/or temperature of the emitting (illuminating) source.
λ	The wavelength at which the minimum responsivity is specified.
V_R	The reverse voltage at which the minimum responsivity is specified.
ACTIVE AREA	The photosensitive area of the device.
RESP TIME	The general term used to describe rise, fall, turn-on, etc., time of an optoelectronic device, if it is understood that the input or output pulse may be radiant flux.
CAPAC	The total device capacitance.
SPECTRAL RANGE LOW λ_L	The lower wavelength limit for the usability of the device.
SPECTRAL RANGE HIGH λ_H	The upper wavelength limit for the usability of the device.
NOISE EQ PWR P_n	Noise equivalent power: The rms value of the fundamental component of a modulated radiant flux incident on the detector area that will produce a signal at the detector output that is equal to the broadband rms noise in $W/\sqrt{Hz}$ at maximum responsitivity.
MTL	Material: A two letter alpha code representing the material(s) used in manufacturing the device.
LEAD CODE	An alpha code corresponding to a given lead configuration for the device. See list of codes and their meaning.
DRAWING	Indicates where mechanical/electrical configuration information for the device may be found.

Continued on next page

SECTION 10 — PHOTODIODES (CONT'D) — SECTION 10

10. PHOTODIODES

IN ORDER OF: (1)TYPE (2) RESPONSIVITY (3) MAX DARK CURRENT & (4) TYPE NUMBER

LINE No.	4 TYPE NUMBER	1 TYPE	3 MAX DARK CURR @ 25°C ID (A)	VR TEST (V)	MAX RATINGS @ 25°C PD (W)	VR (V)	IF (A)	TEMP RNG. CODE - +	2 MINIMUM RESPONSIVITY Re (A/W)	SOUR-CE	λ (m)	VR (V)	ACTIVE AREA Sq In	RESP. TIME (s)	CAPAC C (F)	SPECTRAL RANGE LOW λL (m)	HIGH λH (m)	NOISE EQ.PWR Pn Watt/Hz1/2	MTL	LEAD CODE	DRAWING

✪ (2) (3) (4) (6) (7) ✪ (10) ✪ (14) (15) (16) (17) (19) ✪ ✪ ✪

(2) ▼ – Device has Fiber Optic applications

(3)
1 – Avalance Photodiode
2 – Dewar Type Detector
3 – Laser Detector
4 – PIN Photodiode
5 – Pyroelectric Detector
6 – General Purpose Photodiode
7 – Blue Optimized Photodiode
8 – Eye Response Optimized Photodiode
9 – Infrared Optimized Photodiode
10 – Ultraviolet Optimized Photodiode

(4) † – Typical
* – Detectivity D (cmHz½/W)

(6) † – Typical
Dewar Hold Time:
$ – 2.0 hrs.
Ø – 4.0 hrs.
△ – 0.5 hrs.
– 6.0 hrs
⊠ – 8.0 hrs.
§ – 10 hrs.

(7) † – Typical

(10)
$ – Sensitivity (Acm²/W)
† – Typical
⊠ – Responsivity (V/W)
§ – Responsivity (A/lx)
# – Quantum efficiency (%)

(14)
§ – Overall surface dimension or light pipe area (fiber optics) (active surface not given)
* – Active area in sq. mm

(15)
– Rise time
* – Fall time
§ – Time constant

(16) # – Junction capacitance (F/cm²)

(17) $ – Pk spectral response

(19)
– Noise Equivalent power in watts
* – Noise current in A/(Hz) 1/2
§ – Lux/(Hz) 1/2

✪ **SYMBOLS AND CODES ON FIRST INTERPRETER PAGE, OE1**

SECTION 11 — PHOTOTRANSISTORS — SECTION 11

INCLUDES: N-channel PhotoJFET
NPN Bipolar

TYPE NUMBER The manufacturer designated device part number.

PWR DISS PD The maximum allowable power dissipation resulting from the flow of the respective device forward currents.

C/E VOLT V_{CEO} The maximum allowable collector to emitter voltage with the base lead open circuit.

COL CURR I_C The maximum allowable collector current.

TEMP RNG CODE An alpha/numeric code designating the operating ambient temperature range of the device.

MAX. DARK CURR I_D The current that flows through a photosensitive device in the dark condition. The dark condition is attained when the electrical parameter under consideration approaches a value which cannot be altered by further irradiation shielding.

MAX DARK CURR V_{CE} The collector to emitter voltage at which the dark current is specified.

MIN LIGHT CURR I_L The minimum current that flows through the device when it is exposed to radiant energy.

TEST CONDITIONS E_e Irradiance: The quotient of (1) the radiant flux incident on an element of the surface containing the point irradiated, by (2) the area of the element being irradiated.

$E_e = \frac{de}{dA}$; watt/square centimeter, W/cm². This is the irradiance condition for which the min light current is specified.

Continued on next page

TEST CONDITIONS SRC	Source: The source of the irradiation used to measure parameters at given irradiation levels.
TEST CONDITIONS λ	The wavelength at which the minimum light current is specified.
TEST CONDITIONS V_{CE}	The collector to emitter voltage at which the minimum light current is specified.
RESP TIME	The general term used to describe rise, fall, turn-on, etc., time of an optoelectronic device, if it is understood that the input or output pulse may be radiant flux.
PEAK WAVE LNTH λ_p	The wavelength of maximum sensitivity to incident spectral radiation.
MAX COLLECTOR SATURATION VOLT $V_{CE(SAT)}$	The collector to emitter voltage at an irradiation level where a further increase in the irradiation level will have little or no effect on the collector to emitter voltage.
MAX COLLECTOR SATURATION VOLT I_C	The collector current at which the collector saturation voltage is specified.
MAX COLLECTOR SATURATION VOLT E_e	The level of irradiance at which the collector saturation voltage is specified.
MTL	Material: A two letter alpha code representing the material(s) used in manufacturing the device.
TYPE CODE	A three or four-letter alphabetic code indicating device type.
LEAD CODE	An alpha code corresponding to a given lead configuration for the device. See list of codes and their meaning.
DRAWING	Indicates where mechanical/electrical configuration information for the device may be found.

11. PHOTOTRANSISTORS

IN ORDER OF: (1) TYPE (2) LIGHT CURRENT (3) Ee TEST & (4) TYPE NUMBER

LINE No.	4 TYPE NUMBER	MAX. RATINGS @25°C PD (W)	3 VCEO (V)	IC (A)	TEMP RNG. CODE - +	MAX. DARK CURR. ID @25°C (A)	VCE (V)	2 MIN. LIGHT CURR. IL (A)	TEST CONDITIONS 3 Ee (W/cm2)	SRC	λ (m)	VCE (V)	RESP. TIME (s)	PEAK WAVE-LNTH. λp (m)	MAX SATURATION VOTLAGE VCE (SAT) (V)	IC TEST (A)	Ee TEST W/cm2	MAT	1 TYPE CODE	LEAD CODE	DRAWING
✪	(2)	(4)		✪	(7)			(9)	(10) ✪			(13)	(14)		(16)		(18) ✪		(20) ✪		✪

(2) ▼ – Device has Fiber Optic applications

(4) △ – V_{CBO}

(7) % – Above 25°C
† – Typical

(9) % – Above 25°C
† – Typical

(10) * – Illuminance (fc)
$ – Illuminance (lx)

(13) * – Supply volt (V_{CC})

(14) # – Rise time
* – Fall time

(16) † – Typical

(18) $ – Illuminance (lx)

(20) JFET – PhotoJFET
NPN – NPN bipolar
PNP – PNP bipolar

✪ **SYMBOLS AND CODES ON FIRST INTERPRETER PAGE, OE1**

SECTION 12 PHOTODARLINGTONS SECTION 12

INCLUDES: NPN Photodarlington

TYPE NUMBER The manufacturer designated device part number.

PWR DISS PD The maximum allowable power dissipation resulting from the flow of the respective device forward currents.

C/E VOLT V_{CEO} The maximum allowable collector to emitter voltage with the base lead open circuit.

COL CURR I_C The maximum allowable collector current.

TEMP RNG CODE An alpha/numeric code designating the operating ambient temperature range of the device.

MAX DARK CURR I_D The current that flows through a photosensitive device in the dark condition. The dark condition is attained when the electrical parameter under consideration approaches a value which cannot be altered by further irradiation shielding.

MAX DARK CURR V_{CE} The collector to emitter voltage at which the dark current is specified.

LIGHT CURR I_L The minimum current that flows through the device when it is exposed to radiant energy.

TEST CONDITIONS E_e Irradiance: The quotient of (1) the radiant flux incident on an element of the surface containing the point irradiated, by (2) the area of the element being irradiated.

$E_e = \frac{de}{dA}$; watt/square centimeter, W/cm². This is the irradiance condition for which the min light current is specified.

TEST CONDITIONS SRC The source of the irradiation used to measure parameters at given irradiation levels.

TEST CONDITIONS λ The wavelength at which the minimum light current is specified.

TEST CONDITIONS V_{CE} The collector to emitter voltage at which the minimum light current is specified.

RESP TIME The general term used to describe rise, fall, turn-on, etc., time of an optoelectronic device, if it is understood that the input or output pulse may be radiant flux.

PEAK WAVELENGTH The wavelength of maximum sensitivity to incident spectral radiation.

DC CURRENT GAIN h_{FE} The ratio of the DC output current to the DC input current.

DC CURRENT GAIN V_{CE} The collector to emitter voltage at which the DC current gain is specified.

DC CURRENT GAIN I_C The collector current at which the DC current gain is specified.

MTL Material: A two letter alpha code representing the material(s) used in manufacturing the device.

TYPE CODE Indicates the type, NPN or PNP, of the photodarlington.

LEAD CODE An alpha code corresponding to a given lead configuration for the device. See list of codes and their meaning.

DRAWING Indicates where mechanical/electrical configuration information for the device may be found.

12. PHOTODARLINGTON

IN ORDER OF: (1) TYPE (2) LIGHT CURRENT (3) Ee TEST & (4) TYPE NUMBER

LINE No.	4 TYPE NUMBER	MAX. RATINGS @25°C PD (W)	VCEO (V)	IC (A)	TEMP RNG. CODE - +	MAX. DARK CURR.@25°C ID (A)	VCE (V)	2 MIN. LIGHT CURR. IL (A)	TEST CONDITIONS 3 Ee (W/cm2)	SRC	λ (m)	VCE (V)	RESP. TIME (s)	PEAK WAVE-LNTH. λp (m)	MINIMUM DC CURRENT GAIN hFE	VCE (V)	IC (A)	MAT	1 TYPE CODE	LEAD CODE	DRAWING
✪	②				✪	⑦			⑩ ✪				⑭		⑯			✪		✪	✪

② ▼ – Device has Fiber Optic applications

⑦ † – Typical

⑩ * – Responsivity (V/W)
$ – Sensitivity (A/W/cm²)
§ – Responsivity (A/lx)

⑭ # – Rise time

⑯ † – Typical

✪ **SYMBOLS AND CODES ON FIRST INTERPRETER PAGE, OE1**

SECTION 13 PHOTOTHYRISTORS SECTION 13

INCLUDES: Light Activated SCR (LASCR)
Photo Triac Driver

TYPE NUMBER The manufacturer designated device part number.

$I_{T(RMS)}$ The maximum allowable principle rms current of the device in the on state.

@T The temperature at which $I_{T(RMS)}$ is specified (degrees C).

V_{DRM} Repetitive peak off-state voltage: The maximum instantaneous value of the off-state voltage that occurs across a thyristor, including all nonrepetitive transient voltages.

I_{TSM} Nonrepetitive peak on-state current: The maximum (peak) value of the surge on-state current having a specified waveform and a short specified time interval.

TEMP RNG CODE An alpha/numeric code designating the operating ambient temperature range of the device.

MIN IRRANDIANCE TO TRIGGER E_e The minimum amount of irradiance required to turn the device on. Irradiance is defined as: the quotient of (1) the radiant flux incident on an element of the surface containing the point irradiated, by (2) the area of the element being irradiated.

SOURCE The source of the irradiation used to measure parameters at given irradiation levels.

λ The wavelength at which the minimum irradiance to trigger value is specified.

V_{AK} The anode to cathode voltage at which the minimum irradiance to trigger value is specified.

MAXI_{DRM}@V_{DRM}@MAX T Repetitive peak off-state current: The maximum (peak) instantaneous value of the off-state current that results from the application of repetitive peak off-state voltage at the maximum temperature.

TURN OFF TIME tq Circuit-commutated turn-off time: The time interval between the instant when the principal current has decreased to zero after external switching of the principal voltage circuit, and the instant when the thyristor is capable of supporting a specified principal voltage without turning on. The irradiation level is dark when measuring this parameter.

I_T The principal forward current at which the turn-off time is specified.

I_{GT}@25°C The maximum required DC gate current to switch the device from the off-state to the on-state.

V_{GT}@25°C Gate trigger voltage – The gate voltage resulting from the gate trigger current.

I_H@25°C The maximum principal DC current required to maintain the device in the on state.

TYPE CODE Indicates the type, LASCR or phototriac driver, of device.

LEAD CODE An alpha code corresponding to a given lead condiguration for the device. See list of codes and their meaning.

DRAWING Indicates where mechanical/electrical configuration information for the device may be found.

13. PHOTOTHYRISTORS

IN ORDER OF: (1) TYPE (2) IT(RMS) MAX (3) TEMP (4) VDRM MAX & (5) TYPE No.

LINE No.	5 TYPE NUMBER	MAXIMUM RATINGS @ 25°C: 2 IT(RMS) (A)	3 @ T (°C)	4 VDRM Δ-VRRM (V)	ITSM (A)	TEMP RNG. CODE - +	MIN. IRRADIANCE TO TRIGGER: EE W/cm2	S R C	TEST (m)	VAK TEST (V)	MAX IDRM Δ-IRRM @VDRM @MAX T (A)	MAX. TURN OFF TIME: TQ (s)	IT TEST (A)	MAX. IGT @ 25°C (A)	MAX. VGT @ 25°C (V)	MAX. IH @ 25°C (A)	1 TYPE CODE	LEAD CODE	DRAWING
✪		(3)		(5)	(6)	✪	(8)	✪		(12)				(15)	(16)	(17)	(18)	✪	✪

(3) $ – I_T(DC)

(5) △ – V_{RRM}

(6) # – Surge duration < ½ cycle

(8) † – Typical
$ – Illuminance (lx)
* – Illuminance (fc)

(12) $ – Less than Max Temp

(15) ☑ – Absolute Max.

(16) ☑ – Absolute Max.

(17) † – Typical

(18) LASCR – Light activated SCR
PHTDVR – Photo triac driver

✪ **SYMBOLS AND CODES ON FIRST INTERPRETER PAGE, OE1**

SECTION 14 PHOTOCIRCUITS SECTION 14

INCLUDES: Camera Controller
Opamp Output
Optical Receiver Output
Schmitt Trigger Output
Transistor Stage Output

TYPE NUMBER	The manufacturer designated device part number.
CIRCUIT FUNCT CODE	A numeric code indicating the type or function of the circuit.
CIRCUIT SENS ELEM CODE	A numeric code indicating the type of sensing device (element) used in the circuit.
OUTPUT VOLT V_O@25°C	The voltage at the output terminal(s) with the device in the on condition (active low output).
OUTPUT IMPED Z_O@25°C	The output load impedance at which the output voltage is specified.
OUTPUT f	The signal frequency at which the output voltage is specified.
TEMP RNG CODE	An alpha/numeric code designating the operating ambient temperature range of the device.
RATED SUP VOLT	The maximum allowable operating voltage differential between the positive (+) and negative (-) power supply terminals.
RATED SUP CURR	The maximum required power supply current at the rated supply voltage.
DESCRIPTION	A brief description of the devices main characteristics and/or parameters.
SCHEMATIC	The location of the devices electrical or functional block diagram.
DRAWING	Indicates where mechanical/electrical configuration information of the device may be found.

14. PHOTOCIRCUITS

IN ORDER OF: (1) CKT. FUNCTION CODE (2)O/P VOLT-Vo (3)O/P IMPED-Zo & (4)TYPE No.

LINE No.	4 TYPE NUMBER	1 CIRCUIT FUNCTION CODE	OUTPUT 2 VOLT Vo @25°C (V)	OUTPUT 3 IMPED. @ 25°C Zo (Ω)	OUTPUT f (Hz)	TEMP RNG. CODE - +	RATED SUP. VOLT ΔVs Pk-Pk (V)	RATED SUP. CURR. ΔIs Pk-Pk (A)	DESCRIPTION	SCHEMATIC	DRAWING
✪		(3)				✪			(10)	✪	✪

(3)
30 – Camera controller
31 – Opamp
32 – Optical receiver
33 – Schmitt trigger
34 – Transistor stage

(10)
FO – Device has Fiber Optic applications

✪ SYMBOLS AND CODES ON FIRST INTERPRETER PAGE, OE1

INCLUDES: Photodiode Array
Phototransistor Array

TYPE NUMBER The manufacturer designated device part number.

TYPE CODE A two character abbreviation indicating the type of sensing element used.

NO OF ELEMENTS The total number of sensing elements contained in the device.

TOT PWR DISS @25°C The maximum allowable power dissipation resulting from the flow of the respective device forward currents.

TEMP RNG CODE An alpha/numeric code designating the operating ambient temperature range of the device.

MAX VOLT The maximum allowable voltage at the output terminal with the output in the off condition.

MAX DARK CURRENT I_D The current that flows through a photosensitive device in the dark condition. The dark condition is attained when the electrical parameter under consideration approaches a value which cannot be altered by further irradiation shielding.

#-V_R △-V_{CE} Specifies the reverse voltage or the collector emitter-voltage at which the maximum dark current is valid.

MINIMUM LIGHT CURRENT I_L The minimum current that flows through the device when it is exposed to radiant energy.

E_e Irradiance: The quotient of (1) the radiant flux incident on an element of the surface containing the point irradiated, by (2) the area of the element being irradiated.

$E_e = \frac{de}{dA}$; watt/square centimeter, W/cm². This is the irradiance condition for which the min light current is specified.

SRC The source of the irradiation used to measure parameters at given irradiation levels.

#-V_R △-V_{CE} Specifies the reverse voltage on the collector-emitter voltage at which the minimum light current is valid.

CENTER SPACING The center to center spacing of the sensing elements.

RESP TIME The general term used to describe rise, fall, turn-on, etc., time of an optoelectronic device, if it is understood that the input or output pulse may be radiant flux.

MATCH FACTOR MIN/MAX The element to element photo-current matching factor i.e., a measure of how well the separate element characteristics are matched.

MAT The material used in manufacturing the device.

FEATURES Additional features of the device and/or the manufacturing process.

SCHEMATIC The location of the devices electrical or functional block diagram.

DRAWING Indicates where mechanical/electrical configuration information for the device may be found.

15. PHOTODECTOR LINEAR ARRAYS

IN ORDER OF: (1) SENSING ELEMENT (2) No OF ELEMENTS (3) LIGHT CURRENT & (4) TYPE NUMBER

LINE No.	4 TYPE NUMBER	1 TYPE CODE	2 NO. OF ELE-MENTS	PD RATED MAX (W)	TEMP RNG. CODE - +	MAX. VOLT #-VR Δ-VCEO (V)	MAX. DARK CURRENT ID (A)	#-VR Δ-VCE (V)	3 MINIMU M LIGHT CURRENT IL #-RESP (A)	Ee (W/cm2)	SRC	#-VR Δ-VCE (V)	CENTER SPACING (in)	RESP. TIME (s)	MATCH FACT -OR- MIN/MAX	MAT	MATERIAL & FEATURES	SCHE-MATIC	DRAWING
✪		③		⑤	✪		⑧	⑨	⑩		✪	⑬	⑭		⑯	✪	⑰	✪	✪

③ DI – Photodiode
TR – Phototransistor

⑤ # – Per element/cell

⑧ † – Typical

⑨ △ – V_{CE}
– V_R

⑩ # – Responsitivity (A/W)
* – Responsitivity (A/fc)
† – Typical V-Cm² /W
% – Responsitivity (C/j/cm²)
♦ – Sensitivity PA - Cm²/uW

⑬ △ – V_{CE}

⑭ △ – Microns

⑯ * – Clock Repitition Rate MHz, Max

⑰ § – Self-scanned
* – Matrix/Image

✪ **SYMBOLS AND CODES ON FIRST INTERPRETER PAGE, OE1**

SECTION 16 LIGHT DEPENDENT RESISTORS (LDRs) SECTION 16

INCLUDES: Light Dependent Resistor
"Photobridge"
Photopotentiometer

TYPE NUMBER	The manufacturer designated device part number.
MAX PWR @25°C	The maximum allowable power dissipation resulting from the flow of the respective device forward currents.
PEAK WAVELENGTH λp	The wavelength of maximum spectral radiation intensity.
MAX VOLT V	The maximum allowable voltage at the output terminal with the output in the off condition.
TEMP RNG CODE	An alpha/numeric code designating the operating ambient temperature range of the device.
LIGHT RESISTANCE R_{on}	The device small signal low frequency resistance under given conditions of high level illumination.
E_V (fc)	The illumination in footcandles (fc) at which the light resistance is specified.
E_V (lx)	The incident illumination in lux (lx) at which the light resistance is specified.
NO. OF ELEMENTS	The number of electrically isolated resistors per package.
SOURC	The illuminating source (material and temperature) used to measure the light resistance.
DARK RESISTANCE R_{off}	The device small signal low frequency resistance under given conditions of low or zero illumination.
SECs AFTER	The time between removal of control signals and/or removal of illumination source and the dark resistance measurement.
E_V (fc)	The illumination E_V, (in footcandle) that was present a given number of seconds before the dark resistance was measured.
E_V (lx)	The illumination E_V (in lux), that was present a given number of seconds before the dark resistance was measured.
SOURC	The illuminating source that provided the illumination or irradiation a given number of seconds before the dark current was measured.
MATERIAL	The material used in manufacturing the device.
FEATURES	Additional features of the device and/or the manufacturing process.
LEAD CODE	An alpha code corresponding to a given lead configuration for the device. See list of codes and their meaning.
DRAWING	Indicates where mechanical/electrical configuration information for the device may be found.

16. LIGHT DEPENDENT RESISTORS (LDRs)

IN ORDER OF: (1) TYPE (2) No. ELEMENTS (3) Ron (4) Ev TEST (5) V MAX & (6) TYPE No

LINE No.	6 TYPE NUMBER	PD RATED MAX (W)	PEAK WAVE-LENGTH λp (m)	5 VOLT MAX (V)	TEMP RNG. CODE - +	3 LIGHT RESISTANCE TEST CONDITIONS Ron (Ω)	Ev 4 (fc)	Ev (lx)	SRC	2 No. ELE-MNTS	DARK RESISTANCE Roff (Ω)	SECs. AFTER (s)	Ev TEST (fc)	Ev TEST (lx)	SRC	1 MAT	FEATURES	LEAD CODE	DRAWING
✪	✪		(4)	(5)	✪	(7)					(13)					✪		✪	✪

(4) □ – Maximum

(5) △ – AC

(7) ⌀ – Minimum

(13) Dark Resistance in a Photoconductive Cell is measured after a specified time in seconds, after input light of specified intensity is cut off.

✪ **SYMBOLS AND CODES ON FIRST INTERPRETER PAGE, OE1**

INCLUDES: Infrared Detector
Light Detector, General Purpose
Solar Cell
Tape/Card Reader Cell

TYPE NUMBER	The manufacturer designated device part number.
ACTIVE SURFACE	The surface area of the photosensitive portion of the device.
CELL USE	The basic type or use of the cell.
MIN OUTPUT CURR - Io	The guaranteed minimum device output current, usually specified as a short circuit value, under given illumination or irradiation conditions.
MIN OUTPUT VOLT - Vo	The guaranteed minimum device output voltage, usually specified as an open circuit value, under given illumination or irradiation conditions.
MIN OUTPUT PWR P_O	The minimum available device output power under given conditions of illumination or irradiation.
TEST CONDITIONS E_V (fc)	The incident illumination in footcandles (fc) at which the output parameters are specified.
TEST CONDITIONS E_V (lx)	The incident illumination in lux (lx) at which the output parameters are specified.
E_e	The incident irradiation in watts/cm² at which the output parameters are specified.
SOURC	The irradiation or illuminating source used to measure the output parameters.
PEAK WAVELENGTH λp	The wavelength of maximum spectral radiation intensity.
MAX REV VOLT V_R	The maximum allowable applied voltage that causes the respective currents to flow in the reverse direction.
TEMP RNG CODE	An alpha/numeric code designating the operating ambient temperature range of the device.
POLARITY	Indicates whether the device material is p on n or n on p.
MAT	The material used in manufacturing the device.
MATERIAL & FEATURES	Additional features of the device and/or the manufacturing process.
LEAD CODE	An alpha code corresponding to a given lead configuration for the device. See list of codes and their meaning.
DRAWING	Indicates where mechanical/electrical configuration information for the device may be found.

17. PHOTOVOLTAIC CELLS

IN ORDER OF: (1) TYPE (2) Voc MIN (3) Isc MAX & (4) TYPE NUMBER

LINE No.	4 TYPE NUMBER	ACTIVE SURFACE	1 TYPE CODE	3 MIN. OUTPUT CURRENT Isc (A)	2 MIN. OUTPUT VOLTAGE Voc (V)	MIN. OUTPUT PWR. Po (W)	TEST CONDITIONS Ev FT.C (fc)	TEST CONDITIONS Ev LUX (lx)	TEST CONDITIONS Ee (W/cm2)	SOURC	PEAK WAVE LENGTH λp (m)	MAX. REV. VOLT VR (V)	TEMP RNG. CODE - +	POLARITY	MATERIAL & FEATURES MAT	LEAD CODE	DRAWING
✪		3	4	5	6	7				✪	12	13	✪	15	✪	✪	✪

3
§ – Total device dimension (Active surface not given)
* – Optional Protective Coating
△ – Min/Max

4
ID – Infrared detector
LD – Light detector, general purpose
SC – Solar cell
TC – Tape/Card reader
* – Cell as coded above is a calibrated reference

5
† – Typical

6
† – Typical

7
† – Typical

12
§ – CIE corrected

13
⊘ – Max. operating voltage

15
P – P-on-N
N – N-on-P

✪ **SYMBOLS AND CODES ON FIRST INTERPRETER PAGE, OE1**

SECTION 18 PHOTOVOLTAIC ARRAYS SECTION 18

INCLUDES: Power Converter Solar Array
Tape/Card Reader Cell

TYPE NUMBER	The manufacturer designated device part number.
TYPE OF ARRAY	The primary use or application of the device.
NO OF ELEM	The total number of sensing elements contained in the device.
PWR OUT P_0	The typical power available at the device output under given operating conditions.
O/P CURR Isc	The guaranteed minimum device output current, usually specified as a short circuit value, under given illumination or irradiation conditions.
O/O VOLT Voc	The guaranteed minimum device out-put voltage, usually specified as an open circuit value, under given illumination or irradiation conditions.
RESP TIME	The general term used to describe rise, fall, turn-on, etc., time of an optoelectronic device, if it is understood that the input or output pulse may be radiant flux.
TEST CONDITIONS E_V (fc)	The incident illumination in footcandles (fc) at which the output parameters are specified.
TEST CONDITIONS E_V (lx)	The incident illumination in lux (lx) at which the output parameters are specified.
TEST CONDITIONS E_e	The incident irradiation is watts/cm² at which the output parameters are specified.
TEST CONDITIONS SRC	The irradiation or illuminating source used to measure the output parameters.
TEST CONDITIONS R_L	The load resistance at which the output parameters are specified.
TEMP RNG CODE	An alpha/numeric code designating the operating ambient temperature range of the device.
ACTIVE AREA	The surface area of the photosensitive portion of the device.
CENTER SPACING	The center to center spacing of the sensing elements.
POLARITY	Indicates whether the device material is p on n or n on p.
MATERIAL	The material used in manufacturing the device.
SCHEMATIC	The location of the devices electrical or functional block diagram.
DRAWING	Indicates where mechanical/electrical configuration information for the device may be found.

18. PHOTOVOLTAIC ARRAYS

IN ORDER OF: (1) TYPE (2) OUTPUT VOLTAGE (3) OUTPUT CURRENT & (4) TYPE NUMBER

LINE No.	4 TYPE NUMBER	1 TYPE CODE	NO. OF ELEM	PWR OUT Po (W)	3 OUTPUT CUURENT Isc (A)	2 OUTPUT VOLTAGE Voc (V)	RESP. TIME (s)	TEST CONDITIONS Ev FT.C (fc)	Ev LUX (lx)	Ee (W/cm2)	SRC	RL (Ω)	TEMP RNG. CODE - +	ACT-IVE AREA (in2)	CENTER SPACING (in)	POLAR-ITY	MATER-IAL	SCHE-MATIC	DRAWING
✪		(3)		(5)	(6)	(7)					✪		✪	(15)		(17)	✪	✪	✪

(3) PC – Power Converter
TC – Tape/Card Reader

(5) # – Per element/cell

(6) # – Per element/cell

(7) # – Per element/cell

(15) * – Active area in sq. mm

(17) P – P-on-N
N – N-on-P

✪ **SYMBOLS AND CODES ON FIRST INTERPRETER PAGE, OE1**

INCLUDES: Emitter-Sensor Array
Gap Detector
Pyroelectric Detector
Reflective Scanner Module
Reflex Detector

TYPE NUMBER	The manufacturer designated device part number.
CHANNELS	The number of electrically independent emitter-sensor pairs per device.
DETECTOR OUTPUT CURRENT	The minimum detector output current under given conditions of emitter current and detector voltage.
I_F	The forward current of the emitter at which the detector output current is specified.
V_{CC}	The supply or source voltage of the detector at which the detector output current is specified.
MAX DETECT SAT VOLT $V_{CE(SAT)}$	The collector to emitter voltage at an irradiation level where a further increase in the irradiation level will have little or no effect on the collector to emitter voltage.
I_F	The forward current of the emitter at which the detector saturation voltage is specified.
NOMIN DIST	The nominal distance (spacing) between the emitter and detector.
MAX DIODE REV V (V_R)	The maximum allowable applied voltage that causes the respective currents to flow in the reverse direction.
MAX DIODE FWD I (I_F)	The maximum allowable forward current.
MAX C/E VOLT V_{CE}	The maximum allowable collector to emitter voltage of the output photo transistor.
TEMP RNG CODE	An alpha/numeric code designating the operating ambient temperature range of the device.
RESP TIME	The general term used to describe rise, fall, turn-on, etc., time of an optoelectronic device, if it is understood that the input or output pulse may be radiant flux.
TYPE OF O/P CKT	The type (photodiode, phototransistor, etc.) of detector element used in the device.
DESCRIPTION	A brief description of the device's main characteristics and/or parameters.
SCHEMATIC	The location of the device's electrical or functional block diagram.
DRAWING	Indicates where mechanical/electrical configuration information of the device may be found.

19. GAP & REFLECTIVE SENSORS

IN ORDER OF FORM AND: (1) CHANNELS (2) OUTPUT CURRENT & (4) TYPE NUMBER

LINE No.	4 TYPE NUMBER	1 CHAN	2 DETECTOR OUTPUT CURRENT IC (A)	4 IF (A)	VCC (V)	MAX.DETECT. SAT. VOLT VCE(SAT) (V)	IF (A)	NOM. SEP. (in)	MAX. DIODE REV V VR (V)	MAX. DIODE FWD I IF (A)	MAX. C/E VOLT VCE (V)	TEMP RNG. CODE - +	RESP TIME (s)	TYPE OF O/P CKT	DESCRIPTION	SCHE-MATIC	DRAWING
✪	✪		4	5	6	7	8	9	10	11		✪	14	15	16	✪	✪

(4) ☑ – Maximum
Ø – Minimum

(5) * – Total Supply Current
– Incandescent lamp current

(6) # – V_{CE}

(7) † – Typical

(8) # – Max. Output Current

(9) Gap distance or distance to reflecting surface
$ – Variable air gap
☑ – Maximum distance
* – Millimeters

(10) † – Typical
$ – Lamp Voltage

(11) # – Max. output current
$ – Lamp Current

(14) # – Current rise time
* – Current fall time

(15) DI – Photodiode
TR – Phototransistor
TC – Transistor Chip
DA – Darlington
AP – Amplifier
ST – Schmitt Trigger

(16) MF – Matching Factor
INC – Incandescent Lamp
FIL – Filter

✪ **SYMBOLS AND CODES ON FIRST INTERPRETER PAGE, OE1**

SECTION 25 OPTOCOUPLER: PHOTOCELL OUTPUT SECTION 25

INCLUDES: LDR Output
Photovoltaic Output

TYPE NUMBER	The manufacturer designated device part number.
TYPE OF PHOTOCELL	The basic type or use of the cell.
MAX PWR DISS PD	The maximum allowable power dissipation resulting from the flow of the respective device forward currents.
TEMP RNG CODE	An alpha/numeric code designating the operating ambient temperature range of the device.
V_{IO} ISOL VOLT	The maximum allowable forward current of the emitting element.
RISE TIME	The time required for the voltage across the output cell to fall to 10 percent of its final value, measured from the instant that maximum rated control voltage is applied to the emitter.
DECAY TIME	The time required for the voltage across the output cell to rise to 90 percent of its final value, measured from the instant that maximum rated control voltage is removed from the emitter.
INPUT SOURCE TYPE	The type of emitter used (LED, etc.).
INPUT SOURCE RATED VOLT	The maximum allowable voltage across the emitter (input terminals)
INPUT SOURCE RATED CURR	The maximum allowable current through the emitter (input terminals)
OUTPUT DC CELL VOLT	The typical output cell voltage at rated input conditions.
CHANNELS, INPUT	The number of electrically and optically isolated input channels.
CHANNELS, OUTPUT	The number of electrically isolated output cells. Note: some cells may be tapped; see schematic for configuration.
OUTPUT ON RESIS R_{ON}	The device small signal low frequency resistance under given conditions of high level illumination.
OUTPUT OFF RESIS R_{OFF}	The device small signal low frequency resistance under given conditions of low or zero illumination.
MAT	The material used in manufacturing the device.
MATERIAL & FEATURES	Additional features of the device and/or the manufacturing process.
SCHEMATIC	The location of the devices electrical or functional block diagram.
DRAWING	Indicates where mechanical/electrical configuration information for the device may be found.

25. OPTOCOUPLERS: PHOTOCELL OUTPUT

IN ORDER OF: (1) TYPE (2) CHANNELS (3) V(IO) (4) R(on) & (5) TYPE NUMBER

LINE No.	5 TYPE NUMBER	1 TYPE CODE	PD RATED MAX (W)	TEMP RNG. CODE - +	COUPLED CHAR. 3 VIO ISOL VOLT (V)	RISE TIME (s)	DECAY TIME (s)	INPUT SOURCE TYPE	RATED VOLT Δ-VR (V)	RATED CURR. Δ-IR (A)	OUTPUT DC CELL VOLT *AC ΔPk (V)	CHANNELS 2 INPUT	OUTPT	4 ON RESIS. Ron (Ω)	OFF RESIS. Roff (Ω)	MATER. & FEATURE MAT	SCHE-MATIC	DRAWING Ø-RND. ⌀-RECT. Δ-STRIP *-CHIP
✪		③	④	✪	⑥		⑧	⑨	⑩	⑪				⑮		⑰	✪	✪

③ LDR – Photoconductive cell Light dependent resistor or
PVC – Photovoltaic cell

④ ♦ – Output Dissipation
% – Above 25°C

⑥ § – AC Voltage

⑧ # – Turn-off time

⑨ GAS – Gas Discharge
INC – Incandescent
LED – LED
NEO – Neon
* – Other input sources available

⑩ Δ V_R
§ – AC

⑪ Δ – I_R

⑮ § – Each side

⑰ For Material Code see Symbols & Codes Common to More Than One Technical Section.
§ – Seconds (test condition of R off)

✪ **SYMBOLS AND CODES ON FIRST INTERPRETER PAGE, OE1**

SECTION 26 OPTOCOUPLER: PHOTOTRANSISTOR OUTPUT SECTION 26

INCLUDES: NPN-output Devices

TYPE NUMBER	The manufacturer designated device part number.
PWR DISS PD	The maximum allowable power dissipation resulting from the flow of the respective device forward currents.
COLL CURR I_C	The maximum allowable DC collector current.
C/E VOLT V_{CEO}	The maximum allowable collector to emitter voltage with the base lead open circuit.
CHANNELS	The number of electrically independent coupler channels.
FWD CURR I_F	The maximum allowable forward current of the emitting element.
ISOL VOLT V_{IO}	The maximum allowable input to output voltage differential (isolation voltage input to output).
TEMP RNG CODE	An alpha/numeric code designating the operating ambient temperature range of the device.
CTR IC/IF CURR TRANSF RAT h_F	The forward current transfer ratio or efficiency is the ratio of the emitting device forward current to the receiving device on current.
I_F	The forward current at which the current transfer ratio is specified.
V_{CE}	The collector to emitter voltage of the receiver photo transistor at which the current transfer ratio is specified.
RESP TIME	The general term used to describe rise, fall, turn-on, etc., time of an optoelectronic device, if it is understood that the input or output pulse may be radiant flux.
MAX INPUT DIODE CHAR FWD VOLT V_F	The maximum forward voltage drop across the input diode resulting from the flow of a specified forward current.
MAX INPUT DIODE CHAR I_F	The forward current at which the forward voltage is specified.
O/P TRANS CHAR COLL SAT VOLT $V_{CE(SAT)}$	The collector to emitter voltage at an irradiation level where a further increase in the irradiation level will have little or no effect on the collector to emitter voltage.
O/P TRANS CHAR I_C	The collector current at which the collector saturation voltage is specified.
O/P TRANS CHAR I_F	The forward current of the emitting device at which the collector saturation voltage $V_{CE(SAT)}$ is specified.
MTL	Material: A two letter alpha code representing the material(s) used in manufacturing the device.
SCHEMATIC	The location of the devices electrical or functional block diagram.
DRAWING	Indicates where mechanical/electrical configuration information for the device may be found.

26. OPTOCOUPLERS: PHOTOTRANSISTOR OUTPUT

IN ORDER OF: (1) V(IO) (2) CHANNELS (3)CURR. TRANSFER RATIO & (4) TYPE No.

LINE No.	4 TYPE NUMBER	PD RATED MAX (W)	IC RATED MAX (A)	VCE RATED MAX (V)	2 CHAN-NELS	FWD. CURR. IF (A)	1 MAX ISOL. VOLT VIO (V)	TEMP RNG. CODE - +	COUPLED CHARACTS. 3 CTR=IC/IF(MIN) CURR TRANSF RAT. hF	IF (A)	VCE (V)	RESP. TIME (S)	MAX INPUT DIODE CHAR. FWD.VOLT VF (V)	IF (A)	MAX.O/P TRANS. CHAR. COLL. SAT. VOLT VCE(SAT) (V)	IC (A)	IF (A)	MAT	SCHE-MATIC	DRAWING Ø-RND. Ø-RECT. Δ-STRIP *-CHIP
✪		(3)						✪ (10)				(13)			(16)			(19)	✪	✪

(3) ♦ – Output dissipation
† – Typical

(10) △ – Percent (%)
† – Typical

(13) * – Fall time

(16) † – Typical

(19) P – PNP
N – NPN
For Material Code see Symbols & Codes Common to More Than One Technical Section.

✪ **SYMBOLS AND CODES ON FIRST INTERPRETER PAGE, OE1**

SECTION 27 OPTOCOUPLER: PHOTODARLINGTON OUTPUT SECTION 27

INCLUDES: NPN-output Devices

TYPE NUMBER	The manufacturer designated device part number.
PWR DISS PD	The maximum allowable power dissipation resulting from the flow of the respective device forward currents.
COLL CURR I_C	The maximum allowable collector current of the output photo transistor.
C/E VOLT V_{CEO}	The maximum allowable collector to emitter voltage with the base lead open circuit.
REV VOLT V_R	The maximum allowable applied voltage that causes the respective currents to flow in the reverse direction.
FWD CURR I_F	The maximum allowable forward current of the emitting element.
ISOL VOLT V_{IO}	The maximum allowable input to output voltage differential (isolation voltage input to output).
TEMP RNG CODE	An alpha/numeric code designating the operating ambient temperature range of the device.
CTR IC/IF CURR TRANSF RATIO h_F	The forward current transfer ratio or efficiency is the ratio of the emitting device forward current to the receiving device on current.
I_F	The forward current at which the current transfer ratio is specified.
V_{CE}	The collector to emitter voltage of the receiver photo transistor at which the current transfer ratio is specified.
RESP TIME	The general term used to describe rise, fall, turn-on etc., time of an optoelectronic device, if it is understood that the input or output pulse may be radiant flux.
MAX INPUT DIODE CHAR FWD VOLT V_F	The maximum forward voltage drop across the input diode resulting from the flow of a specified forward current.
MAX INPUT DIODE CHAR FWD VOLT I_F	The forward current at which the forward voltage is specified.
MAX O/P DARL CHARACTS DARK CURR I_D	The current that flows through a photosensitive device in the dark condition. The dark condition is attained when the electrical parameter under consideration approaches a value which cannot be altered by further irradiation shielding.
MAX O/P DARL CHARACTS V_{CE}	The collector to emitter voltage at which the dark current is specified.
MATER	The material used in manufacturing the device.
SCHEMATIC	The location of the devices electrical or functional block diagram.
DRAWING	Indicates where mechanical/electrical configuration information for the device may be found.

27. OPTOCOUPLERS: PHOTODARLINGTON OUTPUT

IN ORDER OF: (1) V(IO) (2) CHANNELS (3) CURR. TRANSFER RATIO & (4) TYPE No.

LINE No.	4 TYPE NUMBER	PD RATED MAX (W)	IC RATED MAX (A)	VCE RATED MAX (V)	2 CHAN-NELS	INPUT IF RATED MAX (A)	MAX ISOL. VOLT VIO (V)	TEMP RNG. CODE - +	COUPLED CHARACTS. 3 CTR=IC/IF (MIN) CURR TRANSF RATIO hF	IF (A)	VCE (V)	RESP. TIME (S)	MAX. INPUT DIODE CHAR. FWD. VOLT VF (V)	IF (A)	MAX O/P DARL CHARACTS. DARK CURR. ID (A)	VCE (V)	MAT.	SCHE-MATIC	DRAWING Ø-RND. Ø-RECT. Δ-STRIP *-CHIP
✪	(3)							✪	(10)		(12)	(13)					(18)	✪	✪

(3) ♦– For Output Darlington

(10) † – Typical
△ – Percent %

(12) * – V_{CC}

(13) # – Rise time
* – Fall time

(18) P – PNP
N – NPN

✪ **SYMBOLS AND CODES ON FIRST INTERPRETER PAGE, OE1**

SECTION 28 OPTOCOUPLERS: PHOTOTHYRISTOR OUTPUT SECTION 28

INCLUDES: SCR/Half Wave Output
Triac/Full Wave Output
Triac Driver Output

TYPE NUMBER	The manufacturer designated device part number.
MAX RATINGS I_T	The maximum allowable principal rms current of the device in the on state.
MAX RATINGS REP OFF-ST V	Repetitive peak off-state voltage: The maximum instantaneous value of the off-state voltage that occurs across a thyristor, including all nonrepetitive transient voltages.
MAX RATINGS SURGE CURR I_{TSM}	Nonrepetitive peak on-state current: The maximum (peak) value of the surge on-state current having a specified waveform and a short specified time interval.
MAX RATINGS FWD CURR I_F	The maximum allowable forward current. (Refers to emitting element.)
MAX RATINGS ISOL VOLT V_{IO}	The maximum allowable input to output voltage differential (isolation voltage input to output).
TEMP RNG CODE	An alpha/numeric code designating the operating ambient temperature range of the device.
MAX INPUT TRIGGER CURR I_{FT}	The emitting device forward current necessary to trigger the coupled thyristor.
V_{AK}	The anode to cathode or main terminal voltage of the output thyristor at which the input trigger current is specified.
TURN ON t_{on}	The time interval between a specified point on the input pulse and the instant when the principal voltage (current) has dropped (risen) to a specified low (high) value during switching of a thyristor from the off state to the on state.
INPUT DIODE CHARACTS MAX FWD V (V_F)	The maximum forward voltage drop across the input diode resulting from the flow of a specified forward current.
INPUT DIODE CHARACTS I_F	The forward current at which the forward voltage is specified.
ON-STATE VOLT V_{TM}	The main terminal voltage of the output thyristor in the on condition at a specified current level.
I_{TM}	The on state current at which the on-state voltage is specified.
MAX REV I I_{DM}	The maximum reverse leakage current through the output thyristor measured under dark conditions.
MAT	The material used in manufacturing the device.
SCHEMATIC	The location of the devices electrical or functional block diagram.
DRAWING	Indicates where mechanical/electrical configuration information for the device may be found.

28. OPTOCOUPLERS: PHOTOTHYRISTOR OUTPUT

IN ORDER OF: (1) TYPE (2) V(IO) (3) OFF-ST V MAX (4) IT(RMS) MAX & (5) TYPE No.

LINE No.	4 TYPE NUMBER	4 IT RMS RATED MAX (A)	3 REP OFF-ST V MAX VDRM (V)	SURGE CURR. MAX ITSM (A)	1 TYPE CODE	INPUT IF RATED MAX (A)	2 MAX ISOL. VOLT VIO (V)	TEMP RNG. CODE - +	COULPED CHARACTS. 3 MAX INPUT TRIGGER CUR IFT (A)	VAK (V)	TURN ON ton (S)	INPUT DIODE CHARACTS. MAX FWD. V. VF (V)	IF (A)	OUTPUT THYR. CHAR. ON-STATE VOLT (MAX) VTM (V)	ITM (A)	MAX REV I.-IDM Δ-IRM (A)	MAT.	SCHE-MATIC	DRAWING Ø-RND. Ø-RECT. Δ-STRIP *-CHIP
✪		(3)							✪							(17)	(18)		✪

(3) $ – I_T(DC)

(17) Δ – I_{RM}

(18) § – Anti-parallel

✪ SYMBOLS AND CODES ON FIRST INTERPRETER PAGE, OE1

SECTION 29 OPTOCOUPLERS: PHOTOCIRCUIT OUTPUT SECTION 29

INCLUDES: Amplifier Output
Logic Gate Output
Schmitt Trigger
Transistor Stage Output

TYPE NUMBER The manufacturer designated device part number.

OUTPUT CIRCUIT CODE The type of output. (Transistor, schmitt trigger, etc.)

MAX PWR DISS PD The maximum allowable power dissipation resulting from the flow of the respective device forward currents.

SUPP ΔV The maximum allowable operating voltage differential between the positive (+) and negative (–) power supply terminals.

REV VOLT V_R The maximum allowable applied voltage that causes the respective currents to flow in the reverse direction. (Refers to emitting element.)

FWD CURR I_F The maximum allowable forward current. (Refers to emitting element.)

ISOL VOLT V_{IO} The maximum allowable input to output voltage differential (isolation voltage input to output).

TEMP RNG CODE An alpha/numeric code designating the operating ambient temperature range of the device.

PROP DELAY TIME t_{pd} The typical time delay between the 50% points on the input and output waveforms when the output changes state due to a change of input state.

MAX IN REV I @ V_R (I_R) The maximum leakage current of the emitter at rated reverse voltage V_R.

V_{OH} MIN The minimum output voltage with input conditions applied that, according to product specifications, will establish a high level at the output.

V_{OL} MAX The maximum output voltage with input conditions applied that, according to product specifications, will establish a low level at the output.

DESCRIPTION A brief description of the devices main characteristics and/or parameters.

SCHEMATIC The location of the devices electrical or functional block diagram.

DRAWING Indicates where mechanicl/electrical configuration information for the device may be found.

29. OPTOCOUPLERS: PHOTOCIRCUIT OUTPUT

IN ORDER OF: (1) OUTPUT CIRCUIT CODE (2) SCHEMATIC & (3) TYPE NUMBER

LINE No.	3 TYPE NUMBER	1 OUTPUT CIRCUIT CODE	CHAN	MAX. RATINGS @ 25°C PD (W)	SUPP ΔVs Pk-Pk (V)	VR (V)	FWD. CURR. IF (A)	ISOL. VOLT VIO (V)	TEMP RNG. CODE - +	PROP DELAY TIME tpd (S)	MAX IN REV I @VR IR (A)	OUTPUT LOGIC LEVELS VOH MIN (V)	VOL MAX (V)	DESCRIPTION	2 SCHE-MATIC	DRAWING
✪	(3)			(5)						(11)	(13)				✪	✪

(3)
Amplif – Amplifier output
LgGate – Logic gate output
Schmit – Schmitt trigger output
TrnStg – Transistor stage output
§ – Device as coded above has integrated sensing element

(5) ♦– Output dissipation

(11) # – Rise time
* – Fall time

(13)
☑ – Maximum
† – Typical
$ – Open Collector Output

✪ **SYMBOLS AND CODES ON FIRST INTERPRETER PAGE, OE1**

SECTION 35 — LED CHARACTER DISPLAYS — SECTION 35

INCLUDES: Seven-segment Numeric LED Display
Segmented Alphanumeric LED Display
4x7 Dot Matrix LED Display
5x7 Dot Matrix LED Display
Intelligent Displays

TYPE NUMBER The manufacturer designated device part number.
CHAR HGHT The character (digit) height in inches.
NO OF CHAR The total number of characters in the display.
LUMINOUS INTENSITY I_V The ratio of luminous flux of a source to the solid angle subtended by the detected area and that source. (A spatial flux density measure in LUMENS/STERADIAN = 1 CANDELA.)
I_F The forward current at which the luminous intensity is specified.
COLOR The emission color of the device.
CONNECTION The internal configuration of the display, i.e. common cathode, common anode, etc.
DISP. NOMEN. See table below for nomenclature details.
PWR DISS PD The maximum allowable power dissipation resulting from the flow of the respective device forward currents.
I_F The maximum allowable forward current.
TEMP RNG CODE An alpha/numeric code designating the operating ambient temperature range of the device.
MAX FWD VOLT V_F The voltage drop across the LED when biased in a forward direction at a given forward current I_F.
I_F The forward LED current at which the forward voltage V_F is specified.
PEAK WAVELENGTH The wavelength of maximum spectral radiation intensity.
FEATURES Additional features of the device.
SCHEMATIC The location of the devices electrical or functional block diagram.
DRAWING Indicates where mechanical/electrical configuration information for the device may be found.

35. LED CHARACTER DISPLAYS

IN ORDER OF: (1) CHAR. HEIGHT (2)NO. CHAR. (3) INTENSITY & (4) TYPE NO.

LINE No.	4 TYPE NUMBER	1 CHAR. HGHT (in)	2 NO. CHAR	3 LUMINOUS INTENSITY Iv MIN (cd)	IF TEST (A)	COLOR	CONN.	DISP NOMEN	PD RATED MAX (W)	IF RATED MAX (A)	TEMP RNGE CODE - +	FORWARD VOLTAGE VF MAX (V)	IF TEST (A)	PEAK WAVE-LENGTH λ p (m)	FEATURES	DRAWINGS SCHE-MATIC	OUTLINE ⊘-RECT |-STRIP *-CHIP
✪			(4)	(5)	(6)		(8)	(9)	(10)	(11)	✪		(13)				✪

(4) * – See drawing for number of character
E – ASCII/64
F – ASCII/128
G – Other

(5) ⊘ – Maximum
△ – Per segment/cell

(6) △ – Per segment/cell
♦ – V_{CC}

(8) CA – Common Anode
CC – Common Cathode
INT – Intelligent Display, segments not externally accessible
UNIV – Universal, non-multiplexed
OTHR – Other, see schematic

(9) 1ST PLACE (LETTER) TYPE
A – Alpha numeric (A to Z plus 0 to 9)
F – Special (Panel Indicator)
G – ASCII
H – Hexadecimal (0 to 9 plus A to F)
N – Numeric (0 to 9)
P – Polarity (±) Single
S – Sensing Indicator (Threshold device)
X – Special Dot Matrix

✪ SYMBOLS AND CODES ON FIRST INTERPRETER PAGE, OE1

Continued on next page

SECTION 35 LED CHARACTER DISPLAYS (CONT'D) SECTION 35

35. LED CHARACTER DISPLAYS

IN ORDER OF: (1) CHAR. HEIGHT (2)NO. CHAR. (3) INTENSITY & (4) TYPE NO.

LINE No.	4 TYPE NUMBER	1 CHAR. HGHT (in)	2 NO. CHAR	3 LUMINOUS INTENSITY Iv MIN (cd)	IF TEST (A)	COLOR	CONN.	DISP NOMEN	PD RATED MAX (W)	IF RATED MAX (A)	TEMP RNGE CODE - +	FORWARD VOLTAGE VF MAX (V)	IF TEST (A)	PEAK WAVE-LENGTH λ p (m)	FEATURES	DRAWINGS SCHE-MATIC	OUTLINE Ø-RECT |-STRIP *-CHIP
✪				(4)	(5)	(6)	(7)	(8)	(9)	(10)	(11)	✪	(13)				✪

(9) 2ND, 3RD & 4TH PLACE (LETTERS) INDICATORS

- B – Both left-and right-hand decimal point
- D – Center or Multiple
- E – Special letters and/or symbols
- H – Status indicator
- L – Left-hand decimal point
- P – Polarity
- R – Right-hand decimal point
- V – Overflow indicator
- K – Colon

APPLICATION

- W – Watch
- C – Clock
- M – Meter
- T – Temp. Indicator

(10)
- † – Typical
- # – Per Character
- △ – Per Segment

(11) * – Per Character

(13)
- † – Typical
- ♦ – Supply voltage at max. LED supply current

✪ **SYMBOLS AND CODES ON FIRST INTERPRETER PAGE, OE1**

SECTION 36 LCD DISPLAYS SECTION 36

INCLUDES: Seven-segment Numeric LCD Display
Segmented Alphanumeric LCD Display
5x7 Dot Matrix LCD Display
Other Configuration LCD Matrix
Bar Graph LCD Display
LCD Display Shutter

TYPE NUMBER	The manufacturer designated device part number.
CHAR HGHT	The character (digit) height in inches.
NO OF CHAR	The total number of characters in the display.
DISPLAY NOMEN	See table below for nomenclature detail.
MAX PWR CONS	The maximum total power consumption of the device.
TEMP RNG CODE	An alpha/numeric code designating the operating ambient temperature range of the device.
OPERATING VOLTAGE MIN VOLT	The minimum power supply voltage at which the devices functional specifications are guaranteed.
OPERATING VOLTAGE MAX VOLT	The maximum power supply voltage at which the devices functional specifications are guaranteed.
FREQ MIN f	The minimum acceptable frequency of the drive source.
FREQ MAX f	The maximum acceptable frequency of the drive source.
CONTRAST RATIO	The brightness of the source minus the brightness of the background divided by the brightness of the background.
RISE TIME t_r	The elapsed time from initial change of state of drive voltage to 90% in visual state.
DECAY TIME	The elapsed time from initial change of state of drive voltage to 10% in visual state.
LIFE	The average operating life expectancy of the device.
COLOR	A numeric code representing the emission color of the device.
FEATURES	Additional features of the device and/or the manufacturing process.
SCHEMATIC	The location of the devices electrical or functional block diagram.
DRAWING	Indicates where mechanical/electrical configuration information for the device may be found.

Continued on next page

INTERPRETER – OPTOELECTRONICS
SYMBOLS AND CODES EXPLAINED

SECTION 36 **LCD DISPLAYS (CONT'D)** **SECTION 36**

36. LCD DISPLAYS

IN ORDER OF: (1) CHAR. HEIGHT (2) No CHAR. (3) PWR CONSUMP & (4)TYPE No.

LINE No.	4 TYPE NUMBER	1 CHAR. HGHT. (in)	2 NO. CHAR	NOMEN	3 MAX. PWR. CONS. Δ-/seg (W)	TEMP RNG. CODE - +	OPERATING VOLTAGE MIN. VOLT (V)	MAX. VOLT (V)	FREQ. MIN. (Hz)	FREQ. MAX. (Hz)	CONTRAST RATIO	RISE TIME tr (s)	DECAY TIME tf (s)	LIFE (hrs)	COL -OR	FEATURES	SCHE-MATIC	DRAWING Ø-RND. Ø-RECT. Δ-STRIP *-CHIP

✪ (4) (5) (6) ✪ (8) (9) (10) (11) (12) ✪ (17) ✪ ✪

(4)
* – See Dwg. for exact number of digits
§ – Bars

(5)
1ST PLACE (LETTER)
TYPE

A – Alpha numeric (A to Z plus 0 to 9)
F – Special (Panel Indicator)
G – ASCII
H – Hexadecimal (0 to 9 plus A to F)
N – Numeric (0 to 9)
P – Polarity (±) Single
S – Sensing Indicator (Theshold device)
X – Special Dot Matrix

2ND, 3RD & 4TH PLACE (LETTERS)
INDICATORS

B – Both left-and right-hand decimal point
D – Center or Multiple
E – Special letters and/or symbols
H – Status indicator
L – Left-hand decimal point

(5)
P – Polarity
R – Right-hand decimal point
V – Overflow indicator
K – Colon

APPLICATION

W – Watch
C – Clock
M – Meter
T – Temp. Indicator

$ – Optional polarizer and/or reflector

(6)
△ – Per segment/cell
† – Typical

(8)
△ – Per segment/cell
† – Typical

(9)
† – Typical
△ – Vrms

(10)
♦ – At specified operating frequency
† – Typical

(11)
† – Typical
$ – Frame Frequency

(12)
Ø – Minimum
† – Typical

(17)
DS – Dynamic Scattering
FE – Field Effect
Ref – Reflective
Trn – Transmissive
Trf – Transflective

✪ **SYMBOLS AND CODES ON FIRST INTERPRETER PAGE, OE1**

SECTION 37 **OTHER TECHNOLOGY DISPLAYS** **SECTION 37**

INCLUDES: Electroluminescent Display
Gas Discharge Display
Incandescent Display
Vacuum Fluorescent Display

TYPE NUMBER	The manufacturer designated device part number.
TYPE OF DISPLAY	The type of illuminating device employed, incandescent, etc.
NO OF CHAR	The number of discrete individual digits the device can drive directly or indirectly.
CHAR HGHT	The character (digit) height in inches.
COLOR	A numeric code representing the emission color of the device.
DC VOLT	The nominal volt required for ionization or average incandescence at a given current.
DC CURR per seg	The per segment current at the given DC voltage.
PD per seg	The nominal power dissipation per segment at the given DC voltage and current.
TEMP RNG CODE	An alpha/numeric code designating the operating ambient temperature range of the device.
RESP TIME	The general term used to describe rise, fall, turn-on, etc., time of an optoelectronic device, if it is understood that the input or output pulse may be radiant flux.

Continued on next page

LUMINANCE Lv The luminous flux solid angle emitted per unit projected area of a source. (Formerly brightness.)
V_{supp} The supply voltage at which the luminance is specified.
LIFE The average operating life expectancy of the device.
MAT The material used in manufacturing the device.
MATERIAL & FEATURES Additional features of the device and/or the manufacturing process.
SCHEMATIC The location of the devices electrical or functional block diagram.
DRAWING Indicates where mechanical/electrical configuration information for the device may be found.

37. OTHER TECHNOLOGY DISPLAYS

IN ORDER OF: (1) TYPE (2) CHAR. HEIGHT (3) No. CHAR. & (4) TYPE NUMBER

LINE No.	4 TYPE NUMBER	1 TYPE OF DIS-PLAY	3 NO. OF CHR ITS	2 CHAR. HGHT. (in)	COL -OR	D.C. VOLT (V)	D.C. CURR per seg (A)	PD per seg	TEMP RNG. CODE - +	RESP TIME (s)	LUMINANCE Lv (fL)	LUMINANCE V SUPP. (V)	LIFE (hrs)	FEATURES	SCHE-MATIC	DRAWING Ø-RND. Ø-RECT. Δ-STRIP *-CHIP

✪ ③ ④ ⑤ ⑥ ✪ ⑦ ⑧ ⑨ ✪ ⑪ ⑫ ⑭ ⑮ ✪

③
ELL – Electroluminescent
GAS – Gas Discharge
INC – Incandescent
LTR – Light reflecting
VFD – Vacuum Fluorescent

④
* – See Dwg. for exact number of digits
♦– No. of characters per line/register. (see features)

⑤
* – Millimeters

⑥
$ – Device emits two or more colors
% – Available in wide range of emission color
* – Clear (colorless nondiffusive) lens
△ – Transparent (colored nondiffusive) lens
§ – Diffusive lens
\# – Milk-white lens
⊠ – Available in wide range of lens color

⑦
* – AC
△ – Peak AC
§ – Peak pulse
\# – Per Segment

⑧
\# – Total current
§ – Peak pulse

⑨
\# – Total power dissipation
⊠ – Max package dissipation

⑪
Ø– Minimum
⊠ – Maximum
△ – Turn on Time
* – Peak duration

⑫
⊠ – Maximum
Ø– Minimum
* – Luminance (nt)
△ – Candelas (Luminous Int)
§ – Illuminance (fc)
$ – Total Radiated flux (lm)

⑭
$ – Number of operations

⑮
Alph – Alphanumeric
Hex – Hexadecimal
Num – Numeric
Pol – Polarity
Seg – Segment

✪ **SYMBOLS AND CODES ON FIRST INTERPRETER PAGE, OE1**

INCLUDES: Fiber Optics:
- Receiver
- Transmitter
- Support

Image Sensor Array
Light Pen
Optoelectronic Controller
Optical Rotary Encoder
Packaged Lamp
Quadrant/Circular Detector
Additional Optoelectronic Devices

TYPE NUMBER The manufacturer designated device part number.
TYPE CODE A numeric code indicating the typical use or function of the device.
MAX PWR DISS The maximum allowable power dissipation resulting from the flow of the respective device forward currents.
VOLT See list of symbols indicating which parameters is given.
CURR See list of symbols indicating which parameters is given.
Pk λp Peak wavelength: The wavelength of maximum spectral radiation intensity.
INTENS Iv The ratio of luminous flux of a source to the solid angle subtended by the detected area and that source. (A spatial flux density measure in LUMENS/STERADIAN = 1 CANDELA.)
TEMP RNG CODE An alpha/numeric code designating the operating ambient temperature range of the device.
DESCRIPTION A brief description of the devices main characteristics and/or parameters.
SCHEMATIC The location of the devices electrical or functional block diagram.
DRAWING Indicates where mechanical/electrical configuration information of the device may be found.

46. MISCELLANEOUS DEVICES

IN ORDER OF: (1) TYPE & (2) TYPE NUMBER

LINE No.	2 TYPE NUMBER	1 TYPE CODE	PARAMETERS ELECTRICAL MAX PWR DISS. (W)	VOLT (V)	CURR. (A)	OPTICAL Pk W/L λp (m)	INTENS. Iv (cd)	TEMP RNG. CODE - +	DESCRIPTION	SCHE-MATIC	DRAWING Ø-RND. ⊠-RECT. Δ-STRIP *-CHIP
✪		(3)	(4)	(5)	(6)	(7)	(8)	✪	(10)	✪	✪

(3)
2 – Fiber optics receiver
3 – Fiber optics transmitter
4 – Fiber optics support
5 – Image sensor array
6 – Light pen
7 – Optoelectronic controller
8 – Optical rotary encoder
9 – Packaged lamp
10 – Quadrant/circular detector
11 – Additional optoelectronic devices (see description)

(4)
† – Typical
♦– Absolute max. power dissipation
* – Power coupled to fiber (emitter or detector) at current in column 6, and at N.A. and fiber diameter in description

(5)
† – Supply Voltage
* – Abs. max. fwd. voltage
♦– Abs. max. supply voltage
△ – Rated output voltage
⊠ – Maximum
Ø– Minimum
– Dielectric rigidity (kV/M)
§ – Reverse Voltage
▼ – Rated input voltage
$ – RMS supply voltage
% – See Description

(6)
† – Supply Current
♦– Abs. max. supply current
△ – Rated output current
⊠ – Maximum
– Minimum
§ – Reverse Voltage
▼ – Rated input current
$ – RMS supply current
* – Emitter current or light current at coupled power
% – See Description

(7)
$ – Upper Band Limit W/L

(8)
$ – Sensitivity (A/W/cm²)
⊠ – Maximum
Ø– Minimum
* – Saturation exposure (WSec/Cm²)
△ – Pk. Radiated power in watts
– Attenuation (dB/Km) at wavelength listed in preceding column
♦– Responsivity (V/W) at λ specified in preceding column
▼ – Responsivity (A/W) at λ specified in preceding column
% – Optical sensitivity (W) at λ specified in preceding column
† – Sensitivity (V/W/Cm²)

(10)
Ø– Minimum
⊠ – Maximum
Fbs – No. of fibers
Rc – Curvature radius
Ln – Length
Aln – Alternate lengths available
NA – Numerical aperture
FDia – Fiber diameter

✪ SYMBOLS AND CODES ON FIRST INTERPRETER PAGE, OE1

DRAWING INDEX

DRAWING INDEX – OPTOELECTRONICS

SCHEMATIC DRAWINGS

DRAWING NO.	PAGE	DRAWING NO.	PAGE	DRAWING NO.	PAGE	DRAWING NO.	PAGE	DRAWING NO.	PAGE	DRAWING NO.	PAGE	DRAWING NO.	PAGE
BE1	240	BF10	247	CB22	253	CE23	259	E141cs	315	E405a-b	311	EC141a-i	343
BE2	240	BF10a	247	CB23	254	CE24	259	E144a-b	277	E410zz	318	EC141zy	368
BE6	240	BF12	248	CB25	254	CE27	260	E146a-g	277	E424a-c	311	EC142	369
BE7	240	BF14	248	CB26	254	CE28	260	E152a	277	E425a	311	EC154a-b	342
BE15	241	BF15	248	CB28	254	CE29	260	E154a-n	277	E506a-c	312	EC161a-b	342
BE16	241	BF16	248	CB30	254	CE30	260	E155a	278	E2012a-c	291	EC164a-e	344
BE16a	241	BF17	248	CB31	254	CE32	260	E161zx	317	E2212a	312	EC165a-b	344
BE18	241	BF18	248	CB32	254	CE33	260	E162a-r	278	E2214a-b	292	EC172a	344
BE22	241	BF19	249	CB34	254	CE34	261	E163a	279	E2315a	292	EC174a-b	344
BE25	241	BF21	249	CB37	254	CE35	261	E164a-r	279	E2414	312	EC181zz	370
BE28	241	BF22	249	CB39	255	CE37	261	E164zz	317	E2416a-e	296	EC188a-b	345
BE29	241	BF23	249	CB40	255	CE38	261	E166a	281	EB103	336	EC189zz	370
BE37	242	BF24	249	CB41	255	CE39	261	E168a	281	EB121zz	335	EC198a-c	345
BE38	241	BF25	249	CB42	255	CE40	261	E178a	281	EB125zz	334	EC199a-c	345
BE39	241	BF26	249	CB44	255	CE41	262	E179a-b	281	EB3816zz	338	EC201a	346
BE40	242	BF27	250	CB45	255	CE42	262	E181a-ac	282	EB155a	321	EC204a	346
BE42	241	BF28	249	CB46	255	CE43	262	E182a-am	284	EB181a	321	EC209	346
BE43	242	BF29	249	CB47	255	CE44	262	E183	286	EB182a	321	EC206a-b	346
BE44	242	BF30	249	CB48	255	CE45	262	E184a-h	287	EB182Ba	321	EC209a	346
BE47	242	BF35	247	CB50	255	CE47	262	E186a	287	EB184a	321	EC211a	346
BE48	242	BF36	247	CB52	253	CE48	262	E187a	287	EB202a	321	EC214zy	341
BE58	242	BF37	247	CB53	255	CE49	262	E188a-c	287	EB243a	321	EC219a-b	346
BE59	242	BF38	247	CB54	256	CE50	262	E189a	287	EB244a	321	EC224zz	372
BE60	242	CA1	251	CB55	256	CE51	263	E194a-c	288	EB248zz	333	EC231a	346
BE62	243	CA2	251	CB56	256	CE52	263	E201a	313	EB278zy	337	EC254	349
BE63	243	CA3	251	CC1	256	CE53	263	E201b	315	EB278zz	337	EC259	349
BE64	243	CA4	251	CC3	256	CE54	263	E202a-p	288	EB341zz	333	EC254zz	376
BE65	243	CA5	251	CC3a-c	256	CE56	263	E204a-l	290	EB364a-f	322	EC265a-b	351
BE69	243	CA6	251	CC4	256	CE57	263	E204zz	316	EB401a	323	EC268a	351
BE70	243	CA6a	251	CC4a-b	256	CE60	264	E205a-b	291	EB403a	323	EC279a-b	353
BE71	243	CA7	251	CC7	256	CE61	264	E208a	291	EB404a-s	324	EC285a	354
BE74	246	CA8	251	CC7a	256	CE62	264	E214a	291	EB405a-d	325	EC302a	355
BE75	246	CA10	251	CC8	256	E002	313	E214zz	319	EB406a	323	EC334a-d	357
BE77	244	CA11	251	CC9	257	E002a	375	E223a	292	EB454a	326	EC337a	357
BE79	244	CA12	251	CC11	256	E004	313	E224a-e	292	EB464a	326	EC338a	358
BE80	244	CA13	251	CC15	256	E004a	313	E228a	292	EB466a-c	326	EC344a-c	358
BE81	244	CA14	252	CC16	256	E032zz	314	E241a	315	EB505a-c	327	EC354a-b	359
BE82	244	CA16	252	CD1	257	E045zz	314	E241b	315	EB506	327	EC376	361
BE83	244	CA17	252	CD2	257	E051zx	314	E242a-e	293	EB526a-b	328	EC355a-b	359
BE85	245	CA18	252	CD3	257	E061a-b	266	E244a-m	293	EB528a	328	EC356a	359
BE86	245	CA19	252	CD4	258	E071zy	314	E245a-d	295	EB528zy	334	EC356zz	372
BE87	244	CA20	252	CD5	258	E081a-e	266	E248a	296	EB528zz	335	EC364a-e	360
BE88	244	CA21	252	CD6	258	E081z	313	E254a-b	297	EB544a-b	329	EC365a-c	360
BE89	244	CA22	252	CD7	258	E081zx	314	E264a-c	297	EB684a	331	EC384a	361
BE90	244	CA23	250	CD8	258	E081zy	314	E274a	298	EB688a-b	331	EC396a	362
BE91	244	CA24	250	CD9	257	E081zz	316	E268a	297	EB787	337	EC397a	362
BE92	244	CA25	250	CD10	258	E082zz	313	E283zz	316	EB1308a	332	EC405a	363
BE93	245	CA27	250	CD11	257	E092a	266	E284a-m	298	EB1432zz	335	EC406a	363
BE94	244	CA28	250	CD12	258	E101a-bv	266	E294a-n	300	EB1440zz	336	EC423a	364
BE95	246	CA28a	250	CD13	257	E101bw	315	E295a	301	EB2616zz	334	EC504a	365
BE96	246	CA29	252	CE3	262	E102a-j	269	E304a-z	301	EB3040zz	333	EC625a	366
BE97	246	CA30	252	CE5	263	E104zz	316	E304zz	318	EB3216zx	338	EC884zz	369
BE98	246	CB1	253	CE6	258	E112a-d	270	EB103	336	EB3216zz	338	EC1316zz	373
BE99	240	CB2	253	CE6a-b	258	E113a	270	EB121zz	335	EB3816zz	338	EC1332zz	373
BE100	240	CB2a-b	253	CE12	259	E121a-d	270	EB125zz	334	EB6816zy	339	EC1810zy	371
BE101	240	CB4	253	CE14	259	E122a	270	E324a-b	305	EB6816zz	339	EC1810zz	370
BE102	240	CB5	253	CE15	259	E123a-g	270	E334a-b	305	EC8a-b	341	EC1816zy	371
BE103	242	CB6	253	CE16	259	E124a-km	270	E344k-x	305	EC081a-d	342	EC1816zz	370
BE104	243	CB12	253	CE17	259	E135a	271	E354a-f	307	EC091a-b	342	EC2210a-c	347
BE105	243	CB13	253	CE18	259	E141a-cr	271	E364a-f	308	EC102a-b	342	EC2211a	347
BF3	247	CB14	253	CE19	259	E141cv	313	E365a	309	EC121a	343	EC2212a-b	347
BF5	247	CB17	253	CE21	259	E141cu	313	E374a-i	309	EC122a	343	EC2310a	347
BF8	248	CB21	253	CE22	259	E141ct	314	E404a-c	310	EC141	343	EC2413a	348

SCHEMATIC DRAWINGS

DRAWING NO.	PAGE	DRAWING NO.	PAGE	DRAWING NO.	PAGE	DRAWING NO.	PAGE	DRAWING NO.	PAGE	DRAWING NO.	PAGE	DRAWING NO.	PAGE
EC2510a-b	350	EC5616zz	378	FA14	384	FA59a-c	388	FB67	393	FB133	400	FB172	407
EC2511a-b	349	EC5820zz	378	FA15	385	FA61	388	FB68	394	FB134	400	FB173	407
EC2512a	349	EC7032zz	381	FA15a	385	FA63	388	FB74	394	FB137	405	FB174	408
EC2610a-d	352	EC7840zz	379	FA16	385	FA64	388	FB75	394	FB138	398	FB175	408
EC2610zz	369	EC8826zz	380	FA18	385	FA65	389	FB76	394	FB139	401	FB176	408
EC2611a	351	EC9232zz	381	FA18a-b	385	FA66	389	FB79	394	FB140	402	FB177	408
EC2612a	351	EC9432zz	375	FA20	385	FA67	389	FB80	394	FB141	402	FB178	408
EC2810a-b	353	EC10240zx	381	FA20a-c	385	FA68	389	FB81	394	FB142	402	FB179	395
EC2810zz	377	EC10420a	366	FA22	385	FA69	389	FB82	394	FB143	402	FB180	409
EC2812a-c	354	EC11680z	376	FA23	385	FA69a-b	389	FB83	394	FB144	402	FB182	396
EC2812zz	382	EC13220a	367	FA23a-d	385	FA70	389	FB84	394	FB145	402	FB183	409
EC2813zz	369	EC14260z	377	FA24	385	FA72	389	FB85	395	FB146	402	FB184	409
EC2848a	354	EC14620z	374	FA31	385	FA73	389	FB86	395	FB147	403	FB185	409
EC2912zz	377	ED2-1	382	FA32	386	FA75	390	FB88	395	FB148	403	FB196	410
EC3011a	355	ED2-2	382	FA33	386	FA76	386	FB89	395	FB149	403	FB197	410
EC3012a-c	355	ED2-3	382	FA34	386	FA78	389	FB90	395	FB150	403	FB198	412
EC3214a	356	ED3-1	383	FA35	386	FB1	391	FB93	396	FB151	404	FB200	411
EC3312zz	378	ED4-1	383	FA36	386	FB4	391	FB98	396	FB152	404	FB201	413
EC3313a	357	ED5-1	383	FA37	386	FB5	391	FB99	396	FB153	405	FB202	414
EC3316a	356	ED6-1	383	FA38	386	FB7	391	FB101	396	FB154	405	FB203	414
EC3316zz	382	ED7	383	FA41	387	FB11	391	FB102	396	FB155	405	FB204	400
EC3324zw	380	ED8	383	FA42	387	FB24	393	FB103	396	FB156	405	FB205	411
EC3324zx	379	ED9	383	FA43	387	FB24a-c	393	FB104	396	FB157	405	FB206	414
EC3324zy	379	FA2	384	FA44	387	FB32	393	FB108	396	FB158	406	FB207	413
EC3324zz	374	FA2a-g	384	FA45	387	FB40	394	FB109	397	FB159	406	FB209	414
EC3416a	358	FA3	384	FA46	387	FB41	394	FB110	398	FB160	406	FB211	401
EC3418a	358	FA3a-f	384	FA47	387	FB42	392	FB112	397	FB161	406	FB212	401
EC3716a	361	FA4	384	FA48	387	FB43	392	FB113	397	FB162	406	FB213	412
EC3820a	361	FA6	384	FA49	387	FB44	392	FB114	397	FB164	406		
EC4040zz	372	FA8	384	FA51	385	FB48	392	FB119	398	FB165	406		
EC4012a	363	FA8a	384	FA52	388	FB49	392	FB123	398	FB166	406		
EC4211a	364	FA9	384	FA53	386	FB52	393	FB125	397	FB167	407		
EC4220a	364	FA10	384	FA55	388	FB54	393	FB128	398	FB168	407		
EC4811zz	375	FA11	384	FA57	388	FB55	393	FB129	399	FB169	407		
EC4932a	365	FA12	384	FA58	388	FB56	393	FB131	399	FB170	407		
EC5316zz	368	FA13	384	FA59	388	FB63	393	FB132	399	FB171	407		

DRAWING INDEX – OPTOELECTRONICS

OUTLINE DRAWINGS

DRAWING NO.	PAGE	DRAWING NO.	PAGE	DRAWING NO.	PAGE	DRAWING NO.	PAGE	DRAWING NO.	PAGE	DRAWING NO.	PAGE	DRAWING NO.	PAGE
MO001	415	PA81	425	PA150	440	PC48	448	PD28	454	PD105	462	PD201a-b	469
MP1509	564	PA82	427	PA151	440	PC48a	448	PD28b-u	454	PD106	462	PD202	469
PA7	416	PA83	426	PA152	440	PC52	448	PD29	454	PD106a	462	PD202a	469
PA7a	416	PA84	425	PA153	440	PC52a-b	448	PD29a	454	PD108	462	PD203	469
PA11	416	PA86	426	PA154	440	PC53	448	PD30	455	PD108a-d	462	PD203a	469
PA12	417	PA87	426	PA155	441	PC55a-f	448	PD31	455	PD109	462	PD206	470
PA13	417	PA88	428	PA156	441	PC58	449	PD32	455	PD109a-e	462	PD208	470
PA18	417	PA89	428	PA157	442	PC60	449	PD33	455	PD114	463	PD209	470
PA18a-k	417	PA90	428	PA158	442	PC60a-b	449	PD33a-l	455	PD114a-b	463	PD211	470
PA23	418	PA91	428	PA159	443	PC63	449	PD36	455	PD115	463	PD212	470
PA26	418	PA92	429	PA160	443	PC64	449	PD36a-c	455	PD116	463	PD214	470
PA26a	418	PA93	429	PA161	443	PC65	449	PD38	456	PD118	463	PD215	470
PA27	418	PA94	429	PA162	443	PC65a-b	449	PD39	456	PD118a-g	463	PD232	471
PA28	418	PA95	429	PA163	443	PC66	449	PD41	465	PD120	463	PD232a-k	471
PA28a	418	PA96	429	PA163a	443	PC67	449	PD42	499	PD120a-e	463	PD235	471
PA29	418	PA97	429	PA164	443	PC68	450	PD42a-ab	499	PD123	464	PD236	471
PA29a	418	PA98	430	PA165	443	PC68a-b	450	PD43	456	PD126	461	PD237	471
PA33	418	PA99	430	PA166	443	PC69	450	PD44	456	PD127	461	PD238	471
PA34	418	PA100	429	PA167	444	PC70	450	PD47	457	PD128	462	PD239	471
PA35	418	PA101	430	PA168	444	PC71	450	PD47a-c	457	PD130	464	PD256	471
PA36	418	PA102	430	PA169	444	PC72	450	PD49	457	PD138	465	PD257	472
PA37	419	PA103	431	PA170	444	PC73	450	PD50	457	PD138a	465	PD257a-g	472
PA38	419	PA104	431	PA171	444	PC74	450	PD50a-aa	457	PD142	465	PD258	472
PA41	419	PA105	431	PA172	444	PC75	451	PD52	457	PD144	465	PD258a-c	472
PA42	419	PA106	431	PA173	444	PC75a	451	PD52a-c	457	PD144d-h	465	PD262	472
PA42a-b	419	PA107	432	PA174	444	PC76	451	PD54	457	PD145	465	PD262a-o	472
PA44	419	PA108	432	PA175	431	PC76a	451	PD55	457	PD146	465	PD264	472
PA44a-e	419	PA109	432	PA176	445	PC77	451	PD56	458	PD146a-c	465	PD264a-b	472
PA47	420	PA110	432	PA177	445	PC78	451	PD56a-c	458	PD160	466	PD265	473
PA47a-s	420	PA111	432	PC1	446	PC79	451	PD58	458	PD160a-k	466	PD265a-h	473
PA48	420	PA112	433	PC1a-b	446	PC80	451	PD59	458	PD161	466	PD266	473
PA48a-c	420	PA113	433	PC2	446	PC81	451	PD61	458	PD161a-d	466	PD266a	473
PA50	420	PA114	432	PC2a	446	PC81a-b	451	PD62	458	PD162	466	PD271	473
PA51	420	PA116	433	PC3	446	PC82	451	PD62c	458	PD165	466	PD272	473
PA52	421	PA117	433	PC3a-b	446	PD5	451	PD63	458	PD165a-f	466	PD273	473
PA53	421	PA118	434	PC4	446	PD5d	451	PD66	458	PD166	466	PD274	473
PA54	421	PA119	434	PC4a	446	PD7	464	PD66a-b	458	PD166a-d	466	PD275	473
PA55	421	PA120	434	PC5	446	PD7a-z	464	PD67	459	PD167	466	PD278	474
PA56	421	PA121	435	PC5a	446	PD8	452	PD67a-b	459	PD168	467	PD278a-c	474
PA57	421	PA122	435	PC8	446	PD8a-aa	452	PD68	459	PD168a	467	PD279	474
PA58	421	PA123	435	PC8a	446	PD12	452	PD68a-d	459	PD169	467	PD279a-c	474
PA59	422	PA124	435	PC9	446	PD12c-y	452	PD69	459	PD169a-n	467	PD280	474
PA61	422	PA125	436	PC10	446	PD13	452	PD77	459	PD171	467	PD280a-l	474
PA62	422	PA126	436	PC11	446	PD13b-d	452	PD77a-r	459	PD171a-c	467	PD281	474
PA63	422	PA127	436	PC13	446	PD14	452	PD78	459	PD172	467	PD283	474
PA63a	422	PA128	437	PC14	447	PD14a-q	452	PD81	460	PD172a	467	PD283a	474
PA64	423	PA129	436	PC15	447	PD15	453	PD84	460	PD174	467	PD284	474
PA65	423	PA131	437	PC15a-b	447	PD15c-e	453	PD84a	460	PD177	467	PD284a-e	474
PA66	424	PA132	437	PC17	447	PD16	453	PD85	460	PD180	467	PD285	474
PA67	424	PA133	438	PC17a	447	PD16a-ar	453	PD85a-c	460	PD180a-b	467	PD286	474
PA68	424	PA135	438	PC21	447	PD18	453	PD86	460	PD182	468	PD288	474
PA69	424	PA136	438	PC21a	447	PD18a-f	453	PD89	461	PD183	468	PD292	475
PA70	423	PA137	438	PC39	447	PD19	453	PD89a-h	461	PD183a-c	468	PD294	475
PA71	424	PA138	439	PC39a-d	447	PD21	454	PD90	461	PD184	468	PD295	475
PA72	424	PA139	439	PC40	447	PD21b	454	PD90a-c	461	PD184a-b	468	PD296	475
PA73	423	PA140	439	PC40a-b	447	PD22	454	PD92	461	PD187	468	PD297	475
PA74	423	PA141	439	PC41	447	PD22b-h	454	PD92a	461	PD189	469	PD298	475
PA75	423	PA143	440	PC42	447	PD23	454	PD93	461	PD197	469	PD298a-b	475
PA76	424	PA144	440	PC45	448	PD25	454	PD95	461	PD199	469	PD299	475
PA77	424	PA146	440	PC46	448	PD25a-h	454	PD96	461	PD199a-c	469	PD299a	475
PA78	424	PA147	440	PC46a	448	PD26	454	PD96a-b	461	PD200	469	PD300	475
PA79	425	PA148	440	PC47	448	PD27	454	PD100	462	PD200a	469	PD300a-b	475
PA80	430	PA149	440	PC47a	448	PD27b-g	454	PD100a-d	462	PD201	469	PD301	475

OUTLINE DRAWINGS

DRAWING NO.	PAGE	DRAWING NO.	PAGE	DRAWING NO.	PAGE	DRAWING NO.	PAGE	DRAWING NO.	PAGE	DRAWING NO.	PAGE	DRAWING NO.	PAGE
PD301a-d	475	PD400	483	PD504	493	PD913	502	PD1005	513	PD1068	524	PD1144	534
PD302	476	PD400a	483	PD507	493	PD914	502	PD1005a	513	PD1069	524	PD1145	535
PD303	476	PD405	484	PD511	493	PD914a	502	PD1006	513	PD1070	524	PD1146	535
PD307	476	PD411	484	PD513	493	PD915	502	PD1007	513	PD1071	524	PD1146a	535
PD308	476	PD411a	484	PD515	494	PD917	503	PD1008	513	PD1072	525	PD1147	535
PD308a	476	PD412	484	PD517	494	PD919	503	PD1009	514	PD1073	525	PD1147a	535
PD310	476	PD412a	484	PD520	494	PD922	503	PD1010	514	PD1074	525	PD1148	535
PD312	476	PD413	484	PD525	494	PD922a	503	PD1013	514	PD1075	525	PD1150	535
PD312a	476	PD413a	484	PD526	494	PD925	503	PD1014	514	PD1076	525	PD1151	536
PD319	476	PD417	484	PD530	494	PD926	497	PD1015	514	PD1077	525	PD1152	536
PD320	476	PD418	485	PD535	494	PD927	486	PD1016	529	PD1078	526	PD1154	536
PD322	477	PD418a-b	485	PD540	495	PD928	503	PD1017	515	PD1079	526	PD1155	536
PD322a-c	477	PD420	485	PD542	495	PD929	503	PD1017a-e	515	PD1080	526	PD1156	536
PD323	477	PD422	485	PD542a	495	PD932	504	PD1018	515	PD1081	526	PD1156a-b	536
PD327	477	PD422a	485	PD544	495	PD932a	504	PD1019	505	PD1082	527	PD1157	537
PD328	477	PD424	485	PD546	495	PD933	504	PD1020	515	PD1083	527	PD1158	537
PD329	477	PD425	485	PD546a	495	PD934	504	PD1021	515	PD1084	527	PD1159	537
PD330	477	PD426	486	PD547	495	PD935	504	PD1022	516	PD1085	528	PD1159a	537
PD331	478	PD427	486	PD548	495	PD940	505	PD1023	516	PD1086	528	PD1160	537
PD332	478	PD431	486	PD550	496	PD941	505	PD1024	516	PD1087	529	PD1161	537
PD333	478	PD431a-b	486	PD550a-b	496	PD942	506	PD1025	516	PD1088	529	PD1162	537
PD333a	478	PD433	486	PD551	496	PD943	506	PD1027	516	PD1089	530	PD1163	537
PD334	478	PD436	487	PD552	496	PD944	506	PD1029	517	PD1090	530	PD1164	537
PD334a	478	PD438	487	PD553	496	PD945	506	PD1030	517	PD1091	530	PD1165	537
PD335	478	PD439	487	PD554	496	PD946	506	PD1031	517	PD1092	531	PD1166	537
PD337	478	PD439a	487	PD557	494	PD947	507	PD1032	517	PD1093	531	PD1167	537
PD342	476	PD445	487	PD557a-c	494	PD948	507	PD1033	517	PD1094	531	PD1168	538
PD354	477	PD446	487	PD558	490	PD948a	507	PD1034	517	PD1095	531	PD1169	538
PD355	475	PD447	488	PD559	491	PD949	507	PD1035	517	PD1096	531	PD1170	538
PD356	479	PD451	488	PD562	497	PD951	507	PD1036	518	PD1097	531	PD1171	538
PD357	479	PD452	488	PD567	497	PD952	508	PD1036a	518	PD1098	531	PD1172	538
PD358	479	PD455	488	PD568	497	PD953	508	PD1037	518	PD1098a	531	PD1173	538
PD359	479	PD457	488	PD568a-b	497	PD955	508	PD1038	518	PD1099	531	PD1174	539
PD360	479	PD458	488	PD570	497	PD956	509	PD1040	519	PD1101	541	PD1175	539
PD361	480	PD459	488	PD574	497	PD957	509	PD1041	519	PD1102	541	PD1176	539
PD361a-g	480	PD461	488	PD586	456	PD958	509	PD1042	519	PD1103	541	PD1177	539
PD362	480	PD462	489	PD586a	456	PD959	509	PD1043	519	PD1104	541	PD1178	539
PD364	480	PD463	489	PD588	498	PD960	515	PD1044	520	PD1105	541	PD1179	539
PD369	480	PD463a-b	489	PD589	498	PD969	510	PD1045	520	PD1106	541	PD1180	539
PD371	481	PD467	489	PD607	498	PD970	510	PD1046	520	PD1107	542	PD1181	539
PD374	481	PD468	489	PD608	498	PD971	510	PD1047	520	PD1108	531	PD1181a	539
PD374a-b	481	PD469	489	PD608a-c	498	PD974	510	PD1047a	520	PD1109	531	PD1182	539
PD375	481	PD470	490	PD609	499	PD975	508	PD1048	521	PD1110	531	PD1183	539
PD375a-b	481	PD471	490	PD611	499	PD979	510	PD1050	521	PD1111	532	PD1184	540
PD377	482	PD473	490	PD612	499	PD982	510	PD1051	521	PD1112	532	PD1185	540
PD379	482	PD474	490	PD613	493	PD990	510	PD1051a	521	PD1113	532	PD1186	540
PD380	482	PD478	490	PD624	489	PD990a-e	510	PD1053	521	PD1116	531	PD1187	540
PD380a	482	PD479	490	PD625	481	PD991	511	PD1053a	521	PD1117	532	PD1188	540
PD381	482	PD484	491	PD627	500	PD991a-e	511	PD1054	522	PD1118	532	PD1189	542
PD382	482	PD484a-c	491	PD628	500	PD992	511	PD1055	522	PD1119	532	PD1190	542
PD383	482	PD487	491	PD629	500	PD993	511	PD1056	522	PD1120	533	PD1191	542
PD383a	482	PD489a-d	491	PD630	500	PD994	511	PD1056a	522	PD1121	533	PD1192	542
PD386	483	PD490	492	PD631	500	PD995	511	PD1057	522	PD1122	533	PD1193	542
PD392	483	PD490a-b	492	PD902	501	PD996	511	PD1057a-d	522	PD1135	533	PD1194	542
PD393	483	PD493	492	PD903	501	PD997	512	PD1058	522	PD1136	533	PD1195	542
PD394	483	PD494	492	PD904	501	PD997a-e	512	PD1059	522	PD1137	533	PD1196	543
PD394a	483	PD495	492	PD905	501	PD998	512	PD1060	522	PD1137a	533	PD1197	543
PD395	483	PD497	492	PD906	501	PD1000	512	PD1061	522	PD1138	534	PD1198	540
PD395a	483	PD498	492	PD907	501	PD1001	512	PD1062	523	PD1139	534	PD1199	543
PD398	483	PD500	493	PD908	501	PD1002	512	PD1062a	523	PD1140	534	PD1200	543
PD398a-h	483	PD501	493	PD909	502	PD1002a	512	PD1063	523	PD1141	534	PD1201	543
PD399	483	PD502	493	PD909a-d	502	PD1003	513	PD1065	523	PD1142	534	PD1202	543
PD399a-c	483	PD503	493	PD912	502	PD1004	513	PD1066	524	PD1143	534	PD1203	543

DRAWING INDEX – OPTOELECTRONICS

OUTLINE DRAWINGS

DRAWING NO.	PAGE	DRAWING NO.	PAGE	DRAWING NO.	PAGE	DRAWING NO.	PAGE	DRAWING NO.	PAGE	DRAWING NO.	PAGE	DRAWING NO.	PAGE
PD1204	544	PD1264	553	PD1316	562	PD1384	573	PH20	582	PH103	590	PH303	599
PD1205	543	PD1265	553	PD1317	562	PD1385	576	PH20a	582	PH104	590	PH303a	599
PD1206	544	PD1266	554	PD1318	562	PD1386	576	PH21	583	PH105	590	PH305	599
PD1207	544	PD1267	554	PD1319	562	PD1387	576	PH21a-b	583	PH106	590	PH306	599
PD1208	544	PD1268	554	PD1320	563	PD1388	576	PH22	583	PH107	590	PH307	599
PD1209	544	PD1269	554	PD1321	563	PD1389	577	PH23	583	PH110	590	PH308	599
PD1210	545	PD1270	554	PD1322	563	PD1390	577	PH23a-f	583	PH110a	590	PH309	600
PD1210a-g	545	PD1271	554	PD1323	563	PD1391	577	PH24	583	PH111	590	PH310	600
PD1211	545	PD1272	554	PD1324	563	PD1392	577	PH25	583	PH112	591	PH311	600
PD1212	545	PD1273	554	PD1324a	563	PD1393	577	PH27	583	PH113	591	PH312	601
PD1213	546	PD1274	555	PD1325	563	PD1394	577	PH30	583	PH116	591	PH313	601
PD1213a-b	546	PD1275	555	PD1326	564	PD1395	578	PH30a	583	PH116a-c	591	PH314	601
PD1214	546	PD1276	555	PD1326a	564	PD1396	578	PH31	583	PH117	592	PH315	601
PD1215	546	PD1277	555	PD1327	564	PD1397	578	PH31a-c	583	PH118	591	PH316	601
PD1216	546	PD1278	555	PD1328	564	PD1398	578	PH33	582	PH123	572	PH317	601
PD1217	546	PD1279	555	PD1329	564	PD1399	578	PH33a-b	582	PH123a-b	572	PH318	601
PD1218	546	PD1280	555	PD1330	565	PD1400	575	PH37	584	PH128	595	PH319	600
PD1219	547	PD1280a	555	PD1331	565	PD1401	575	PH38	584	PH129	592	PH320	607
PD1220	547	PD1281	555	PD1332	565	PD1402	578	PH39	584	PH129a-b	592	PH321	602
PD1221	547	PD1281a	555	PD1333	565	PD1403	578	PH47	584	PH135	592	PH322	608
PD1222	547	PD1282	556	PD1334	567	PD1404	578	PH47a	584	PH136	592	PH323	602
PD1223	547	PD1282a	556	PD1335	567	PD1405	579	PH48	584	PH139	592	PH324	602
PD1224	547	PD1283	556	PD1336	567	PD1406	579	PH48a-b	584	PH139a	592	PH328	600
PD1225	547	PD1284	556	PD1338	567	PD1407	579	PH50	584	PH140	592	PH329	603
PD1226	547	PD1285	556	PD1339	567	PD1408	579	PH50a-e	584	PH141	593	PH330	602
PD1227	548	PD1286	557	PD1340	568	PD1409	579	PH51	585	PH144	593	PH331	603
PD1228	548	PD1287	556	PD1340a	568	PD1410	579	PH54	585	PH149	593	PH332	603
PD1229	548	PD1288	557	PD1341	568	PD1411	579	PH55	585	PH150	593	PH333	603
PD1230	548	PD1289	558	PD1341a	568	PD1412	579	PH56	585	PH154	594	PH334	603
PD1231	548	PD1289a	558	PD1343	568	PD1413	580	PH56a-i	585	PH155	594	PH334a	603
PD1232	548	PD1289b	558	PD1348	568	PD1414	579	PH58	585	PH157	594	PH335	604
PD1233	548	PD1290	557	PD1349	569	PD1415	579	PH58a-e	585	PH157a	594	PH336	604
PD1234	544	PD1291	558	PD1350	569	PD1416	580	PH62	586	PH158	594	PH337	605
PD1235	549	PD1292	558	PD1351	569	PD1417	580	PH64	586	PH159	594	PH338	604
PD1236	549	PD1293	559	PD1352	569	PD1418	580	PH64a-b	586	PH161	594	PH339	605
PD1237	549	PD1293a-r	559	PD1353	569	PD1419	580	PH65	586	PH162	595	PH340	605
PD1239	549	PD1294	559	PD1354	569	PD1420	580	PH67	586	PH164	595	PH341	605
PD1240	549	PD1295	560	PD1355	569	PD1421	580	PH67a-b	586	PH165	595	PH342	606
PD1241	550	PD1296	559	PD1356	570	PD1422	580	PH68	586	PH166	595	PH343	606
PD1242	550	PD1297	559	PD1357	570	PD1423	572	PH69	586	PH169	595	PH344	607
PD1243	550	PD1298	559	PD1360	570	PD1424	572	PH70	587	PH172	595	PH345	607
PD1244	550	PD1299	559	PD1361	570	PH1	581	PH71	587	PH175	596	PH345a	607
PD1245	551	PD1299a	559	PD1362	570	PH3	581	PH72	587	PH176	596	PH346	607
PD1246	551	PD1300	560	PD1363	571	PH6	581	PH72a	587	PH269	596	PH347	607
PD1246a-d	551	PD1300a-b	560	PD1364	571	PH8	581	PH74	587	PH277	596	PH348	608
PD1247	551	PD1301	560	PD1365	571	PH9	581	PH76	587	PH278	596	PH349	609
PD1247a-e	551	PD1302	560	PD1366	571	PH9a-c	581	PH81	588	PH278a	596	PH350	609
PD1248	551	PD1302a	560	PD1367	572	PH11	584	PH82	588	PH279	596	PH351	610
PD1249	551	PD1303	559	PD1368	572	PH11a-e	584	PH83	588	PH281	593	PH352	610
PD1250	551	PD1304	561	PD1369	566	PH12	581	PH86	588	PH281a	593	PH353	611
PD1251	552	PD1305	560	PD1370	566	PH12a-d	581	PH89	588	PH285	591	PH354	611
PD1252	552	PD1306	561	PD1372	470	PH13	581	PH90	589	PH286	586	PH355	610
PD1253	552	PD1307	561	PD1373a-b	374	PH13a-d	581	PH91	589	PH287	585	PH356	610
PD1254	552	PD1308	561	PD1374	374	PH14	582	PH92	589	PH290	597	PH357	610
PD1255	552	PD1309	561	PD1375	374	PH14a	582	PH93	589	PH291	597	PH358	610
PD1256	552	PD1309a	561	PD1376	374	PH16	606	PH94	589	PH291a	597	PH359	610
PD1257	552	PD1310	561	PD1377	374	PH16a-ap	606	PH95	589	PH292	597	PH360	612
PD1258	552	PD1311	561	PD1378	575	PH17	582	PH96	589	PH293	597	PH361	612
PD1259	553	PD1312	562	PD1379	575	PH17a-q	582	PH96a	589	PH295	598	PH362	612
PD1260	553	PD1312a	562	PD1380	575	PH18	582	PH100	590	PH296	598	PH363	612
PD1261	553	PD1313	562	PD1381	575	PH18a	582	PH100a	590	PH299	598	PH364	611
PD1262	553	PD1314	562	PD1382	575	PH19	582	PH101	590	PH299a	598	PS1	613
PD1263	553	PD1315	562	PD1383	573	PH19a-b	582	PH102	590	PH302	598	PS1a	613

OUTLINE DRAWINGS

DRAWING NO.	PAGE	DRAWING NO.	PAGE	DRAWING NO.	PAGE	DRAWING NO.	PAGE	DRAWING NO.	PAGE	DRAWING NO.	PAGE	DRAWING NO.	PAGE
PS2	613	PS116	623	PS232	633	PS332	643	PS390a-b	661	PS456	674	PT50	686
PS2a	613	PS117	623	PS233	633	PS333	649	PS391	660	PS457	674	PT51	686
PS3	613	PS117a-c	623	PS234	633	PS334	649	PS391a	660	PS458	674	PT54	686
PS3a	613	PS120	623	PS238	634	PS335	649	PS392	661	PS459	675	PT56	686
PS4	613	PS120a-b	623	PS240	634	PS336	649	PS398	661	PS460	675	PT56b	686
PS4a-g	613	PS121	623	PS242	634	PS337	650	PS399	661	PS461	676	PT60	686
PS5	613	PS121a-e	623	PS243	634	PS338	650	PS400	661	PS462	675	PT60a	686
PS5a-b	613	PS123	623	PS244	634	PS339	651	PS401	661	PS463	676	PT63	686
PS7	613	PS124	623	PS244a-g	634	PS340	651	PS402	661	PS464	676	PT66	686
PS8	614	PS132	624	PS247	635	PS341	651	PS403	661	PS465	677	PT69	686
PS9	614	PS132a-i	624	PS247a	635	PS342	651	PS404	661	PS466	676	PT71	686
PS10	614	PS133	619	PS248	635	PS343	652	PS405	661	PS467	679	PT72	686
PS11	614	PS137	624	PS249	635	PS344	652	PS406	662	PS468	680	PT76	686
PS12	614	PS138	624	PS250	635	PS345	652	PS407	662	PS469	678	PT77	687
PS12a	614	PS139	624	PS253	635	PS346	652	PS408	662	PS470	677	PT78	687
PS13	614	PS139a-b	624	PS254	636	PS347	652	PS409	662	PS471	681	PT82	687
PS14	614	PS140	624	PS255	636	PS348	652	PS410	662	PS472	682	PT83	687
PS15	614	PS141	624	PS256	636	PS349	653	PS411	662	PS743	682	PT84	687
PS17	615	PS142	625	PS257	636	PS351	653	PS412	662	PS474	681	PT89	687
PS19	615	PS144	625	PS260	636	PS354	653	PS414	662	PS475	681	PT89a-c	687
PS21	615	PS148	625	PS265	637	PS355	653	PS415	663	PS476	682	PT93	687
PS22	615	PS149	626	PS266	637	PS356	653	PS416	663	PS477	682	PT97	686
PS23	615	PS151	626	PS269	637	PS357	654	PS417	663	PS478	682	PT99	687
PS26	615	PS152	626	PS270	637	PS358	654	PS417a	663	PS479	681	PT100	684
PS28	616	PS152a-b	626	PS272	638	PS359	654	PS418	663	PS480	669	PT101	688
PS28a	616	PS153	627	PS273	638	PS360	654	PS419	664	PS481	682	PT105	687
PS29	616	PS154	627	PS275	638	PS361	655	PS421	664	PT1	683	PT109	688
PS31	616	PS154a-b	627	PS277	638	PS362	655	PS422	664	PT2	683	PT110	688
PS34	616	PS161	627	PS280	639	PS363	655	PS424	664	PT2a-ae	683	PT111	688
PS35a-e	616	PS163	627	PS281	639	PS365	655	PS424a	664	PT4	683	PT113	688
PS37	617	PS164	627	PS282	639	PS366	656	PS425	665	PT5	683	PT122	693
PS40	617	PS176	626	PS286	643	PS366a	656	PS426	664	PT6	683	PT124	689
PS40a	617	PS178	627	PS289	642	PS367	656	PS428	665	PT6a-h	683	PT125	689
PS44	617	PS183	628	PS290	643	PS368	656	PS429	665	PT9	683	PT127	690
PS47	617	PS184	628	PS291	640	PS368a-b	656	PS430	665	PT9a-c	683	PT128	689
PS48	617	PS185	669	PS293	640	PS369	657	PS431	665	PT11	684	PT129	690
PS52	615	PS186	631	PS293a-b	640	PS370	669	PS432	666	PT14	684	PT130	690
PS56	618	PS189	631	PS295	640	PS371	669	PS432a-c	666	PT14a-e	684	PT131	690
PS57	618	PS192	629	PS296	640	PS372	669	PS433	666	PT15	684	PT133	691
PS65	618	PS193	629	PS297	641	PS373	670	PS433a-c	666	PT18	684	PT134	691
PS68	618	PS194	629	PS298	641	PS374	669	PS434	666	PT18a-n	684	PT135	691
PS74	618	PS196	629	PS299	641	PS375	657	PS434a-c	666	PT21	684	PT136	691
PS82	619	PS197	630	PS303	643	PS376	658	PS435	666	PT21a-d	684	PT137	691
PS82a	619	PS197a-d	630	PS304	642	PS377	657	PS435a-c	666	PT23	684	PT138	691
PS85	619	PD200	630	PS306	642	PS377a	657	PS436	667	PT23a	684	PT139	691
PS93	620	PS204	630	PS307	642	PS377b-c	657	PS437	667	PT27	685	PT140	691
PS93a-b	620	PS205	630	PS308	644	PS378	658	PS438	667	PT30	685	PT141	691
PS94	620	PS205a	630	PS308a-c	644	PS379	658	PS439	668	PT31	685	PT142	692
PS95	620	PS206	630	PS309	644	PS380	659	PS440	668	PT31a-c	685	PT142a	692
PS95a	620	PS207	631	PS311	644	PS380a-c	659	PS441	667	PT32	685	PT143	692
PS96	620	PS211	637	PS311a-d	644	PS381	659	PS442	667	PT32r	685	PT144	692
PS99	620	PS215	631	PS316	645	PS382	660	PS443	667	PT34	685	PT145	692
PS104	621	PS216	631	PS317	645	PS382a	660	PS444	668	PT34a-f	685	PT146	692
PS105	621	PS217	632	PS317a-b	645	PS383	659	PS445	668	PT36	685	PT147	692
PS106	621	PS218	632	PS318	646	PS384	658	PS447	670	PT36a-c	685	PT148	692
PS108	622	PS218a-h	632	PS318a-c	646	PS385	658	PS448	670	PT38	685	PT149	691
PS110	622	PS219	632	PS319	647	PS386	658	PS449	671	PT38a	685	PT149a	691
PS111	622	PS220	632	PS320	647	PS387	657	PD450	671	PT39	685	PT151	693
PS112	622	PS221	632	PS321	648	PS387a	657	PS451	671	PT39a	685	PT152	693
PS113	622	PS222	632	PS322	648	PS388	660	PS452	671	PT46	685	PT153	694
PS114	622	PS224	633	PS323	648	PS389	660	PS453	672	PT46b	685	PT154	694
PS114a-e	622	PS225	633	PS325a-b	648	PS389a	660	PS454	673	PT47	685	PT155	694
PS115	623	PS226	633	PS326	653	PS390	661	PS455	674	PT47a-e	685	PT156	694

DRAWING INDEX – OPTOELECTRONICS

OUTLINE DRAWINGS

DRAWING NO.	PAGE	DRAWING NO.	PAGE	DRAWING NO.	PAGE	DRAWING NO.	PAGE	DRAWING NO.	PAGE	DRAWING NO.	PAGE	DRAWING NO.	PAGE
PT157	694	PV68	699	PV174a-d	707	PY63	720	PY272	730	PY488	744	PY590	759
PT158	694	PV68a-b	699	PV175	708	PY63a-b	720	PY273	730	PY492	744	PY590a-d	759
PT159	694	PV69	699	PV175a	708	PY64	720	PY273a	730	PY493	745	PY591	759
PV1	695	PV69a-b	699	PV176	708	PY64a-s	720	PY274	730	PY500	745	PY591a	759
PV1a-ca	695	PV71	699	PV176a-e	708	PY67	721	PY274a	730	PY501	745	PY592	760
PV2	695	PV73	699	PV177	708	PY67a	721	PY275	730	PY503	746	PY593	760
PV2a	695	PV73a-d	699	PV177a-d	708	PY79	721	PY276	730	PY505	746	PY593a	760
PV3	695	PV74	699	PV178	708	PY104	721	PY277	730	PY505a-d	746	PY594	760
PV3a-b	695	PV75	699	PV178a-b	708	PY104a-b	721	PY278	730	PY507	747	PY594a	760
PV4	695	PV76	700	PV179	708	PY107	721	PY279	730	PY513	747	PY595	760
PV4a-x	695	PV86	700	PV180	709	PY107a-c	721	PY280	730	PY513a-b	747	PY595a	760
PV5	695	PV89	700	PV180a	709	PY108	722	PY281	731	PY514	748	PY596	764
PV5a-h	695	PV90	700	PV182	709	PY120	722	PY281a	731	PY514a-k	748	PY596a-p	764
PV6	695	PV94	700	PV183	709	PY120a	722	PY282	731	PY516	748	PY601	756
PV7	695	PV94b-f	700	PV184	709	PY121	722	PY292	731	PY516a-d	748	PY610	761
PV8	696	PV95	700	PV185	709	PY121a	722	PY292a-n	731	PY517	749	PY612	761
PV9	696	PV98	700	PV186	709	PY125	722	PY308	728	PY518	749	PY614	761
PV10	696	PV99	700	PV187	709	PY125a-f	722	PY308a-c	728	PY520	749	PY614a	761
PV10a-bp	696	PV104	700	PV188	709	PY126	723	PY309	731	PY520a	749	PY616	762
PV11	696	PV105	700	PV189	709	PY127	723	PY311	729	PY521	750	PY616a	762
PV11a-t	696	PV105a-b	700	PV190	709	PY128	723	PY331	732	PY522	750	PY617	762
PV12	696	PV106	700	PV191	710	PY128a-c	723	PY354	732	PY522a	750	PY618	762
PV13	696	PV106a	700	PV192	710	PY129	723	PY355	732	PY524	750	PY619	762
PV13a-d	696	PV107	701	PV193	710	PY129a	723	PY362	733	PY525	751	PY620	763
PV14	696	PV108	701	PV194	710	PY130	723	PY362a	733	PY534	751	PY620a	763
PV15	696	PV109	701	PV195	710	PY130a-g	723	PY363	733	PY535	751	PY621	763
PV15a	696	PV110	701	PV196	710	PY132	724	PY364	733	PY541	752	PY621a-c	763
PV16	696	PV111	701	PV197	710	PY132a	724	PY373	734	PY542	752	PY623	753
PV16a	696	PV111a-b	701	PV198	710	PY133	724	PY373a-h	734	PY543	752	PY624	757
PV18	697	PV113	701	PV199	710	PY134	724	PY404	734	PY544a-c	752	PY624a	757
PV19	697	PV124	702	PV200	711	PY135	724	PY408	731	PY555	753	PY632	765
PV27	697	PV136	702	PV201	711	PY135a	724	PY409	735	PY556	753	PY632a	765
PV33	697	PV141	702	PV202	712	PY136	725	PY412	735	PY556a	753	PY634	761
PV33a-b	697	PV142	702	PV203	712	PY162	725	PY418	736	PY558	753	PY636	764
PV34	697	PV142a-e	702	PV204	713	PY162a,c,d	725	PY418a-b	736	PY558a	753	PY637	764
PV35	697	PV145	702	PY9	714	PY168	726	PY419	736	PY558b	753	PY637a-e	764
PV36	697	PV147	703	PY9a-c	741	PY168a-c	726	PY419a-b	736	PY559	754	PY638	765
PV37	697	PV148	703	PY10	714	PY169	726	PY421	736	PY559a-b	754	PY639	765
PV37a-c	697	PV148a-d	703	PY10a-c	714	PY169a	726	PY436	736	PY560	754	PY641	766
PV38	697	PV149	703	PY11	714	PY171	726	PY436a	736	PY562	754	PY641a-aq	766
PV38a	697	PV150	703	PY11a-d	714	PY171a	726	PY437	737	PY563	754	PY642	767
PV39	697	PV151	703	PY15	715	PY172	726	PY437a-e	737	PY564	755	PY642a-bh	767
PV41	698	PV152	703	PY15a	715	PY172a-c	726	PY438	737	PY565	755	PY643	767
PV42	698	PV153	703	PY19	715	PY176	726	PY439	737	PY566	755	PY643a-q	767
PV43	698	PV154	703	PY25	715	PY176a-q	726	PY449	737	PY569	755	PY644	768
PV50	698	PV155	704	PY28	716	PY190	727	PY449a-g	737	PY569a-e	755	PY644a	768
PV51	698	PV156	704	PY29	716	PY191	727	PY451	738	PY571	756	PY645	768
PV51a-b	698	PV157	704	PY29a-j	716	PY192	727	PY453	738	PY572	756	PY646	768
PV52	698	PV158	704	PY38	717	PY192a-c	727	PY454	738	PY581	757	PY646a-k	768
PV52a-c	698	PV160	704	PY39	717	PY225	728	PY454a	738	PY582	757	PY647	768
PV53	698	PV161	704	PY41	717	PY225a-l	728	PY455	739	PY583	757	PY647a	768
PV54	698	PV162	704	PY43	718	PY228	833	PY455a	739	PY583a-b	757	PY648	768
PV55	698	PV164	705	PY43a	718	PY228a-f	833	PY456	739	PY584	757	PY648b	768
PV56	698	PV165	705	PY50	718	PY261	729	PY461	740	PY585	758	PY652	770
PV56a-f	698	PV166	705	PY50a-c	718	PY261a	729	PY462	740	PY586	758	PY653	770
PV57	698	PV167	705	PY56	719	PY262	729	PY469	735	PY586a-c	758	PY657	769
PV58	699	PV169	706	PY56a-d	719	PY262a-b	729	PY471	735	PY569	758	PY669	769
PV60	699	PV169a	706	PY57	719	PY263	729	PY476	741	PY587	758	PY670	769
PV61	699	PV170	706	PY57a	719	PY264	729	PY480	741	PY587a	758	PY671	769
PV62	699	PV170a	706	PY58	719	PY265	729	PY482	741	PY588	759	PY674	769
PV63	699	PV172	707	PY58a	719	PY270	730	PY484	743	PY588a-d	759	PY680	770
PV67	699	PV173	707	PY60	719	PY270a-c	730	PY485	742	PY589	759	PY683	770
PV67a	699	PV174	707	PY60a-p	719	PY271	730	PY486	743	PY589a-d	759	PY683a	770

OUTLINE DRAWINGS

DRAWING NO.	PAGE	DRAWING NO.	PAGE	DRAWING NO.	PAGE	DRAWING NO.	PAGE	DRAWING NO.	PAGE	DRAWING NO.	PAGE	DRAWING NO.	PAGE
PY684	770	PY806	783	PY926	797	PY1024	824	PY1101	848	PY1171	879	PY1247a-n	901
PY685	770	PY806a	783	PY926a	797	PY1025	825	PY1103	849	PY1172	880	PY1248	901
PY686	770	PY807	783	PY929	805	PY1026	825	PY1104	850	PY1173	880	PY1248a-c	901
PY690	770	PY810	783	PY930	805	PY1027	825	PY1105	850	PY1174	881	PY1249	898
PY707	771	PY812	783	PY931	805	PY1028	826	PY1106	851	PY1175	881	PY1250	901
PY708	771	PY813	783	PY932	805	PY1030	826	PY1107	851	PY1176	882	PY1251	901
PY709	771	PY814	784	PY933	805	PY1034	827	PY1108	852	PY1177	882	PY1252	901
PY711	771	PY815	784	PY934	799	PY1037	827	PY1111	852	PY1178	883	PY1253	901
PY712	772	PY817	784	PY935	799	PY1039	834	PY1111a	852	PY1179	883	PY1254	902
PY713	772	PY822	784	PY936	799	PY1040	834	PY1112	853	PY1180	884	PY1255	902
PY714	772	PY826	784	PY937	799	PY1041	830	PY1114	853	PY1181	884	PY1256	902
PY714a	772	PY826a	784	PY938	799	PY1042	830	PY1115	854	PY1182	885	PY1257	902
PY715	772	PY828	784	PY939	800	PY1042a-m	830	PY1116	854	PY1184	885	PY1258	902
PY715a	772	PY829	785	PY940	800	PY1043	831	PY1117	854	PY1186	886	PY1259	902
PY716	772	PY829a	785	PY941	801	PY1044	831	PY1118	855	PY1187	886	PY1260	902
PY718	772	PY830	785	PY942	801	PY1045	832	PY1119	855	PY1187a	886	PY1261	902
PY721	773	PY830a	785	PY943	802	PY1046	832	PY1120	855	PY1188	887	PY1262	903
PY722	773	PY831	785	PY944	802	PY1049	817	PY1122	856	PY1189	887	PY1263	903
PY723	773	PY832	785	PY945	803	PY1050	833	PY1123	856	PY1190	888	PY1264	903
PY725	773	PY840	786	PY946	803	PY1051	836	PY1124	857	PY1190a	888	PY1265	903
PY726	773	PY851	786	PY947	804	PY1052	836	PY1125	857	PY1191	888	PY1266	903
PY727	773	PY854	786	PY949	798	PY1052a	837	PY1126	858	PY1192	889	PY1267	903
PY729	774	PY855	786	PY950	798	PY1053	837	PY1127	858	PY1193	889	PY1268	903
PY730	774	PY856	795	PY951	806	PY1054	838	PY1128	859	PY1196	859	PY1269	904
PY732	774	PY856a	795	PY952	806	PY1055	838	PY1130	860	PY1197	829	PY1270	904
PY733	774	PY869	787	PY953	807	PY1056	839	PY1131	860	PY1199	890	PY1271	904
PY734	775	PY870	787	PY954	807	PY1058	839	PY1132	861	PY1200	890	PY1272	904
PY735	775	PY872	787	PY956	808	PY1060	828	PY1133	861	PY1201	891	PY1273	904
PY739	775	PY873	787	PY957	809	PY1061	840	PY1134	862	PY1203	891	PY1274	904
PY740	775	PY874	787	PY959	811	PY1067	840	PY1135	862	PY1203a-d	891	PY1275	904
PY741	775	PY875	787	PY960	811	PY1069	841	PY1136	863	PY1204	892	PY1276	904
PY742	775	PY876	788	PY977	810	PY1070	841	PY1137	863	PY1205	892	PY1277	905
PY743	776	PY877	788	PY977a	810	PY1071	842	PY1138	864	PY1206	892	PY1278	905
PY744	776	PY878	788	PY978	812	PY1072	842	PY1139	864	PY1207	893	PY1279	905
PY747	776	PY879	788	PY979	812	PY1073	843	PY1140	865	PY1208	893	PY1280	905
PY748	767	PY880	789	PY980	812	PY1075	843	PY1141	865	PY1209	894	PY1281	905
PY749	776	PY881	789	PY981	813	PY1076	843	PY1142	866	PY1210	894	PY1282	905
PY749a	776	PY882	789	PY982	813	PY1077	804	PY1143	866	PY1211	895	PY1283	907
PY750	776	PY883	789	PY983	814	PY1079	934	PY1144	867	PY1212	894	PY1284	905
PY751	776	PY884	790	PY984	814	PY1079a	934	PY1145	867	PY1213	894	PY1285	905
PY752	776	PY885	790	PY991	815	PY1080	844	PY1146	868	PY1214	895	PY1286	906
PY762	777	PY886	790	PY992	815	PY1080a	844	PY1147	868	PY1214b	895	PY1287	906
PY762a	777	PY887	790	PY993	816	PY1081	844	PY1148	869	PY1215	895	PY1288	906
PY763	777	PY889	791	PY994	816	PY1081a-e	844	PY1149	869	PY1216	895	PY1288a	906
PY764	778	PY890	791	PY996	817	PY1082	844	PY1150	870	PY1218	891	PY1289	906
PY765	778	PY892	791	PY996a	817	PY1082a-c	844	PY1151	870	PY1218a	891	PY1290	906
PY766	778	PY895	791	PY1003	818	PY1083	845	PY1152	871	PY1219	896	PY1291	906
PY768	778	PY899	792	PY1003a	818	PY1083a-d	845	PY1154	872	PY1220	896	PY1292	906
PY769	778	PY900	792	PY1005	818	PY1084	845	PY1155	872	PY1221	897	PY1293	906
PY770	779	PY901	792	PY1008	809	PY1085	845	PY1157	871	PY1222	897	PY1294	907
PY771	779	PY902	793	PY1008a-c	809	PY1086	845	PY1158	873	PY1235	898	PY1295	907
PY772	779	PY903	793	PY1010	808	PY1087	835	PY1159	873	PY1236	898	PY1296	907
PY775	779	PY904	794	PY1011	819	PY1087a-b	835	PY1160	874	PY1237	898	PY1297	907
PY776	779	PY905	794	PY1012	819	PY1088	835	PY1161	874	PY1238	898	PY1298	907
PY780	783	PY906	797	PY1013	820	PY1090	835	PY1162	875	PY1239	898	PY1299	907
PY782	780	PY909	795	PY1013a-b	820	PY1093	835	PY1163	875	PY1240	899	PY1300	907
PY783	780	PY910	795	PY1014	821	PY1093a	835	PY1164	876	PY1241	899	PY1301	908
PY785	781	PY913	795	PY1014a-b	821	PY1094	828	PY1165	876	PY1242	899	PY1302	908
PY793	781	PY916	795	PY1017	822	PY1096	846	PY1166	877	PY1243	900	PY1303	908
PY797	781	PY920	796	PY1019	822	PY1097	846	PY1167	877	PY1244	900	PY1304	908
PY798	782	PY921	796	PY1021	823	PY1098	847	PY1168	878	PY1245	900	PY1305	908
PY799	782	PY923	796	PY1022	823	PY1099	847	PY1169	878	PY1246	900	PY1306	908
PY804	782	PY924	796	PY1023	824	PY1100	848	PY1170	879	PY1247	901	PY1307	908

DRAWING INDEX – OPTOELECTRONICS

OUTLINE DRAWINGS

DRAWING NO.	PAGE	DRAWING NO.	PAGE	DRAWING NO.	PAGE	DRAWING NO.	PAGE	DRAWING NO.	PAGE	DRAWING NO.	PAGE	DRAWING NO.	PAGE
PY1308	908	PY1365	930	PY1425	942	PY1490	958	PY1555	980	PY1602	959		
PY1309	909	PY1366	925	PY1426	942	PY1491	957	PY1556	980	PY1603	986		
PY1310	908	PY1367	925	PY1428	943	PY1492	958	PY1557	977	PY1604	960		
PY1311	909	PY1368	926	PY1429	943	PY1493	958	PY1557a	977	PY1605	960		
PY1312	909	PY1369	926	PY1430	943	PY1494	961	PY1558	977	PY1606	988		
PY1313	909	PY1370	926	PY1431	943	PY1495	961	PY1559	980	PY1607	988		
PY1314	910	PY1371	926	PY1432	943	PY1496	961	PY1560	980	PY1608a-d	988		
PY1315	910	PY1372	927	PY1433	943	PY1497	961	PY1561	980	PY1609a-f	988		
PY1316	909	PY1373	927	PY1434	944	PY1498	962	PY1562	980	PY1610	988		
PY1317	909	PY1373a	927	PY1435	944	PY1499	962	PY1562a-b	980	PY1611a-b	988		
PY1318	909	PY1374	927	PY1436	944	PY1500	962	PY1563	982	PY1612	989		
PY1319	910	PY1375	927	PY1437	944	PY1501	962	PY1564	981	PY1613	989		
PY1319a	910	PY1376	928	PY1438	945	PY1504	963	PY1565	981	PY1614	989		
PY1320	911	PY1377	928	PY1439	945	PY1505	963	PY1565a	981	PY1615a-b	989		
PY1321	911	PY1378	928	PY1440	945	PY1506	963	PY1566	981	PY1616	989		
PY1322	912	PY1379	928	PY1441	945	PY1507	963	PY1566a	981	PY1617	989		
PY1323	912	PY1380	930	PY1442	945	PY1508	964	PY1567	979	PY1618	990		
PY1324	913	PY1381	925	PY1443	945	PY1509	964	PY1568	979	PY1619	990		
PY1324a-g	913	PY1382	929	PY1444	946	PY1510	965	PY1569	982	PY1620 a-g	990		
PY1325	913	PY1383	929	PY1445	946	PY1511	965	PY1570	981	PY1621a-b	990		
PY1326	914	PY1384	929	PY1446	946	PY1512	965	PY1571	981	PY1622a-e	990		
PY1327	914	PY1385	929	PY1447	946	PY1513	965	PY1571a-b	981	PY1623a-b	990		
PY1328	915	PY1386	930	PY1448	946	PY1514	966	PY1572	982	PY1624	991		
PY1329	914	PY1387	930	PY1449	946	PY1515	966	PY1572a-b	982	PY1625a-b	991		
PY1330	915	PY1388	930	PY1450	947	PY1516	966	PY1573	982	PY1626	991		
PY1331	915	PY1389	931	PY1451	947	PY1517	966	PY1574a-d	982	PY1627	991		
PY1332	915	PY1390	931	PY1452	947	PY1518	967	PY1575	983	PY1628a-b	991		
PY1333	915	PY1391	931	PY1453	947	PY1519	967	PY1576	982	PY1629	991		
PY1334	915	PY1392	932	PY1455	947	PY1520	967	PY1577	983	PY1630	992		
PY1335	916	PY1393	931	PY1456	948	PY1521	967	PY1578	983	PY1631a-d	992		
PY1336	916	PY1394	932	PY1457	948	PY1522	968	PY1578a	983	PY1632	992		
PY1337	916	PY1395	932	PY1458	948	PY1523	968	PY1579	983	PY1633a-b	992		
PY1337a-c	916	PY1396	932	PY1459	949	PY1524	968	PY1580	983	PY1634a-t	993		
PY1338	916	PY1397	933	PY1460	949	PY1525	968	PY1581	983	PY1635a-b	992		
PY1339	917	PY1398	933	PY1461	948	PY1526	969	PY1582	983	PY1636	992		
PY1339a-b	917	PY1399	933	PY1462	953	PY1527	969	PY1583	983	PY1637	993		
PY1340	917	PY1400	934	PY1463	950	PY1528	969	PY1583a	983	PY1638	993		
PY1341	917	PY1401	934	PY1464	950	PY1529	969	PY1583b	983	PY1639	994		
PY1342	917	PY1402	935	PY1465	952	PY1530	970	PY1584	984	PY1640	994		
PY1343	917	PY1403	935	PY1466	951	PY1531	971	PY1584a	984	PY1641	995		
PY1344	918	PY1403a	935	PY1467	951	PY1532	970	PY1584b	984	PY1642	995		
PY1345	918	PY1404	936	PY1468	814	PY1533	971	PY1584c	984	PY1643	996		
PY1346	918	PY1405	936	PY1469	952	PY1534	971	PY1585	985	PY1644	996		
PY1347	919	PY1405a	936	PY1470	954	PY1535	972	PY1586	985	PY1645	997		
PY1347a	919	PY1406	937	PY1471	954	PY1536	972	PY1587	985	PY1646	997		
PY1348	919	PY1407	937	PY1472	953	PY1537	973	PY1588	985	PY1647	998		
PY1349	919	PY1408	938	PY1473	955	PY1538	972	PY1589	983	PY1648	998		
PY1350	919	PY1409	938	PY1474	955	PY1539	970	PY1590	983	PY1649	998		
PY1351	921	PY1410	938	PY1475	948	PY1540	973	PY1591	983	PY1650	999		
PY1352	920	PY1411	938	PY1476	948	PY1541	974	PY1592	986	TO5	1002		
PY1352a-b	920	PY1412	939	PY1477	949	PY1542	974	PY1592a	986	TO8	1002		
PY1353	921	PY1413	939	PY1478	949	PY1543	975	PY1593	986	TO18	1002		
PY1354	922	PY1414	939	PY1479	953	PY1544	975	PY1594	986	TO46	1000		
PY1355	922	PY1415	939	PY1480	953	PY1545	976	PY1595	986	TO52	1000		
PY1356	923	PY1416	940	PY1481	953	PY1546	976	PY1596	987	TO66	1001		
PY1357	923	PY1417	940	PY1482	953	PY1548	977	PY1596a	987	TO72	1000		
PY1358	924	PY1418	940	PY1483	956	PY1548a	977	PY1597	987	TO92	1003		
PY1359	924	PY1419	940	PY1484	956	PY1549	977	PY1597a	987	TO93	1003		
PY1360	924	PY1420	941	PY1485	955	PY1550	977	PY1598	987	TO116	1003		
PY1361	924	PY1421	941	PY1486	955	PY1552	978	PY1599	959	TO206	1001		
PY1362	924	PY1422	941	PY1487	955	PY1553	978	PY1600	987	TO206aa-ag	1001		
PY1363	924	PY1423	941	PY1488	956	PY1554	977	PY1600a	987				
PY1364	925	PY1424	942	PY1489	956	PY1554a	977	PY1601	959				

NOTES

NOTES

MANUFACTURERS' SALES OFFICES AND REPRESENTATIVES

These manufacturers have listed their sales offices and representatives in this section for your convenience. Please contact the sales office nearest you for any information you may need.

ASEA - HAFO AB

Bruttovagen 1
Box 520
Jarfalla, Sweden S-175-26

Telephone +46 758 245 00
Telex 17262

U.S.A.
11501 Rancho Bernardo Rd.
Suite #200
San Diego, California 92127

Telephone 619-485-8200
Telex 695626

D.A.T.A. Code HAFO

CENTRONIC ELECTRO-OPTICS INC. (CENTRONIC LTD.)

HEADQUARTERS
Electro-Optic Components Division
Centronic House
King Henrys Drive
New Addington
Croydon
Surrey, U.K.

Telephone 0689-42121
Telex 896474 Centro G
FAX 0689-43053

WESTERN U.S. SALES OFFICE
Centronic Electro-Optics Inc.
1829 "B" De Havilland Drive
Newbury Park, CA 91320-1702

Telephone 805-499-5902
FAX 805-499-7770

CENTRONIC ELECTRO-OPTICS INC. (CENTRONIC LTD.) (Cont'd)

EASTERN U.S. SALES OFFICE
Centronic Electro-Optics Inc.
1101 Bristol Road
Mountainside, NJ 07092

Telephone 201-233-7200
Telex 910-350-3290
FAX 201-233-6092

D.A.T.A. Code CENB

CLAIREX ELECTRONICS

560 South Third Avenue
Mt. Vernon, New York 10550

Telephone 914-664-6602
Telex 137308

Clairex Electronics
28150 Par View Court
Escondido, CA 92026

Telephone 619-749-8474

D.A.T.A. Code CLA

EG&G VACTEC

10900 Page Boulevard
St. Louis, Missouri 63132

Telephone 314-423-4900
TWX 910-764-0811

D.A.T.A. Code VAC

SOL1

PHILIPS ELECTRONIC COMPONENTS & MATERIALS DIVISION

MARKETING COMMUNICATIONS
Building BA
Eindhoven, Netherlands

Telephone (040) 723142
Telex 35000

ARGENTINA
Philips Argentina S.A.
Div. Elcoma
Vedia 3892
Buenos Aires, 1430

Telephone 541-7141/7545
Telex 21243

AUSTRALIA
Philips Industries Holdings, Ltd.
Elcoma Division
11, Waltham Street
Artarmon, NSW 2064

Telephone (02) 439 3322
Telex 20165 PHILIND

AUSTRIA
Österreichische Philips
Bauelemente Industrie G.m.b.H.
Treister Strasse 64
Wien, A-1101

Telephone 62 91 11
Telex 131802

BELGIUM
N.V. Philips & M.B.L.E. Associated
9 Rue du Pavillon
Bruxelles, B-1030

Telephone (02) 242 7400
Telex 21420

PHILIPS ELECTRONIC COMPONENTS & MATERIALS DIVISION (Cont'd)

BRAZIL
Ibrape
Av. Brigadeiro Faria Lima
Caixa Postal 7383
Sao Paulo, SP, 1735

Telephone (011) 211-2600
Telex 112-4354

CANADA
Philips Electronics Ltd.
Electron Devices Division
601 Milner Avenue
Scarborough, Ontario M1B 1M8

Telephone 292-5161
Telex 65-25103

DENMARK
Miniwatt A/S
Strandlodsvej 2
P.O. Box 1919
Copenhagen S, DK-2300

Telephone (01) 54 11 33
Telex 15310

FINLAND
Oy Philips Ab
Elcoma Division
Kaivokatu 8
Helsinki 10, SF-00100

Telephone 1 72 71
Telex 124811

FRANCE
RTC-COMPELEC (RTCF)*
99/115 Qusi du President Roosevelt
92130 Issy Les Noulineaux

Telephone 40-93-8000
Telex 680495

*Manufacturer code inside ( ) can be found in Manufacturers' Profile

D.A.T.A. Code PHIN
Continued next page

SOL2

PHILIPS ELECTRONIC COMPONENTS & MATERIALS DIVISION

MARKETING COMMUNICATIONS
Building BA
Eindhoven, Netherlands

Telephone (040) 723142
Telex 35000

GERMANY
VALVO (VALG)*
UB Bauelemente der Philips GmbH
Valvo Haus
Burchardstrasse 19
Hamburg 1, D-2

Telephone (040) 3296-0
Telex 216891

HONG KONG
Philips Hong Kong Ltd.
Elcoma Div.
15/F Philips Industrial Bldg.
24-28 Kung Yip Street
Kwai Chung

Telephone (0) 24-5121
Telex 75820

ITALY
Philips S.p.A.
Sezione Elcoma
Piazza IV Novembre 3
Milano, I-120124

Telephone 2-6752.1
Telex 3 30262

*Manufacturer code inside ( ) can be found in Manufacturers' Profile

PHILIPS ELECTRONIC COMPONENTS & MATERIALS DIVISION (Cont'd)

JAPAN
Nihon Philips Corporation
Shuwa Shinagawa Bldg.
26-33 Takanawa, 3-chome
Minato-ku
Tokyo, 108

Telephone (448) 5611
Telex 26388 024 22205

KOREA
Philips Electronics (Korea) Ltd.
Philips House-Elcoma Division
260-199 Itaewon-dong
Yongsan-ku
C.P.O. Box 3680
Seoul

Telephone 794-4202
Telex 27291

MEXICO
Electronica S.A. de C.V.
Carr. Mexico
Toluca km 62.5
Edo. de Mexico
Toluca, 50140

Telephone 91(721)613-00
Telex 1771227

NETHERLANDS
Philips Nederland
Marketgroep Elonco
Postbus 90050
Eindhoven, 5600 PB

Telephone (040) 79 33 33
Telex 51238

NEW ZEALAND
Philips Electrical Industries Ltd.
Elcoma Division
110 Mt. Eden Road
C.P.O. Box 1041
Auckland

Telephone 605-914
Telex 2312

D.A.T.A. Code PHIN
Continued next page

SOL3

PHILIPS ELECTRONIC COMPONENTS & MATERIALS DIVISION

MARKETING COMMUNICATIONS
Building BA
Eindhoven, Netherlands

Telephone (040) 723142
Telex 35000

NORWAY
Norsk A/S Philips
Electronica Dept.
Sandstuveien 70
Oslo 6

Telephone 68 0200
Telex 11141

SOUTH AFRICA
EDAC (Pty.) Ltd.
3rd Fl. Rainer House
Upper Railway Rd. & Ove St.
New Doornfontein, Johannesburg 2001

Telephone 614-2362/9
Telex 8-3607

SPAIN
Miniwatt S.A.
Balmes 22
Barcelona 7

Telephone 301 63 12
Telex 54666

SWEDEN
Philips Komponenter A.B.
Lidingövägen 50
Stockholm 27, S-11584

Telephone 08/7821000
Telex 10776

SWITZERLAND
Philips A.G.
Elcoma Dept.
Allmendstrasse 140-142
Zürich, CH-8027

Telephone 01/488 22 11
Telex 52392

*Manufacturer code inside ( ) can be found in Manufacturers' Profile

PHILIPS ELECTRONIC COMPONENTS & MATERIALS DIVISION (Cont'd)

TAIWAN
Philips Taiwan Ltd.
San Min Bldg., 3rd Floor
57-1 Chung Shan. N. Road
Section 2
P.O.B. 22978
Taipei

Telephone (02)5631717
Telex 21570

UNITED KINGDOM
Mullard Ltd. (MULB)*
Mullard House
Torrington Place
London, WC1E 7HD

Telephone 01-580-6633
Telex 264341

UNITED STATES
Amperex Corporation (APX)*
Sem. & Microcircuits Division
Providence Pike, Slatersville
Rhode Island, 02876

Telephone 401-762-9000
Telex 92-7584

D.A.T.A. Code PHIN

RTC-COMPELEC

99/115 Qusi du President Roosevelt
92130 Issy Les Noulineaux
France

Telephone 40-93-8000
Telex PHILAMP PARIS 280 746

D.A.T.A. Code RTCF

SOL4

SIEMENS

SIEMENS COMPONENTS, INC.

OPTOELECTRONICS DIVISION
19000 Homestead Road
Cupertino, California 95014

Telephone 408-257-7910

CANADA
SIEMENS ELECTRIC LTD.
1180 Courtney Park Drive
Mississauga, Ontario L5T 1P2

Telephone 416-673-1996

WEST GERMANY
SIEMENS AG
Frankfurter Ring 152
Postfach 460705
Muenchen 46, D-8000

D.A.T.A. Code SIEG

TELEFUNKEN electronic
Creative Technologies

TELEFUNKEN ELECTRONIC

HEADQUARTERS
Theresienstrasse 2
Heilbronn, West Germany 7100

Telephone 07131-67-0
Telex 728746

UNITED STATES & CANADA
AEG Corporation
P.O Box 3800
Route 22 – Orr Drive
Somerville, New Jersey 08876

Telephone 201-722-9800
Telex 178028

D.A.T.A. Code ALGG

SOL5

NEW FROM D.A.T.A.BOOKS...

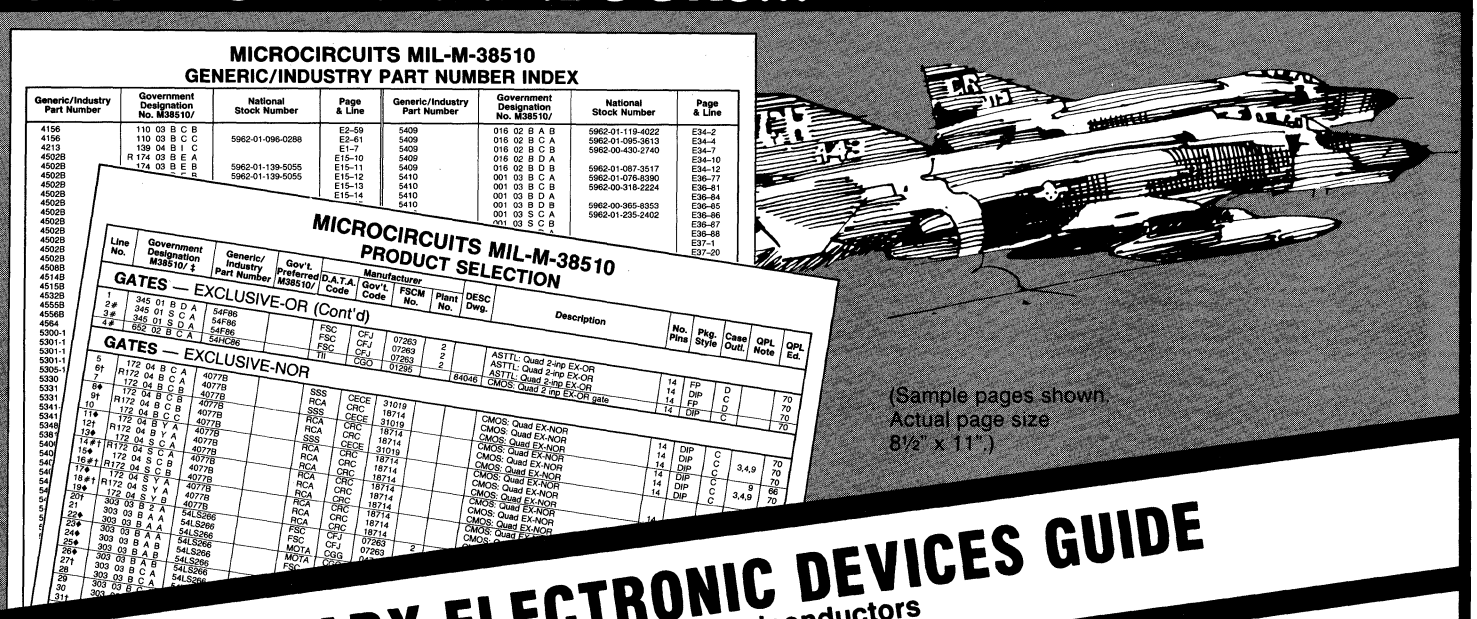

(Sample pages shown. Actual page size 8½" x 11".)

MILITARY ELECTRONIC DEVICES GUIDE

Microcircuits and Semiconductors

Easy-to-use cross-reference for:
Microcircuits-MIL-M-38510 • Microcircuits MIL-STD 883
Semiconductors MIL-S-19500

Now find MIL-SPEC device information from Standardized Military Drawings, QPLs, the MCRL and industry sources - all in one, easy-to-use guide.

For use by engineers, purchasing, receiving and other personnel – in U.S. Government agencies, military and military contractors or the aerospace industry – the Military Electronic Devices Guide helps you find microcircuits and semiconductors fast by number or by function.

Find Devices By Number

Use three cross-indexes to find a specific military microcircuit by government designation, generic/industry or National Stock Number (NSN). For semiconductors, use either the government designation/industry number or NSN to locate the device number you need.

Find Devices By Function

All product information is arranged in the Product Selection section by major function headings and subheadings to find products by device function. If you require a digital interface device, check the Microcircuits Product Selection section under the main heading "Digital Interface" and then the subheadings, "Buffer/Driver", "Encoder/Decoder", "I/O Peripheral", etc., until you locate the device you need.

The Product Selection sections also allow quick side-by-side comparisons. For MIL-M-38510 Microcircuits, the specifications include:

- device class
- package style
- number of pins
- case outlines
- lead finish
- technology

...and more with slash sheet number, manufacturers' codes, plant number, FSCM, Standardized Military Drawing numbers, device outline drawings, and QPL editions listed for both microcircuits and semiconductors.

A separate section lists manufacturers' logos and locations – addresses and phone numbers – with a handy numeric cross-reference by FSCM numbers.

Easy-To-Use – For Any Job

An engineer will use the Guide for determining the correct device number and for a quick "first-cut" component selection. Purchasing or repair personnel will locate alternate sources by generic/industry number. Once ordered, receiving personnel can use the NSN cross-reference index to verify that the correct component was received.

Also included in the Guide's extensive Component Locator is a key to quickly find further electrical characteristics in your D.A.T.A.BOOK library.

30-DAY MONEY-BACK GUARANTEE
Try this new D.A.T.A.BOOK FREE for 30 days. If you are not completely satisfied, return it within 30 days and owe nothing.

Keep Up-To-Date On MIL-SPEC Information

Completely Revised for each new QPL

Order the new **Military Electronic Devices Guide** at $195 and receive 4 editions - each new and completely updated concurrent with new QPLs.

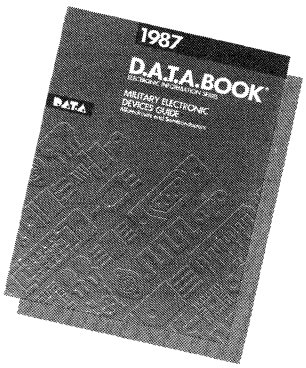

Prices good in U.S. only and are subject to change without notice. Other countries write for prices.

D.A.T.A., Inc.
9889 Willow Creek Road
P.O. Box 26875
San Diego, CA 92126

For More Information or Toll-Free Ordering:
1-800-854-7030, In California 1-800-421-0159

SYMBOLS & CODES COMMON TO D.A.T.A. OPTOELECTRONICS BOOK

OPERATING TEMPERATURE RANGE CODE

CODE	TEMP RANGE (°C)
0	0 to 9
1	10 to 19
2	20 to 29
3	30 to 39
4	40 to 49
5	50 to 59
6	60 to 69
7	70 to 79
8	80 to 89
9	90 to 99
A	100 to 109
B	110 to 119
C	120 to 129
D	130 to 139
E	140 to 149
F	150 to 159
G	160 to 169
H	170 to 179
J	180 to 189
K	190 to 199
M	200 to 209
N	210 to 219
P	220 to 229
R	230 to 239
S	240 to 249
T	250 to 259
X	Not Specified

SYMBOLS

- ⌀ – Base or stud
- ⌀ – Case
- § – Junction
- % – Storage
- $ – Both values of temp are positive
- ♦ – One specified operating temp

EXAMPLES

5 C

Min value lies between −50°C and −59°C

Max value lies between 120°C and 129°C

1 8 $

Min value lies Between +10°C and +19°C (pos. because of symbol)

Max value lies between 80°C and 90°C

K X ♦

Specified operating point lies between −190°C and −199°C

COLOR CODE

1 – Infrared
2 – Red
3 – Orange, amber
4 – Yellow
5 – Green
6 – Blue
7 – Violet
9 – Silver
10 – White
11 – Black
12 – Gold

Multi-Color devices are coded by combining single- color codes.
Example:
25 – Red-Green
24 – Red-Yellow
23 – Red-Orange

TYPE NUMBER

(1) Used when more than one manufacturer assign the
(2) same type number to different devices, or when
(3) two or more like devices are listed with different test parameters.

(A) This information was derived from an advanced-release data sheet. Working components may have not yet reached production.

LINE NO.

▼ – New Type
♦ – Revised Specifications

DRAWING

‡ – Available in multiple packaging
⌀ – RND
□ – RECT
△ – STRIP
* – Chip

SCHEMATIC

♦ – Terminal designation indicated in outline drawing
– Device contains more than one channel (photocouplers only)

OPTOELECTRONICS MANUFACTURERS' CODES AND NAMES

D.A.T.A. MFRS.' CODE	MANUFACTURERS
ALGG	* Telefunken Electronic, Semiconductor
AND	AND, Inc.
ANS	Analog Systems
AOI	Antel Optronics, Inc.
APX	Amperex Electronics Co.
ASE	Applied Solar Energy Corp.
BAR	Barnes Engineering Co.
BEC	Babcock Display Products
CENB	* Centronic Electro-Optics, Inc.
CHE	Cherry Semiconductor Corp.
CHM	General Instrument Lamp Division
CLA	* Clairex Electronics
CPD	Devar Inc.
CRS	Crystaloid Electronics Co.
DECO	Digital Electronics Corp.
DIA	Dialight Corp.
DMC	DYMEC
DPI	Displays Inc.
DTL	G.E. Datel
EEVB	The English Electric Valve Co., Ltd.
EGG	E G & G/Photon Devices
EII	Eltec Instruments Inc.
FACC	Ford Aerospace & Communications Corp.
FERB	Ferranti Electronics Ltd.
FMI	Fujitsu Microelectronics, Inc.
FSC	Fairchild Semiconductor
GESY	General Electric Semiconductor Co.
GIC	General Instrument, Corp.
HAFO	* ASEA-HAFO AB
HAM	Hamlin, Inc.
HEI	HEI, Inc.
HITJ	Hitachi Limited
HON	Honeywell Inc.
HPA	Hewlett Packard

D.A.T.A. MFRS.' CODE	MANUFACTURERS
HPKJ	Hamamatsu Photonics
IMTM	Industria Mexicana Toshiba S.A.
INRI	International Rectifier Corp.
IPI	Integrated Photomatrix, Inc.
IRI	Infrared Industries, Inc.
KCC	Kinematics & Control Corp.
KODC	Kodenshi Corp.
LAD	Laser Diode, Inc.
LCF	LeCroy Research Systems Corp.
LEE	Leecraft Manufacturing Co., Inc.
LTN	Lite-On Corp.
LWE	LEDCO Div. of Wilbrecht Electronics
LXD	Liquid Xtal Display, Inc.
MAI	Math Associates
MATJ	Matsushita Electronics Corp.
MDC	Microwave Diode Corp.
MEHK	Micro Electronics Ltd.
MER	Meret Inc.
MII	Micon Industries
MITA	Mitsubishi Electronics America, Inc.
MITJ	Mitsubishi Electric Corp.
MKT	Marltech International Corp.
MOL	Cooper Laser Sonics
MOTA	Motorola Semiconductor Products, Inc.
MPI	Micropac Industries, Inc.
MPS	Micro Power Systems
MULB	Mullard Limited
NAT	National Electronics, Inc.
NECE	NEC Electronics USA, Inc.
NECJ	Nippon Electric Co.
NEI	Noritake Electronics, Inc.
NSC	National Semiconductor Corp.
OAK	Oak Switch Systems, Inc.
OKIJ	OKI Semiconductor

SYMBOLS & CODES COMMON TO D.A.T.A. OPTOELECTRONICS BOOK

MATERIAL CODE

Code	Mat	Code	Mat	Code	Mat
AA	Cd	BK	GeHg	CJ	InGaAs
AB	Ge	BM	GeCu	CK	Calcium Fluoride
AC	Se	BN	GeCd	DA	CdSe: CdS
AD	Si	BP	GeZn	DB	GaAsP: N
AE	Tu	BQ	SiAs	DC	GaP: ZnO
AF	P	BR	SiGa	EA	GaAsP: GaAs
BA	CdS	BS	PbSe	EB	GaAsP: GaP
BB	CdSe	CA	GaAsP	EC	GaAs: Al
BC	GaAs	CB	GaAs: Si	ED	LiTaO
BD	GaP	CC	GaAs: Zn	EE	TSN
BE	GaSb	CD	GaP N	EF	In Ga AsP
BF	InAs	CE	GaAlAs	EG	SiC; AN,N
BG	InSb	CF	CdSSe	EH	GaAs:GaAlAs
BH	PbS	CG	HgCdTe	EJ	AlGaAs
BI	SiC	CH	Lead Tin Telluride	XX	Not specified by mfr.
BJ	GeAu	CI	Caesium Iodide		

SOURCE CODE

A – GaAs
B – Tungsten (Temp not specified)
C – Tungsten (2850 to 2860K)
D – Tungsten (2780K)
E – Tungsten (2870K to 2880K)
F – Tungsten (2800K)
G – Tungsten (2700K)
H – Tungsten (2840K)
J – Tungsten (1700K)
K – Black-body (295K)
L – Black-body (500K)
S – Solar source at earth's surface

FEATURES

AC	For AC Operation
Cyl	Cylindrical Shape
FO	Fiber Optic
Flat	Flat or Thin Shape
Flsh	Flashing or Blinking
Hsg	With Housing or Enclosure
Lug	Mounting Lug
Match	Matched Emitter/ Sensor or Matching Factor
Mini	Miniature
Opsw	Optical Switch
RYG	Red, Yellow, and Green Available
Rect	Rectangular
Res	Series/Current Limiting Resistor
Side	Side Looking Active Area
Spot	Narrow Beam Angle (less than 5 degrees)
Stkbl	Stackable devices
Tri	Triangular Shape
Wire	Wire Leads
w/Logic	Internal Logic Circuitry

OPTOELECTRONICS MANUFACTURERS' CODES AND NAMES

D.A.T.A. MFRS.' CODE		MANUFACTURERS
OKIJ		OKI Electric Industry Co. Ltd.
OPCJ		Optrex Corp.
OPE		Optoelectronics, Inc.
OTI		Opto Technology, Inc.
OTK		Optek, Div. of Crown Semiconductors, Inc.
PCI		PCI Inc.
PHIN		Philips Electronic Components & Material Div.
PLOB		Plessey Optoelectronics & Microwave
QTC		Quantrad Corporation
RCA		RCA, Solid State Division
REA		Readouts, Inc.
REC		Refac Electronics Corp.
RET		EG&G Reticon
RHM		Rohm Corp.
RKW		Rockwell Int'l Elec. Devices Div.
RSCB	★	R.S. Components Ltd.
RTCF		RTC-Compelec
RTN		Raytheon Company
SAI		Sanders Associates, Inc.
SAKJ		Sanken Electric Co. Ltd.
SAM		Skan-A-Matic Corp.
SBR		Santa Barbara Research Center
SCA		Semicoa
SDC		Silicon Detector Corp.
SHL		Shelly Associates
SIEG	*	Siemens Aktiengesellschaft
SIEX		Siemens - Optoelectronics Div.
SIX	*	Siliconix, Inc.
SOL		Silicon Sensors, Inc.
SONY		Sony Corp.
SPR		Sprague Electric Co.
SRPJ		Sharp Corp.
STAJ		Stanley Electric Co., Ltd.
STCE		Stantel Components
STE		Sensor Technology, Inc.
SXI		Silonex Inc.
TCY		Teledyne Crystalonics
TFS		III-V Semiconductors, Inc.
TII		Texas Instruments Inc., Literature Response Center
TOI	★	Texas Optoelectronics, Inc.
TOSA	★	Toshiba America, Inc.
TOSJ		Toshiba Corp.
TPN	★	Teledyne Philbrick
TRW	★	TRW LSI Products
TRWO		TRW Optron
TSEJ		Tottori Sanyo Electric Co., Inc.
UCE		Uce, Inc.
UDT		United Detector Technology
USSR		V/O Electronzagranpostavka
VAC	*	E G & G Vactec, Inc.
VALG		Valvo GmbH

★ New manufacturers added since last edition

* See separate sales office listings for additional locations

We didn't get to be a major opto supplier by building minor products.

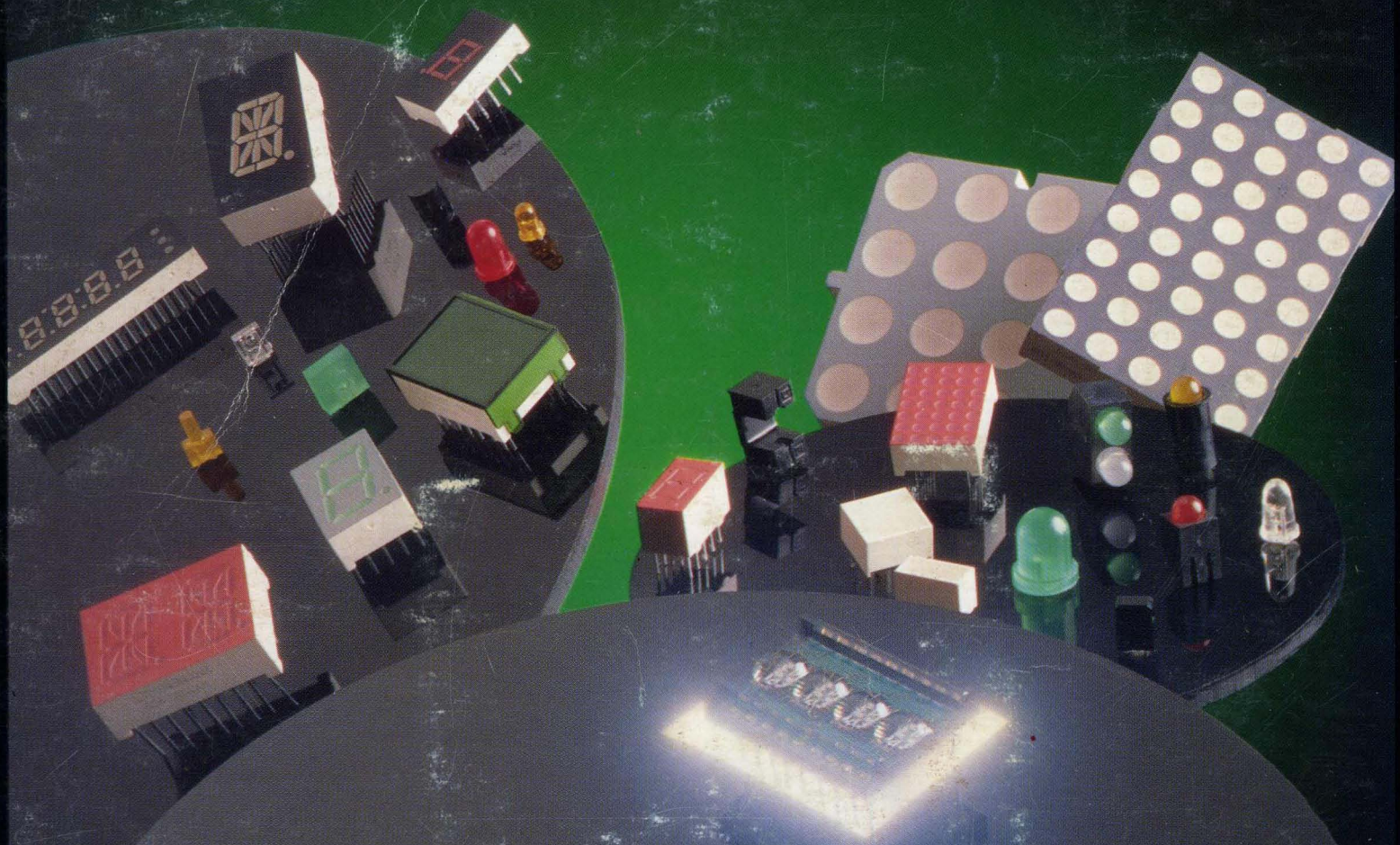

The fact is, we've been building industry leading optoelectronic products for over a decade. We've also built a reputation for creating products which consistently provide high performance and reliability.

Like our new alphanumeric intelligent displays featuring a CMOS IC containing ROM, RAM, decoder and drivers, with an ultra-fast 50 ns access time.

And the industry's widest selection of dot matrix displays which provide unmatched brightness and uniformity with single, dual and tri-colored capabilities.

We also produce visible and infrared discrete components, custom visible display modules, surface mount LEDs and over 40% of the world's clock displays.

And because we are totally vertically integrated with major automated offshore manufacturing facilities, we have unlimited custom design and production capabilities.

So, if you need reliable, innovative optoelectronic products, give us a call to get the name of the distributor or sales representative in your area. We'll show you why you should make Lite-On your major opto supplier.

LITE-ON

LITE-ON CORPORATION
M.S. 570
4951 Airport Parkway
Dallas, Texas 75248
(214)-239-3565