Power

Power supply, Decoupling caps, unused gates

File: power.kicad_sch

Ram

RAM connectors

File: ram.kicad_sch

PC_&_Stack File: PC_Stack.kicad_sch

PC, MMU Stack & Refresh

Alu_&_Flags

ALU, flags & registers

Connectors

File: Connectors.kicad_sch

Cardedge connectors

Timing

Clocking

File: Timing.kicad_sch

Instruction register(s)
Control state machine
Microcode ROM's
decoding logic

File: instr_decoder.kicad_sch

Datapoint 5500 motherboard

Sheet: /	
File: DP5500_CPU.kicad_sch	
Title: Reverse engineered Dp5500 schematic	
Size: A3	Date: 2024-01-16
KiCad E.D.A. kicad 7.0.10-7.0.10~ubuntu22.04.1	Id: 1/8
	Rev: 1.0

Clocking circuitry

Sheet: /Timing/
File: Timing.kicad_sch

Title:

Size: A3	Date:	**Rev:**
KiCad E.D.A. kicad 7.0.10-7.0.10-ubuntu22.04.1		Id: 2/8

State machine with microcode

Interrupt controller

Main state machine

Sheet: /instr_decoder/	
File: instr_decoder.kicad_sch	
Title:	
Size: A2	Date:
KiCad E.D.A. kicad 7.0.10-7.0.10-ubuntu22.04.1	**Rev:** Id: 3/8

PC,Stack,MMU,Refresh

Sheet: /PC_&_Stack/
File: PC_Stack.kicad_sch

Title:

Size: A3 | Date: | **Rev:**
KiCad E.D.A. kicad 7.0.10-7.0.10~ubuntu22.04.1 | Id: 4/8

MMU base register

program counter

Stack pointer

Stack

Sector table

MMU adder

Refresh counter & mux

Write sector table

Physical memory address

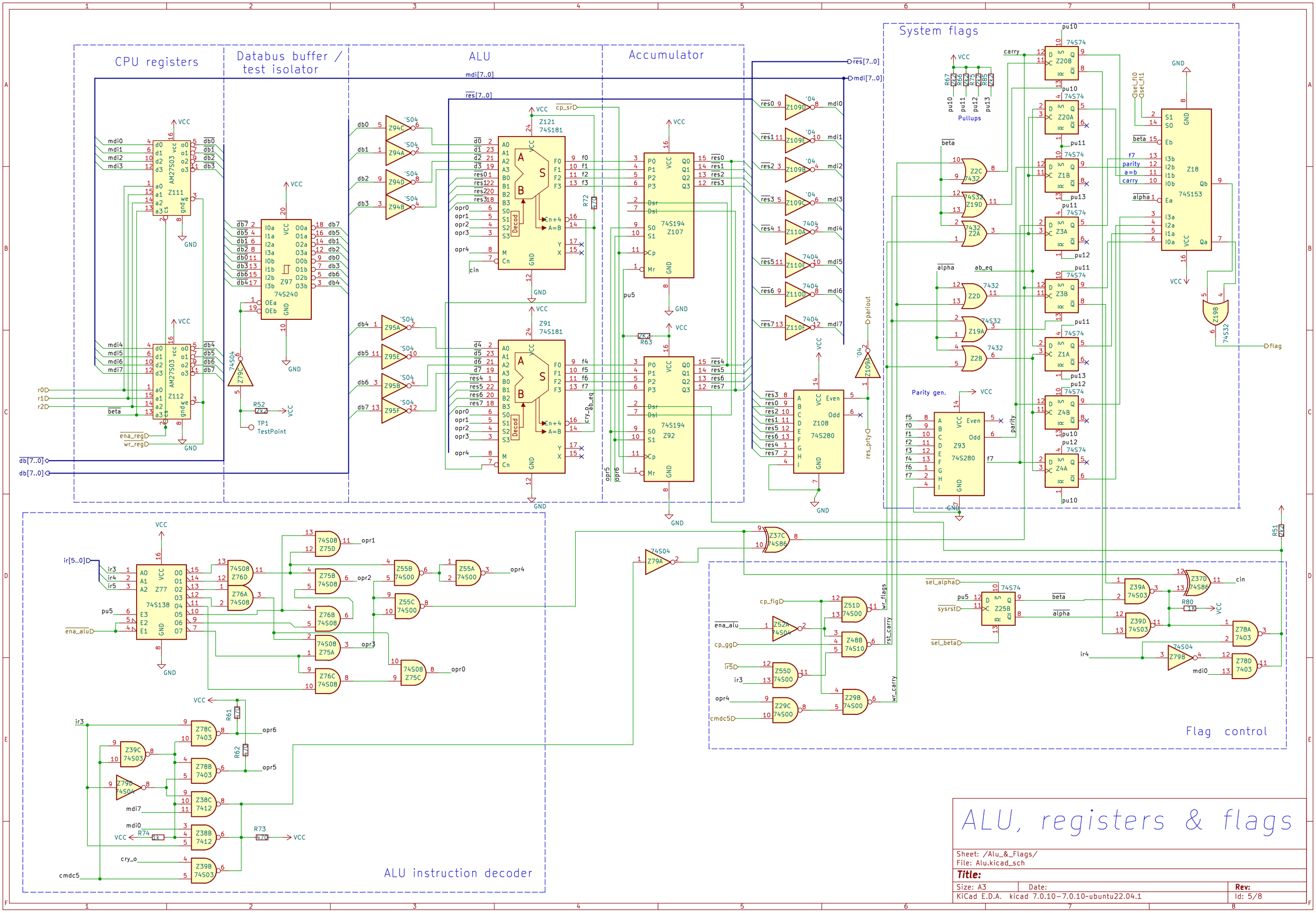
CPU registers
Databus buffer / test isolator
ALU
Accumulator
System flags
Flag control
ALU instruction decoder
Pullups
Parity gen.
TP1
TestPoint
ALU, registers & flags
Sheet: /Alu_&_Flags/
File: Alu.kicad_sch
Title:
Size: A3
Date:
Rev:
KiCad E.D.A. kicad 7.0.10-7.0.10~ubuntu22.04.1
Id: 5/8

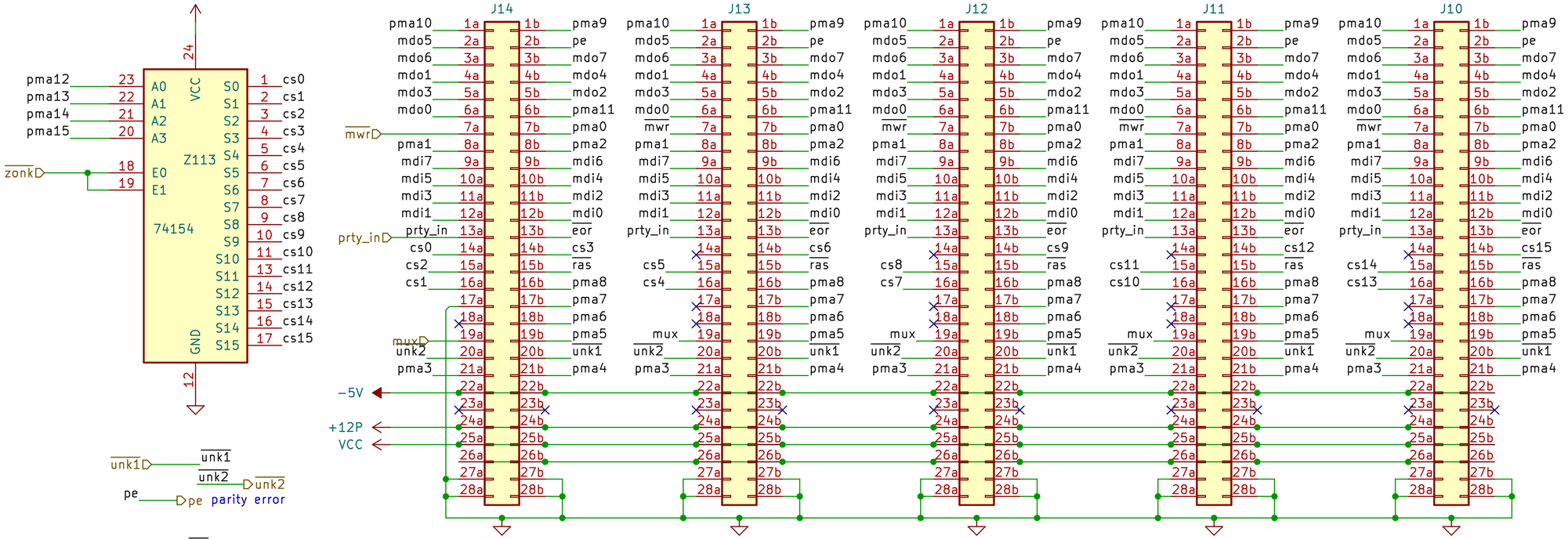

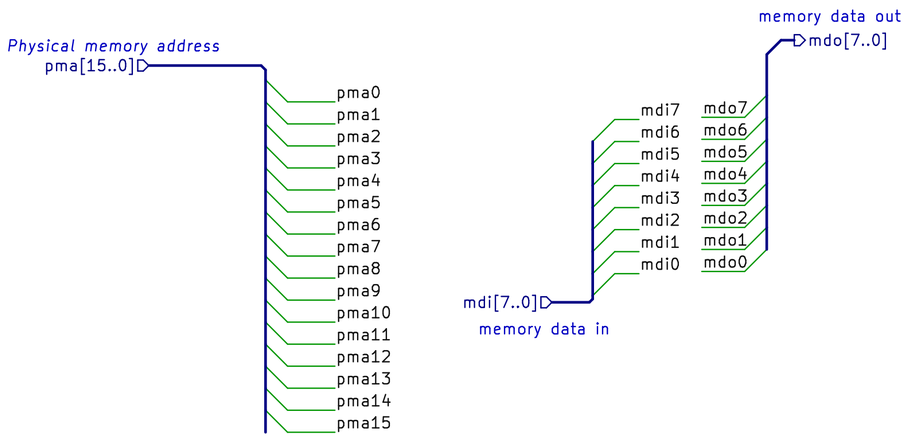

RAM connectors

Sheet: /Ram/		
File: ram.kicad_sch		
Title:		
Size: A4	Date:	**Rev:**
KiCad E.D.A. kicad 7.0.10-7.0.10~ubuntu22.04.1		Id: 6/8

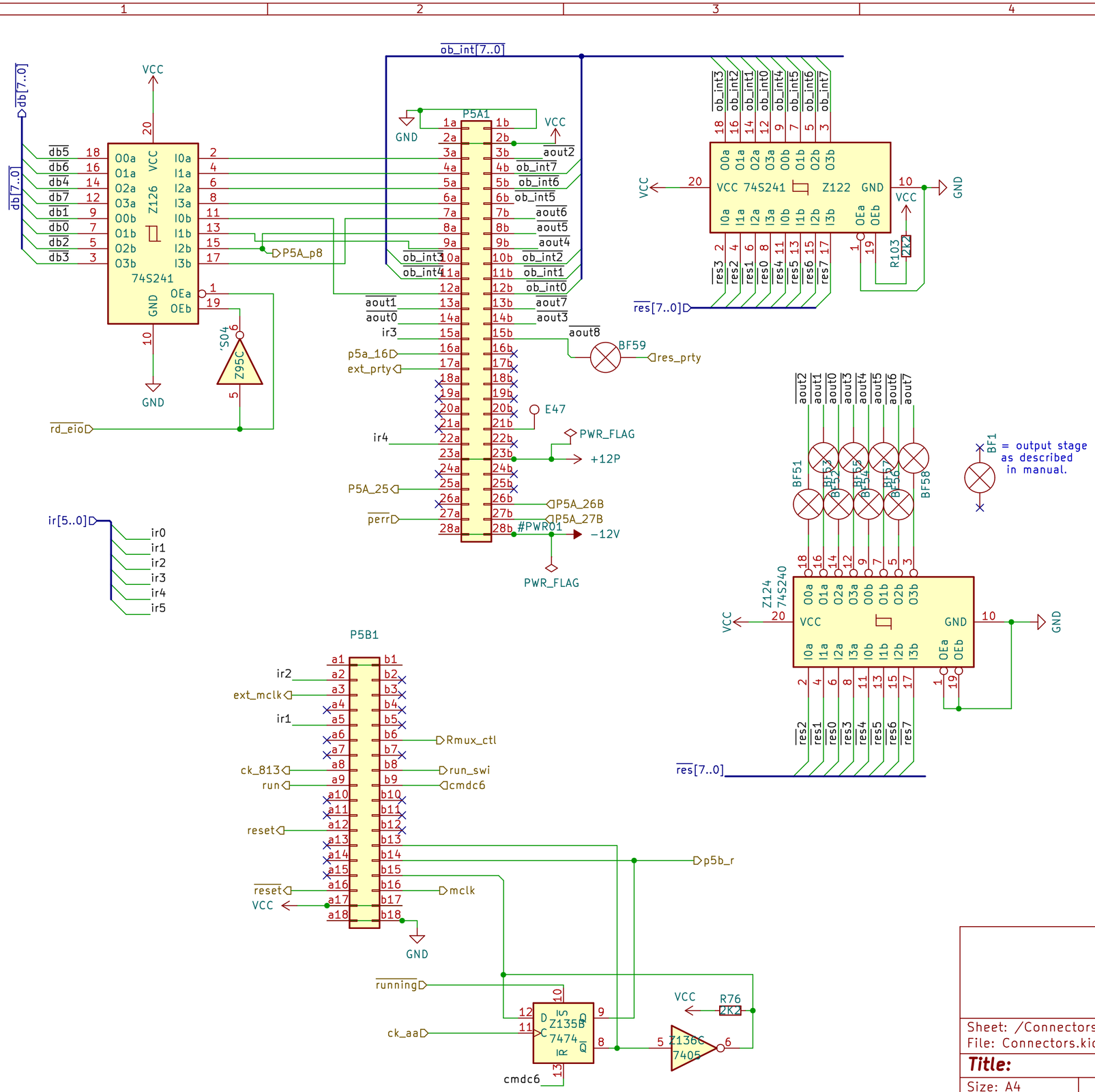
db[7..0]
VCC
74S241
Z126
db5
db6
db4
db7
db1
db0
db2
db3
GND
rd_eio
'S04
Z95C
P5A_p8
ob_int[7..0]
P5A1
aout1
aout0
ir3
p5a_16
ext_prty
ir4
P5A_25
perr
aout8
BF59
res_prty
E47
PWR_FLAG
+12P
P5A_26B
P5A_27B
#PWR01
−12V
ir[5..0]
ir0
ir1
ir2
ir3
ir4
ir5
P5B1
ir2
ext_mclk
ir1
reset
ck_813
run
Rmux_ctl
run_swi
cmdc6
mclk
p5b_r
running
ck_aa
cmdc6
Z135B
7474
Z136C
7405
R76
2K2
ob_int3
ob_int2
ob_int1
ob_int0
ob_int4
ob_int5
ob_int6
ob_int7
Z122
74S241
R103
res[7..0]
aout2
aout7
aout6
aout5
aout4
aout3
BF51
BF53
BF55
BF57
BF56
BF54
BF52
BF58
BF1
= output stage
as described
in manual.
Z124
74S240
Cardedge conn.
IO buffers
Sheet: /Connectors/
File: Connectors.kicad_sch
Title:
Size: A4
Date:
Rev:
KiCad E.D.A. kicad 7.0.10−7.0.10~ubuntu22.04.1
Id: 7/8

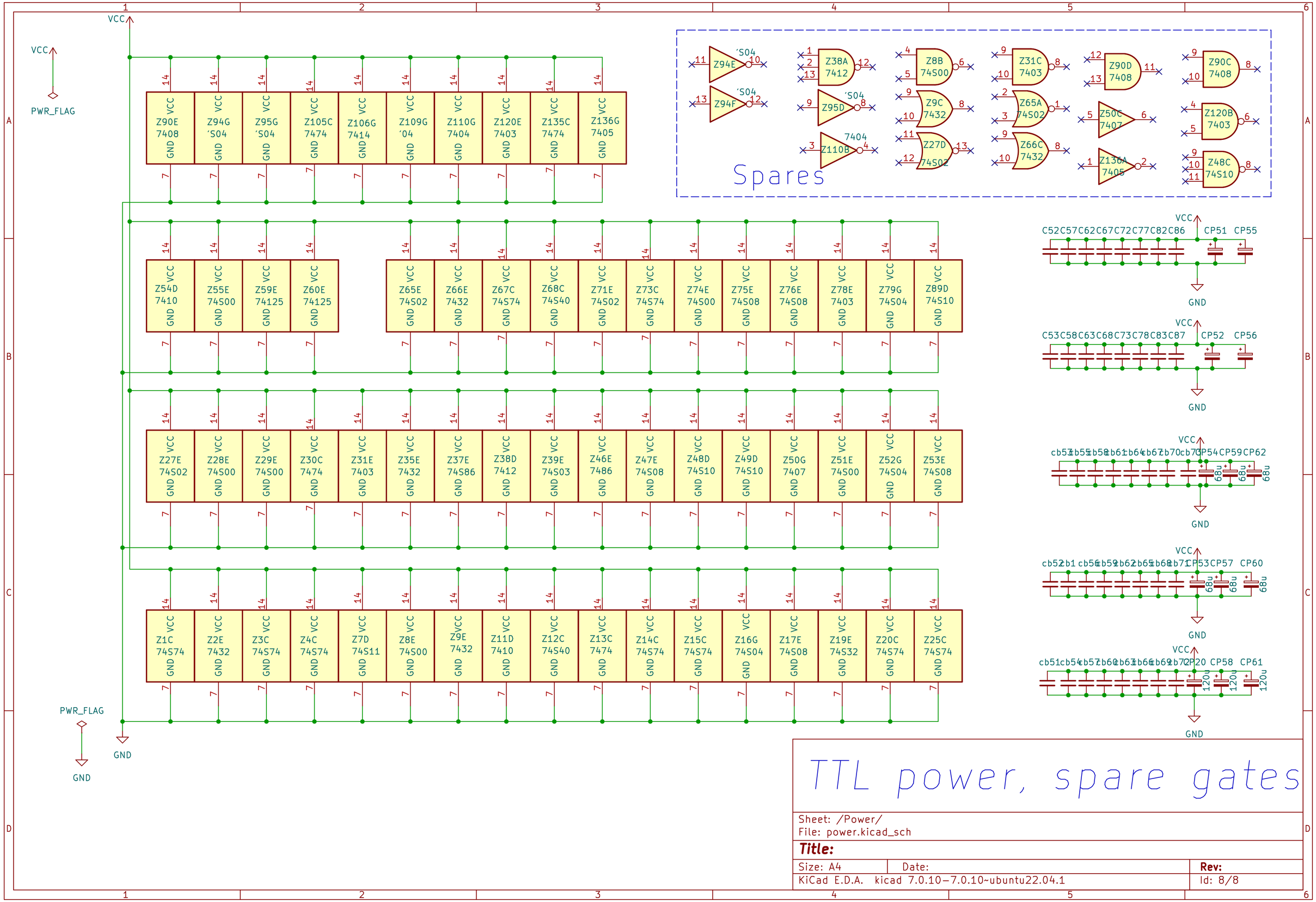

TTL power, spare gates

Sheet: /Power/
File: power.kicad_sch

Title:

Size: A4 | Date: | **Rev:**

KiCad E.D.A. kicad 7.0.10-7.0.10~ubuntu22.04.1 | Id: 8/8