13F5764

PUBLICATIONS REFERENCE DRAWING

MACHINE TYPE/MODEL NO. TA90

MACHINE NAME - Magnetic Tape Subsystem

E C NO.	DESCRIPTION / COMMENTS
C04824	VOL. A01 - Maintenance Guide
C13764	VOL. A01 - Maintenance Guide

TA90/E Magnetic Tape Subsystem

digital **Maintenance Guide**

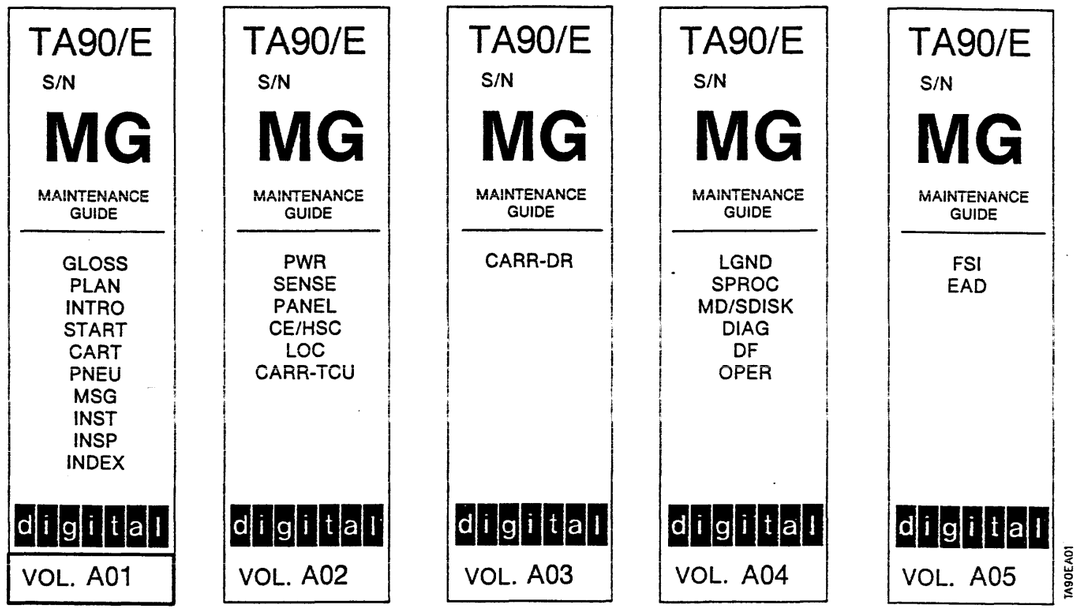

Maintenance Library

Maintenance Guide	**Vols. A01 to A05**
Logic Diagrams	**Vols. C01 and D01**

EK-PTA90-MG-002

Preface

This manual contains maintenance information about the Digital TA90 Magnetic Tape Subsystem and is intended for customer engineers responsible for servicing the TA90 tape subsystem.

Portions of this document contain material copyrighted by IBM Corporation.

Prerequisite Knowledge

It is assumed that you have a background in data processing concepts and that you are familiar with the hexadecimal numbering system, stored program concepts, and have a basic understanding of tape subsystems and their relationship within a system/cluster.

Related Documents

TA90 Operator's Manual, EK-OTA90-OM.

The information in this document is subject to change without notice and should not be construed as a commitment by Digital Equipment Corporation. Digital Equipment Corporation assumes no responsibility for any errors that may appear in this document.

The software described in this document is furnished under a license and may be used or copied only in accordance with the terms of such license.

No responsibility is assumed for the use or reliability of software on equipment that is not supplied by Digital Equipment Corporation or its affiliated companies.

Copyright ©1989 by Digital Equipment Corporation.

All Rights Reserved
Printed in U.S.A.

The following are trademarks of Digital Equipment Corporation:

digital	HSC	Rainbow	TMSCP
DEC	MASSBUS	RSTS	UNIBUS
DECmate	PDP	RSX	VAX
DECUS	P/OS	RT	VMS
DECwriter	Professional	STI	VT
DIBOL			Work Processor

Portions of this document contain material copyrighted of the International Business Machines Corporation.

Safety

This product meets Digital safety standards.

The following information has been included in this publication for the use and safety of Digital personnel.

Use these rules to ensure general safety:

- Observe good housekeeping in the area of the machines during maintenance and after completing it.
- Use only field-supply items (such as adhesives, cleaning fluids, lubricants, paints, and solvents) that have been approved by Digital, that is, are supplied under a Digital part number.
- When lifting any heavy object:

  1. Ensure that you can stand safety without slipping.
  2. Balance the weight of the object between your two feet.
  3. Use a slow lifting force. Never move suddenly or twist when you attempt to lift.
  4. Lift by standing or by pushing up with your leg muscles; this action removes the strain from the muscles in your back. *Do not attempt to lift any objects that you think are too heavy for you.*

- Do not perform any action that causes hazards to the customer or that makes the equipment unsafe.
- Put removed covers and other parts in a safe place, away from all personnel, while you are servicing the machine.
- Always keep your tool case away from walk areas so that other persons will not trip over it, for example, put it under a desk or table.
- Do not wear loose clothing that can be trapped in the moving parts of a machine. Ensure that your sleeves are fastened or are rolled up above the elbows. If your hair is long, fasten it. Do not wear jewelry, chains, metal-frame eyeglasses, or metal fasteners for your clothing.

  Remember: A metal object lets more current flow if you touch a live conductor.

- Insert the ends of your necktie or scarf inside other clothing or fasten the necktie with a clip, preferably nonconductive, approximately 8 centimeters (3 inches) from the ends.
- Wear safety glasses when you are:
  - Using a hammer to drive pins or similar parts
  - Drilling with a power hand-drill
  - Using spring hooks or attaching springs
  - Soldering parts
  - Cutting wire or removing steel bands
  - Cleaning parts with solvent, chemicals, or cleaning fluids
  - Working in any other conditions that might be hazardous to your eyes.
-
- Before you start the machine, ensure that other service representatives and the customer's personnel are not in a hazardous position.
- After maintenance, reinstall all safety devices such as shields, guards, labels, and ground wires. Exchange any safety device that is worn or defective for a new one.

  Remember: Safety devices protect personnel from hazards. You destroy the purpose of the devices if you do not reinstall them before completing your service call.
- Reinstall all covers correctly before returning the machine to the customer.

Safety with Electricity

Observe these additional rules when working on equipment powered by electricity:

- Find the room emergency power-off (EPO) switch or disconnecting switch. If an electrical accident occurs, you can then operate the switch quickly.
- Do not work alone under hazardous conditions or near equipment that has hazardous voltages. Always inform your manager of any possible problems or if you must work alone.
- Disconnect all power:
  - Before removing or installing main units
  - Before working near power supplies
  - Before doing a mechanical inspection of power supples
  - Before installing changes in machine circuits.
- Before you start to work on the machine, unplug the machine's power cable. If you cannot unplug the cable easily, ask the customer to switch off the wall box switch that supplies power to the machine, and lock the wall box switch in the off position.
- If you need to work on a machine that has *exposed* electrical circuits, observe the following precautions:
  - Ensure that another person, who is familiar with the power-off controls, is near you.

    Remember: Another person must be there to switch off the power, if necessary.
  - **CAUTION:**

    Some Digital hand tools have handles covered with a soft material that does not insulate you when working with live electrical circuits.

    Use only those tools and testers that are suitable for the job you are doing.
  - Use only one hand when working with powered-on electrical equipment; keep the other hand in your pocket or behind your back.

    Remember: There must be a complete circuit to cause electrical shock. By observing the above rules, you may prevent a current from passing through the vital parts of your body.
  - When using testers, set the controls correctly and use the Digital-approved probe leads and accessories intended for that tester.
  - **CAUTION:**

    Many customers have, near their equipment, rubber floor mats that contain small conductive fibers to decrease electrostatic discharges. Do not use this wrong type of mat to protect yourself from electric shock.

    Stand on suitable rubber mats (obtained locally, if necessary) to insulate you from grounds such as metal floor strips and machine frames.
- Use extreme care when measuring high voltages.
- Do not use tools or testers that have not been approved by Digital. Ensure that electrical hand tools, such as power drills and Wire-Wrap[1] tools, are inspected regularly.
- Do not use worn or broken tools and testers.
- Never *assume* that power has been disconnected from a circuit. First, *check* that it has been switched off.
- Always look carefully for possible hazards in your work area. Examples of these hazards are: moist floors, nongrounded power extension cables, power surges, and missing safety grounds.
- Do not touch live electrical circuits with the glass surface of a plastic dental mirror. The surface is conductive; such touching can cause personal injury and machine damage.
- Unless the maintenance information specifically lets you, do not service the following parts *with power on them* when they are removed from their normal operating places in a machine:

  Power supply units
  Pumps
  Blowers and fans
  Motor generators

  and similar units. (This rule ensures correct grounding of the units.)
- If an electrical accident occurs:
  - Use caution; do not become a victim yourself.
  - Switch off power.
  - Send another person to get medical aid.
  - If the victim is not breathing, decide whether to give rescue breathing.

[1] Trademark of the Gardner-Denver Co.

Safety 10 SAFETY 10

Safety

Danger Notices

A danger notice is used to notify the customer engineer that potentially lethal or extremely hazardous conditions exits.

The danger safety notices and their page locations contained in the MG are shown below.

DANGER

Electric shock. The Drive Power switch removes dc voltages to that drive only, and does not affect the other drive in the tape transport unit

CARR-DR 8.

DANGER

Electric shock. Hazardous voltages are present on the ac power circuit breaker and the line cord.

CARR-DR 8.

DANGER

Electric shock. When setting the control unit ac power circuit breaker off, hazardous voltages are still present on the ac power circuit breaker and on the ac power line cord.

CARR-TCU 6.

DANGER

Hazardous electrical voltages are present in the receptacle.

INST 6.

DANGER

Hazardous electrical voltages are present in the connector. Do not touch the outlet case with anything other than test probes until step 3 is completed.

INST 6.

DANGER

Electric shock. Hazardous voltages can be present in the ac line cord connectors.

CARR-TCU 1440, 1490.

DANGER

Hazardous electrical voltages are present. Do not touch the internal parts (pins and sockets) of the outlet until step 5 is completed.

INST 6.

DANGER

Hazardous electrical voltages are present. Do not touch the outlet before meeting the following requirements of steps 1 and 2.

INST 6.

DANGER

Hazardous voltages are present. If the measured voltage values are less than 1.0 V ac, you can touch the outlet. Avoid contact with the internal parts (pins and sockets) of the outlet.

INST 6.

DANGER

Dangerous voltages are present at the ac power cable socket. The safety cover must be on when the socket is not being used.

INST 10.

CAUTION:
TILT HAZARD. Do NOT open both drives of a tape transport unit that is not bolted to another tape transport unit or tape control unit. With the automatic cartridge feature installed and both drive drawers fully extended, a tape transport unit that is not bolted to another unit will tilt forward with about 20 lbs. of force applied to the top of either automatic cartridge loader.

INST 4, 11, 20, 135, 180.

INSP 15.

DANGER

Make sure the circuit breaker that supplies power to the customer receptacle is off.

If you are installing a Dual Tape Control Unit subsystem, power to both customer receptacles must be off.

INST 60.

DANGER

Lethal voltages are present in the power servicing area. Safety is most important. Treat all circuits as live until measured.

Capacitors are possible exploding devices. Wear safety glasses when working in the power area. Always install all safety covers before powering on the machine.

PWR 130-1, 400-1.

DANGER

High Voltage.

PWR 400-7.

Tab List

Volume A01

GLOSS	Glossary
PLAN	Maintenance Plan
INTRO	TA90 Introduction
START	Start Maintenance
CART	Cartridge Analysis
PNEU	Pneumatic Analysis
MSG	Errorlog messages
INST	Installation/Removal
INSP	Safety Check Procedures
INDEX	Index

Volume A02

PWR	Power Maps
SENSE	Sense/Status
PANEL	Panel
CE/HSC	Customer Engineering Panel/HSC Diagnostics
LOC	Locations
CARR-TCU	Tape Control Unit Checks/Adjustments/Removal/Replacement

Volume A03

CARR-DR	Drive Checks/Adjustments/Removal/Replacement

Volume A04

LGND	Legend
SPROC	Support Procedures
MD/SDISK	Maintenance Device/MD Support Diskette Procedures
DIAG	Support Diagnostic Descriptions
DF	Data Fields and Registers
OPER	Theory of Operation

Volume A05

FSI	Fault Symptom Index
EAD	Error Analysis Diagrams

Glossary and Abbreviations

This glossary defines the special terms, abbreviations, and acronyms that are used in this publication.

This glossary includes definitions from:

- The *American National Dictionary for Information Processing*, published by the Computer and Business Equipment Manufacturers Association. This material is reproduced from the American National Dictionary for Information Processing, copyright 1977 by the Computer and Business Equipment Manufacturers Association, copies of which may be purchased from the American National Standards Institute, 1430 Broadway, New York, New York 10018. These definitions are identified by an asterisk (*).
- The *ISO Vocabulary of Data Processing*, developed by the International Standards Organization, Technical Committee 97, Subcommittee 1. Definitions from published sections of this vocabulary are identified by the symbol "(ISO)" preceding the definition. Definitions from draft proposals and working papers under development by the ISO/TC97 vocabulary subcommittee are identified by the symbol "(TC97)," indicating that final agreement has not yet been reached among its participating members.

access method. A technique for moving data between processor storage and input/output devices.

adj. Adjustment.

allocation. See *resource allocation.*

alter. To change.

amplifier. A device whose output is an enlarged reproduction of its input.

analog. Pertaining to data in the form of continuous variables, which are related to measurable physical quantities.

ANALYZE/ERROR. The VMS command that invokes ERF.

ASCII. American National Standard Code for Information Interchange.

assigning a device. The establishing of the relationship of a device to a running task, process, job or program.

assignment. The naming of a specific device to perform a function.

assistance. Aid.

asynchronous. Pertaining to events that are scheduled as the results of a signal asking for the event; pertaining to that which is without any specified time relation.

att. Attachment.

available. One state of a mass storage device used on the STI bus. When powered on, the device is considered available (but not online) to any controller in a configuration.

backhitch. A slight motion in the backward direction just before moving tape in a forward direction.

backup. To make additional copies of documents or software for safekeeping, in case the original copy is accidentally damaged or destroyed.

BCC. Buffer channel command register.

BCPC. Buffer channel pad counter register.

BCPH. Buffer channel pointer high register.

BCPL. Buffer channel pointer low register.

BCR. Buffer channel remainder register.

BCSE. Buffer channel status/error register.

BCSH. Buffer channel stop high register.

BCSL. Buffer channel stop low register.

BCSS. Buffer channel storage sars register.

BDAT. Buffer data not real register.

BDC. Buffer device command register.

BDG0. Buffer diagnostic 0 register.

BDG1. Buffer diagnostic 1 register.

BDPH. Buffer device pointer high register.

BDPL. Buffer device pointer low register.

BDR. Buffer device remainder register.

BDSE. Buffer device status/error register.

BDSS. Buffer device storage sars register.

beginning-of-tape (BOT). The location on a magnetic tape that indicates the start of the permissible recording area.

bfr. Buffer.

BM/bill of materials. A list of specific types and amounts of direct materials expected to be used to produce a given job or quantity of output.

BMR. Buffer mode register.

BOB. Beginning-of-block.

BOC. Bus-out check.

BOM. Bill of materials

boot. To bring a device or system to a defined state where it can operate on its own. See also *bootstrap.*

bootstrap. To cause an operating system to load itself and prepare itself.

BOR. Beginning-of-record.

BOT. Beginning-of-tape.

bpi. Bits per inch.

BSB. Backspace block.

BSF. Backspace file.

buffer. * A routine or storage used to compensate for a difference in rate of flow of data, or time of occurrence of events, when transferring data from one device to another.

bus. A group of signal lines that convey information from source to destination. There may be many destinations, but only one source at a given time.

BWRP. Buffer wrap register.

CA. Channel adapter.

card extractor. A field engineer tool.

Card. Logic card (Board).

CARR. Checks-Adjustments-Removal-Replacement.

CART. Cartridge Analysis.

CAUTION (Notice). A word to call attention to possible personal harm to people. Contrast with *DANGER.*

CB. Circuit breaker.

centimeter. One hundredth of a meter. See *meter.*

CCA. Channel card address register.

CCB. Communication control block.

CCC. Channel card control register.

CCR. Channel command retry.

ccw. Counterclockwise.

CCW. Channel command word.

CDR. Channel data register.

CDTI. Channel diagnostic tag-in register.

CE. Customer engineer; field engineer

CE Panel. Hand held diagnostic tool.

CER. Channel error register.

channel command. An instruction that directs a data channel, control unit, or device to perform an operation or set of operations.

char. Character.

checklist. A list of items to be checked.

CHK. Check.

CHL. Channel.

CHPID. Channel path identification.

clk. Clock.

cluster. A collection of processors called nodes, attached to each other by a high-speed bus.

cm. Centimeter.

CMD. Command.

CMR. Channel modifier register.

command. A control signal that initiates an action or the start of a sequence of actions.

concurrent. Refers to diagnostic procedures that can be run on one tape control unit while the rest of the subsystem remains available for customer applications.

contaminant. Something that contaminates.

contingent connection. A connection between a channel path and a drive caused when a unit check occurs during an I/O operation.

control unit. A device that controls input/output operations of one or more devices.

controller. The part of a mass storage system responsible for interfacing between drives and host computers.

CP. Circuit protector.

CPS. Cycles per second. See *Hz.*

CRC. Cyclic redundancy check.

Glossary and Abbreviations GLOSS 1

CRR. Channel request register.

CS. Control storage.

CSC. Customer Support Center

CST. Command status table.

CSW. Channel status word.

CTO. Channel tag out.

ctr. Counter.

ctrl. Control.

CU. See *TCU*.

CUA. Channel unit address.

CUT. Control unit operations table.

DANGER (Notice). A word to call attention to possible lethal harm to people. Contrast with *CAUTION*.

data. * Any representations such as characters or analog quantities to which meaning is, or might be, assigned.

data buffer. The storage buffer in the tape control unit. This buffer is used to increase the data transfer rate between the tape control unit and the channel.

data check. A synchronous or asynchronous indication of a condition caused by invalid data or incorrect positioning of data. Some data checks can be suppressed.

DBI. Data buffer in.

DBO. Data buffer out.

dc. Direct current.

DCB. Data control block.

DCK. Data check.

DCR. Device control register.

DE. device end.

degauss. To demagnetize an object.

degradation. A decrease in quality of output or throughput, or increase in machine error rate.

degraded. Decreased in quality of output or throughput or increased machine error rate.

demark. Mark to show that the buffer segment is not usable.

deserialize. To change from serial-by-bit to parallel-by-byte.

designed. Has as a purpose.

detent. A mechanical device for holding moving parts in position.

detented. Held in position by a detent.

DEV. Device.

DF. Data Fields and Registers.

DGHELO. Diagnostic hardware error log.

DGOVLY. Diagnostic overlay log.

DIAG. Diagnostic.

DIDO. Data in data out bus.

DIR. Device interrupt register.

direct access storage. (1) * A storage device in which the access time is in effect independent of the location of the data. (2) (TC97) A storage device that provides direct access to data. (2) See also *immediate access storage*.

DLR. Device level register.

DOT. Device operation table.

Double-stick cellophane tape. Cellophane tape that has adhesive on both sides of the tape.

drive, magnetic tape. (ISO) A mechanism for moving magnetic tape and controlling its movement.

DSC. Device secondary clock register.

DSE. Data security erase.

DSE (register). Device status and error register.

DSH. Control unit serial high register.

DSL. Control unit serial low register.

DSR. Device secondary register.

DTR. Device tag register.

dual porting (dual access). Ability of a disk or tape drive to be accessed by two controllers.

EAD. Error Analysis Diagrams.

EBCDIC. Extended binary-coded decimal interchange code.

EC. Edge connector. Engineering change.

ECC. Error correction code.

ECO. Engineering change order.

EDF. Extented Data Format (Improved Data Recording Capability)

elsewhere. To or at another place.

end of block (EOB). A code that marks the end of a block of data.

end of file (EOF). A code that marks the end of a file of data.

end of tape (EOT). The end of the recording area on a tape.

EOB. End of block.

EOF. End of file.

EOJ. End of job.

EOR. End of record.

EOT. End of tape.

EPO. Emergency power off.

EQC. Equipment check.

EQU. Equate.

equipment check. An asynchronous indication of a malfunction.

ERA. Error register A register.

ERB. Error register B register.

ERF. A VAX/VMS utility that selectively reports the contents of an error log file.

ERG. Erase gap.

ERPA. Error recovery procedure action.

Error log. A binary file that is used to record hardware and software failures and a selected amount of context of the failure.

exchange. (1) The act of removing an old or imperfect part and installing a new or perfect part. (2) Contrast with *swap*.

explosive. Can explode or cause to explode.

F. Fuse.

fault symptom code (FSC). A hexadecimal code generated by the drive or tape control unit microcode in response to a detected subsystem error. This code is used as an MG entry point by the field engineer.

FE. Field engineer; customer engineer.

FEALD. Field Engineering automated logic diagram.

field replaceable unit (FRU). An assembly that is replaced in its entirety when any one of its components fails.

FIFO. First in first out.

file. * (ISO) A set of related records, treated as a unit, for example, in stock control, a file could consist of a set of invoices.

file protection. Prevention of the destruction of data recorded on a volume by disabling the write head of a unit.

FIPS. Federal Interface Processing Standard.

firmware. Software that is stored in a fixed (wired-in) or 'firm' way, usually in a read-only memory; a set of instructions designed to help hardware perform its assigned functions.

format. * (ISO) The arrangement or layout of data on a data medium.

formatter. Part of a magnetic tape subsystem that performs data conversion, speed matching, encoding, first level error recovery, and interfaces to one or more tape transports.

FP. File protect.

frayed. Damaged as if by an abrasive substance.

FRU. Field replaceable unit.

FSB. Forward space block.

FSC. Fault symptom code.

FSF. Forward space file.

FSI. Fault symptom index.

functional. Of, connected with, or being a function.

Functional microcode. Microcode that is resident in the machine during normal customer operation.

FVP. Functional verify program.

GMP. Good Machine Path

gnd. Ground. A voltage reference point in a system that has zero voltage potential.

g. Gram.

hertz (Hz). Unit of frequency. One hertz equals one cycle per second.

hex. Hexadecimal.

HV. High voltage.

Hz. Hertz (cycles per second).

I/O. Input/output.

IBG. Interblock gap.

ID. Identification.

identifier. That difference by which one thing can be distinguished from another.

ILEXER. HSC diagnostic that simultaneously exercises up to 12 tape drives. ILEXER does not provide for fault isolation.

ILTAPE. HSC diagnostic that tests a specific tape formatter dedicated to the test.

ILTCOM. An inline compatibility test for tapes possibly written on different system and different drives.

IML. Initial microprogram load , same as *boot*.

immediate access storage. * A storage device whose access time is negligible in comparison with other operating times.

IMR. Interrupt mask register.

inertia. Tendency to remain at rest or continue in the same direction.

initial microprogram load (IML). The action of loading a microprogram from an external storage to writable control storage ; see *bootstrap*.

INST. Installation.

interblock gap (IBG). (1) * An area on a data medium to indicate the end of a block or physical record. (2) (TC97) The space between two consecutive blocks on a data medium.

interface. * A shared boundary. An interface might be a hardware component to link two devices, or it might be a portion of storage or registers accessed by two or more computer programs.

intervention required. Manual action is needed.

INTLK. Interlock.

INTRO. Introduction.

ips. inches per second.

irrecoverable error [n.]. (1) (TC97) An error that makes recovery impossible without the use of recovery techniques external to the computer program or run. (2) In item (1), the recovery techniques would be external to those that are incorporated, not only within the program that failed but also within the system, and would include human action such as analysis by a program support representative.

ITA. Interval timer A register.

ITB. Interval timer B register.

ITC. Interval timer C register.

JAL. Jump address low register.

JAH. Jump address high register.

K. (1) * When referring to storage capacity, two to the tenth power; 1024 in decimal notation. (2) Kelvin.

kb. Kilobyte; a unit of 1024 bytes.

land pattern. Wires and connections on or below the surface of a circuit board.

LD. Load.

LED. Light-emitting diode.

LGND. Legend.

load point. See *beginning of tape*.

LOC. Locations.

locate block. A subsystem operation in which a tape is moved so that a specific block is available for processing.

LRC. Longitudinal redundancy check.

LSB. Least-significant bit.

LSI. Large scale integration technology.

LSP. Local storage page register.

LSR. Local storage register.

LWR. Loop write-to-read.

m. Meter.

M/T. Multiple track.

magnetic recording. * (ISO) A technique of storing data by selectively magnetizing portions of a magnetizable material.

magnetic tape. (TC97) A tape with a magnetizable surface layer on which data can be stored by magnetic recording.

maintenance agreement. A contract between Digital and a customer for supplying service to the customer.

maintenance package. The maintenance aids that Digital supplies for servicing the TA90 subsystem.

MAP. Maintenance analysis procedure.

mask. * (ISO) (1) A pattern of characters that is used to control the retention or elimination of portions of another pattern of characters. (2) To use a pattern of characters to control the retention or elimination of portions of another pattern of characters.

master file. * (ISO) A file used as an authority in a given job and that is relatively permanent, even though its contents may change. Synonymous with main file.

MCR. Maintenance control register.

MD. Maintenance device. Microcode diagrams.

MDA. Maintenance device adapter.

MDD. Maintenance device display.

MDI. Maintenance data in register.

MDO. Maintenance data out register.

media capacity. The amount of data that can be contained on a storage medium, such as tape, expressed in bytes of data.

meter (m). A unit of measure equal to 0.9144 yard.

MG. Maintenance Guide

MICR. Micro instruction register.

micro. One millionth of.

MICRO. Microcode.

microcode. (1) One or more micro instructions. (2) A code, representing the instructions of an instruction set, implemented in a part of storage that is not program-addressable. (2) To design, write, and test one or more micro instructions. (3) See also *microprogram*.

microdiagnostic routine. A program that runs under the control of a supervisor, usually to isolate field replaceable units.

microdiagnostic utility. A program that is run by the customer engineer to test the machine.

micro instruction. A basic or elementary machine instruction.

microprogram. * (1) (ISO) A sequence of elementary instructions that corresponds to a specific computer operation, that is maintained in special storage, and whose execution is started by the introduction of a computer instruction into an instruction register of a computer. (2) A group of micro instructions that, when executed, performs a preplanned function.

Note: The term microprogram represents a dynamic arrangement or selection of one or more groups of micro instructions for execution in order to perform a particular function. The term microcode represents micro instructions used in a product as an alternative to "hard-wired" circuitry to implement certain functions of a processor or other system component.

microprogram load. See *initial microprogram load*.

milli. One thousandth of.

millimeter. One thousandth part of a meter.

MLC. Machine level control.

mm. Millimeter.

modifier. That which changes the meaning.

mount a device. To assign an I/O device by means of a request to the operator.

MP. Microprocessor.

MPL. Microprogram load.

ms. Millisecond.

MSB. Most-significant bit.

MSG. Message.

MTE. Multiple track error.

MTI. Maintenance tag in register.

MTO. Maintenance tag out register.

multipath. Pertaining to using more than one path.

nano. One billionth part of.

N/A. Not applicable.

net wire list. A list that shows the wiring connections for the logic boards.

net. Network.

network. The interconnection of electrical components.

node. Intelligent entities in a distributed computing configuration.

NOP. No operation.

NRZI. Non-return-to-zero change-on-ones recording.

ns. Nanosecond.

OCP. Operator control panel; contains any switches and indicators necessary to provide operator information and control over the drive.

offline. (TC97) Pertaining to the operation of a functional unit without the continual control of a computer. Contrast with *online*.

online. (TC97) Pertaining to the operation of a functional unit that is under the continual control of a computer. Contrast with *offline*.

OP. Operator panel.

OPER. Operation.

osc. Oscillator.

oscillator. A device that periodically varies a voltage.

OSU panel. Operator setup panel.

outstanding. Waiting for processing.

ov. Over voltage.

overrun. Loss of data because a receiving device is unable to accept data at the rate it is transmitted.

owner. One who owns something.

parameter. * (ISO) A variable that is given a constant value for a specified application and that may denote the application.

part. Part number.

p bit. Parity bit.

PC. Parity check.

PCR. Processor control register.

PDR. Processor diagnostic register.

PE. Parity error.

PER. Processor error register.

PG. Parity generator.

pgm. Program.

PGID. Path group identification.

PGM (map). Path group map.

PGT. Path group ID table.

PLAN. Maintenance Plan.

PM. Preventive maintenance.

PNEU. Pneumatics.

pneumatic. The parts of the subsystem that control the pressurized air and vacuum.

polling. (1) A process in which the microcomputer interrogates certain command or status registers, one at a time, to determine if service is required. (2) A process in which the STI-FIPS adapter sequentially senses each drive, one at a time, to check for a change of status.

POR. Power-on reset.

primed. Pertaining to a condition of a tape drive when the controlling computer has addressed the drive but the drive was not in a ready state.

PS. Power supply.

PSR. Processor status register. Program support representative.

PST. Product support trained.

PT. Product trained.

PWR. Power.

R/W. Read/write.

RAM. Random access memory.

Random access memory. See *direct access storage*.

RCR. Read control register.

RD. Read.

RDB. Read backward.

RDC. (1) Read diagnostic control register. (2) Remote Diagnosis Center.

RDF. Read forward.

RECL. Record length.

reconnect. To physically or electrically put back together.

record. * (ISO) A collection of related data or words, treated as a unit; for example, in stock control, each invoice could constitute one record.

recording density. The number of bits in a single linear track measured per unit of length of the recording medium.

recoverable error. (1) An error condition that permits continued execution of a program. (2) Contrast with *irrecoverable error*.

ref. Reference.

reg. Register.

reinstall. To put back the original part that was removed.

remove. To take a part off of the machine.

RER. Read error register.

resource allocation. (ISO) The assignment of the facilities of a data processing system for the accomplishment of jobs.

resume. To continue.

retry. To attempt again.

REW. Rewind.

ROS. Read-only storage.

RPM. Revolutions per minute.

RPR. Read pattern register.

RRC. Read residual count register.

RSR. Read status register.

RUN. Rewind-unload.

SAR. Storage address register.

SB. Sense byte.

SCR. Silicon-controlled rectifier.

SDR. Statistical data recorder. Storage data register.

s. Second(s) of time.

saturate. To completely fill.

sel. Select.

segment. A part.

SERDES. Serializer/deserializer.

serialize. To change from parallel-by-byte to serial-by-bit.

serializer. (ISO) A device that converts a space distribution of simultaneous states representing data into a corresponding time sequence of states.

SR. Service Representative, see also *CE*.

servo [n.], servos. An adjectival noun for use in qualifying some part or aspect of a servomechanism.

servomechanism [n.]. * A feedback control system in which at least one of the system signals represents mechanical motion.

special feature. A feature that can be ordered to enhance the capability, storage capacity, or performance of a Digital product, but is not essential for its basic work.

SNERRH. Sense error history table.

SNS. Sense.

SPEAR. Standard Package for Error Analysis and Reporting

SS. Status store.

ST. Store.

standard feature. The significant design elements of a Digital product that are included as part of the fundamental product.

START. Start maintenance.

STI. Standard tape interconnect

Stoplock. A position-hold mode used when the tape is in a stopped position and under tension.

subsystem. A secondary or subordinate system, usually capable of operating independently of, or asynchronously with, a controlling system.

SUPP. Support.

swap. (1) The act of interchanging two identical field-replaceable units within the same machine for test purposes. (2) Contrast with *exchange*.

sync. Synchronous, synchronize.

synchronous. (1) (ISO) Pertaining to two or more processes that depend upon the happening of specific events such as common timing signals. (2) Occurring with a regular or predictable time relationship.

tach. Tachometer.

tachometer. A device that emits pulses that are used to measure/check speed or distance.

tailored. Changed to meet individual specifications.

tape cartridge. A container holding magnetic tape that can be processed without separating it from the container.

tape void. An area in the tape in which no signal can be detected; may be caused by a machine failure.

TB. Terminal board.

TCC. Top-card connector.

tape cartridge. A container holding magnetic tape that can be processed without separating it from the container.

tape void. An area in the tape in which no signal can be detected; may be caused by a machine failure.

TB. Terminal board.

TCC. Top-card connector.

TCU. Tape Control Unit

tension [n.]. (1) The force tending to produce elongation. (2) The condition of being stretched.

thread/load operation. A procedure that places tape along the tape path.

TI. Tape indicate.

TIE. Track in error.

TM. Tapemark.

tp. Test point.

TTU. Tape Transport Unit

TU. Tape Unit.

TUBI. Tape unit bus in.

TUBO. Tape unit bus out.

UEPO. Unit emergency power off.

unload. Prepare the tape cartridge for removal from the drive.

utilities. Utility programs.

Utility programs. (1) * (ISO) A computer program in general support of the processes of a computer; for instance, a diagnostic program. (2) a program that enables the field engineer to maintain (or prepare to maintain) data or other programs.

uv. Under voltage.

VAXsimPLUS. VAX system integrity monitor; an interactive error reporting tool.

VES. Volume error statistics.

virtual circuit. A logical connection path between two nodes in a cluster.

volume. (ISO) A certain portion of data, together with its data carrier, that can be handled conveniently as a unit.

VOM. Volt ohmmeter.

VRC. Vertical redundancy check.

WARNING (Notice). A word to call attention to possible damage to a program, device, or system. Contrast with *CAUTION*.

WCR. Write control register.

word. (1) (ISO) A character string that is convenient for some purpose to consider as an entity. (2) In TA90 and VAX, 16 bits, or 2 bytes.

WSE. Write status/error register.

WRITE. Write command.

WTM. Write tape mark.

XR. External register.

XRA. External register address register.

Glossary and Abbreviations GLOSS 5

Glossary and Abbreviations GLOSS 6

This page intentionally left blank.

Glossary and Abbreviations GLOSS 6

Contents

TA90 Maintenance Summary 5
Special Tools and Test Equipment 5
DC Test Tool 5
Card Extractor 5
Tape Removal Tool 5
Pressure/Vacuum Gauge 5
Pressure/Vacuum Kit 5
ESD Grounding Wrist Strap Tool 6
Cleaning Cartridge 6
Leader Block Replacement Kit 6
Attachment Tool 6
Clutch Tool 6
Hose Clamp Tool 6
File Protect Gauge 6

Maintenance Information Description 10
Volume A01--Maintenance Procedures 10
GLOSS 10
PLAN 10
INTRO (Introduction) 10
START 10
CART (Cartridge) 10
PNEU (Pneumatics) 10
MSG (Message) 10
INST (Installation/Removal) 10
INSP (Safety Check Procedures) 10
INDEX 10
Volume A02--Maintenance Procedures and Tape Control Unit Checks, Adjustments, Removals and Replacements 10
PWR (Power) 10
SENSE 10
PANEL 10
CE/HSC (CE Panel, HSC) 10
LOC (Locations) 10
CARR-TCU (Tape Control Unit Checks, Adjustments, Removals, and Replacements) 10
Volume A03--Drive Checks, Adjustments, Removals, and Replacements 10
CARR-DR (Drive Checks, Adjustments, Removals, and Replacements) 10
Volume A04--Support Procedures 10
LGND (Legend) 10
SPROC (Support Procedures) 10
MD/SDISK (Support Diskette Procedures) 10
DIAG (Support Diagnostics) 10
DF (Data Fields) 11
OPER (Theory of Operation) 11
Volume A05--Error Analysis Diagrams 11
FSI (Fault Symptom Index) 11
EAD (Error Analysis Diagrams) 11

TA90 Maintenance Package Summary 25

Main Menu display 30

TA90 Product Support Summary 50

Procedures 55
Take Offline 55
How to Take a Drive Offline (Single or Dual Subsystem) . 55
How to Take a Tape Control Unit Offline (Single or Dual Tape Control Unit Subsystem) 55
Intermittent Failures 55
Scoping (Using Oscilloscope) 65

TA90 Maintenance Summary

The TA90 maintenance package has two parts, the maintenance diskettes and the TA90 Maintenance Guide manual.

The TA90 maintenance package supplies two diskettes. GMP (concurrent) diagnostics are resident on the TCU functional diskette. Non-concurrent ("standalone") diagnostics are resident on the TCU support diskette.

There is a third diskette available for use with the maintenance device (MD) for area support. This diskette contains subsystem display and alter controls, support utility programs, and microcode patch programs.

Special Tools and Test Equipment

DC Test Tool

This tool (PN 29-27465-01) is shipped with the subsystem. Use this tool to determine if subsystem power supplies are supplying output voltages. See PWR 10 or PWR 12 for a description of this tool and a description of how to use it.

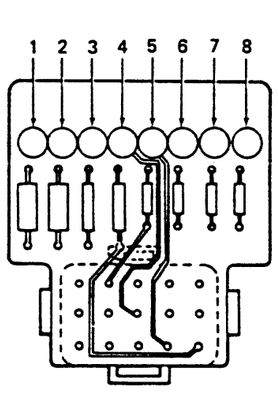

DC Test Tool

Card Extractor

This tool (PN 29-27466-01) is shipped with the subsystem. It is used to remove logic cards from the subsystem.

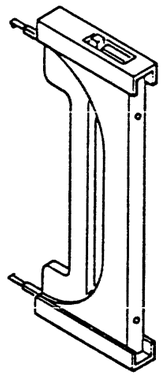

Card Extractor

Tape Removal Tool

This tool (PN 29-27467-01) is shipped with the subsystem. Use it to rewind tape into the cartridge when the tape must be rewound by hand. See CART 12 for instructions on how to use the tape removal tool.

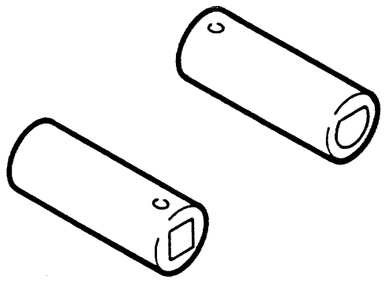

Tape Removal Tool

Pressure/Vacuum Gauge

This tool (PN 29-27268-01) is used to measure the pneumatic system pressure or vacuum. See PNEU 5 for instructions on how to use the pressure/vacuum gauge.

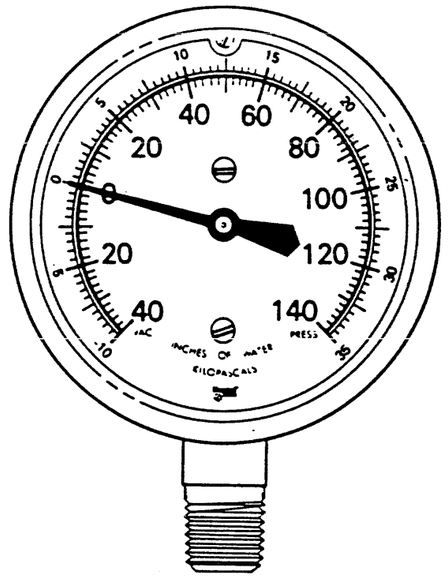

Pressure/Vacuum Gauge

Pressure/Vacuum Kit

This kit contains hoses, fittings and the Pressure/Vacuum gauge (shown above) for measuring the pneumatic system pressure or vacuum. This kit is not shipped with the subsystem and must be ordered.

ESD Grounding Wrist Strap Tool

This tool (use the most current part number available) is used to prevent damage when you work with electrostatic discharge (ESD) sensitive parts. See CARR-TCU 1-9 or CARR-DR 1-9 for information on using the ESD grounding wrist strap tool. This tool is shipped with the subsystem.

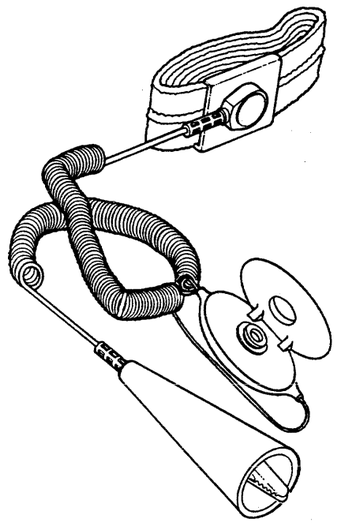

Cleaning Cartridge

This tool (PN 30-30326-01) is used to clean the head guide assembly. To use, load the cartridge on a drive, and the cleaning procedure occurs automatically. The cartridge unloads when the cleaning procedure is done. This tool is shipped with the subsystem.

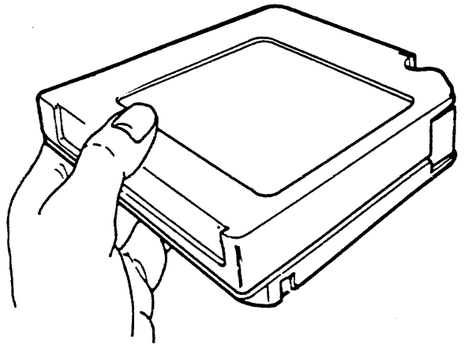

Leader Block Replacement Kit

The Leader Block Replacement Kit (PN 29-27468-01) is shipped with the subsystem. It includes the clutch tool and the attachment tool. See Cart 20 for information on using these tools.

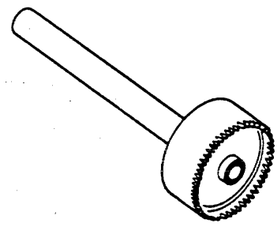

Figure 1. Clutch Tool

Figure 2. Attachment Tool

Hose Clamp Tool

This tool (PN 29-27469-01) is used to clamp various air pressure hoses for use in FRU isolation and for concurrent maintenance. See CARR-DR 3-1 for information on how to use the hose clamp tool. This tool is shipped with the subsystem.

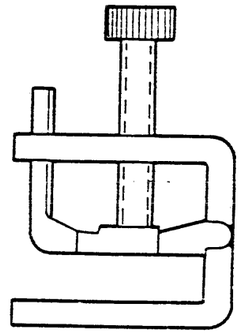

File Protect Gauge

This tool (PN 29-27470-01) is used to adjust the file protect switch to ensure correct contact is made with the tape cartridge. This tool is shipped with the subsystem.

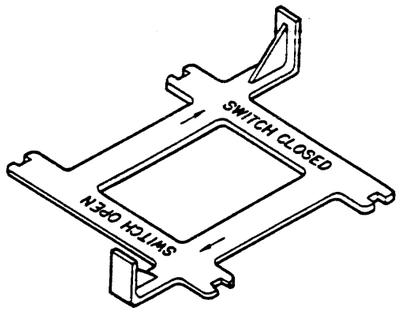

Figure 3. File Protect Gauge

Maintenance Guide Description

This section describes the TA90 Maintenance Guide and explains how to use the maintenance guide to repair the TA90.

The maintenance guide (MG) is a five-volume manual that supplies maintenance procedures and theory of operation information. This information is contained in the following five volumes:

- A01--Maintenance procedures
- A02--Maintenance procedures and tape control unit checks, adjustments, removals, and replacements
- A03--Drive checks, adjustments, removals, and replacements
- A04--Support procedures
- A05--Error analysis diagrams.

Each volume of the maintenance guide is divided into sections that are marked with tabs for quick identification and access. The following describes the sections contained in each of the maintenance guide volumes.

Volume A01 — Maintenance Procedures

The sections contained in this volume supply maintenance procedures and repair information needed to diagnose and repair the TA90.

GLOSS

This section supplies descriptions of terms and abbreviations used in the TA90 Maintenance Guide. Use this section to look up the meaning of any word or abbreviation that you do not understand.

PLAN

This section (the section you are now using) describes the TA90 Maintenance Guide, supplies a summary of the maintenance package, and explains how to use the maintenance guide to repair the TA90. Use this section to learn what aids the maintenance package supplies and how to use the maintenance package to service the subsystem.

INTRO (Introduction)

This section supplies a summary of the TA90 Magnetic Tape Subsystem, describes the tape cartridge, and describes the subsystem features. Use this section to learn what the subsystem consists of and what it does.

START

This section supplies the initial entry into the maintenance package. It contains problem-finding procedures that guide the field engineer to a diagnostic or repair procedure. Use this section to start your analysis of a problem. This section aids you in analyzing the problem or instructs you to use the CE Panel to analyze the problem.

CART (Cartridge)

This section contains analysis and error-recovery procedures for tape cartridge problems. The START section or the CE panel will send you to the CART section to perform specific repair procedures.

PNEU (Pneumatics)

This section supplies analysis procedures to isolate failures in the pneumatic system. The START section or the CE panel will send you to the PNEU section.

MSG (Message)

This section describes the error log messages and VAXsimPLUS summaries. It contains examples of error log printouts and explains how to use the information. Use this section to analyze the printouts from the error log report program. This analysis will send you to the correct entry in the START section.

INST (Installation/Removal)

This section supplies the information necessary for you to install or remove the subsystem. Use this section when the customer wants the subsystem (or a machine from the subsystem) installed, removed, or relocated.

INSP (Safety Check Procedures)

This section supplies the safety check procedures to ensure that a machine that has not been under a Digital Maintenance Contract has the needed safety items installed and that no other changes were made to make it unsafe.

INDEX

This section supplies an alphabetic list of key words and phrases in maintenance information volumes A01, A02, A03, A04, and A05. Use this section to find the subject you want.

Volume A02 — Maintenance Procedures and Tape Control Unit Checks, Adjustments, Removals, and Replacements

The sections contained in this volume supply maintenance procedures and repair information needed to diagnose and repair the TA90 and the removal and replacement procedures for all FRUs in the tape control unit.

PWR (Power)

This section contains the MAPs to isolate failures in the power areas. It also contains voltage reference tables and charts, wiring diagrams, and a description of the dc test card. The START section or the CE panel will send you to the PWR section to analyze power failures.

SENSE

This section supplies summary charts and descriptions of the subsystem sense bytes and the channel status byte. This section describes how to analyze the sense bits. Use this section to determine the correct entry point to the START section .

PANEL

This section describes the switches and indicators on the tape control unit and tape transport unit panels, and supplies tape drive operating instructions. Use this section to learn the function of the tape control unit and tape transport unit panels. You can also use this section for directions about performing operations as instructed by the START section .

CE/HSC

This section describes the maintenance device (MD), MD messages, and MD menus. Instructions on how to use the MD are provided. use of the CE Panel and HSC to run subsystem diagnostics and GMP. Use this section to learn about the CE Panel and how to use it with the TA90 subsystem.

LOC (Locations)

This section shows the location of FRUs, assemblies, and parts in the tape control unit and tape transport unit. Use this section to find the locations of items you are sent to by other sections of this manual.

CARR-TCU (Tape Control Unit Checks, Adjustments, Removals, and Replacements)

This section supplies the removal and replacement procedures for all FRUs in the tape control unit. The check or adjustment procedures are included. At the front of the section is a list of all FRU numbers, which you can use for FRU identification and to find required procedures. Use this section when the START section instructs you to check, adjust, or exchange a FRU in the tape control unit.

Volume A03 — Drive Checks, Adjustments, Removals, and Replacements

This volume contains the section that supplies the drive removal and replacement procedures.

CARR-DR (Drive Checks, Adjustments, Removals, and Replacements)

This section supplies the removal and replacement procedures for all FRUs in the tape transport unit. The check or adjustment procedures are included. At the front of the section is a list of all FRU numbers, which you can use for FRU identification and to find required procedures. Use this section when the START section instructs you to check, adjust, or exchange a FRU in the tape transport unit.

Volume A04 — Support Procedures

The sections contained in this volume supply diagnostic procedures and information, theory of operation, microcode data field, and register information to aid you in diagnosing problems.

LGND (Legend)

This section describes with graphics the symbols used in the maintenance guide. In addition, examples and descriptions of logic, net wire, and voltage pin lists are supplied. Use this section to learn how to read the diagrams in the maintenance package.

SPROC (Support Procedures)

This section provides a step by step procedure for entering and using the support maintenance package. It reminds you of what error data is available and gives hints on analyzing that data.

MD/SDISK (MD Support Diskette Procedures)

This section describes the MD support diskette procedures and gives directions on using the maintenance device (MD) to display registers, run the trace program, and do other support MD operations that are resident on the support diskette.

DIAG (Support Diagnostics)

This section contains a description of the diagnostic control program and the diagnostic tests resident on the TCU Support diskette.

Maintenance Information Description (Continued)

DF (Data Fields)

This section describes the tape control unit and drive microcode data fields, logs, and registers that are useful to you in diagnosis of subsystem hardware failures.

The data field definitions are predominantly used to define bit meanings within a register or field when EADs make reference to them. Additionally, support diagnostics display register contents, and the data fields section can be used to define their meanings.

OPER (Theory of Operation)

This section supplies the theory information necessary to understand subsystem operations. Included are card, command, and data flow descriptions.

Volume A05 – Error Analysis Diagrams

This volume contains a Fault Symptom Index (FSI) and Error Analysis Diagrams (EAD) that are used to diagnose problems when detailed troubleshooting is necessary.

FSI (Fault Symptom Index)

This section contains a listing of error codes generated by the tape control unit or drive. A description of each error code, a FRU list associated with the error code, and troubleshooting references are provided. Use this section when you are sent here by the Support Procedures to diagnose problems that were not corrected by running GMP.

EAD (Error Analysis Diagrams)

This section contains error diagrams, error condition theory, and troubleshooting guides for error codes that are generated by the tape control unit or drive. Use this section when you are sent here by the FSI for diagnosing problems that were not corrected by running GMP.

TA90 Maintenance Package Summary

The flowcharts on pages PLAN 30 through PLAN 51 show the process that the maintenance package follows to lead you to a repair. The flowcharts do not make up a repair procedure. The repair procedure is completely contained in the sections starting at START.

PLAN 30 shows the process up to the selection of the GMP.

PLAN 35 shows the process the maintenance package follows for an interrupted service procedure. PLAN 35 also shows the procedure that the maintenance package follows when you want to test the subsystem for correct operation.

PLAN 50 and PLAN 51 describe the maintenance package tools available to the service representative with support education.

TA90 Maintenance Package Summary (Continued) **PLAN 30**

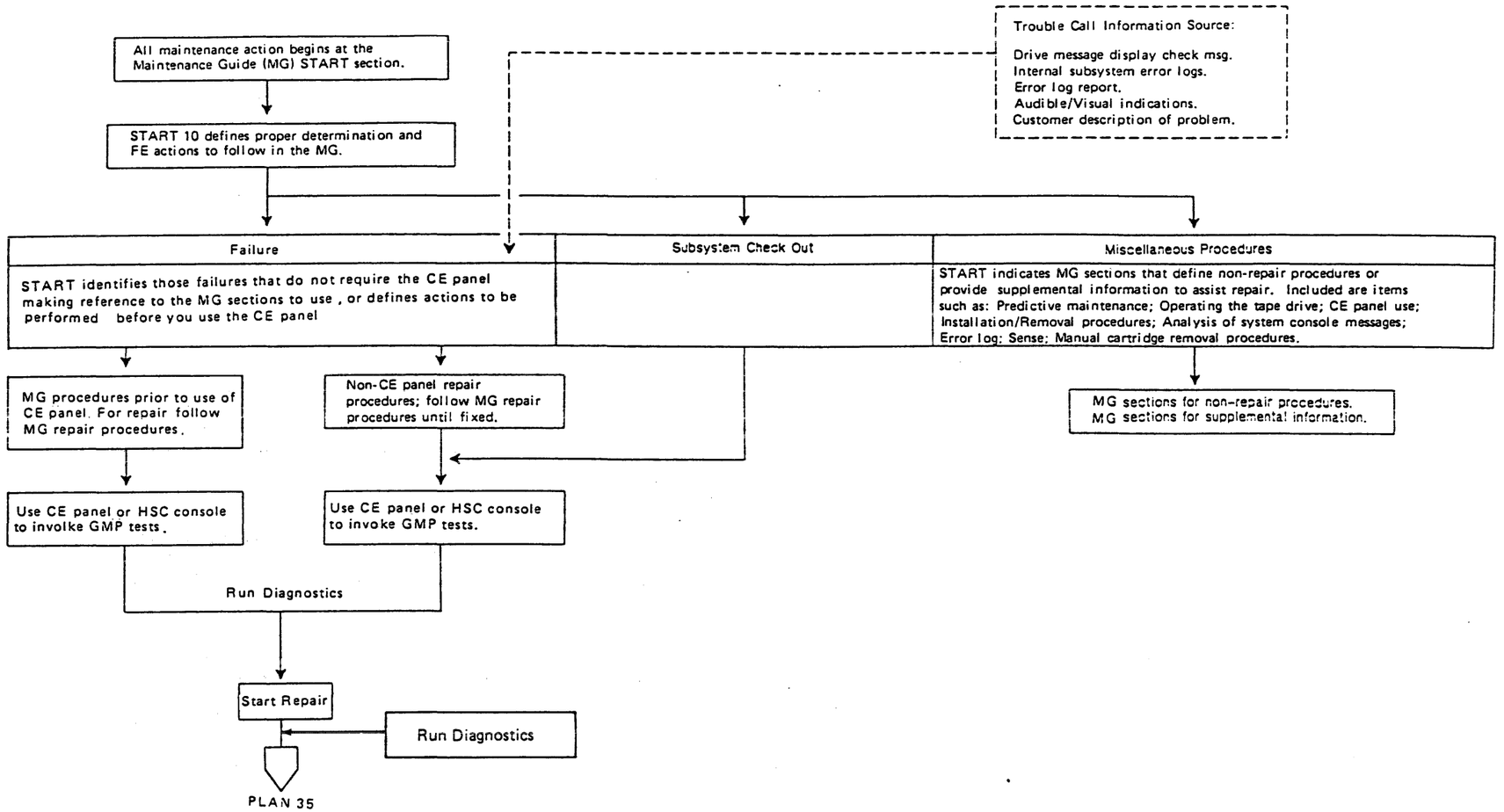

TA90 Maintenance Package Summary (Continued) **PLAN 30**

TA90 Maintenance Package Summary (Continued)

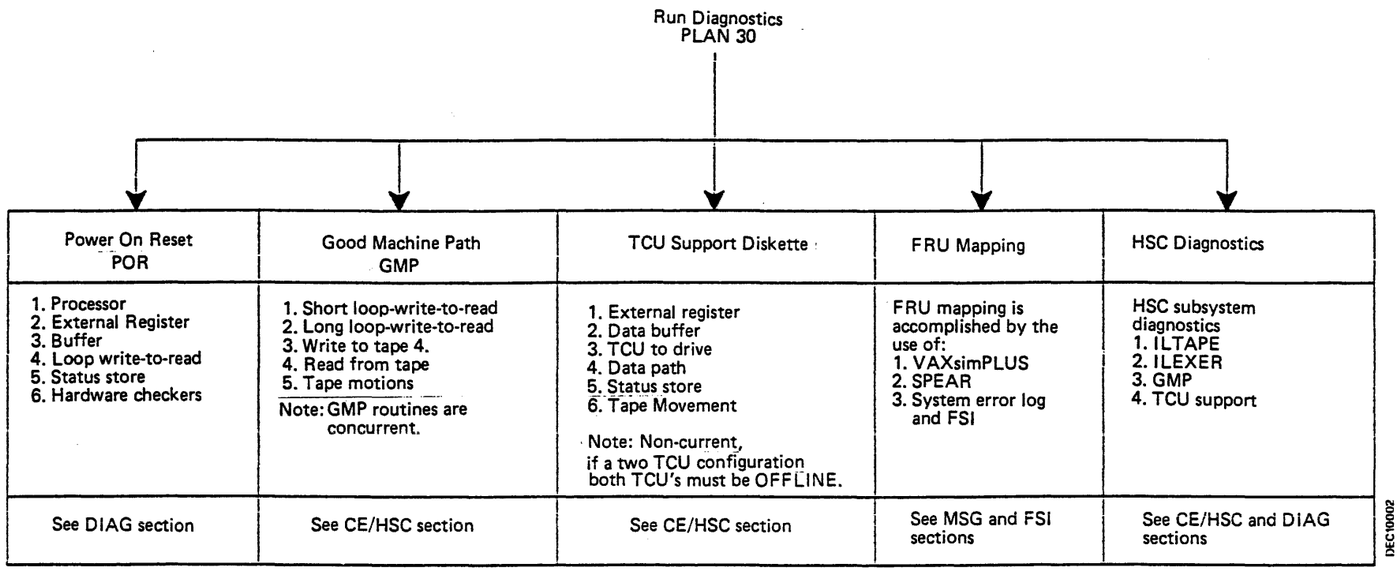

TA90 Maintenance Package Summary (Continued)

Note: Registers displayed by programs/diagnostics on the support diskettes are useful in isolating hardware failures and are explained in the DF (Data Fields) section. See "Contents" on DF 1.

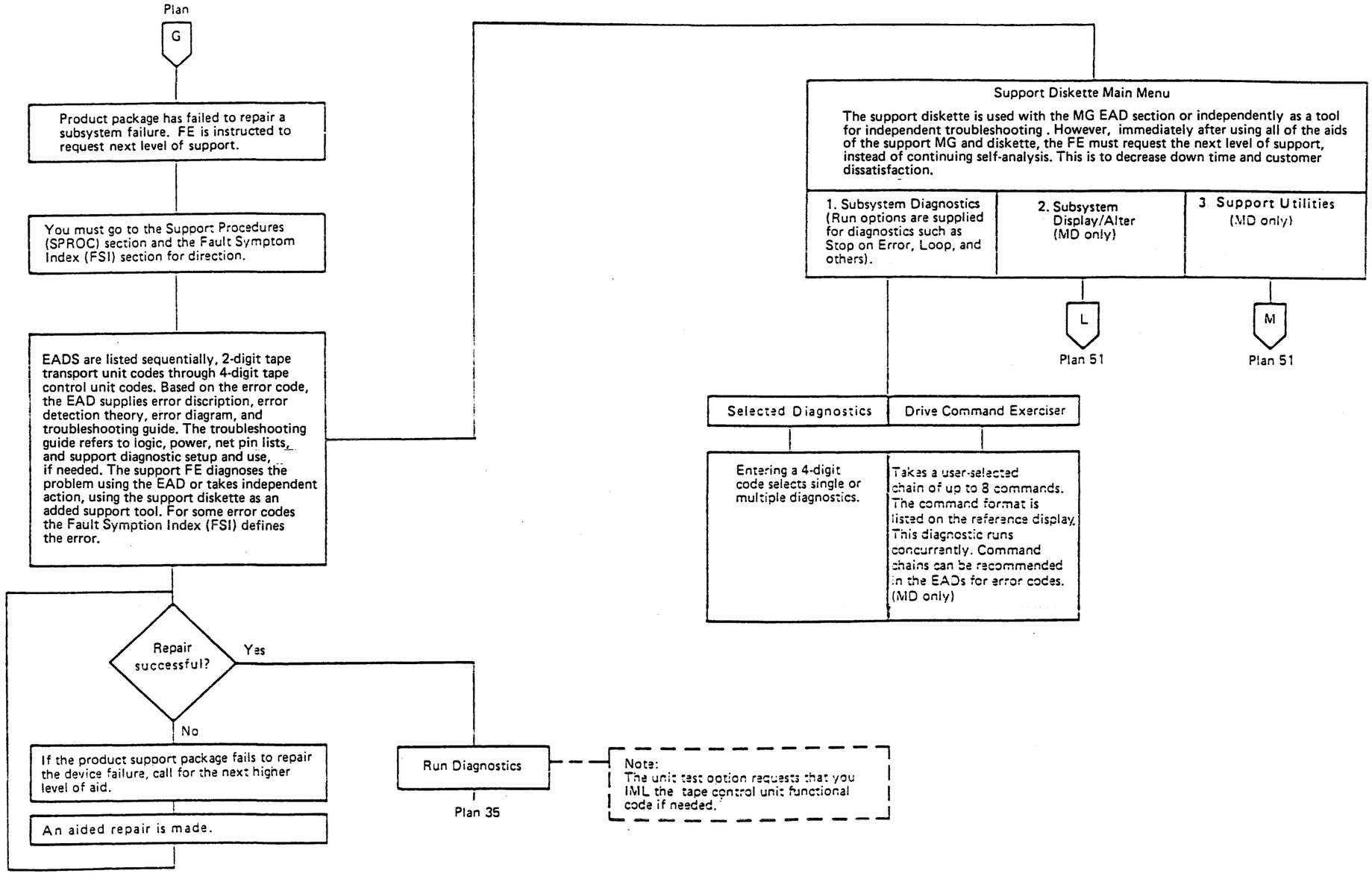

Plan 50

L

1. Storage Display/Alter	2. Register Display/Alter
Supplies access to the tape control unit tables, tape control unit storage, channel storage, status storage, and drive storage.	Supplies access to the tape control unit and drive external registers and local storage registers, and the tape control unit scan ring

Plan 50

M

1. Tape control unit trace/match control	2. Microprocessor control	3. Tape control unit subsystem dump
Prompts the user for setup data. Action taken at the time selected errors occur.	Permits control operations in these areas: maintenance adapter registers and microprocessor, control storage, and maintenance adapter commands.	Dump files can be written for the tape control unit and drives, in long or short format. Dump files are written on the support diskette.

Product maintenance adapter registers	Microprocessor commands	Control storage commands	Product maintenance adapter commands
Displays the follow-registers: MCR, MSB, MTI, ADR, and D REG.	Provides microprocessor control similar to an SR panel. (For example: stop, step, start, reset, etc.)	Allows control storage read and write operations.	Allows product maintenance adapter control via commands. (For example: set address, comp sync/stop, ignore errors, etc.)

Procedures

Dismount Procedures

Before you perform a maintenance action on a drive, the drive address must be offline to the operating system. Before you perform a maintenance action on a tape control unit, all drives attached to the tape control unit must be offline to the operating system in a single tape control unit configuration or have the paths offline for all drives in a dual tape control unit configuration. Failure to do so could affect customer operations.

How to Take a Drive Offline (Single or Dual Tape Control Unit Subsystem)

Have the customer:

1. Deallocate all of the systems that have access to the drive.
2. Dismount each of these addresses offline to the operating system.

Be sure to verify that the customer has completed the offline procedure before starting the maintenance procedure.

How to Take a Subsystem Offline (Single or Dual Tape Control Unit Subsystem)

Have the Customer:

1. Deallocate all channel paths that have access to the subsystem.
2. Dismount all channel path addresses, to each drive that is attached to the tape control unit, offline to the operating system.

   Be sure to verify that the customer has completed the offline procedure before starting the maintenance procedure.

Do the following:

1. Switch the tape control unit Online Test/Offline Test switch to the Offline Test position.

   Note: A delay can be expected because the Offline green LED does not light until all channel processes have stopped.

2. If the Offline green LED does not light, press the IML/Reset switch to the Reset position.

   Note: Check with the customer to ensure that the subsystem has been taken offline completely before pressing Reset.

Procedures PLAN 55

Scoping (Using Oscilloscope)

An oscilloscope, Tektronix [1] 454A, 475, or equivalent, may be used.

Set the oscilloscope controls as follows:

Use a X10 probe, sync = auto, volts = 1 volt/cm, sweep = as required.

1. Probe the points as directed by the MAPs.
2. If the MAP indicates the UP light is on, the line level should be in the up signal level area. See the voltage signal levels below.
3. If the MAP indicates the DOWN light is on, the line level should be in the down signal level area. See the voltage signal levels below.
4. If the MAP indicates the light is flashing, the line level should be changing between up and down level. Ensure that the up and down levels are within limits. See the voltage signal levels below.

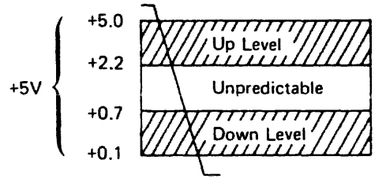

[1] Trademark of Tektronix, Inc.

Procedures (Continued)

Procedures (Continued) PLAN 65

Contents

Introduction to the TA90 Subsystem 5
Operating Characteristics 5
Optional Features 5
Operating Systems 5
Physical Characteristics 5
Cartridge 10
Drive Message Display 10
Addressing 10
Initial Microprogram Load (IML) 10

Introduction to the TA90 Tape Control Unit 15
Tape Control Unit Diagram 15
Data Buffer 20
Write Data Flow Card 20
Read Control 20
Maintenance Adapter 20
Status Store and Status Store Communication 20
Microprocessor and Control Storage 20
Power 20
  Voltage Regulator 20
  Power-On-Reset and Undervoltage Detector 20
Writing Data 22
  Buffered Write Mode 22
  Tape Write Mode 22
Reading Data 22
Single Tape Control Unit Subsystem Diagram 25
Channel Adapter 30
STI-FIPS Adapter 30
Drive-Adapter 30
Read Data Bus 30
Dual Tape Control Unit Subsystem Diagram 35
Dual Tape Control Unit 40
  Drive Attachment 40

Introduction to the TA90 Tape Transport Unit 45
Tape Transport Unit Diagram 45
Power 50
Pneumatic Supply 50
Drive Logic 50
  Drive Control Card 50
    Microprocessor 50
    Digital Servo 50
    Adapter 50
  Message Display 50
  Write Card 50
  Read Preamplifier Card 50
  Power Amplifier Board 50
  Loader Control Card 50
Drive Transport Assembly 51
  Tape Loading and Unloading 51
  Motion Control 51
  Stoplock Positions 51
  Tape Transport Sensors 51

Introduction to Channel Commands 55
  Channel Command Summary 55

Introduction to the TA90 Subsystem

The TA90 is a high performance buffered magnetic tape storage subsystem.

The subsystem consists of a Tape Control Unit and up to four Tape Transport Units. Each tape transport unit contains two drives. Therefore, each tape control unit can have a maximum of eight drives connected to it. By adding the Dual Tape Control Unit Communication feature, a second tape control unit and up to four tape transport units can be connected to the first tape control unit to form a two-tape control unit, sixteen-drive subsystem.

The TA90 subsystem attaches to the HSC/HSX controller. The STI-FIPS Adapter card interconnects the FIPS-60 interface of the tape control unit with the STI interface bus. The TA90 subsystem attaches to the VAX processors via the HSC/HSX.

The TA90 provides dual porting capability at all levels—Transport, Tape Control Unit and STI-FIPS adapter.

Operating Characteristics

Some of the subsystem operating characteristics are:

- A compact design with front loading
- A small reel of half-inch tape enclosed in a compact cartridge for greater tape protection
- Automatic tape threading
- A tape control unit with a 1024K-byte data buffer and a microprocessor that controls the data flow within the subsystem
- A Dual Tape Control Unit Communication feature that has the ability to interconnect two tape control units into a single subsystem configuration
- A drive with microprocessor control that moves tape without capstans or vacuum columns
- A message display panel for each drive that provides visual information for the operator or service representative.

Operating Systems

The programming support for the subsystem is provided within the following operating systems and their future extensions:

- VMS
- ULTRIX

Optional Features

The TA90 Subsystem has the following optional feature:

- Improved Data Recording Capability

The TA90 tape drive has the following optional feature:

- An automatic cartridge loading feature that handles up to six cartridges that load and unload automatically.

Physical Characteristics

Dimensions

- Tape Control Unit:

  Height: 1.000 m (39.37 in.)
  Width: .660 m (25.98 in.)
  Depth: .750 m (29.53 in.)

- Tape Transport Unit:

  Height: 1.000 m (39.37 in.)
  Width: .517 m (20.11 in.)
  Depth:
  Without Automatic Cartridge Loaders, .750 m (29.53 in.)
  With Automatic Cartridge Loaders, .930 m (36.63 in.)

Recording Media

- Tape cartridge

  Tape width: 12.7 mm (0.5 in.)
  Mean usable tape length: 154 m (505 ft.)

Tape Transport

- Type: Reel-to-reel, automatic self threading
- Number of tracks: 18
- Reading speed: 2000 mm/sec (78.7 in./sec)
- Load time:
  Without Automatic Cartridge Loaders, 5 to 10 seconds.
  With Automatic Cartridge Loaders, 7 to 30 seconds
- Unload time: 5 to 10 seconds
- Rewind speed: 4000 mm/sec (157 in./sec)
- Rewind time: maximum 48 seconds.

Cartridge

The drive uses a compact cartridge that has a nominal data capacity of 200 megabytes.

The tape cartridge remains closed during storage and handling to protect the tape from external contaminants. When a cartridge is inserted into a drive, the drive automatically pulls the tape from the cartridge and threads it onto a fixed machine reel.

Each cartridge has a physical file protect selector. When the selector is set to file protect, data is prevented from being written on or erased from tape. For additional cartridge information see the CART section.

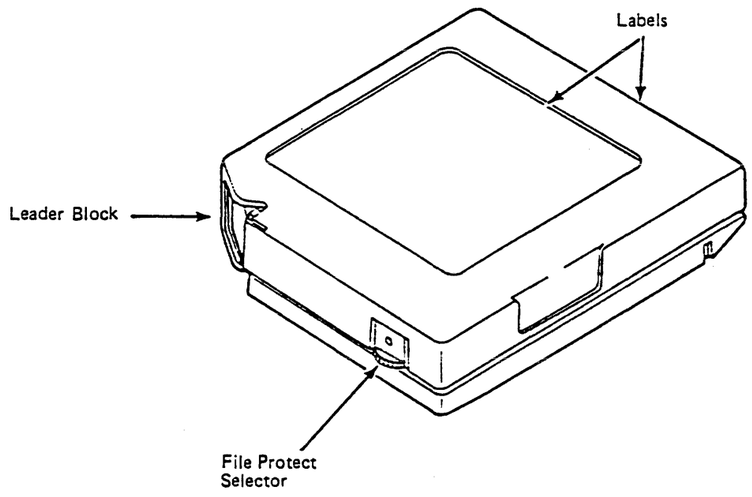

Drive Message Display

Each drive has an operator panel on the top of the tape transport unit, which contains an eight-character visual message display. The operator panel is mounted on a swiveling fixture that can be adjusted by hand to make the message display visible from various operator positions.

The drive microprocessor, the error sensing logic, and the host software can cause the following types of messages to be displayed for the operator or the service representative.

- Error message
- Service representative information
- Drive status

Addressing

The drive addresses and tape control unit address are set during installation.

The tape control unit address can be either 0 or 1.

The drive address can be any value in the range of hexadecimal 0 through 7 for a single tape control unit subsystem (tape control unit 0). When dual control units are installed, the address can be any address within the range of hexadecimal 0 through F. However, all drives physically attached to a tape control unit must be addressed within the group of hexadecimal 0 through 7 or the group of hexadecimal 8 through F.

Two STI-FIPS adapter cards are included with each tape control unit, left (L) and right (R). The L adapter controls those drives attached to its TCU which have even drive address (not TCU unit numbers). The R adapter controls odd numbered drives. These numbers are set by thumbwheel switches located by the TTU bottom door.

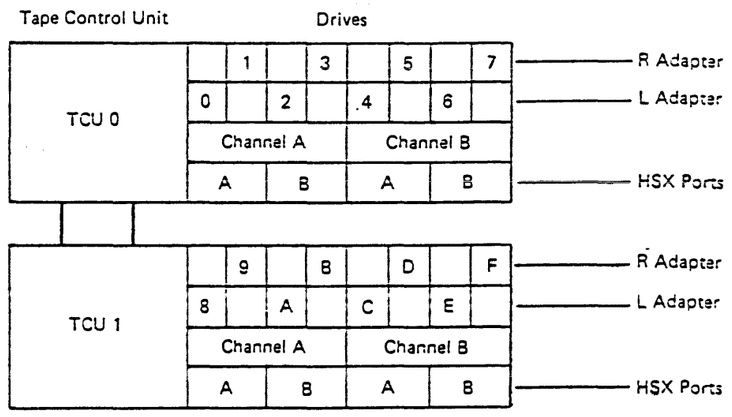

Initial Microprogram Load (IML)

During an IML, a microcode image that permits the subsystem to become functional is loaded into the tape control unit.

The IML diskette contains the microcode image and patches for the tape control unit. This diskette must be kept in the IML device at all times. The microcode image and patches contained on the IML diskette are related to the EC level of the tape control unit and attached drives, therefore, only the specific IML diskette designated for a tape control unit should be used in that tape control unit.

Anytime the tape control unit is powered on, or the IML button is pushed on an offline tape control unit, the tape control unit will attempt to IML itself from the diskette in its IML device. The IML device is also accessed when drive patches are loaded.

Note: Ensure following an IML command, that the tape control unit is in the online test position.

Introduction to the TA90 Tape Control Unit

The tape control unit, under control of the microprocessor, moves read and write data between the STI-FIPS adapter, the data buffer, and the attached drives. In addition, the tape control unit:

- Receives, interprets, and executes data commands from the STI-FIPS adapter
- Generates and sends control commands to the attached drives
- Processes read and write data into and out of the data buffer
- Schedules various I/O and drive operations
- Detects tape control unit errors
- Collects and sends sense and status information to the STI-FIPS adapter
- Stores the sense and status information for error recovery or analysis
- Performs stand alone error recovery on some subsystem failures.

Tape Control Unit Diagram

This is a high level drawing showing theory only. For detailed point-to-point wiring see the machine logics.

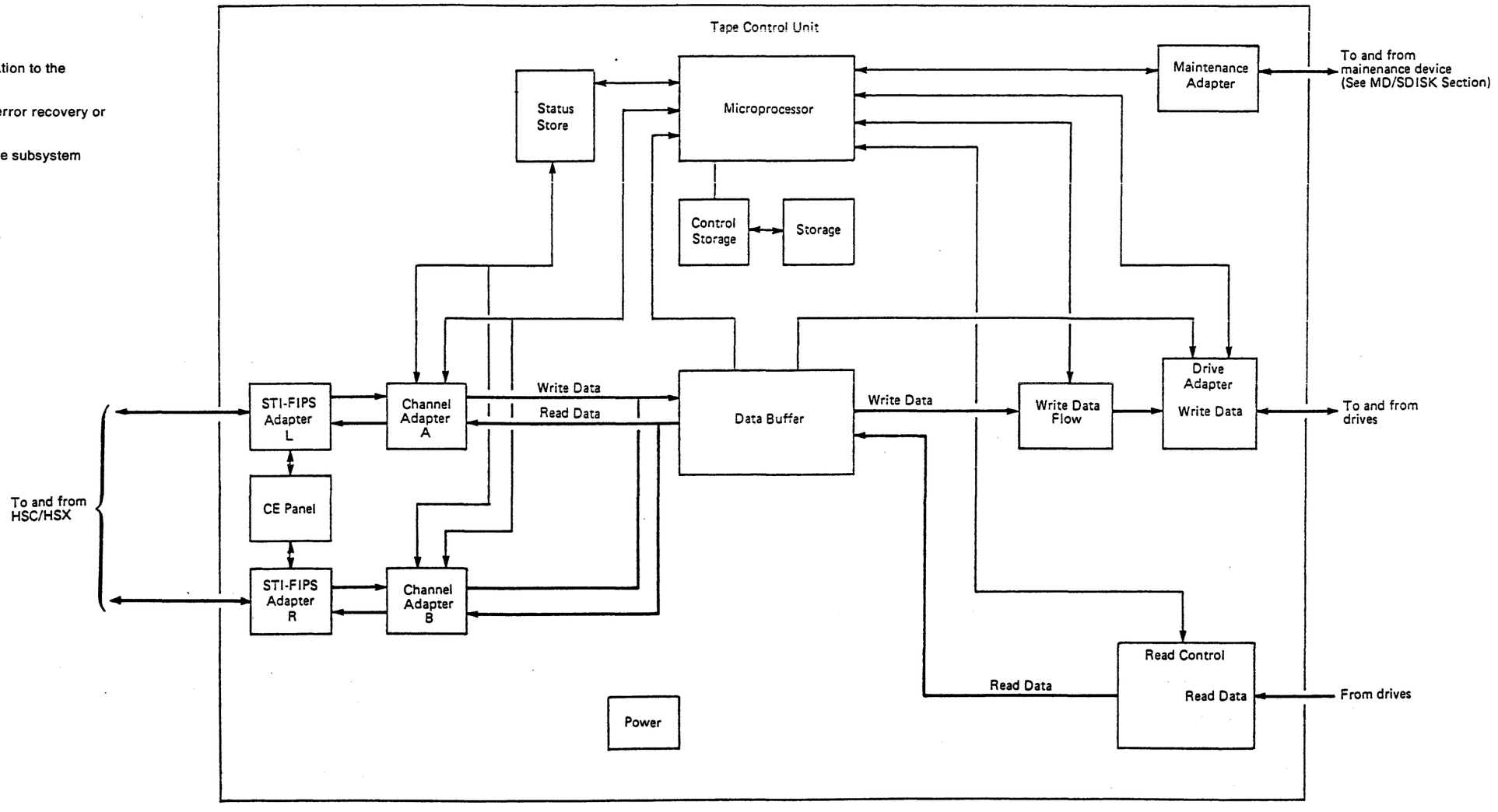

Data Buffer

The data buffer provides data buffering between the drives and the STI-FIPS adapter.

All data transferred between the STI-FIPS adapter and the tape control unit passes through the data buffer.

If Improved Data Recording Capability is installed, data is compacted before entering the buffer on a write operation and uncompacted after leaving the buffer on a read operation.

Write Data Flow Card

The write data flow card receives data that is to be written on tape from the data buffer. It contains the logic required to process and format the data and to control the write operation. It also generates clocking and parity lines that are transferred with the data to a selected drive through the tape control unit drive adapter.

Read Control

The read control area consists of:

- A read clock and format card
- A read ECC/correction card
- A read detect card
- Three read skew cards
- A read buffer card.

The read area receives data from the drive; interprets, verifies and formats the data; and transfers it to the data buffer.

Maintenance Adapter

The maintenance adapter (MA) card provides a means for the maintenance device (MD) to monitor and change the status of the tape control unit. The adapter logic permits the MD to communicate with the subsystem components, to load and run diagnostics, and to interrogate registers.

Note: The MD is used as an engineering support tool in the laboratory. It is used for integrating, testing, and debugging, as well as continuing product engineering.

Status Store and Status Store Communication

The status store provides a common storage area for status information in the tape control unit and contains the status of each drive. Drive status information is used by the microprocessor and channel adapter areas for allocation of common resources. The channel adapter and microprocessor use this drive status information to keep track of each drive's status. The status store communication card provides a communication path between tape control units when the dual-control-unit communication cables are installed.

Introduction to the TA90 Tape Control Unit (Continued)

Microprocessor and Control Storage

The microprocessor card contains the microprocessor, storage for the local store register, and associated logic for control of and communication with the other areas of the tape control unit. In addition, all processor related external registers, the external interrupt hardware, and most of the processor error detection and reporting logic are located on this card. The processor executes microprograms to control and monitor tape control unit activity through external registers that are accessed by way of the external register bus.

Control storage consists of tables accessible only by the microprograms and the microprocessor. It contains the initial microprogram load (IML) data that has been read from the IML diskette. Any time the microprocessor needs a microprogram to perform a function, it communicates with control storage to obtain the microprogram.

Power

The power area of the tape control unit consists of an AC power supply and two DC power supplies. The AC power supply furnishes power for the DC power supplies, the cooling fans, and the AC power for each of the tape transport units. The DC power supply PS02 furnishes dc power to the tape control unit only. The dc power supply PS03 furnishes power to the gate containing the STI-FIPS adapter cards. DC power for the tape transport units is developed within the tape transport units.

Voltage Regulator

The voltage regulator card, located in the 01A-A1 logic board controls the voltages needed for the storage cards in the tape control unit.

Power-On Reset and Undervoltage Detector

The power-on reset (POR) card contains POR and undervoltage circuitry. In addition to resetting the tape control unit circuitry power on, the POR and undervoltage pulses are used to provide POR to the channels and the STI-FIPS adapters . A POR during a power off clamps the channel interface off before power is lost. During a power-on sequence, the STI-FIPS adapter (Reset) is clamped off for approximately 800 ms to permit the voltages to stabilize.

Notes

Notes

Writing Data

Two modes of writing can be selected by the host system when using this subsystem: buffered write and tape write. When in **buffered write mode**, the tape control unit signals completion as soon as the data has been written correctly to the buffer. The subsystem does any error recovery required to physically write the data block on tape. **Tape write mode** is for writing critical, non-restartable data files.

Buffered Write Mode (Cached Operation)

When the tape control unit receives a write command from the channel in buffered write mode, write data is accepted from the STI controller and acknowledged. This frees the STI link for other operations while the data is transferred to the tape control unit, and eventually, the tape media. The tape control unit writes the buffered data blocks when the drive is available. This increases channel efficiency by freeing the channel before the data is written.

During cached operations, sending data between the STI-FIPS adapter and the tape control unit can occur simultaneously (can overlap) with data operations between the TA90 and its STI controller (HSX). Data can be loaded into the buffer for the next record while the current write operation finishes; drive motion is maintained and writing continues. This is called streaming.

Tape Write Mode

Tape Write Mode (Non-Cached Operation)

When the tape control unit receives a write command in tape write mode, it moves the data from the channel adapter into the buffer at channel speed. As soon as the drive is moving tape at recording speed the data is sent to the drive.

During non-cached operation, write data is accepted and transferred to the tape control unit, the drive, and the tape media. Acknowledgement is sent to the STI controller, making for ultra-reliable operation at the expense of time. Non-cached operations can be much slower than cached operations. Errors in writing to the tape media are reported in both cases.

Introduction to the TA90 Tape Control Unit (Continued)

Reading Data

Data is read from the drives into a tape control unit buffer. On STI read commands, records are requested from the TCU and are transferred to the STI controller (HSX). The STI-FIPS adapter prereads and maintains the next record to be read in its buffer.

Read Caching

For good performance, whenever STI read operations are performed, "read ahead" records are maintained in the adapter. This ensures the next record is immediately available.

Improved Data Recording Capability

The Improved Data Recording Capability feature supports both buffered and tape write modes but does not support read backward or synchronous write mode.

Introduction to the TA90 Tape Control Unit (Continued)

Introduction to the TA90 Tape Control Unit (Continued)

Single Tape Control Unit Subsystem Diagram

This is a high level drawing showing theory only. For detailed point-to-point wiring see the machine logics.

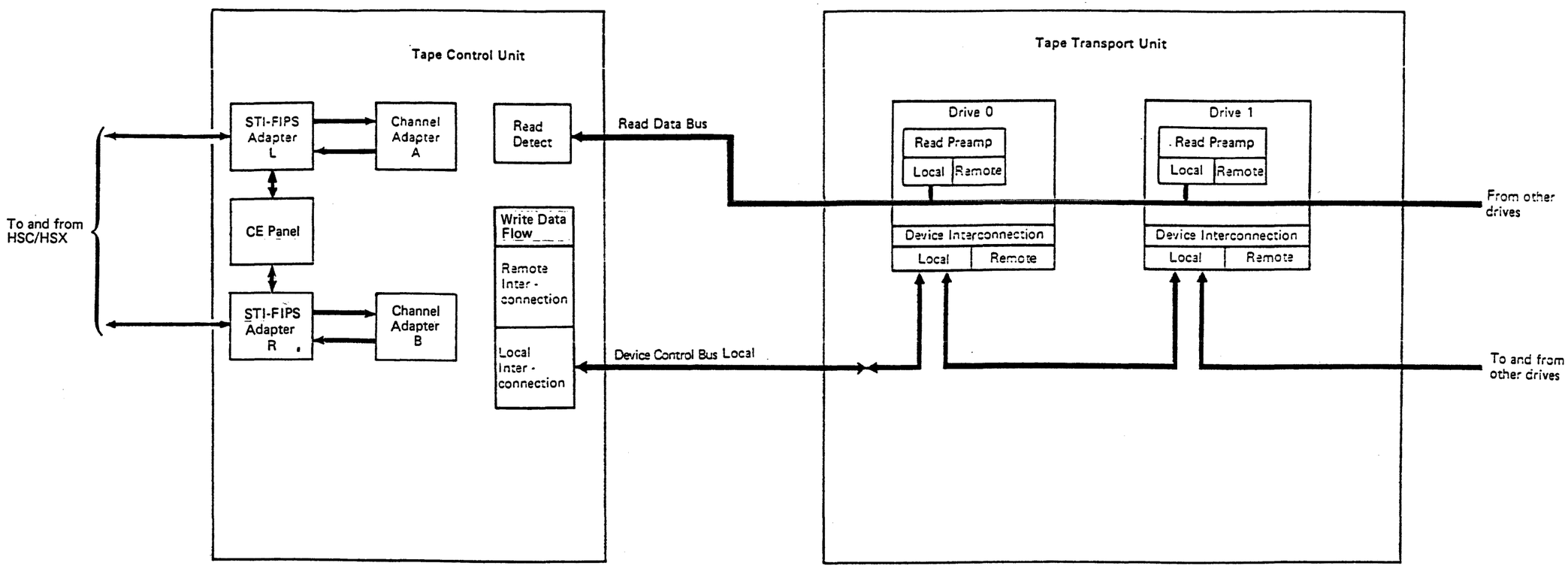

Channel Adapter

The tape control unit has two channel adapters as part of the base equipment.

The channel adapter connects the tape control unit to the STI-FIPS adapter. The STI-FIPS adapter has command retry capability .

The channel adapter moves data between the STI-FIPS adapter and the tape control unit buffer. Data is also compacted and uncompacted if the data compaction feature is installed. The following type of channel and its rate is used:

- **3 Megabyte Data Streaming:** The tape control unit clocks the data rate to 3.0 megabytes per second, ± 5 percent.

Each channel adapter operates as an asynchronous unit. It decodes all commands and provides initial status for each command. The channel adapter also causes the channel to disconnect, using channel command retry, if the command cannot be executed immediately.

When a channel adapter is processing an I/O operation for a specific drive, the other channel adapter in the tape control unit can process I/O operations for other drives.

STI-FIPS Adapter

The STI-FIPS adapters are housed within the tape control unit

Each tape control unit holds two adapters (L and R), as shown in the diagram on INTRO 15. Each STI-FIPS adapter:

- Receives, interprets, and executes STI commands from the STI controller (HSC or HSX)
- Generates and sends FIPS commands to the TCU
- Buffers data to be transferred to the TCU or STI controller
- Passes drive and tape control unit error information to the host for logging
- Records significant local errors in its own EEROM for use by Digital maintenance
- Converts drive addresses from the numbers set on the drives to unit numbers for a cluster.

Drive Adapter

The drive adapter provides the write data and control information path between the tape control unit and:

- One serial string of up to eight drives in a single tape control unit subsystem
- Two serial strings of up to eight drives each in a dual tape control unit subsystem.

The tape control unit drive adapter contains two interconnections, local and remote. In a single-tape control unit subsystem, the drives must be connected to the local interconnection. The remote interconnection is not used. In a dual-tape control unit subsystem, each tape control unit has one set of drives connected to the local interconnection and another set of drives connected to the remote interconnection.

The drives physically attached to a tape control unit are connected to that tape control unit's local interconnection. The drives physically attached to the other tape control unit are connected to the remote interconnection. Therefore, each drive is connected to the local interconnection on one tape control unit, and the remote interconnection on the other tape control unit, at the same time.

The primary drives attached to tape control unit 0 (TCU0) are addressed hexadecimal 0 through 7, and the primary drives attached to tape control unit 1 (TCU1) are addressed hexadecimal 8 through F. Drives 0 through 7 are attached to the local interconnection of TCU0, and the remote interconnection of TCU1. Drives 8 through F are attached to the local interconnection of TCU1 and the remote interconnection of TCU0.

The device control bus is a single flat cable that connects the tape control unit drive adapter to the drives. There is one device control bus for the drives attached to the local interconnection, and another device control bus for the drives attached to the remote interconnection. The device control bus is terminated at the last drive on a set of drives.

Note: Due to STI constraints, the STI-FIPS adapter can physically address only four drives. The "L" adapter interfaces with channel adapter A and addresses the even numbered drives locally (normally) connected to its TCU. The "R" adapter interfaces with channel adapter B and addresses the odd numbered drives locally (normally) connected to its TCU.

Read Data Bus

The read data bus sends analog read data from the drives to the tape control unit. The read data bus is a single flat cable that connects the drive read buffer directly to the tape control unit read clock/detect cards. The devices are connected to this bus similar to the way the devices are connected to the device control bus. The read data bus consists of two selectable groups, A and B. Each group has 18 line pairs that send the analog data on the 18 read data tracks to the tape control unit.

Introduction to the TA90 Tape Control Unit (Continued)

Dual Tape Control Unit Subsystem Diagram

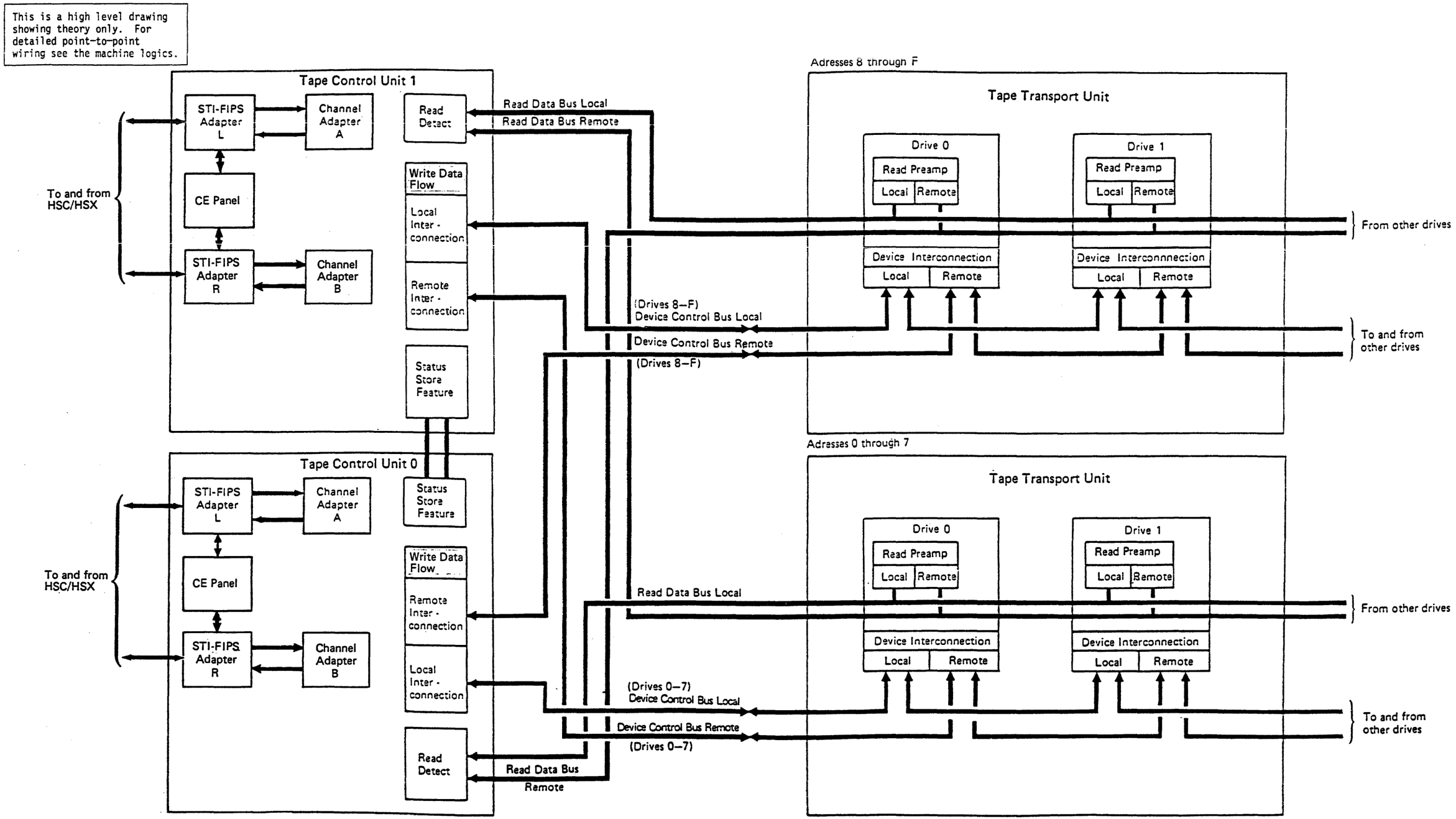

Introduction to the TA90 Tape Control Unit (Continued)

Dual Tape Control Unit

Two tape control units can be connected together for dual tape control unit operation. With dual tape control units, load balancing between the resources of the two tape control units is automatically performed under control of the microprocessors in the tape control units. When I/O operations are directed to a drive, they can be handled in either tape control unit, depending on the internal subsystem load.

Each tape control unit will have two channel adapters, permitting the entire subsystem to be accessible from a maximum of four STI paths. Each channel adapter on either tape control unit can communicate at full internal data path speeds with the data buffer in either tape control unit. While such data movement is going on, each tape control unit data buffer can also move data to or from a drive. Therefore, the entire dual-tape control unit subsystem can move data with four operations occurring at the same time. The microprocessors in each tape control unit agree and establish the internal data paths to be used between the drive and the STI path. This agreement is independent of VMS program control.

The status store communication card provides the tape control unit-to-tape control unit communication path. It also permits the two tape control units to share control and status information about all the drives in the subsystem.

Drive Attachment

The drives are attached to each tape control unit as shown in the following table:

TCU ID	ADAPTER	DR ADR	BUS
0	L	0,2,4,6	Local
0	R	1,3,5,7	Local
0	-	8-F	Remote
1	-	0-7	Remote
1	L	8,A,C,E	Local
1	R	9,B,D,F	Local

Introduction to the TA90 Tape Control Unit (Continued) INTRO 40

Introduction to the TA90 Tape Transport Unit

A tape transport unit consists of two drives (drive 0 and drive 1). The drives operate independently of each other, except for the shared use of the tape transport unit pneumatic supply and the tape transport unit dc power supply.

A drive, under control of the tape control unit:

- Receives, interprets, and performs data commands sent from the tape control unit
- Receives, interprets, and performs motion control commands sent from the tape control unit
- Sends and receives read and write data to and from the tape control unit
- Sends sense and status information to the tape control unit.

Tape Transport Unit Diagram

These are high level drawings showing theory only. For detailed point-to-point wiring see the machine logics.

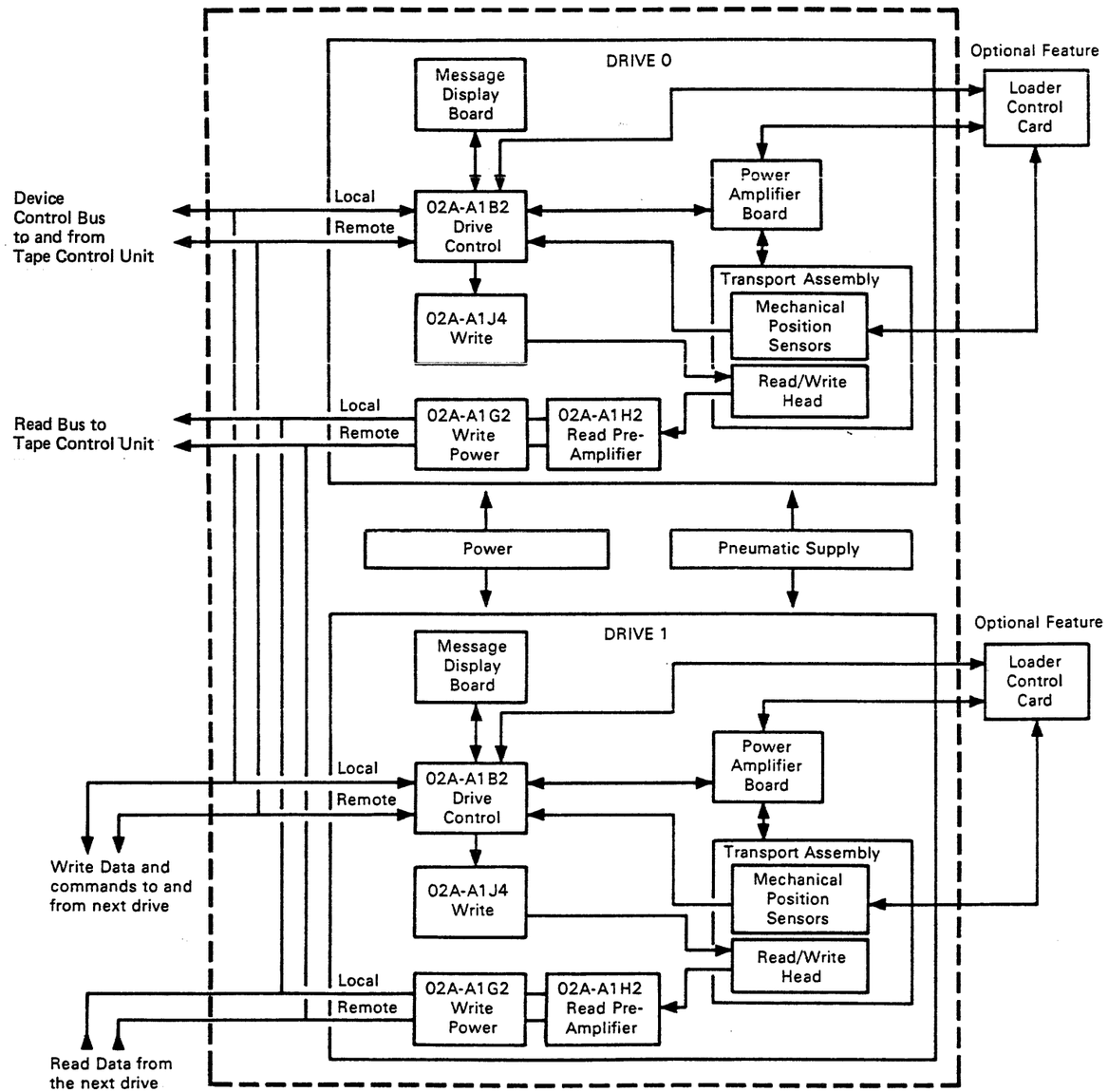

Power

The tape transport unit ac power is supplied by the tape control unit. Up to 4 tape transport units (8 drives) can be connected to a single tape control unit, and the ac power is cabled from the tape control unit to the first tape transport unit then cabled from that tape transport unit to the next tape unit and so on.

The dc power for the tape transport unit is developed in each tape transport unit's dc power supply. The dc power supply furnishes the dc power for both drives in that tape transport unit.

Pneumatic Supply

The tape transport unit contains one pneumatic supply that is shared by both drives. The pressure side of the pneumatic supply consists of a pump, a regulator, and an output filter. The vacuum side of the pneumatic supply uses the same pump and an inlet filter.

Drive Logic

The drive logic controls the data flow and tape motion within the tape transport unit.

Drive Control Card

The Drive control card controls all functions within the drive. Write data and commands are received by the adapter section and are passed, under control of the microprocessor section, to the digital servo section and the write card. Read data is read from the tape by the read head and sent to the read preamplifier card, under control of the digital servo section, as directed by the microprocessor section. All motion controls are controlled by the digital servo section, power amplifier card, and the microprocessor section.

Microprocessor Section

The microprocessor section of the drive control card contains the microprocessor, storage for the local storage register, and associated logic for control and communication.

Some external registers (XRs), the external interrupt hardware, and most of the processor error detection and reporting logic are located in this part of the card.

The microprocessor performs microcode to control and monitor control unit activity through the external registers, which are accessed by way of the external register interconnection.

Digital Servo Section

The digital servo section of the drive control card serves as a buffer and interconnection to and from the processor and the rest of the drive. The digital servo section gathers information from sensors, mechanical switches, and error lines from other cards in the drive and presents these to the drive processor.

Because the drive is a microprocessor based system operating in a real time mode and because tight control is needed to maintain proper tape tension and tape velocity, high speed control processing is required. The digital servo section is designed to relieve the processor of having to do certain simple housekeeping work.

Adapter Section

A drive can attach to one or two tape control units. The adapter section of the drive control card contains two buses and the controls that permit communication between the drive and one or both of the tape control units.

In the two-control-unit environment, only one tape control unit is permitted to communicate with a specific drive at any one time. The other tape control unit cannot access the drive until the first tape control unit has finished its operation.

Introduction to the TA90 Tape Transport Unit (Continued)

Message Display

The message display provides the operator with visual messages sent from the host processor or the tape subsystem. The message display, using eight LEDs and two bar LEDs, displays messages sent from the microprocessor through the digital servo.

Write Card

The write card contains the 18 write drivers, the head connector, parity checking circuits, and error checking circuits. The error checking circuits check for open head or head cable, shorted write drivers, and various other write problems.

Read Preamplifier Card

The read preamplifier card amplifies the 18 read signals generated at the read/write head. The card sends the read data to the tape control unit by way of read bus local or remote. The bus is selected by the tape control unit.

The read preamplifier card also provides isolation from the read bus when the drive is powered off.

Power Amplifier Board

The power amplifier board accepts digital current inputs from the processor through the digital servo, converts them to analog signals, and applies necessary gain and phase shifting to drive the reel motors.

The power amplifier board uses the input from the tension transducer to keep correct tension on the tape. The power amplifier board also controls power on, power off, and power-on reset.

Loader Control Card

The automatic cartridge loader - loader control card has its own microprocessor and storage. The storage is loaded from the tape control unit IML diskette using the "Patching Path" each time the drive patches are loaded. This code is used by the loader control card to control the functions within the automatic cartridge loader. The loader control card uses the information from sensors, mechanical switches, and cards in the drive to control the loading and unloading of the tape cartridge.

Introduction to the TA90 Tape Transport Unit (Continued)

Drive Transport Assembly

The drive transport contains the read/write head, the mechanical components, sensors, and motors necessary to thread the tape, and move the tape forward or backward. The microprocessor controls all mechanical motion in the drive transport, using the digital servo and power amplifier to change the digital signals into analog signals and to drive the motors. The sensors feed back information to the digital servo to indicate motion errors and tape position so the digital servo can modify the velocity or direction of tape motion. The sensors also signal irrecoverable tape motion errors.

Tape Loading and Unloading

On drives without the automatic cartridge loaders tape loading is an automatic operation. The operation starts after a cartridge has been inserted, latched in place, and the sensors in the tape transport have been checked by the sensor checking circuits of the digital servo.

On drives with the automatic cartridge loaders tape loading starts after a cartridge has been inserted, the load assembly cammed down to the load position, and the sensors in the tape transport have been checked by the sensor checking circuits of the digital servo.

To load tape, the threader arm pulls the leader block from the cartridge. After the threading operation begins, the machine reel is positioned so that it can receive the leader block. A tach pulse senses when the leader block is contained in the machine reel hub. Once the leader block is contained, the tape is moved to BOT.

BOT is the beginning-of-tape and is the first place that a record can be written on tape.

Tape unloading begins when the Unload switch is pressed with the Ready/Not Ready switch in the Not Ready position. Tape unloading can also result from a Rewind/Unload command. Tape rewinds onto the file reel at high speed until BOT is detected. At this point tape motion is slowed to permit the threader mechanism to pull the leader block from the machine reel and to remove the tape from the transport. The threader motor is driven clockwise until tape path sensor A is blocked, at which point the cartridge is automatically unlatched.

Note: On drives without the automatic cartridge loaders the cartridge latch should be closed when the tape drive is not being used. (A cartridge need not be in the drive.) When the tape drive is needed, open the cartridge latch by pressing the Unload switch.

Motion Control

The drive motion control logic is used for tape tension control, velocity control, backhitch (reposition) control, and stoplock (position) control.

The tension control function provides constant tape tension, essential for motion control.

The velocity control provides controlled acceleration up to recording speed or rewind speed, precise control of recording speed independent of the distribution of tape on the reels, and controlled deceleration. Control is provided for both forward and backward tape movement.

The stoplock (position-hold) condition is used when the tape is stopped and under tension.

Stoplock Positions

Once loaded, the drive maintains one of three stoplock positions in anticipation of the next command:

- Read forward stoplock, ready for a read forward.
- Read backward stoplock, ready for a read backward.
- Write stoplock, ready for a write.

All of these stoplock positions are achieved automatically by the drive and are based on the command just executed. At the end of a particular command where no similar command is immediately following, the drive always prepares for the next command to be performed to be of the same type as the last one. The drive therefore repositions to the correct stoplock to accomplish the next (like) command. The exception to this is a Backspace Block command, which repositions to the read forward stoplock to prepare for a subsequent Read command.

Tape Transport Sensors

Sensing devices in the drive transport area monitor tape velocity and tension, protection status of the tape, and loading and unloading operations. Transport monitoring is accomplished by:

- Cartridge present sensor, which indicates that a tape cartridge has been inserted into the drive.
- Cartridge latched sensor, which indicates that the cartridge is latched in place.
- Tape path sensor A, which indicates that the tape leader block is at the file reel.
- Tape path sensor B, which indicates when the tape leader block is at the machine reel.
- Machine reel tach sensor A, which senses the position of the machine reel. Machine reel tach sensor A is used in conjunction with machine reel tach sensor B to generate a tach pulse.
- Machine reel tach sensor B, which senses the position of the machine reel. Machine reel tach sensor B is used in conjunction with machine reel tach sensor A.
- Tension transducer, which senses tension of the tape. The microprocessor uses the tension transducer to control the reel motor power amplifiers.
- File reel tachometer (tach 2), which monitors speed and direction of the file reel motor.

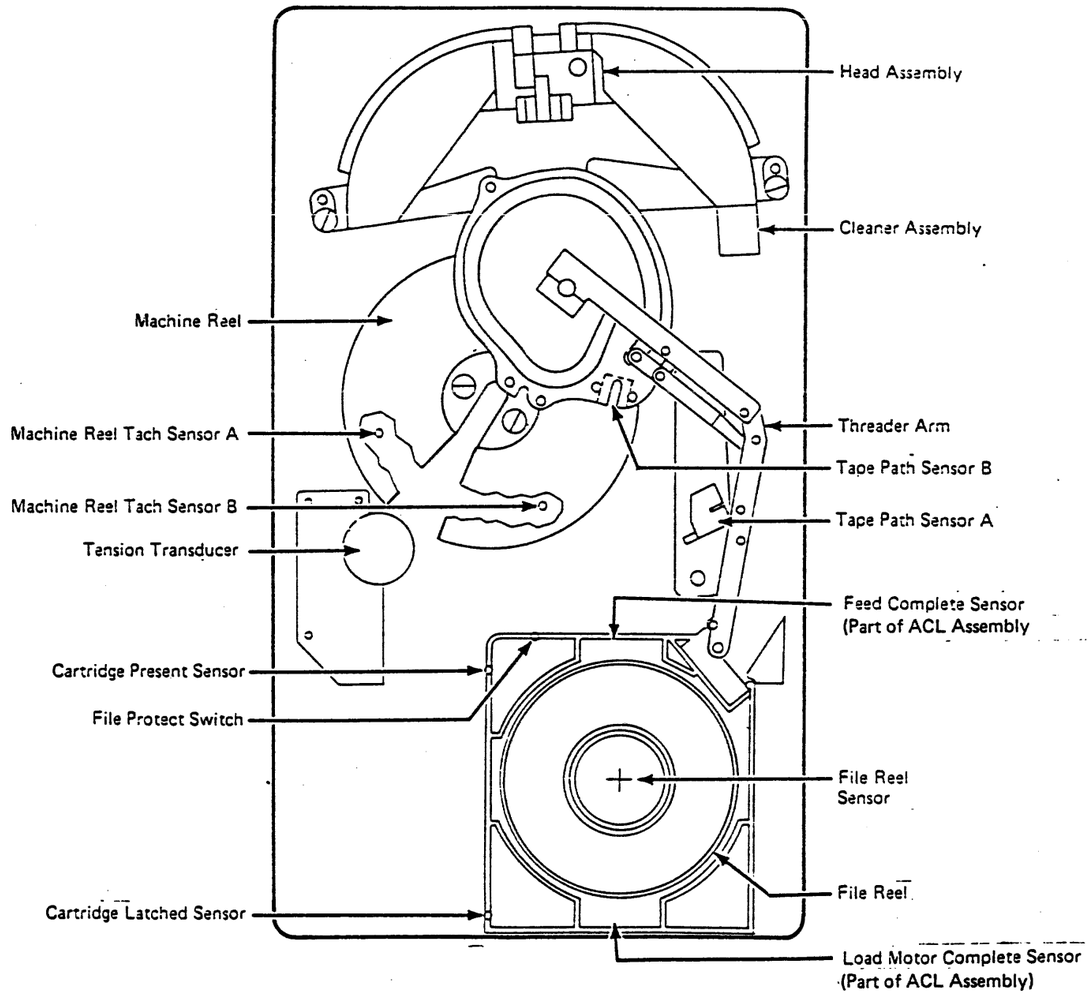

Introduction to Channel Commands

The tape control unit operates on the FIPS-60. The TA90 tape control unit executes the channel commands described in the following channel command summary table.

The STI-FIPS adapter converts standard STI Level 1 and Level 2 commands to the FIPS-60 commands.

Channel Command Summary

CHANNEL COMMAND	HEX CODE	DESCRIPTION
Assign	B7	Reserves the addressed drive to a specified channel path.
Backspace Block	27	Causes the drive to move the tape backward to the last block ID.
Backspace File	2F	Causes the drive to move the tape backward to the last tape mark.
Control Access	E3	Permits a specified drive to be used by a host processor to which it is not assigned.
Data Security Erase	97	Causes the drive to erase the tape to the end of the tape.
Erase Gap	17	Causes the drive to write an erase gap pattern.
Forward Space Block	37	Causes the drive to move the tape forward to the next block ID.
Forward Space File	3F	Causes the drive to move the tape forward to the next tape mark.
Load Display	9F	Causes a message to be displayed on the message display panel and is also used to control the automatic cartridge loader.
Locate Block	4F	Causes the drive to move the tape to the specified location of data.
Mode Set	DB	Causes a drive to be set to a specified operating mode.
No Operation	03	No operation is performed.
Perform Sub-system Function	77	Passes up to 3 bytes of control information to the subsystem.
Read Backward	0C	Causes the drive to read in a backward direction.
Read Block ID	22	Causes the tape block ID to be sent to the host processor.
Read Buffer	12	Causes the buffer data to be sent to the host processor.
Read Buffered Log	24	Causes the stored buffered log data to be sent to the host processor.
Read Device Characteristics	64	Causes up to 64 bytes of data containing installed feature information to be sent to the STI-FIPS adapter.
Read	02	Causes the drive to read in a forward direction.
Rewind	07	Causes the drive to rewind the tape to the load point.
Rewind Unload	0F	Causes the drive to rewind the tape and unload the cartridge.
Sense	04	Causes the TCU to send 32 bytes of sense data to the STI-FIPS adapter.
Sense ID	E4	Causes the TCU to send 7 bytes of subsystem ID information to the STI-FIPS adapter.
Sense Path Group ID	34	Causes the TCU to send the path state byte and the 11 bytes of path group ID information to the STI-FIPS adapter.
Set Path Group ID	AF	Sends the function control byte and 11 path group ID bytes to the tape control unit.
Suspend Multipath Reconnection	5B	Causes a temporary connection between the addressed drive and the channel path that issued the command.
Synchronize	43	Causes the drive to be synchro-nized with the host processor after a buffered operation.
Test I/O	00	Causes the TCU to send the status byte to the STI-FIPS adapter.
Unassign	C7	Releases the addressed drive from the channel path group to which it had been reserved.
Write	01	Causes the drive to write data on the tape.
Write Tape Mark	1F	Causes the drive to write a tape mark pattern on the tape.

Contents

Maintenance Starting Point 10

Fault Symptom Codes Caused by other than TA90 Hardware Failures 100
Actions for Possible Non-FRU caused Error Codes 130
Possible Tape Media Problems 130
Possible Software Problems 130
Possible Channel Adapter Hardware or Firmware Problem 135
Possible EC Level Compatibility Problems 135

TA90 Media Fault Determination Criteria 140
Description/Definition 140
Isolation 140
Single Cartridge Fault Determination Criteria 140

Determining a Fault Symptom Code 300
Determining a Fault Symptom Code From the ACL LEDs 300
Determining an Error Code From the A and B Fault Indicators 300
Determining a Fault Symptom Code From a Sense Byte Error Code 310

Action After a Fault Symptom Code Has Been Determined 325

Error Path Isolation 400
Error Path Sense Bytes Definitions 400
Examples of Sense Data Identification of a Data Path 400
Single TA90 Tape Control Unit 400
Dual TA90 Tape Control Units 401

Determining the Tape Control Unit Involved 420

Contents START 1

Maintenance Starting Point

* See Note at bottom of page.

Begin all maintenance action here. Find the reason you're here in the left column and perform the stated action in the right column.

IF YOU'RE HERE FOR THIS REASON	PERFORM THIS ACTION
Service call (solid and intermittent failures).	Note: Go to **ACTION:** in the next column.
Device(s) failing with excessive temporary Read/Write errors of ECC count.	
Install the TA90	Go to "TA90 Installation," see INST 1.
Relocate or discontinue the TA90.	Go to "TA90 Relocate or Discontinue," see INST 1.
Inspection for maintenance agreement qualification.	See "General Instructions" on INSP 10 for safety inspection procedures.

MISCELLANEOUS PROCEDURES	
Dismount a drive.	Go to PLAN 55
Dismount a device.	Go to PLAN 55
Operate the drive.	Go to Panel 5
Use the CE Panel with the TA90.	Go to CE/HSC 1
Hardcopy analyze an error log printout.	Go to MSG 100
Run HSC subsystem diagnostics.	Go to CE/HSC 1
Analyze sense bytes.	Go to SENSE 100
Remove a cartridge by hand.	Go to CART 10
Replace a leader block.	Go to CART 20
Attach tape to a cartridge hub.	Go to CART 30
Review how to use the TA90 maintenance guide.	Go to PLAN 10
Locate switches and indicators.	Go to LOC 1 (Tape Control Unit) LOC 1 (Tape Transport Unit)
Drive operator panel messages.	Go to PANEL 30

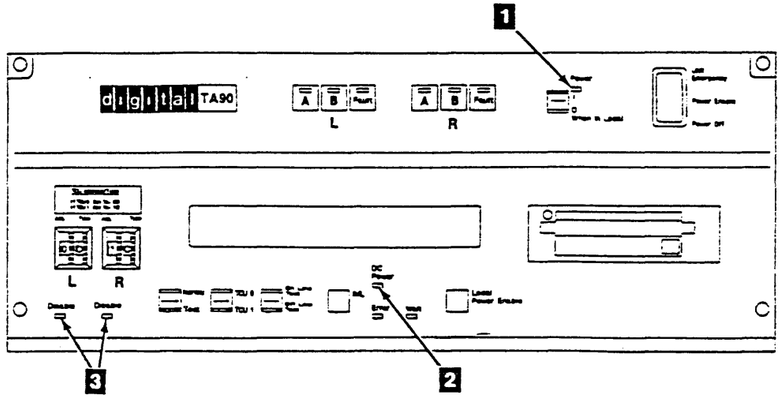

ACTION:

Write down any failing indications such as a "CHK XX" (XX equals a hexidecimal error code) or other messages and indications on the drive message display for future use.

IF YOU HAVE THIS PROBLEM	PERFORM THIS ACTION
The tape control unit Power On indicator is off. 1	Go to "MAP 0100 - Power Start" Entry A on PWR 100-1.
The tape control unit DC Power indicator is off. 2	Go to "MAP 0400 - Tape Control Unit DC Power" Entry A on PWR 400-1.
The tape control unit DC Power indicator in ON and you suspect tape transport unit drive power problems.	Go to "MAP 0200 - Drive DC Power (Single Drive" on PWR 200-1, or "MAP 0210 - Drive DC Power (Same Symptom Both Drives)" on PWR 200-1,
You suspect STI-FIPS Adapter power problems... If all LED's are off...	Go to "MAP 0300 - STI Power Check" on PWR 300-1,
The tape control unit Error Indicator is on or blinking, or... See PANEL 10 for Information on Indicators.	1. If VAXsimPLUS or ERF indicate a COMTAB entry, use the COMTAB entry. If VAXsimPLUS provides a FRU callout, change the indicated FRU. If VAXsimPLUS is not present, but ERF indicates a COMTAB entry, go to START 22, entry point 007. If VAXsimPLUS or ERF do not indicate a COMTAB entry and at least one of the "Disable" indicators 3 is off, use the CE Panel to access COMTAB. 2. If changing the indicated FRU's did not fix the problem, or if there is no COMTAB entry, use the CE Panel. **Note:** To read the COMTAB from the CE Panel, go to CE/HSC 1. 3. GMP tests: see START 310 to determine the FSC. 4. If you are unable to run GMP, go to START 20.

Use the CE Panel or HSC Console to invoke the GMP tests.

Note:

To find out how to use the CE Panel, see "How to use the CE Panel with the TA90" on CE/HSC 1.

* **NOTE:** It may be necessary to remove the automatic loader decorator cover from an adjacent drive for some service procedures. If it is necessary to remove the decorative cover, go to CARR-DR 2-9.

START 20

PAGE 1 OF 4

ENTRY POINTS

FROM	ENTER THIS MAP		
MAP NUMBER	ENTRY POINT	PAGE NUMBER	STEP NUMBER
0010	A	1	001
0021	B	4	014
0021	C	1	002
0021	D	2	009

001
(ENTRY POINT A)

CHECK 1 ENTRY POINT.

MAP DESCRIPTION: THIS MAP IS USED TO DETERMINE WHY THE TAPE CONTROL UNIT ERROR LED CAME ON.

START CONDITIONS: YOU WERE DIRECTED TO THIS MAP FROM START 10.

REMOVE THE DISKETTE CONTAINING THE FUNCTIONAL MICROCODE FROM THE IML DISK DRIVE AND INSERT THE SUPPORT DISKETTE INTO THE DISK DRIVE.

NOTE: THE DISKETTE MUST NOT BE WRITE PROTECTED. (SLIDE THE WRITE PROTECT TAB AWAY FROM THE EDGE OF THE DISKETTE SO THAT THE SMALL WINDOW IS COVERED.)

SET THE ONLINE TEST/OFFLINE TEST SWITCH TO THE OFFLINE TEST POSITION.

PRESS THE IML SWITCH TO INITIATE THE SUPPORT DISKETTE MICROCODE.

IMLING THE SUPPORT DISKETTE CAUSES THE SAME SET OF POWER ON DIAGNOSTICS TO EXECUTE AS THOSE FOUND ON THE FUNCTIONAL MICROCODE DISKETTE.

SET THE ONLINE TEST/OFFLINE TEST SWITCH TO THE ONLINE TEST POSITION.
(Step 001 continues)

(Step 001 continued)

IS THE TAPE CONTROL UNIT ERROR LIGHT ON SOLID?
Y N

002

(ENTRY POINT C)

IS THE TAPE CONTROL UNIT ERROR LIGHT FLASHING?
Y N

003

THE POWER ON RESET DIAGNOSTICS HAVE EXECUTED AND MAY HAVE POSTED INFORMATION ON THE DRIVE DISPLAY PODS. SCAN THE DISPLAYS AT THIS TIME.

ARE THERE ANY MESSAGES POSTED ON ANY DRIVE DISPLAY POD?
Y N

004

THE FAILURE ORIGINALLY POSTED DID NOT OCCUR AGAIN.

REFER TO THE DIAG SECTION OF THE MG AND RUN DIAGNOSTIC E010.

2 2 2
A B C

Start 20 START 20

C
1

START 20

PAGE 2 OF 4

005

THE MESSAGE IS DISPLAYED IN TWO PARTS. ONE PART CONTAINS THE DIAGNOSTIC WHICH DISCOVERED THE ERROR CODE. THE OTHER PART DISPLAYS THE ERROR CODE.

YOU MAY NOW ATTEMPT TO REPAIR THE PROBLEM OR TO RUN FURTHER TESTS.

DO YOU WANT TO REPAIR THE PROBLEM BEING REPORTED?
Y N

006

TO RUN FURTHER TESTS, REFER TO THE DIAG SECTION OF THE MG AND RUN THE DIAGNOSTIC SUGGESTED BY THE DISPLAY.

007

REFER TO THE DIAG SECTION (POR CODES) OF THE MG TO CONVERT THE FSC (POR) CODE DISPLAYED TO A SUPPORT ERROR CODE (FAILURE ID). THEN REFER TO THE SUGGESTED DIAGNOSTIC IN THE DIAG SECTION TO GET A FRU LIST FOR THE ERROR CODE.

AFTER FRU REPLACEMENT, POWER UP WILL CAUSE THE POWER ON DIAGNOSTICS TO RE-EXECUTE.
GO TO PAGE 4, STEP 014,
ENTRY POINT B.

A B
1 1

008

THE POWER ON DIAGNOSTICS HAVE DETECTED A PROBLEM BUT ARE UNABLE TO REPORT IT IN THE CONVENTIONAL MANNER.

THE FIRST MOST LIKELY SUSPECT IS THE INTERFACE BETWEEN THE TAPE CONTROL UNIT AND THE TAPE TRANSPORT UNIT.

REFER TO THE FSI SECTION OF THE MG AND USE D4NN AS THE ERROR CODE TO GET A SUGGESTED FRU LIST.

AFTER FRU REPLACEMENT, POWER UP WILL CAUSE THE POWER ON DIAGNOSTICS TO RE-EXECUTE.
GO TO PAGE 4, STEP 014,
ENTRY POINT B.

009

(ENTRY POINT D)
THE POWER ON DIAGNOSTICS HAVE DETECTED A PROBLEM BUT ARE UNABLE TO REPORT IT IN THE CONVENTIONAL MANNER.

THE MOST LIKELY SUSPECT IS A FAULTY DISKETTE OR DISK DRIVE

HAVE YOU REPLACED THE DISKETTE YET?
Y N

3 3
D E

D E START 20
2 2

PAGE 3 OF 4

010
REMOVE THE DISKETTE FROM THE IML
DISK DRIVE AND INSERT A NEW
SUPPORT DISKETTE INTO THE DISK
DRIVE.
PRESS THE IML SWITCH TO INITIATE
THE SUPPORT DISKETTE MICROCODE.
GO TO PAGE 4, STEP 014,
ENTRY POINT B.

011

A LOGIC CARD PROBLEM IS NOW
INDICATED.

REFER TO THE FSI SECTION OF THE MG
AND USE E100 AS THE ERROR CODE TO
GET A SUGGESTED FRU LIST.

HAVE YOU REPLACED FRUS AS
SUGGESTED?
Y N

012

THE PRIMARY FRU BUCKET IS:

SEE LOC FOR LOGIC BOARD POSITIONS
(CARD SIDE).

117,115,134,135

THE SECONDARY FRU BUCKET IS:

114,118,121,119,116,120,122.

EXCHANGE FRUS.

AFTER FRU REPLACEMENT, POWER UP
WILL CAUSE THE POWER ON
DIAGNOSTICS TO RE-EXECUTE.
GO TO PAGE 4, STEP 014,
ENTRY POINT B.

F

F

013

REPLACE THE DISKETTE DRIVE.
GO TO PAGE 4, STEP 014,
ENTRY POINT B.

START 20

PAGE 4 OF 4

014
(ENTRY POINT B)

ENTRY AT THIS POINT IS TO VERIFY
THAT FRUS REPLACED HAVE CORRECTED
THE FAILURE.

POWERING UP AFTER FRU REPLACEMENT
OR RE-IML HAS CAUSED THE POWER ON
DIAGNOSTICS TO RE-EXECUTE.

IS THE TAPE CONTROL UNIT ERROR LED
ON?
Y N

015
THE REPAIR ACTION WAS SUCCESSFUL.

REFER TO THE DIAG SECTION OF THE
MG AND RUN DIAGNOSTIC E010.

016

CURRENT REPAIR ACTION FAILED.

HAVE YOU COMPLETED ALL RECOMMENDED
REPAIR ACTIONS?
Y N

017

IS THE TAPE CONTROL UNIT ERROR
LIGHT ON SOLID?
Y N

018

GO TO PAGE 2, STEP 009,
ENTRY POINT D.

G H

G H

019

GO TO PAGE 1, STEP 002,
ENTRY POINT C.

020

CALL YOUR NEXT LEVEL OF SUPPORT.

START 40

PAGE 1 OF 2

ENTRY POINTS

FROM MAP NUMBER	ENTER THIS MAP ENTRY POINT	PAGE NUMBER	STEP NUMBER
0010	A	1	001

001
(ENTRY POINT A)

START40 ENTRY POINT.

MAP DESCRIPTION: THIS MAP IS USED TO DETERMINE THE NEXT COURSE OF ACTION.

START CONDITIONS: YOU WERE DIRECTED TO THIS MAP FROM START 10.

THE FUNCTIONAL MICROCODE MAY HAVE POSTED INFORMATION ON THE DRIVE DISPLAY PODS. SCAN THE DISPLAYS AT THIS TIME.

ARE THERE ANY MESSAGES POSTED ON ANY DRIVE DISPLAY POD?
Y N

002

IF AN ACL IS ATTACHED, THERE MAY BE MESSAGES IN THE ACL LEDS WHICH ARE LOCATED UNDER THE ACL COVER. IS AN ACL ATTACHED TO A TAPE TRANSPORT UNIT?
Y N

003

RUN THE GOOD MACHINE PATH DIAGNOSTICS (GMP). — SEE CE/HSC

A B

A B

004
OPEN THE ACL FRONT COVER(S) AND CHECK FOR ERROR CODES IN THE ACL LEDS.
ARE ANY ACL ERROR CODES PRESENT?
Y N — AN ACL IS ATTACHED

005

RUN THE GOOD MACHINE PATH DIAGNOSTICS (GMP). — SEE CE/HSC

006

TO REPAIR, REFER TO THE FSI SECTION OF THE MG AND REPLACE FRUS SUGGESTED BY THE ERROR CODE POSTED ON THE DISPLAY. — PREFIX THE ACL ERROR CODE WITH E7 AND USE THE RESULT AS AN ERROR CODE FOR THE FSI REFERENCE.

007

THE MESSAGE DISPLAYED MAY BE A CHECK CODE POINTING TO DRIVE FAULTS OR ACL FAULTS IF AN ACL IS INSTALLED. — ACL CHECK CODES ARE CHKEC,CHKED,CHKEE OR CHKEF.

ARE THERE ANY ACL CHECK CODES PRESENT?
Y N

008

TO REPAIR, REFER TO THE FSI SECTION OF THE MG AND REPLACE FRUS SUGGESTED BY THE ERROR CODE POSTED ON THE DISPLAY. — REPLACE THE CHARACTERS CHK WITH 00 AND USE THE RESULT AS AN ERROR CODE FOR THE FSI REFERENCE.

2
C

Start 40 START 40

Start 42 START 42

C START 40
1

PAGE 2 OF 2

009

OPEN THE ACL FRONT COVER AND RECORD THE ERROR CODE IN THE ACL LEDS.

TO REPAIR, REFER TO THE FSI SECTION OF THE MG AND REPLACE FRUS SUGGESTED BY THE ERROR CODE POSTED ON THE DISPLAY.

AN ACL ERROR IS FLAGGED BY THE DRIVE.

PREFIX THE ACL ERROR CODE WITH E7 AND USE THE RESULT AS AN ERROR CODE FOR THE FSI REFERENCE.

Start 42 START 42

Fault Symptom Codes Caused by other than TA90 Hardware Failures

You are here because of FSC data received after you had entered requested sense data, or by the FSI section. This is a listing of fault symptom codes (FSC) that can also be caused by other than TA90 hardware failures. It also provides a definition of the FSC, the causes, and the action you should perform.

Find your fault symptom code in the FSC column (beginning on this page) and do the actions in the Action column.

FSC	FSC Definition	Causes Other than TA90 Hardware Failures	Action
1600	The two tape control units are not at the same microcode EC level.	This error could result from operating condition.	The EC level of the tape control unit microcode is different in a two tape control unit subsystem. Check the diskettes and ensure they are at the same EC level.
1601	The two tape control units do not have the same Checksums. (The two tape control units are not at the same microcode EC level.)	This error is an operating condition.	The EC level of the tape control unit microcode is different in a two tape control unit subsystem. Check the diskettes and ensure they are at the same EC level.
2200	A channel transfer time-out between the adapter and TCU occurred on a write operation.	Possible STI-FIPS adapter problem or overrun condition.	See "Possible STI-FIPS Adapter Problem or Overrun Condition" on START 135.
2201	A channel transfer time-out between the adapter and TCU occurred on a read operation.	Possible STI-FIPS adapter problem or overrun condition.	See "Possible STI-FIPS Adapter Problem or Overrun Condition" on START 135.
2600	A System Reset was received on the last path of a path group.	The HSC or STI-FIPS adapter caused a system reset during error recovery.	1. Search your sense data for a previous record for the same device. 2. Refer to the CE/HSC section and run GMP.
3300	A channel command retry has been stacked or refused by the channel after a channel adapter command retry attempt.	Possible STI-FIPS adapter problem or overrun condition.	See "Possible STI-FIPS Adapter Problems or Overrun Condition" on START 135.
33E4	The addressed drive is assigned to a path group that does not contain the channel path on which the command was received.	Possible software problem or STI-FIPS adapter problem or overrun condition.	1. See "Possible Adapter Firmware Problem" on START 130. 2. If the GMP runs error-free, see "Possible STI-FIPS Adapter Problems or Overrun Condition" on START 135.
33E5	A command reject occurred because of an invalid command code.	Possible software problem or STI-FIPS adapter problem or overrun condition.	1. See "Possible Adapter Firmware Problem" on START 130. 2. If the GMP runs error-free, see "Possible STI-FIPS Adapter Problems or Overrun Condition" on START 135.
33E7	The drive is not online.	The Power On/Off switch is set to Off. The Online/Offline switch is set to offline. The Drive Address switch is not set to the correct address.	1. Verify that these switches are set to the correct position; if not, set the switches to the following position: • The Power On/Off switch to On • The Online/Offline switch to online • The Drive Address switch to the correct address. 2. Refer to the CE/HSC section and run GMP.

FSC	FSC Definition	Causes Other than Hardware Failures	Action
33E8	The drive is not ready.	The Ready/Not Ready switch is set to Not Ready, the tape is not loaded in the drive or the drive dc power supply voltages are out of tolerance.	1. Verify that the Ready/Not Ready switch is set to the Ready position and that tape has been loaded; if not, set the Ready/Not Ready switch to Ready and insert a cartridge into the drive. 2. Do one of the following: • If the Ready/Not Ready switch was determined to be in the wrong position at the time this error occurred, run GMP. • If the Ready/Not Ready switch was determined to be in the correct position at the time this error occurred, measure the drive dc power supply voltages using a voltmeter. Reference PWR 20 for tolerance charts. If the voltages are out of tolerance, exchange the drive dc power supply (FRU 095), then run GMP.
33E9	The drive is file protected.	The cartridge File Protect switch is set to File Protect.	Verify that the File Protect switch, on the customer's volume being used at the time this error occurred, was set to the File Protect position.
3A10	A channel command was received before the adapter firmware error recovery actions were completed after a permanent write error had occurred on a different channel.	The STI-FIPS adapter error recovery actions had not completed, were not desired, or a second STI-FIPS adatper attempted to gain access to a shared device.	1. Search your sense data for a previous record for the same device. 2. Refer to the CE/HSC section and run GMP.
3C60	An incorrect byte count was detected during a channel-to-control-unit operation.	Possible adapter firmware problem.	See "Possible Adapter Firmware Problem" on START 130.
3F13	Information only; shows that a previous permanent write error had occurred.	The adapter firmware error recovery actions did not complete or were not started.	1. Search your sense data for a previous record for the same device. 2. Refer to the CE/HSC section and run GMP.
3F14	The drive is not online to either tape control unit.	The Power On/Off switch is set to Off. The Online/Offline switch is set to offline. The Drive Address switch is not set to the correct address.	1. Verify that these switches are set to the correct position; if not, set the switches to the following position: • The Power On/Off switch to On • The Online/Offline switch to online • The Drive Address switch to the correct address. 2. Do the following: • If any of these switches were determined to be in the wrong position at the time this error occurred, run GMP.

FSC	FSC Definition	Causes Other than TA90 Hardware Failures	Action
4200	An invalid tape-format bit combination was detected in the TA90 Mode Set command.	Possible software problem.	See "Possible Software Problem" on START 130.
4204	Bit 4 of a mode set command, specifying write data should be in the &dci. mode, it was issued to a tape control unit that does not have the &dci. feature.	Possible software problem.	See "Possible Software Problem" on START 130.
4260	No channel paths in the grouped state for this drive that have a path group ID matching the path group received as the argument to the Assign command.	Possible software problem.	See "Possible Software Problem" on START 130.
4261	The channel path that issued an Unassign command did not have assignment of the drive.	Possible software problem.	See "Possible Software Problem" on START 130.
4262	The Unassign command was issued and no channel paths with path group IDs matching the Unassign command argument have assignment of the drive.	Possible software problem.	See "Possible Software Problem" on START 130.
4263	The drive is not online.	The Power On/Off switch is set to Off. The Online/Offline switch is set to offline. The Drive Address switch is not set to the correct address.	1. Verify that these switches are set to the correct position; if not set the switches to the following positions: • The Power On/Off switch to On. • The Online/Offline switch to Online. • The Drive Address switch to the correct address. 2. Do one of the following: • If any of these switches were determined to be in the wrong position at the time this error occurred, correct the switch settings. Refer to the CE/HSC section and run GMP. • If these switches were determined to be in the correct position at the time this error occurred, refer to the CE/HSC section and run GMP.
4280	An invalid function-control byte has been received; an invalid function was specified.	Possible software problem.	See "Possible Software Problem" on START 130.
47B0	The Space File operation is not making any progress down the tape.	The tape was blank or the tape had been positioned beyond the last written data.	Refer to the CE/HSC section and run GMP.
4B20	A Set Path Group ID command was received with an invalid function control byte in the argument; bits 3 through 7 were not 0.	Possible software problem.	See "Possible Software Problem" on START 130.
4B21	A path group ID in the argument of the Set Path Group ID command is equal to 0.	Possible software problem.	See "Possible Software Problem" on START 130.
4B22	The path group ID in the argument of the Set Path Group ID command does not match the path group ID received in a prior Set Path Group ID command over the same channel.	Possible software problem.	See "Possible Software Problem" on START 130.
4B23	The received path mode bit in the function-control byte does not match the path mode set in a prior Set Path Group ID command addressed to a channel interface with the same path group ID as the interface that issued the current command.	Possible software problem.	See "Possible Software Problem" on START 130.
4B24	The received path mode bit was on, indicating multipath mode. Multipath mode is not supported by this machine.	Possible software problem.	See "Possible Software Problem" on START 130.
4D70	The received password for the Control Access command is zero. Multipath mode is not supported by this machine.	Possible software problem.	See "Possible Software Problem" on START 130.
4D71	An invalid function byte has been received for the Control Access command.	Possible software problem.	See "Possible Software Problem" on START 130.
4D72	The password received with the Control Access command does not match the password received during a prior Control Access command.	Possible software problem.	See "Possible Software Problem" on START 130
4D73	A Control Access command attempted to establish a password, but the channel path that issued the command did not have assignment of the drive.	Possible software problem.	See "Possible Software Problem" on START 130.

Fault Symptom Codes Caused by other than TA90 Hardware Failures (Continued)

FSC	FSC Definition	Causes Other than TA90 Hardware Failures	Action
4D74	A Control Access command attempted the temporary unassign function, but a prior command had not established a password.	Possible software problem.	See "Possible Software Problems" on START 130.
4D75	A Control Access command attempted the generalized unassign function, but the channel path that issued the command did not have assignment of the drive.	Possible software problem.	See "Possible Software Problems" on START 130.
4D8D	The Perform Subsystem Command received an invalid order or flag byte.	Possible software problem.	See "Possible Software Problems" on START 130.
4E80	An invalid function-control byte has been received.	Possible software problem.	See "Possible Software Problems" on START 130.
4E8A	The drive is not online.	The Power On/Off switch is set to off. The Online/Offline switch is set to offline. The Drive Address switch is not set to the correct address.	1. Verify that these switches are set to the correct position; if not, set the switches to the following position: The Power On/Off snitch is set to on. The Online/Offline switch is set to online. The Drive Address switch is not set to the correct address. 2. Do one of the following: If any of these switches are determined to be in the wrong position at the time this error occurred, correct the switch settings. Refer to the CE/HSC section and run GMP. If these switches were determined to be in the correct position at the time this error occurred, refer to the CE/HSC section and run GMP.
4E8B	The addressed drive is assigned to a path group that does not contain the channel path on which the command was received.	Possible software problem.	See "Possible Software Problem" on START 130.

FSC	FSC Definition	Causes Other than TA90 Hardware Failures	Action
52nn	The channel command did not match.	Possible channel adapter hardware or firmware problem.	See "Possible Software Problem " on START 130.
5343	A TCU-TCU message was invalid or lost.	Both TCU ID switches are set to the same ID.	See "Setting the Tape Control Unit Addresses" on PANEL 12. • If the switches are correct, run GMP. • If the switches are incorrect: 1. IML the tape control unit (see PANEL 7). 2. Refer to the CE/HSC section and run GMP.
5605	The channel adapter detected a parity error on a channel command.	Possible channel adapter hardware or firmware problem.	See "Channel Adapter Hardware or Firmware Problems" on START 135.
5AD4	A Collision Detect was sensed as the tape control unit was coming up.	Both TCU ID switches are set to the same ID.	See "Setting the Tape Control Unit Addresses" on PANEL 12. • If the switches are set correctly, refer to the CE/HSC section and run GMP. • If the switches are incorrectly set: 1. IML the tape control unit (see PANEL 7). 2. Refer to the CE/HSC section and run GMP.
5BB0	The buffer switch was made free because of no activity on the channel path. Sense byte 9 contains the failing channel adapter address. 80 = Channel adapter A 40 = Channel adapter B	Possible channel adapter hardware or firmware problem.	See "Channel Adapter Hardware or Firmware Problems" on START 135.
5BB1	The buffer switch was made free because of no activity on the channel path. Sense byte 9 contains the failing channel adapter address. 80 = Channel adapter A 40 = Channel adapter B	Possible channel adapter hardware or firmware problem.	See "Channel Adapter Hardware or Firmware Problems" on Start 135.
7093	In read mode, an interblock gap was not detected within 2.0 mm (0.08 in.) after 'gap in'.	Possible tape media problem.	See "Possible Tape Media Problems" on START 130.
7094	The status from the drive did not indicate 'beginning of tape' or 'density mark successfully written' at 'gap in' time in a write operation. The tape control unit ERP will be called to rewind and retry the write density mark operation.	Possible tape media problem.	See "Possible Tape Media Problems" on START 130.
70C2	A block ID mismatch occurred on a read forward operation. The block just read from the tape does not have the expected block ID sequence number.	The tape was written with the wrong ID or a permanent write error ERPA was ignored; or a read was done after the end of current data on the tape.	Run GMP.
70C3	A block ID mismatch occurred on a read backward operation. The block just read from the tape does not have the expected block ID sequence number.	The tape was written with the wrong ID or a permanent write error ERPA was ignored.	Refer to the CE/HSC section and run GMP.

FSC	FSC Definition	Causes Other than TA90 Hardware Failures	Action
7093	In read mode, an interblock gap was not detected within 2.0 mm (0.08 in.) after 'gap in'.	Possible tape media problem.	See "Possible Tape Media Problems" on START 130.
7094	The status from the drive did not indicate 'beginning of tape' or 'density mark successfully written' at 'gap in' time in a write operation. The tape control unit ERP will be called to rewind and retry the write density mark operation.	Possible tape media problem.	See "Possible Tape Media Problems" on START 130.
70C2	A block ID mismatch occurred on a read forward operation. The block just read from the tape does not have the expected block ID sequence number.	The tape was written with the wrong ID or a permanent write error ERPA was ignored; or a read was done after the end of current data on the tape.	Refer to the CE/HSC section and run GMP.
70C3	A block ID mismatch occurred on a read backward operation. The block just read from the tape does not have the expected block ID sequence number.	The tape was written with the wrong ID or a permanent write error ERPA was ignored.	Refer to the CE/HSC section and run GMP.
70D2	A block ID mismatch occurred on a read forward operation in extended data format. The block just read from the tape does not have the expected block ID sequence number.	The tape was written with the wrong ID or a permanent write error ERPA was ignored.	Refer to the CE/HSC section and run GMP.
70D3	A block ID mismatch occurred on a read backward operation in extended data format. The block just read from the tape does not have the expected block ID sequence number.	The tape was written with the wrong ID or a permanent write error ERPA was ignored.	Refer to the CE/HSC section and run GMP.

FSC	FSC Definition	Causes Other than TA90 Hardware Failures	Action
7141	A density mark criteria was not met after five retries. A valid density pattern must be detected in 40 out of 50 samples of the read pattern register (RPR) (every 500 microseconds).	Possible tape media problem.	See "Possible Tape Media Problems" on START 130.
7142	A time-out occurred after waiting 2.5 milliseconds for the 'density separator' (beginning of block interrupt, level 2 interrupt).	Possible tape media problem.	See "Possible Tape Media Problems" on START 130.
7143	A time-out occurred after waiting 1.3 milliseconds for the 'interblock gap' that follows the 'density separator'.	Possible tape media problem.	See "Possible Tape Media Problems" on START 130.
7144	A time-out occurred after waiting 1.3 milliseconds for 'write end' in the write status/error (WSE) register when trying to write a 'density separator'.	Possible tape media problem.	See "Possible Tape Media Problems" on START 130.
7152	A read back check of an 'interblock gap' detected that the 'interblock gap' was too long. Maximum 'interblock gap' length is 3.0 mm (0.12 in.).	Possible tape media problem.	See "Possible Tape Media Problems" on START 130.
7153	A void was detected during a read operation.	The tape was blank or the tape had been positioned beyond the last written data.	Run GMP.
7154	A data transfer time-out was detected during a read operation. No valid 'interblock gap' was detected within 67 milliseconds after 'beg sync' was detected. (The timer is not set if the subsystem is in synchronous mode).	Possible tape media problem.	See "Possible Tape Media Problems" on START 130.
7155	A data transfer time-out was detected during a read back check operation. No valid 'interblock gap' was detected within 67 milliseconds after 'beg sync' was detected. (The timer is not set if the subsystem is in synchronous mode).	Possible tape media problem.	See "Possible Tape Media Problems" on START 130.
7159	A read back check time-out occurred waiting for the 'interblock gap' following an 'erase gap'. 'Interblock gap' must be detected with 6.1 milliseconds after the 'write erase gap' is started.	Possible tape media problem.	See "Possible Tape Media Problems" on START 130.
7161	'Density separator' was not detected before 45 sets of samples were taken (1025 mm - 40.4 in.).	Attempted to read a blank tape.	Run GMP.
7162	'Density separator' was detected, but no set of samples met the read criteria.	Possible tape media problem.	See "Possible Tape Media Problems" on START 130.

Fault Symptom Codes Caused by other than TA90 Hardware Failures (Continued)

FSC	FSC Definition	Causes Other than TA90 Hardware Failures	Action
7171	When in synchronous mode, the device transfer overran the channel transfer.	Possible STI-FIPS adapter hardware or firmware problem.	See "STI-FIPS Adapter Hardware or Firmware Problems" on START 135.
74nn	A read back check error occurred on the last record.	Possible tape media problem.	See "Possible Tape Media Problems" on START 130.
7503	During the read back check of a record, the microprocessor received a level 3 interrupt because 'end sync' timed out waiting for 'interblock gap' (100 microseconds).	Possible tape media problem.	See "Possible Tape Media Problems" on START 130.
76nn	A read error occurred on the last record. A level 3 interrupt was received because 'end sync' timed out waiting for 'interblock gap' (100 microseconds).	Possible tape media problem.	See "Possible Tape Media Problems" on START 130.
7702	256 'erase gaps' have been read without detecting a block or tape mark.	Tape was written with only 'erase gaps'.	Refer to the CE/HSC section and run GMP.
8100	No patches are available for this drive's EC level.	Possible EC compatibility problem.	See "Possible EC Level Compatibility Problems" on START 135.
8101	Possible hardware EC compatibility problem.	Possible EC compatibility problem.	See "Possible EC Level Compatibility Problems" on START 135.
8102	Possible hardware EC compatibility problem.	Possible EC compatibility problem.	See "Possible EC Level Compatibility Problems" on START 135.
8202	The Unload switch was pressed.	The operator manually unloaded a drive.	1. Search your sense data for a previous record for the same device. 2. Refer to the CE/HSC section and run GMP.
8204	Manual rewind.	The operator pressed the Rewind switch.	
86C0	Bit 0 of status byte 2 from the drive did not indicate the correct interface. tape control unit	A drive or drives are set to the wrong range of logical addresses. Drives attached to tape control unit 0 must be addressed from 0-7. Drives attached to tape control unit 1 must be addressed from 8-F. Both Tape Control Unit ID switches are set to the same ID.	Check the drive logical address and the Tape Control Unit ID switches. If the drive address and Tape Control Unit ID switches are set correctly, return to the procedure that sent you here and continue with that procedure. If the drive address or Tape Control Unit ID switches are set incorrectly, set the switches correctly. Refer to the CE/HSC section and run GMP.
9000	Two drives with logical address in sense byte 9 and sense byte 30 are indicating the same physical address.	Two drives may have the same physical address set in their Physical Address switches.	Check the drive physical address switch settings for the two indicated drives. If the physical address switches are not set to the same value, return to procedure that sent you here and continue with that procedure. If the physical address switches are set to the same value, change one or both physical address switches to a unique value. Refer to the CE/HSC section and run GMP.
A112	A packet ID mismatch occurred on a read operation in TA90 extended data format. The data read from the tape does not have the expected packet ID sequence number.	The tape was written with the wrong packet ID or a permanent write error ERPA was ignored.	Refer to the CE/HSC section and run GMP.
A130	A buffer-to-channel transfer caused a check 2 condition.	Possible STI-FIPS adapter hardware or firmware problem.	See "STI-FIPS Adapter Hardware or Firmware Problems" on START 135.
A170	A channel-to-buffer transfer caused a check 2 condition.	Possible STI-FIPS adapter hardware or firmware problem.	See "STI-FIPS Adapter Hardware or Firmware Problems" on START 135.

FSC	FSC Definition	Causes Other than TA90 Hardware Failures	Action
A2nn	A buffer-to-channel transfer caused a check 2 condition.	Possible host processor channel problem or overrun condition.	See "STI-FIPS Adapter Hardware or Firmware Problems" on START 135.
A3nn	A buffer-to-channel transfer caused a check 2 condition.	Possible host processor channel problem or overrun condition.	See "STI-FIPS Adapter Hardware or Firmware Problems " on START 135.
A5nn	A buffer-to-channel transfer caused a check 2 condition.	Possible host processor channel problem or overrun condition.	See "STI-FIPS Adapter Hardware or Firmware Problems " on START 135.
A6nn	A buffer-to-channel transfer caused a check 2 condition.	Possible host processor channel problem or overrun condition.	See "STI-FIPS Adapter Hardware or Firmware Problems " on START 135.
A7nn	A buffer-to-channel transfer caused a check 2 condition.	Possible host processor channel problem or overrun condition.	See "STI-FIPS Adapter Hardware or Firmware Problems " on START 135.
A8nn	A buffer-to-channel transfer caused a check 2 condition.	Possible host processor channel problem or overrun condition.	See "STI-FIPS Adapter Hardware or Firmware Problems " on START 135.
CCDD	Fifty consecutive errors have occurred.	Possible host processor channel problem or overrun condition.	Using VAXim PLUS or ERF, look for other sense records with a different FSC for this tape control unit. Use the newly determined FSC for troubleshooting.
CCEE	An error occurred during a synchronous read or write operation. **Note:** Error recovery is not performed for errors that occur in 'synchronous mode'.	Possible host processor channel problem or overrun condition.	Using VAXsimPLUS or ERF, look for other sense records with a different FSC for this tape control unit. Use the newly determined FSC for troubleshooting.
D0nn	The read status register (RSR) contains active bits 5, 6, or 7. The nn indicates which bits are active in the RSR.	Possible host processor channel problem or overrun condition.	See "Possible Tape Media Problems" on START 130.
D584	During channel/buffer communication, a buffer checker had detected an error.	Possible host processor channel problem or overrun condition.	See "STI-FIPS Adapter Hardware or Firmware Problems" on START 135.
DAnn	The CMS register indicates an error, where nn = the BCSE register.	Possible tape media problem.	See "Possible Tape Media Problems" on START 130.
DCnn	The CMS register indicates an error, where nn = the CTXE or CPEO register.	Possible tape media problem.	See "Possible Tape Media Problems" on START 130.
E501	The STI-FIPS adapter has failed to communicate with the channel adapter.	Possible STI-FIPS adapter hardware or firmware problem.	See "STI-FIPS Adapter Hardware or Firmware Problems" on START 135.
E502	The STI-FIPS adapter has failed to communicate with the channel adapter.	Possible STI-FIPS adapter hardware or firmware problem.	See "STI-FIPS Adapter Hardware or Firmware Problems" on START 135.
E505	The STI-FIPS adapter has failed to communicate with the channel adapter. Possible host processor channel problem or overrun condition. Possible STI-FIPS adapter hardware or firmware problem.	Possible ST-FIPS adapter hardware or firmware problem.	See "STI-FIPS Adapter Hardware or Firmware Problems" on START 135.
E511	The STI-FIPS adapter has failed to communicate with the channel adapter.	Possible STI-FIPS adapter hardware or firmware problem.	See "STI-FIPS Adapter Hardware or Firmware Problems" on START 135.
E513	The STI-FIPS adapter has failed to communicate with the channel adapter.	Possible STI-FIPS adapter hardware or firmware problem.	See "STI-FIPS Adapter Hardware or Firmware Problems" on START 135.
E514	The STI-FIPS adapter has failed to communicate with the channel adapter.	Possible STI-FIPS adapter hardware or firmware problem.	See "STI-FIPS Adapter Hardware or Firmware Problems" on START 135.
E520	The STI-FIPS adapter has failed to communicate with the channel adapter.	Possible STI-FIPS adapter hardware or firmware problem.	See "STI-FIPS Adapter Hardware or Firmware Problems" on START 135.
E800	There are too many temporary data errors based on Format 21 sense records from error log message information.	Possible tape media problem.	See "Possible Tape Media Problems" on START 130.

Actions for Possible Non-FRU Caused Error Codes.

Possible Tape Media Problems

The following error codes can indicate possible tape media problems.

47B0	7143	7161	D0nn
7093	7144	7162	DAnn
7094	7152	7163	DCnn
70C2	7153	74nn	E800
70C3	7154	7503	
7141	7155	76nn	
7142	7159	7702	

Errors detected in the data-flow area of the TA90 subsystem can also be caused by the tape media. The FSC/Error Code correctly points to the possible subsystem hardware FRUs. However, sometimes the replacement of these FRUs does not correct the problem. You should determine if the problem was caused by the tape media before replacing the subsystem FRUs.

This procedure assumes that you have an error code that is listed in the above list. This error code came from the VAXsimPLUS or ERF. To determine if the problem could be caused by the tape media, do the following action.

Perform analysis to determine if the problem is related to a unique tape volume.

- If the VAXsimPLUS analysis indicates that the tape media ***is not*** the problem, continue with the maintenance specified for the product trained service representative in the product maintenance package, or for the support trained service representative, the additional actions specified in the FSI for the failing FSC.
- If the VAXsimPLUS analysis indicates that tape media ***is*** the problem and multiple cartridges are failing, go to Media Contamination Fault Determination Criteria on START 140.
- If the VAXsimPLUS analysis indicates that the tape media ***is*** the problem and a single cartridge is failing, go to Single Cartridge Fault Determination Criteria on START 140.

Possible Adapter Firmware or Software Problems

The following error codes can indicate possible software problems.

33E4	4260	4B20	4D70	4D75
33E5	4261	4B21	4D71	4E80
3C60	4262	4B22	4D72	4E81
3F13	4280	4B23	4D73	4E8A
4200	47B0	4B24	4D74	4E88
4204				

There are error codes that can be caused by either hardware or software problems. For example:

- The adapter sent an illegal TA90 TCU subsystem command.
- The TA90 hardware could have a malfunction that decodes a correct command as an illegal command.

For these possible software problems suspect:

1. New VMS releases have been installed.
2. New applications of existing programs or jobs are being run.
3. Configuration changes have been made and the description of the error code relates to assignment or path group problems.

Fault Symptom Codes Caused by other than TA90 Hardware Failures (Continued)

Possible Channel Adapter Hardware or Firmware Problems

The following error codes can indicate possible channel adapter hardware or firmware problems.

2200	5BB0	A5nn	E501 (CC=3)
2201	5BB1	A6nn	E502
3300	7171	A7nn	E503
33E4	A130	A8nn	E513
33E5	A170		E514
52nn	A2nn		E520
5605	A3nn		

Run ILEXER to determine that the subsystem operates correctly with the STI-FIPS adapter.

Possible EC Level Compatibility Problems

The following error codes can indicate possible EC compatibility problems.

8100 - Microcode patches not available
8101 - Possible hardware EC compatibility problem
8102 - Possible hardware EC compatibility problem

There are several types of EC level compatibility problems. The most common mismatches are:

- In the drive compared to the tape control unit
- In the tape control unit functional microcode compared to the hardware.

TA90 Media Fault Determination Criteria

Note: You were sent to this page because of a possible media problem with multiple cartridges and/or multiple drives. There should be a pattern of similar unscheduled service calls.

This procedure should be followed for each suspected media service call. After following this procedure, do **NOT** approach the customer about a potential media problem until further analysis is completed by the next level of support. Notify your manager at this time of a possible media problem.

Description/Definition

Tape media can create a number of failure modes similar to those caused by actual hardware problems and the severity can be significant if not properly handled. For this reason, it is important that careful analysis and problem determination be made if a media failure is suspected.

One failure mode is media generated debris. Debris can be caused by minute particles separating from the tape and will normally appear as a thin line of deposits (very difficult to see without magnification) across the tape, the Read/Write head or the cleaner blade.

Some typical failure modes commonly associated with media problems include but are not limited to:

- Permanent read or write errors caused by:
  - deposits transferred to and from the cleaner blade
  - transfer of media particles to the Read/Write head
  - media particles left on the tape surface may cause the tape to be lifted from the head thereby causing a failure.
- Dropping records due to debris deposits and subsequent loss of tape position indicated by block sequence errors.
- High temporary error rate.
  - evidenced by highly erratic drive performance day to day
  - not definable to a single drive, tape control unit or subsystem
  - not the result of repeat failures on a particular volume.

The following information provides some basic considerations and guidelines relative to handling media problems.

ISOLATION

ENSURE HARDWARE

The integrity of the hardware must be established. This requires utilization of the maintenance package to ensure there are no hardware malfunctions in the subsystem which could be causing the degradation. The hardware must be able to run all diagnostics error free.

Once hardware problems have been eliminated as the reason for poor performance, and media is suspected, the following items need to be verified:

ENSURE ENVIRONMENT

Temperature and humidity of both the tape storage area and the computer room should be observed to assure they are within acceptable limits. The operating limits are given in the *TA90 Owner's Manual*, EK-OTA90-OM.

ENSURE ADEQUATE DRIVE CLEANING

Customer drive cleaning procedures should be studied. The drives should be cleaned by the customer:

- whenever a 'CLEAN' message is displayed on the pod
- every 8 hours
- after every permanent R/W error
- whenever an increase in temporary errors is observed.

If the failure is the result of a media oriented problem, contact your next level of support for further media analysis. Notify your manager of a possible media problem. **DO NOT** notify the customer of the possible media problem at this time.

Single Cartridge Fault Determination Criteria

The hardware has been verified by running all diagnostics error free.

You were sent to this page because a single cartridge is failing for one of the following reasons:

1. The maintenance package has found a physical defect with this cartridge such as a broken tape.
2. A single cartridge fails on multiple drives.
3. VAXsimPLUS analysis indicates a single cartridge in the tape library is causing a high number of read/write problems.

If the failure is caused by a single cartridge, notify the customer to purge the tape from the library.

TA90 Media Fault Determination Criteria START 140

Determining a Fault Symptom Code

The Determining a Fault System Code procedures are written to guide you through the process of determining which sense byte error code to use as a fault symptom code (FSC). Normally, VAXsimPLUS identifies the fault symptom code, determines the corrective action, and prompts you to perform the corrective action. However, there can be conditions where you would manually determine a fault symptom code. The following is a list of these conditions:

- To develop fault symptom codes from sense records in ERF reports.
- To determine FRUs ahead of time for a problem when you are away from the subsystem.
- To develop multiple fault symptom codes from several sense records in ERF reports.

If you have any of these conditions, or should you choose to manually determine a fault symptom code for any reason; use the following table to determine the fault symptom code. After you have determined the fault symptom code, return to the procedure that sent you here.

Look for sense error codes that are used to select an FSC in the following sense bytes: (four digit error codes) 10-11, 12-13, 14-15, 16-17, (two digit error codes) 21, and 23. When the two digit error codes (from sense bytes 21 or 23) are described in the maintenance guide (MG) , they are preceded by two zeros (example: drive error code 82 in sense byte 21 becomes error code 0082).

If You Have This Error Code or Indication...	Do This Action...
VAXsimPLUS not available to provide FSC/FRU callout. **Audible/visual** **Host detected errors**	Use ERF (Analyze/Error) to manually determine your fault symptom code.
All other drive CHK codes that are only displayed on a single drive.	Use the drive CHK code as the fault symptom code. Adding two high order zeros (example: CHK21 = 0021).
All other sense records that indicate a single drive failure.	Look at sense bytes 21, 16-17, and 10-11 in sequence and use the first non-zero data as the fault symptom code.
All other sense records that indicate a multiple drive failure where there are no drive CHK codes, sense byte 21 equals 00, or multiple sense records have errors across multiple drive addresses of the same subsystem.	Look at sense bytes 16-17 and 10-11, in sequence, and use the first non-zero data as the fault symptom code. **Note:** See "Error Path Isolation" on START 400 to determine the failing path if you have a dual tape control unit subsystem or if the FSC relates to a channel adapter problem.

Determining a Fault Symptom Code from the ACL LEDs

A two position Error Display Indicator is located on the Loader Control Card.

- Blank: Indicates the microcode for the Automatic Cartridge Loader is not loaded.
- 00: Indicates the Automatic Cartridge Loader is functional.
- nn: Indicates the last error that occurred on the Automatic Cartridge Loader.

  Note: **E7** must be added to the beginning of the nn value.

For example, if the nn value is 28, the Fault Symptom Code is E728.

Determining an Error Code from the A, B and Fault Indicators

The FAULT indicator lights to show that a potentially fatal error has been detected in the formatter. When FAULT stays lit, perform the following procedure.

1. Press and release the FAULT button. All three TA90 control panel indicators light in a lamp test. The A, B, and FAULT indicators stay on for as long as you press the FAULT button. After you release the FAULT button, the A, B, and FAULT indicators light (blink) to display a binary error code. The code, defined in the following table, identifies one of four areas in the formatter that may have caused the error.
2. Record the displayed fault number.
3. Press the FAULT button again for about one second and release it. The formatter then tries to clear the error. All three indicators light as long as you press the FAULT button or until the clear attempt is finished. If the error is cleared, the FAULT indicator turns off and PORT SELECT A and PORT SELECT B return to thier normal meaning. If the error remains, FAULT stays on and the PORT SELECT A and PORT SELECT B are off.
4. If the FAULT indicator stays on, run GMP (see CE/HSC).

TA90 Control Panel Error Codes

Indicator A	Indicator B	FAULT	Possible Cause
Off	Off	On	Reserved
Off	On	Off	Reserved
Off	On	On	Reserved
On	Off	Off	Buffer RAM error
On	Off	On	STI interface error
On	On	Off	TCU interface error
On	On	On	CE panel interface error

Note: On = indicator blinking; Off = indicator always off

Determining a Fault Symptom Code (Continued)

This procedure is written to guide you through the complete process of determining which sense byte error code to use as a fault symptom code (FSC).

001

(Basic Starting Point)

Do you have a drive CHK code?

YES NO

002
Is sense data available?

YES NO

003
Use ERF (Analyze/Error) to obtain sense data. Go to 004.

004
Does sense byte 7 equal 20?

YES NO

005
Go to MSG 100.

006
Go to START 315, Entry Point A.

007
Does the drive CHK code equal 82?

YES NO

008
Use the drive CHK code as the FSC.
Go to START 325, Entry Point D.

009
Check for sense data from the tape control unit that is physically attached (bolted) to the drive with the drive CHK 82.

Is format 20 sense data available for this drive address and this tape control unit?

YES NO

010
Go to step 013.

011
Do sense bytes 10-11 equal 8007?

YES NO

012
Does sense byte 21 equal 82?

YES NO

A B C

A B C

013
Check for sense data from the tape control unit NOT physically attached (NOT bolted) to the drive with the drive CHK 82.

Is format 20 sense data available for this drive address and tape control unit?

YES NO

014
Format 20 sense records are not related to drive CHK 82. Drive CHK 82 can be an intermittent drive interconnection problem. You should troubleshoot the drive CHK 82 problem, not the cause of the format 20 sense data.

Use drive 8007 as the FSC.
Go to START 325, Entry Point D.

017
For this tape control unit sense data and this drive address, do sense bytes 10-11 equal 8007?

YES NO

018
Does sense byte 21 equal 82?

YES NO

019
Go to step 014.

020
An FSC has been determined.
Record the other tape control unit's address and sense bytes. You will need this information to determine the correct control unit connection in a two tape control unit configuration.

Use 8007 as the FSC.
Go to START 325, Entry Point D.

A B D

A B D

021
An FSC has been determined. Record this tape control unit's address and sense bytes. You will need this information to determine the correct tape control unit connection in a dual tape control unit subsystem.

Use 8007 as the FSC.
Go to START 325, Entry Point D.

022
Go to step 020.

023
An FSC has been determined.
Record this tape control unit's address and sense bytes. You will need this information to determine the correct unit connection in a two tape control unit configuration.

Use 8007 as the FSC.
Go to START 325, Entry Point D.

Format 20 Sense Analysis

023

(Entry Point A)

Does sense byte 21 equal 82?

YES NO

024
Does sense byte 21 equal 64, 75, A3, or FF?

YES NO

025
Does sense byte 21 equal 00?

YES NO

026
Use sense byte 21 as the FSC.
Go to START 325, Entry Point D.

027
Do sense bytes 10–11 equal 0000?

YES NO

028
Do sense bytes 10–11 equal
33E7–33E9, 8202, or 8204?

YES NO

029
Do sense bytes 16–17
equal 0000?

YES NO

030
Use sense bytes 16–17
as the FSC.
Go to START 325, Entry Point D.

031
Do sense bytes 10–11
equal 2100 or 8E06?

YES NO

032
Do sense bytes 10–11
equal 2000 or 2010?

YES NO

033
Use sense bytes 10–11
as the FSC.
Go to START 325, Entry Point D.

034
Do sense bytes 12–13
equal 0000?

YES NO

035
Use sense bytes 12–13
as the FSC.
Go to START 325, Entry Point D.

036
Call your next level
of support.

037
Do sense bytes 12–13
equal 2000 or 2010?

YES NO

038
Do sense bytes 10–11
equal 2100?

YES NO

039
Do sense bytes 12–13
equal 0000?

YES NO

040
Do sense bytes
12–13 equal 8E06?

YES NO

041
Use sense bytes
12–13 as the FSC.
Go to START 325,
Entry Point D.

042
Do sense bytes 14–15
equal 0000
or 8E06?

YES NO

043
Use sense bytes
14–15 as the FSC.
Go to START 325,
Entry Point D.

044
Go to step 048.

045
Go to step 048.

046
Call your next level
of support.

047
Use sense bytes 12 and 13 as
the FSC.
Go to START 325, Entry Point D.

048
This can be a normal operating
condition. Using the last non–
zero error code that sent
you to this step (as an FSC), see
the FSI and determine if the pro–
blem has a non–FRU cause. Perform
any action as necessary.

Is the problem a non–FRU?

YES NO

049
Do sense bytes 16 and 17
equal 0000?

YES NO

050
Use sense bytes 16 and 17
as the FSC.
Go to START 325, Entry
Point D.

051
Use the last non–zero error
code that sent you to this
step as the FSC.
Go to START 325, Entry Point D.

052
Is other sense data available for
this tape control unit's address?

YES NO

053
Go to START 320, Entry Point B,
and determine if any other symp–
toms need to be analyzed to
determine an FSC.

054
Go to START 310, step 004.
to determine an FSC for this addi–
tional sense data.

055
Call your next level of support.

056
Does sense byte 23 equal 82?

YES NO

057
Does sense byte 23 equal 00, 64, 75, or A3?

YES NO

058
Use sense byte 23 as the FSC.
Go to START 325, Entry Point D.

059
Go to step 027.

060
Go to step 061.

061
Is format 19 or 20 sense data available for
this drive address?

YES NO

062
Use drive CHK code 82 as the FSC.
Go to START 325, Entry Point D.

063
Do sense bytes 10–11 equal 8007?

YES NO

064
An FSC has been determined.
Record the tape control unit's
address for the sense record that
does not have sense bytes 21 or 23
equal to 82. You will need this
information to determine the correct
tape control unit connection.

Use 8007 as the FSC.
Go to START 325, Entry Point D.

065
An FSC has been determined.
Record this tape control unit's address for
this sense record. You will need this
information to determine the correct
tape control unit connection.

Use 8007 as the FSC.
Go to START 325, Entry Point D.

Determining a Fault Symptom Code (Continued)

Determining a Fault Symptom Code (Continued)

(Entry Point B)

You are here because of a repeated problem without a drive CHK code .

This procedure determines FRUs and FSCs for audible, visual, and host-detected problems.

Use the FSC provided by VAXsimPLUS or ERF. If the FSC is not available, go to START 325, Entry Point D.

(Entry Point C)

This is format 21 sense for statistical data or frequent temporary errors.

Is there other format 20 sense data available for this tape control unit address?

YES NO

066
Are you here because of frequent temporary errors?

YES NO

067
Go to Entry Point B.

068
Perform ERF analysis for temporary errors.
See MSG 100.

Did the ERF error analysis indicate any temporary error problems?

YES NO

069
Consult with RDC or remote support for advice/assistance.

070
Use E800 as the FSC.
Go to START 325, Entry Point D.

071
Go to START 315, Entry Point A, using the format 20 sense data.

Determining a Fault Symptom Code (Continued) START 320

An FSC has been determined; FRUs for this FSC can now be identified and ordered.

001

(Entry Point D)

Do you wish to perform corrective action and is the subsystem hardware (TCU or drive) relating to this FSC available for corrective action?

YES NO

002
Use the FRU list provided by VAXsimPLUS.

2. Maintenance Guide (MG) FSI FRU list

Use ERF to obtain the FSC.
Look up the FRUs and possible additional causes of failure for the FSC in the FSI and EAD, if applicable.

Record the FRU list for later use in your corrective action. Schedule, with the customer, a time for corrective action. These FRUs can be obtained in advance so that when you perform the corrective action, the FRUs are available for exchanging. Also, have the sense data available.

Return to the step that brought you here, and continue any remaining actions.

003
Is this a two tape control unit configuration?

YES NO

004
Does the FSC error description in the FSI or EAD relate to a channel adapter problem?

YES NO

A B C

A B C

005
BEFORE YOU START CORRECTIVE ACTION, YOU SHOULD REVIEW THE CUSTOMER'S CLEANING PROCEDURE. THEN DETERMINE THE CLEANLINESS OF THE SUSPECTED DRIVE HEAD AND GUIDE ASSEMBLY AS DESCRIBED ON CARR-DR 130 (SEE "HEAD, DECOUPLER, AND CLEANER BLOCK CLEANING PROCEDURE"). IF THE HEAD AND GUIDE ASSEMBLY NEEDS CLEANING, CLEAN THE DRIVE USING THE TAPE CLEANER CARTRIDGE.
(SEE THE TA90 MAGNETIC TAPE SUBSYSTEM OWNER'S MANUAL, EK-OTA90-OM).
IF ADDITIONAL CLEANING IS NEEDED, PERFORM THE CLEANING PROCEDURE DESCRIBED ON CARR-DR 130. REQUEST THE CUSTOMER CLEAN THEIR DRIVES MORE OFTEN.

1. Follow the dismount procedure on PLAN 55 and have the customer dismount the units needed for corrective action.

2. Run GMP.

3. GMP passed?

YES NO

006
1. Change the FRU on the list provided by VAXsimPLUS and/or by the FSI.

2. Run GMP again.

3. GMP passed?

Yes No

A B D E F

A B D E F

Reinstall the FRU just changed.
Change the next FRU on the list.

Has the complete list been changed?

YES NO

Go to step 002.

Go to the FSI/EAD for the FSC.

008
Consider the error that was detected by the GMP to be the same error that was identified by your analysis.

Any more corrective actions to be performed?

YES NO

Repair action is completed.

Return to the procedure step that brought you here, and continue with any remaining actions.

009
Repeat this procedure for each identified error that you are to perform corrective action on.

1. Run GMP to verify subsystem operation and to complete the end of call actions.

2. Have the customer mount the drives that were dismounted.

3. Return to the procedure step that brought you here, and continue with any remaining actions.

A B D

A B D

010
Change all the FRUs on the list provided by VAXsimPLUS and the FSI.

011
Follow the "Error Path Isolation" procedures (see START 400) to determine the failing channel adapter (A-B) for the channel adapter FRU to be exchanged.

Go to step 005.

012
Follow the "Determining the Tape Control Unit Procedure" (see START 420) to determine which FRUs should be exchanged in which tape control unit.

Go to step 005.

Error Path Isolation

The purpose of the following procedure is to identify the failing path and to determine which tape control unit and which channel adapter (CA) to test for a problem, and which tape control unit FRUs are to be exchanged in which tape control unit.

1. Analyze sense byte 2 bit 4 to determine the tape control unit that detected the failure. This will determine in which tape control unit you should exchange the FRUs (except for the channel adapter) and to which tape control unit you should run GMP.

2. Use the error description theory of the EAD or the FSI for the fault symptom code (FSC) selected by the CE or the FSC you determined from "Determining a Fault Symptom Code" procedure (see START 300).

   If the error description relates to the channel adapter or a channel adapter FRU is identified, look at sense byte 9, of the sense record for the FSC. This will determine the failing channel adapter (A or B) for the tape control unit identified by sense byte 2 bit 4. You should replace the identified FRU in the channel adapter identified in sense byte 9.

3. Return to the MG section that sent you here. Run GMP diagnostics on the tape control unit with the failure as defined by sense byte 2 bit 4.

4. Replace all FRUs (except the channel adapter) in the tape control unit specified by sense byte 2 bit 4. For channel adapter FSCs, or when a channel adapter FRU is identified, replace the channel adapter specified in sense byte 9, in the tape control unit specified in sense byte 2 bit 4.

When errors occur in multi-path processors or in TA90 dual tape control unit subsystems, it may be necessary to determine the actual path to the failing device. The system error log lists the errors of its selected CUA while the TA90 subsystem is using another tape control unit for a data path. For example, data load balancing can cause this condition.

Error Path Sense Byte Definitions

Sense Byte 2 - Reporting Path and Failing Path (Except Channel Adapter) Definitions

Bits 0, 1 and 2 – Indicates the channel adapter reporting the problem for the tape control unit that detected the problem as specified in bit 4.

001 = Channel adapter A reported the problem.

010 = Channel adapter B reported the problem.

Bit 3 – Indicates the tape control unit location of the channel adapter reporting the problem.

0 = The channel adapter reporting the problem is in tape control unit 0.

1 = The channel adapter reporting the problem is in tape control unit 1.

Note: Bits 0 through 3 have very little meaning for troubleshooting. For troubleshooting, bit 4, and for channel adapter problems, sense byte 9 provides useful information.

Bit 4 – Indicates the tape control unit that detected the failure. This bit determines in which tape control unit the tape control unit FRUs (except the channel adapter) should be exchanged, and to which tape control unit GMP should be run on.

0 - Tape Control Unit 0 detected this error.

1 - Tape Control Unit 1 detected this error.

Sense Byte 9 - Failing Channel Adapter Identified for Channel Adapter FSCs

For channel adapter FSCs, sense byte 9 identifies the failing channel adapter (A or B) that is in the tape control unit that detected this error, as defined by sense byte 2 bit 4. Only sense byte 9 bits 0 through 3 have meaning to identify the failing channel adapter for channel adapter FSCs.

Sense Byte 9 Bits 0-3	Failing Channel Adapter
1000	A
0100	B

The tape control unit is specified by sense byte 2 bit 4.

Examples of Sense Data Identification of a Data Path

Single TA90 Tape Control Unit

See Figure 1 and assume the following conditions:

- The drive selected at the time of the error is drive 0.

When instances such as the above occur, sense byte 2 has no useful information. Because there is only one tape control unit, sense byte 2 bit 4 will always be zero. Only the channel adapter must be determined if the FSC error description relates to the channel adapter or a channel adapter FRU is identified. For channel adapter FSCs, sense byte 9 bits 0 through 3 identify the failing channel adapter.

Assume the FSC is 5CC3, and sense byte 9 is 0100xxxx. In this example, sense byte 9 indicates channel adapter B, which is attached to HSC 2.

If interface or HSC problems are indicated by the FSC, or other error indicators, run HSC and STI-FIPS Adapter diagnostics.

To determine the STI-FIPS adapter connection to the TA90 tape control unit channel adapter, see the customer's host processor channel configuration drawing or the I/O GEN.

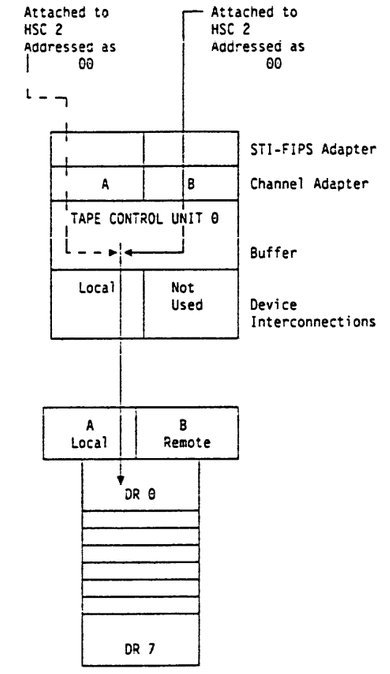

- - - Possible failing data path determined by system errorlog sense bytes.
——— Actual Failing Data Path

Figure 1. Single Tape Control Unit

Examples of Sense Data Identification of a Data Path

Dual TA90 Tape Control Units

See Page 420 and assume the following conditions:

- The drive selected at the time of the error is drive 8.
- In tape control unit 1, channel adapter A is addressed as 1.
- All TA90 channel adapters in tape control unit 0 are addressed as 0.
- Drive 8 is selected in tape control unit 1, however, tape control unit 0 has the least data load. The TA90 routes the data through the channel adapter in tape control unit 1, through tape control unit 0's buffer and drive interconnections, to drive 8.
- An error occurs while drive 8 is processing the data. The system error log will report the PCUA as 180, which is not the true data path.

In cases such as the above, the actual data path will be defined in sense byte 2 bit 4, and for channel adapter FSCs the actual failing channel adapter will be defined in sense byte 9 bits 0 through 3.

For the following two examples, the data path at the time of failure is the same, and is shown in Figure 1 on START 401. However, because each example has a failure in a different part of the subsystem, the sense data troubleshooting information is different.

Example A:

Assume the FSC is 70E4 (buffer problem), sense byte 2 is hexadecimal 30 and sense byte 9 contains no useful information.

```
Sense Byte 2 = 30
0 1 2 3 4 5 6 7
0 0 0 0 0 X X X
_______ _ _____
  |     |  └ Does not apply.
  |     └ Indicates that TCU 0 was the
  |       failing tape control unit.
  └ Indicates the reporting channel adapter
    and tape control unit at the time of the
    error, not useful for troubleshooting.
```

Looking up the 70E4 FSC in the FSI indicates that the problem relates to a buffer error. As a result, sense byte 9 has no useful meaning. In this case, all tape control unit FRUs identified by the 70E4 FSC are in tape control unit 0, as defined by sense byte 2 bit 4.

Example B:

Assume the FSC is 5CC1 (channel adapter problem), sense byte 2 is hexadecimal 08 and sense byte 9 contains 0100xxxx.

```
Sense Byte 2 = 08
0 1 2 3 4 5 6 7
0 0 0 0 1 X X X
_______ _ _____
  |     |  └ Does not apply.
  |     └ Indicates that TCU 1 was the
  |       failing tape control unit..
  └ Indicates the reporting channel adapter
    and tape control unit at the time of the
    error, not useful for troubleshooting.
```

Looking up the 5CC1 FSC in the FSI indicates that the problem relates to a channel adapter error. As a result, sense byte 9 identifies the failing channel adapter. In this case, sense byte 9 contains 0100 xxxx and indicates the channel adapter is for channel B in tape control unit 1 (as defined by sense byte 2 bit 4).

For any other FSCs in sense data, run GMP on the tape control unit specified by sense byte 2 bit 4. For any other error condition, (audible, or visual), run GMP on the tape control unit with the error condition.

- Run HSC diagnostics to the identified tape control unit channel adapter as determined for channel adapter FSCs by sense byte 2 bit 4, and sense byte 9, in the sense data or to the tape control unit and channel adapter connected to the host processor that reported the host detected error. When a failure is found, isolation between the tape control unit and the host processor channel or cables must be determined. Use diagnostics as follows:
  - Run HSC (ILEXER, ILTAPE) diagnostics.
  - Run STI-FIPS adapter diagnostics.
  - Run GMP diagnostics.

To determine which tape control unit is tape control unit 0 and which is tape control unit 1, look at the position of the TCU 0/TCU 1 switch on the tape control unit. (See LOC 1).

In some cases an error can be caused by either tape control unit. When this occurs, it may be necessary to use the maintenance package on both tape control units.

For single drive failures, the data path will have less meaning, and GMP can be used with either tape control unit to troubleshoot the failing drive.

- Use the FSC supplied by VAXsimPLUS or by or by following the "Determining a Fault Symptom Code" procedure. See START 300.

Determining the Tape Control Unit involved

This flowchart determines which FRUs are exchanged in which tape control unit, in a 2 tape control unit configuration, and in which channel adapter the channel adapter FRU should be exchanged.

001 (Entry Point A)

Does the FSC equal 8007?

YES NO

002
Does the FSC equal a CHK code or 00nn?

YES NO

004
Do sense bytes 10 and 11 or 12 and 13 equal 2000?

YES NO

005
Do sense bytes 10 and 11 or 12 and 13 equal 2010?

YES NO

006
Use sense byte 2 to find the failing path. See START 400.

See the FSI for the description of the failing FSC.

Does the FSC relate to a channel adapter problem?

YES NO

007
Unless otherwise specified by the FRU list, exchange all the tape control unit unit FRUs specified by sense byte 2 bit 4.

A B C D E

A B C D E F

008
In the tape control unit specified in sense byte 2 bit 4, replace the channel adapter FRU in the channel adapter specified in sense byte 9 bits 0-3.

009
Replace FRUs in TCU1.

010
Replace FRUs in TCU0.

014
Replace FRUs in the failing drive, and TCU FRUs in the TCU that detected an error.

015
Any tape control unit FRUs called out are for the tape control unit specified by this tape control unit's address.

Determining the Failing TCU

Use the following information to determine which is the failing tape control unit:

- For any problem, the failing tape control unit is specified by sense byte 2 bit 4.
- Use the error description from the EAD or the FSI.
- If the error description indicates a channel adapter problem, sense byte 9 (indicates the failing channel adapter). This is the failing channel adapter that should be exchanged when a channel adapter FRU is called out.
- For single drive failures, GMP can be used with either tape control unit to troubleshoot the failing drive.

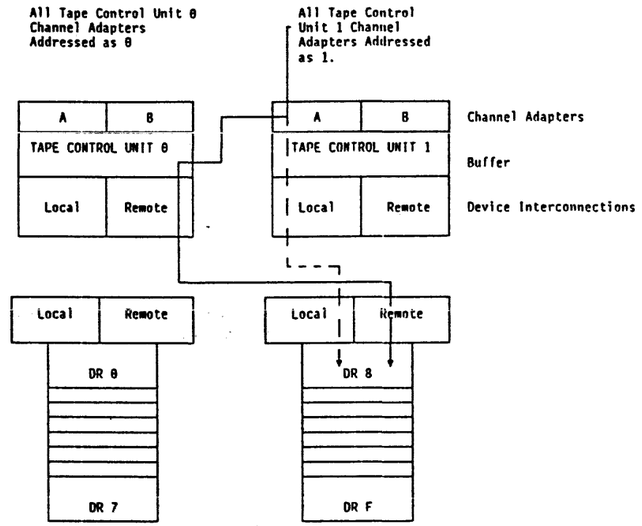

Figure 1. Dual Tape Control Units

Contents

Cartridge Description 5

Cartridge Removal by Hand 10
Before You Begin 10
Procedure A, Drives Without Automatic Cartridge Loader 10
Procedure B, Drives With Automatic Cartridge Loader 10
Identifying the Cartridge and/or Tape Condition 10
Example of a Leader Block Separated From the Magnetic Tape 10-1
Example of Magnetic Tape Pulled Out of the Cartridge 10-1
Example of the Leader Block and Threader Pin in the Machine Reel Hub 10-2
Example of the Leader Block and Threader Pin Stopped in the Tape Path 10-2
Example of the Leader Block and Threader Pin at the Cartridge Latch Assembly 10-3
Example of Operation Stopped With Tape on the Machine Reel 10-3
Leader Block and Threader Pin in the Machine Reel Hub 12
Procedure A, Drives Without Automatic Cartridge Loader 12
Procedure B, Drives With Automatic Cartridge Loader 12
Leader Block and Threader Pin Stopped in the Tape Path 14
Procedure A, Drives Without Automatic Cartridge Loader 14
Procedure B, Drives With Automatic Cartridge Loader 14
Leader Block and Threader Pin at the Cartridge Latch Assembly 16
Procedure A, Drives Without Automatic Cartridge Loader 16
Procedure B, Drives With Automatic Cartridge Loader 16

Leader Block Replacement Procedure 20

Magnetic Tape Attachment Procedure 30

Procedure to Determine if the Cartridge Caused the Failure 40

Cartridge Description

A magnetic tape cartridge is used in the TA90 subsystem. Within the cartridge is:

- A single reel of magnetic tape
- A leader block
- The cartridge file protect mechanism
- The clutch surface.

The leader block **1** is attached to the end of the magnetic tape. During the threading operation, the leader block is pulled out of the cartridge by the threader pin and moved along the tape path to the machine reel.

The cartridge file protect mechanism **2** is a thumbwheel that is moved by hand to either the File Protected or the Not File Protected position. A white dot on the face of the thumbwheel indicates that the cartridge is file protected.

The clutch surface **3** is engaged by the file reel clutch to rotate the tape reel.

On the outside of the cartridge housing can be found:

- Space for the volume identification, which is at the rear of the cartridge housing.
- Cartridge manufacturing information, which is stamped on the bottom of the cartridge housing.

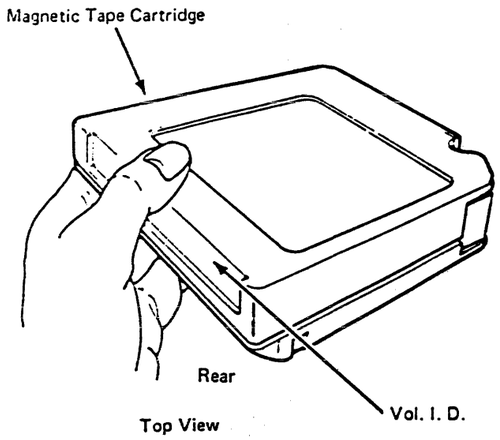

Top View

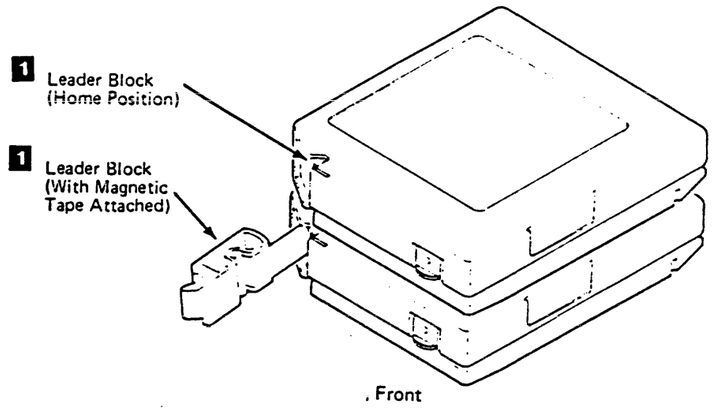

Top View

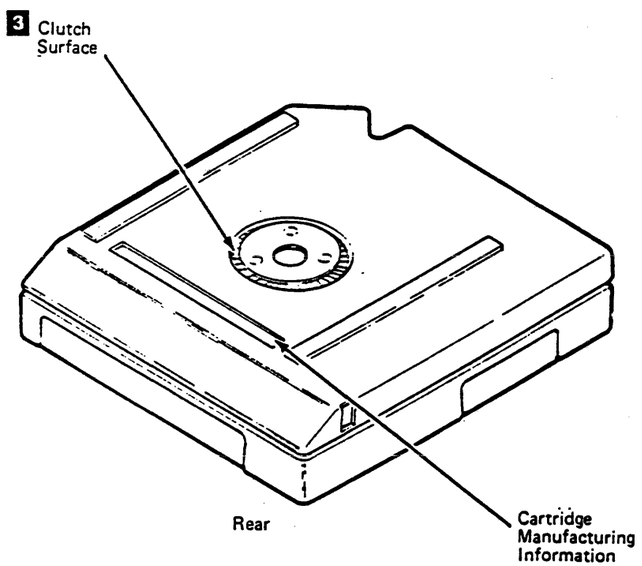

Bottom View

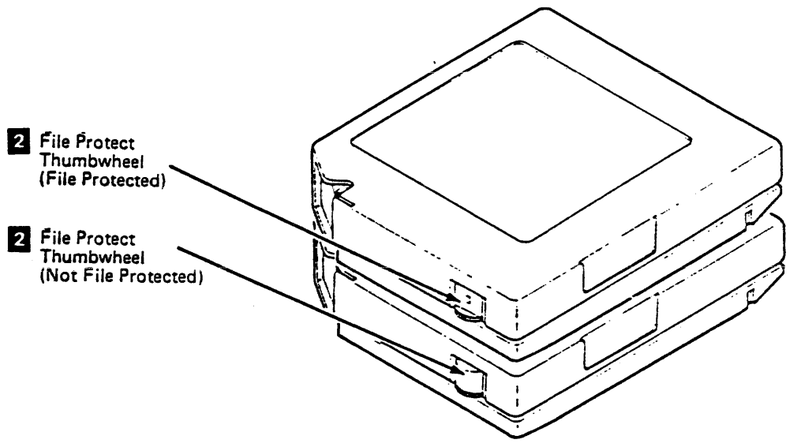

Top View

Cartridge Removal by Hand

This procedure aids you in removing a cartridge from a drive when it cannot be removed following an unload operation.

Use this page and the following pages as an aid in determining the condition of the cartridge and/or magnetic tape. After you have determined the condition, you will be directed to a procedure that will aid you in removing the cartridge.

Before You Begin

First, if you haven't already done so, attempt to remove the cartridge under power using the following procedure:

Notes:

1. For drives without the automatic cartridge loader go to procedure A.
2. For drives with the automatic cartridge loader go to procedure B.

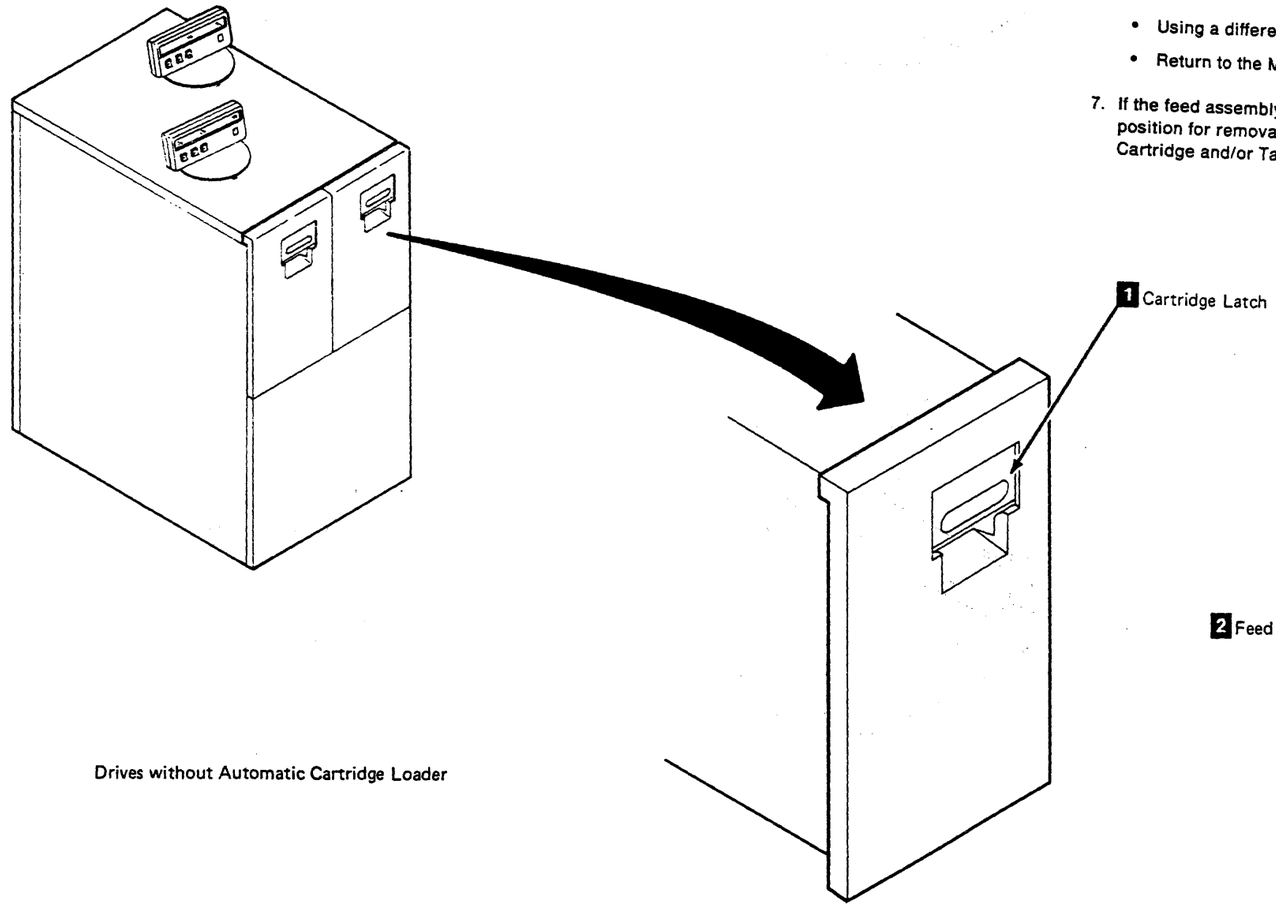

Drives without Automatic Cartridge Loader

Procedure A, Drives Without Automatic Cartridge Loader

1. Set the drive Ready/Not Ready switch to Not Ready (see LOC 1).
2. Press the drive Unload switch (see LOC 1).

   Note: It may take up to 3.5 minutes for the cartridge to rewind and unload.
3. If the cartridge latch 1 opens and you can remove the cartridge, do one of the following:
   - Using a different blank cartridge, run GMP.
   - Return to the MAP or procedure that sent you here.
4. If the latch does not open and move the cartridge into position for removal, go to step 1 of "Identifying the Cartridge and/or Tape Condition" on this page.

Procedure B, Drives With Automatic Cartridge Loader

1. Remove all cartridges from the input stack, see LOC 1.
2. Remove all cartridges from the output stack, see LOC 1.
3. Set the mode selection switch to Manual, see LOC 1.
4. Set the drive Ready/Not Ready switch to Not Ready, see LOC 1.
5. Press the drive Unload switch, see LOC 1.

   Note: It may take up to 3.5 minutes for the cartridge to rewind and unload.
6. If the feed assembly moves the cartridge back to the feed station 2 and you can remove the cartridge, do one of the following:
   - Using a different blank cartridge, run GMP.
   - Return to the MAP or procedure that sent you here.
7. If the feed assembly does not move the cartridge into position for removal, go to step 1 of the Identifying the Cartridge and/or Tape Condition on this page.

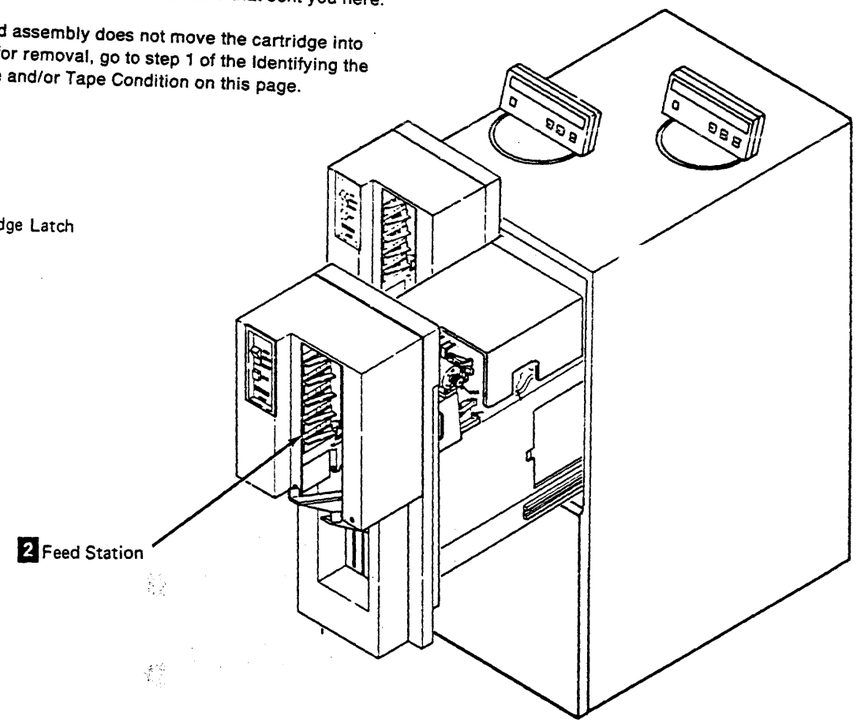

Drives with Automatic Cartridge Loader

Identifying the Cartridge and/or Tape Condition

Perform the following steps to determine the cartridge and/or tape condition:

1. Set the Online/Offline switch to Offline (see LOC 1).
2. Go to CARR-DR 8 for the procedure to ***power off*** the drive or the tape transport unit.
3. Open the drive drawer and remove the drive safety cover (see CARR-DR 2-5).
4. Inspect the drive for the cartridge and/or tape conditions shown on CART 10-1, CART 10-2, and CART 10-3. Match the cartridge/tape condition with the example and follow the directions given with that example.

Example of a Leader Block Separated From the Magnetic Tape

If the cartridge/tape condition matches this example, do the "Leader Block Replacement Procedure" on CART 20.

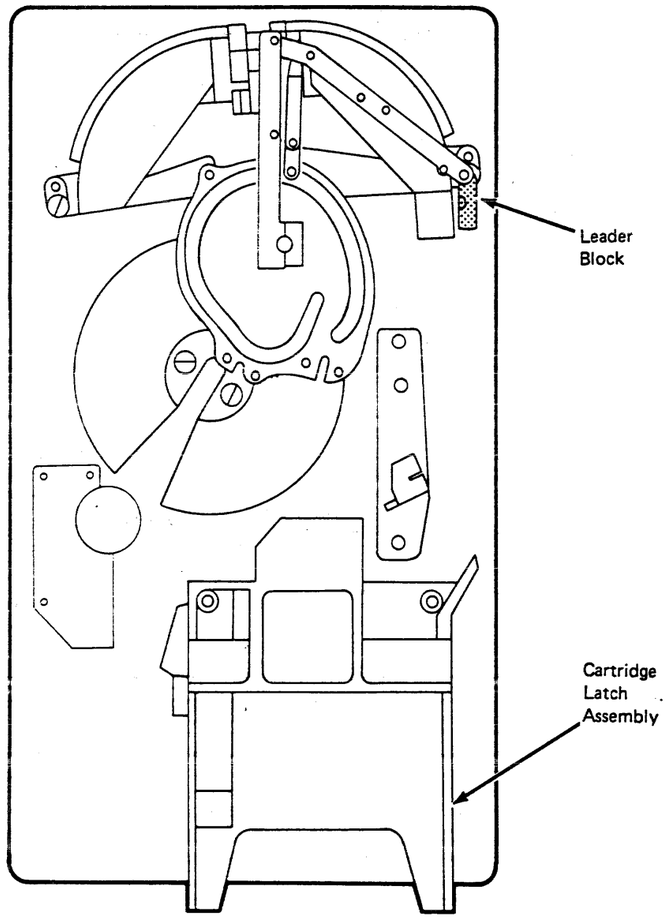

Top View

Example of Magnetic Tape Pulled Out of the Cartridge

If the cartridge/tape condition matches this example, the magnetic tape has pulled out of the cartridge and has wound onto the machine reel. Do the "Magnetic Tape Attachment Procedure" on CART 30.

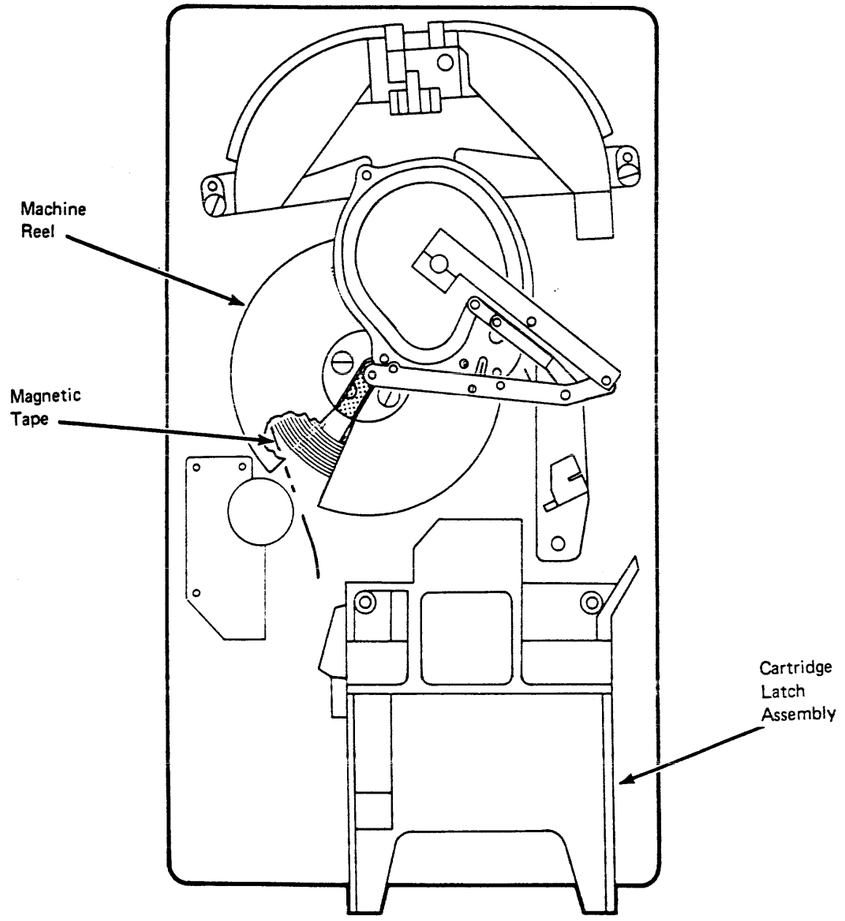

Top View

Example of the Leader Block and Threader Pin in the Machine Reel Hub

If the cartridge/tape condition matches this example, the leader block and threader pin are in the machine reel hub. Do the "Leader Block and Threader Pin in the Machine Reel Hub" procedure on CART 12.

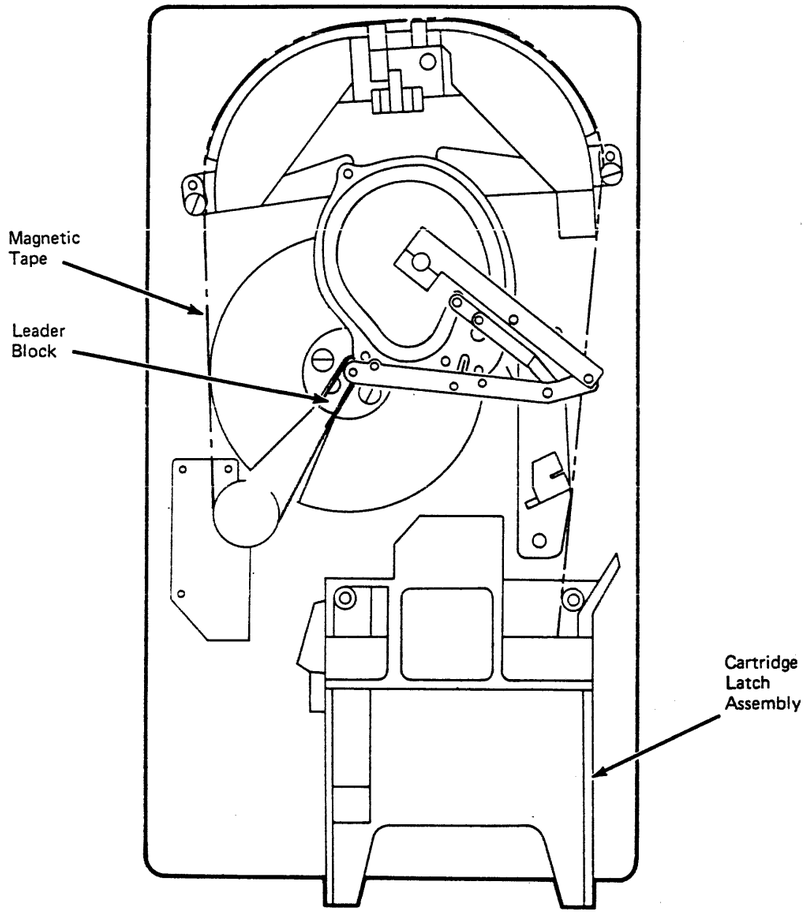

Top View

Example of the Leader Block and Threader Pin Stopped in the Tape Path

If the cartridge/tape condition matches this example, the leader block and threader pin have stopped in the tape path between the machine reel hub and the cartridge latch assembly. Do the "Leader Block and Threader Pin Stopped in the Tape Path" procedure on CART 14.

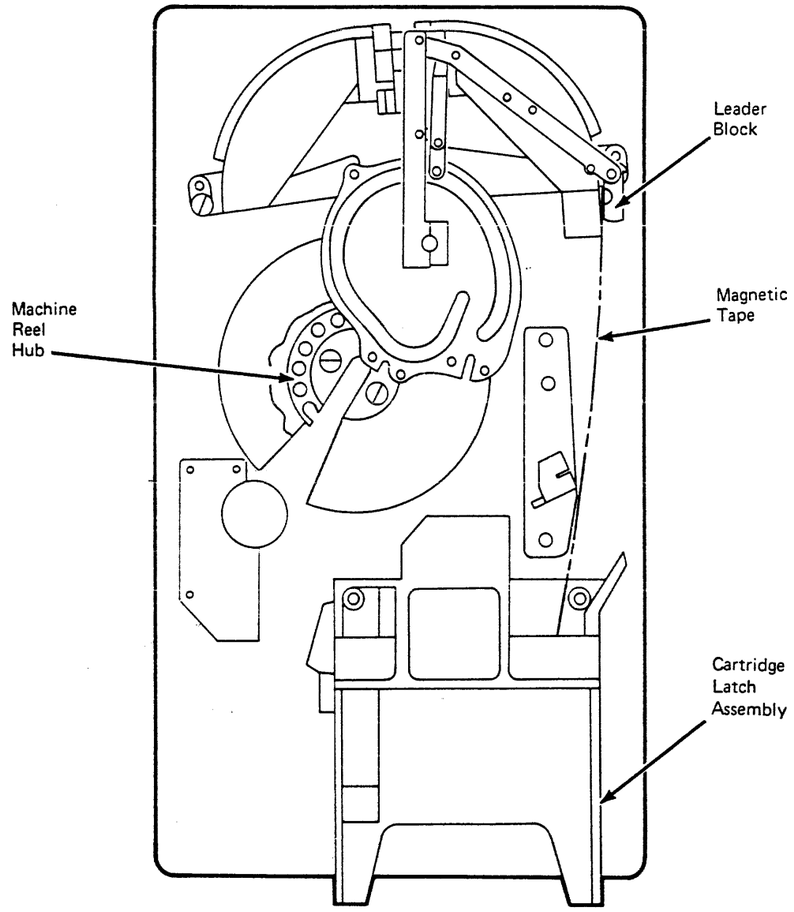

Top View

Example of the Leader Block and Threader Pin at the Cartridge Latch Assembly

If the cartridge/tape condition matches this example, the leader block and threader pin are at the cartridge latch assembly (home position), but the interlock has not rotated away from the latch. Do the "Leader Block and Threader Pin at the Cartridge Latch Assembly" procedure on CART 16.

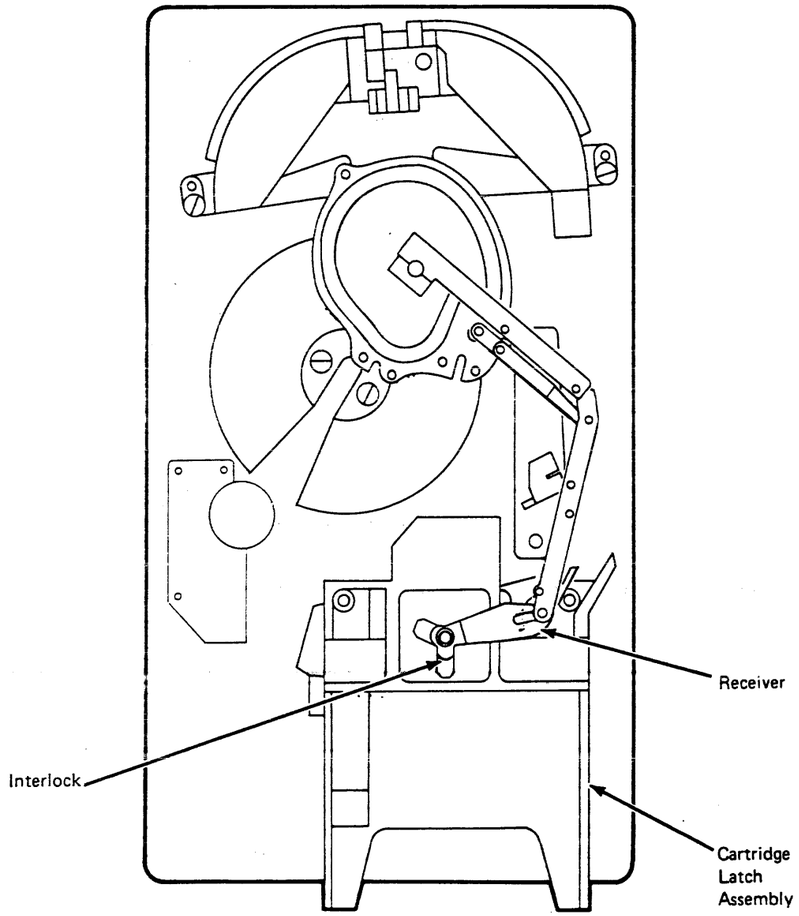

Top View

Example of Operation Stopped with Tape on the Machine Reel

If the cartridge/tape condition matches this example, the operation has stopped with tape on the machine reel. Do the "Leader Block and Threader Pin in the Machine Reel Hub" procedure on CART 12.

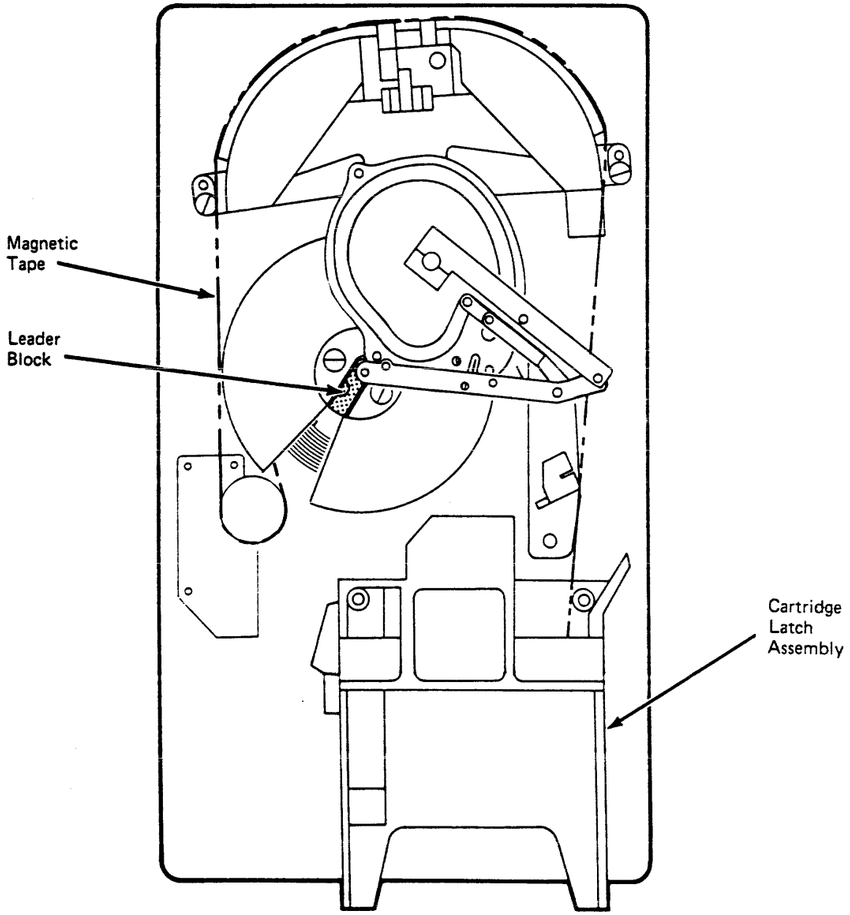

Top View

Leader Block and Threader Pin In the Machine Reel Hub

Perform the following steps to remove the cartridge by hand when the leader block and threader pin are still in the machine reel hub.

Note: See CART 13 for the following locations.

CAUTION:
The motor and shaft may be hot.

1. Find the file reel motor shaft 3. Attach the tape removal tool 2 to your socket wrench handle 1 .
2. From the bottom of the drive, slide the tape removal tool through the slot in the air baffle and onto the file reel motor shaft.
3. Turn the tool clockwise (as seen from the top of the drive) to wind the tape into the cartridge. **Warning:** Do not touch the magnetic tape because you may damage it and affect tape guiding.

   If the machine reel motor binds so that the file reel motor cannot move the tape, place your finger on the machine reel hub 4 as shown.
4. Move the hub counterclockwise, and at the same time turn the file reel motor shaft clockwise to move the tape.
5. Turn the hub until the file reel motor shaft is free to turn.
6. Continue to turn the file reel motor shaft until the leader block 5 is in position to leave the machine reel hub as shown.
7. Find the threader arm pivot point 6 above the threader assembly. Move the arm clockwise and at the same time rotate the file reel motor shaft clockwise until the leader block is in the cartridge.

   The threader pin will move the receiver 7 when the leader block is in the cartridge.

   Notes:

   a. For drives with the automatic cartridge loader go to procedure B.

   b. For drives without the automatic cartridge loader go to procedure A.

Procedure A, Drives Without Automatic Cartridge Loader

1. Press down on the latch assembly 11 to open the cartridge latch.

   If the latch does not open, go to step 3.
2. If the latch opens and the cartridge has moved into position for removal, remove the cartridge and return to the MAP or procedure that sent you here.
3. Look at the top of the latch assembly and find the pivot position 8 where the receiver 7 and the interlock 9 overlap. Move the pivot so the interlock rotates away from the latch assembly, as shown 10.
4. Press down on the latch assembly 11 to open the cartridge latch.

   If the latch does not open, request aid from your next level of support.
5. If the latch bar opens and the cartridge has moved into position for removal, remove it and return to the MAP or procedure that sent you here.

Procedure B, Drives With Automatic Cartridge Loader

1. Remove all cartridges from the input stack, see LOC 1.
2. Remove all cartridges from the output stack, see LOC 1.
3. Set the mode selection switch to Manual, see LOC 1.
4. Turn the knurled knob 13 on the load motor counterclockwise (as viewed from the end of the motor) until the latch is fully raised.
5. Place your finger on the cartridge at the point indicated 12 and push toward the front of the machine until the cartridge can be removed from the feed assembly.
6. Continue the repair action by returning to the MAP or procedure that sent you here.

Cartridge Removal by Hand (Continued)

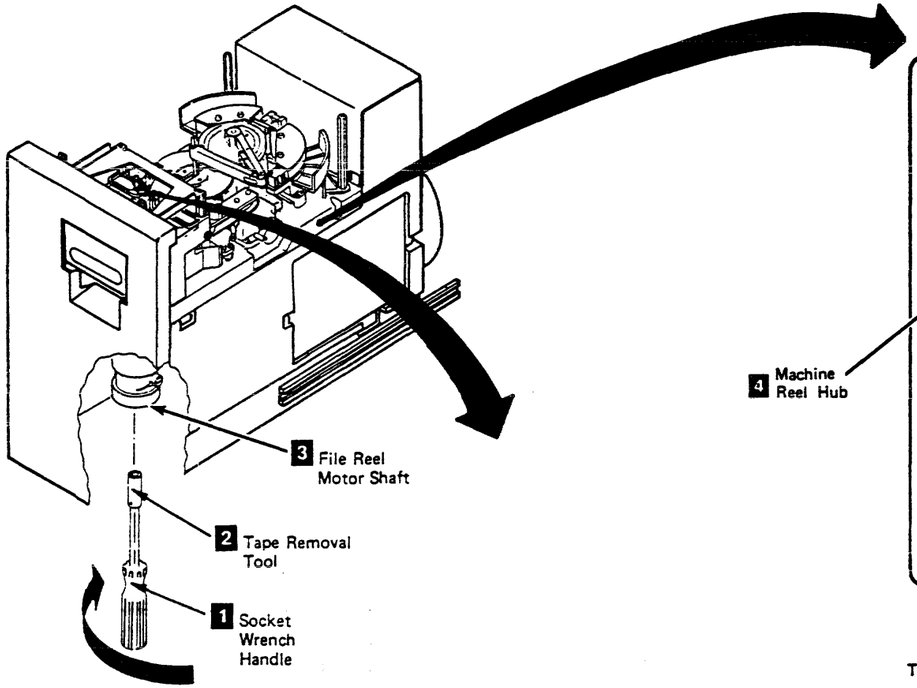

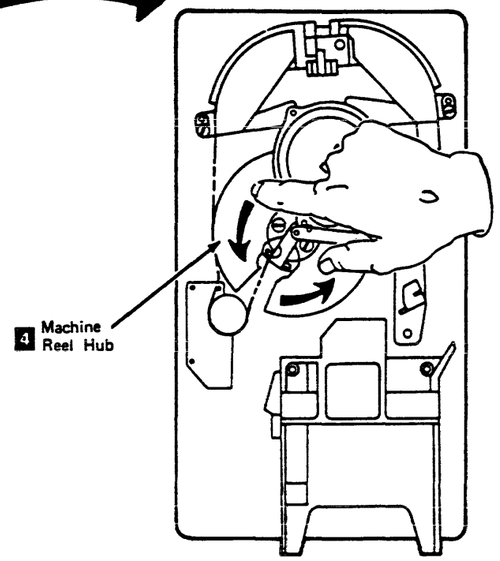

Top View

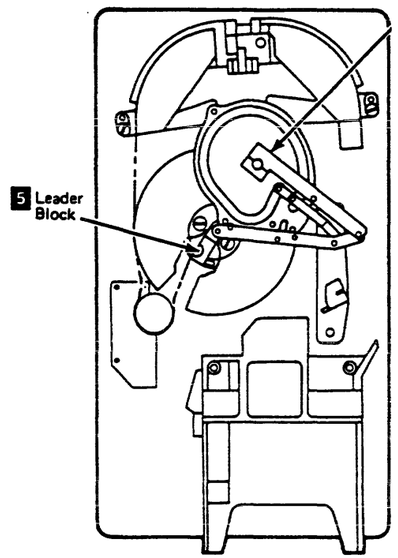

Top View

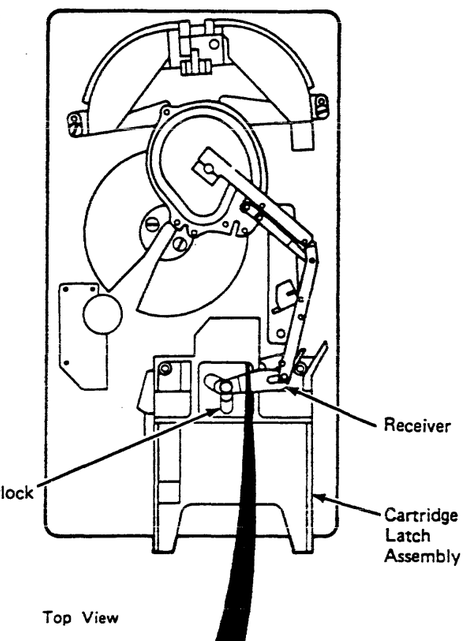

Top View

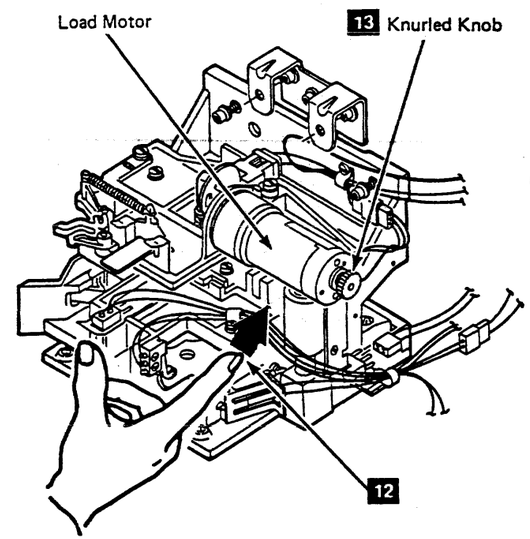

Load Assembly (Drives With Automatic Cartridge Loader)

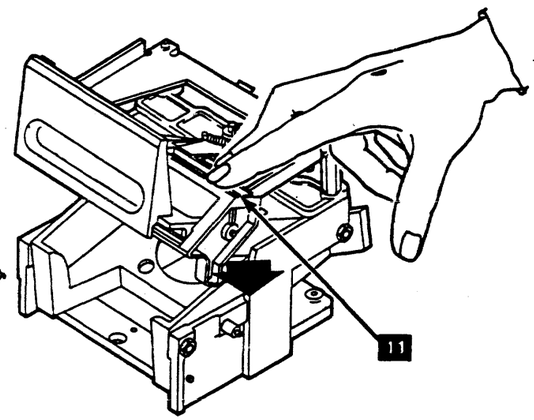

Cartridge Latch Assembly

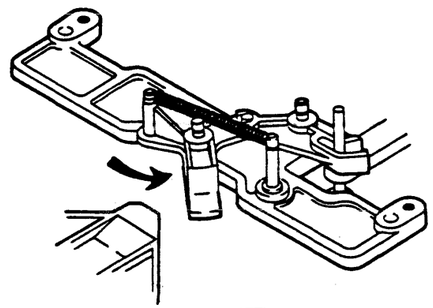

10 Receiver And Interlock In The Correct Position

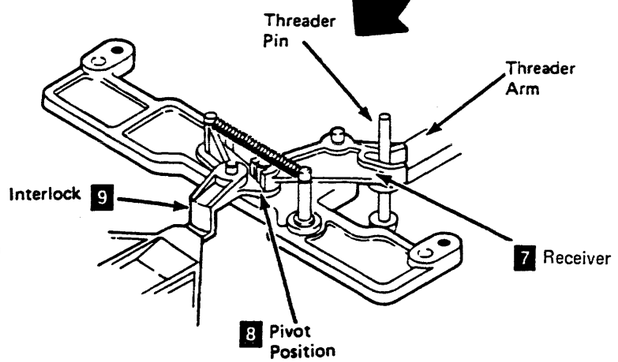

Leader Block and Threader Pin Stopped in the Tape Path

Perform the following steps to remove the cartridge by hand when the leader block and threader pin have stopped in the tape path between the machine reel hub and the cartridge latch assembly.

Note: See CART 15 for the following locations.

CAUTION:
The motor and shaft may be hot.

1. Find the file reel motor shaft 3. Attach the tape removal tool 2 to your socket wrench handle 1. From the bottom of the drive, slide the tape removal tool through the slot in the air baffle and onto the file reel motor shaft.
2. Find the threader arm pivot point 5 above the threader assembly. Move the threader arm clockwise and at the same time turn the file reel motor shaft clockwise (as seen from the top of the drive) to wind the tape into the cartridge.
3. Continue winding the tape into the cartridge until the leader block 4 is in the cartridge.

   Notes:

   a. The threader pin will move the receiver 6 when the leader block is in the cartridge.
   b. For drives with the automatic cartridge loader go to procedure B.
   c. For drives without the automatic cartridge loader go to procedure A.

Procedure A, Drives Without Automatic Cartridge Loader

1. Press down on the latch assembly 10 to open the cartridge latch.

   If the latch does not open, go to step 3.
2. If the latch opens and the cartridge has moved into position for removal, remove the cartridge and return to the MAP or procedure that sent you here.
3. Look at the top of the latch assembly and find the pivot position 7 where the receiver 6 and the interlock 8 overlap. Move the pivot so the interlock rotates away from the latch assembly, as shown 9.

Procedure B, Drives With Automatic Cartridge Loader

1. Remove all cartridges from the input stack, see LOC 1.
2. Remove all cartridges from the output stack, see LOC 1.
3. Set the mode selection switch to Manual, see LOC 1.
4. Turn the knurled knob 12 on the load motor counterclockwise (as viewed from the end of the motor) until the latch is fully raised.
5. Place your finger on the cartridge at the point indicated 11 and push toward the front of the machine until the cartridge can be removed from the feed assembly.
6. Continue the repair action by returning to the MAP or procedure that sent you here.

Cartridge Removal by Hand (Continued) CART 14

Cartridge Removal by Hand (Continued)

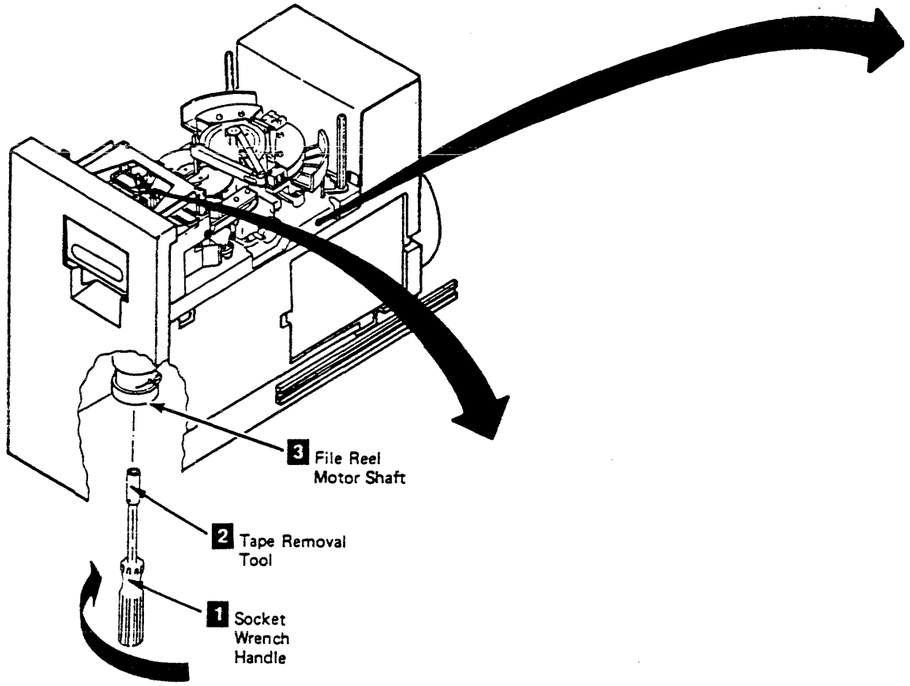

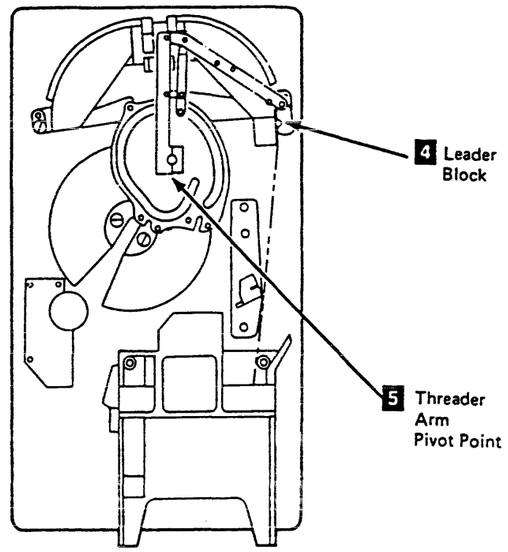

Top View

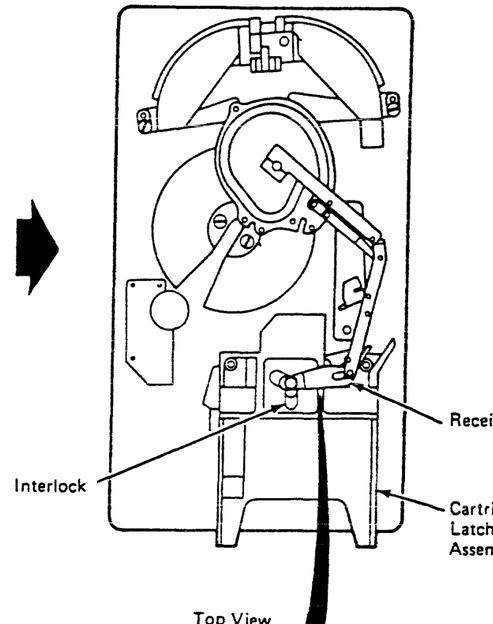

Top View

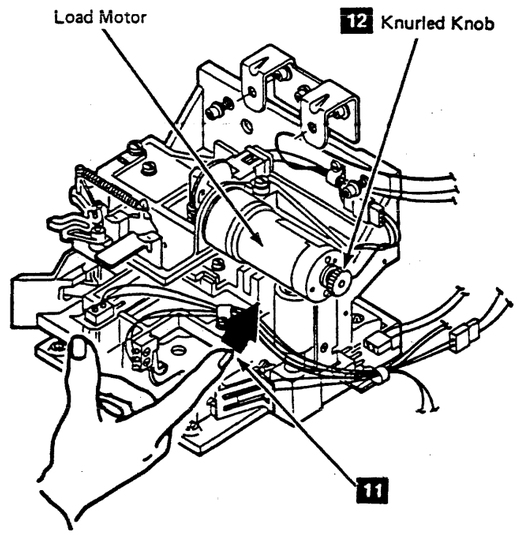

Load Assembly (Drives With Automatic Cartridge Loader)

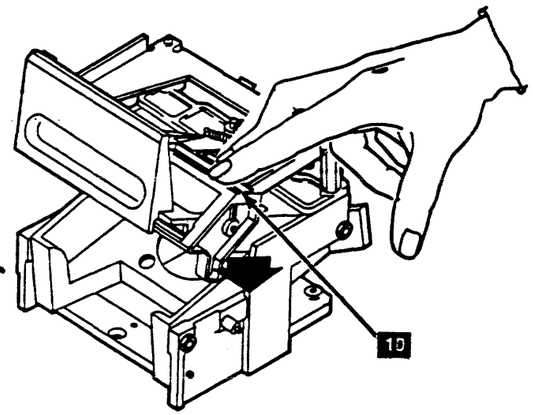

Cartridge Latch Assembly

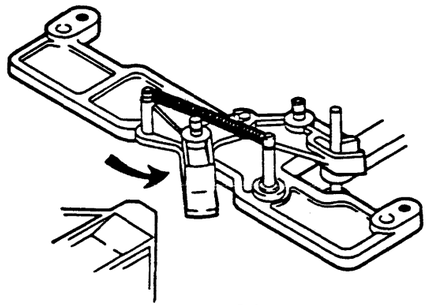

9 Receiver And Interlock In The Correct Position

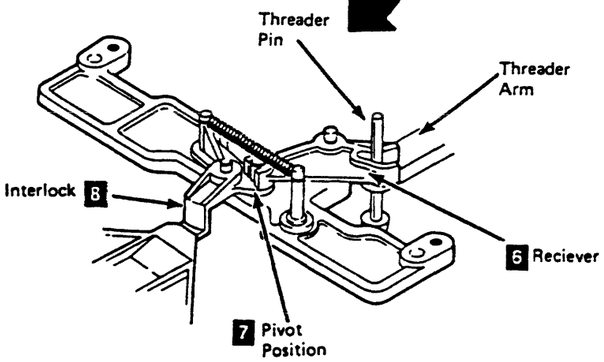

Cartridge Removal by Hand (Continued)

Leader Block and Threader Pin at The Cartridge Latch Assembly

Perform the following steps to remove the cartridge by hand when the leader block and threader pin are at the cartridge latch assembly (home position), but the interlock has not rotated away from the latch.

Note: See CART 17 for the following locations.

1. Look at the top of the latch assembly and find the pivot position 6 where the receiver 7 and the interlock 5 overlap.
2. Move the pivot so the interlock rotates away from the latch assembly, as shown 4.

   Notes:

   a. For drives with the automatic cartridge loader go to procedure B.

   b. For drives without the automatic cartridge loader go to procedure A.

Procedure A, Drives Without Automatic Cartridge Loader

1. Press down on the latch assembly 3 to open the cartridge latch.

   If the latch does not open, request aid from your next level of support.

2. If the latch opens and the cartridge has moved into position for removal, remove the cartridge and return to the MAP or procedure that sent you here.

Procedure B, Drives With Automatic Cartridge Loader

1. Remove all cartridges from the input stack, see LOC 1.
2. Remove all cartridges from the output stack, see LOC 1.
3. Set the mode selection switch to Manual, see LOC 1.
4. Turn the knurled knob 1 on the load motor counterclockwise (as viewed from the end of the motor) until the latch is fully raised.
5. Place your finger on the cartridge at the point indicated 2 and push toward the front of the machine until the cartridge can be removed from the feed assembly.
6. Continue the repair action by returning to the MAP or procedure that sent you here.

Cartridge Removal by Hand (Continued)

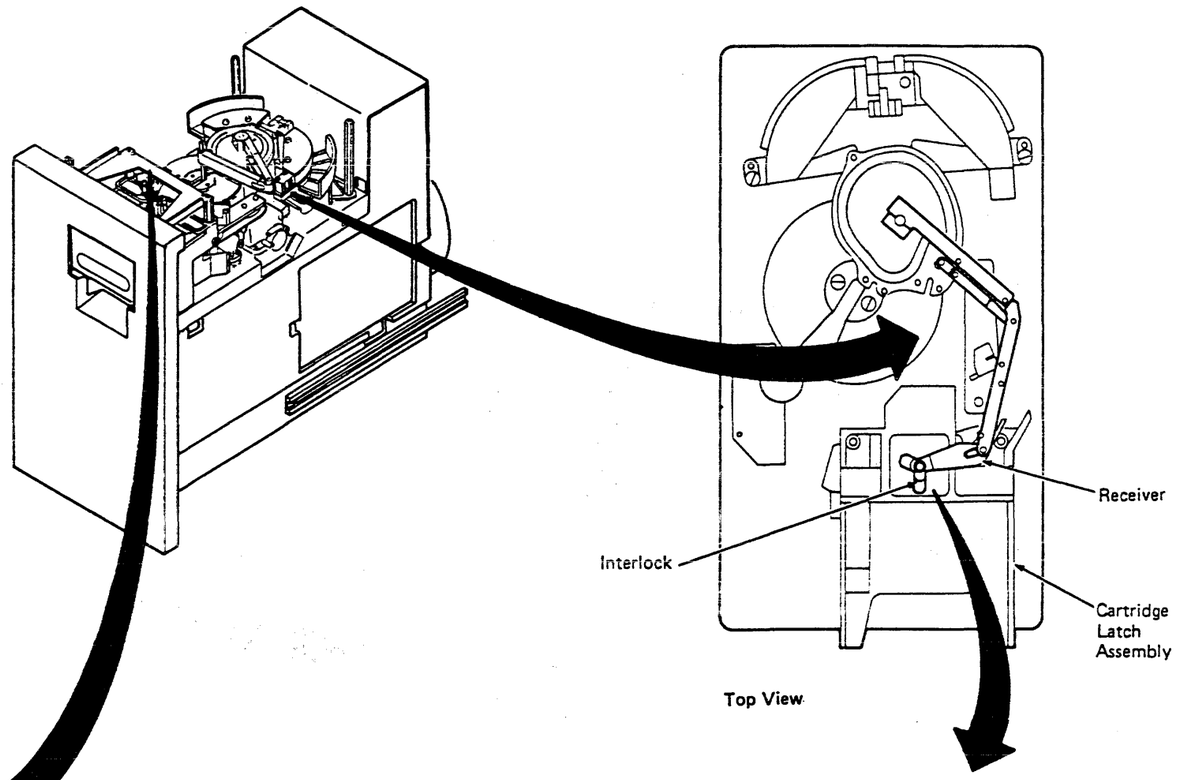

Top View

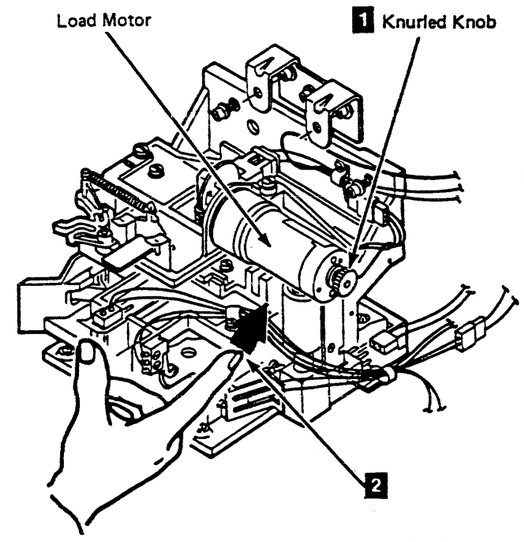

Load Assembly (Drives With Automatic Cartridge Loader)

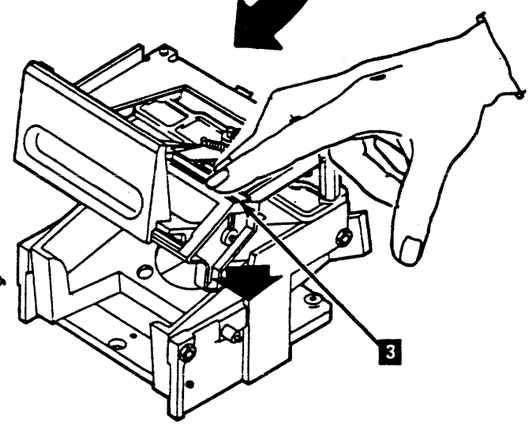

Cartridge Latch Assembly

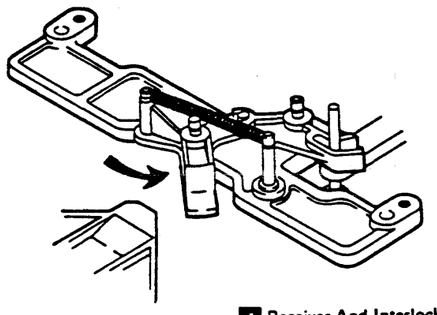

4 Receiver And Interlock In The Correct Position

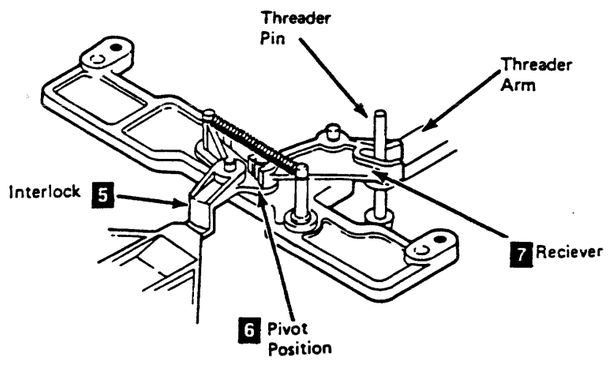

Leader Block Replacement Procedure

Perform the following steps to replace the leader block when it has separated from the magnetic tape.

Note: See CART 20 and 21 for the following locations.

Warning: This procedure should be used only when data must be copied onto another cartridge. Use of this procedure may affect the performance of the leader block during threading and unloading. Recommend that the customer destroy the cartridge after the data has been copied.

The use of any tool to remove the customer's tape may cause damage to the tape. inform the customer before continuing with this procedure.

Do not damage the edges of the tape because edge damage can affect tape guiding.

1. Remove the leader block 1 from the threader pin.
2. Move the threader arm 2 clockwise until the threader pin is at the cartridge and causes the receiver 3 to move.
3. On drives with the automatic cartridge loaders go to CART 14 for the procedure to remove the cartridge by hand, and when completed return to step 5.

   On drives without the automatic cartridge loaders press down on the latch assembly 5 to open the cartridge latch.
4. Remove the cartridge.
5. Use the clutch tool 4 to release the clutch in the cartridge. Then turn the tool to unwind about 12 inches of tape from the cartridge. Use care so as not to damage the tape.
6. Remove the clutch tool.
7. Cut the tape end so that it is 90° to the tape edge.
8. Place a new leader block in the cavity 6 of the attachment tool 8 .
9. Place the tape so that the inside (the side facing the center of the cartridge) is up, in the guide groove 7 and over the leader block. Move the end of the tape against the end of the guide cavity.
10. Close the insert guide as shown 10 , and then place the insert pin 11 into the opening of the guide.
11. Close the insertion lever 9 until it touches the insert pin.
12. Push on the handle of the insertion lever to force the insert pin and the tape into the leader block.
13. Open the insertion lever and the insert guide.
14. Remove the leader block from the attachment tool.
15. Make sure that edges of the tape are aligned with the edges of the leader block. If the edges are not aligned, go back to step 7 and repeat the procedure.
16. Use the clutch tool to wind the tape back into the cartridge.
17. Put the leader block in the cartridge.
18. Using the clutch tool carefully turn the tape reel to tighten the tape inside the cartridge.
19. Remove the clutch tool.
20. Continue the repair action by returning to the MAP or procedure that sent you here.

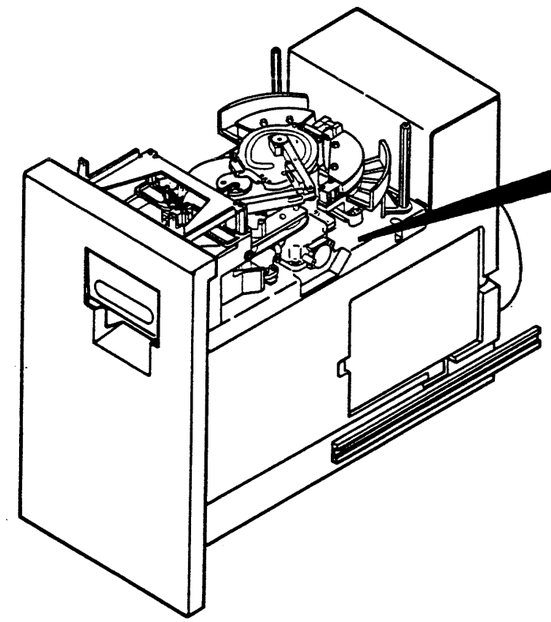

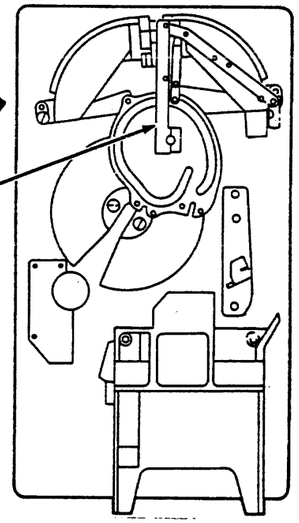

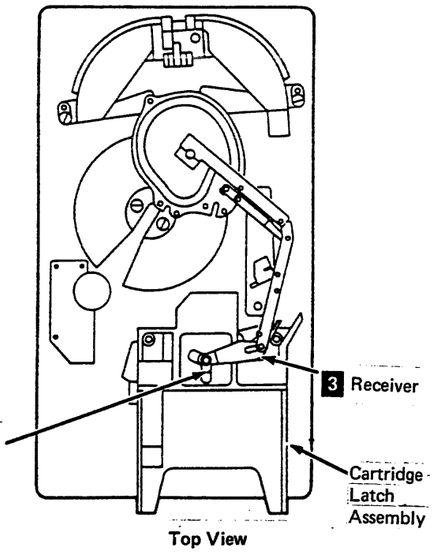

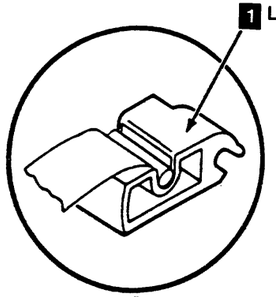

Leader Block Replacement Procedure (Continued)

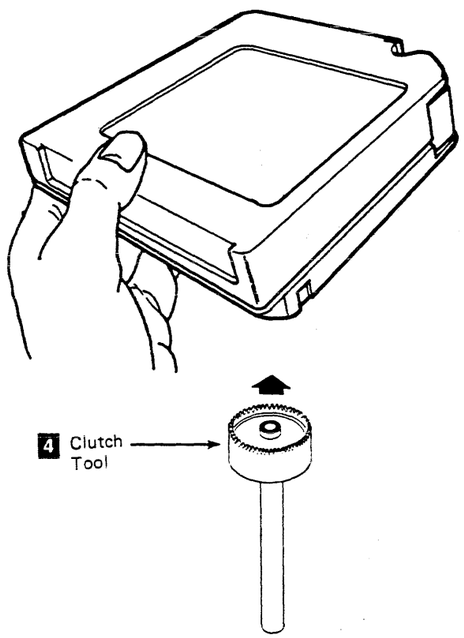

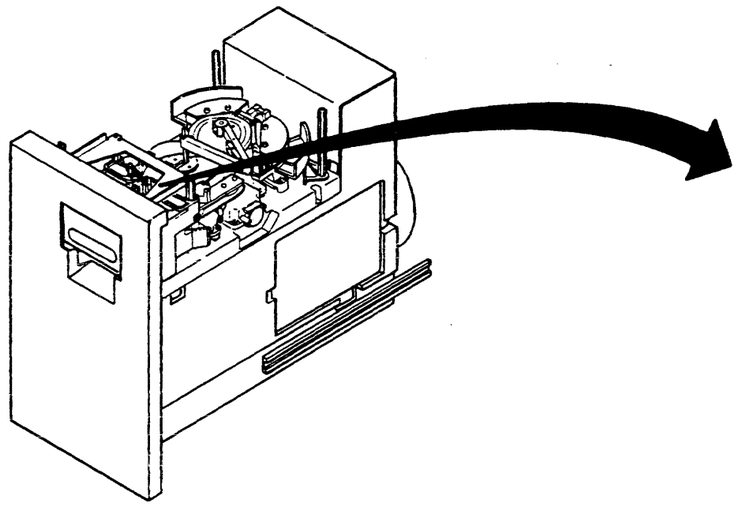

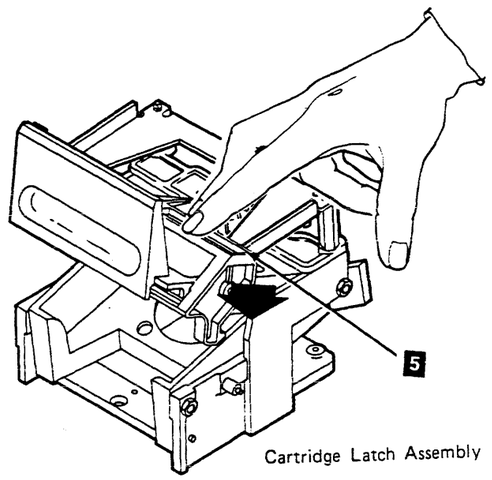

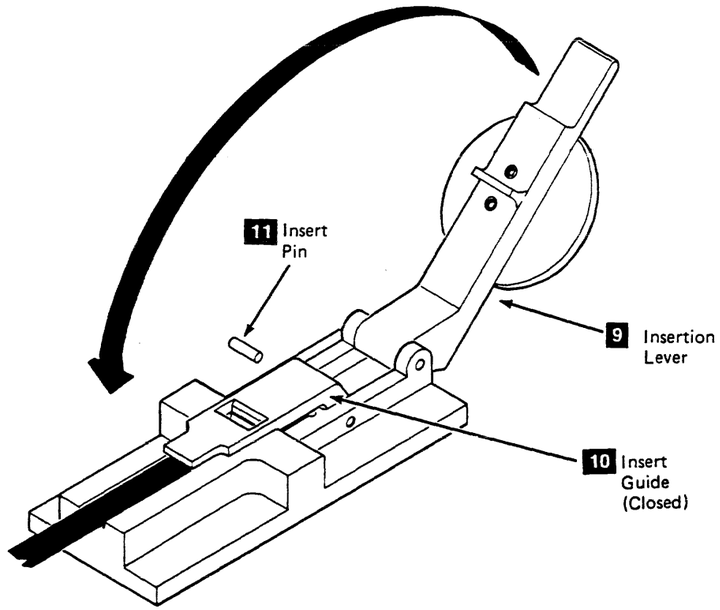

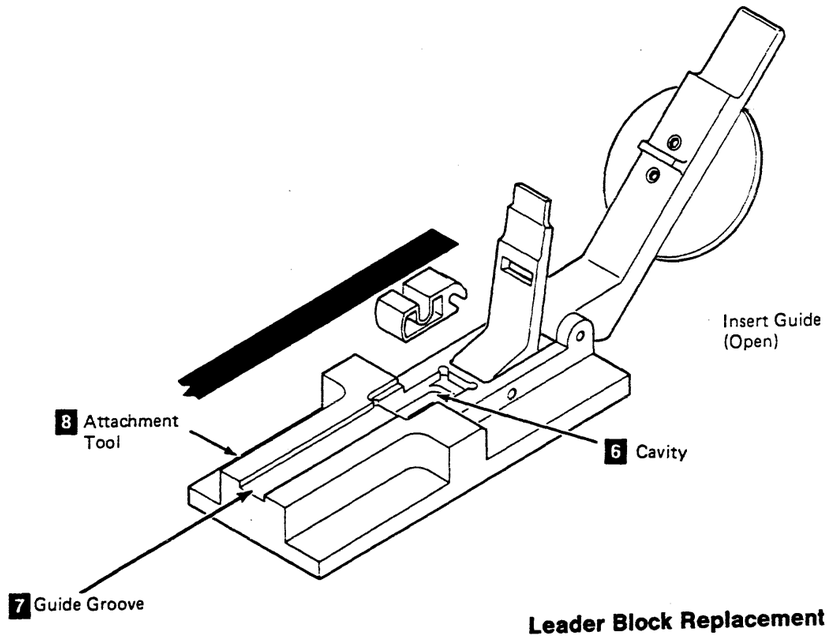

Magnetic Tape Attachment Procedure

Perform the following steps when the end of the magnetic tape has pulled out of the cartridge and has wound onto the machine reel. **Warning:** This procedure should be used only when data must be copied onto another cartridge. Use of this procedure may affect the performance of the leader block during threading and unloading. Recommend that the customer destroy the cartridge after the data has been copied.

The use of any tool to remove the customer's tape may cause damage to the tape. Inform the customer before continuing with this procedure.

Do not damage the edges of the tape because edge damage can affect tape guiding.

1. Pull the tape by hand along the tape path until it is at the opening to the cartridge.

   Note: If the machine reel motor binds and does not allow the tape to move, place your finger on the machine reel hub **1** as shown. Move the hub counterclockwise, and at the same time move the magnetic tape.

2. Attach a 5 centimeter (2-inch) piece of double-stick cellophane tape to the shiny side of the magnetic tape. Leave a 2.5 centimeter (1-inch) overlap of cellophane tape.

   Attach the protruding end of the cellophane tape to the eraser end of a pencil or similar object.

   Note: Make sure the cartridge is in the latched position.

3. Insert the pencil and the tape with the cellophane tape into the cartridge opening and attach the cellophane tape to the cartridge hub **2** . Remove the pencil without disturbing the cellophane tape that is attached to the hub.

   CAUTION:
   The motor and shaft may be hot.

4. Find the file reel motor shaft **3** . Attach the tape removal tool **4** to your socket wrench handle **5** .

5. From the bottom of the drive, slide the tape removal tool through the slot in the air baffle and onto the file reel motor shaft.

6. Turn the tool clockwise (as seen from the top of the drive) to wind the magnetic tape onto the cartridge. Make at least one complete revolution of the hub.

   Note: If the cellophane tape pulls off the hub, attach the cellophane tape again.

7. Rotate the machine reel hub counterclockwise, and at the same time rotate the file reel motor shaft clockwise to make it easier to wind the tape onto the cartridge hub.

8. Set the Drive Power switch or the ac power circuit breaker to On (see LOC 1).

9. Install the front safety cover (see CARR-DR 2-2 or 2-4) if removed.

10. Press the Unload switch to fully wind the tape into the cartridge. If the tape does not fully wind into the cartridge, request aid from your next level of support.

11. Remove the cartridge from the drive.

12. Continue the repair action by returning to the MAP or procedure that sent you here.

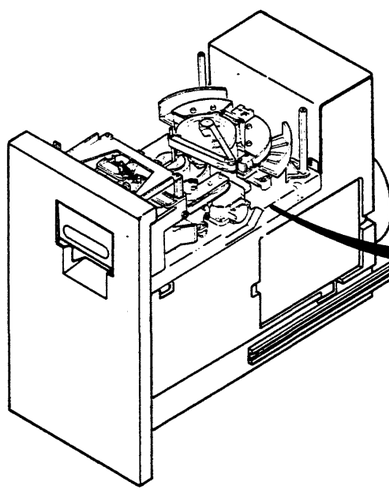

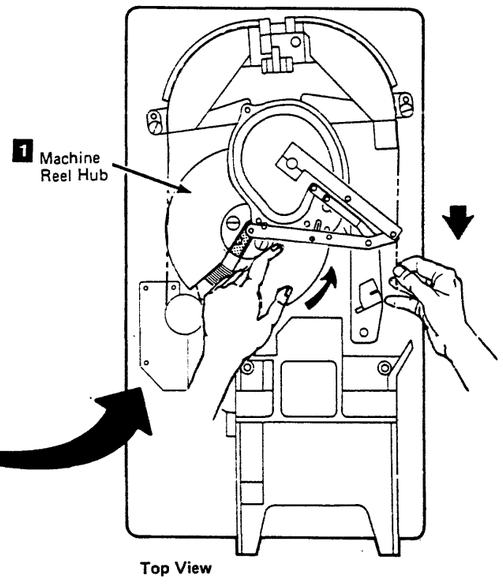

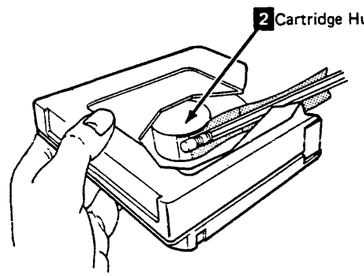

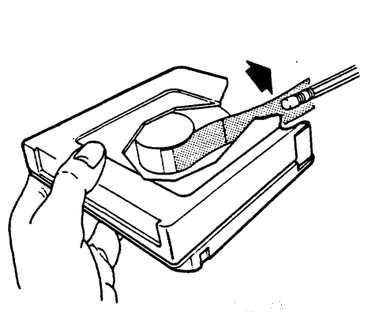

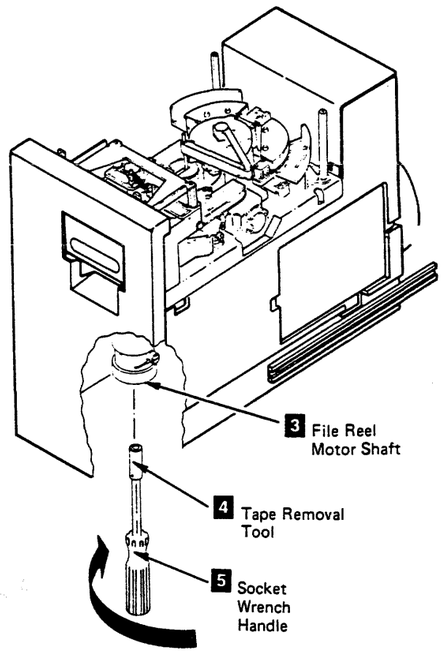

Procedure to Determine if the Cartridge Caused the Failure

This page contains the steps needed to determine if the drive failure is caused by a cartridge. Follow the procedure on this page for the CHK Codes you have.

CHK 14

CHK 14 occurs when the drive times out while trying to remove tape slack (loose wraps) at the beginning of the load operation, before the thread operation starts. The file reel motor is slowly turned backwards until it is stopped by the tape which is attached to the leader block.

CHK 14 can be caused by a cartridge if:

- There are excessive loose wraps in the cartridge.
- The tape is not attached to the leader block.

1. Load a cartridge, other than from the cartridge that caused the original failure on the drive.
2. Does CHK 14 appear on the drive display ?

   YES - Go to Chart A.

   NO - Go to Chart B.

CHK 21

CHK 21 occurs when the drive threading mechanism is slow or stalled. This can occur at the time the leader block is being put into the slot in the machine reel.

CHK 21 can be caused by a cartridge if:

- The leader block is not attached to the tape correctly.
- The leader block is damaged (burrs or marks).
- The cartridge clutch is sticking.

1. Load a cartridge other than the cartridge that caused the original failure on the drive.
2. Does CHK 21 appear on the drive display ?

   YES - Go to Chart A.

   NO - Go to Chart B.

CHK 25

CHK 25 occurs when the drive threading mechanism is slow or stalled during an unload operation, or the leader block is not attached during a load retry.

CHK 25 can be caused by a cartridge if the leader block is loose when the cartridge is loaded.

If the leader block is loose, the threader pin doesn't catch the leader block when the load operation starts. When the drive tries to recover, it cannot return to the home position because the leader block is in the way.

1. Load a cartridge, other than from the cartridge that caused the original failure on the drive.
2. Does CHK 25 appear on the drive display ?

   YES - Go to Chart A.

   NO - Go to Chart B.

CHK 28

CHK 28 occurs when the tape is not attached to the threader pin, or the file reel motor turns backwards during the threading operation.

CHK 28 can be caused by a cartridge if, during a threading operation:

- The leader block falls off the threader pin.
- The tape breaks or is damaged.

1. Load a cartridge other than the cartridge that caused the original failure on the drive.
2. Does CHK 28 appear on the drive display ?

   YES - Go to Chart A.

   NO - Go to Chart B.

CHK 2B

CHK 2B occurs when the drive times out while trying to remove tape slack after tape tension is lost as a result of a power failure or a device hard error condition. The file reel motor is slowly turned backwards until two machine reel revolutions have been detected. Then an unload operation is performed automatically.

CHK 2B can be caused by a cartridge if:

- The leader block is not attached to the tape.
- The cartridge clutch is sticking.
- The tape breaks or is damaged.
- Some foreign object is between the file reel and the cartridge.

1. Load a cartridge other than the cartridge that caused the original failure on the drive.
2. Does CHK 2B appear on the drive display ?

   YES - Go to Chart A.

   NO - Go to Chart B.

CHART A

Press the Unload button and remove the cartridge from the drive.

Because the problem occurs on more than one cartridge, the problem is NOT caused by a cartridge.

CHART B

Remove the cartridge from this drive and load the cartridge that failed into several different drives.

Does that cartridge fail on other drives?

```
YES NO
 |   |
 |   The problem is NOT caused by the cartridge.
 |
 |   Go to the EAD Section for this CHK for
 |   additional troubleshooting information.
 |
The problem is caused by the cartridge.

Go to START 140.
```

Notes CART 42

Notes CART 42

Contents

Pneumatic System 3

Pneumatic System Measurements 5
Pressure Measurement 5
Vacuum Measurement 5

Air Pressure Loss 10
Before You Begin 10
Analysis Procedure 10
Failure in the Primary Pneumatics System 12
Pneumatics Problem on a Single Drive 20

Pneumatic Checkout Procedure 30
Introduction 30
Vacuum Checks 30
Analysis Procedure 30

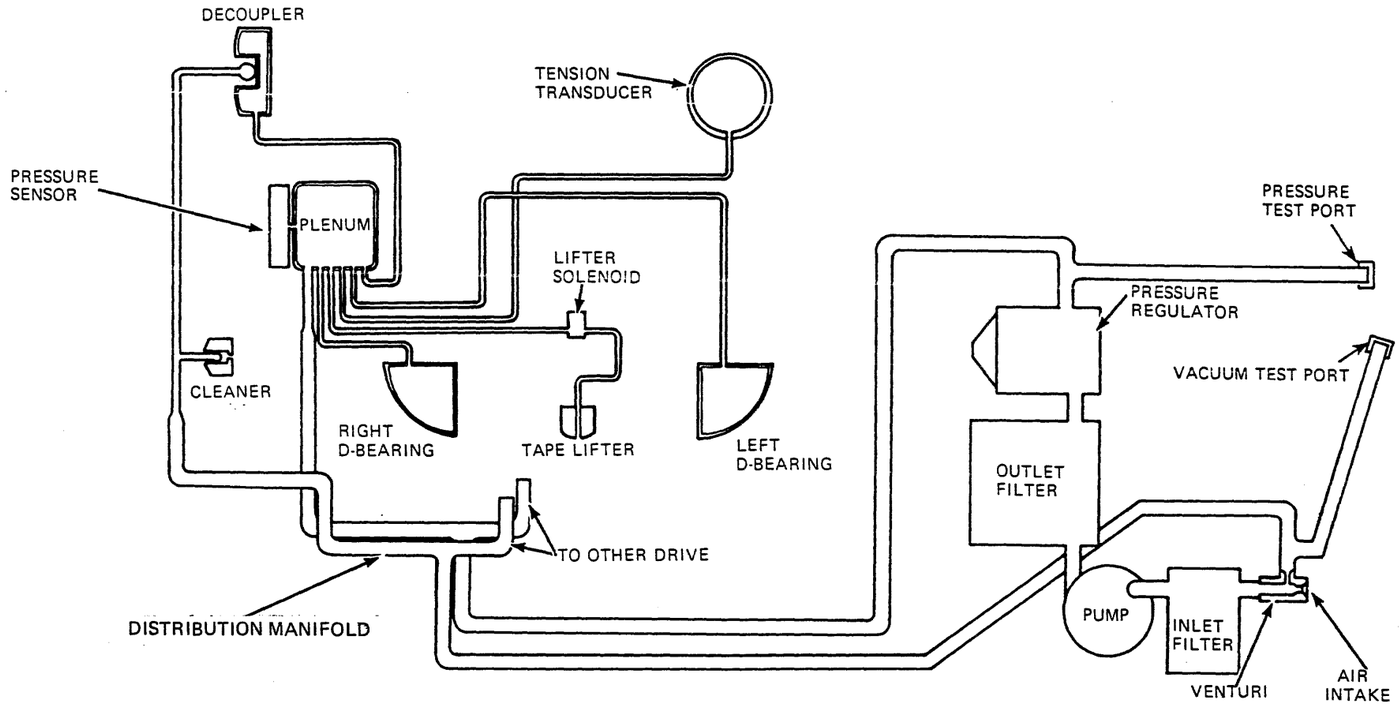

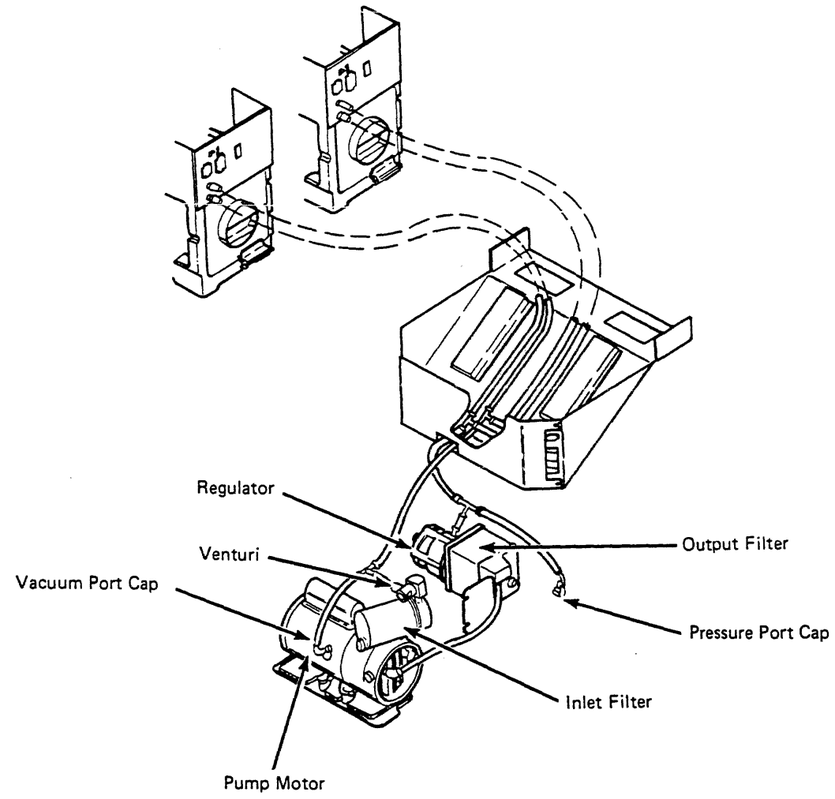

Pneumatics Supply Assembly

Pneumatic System Measurements

The following procedures are for measuring the air pressure and the vacuum of the pneumatic system. Use pressure/vacuum gauge kit to take the measurements.

Note: See PNEU 6 for the following locations.

Warning: Ensure that both drives in the tape transport unit are offline to the system before continuing with the following measurements or adjustments.

Pressure Measurement

1. Set the tape transport unit ac power circuit breaker to off (see LOC 1).
2. Remove the pressure port cap 2.
3. Connect a hose between the pneumatic assembly pressure port and the gauge.
4. Set the tape transport unit ac power circuit breaker to on.
5. Load tapes into both drives of the tape transport unit.
6. The meter should indicate 31 + 3, - 0.6 kilopascals (125 + 12, - 2.5 inches). Record the pressure.

   If regulator adjustment is required, go to Step 7; if adjustment is not required, go to Step 10.

To Adjust the Regulator

Note: Do not make any regulator adjustments unless the pneumatic system for this tape transport unit has been checked for a dirty filter, or hoses that are loose, clogged, open or pinched. A defect in the pneumatic system can give false pressure readings.

7. Remove the small plastic plug from the adjustment port (end, center) of the regulator.
8. Insert an allen wrench into the adjustment port and engage the recessed adjustment screw.
9. To decrease the pressure, turn the adjustment screw clockwise. To increase the pressure, turn the adjustment screw counterclockwise.
10. When the pressure is correct (31 + 3, - 0.6 kilopascals), remove the wrench and replace the plastic plug.
11. Remove the tapes from both the drives of the tape transport unit.
12. Set the tape transport unit ac power circuit breaker to OFF (see LOC 1).
13. Disconnect the hose from the pressure/vacuum gauge to the pressure port.
14. Replace the pressure port cap.
15. Set the tape transport unit ac power circuit breaker to on.
16. Continue by returning to the MAP or procedure that sent you here.

Vacuum Measurement

1. Set the tape transport unit ac power circuit breaker to off (see LOC 1).
2. Remove the vacuum port cap 1.
3. Connect a hose between the pneumatic assembly vacuum port and the gauge.
4. Set the tape transport unit ac power circuit breaker to on.
5. Load tapes into both drives of the tape transport unit.
6. The gauge should indicate 5.75 ± 2.25 kilopascals (23 ± 9.0 inches).

   If vacuum adjustment is required, go to step 7; if adjustment is not required, go to Step 8.

To Adjust the Vacuum

Note: Do not make any vacuum adjustments unless the pneumatic system for this tape transport unit has been checked for a dirty filter, or hoses that are loose, clogged, open, or pinched. A defect in the pneumatic system can give false vacuum readings.

7. The venturi 3 has a locking setscrew and an adjusting setscrew.

   a. Loosen the locking setscrew 5.

   b. Turn the adjusting setscrew 4 until the vacuum gauge is correct (5.75 ± 2.25 kilopascals).

   c. Tighten the locking setscrew.

8. Remove the tapes from both the drives of the tape transport unit.
9. Set the tape transport unit ac power circuit breaker to off.
10. Disconnect the hose from the pneumatic assembly.
11. Replace the vacuum port cap.
12. Set the tape transport unit ac power circuit breaker to on.
13. Continue by returning to the MAP or procedure that sent you here.

Pneumatic System Measurements (Continued)

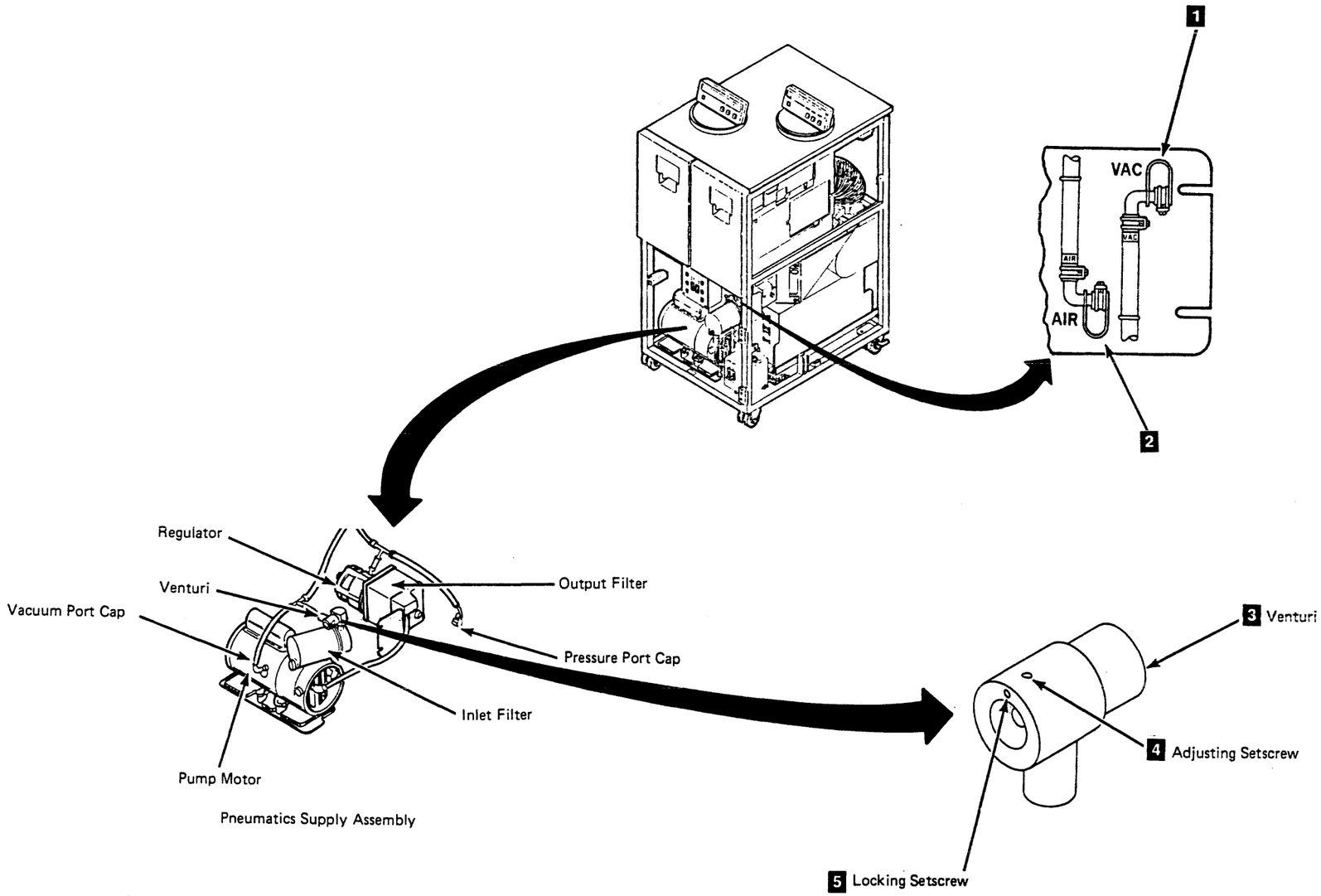

Air Pressure Loss

The following procedure helps you in isolating pneumatic system failures when the problem indication is CHK 46.

A CHK 46 occurs when the plenum pressure sensor does not get enough air pressure to close the pressure sensor contacts.

Follow this procedure, unless otherwise directed, until the repair is made. After the repair is made, this procedure will direct you to your next action.

Note: See PNEU 11 for the following locations.

Before You Begin

Set the drive Online/Offline switch to Offline on both drives (see LOC 1).

If there is a cartridge in either drive, try to remove it using the following procedure. If the cartridge cannot be removed, go to "Cartridge Removal by Hand" on CART 10 for further aid.

1. Set the drive Ready/Not Ready switch on both drives to Not Ready (see LOC 1).
2. Remove the cover on pin side of the drive logic board 1, and jumper pin 02A-A1G6A02 (+ air pressure loss) to pin 02A-A1B2U08 (Ground).
3. Press the Reset switch (see LOC 1).
4. Press the Unload switch (see LOC 1).
5. After the cartridge has unloaded, remove the jumper.
6. Remove the cartridge.

Analysis Procedure

7. Remove the tape transport unit front cover (See CARR-DR 2-1), and find the pump motor 4.
8. Determine if the pump motor is running.

   Note: To determine if the pump motor is running, listen for the sound of the motor running or remove the pressure port cap 3 and feel for escaping air.

```
001
Is the pump motor running?

YES NO
|   |
|   002
|   Check for 220 V ac at J4 on the tape transport unit dc
|   power supply (see LOC 1) as follows:
|
|   a.  Remove plug P4.
|
|   b.  Measure the voltage between pins 1 and 3.
|       See PWR 20 for the voltage tolerance.
|
|   Is the voltage within tolerance?
|
|   YES NO
|   |   |
|   |   003
|   |   Exchange the following FRU.
|   |   For the removal and replacement
|   |   procedures, see CARR-DR 1-1.
|   |
|   |     FRU095 - DC power supply
|   |
|   |   Is the voltage within tolerance now?
|   |
|   |   YES NO
|   |   |   |
|   |   |   004
|   |   |   Request aid from your next level of
|   |   |   support.
|   |   |
|   |   005
|   |   Replace plug P4.
|   |
|   |   Go to "Exit Procedure" on this page.
|   |
|   006
|   Exchange the following FRU.  For the removal
|   and replacement procedures, see CARR-DR 1-1.
|
|     Note:  If the pump motor (FRU030) or the
|     regulator (FRU031) is exchanged, the output
|     filter (FRU032) must also be exchanged.
|
|     FRU030 - Pump motor
|
|   Is the pump motor running now?
|
|   YES NO
|   |   |
|   |   007
|   |   Request aid from your next level of support.
|   |
|   008
|   Go to "Exit Procedure" on this page.
|
009
Go to step 010.

010
Measure the pressure at the regulator
(see PNEU 5).

     DO NOT attempt to adjust the pressure
     regulator during the failure isolation
     procedure.

Is the pressure out of tolerance (see PNEU 5)?

YES NO
|   |
|   011
|   Because the pressure is within tolerance,
|   the problem must be a single drive failure.
|
|   Go to PNEU 20, "Pneumatics Problem on a
|   Single Drive," for the failing drive.
|
012
The pressure is out of tolerance.  Clamp the
plenum supply hose 2 on drive 0.  See
CARR-DR 3-1.  Measure the pressure at the
regulator.

Is pressure within tolerance (see PNEU 5)?

YES NO
|   |
|   013
|   Go to step 018.
|
014
Remove the clamp from drive 0.  Clamp the
plenum supply hose on drive 1.  Measure the
pressure at the regulator.

Is pressure within tolerance (see PNEU 5)?

YES NO
|   |
|   015
|   Remove the clamp from drive 1.
|
|   Go to PNEU 20, "Pneumatics Problem on a
|   Single Drive," for drive 0.
|
016
Go to step 017.

017
The failure is in the primary pneumatic system
and not in either drive.

Remove any clamps on the plenum supply hoses.

See PNEU 3 for a diagram of the pneumatic
system, and PNEU 5 for the correct pressure
and vacuum tolerances; then go to "Analysis
Procedure" on PNEU 12 and follow the steps.

018
Remove the clamp from drive 0.  Clamp the plenum
supply hose on drive 1.  Measure the pressure at
the regulator.

Is pressure within tolerance (see PNEU 5)?

YES NO
|   |
|   019
|   Go to step 017.
|
020
Remove the clamp from drive 1.

Go to PNEU 20, "Pneumatics Problem on a
Single Drive," for drive 1.
```

Exit Procedure

1. Refer to PNEU 5 to measure the pressure and vacuum. Adjust if necessary.
2. Set the Online/Offline switch to Online on BOTH drives.
3. Install a scratch tape and run GMP.

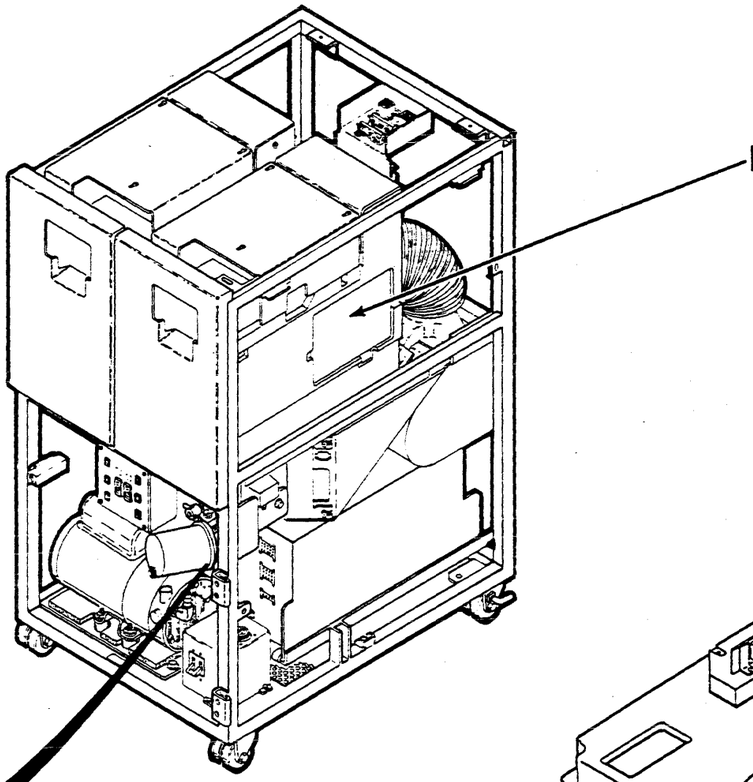

Tape Transport Unit

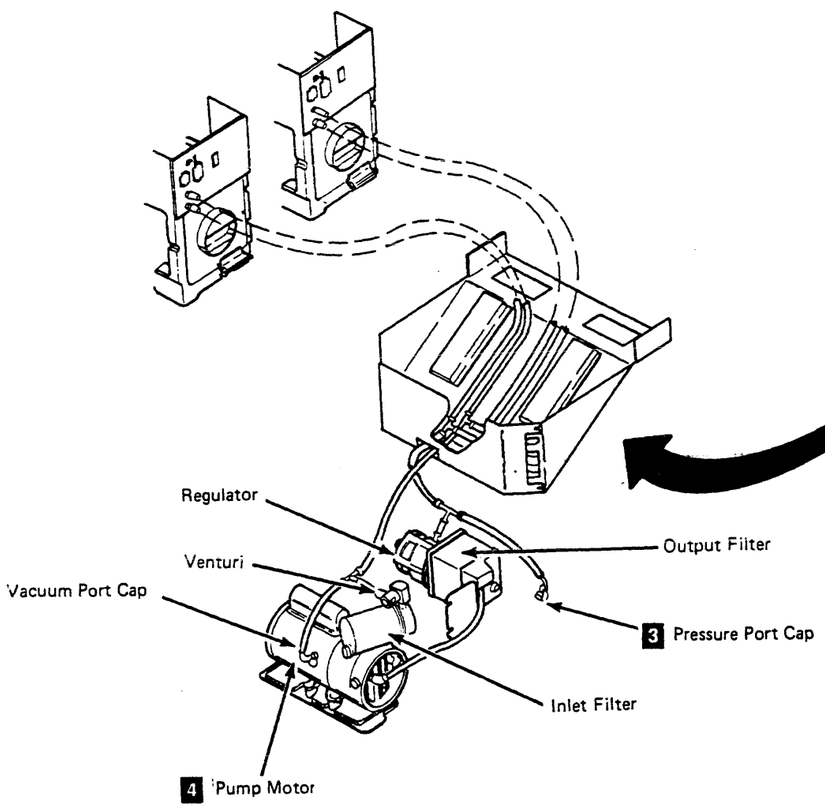

Pneumatics Supply Assembly

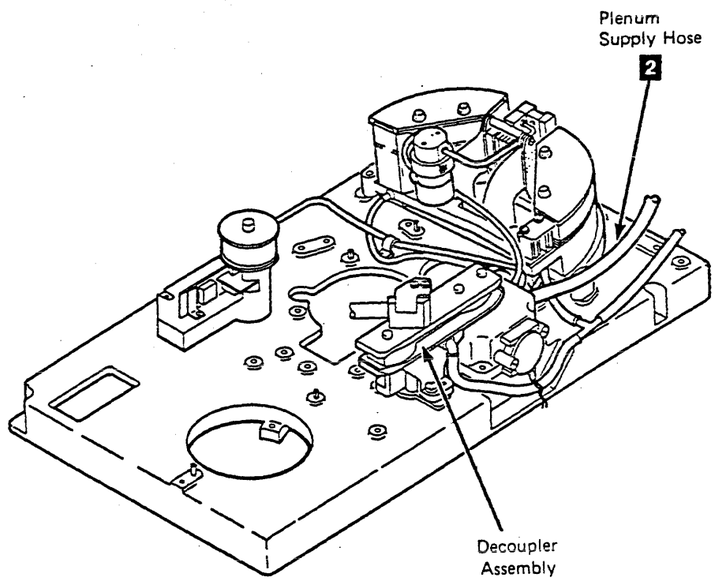

Tape Deck - Top View

Air Pressure Loss (Continued)

You were sent here after the preceding procedures showed a failure in the primary pneumatics system. This procedure will isolate the problem.

Failure in the Primary Pneumatics System

001
Is the pressure high?

YES NO

001
The pressure is low.

Is the vacuum high?

YES NO

002
Is the vacuum low?

YES NO

003
The vacuum is within tolerance.
Exchange the following FRUs. For the removal/replacement procedures see CARR-DR 1-1.

Note: If the pump motor (FRU030) or the regulator (FRU031) is exchanged, the output filter (FRU032) must also be exchanged.

FRU031 - Regulator
FRU032 - Output filter
FRU034 - Pressure hose assembly
FRU037 - Manifold-in pressure hose
FRU039 - Plenum supply hose

Go to "Exit Procedure" on this page.

004
Remove the inlet filter (FRU033) and canister from the pump motor. See CARR-DR 1-1 to find the removal page for FRU033.

Do not replace the canister at this time.

Set the tape transport unit ac power circuit breaker to ON (see LOC 1).

Refer to PNEU 5 and measure, but DO NOT adjust, the pressure.

Is the pressure within tolerance?

YES NO

A B C D

A B C D

005
Exchange the following FRUs. For the removal/replacement procedures see CARR-DR 1-1.

Note: If the pump motor (FRU030) or the regulator (FRU031) is exchanged, the output filter (FRU032) must also be exchanged.

FRU030 - Pump motor
FRU031 - Regulator
FRU032 - Output filter
FRU065 - Pump to output filter hose
FRU037 - Manifold-in pressure hose

Go to "Exit Procedure" on this page.

006
Exchange the following FRU. For the removal/replacement procedures see CARR-DR 1-1.

FRU033 - Inlet filter

Go to "Exit Procedure" on this page.

007
Exchange the following FRUs. For the removal/replacement procedures see CARR-DR 1-1.

Note: If the pump motor (FRU030) or the regulator (FRU031) is exchanged, the output filter (FRU032) must also be exchanged.

FRU030 - Pump motor
FRU031 - Regulator
FRU065 - Pump to output filter hose
FRU037 - Manifold-in pressure hose

Go to "Exit Procedure" on this page.

008
Exchange the following FRU. For the removal/replacement procedures see CARR-DR 1-1.

Note: If the pump motor (FRU030) or the regulator (FRU031) is exchanged, the output filter (FRU032) must also be exchanged.

FRU031 - Regulator

Go to "Exit Procedure" on this page.

Exit Procedure

1. Refer to PNEU 5 to measure the pressure and vacuum. Adjust if necessary.
2. Set the Online/Offline switch to Online on BOTH drives.
3. Install a scratch tape and run GMP.

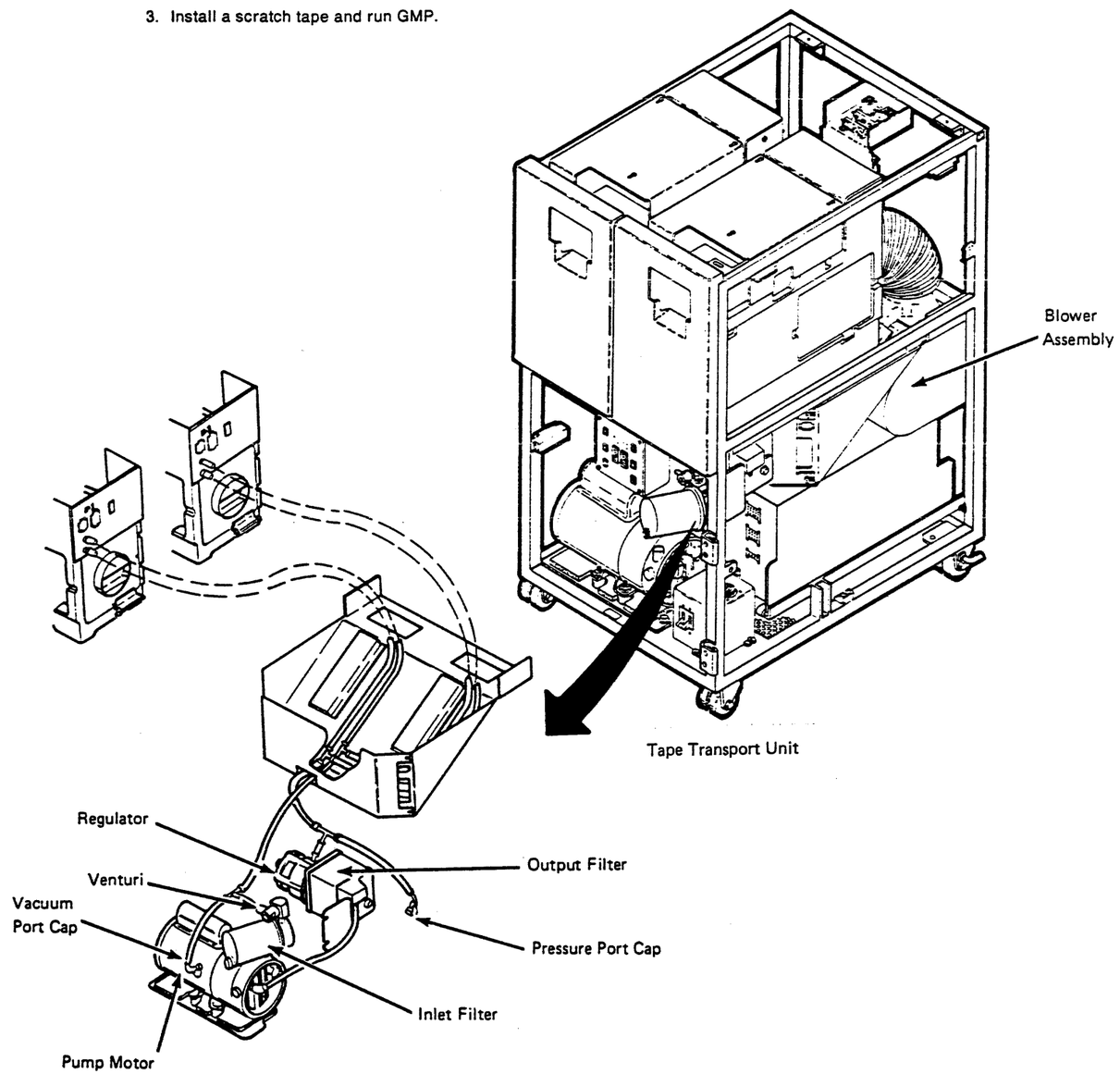

Pneumatics Problem on a Single Drive

You were sent here for further problem isolation, after the measurements taken on the primary pneumatics system were correct.

Pneumatics Problem on a Single Drive

001
Press the reset switch on the drive.

Does CHK 46 appear on the drive display?

YES NO

NO:
002
Exchange the following FRUs. For the removal/replacement procedures see CARR-DR 1-1.

FRU040 - Pressure sensor
FRU085 - Drive control card

Go to "Exit Procedure" on this page.

003
Remove the cover on pin side of the drive logic board 1, and jumper pin 02A-A1G6A02 (+ air pressure loss) to pin 02A-A1B2U08 (Ground).

Press the Reset switch (see LOC 1).

Did the CHK 46 disappear?

YES NO

NO:
004
Remove the jumper and exchange the following FRU. For removal/replacement procedures, see CARR-DR 1-1.

FRU085 - Drive control card

Go to "Exit Procedure" on this page.

A

YES:
A

005
Remove the jumper.

Pinch each hose that leaves the plenum 2, one at a time (except the plenum supply hose), and press the drive reset switch.

Did the CHK 46 reappear on the display after each hose was pinched and the drive reset?

YES NO

YES:
006
Exchange or attach the hose causing the failure.

Go to "Exit Procedure" on this page.

NO:
007
Exchange the following FRUs. For the removal-replacement procedures, see CARR-DR 1-1.

FRU040 - Pressure sensor
FRU041 - Plenum assembly
FRU039 - Plenum supply hose
FRU034 - Pressure hose assembly
FRU037 - Manifold-in pressure hose

Go to "Exit Procedure" on this page.

Exit Procedure

1. Refer to PNEU 5 to measure the pressure and vacuum. Adjust if necessary.
2. Set the Online/Offline switch to Online on BOTH drives.
3. Install a scratch tape and run GMP.

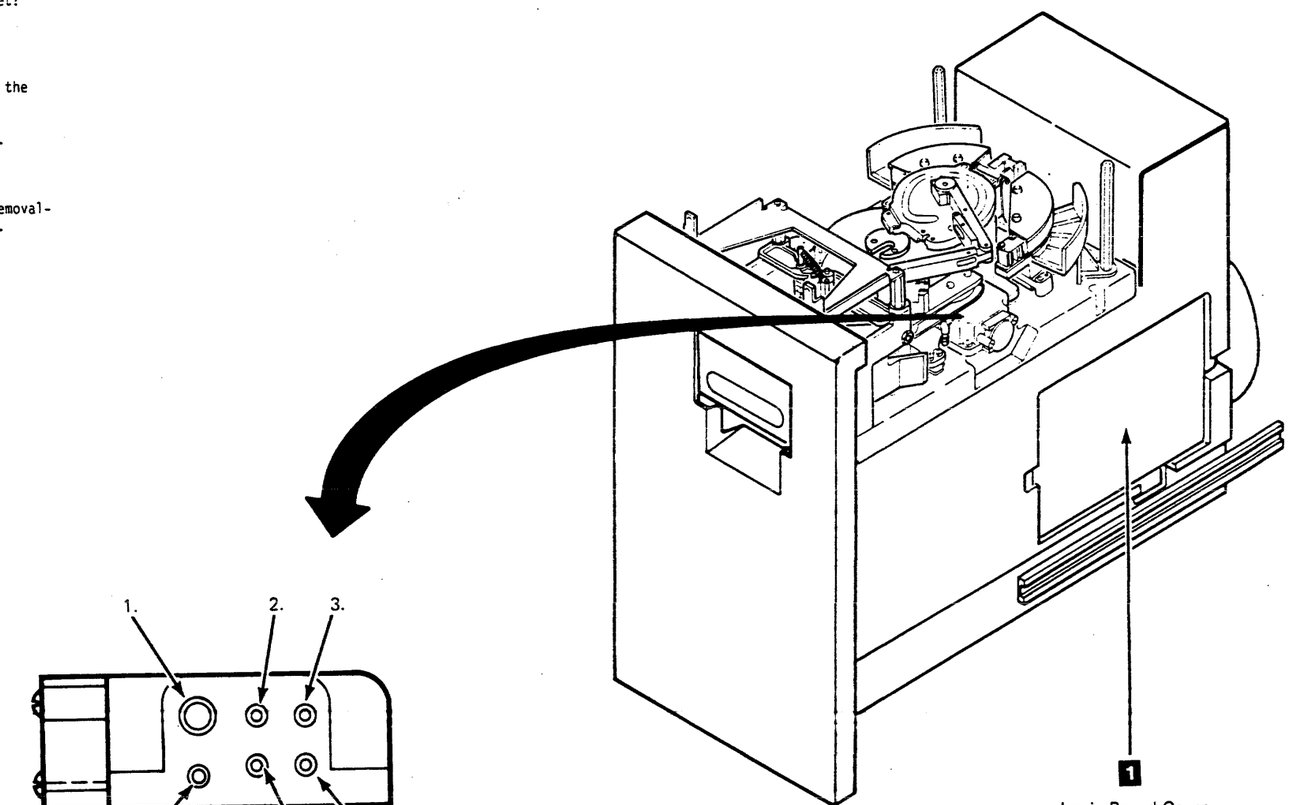

Logic Board Cover, Pin Side

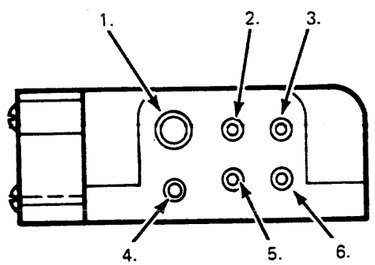

2 Plenum Hose Locations

1. Plenum Supply
2. Tape Lifter Solenoid
3. Decoupler Pressure
4. Right Guide Bearing
5. Transducer
6. Left Guide Bearing

Pneumatic Checkout Procedure

Introduction

Read/write and data check errors can be caused by vacuum missing at the tape cleaner assembly or at the decoupler assembly. Pneumatic pressure problems are indicated by CHK 46 (air pressure loss) on the operator panel, but there is no indication of a detached or clogged vacuum hose.

Vacuum Checks

See CARR-DR 2-3 for cover removal. Figure 2 shows the components that are on the top of the tape deck (some pressure hoses have been removed for clarity). Figure 1 shows the pneumatic components at the front of the tape transport unit.

Analysis Procedure

1. Set the drive Online/Offline switch to Offline (see LOC 1).
2. With power on the drive, detach the vacuum supply hose 1 from the vacuum distribution tee and sense for vacuum by covering the hose end with a finger.

```
001
Is there vacuum?

YES NO
 |  |
 |  002
 |  Reconnect the vacuum supply hose to the
 |  vacuum distribution tee.  Open the vacuum
 |  port cap 2 and sense for vacuum as before.
 |
 |  Is there vacuum?
 |
 |  YES NO
 |   |  |
 |   |  003
 |   |  Reseat or exchange the following FRU.
 |   |  See CARR-DR 1-1 for the removal and
 |   |  replacement procedures if necessary.
 |   |
 |   |    Note:  If the pump motor (FRU030) or
 |   |    the regulator (FRU031) is exchanged,
 |   |    the output filter (FRU032) must also
 |   |    be exchanged.
 |   |
 |   |    FRU030 - Pump motor
 |   |
 |   |  Close the vacuum port cap.
 |   |
 |   |  Go to "Exit Procedure" on this page.
 |   |
 |   |
A  B
```

```
A  B
 |
 |  004
 |  Reseat or exchange the following FRU.
 |  See CARR-DR 1-1 for the removal and
 |  replacement procedures if necessary.
 |
 |    FRU035 - Vacuum hose assembly
 |    FRU212 - Vacuum supply hose
 |    FRU038 - Manifold-in vacuum hose
 |
 |  Close the vacuum port cap.
 |
 |  Go to "Exit Procedure" on this page.
 |
005
Reseat or exchange the following FRUs.
See CARR-DR 1-1 for the removal and
replacement procedures if necessary.

  FRU043 - Decoupler vacuum hose
  FRU047 - Cleaner supply hose.
  FRU219 - Vacuum distribution tee

Reconnect the vacuum supply hose.

Go to "Exit Procedure" on this page.
```

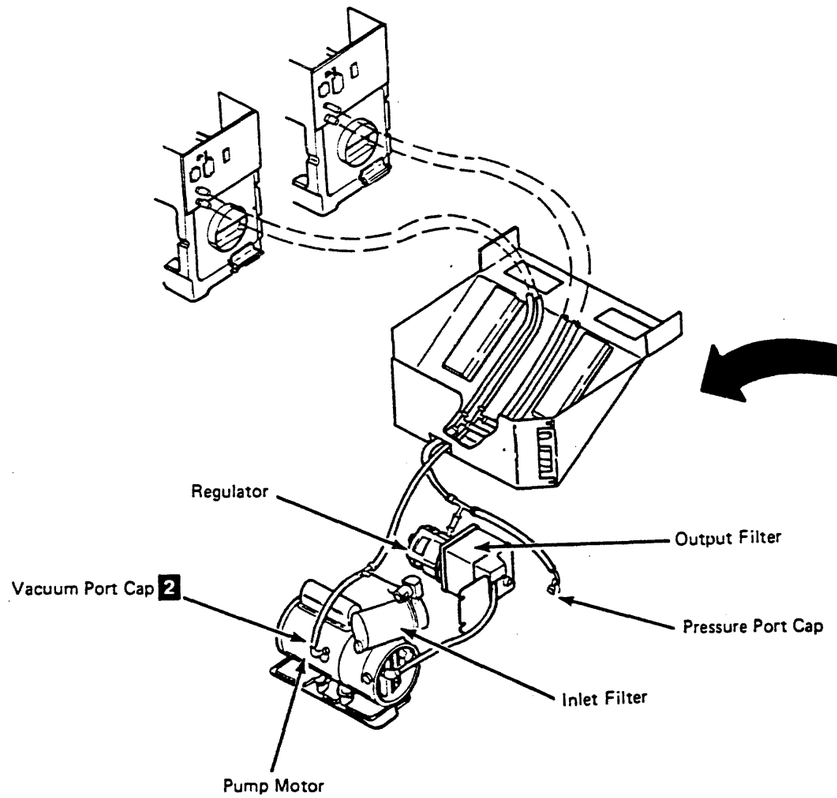

Figure1. Pneumatics Supply Assembly

Exit Procedure

1. See PNEU 5 to measure the pressure and vacuum. Adjust if necessary.
2. Set the Online/Offline switch to Online on BOTH drives.
3. Install a scratch tape and run GMP.

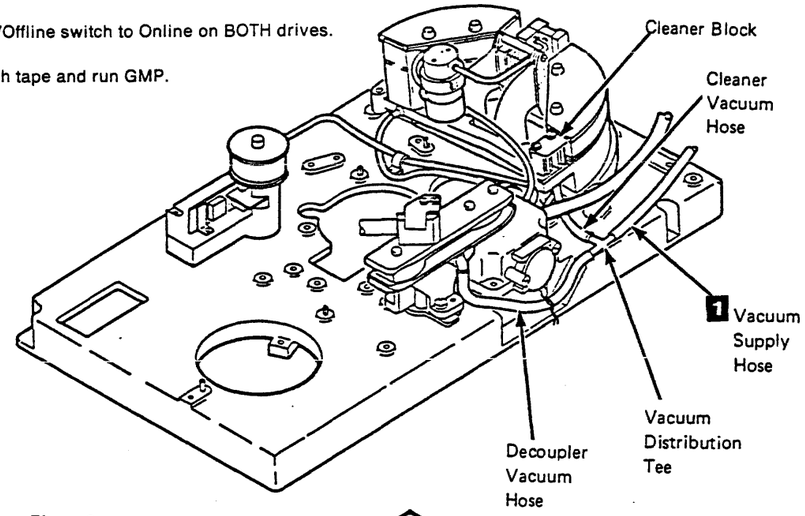

Figure 2. Tape Deck-Top View

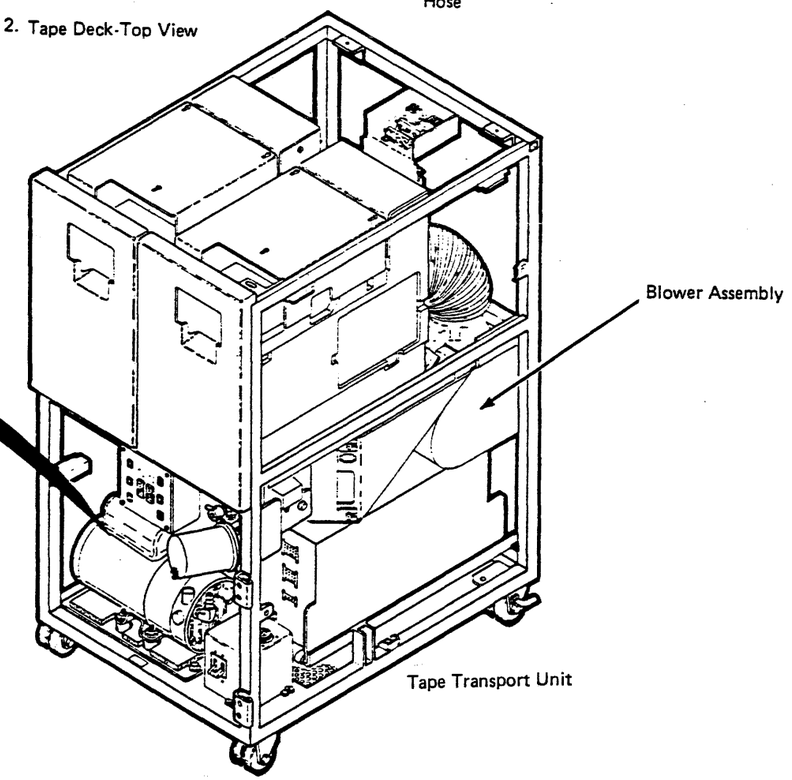

Contents

Message List For Pseudo Sense Builder 10

Error Report Procedure Actions 20

VMS Error Log Messages 100

STI Drive Requested Error Log (Format 7) 200

TA90 Extended Sense Information 201

STI Formatter Requested Error Log (Format 8) 205

Tape Transfer Errors (Format 5) 203

Mount/Dismount Entries 215

STI Informational and Media Logs (Format B) 210

VAXsimPLUS Messages 240

Message List For Pseudo Sense Builder

Message Number (Hex)	Message Description (Not Exact Text)	Action
01	Invalid Message Pointer	Call next level of support.
11	Microprocessor Failure From Diagnostics	Replace FRU 117.
12	Diagnostic completed and failed (from diagnostics)	None (internal use only).
13	Microcode error (from support diagnostics)	Call next level of support.
14	Diagnostic completed successfully (from diagnostics)	None (internal use only).
19	Microcode error (from diagnostics)	Call Next level of support.
22	Invalid application ID	Rekey your request.
23	Invalid application suffix	Rekey your request.
24	Invalid loop option	Rekey your request.
25	Invalid drive selection	Rekey your request.
28	Unit check due to command reject (ERA 27)	External program error. Call next level of support.
29	Byte 1 should be '80'x	Rekey your request.
2A	Byte 1 should be '00'x	Rekey your request.
2B	Data should be zero	Rekey your request.
2C	Byte 6 should be 'A0'x or '03'x	Rekey your request.
2D	Byte 0 is invalid	Rekey your request.
31	Diskette drive error	Try a new diskette. If the problem persists, replace the diskette drive.
32	Diagnostic aborted due to Channel 'B' interrupt	Terminate activities on Channel B.
34	Diagnostic aborted due to Channel 'A' interrupt	Terminate activities on Channel A.
36	All parameters are valid	For code debugging purpose only.
39	Cannot continue, MD attached	Detach the MD and restart.
42	Interface disconnect occurred	Re-IPL. If the problem persists call the next level of support.
43	Selective reset occurred	Re-IPL. If the problem persists call the next level of support.
System reset occurred	Re-IPL. If the problem persists call the next level of support.	
45	SDM received unrecognized command	Call the next level of support.
46	Unit check due to channel sequence error	Program error.
47	Unit check due to command sequence error	Program error.
48	Unit check due to device reserved to other	Issue a system reset.
49	Unit check due to a diagnostic state command reject	Program error. Call the next level of support.
4C	Unit check due to bus out parity	Check interface between the TA90 and the HSC.
4D	Unit check due to deferred unit check	Call the next level of support.
4E	Unit check due to device not ready	Call the next level of support.
4F	Unrecognized channel interrupt occurred	Call the next level of support.
50	Data transfer to channel truncated	Reissue the command.
51	Data transfer from channel truncated	Reissue the command.
52	Channel adapter error occurred during data transfer	Call the next level of support.
53	Unrecognized channel adapter interrupt during data transfer	Call the next level of support.
54	Channel adapter 'B' error	Replace channel adapter B.
58	Channel adapter 'A' error	Replace channel adapter A.
59	Device has already been assigned	Re-IML. If the problem persists, call the next level of support.
63	Unable to present channel status	Re-IML. If the problem persists, call the next level of support.

Error Recovery Procedures Actions List

This list provides reference information about the system recovery actions and operator actions that are unique to the TA90 Subsystem.

ERPA #	System Description	Definition of Error	System Recovery Action	Operator Action
45	Drive Assigned Elsewhere	The drive is not assigned to the channel path that issued the command.	Permanent error indicated. Error message generated.	Verify that the drive is mounted.
49	Bus-Out Parity Check	A bus-out parity error was detected on the command or parameter bytes. (Does not include bus-out parity during data transfer type commands.)	Permanent error indicated. Error message generated. Error Log report	Call for service.
39	Backward at BOT	The beginning of tape (BOT) was reached during a backward command.	Permanent error indicated. Error message generated.	
27	Command Reject	Command reject can occur for any of the following: • Invalid argument for a command. • Command sequence error. • A DSE command is not chained to an erase gap command. • An unidentified command.	Permanent error indicated. Console message generated.	May be a software problem. Rerun the job using another drive.
25 25	Write Data Check (deferred unit check) Write Data Check (postponed unit check)	• The data is contained in the buffer but has not been correctly written. • Error Recovery Procedures (ERP) has retried erase gaps and rewrites, but has been unable to successfully complete the write operation. • A permanent error was detected during a write data, IBG, or tape mark operation. Retries have not been successful. • A temporary error has been detected with mode set bit 7 equal to 1.	Permanent error indicated. Console message generated. Error Log report Increase permanent read/write SDR counter.	Call for service.
23	Read Data Check	A permanent read error or a temporary read error (mode set bit 7 = 1) has occurred.	Permanent error indicated. Console message generated. Error Log report Increase the permanent read/write SDR counter.	Call for service.

ERPA #	System Description	Definition of Error	System Recovery Action	Operator Action
2D	Data Security Erase Failure	The drive became not-ready after a DSE command was issued, or an error occurred while processing a DSE command.	Permanent error indicated. Error message generated. Error Log report	Verify that the drive is ready. Retry the job. Call for service.
21	Data Streaming Not Operational	After attempts to transfer data in streaming mode, the TCU has switched to "DC interlock" mode until system reset or demount.	Permanent error indicated. Error message generated. Error Log report.	Call for service.
38	Physical End-of-Tape	The physical end of the tape was encountered while processing a read or write type of command.	Permanent error indicated. Error message generated.	Notify the user of a possible program failure. If the problem remains, call for service.
2C	Permanent Equipment Check	Set either of two ways: 1. The tape control unit can't determine the correct recovery because of: a. Invalid error code b. Sense builder error c. Microprogram error 2. Error recovery was attempted and failed.	Permanent error indicated. Error message generated. Error Log report	Call for service.
28	Write ID Mark Check	The ID mark could not be written at BOT. The data remains in the buffer.	Permanent error indicated. Error message generated. Error Log report	Call for service.
35	Drive Equipment Check	The drive detected an error from which the ERPA was unable to recover or a CHK message is currently in the drive message display, and a load display command is issued (drive display busy).	Permanent error indicated. Console message generated. Error Log report	Call for service.
36	Drive Patch Load Failure	The tape control unit could not successfully load microprogram patches to the drive.	Permanent error indicated. Console message generated. Error Log report	Call for service.
30	File Protected	A write operation was attempted on a file protected tape.	Permanent error indicated. Error message generated.	Verify the file protection of the tape. If correct, cancel the job and call for service. If not correct, set to the proper status and rerun the job.

Error Description List (Continued)

ERPA #	System Description	Definition of Error	System Recovery Action	Operator Action
33	Load Failure	1. The cartridge has not loaded correctly in the drive. 2. The load operation could not complete properly due to a hardware failure in the drive.	Console message generated. Error Log report Reissue the command, if unsuccessful post 'permanent error.'	If a permanent error, call for service.
34	Manual Load Failure	The drive cannot maintain tape tension and control tape movement during an 'unload'command.	Console message generated. Error Log report Reissue the command, if unsuccessful post 'permanent error.'	If a permanent error, call for service.
3A	Drive Reset by Operator	The manual reset switch on the drive has been pressed and the drive is not ready.	Console intervention required message is generated to ready the drive. After the drive is ready, reissue the command.	A normal condition. Call for service only if the drive continues to go not ready for no apparent reason, or cannot be made ready.
43	Intervention Required	A Start I/O command was issued to a drive that does not have a volume properly mounted.	Console message generated. No Error Log report Retry the failing CCW.	Verify that the volume is mounted correctly. If the problem remains, call for service.

ERPA #	System Description	Definition of Error	System Recovery Action	Operator Action
	I/O Error	I/O Error caused by: 1. Sense failure. 2. Invalid ERPA code (less than 20 or greater than 4C).	Permanent error indicated. Console message generated. Error Log report	May be a firmware problem. Rerun the job using another drive. Call for service.
24	Load Display Check	A load display command was issued to a drive while the cartridge was being loaded.	Permanent error indicated. Console message generated. Error Log report	May be a software problem. Rerun the job using another drive. If the problem remains on a single drive, call for service.
2E	Not Capable	The density mark could not be read properly because of: 1. Void at tape beginning. 2. Timeout before the density separator was detected. 3. Density mark unreadable. The block ID read by the tape control unit is invalid. Bit 0 or bits 8-11 are nonzero.	Permanent error indicated. Error message generated. Error Log report	Call for service.
4B	No Patch Available	A tape control unit has sensed a model or microcode mismatch between itself and an attached drive.	Permanent error indicated. Error message generated. Error Log report	Call for service.
44	Locate Block Unsuccessful	The tape control unit cannot locate the block preceding the desired block.	Permanent error indicated. Error message generated.	Call for service.
46	Drive Offline	A command requiring drive activity was issued to a drive that is not online.	Permanent error indicated. Error message generated.	Verify the drive is powered on and is online. If the problem remains, call for service.
40	Overrun	A data overrun between the channel and the tape control unit buffer occurred while processing a large block that does not fit in the buffer.	Permanent error indicated. Console message generated. Error Log report	Call for service.
22	Path Equipment Check	Path equipment check can be caused by the following: A device interface error occurred. Buffer error between buffer and drive could not recover. No internal path is usable.	Permanent error indicated. Console message generated. Error Log report Increase the permanent read/write SDR counter.	Call for service.
4A	Error Recovery Failed	While trying to recover from a drive data handling failure, the tape control unit recovery procedure failed.	Permanent error indicated. Console message generated. Error Log report	Call for service.
	Sense Failure	A unit check was detected at the host system during a sense command. The sense data received is not considered valid, and is not printed in the console message.	Permanent error indicated. Console message generated. Error Log report	Determine if the problem relates to the TA90 Subsystem. If it only occurs on the TA90, call for service. If the problem occurs on other units, contact the field engineer (FE) responsible for the host system.

Error Recovery Procedures Action List

ERPA #	System Description	Definition of Error	System Recovery Action	Operator Action
47	Tape Control Unit Check One Error	The tape control unit had a severe error condition, reinitialized itself, and continued processing activities.	Permanent error indicated. Error message generated.	Call for service.
29	Demark Data Buffer Error (Data Buffer Error)	A buffer error (memory or control) has been detected, and part of the buffer is flagged as unusable.	Permanent error indicated. Error message generated. Error Log report	The TA90 subsystem will operate with a partial buffer. Call and inform the FE of the degradation.
32	Tape Tension Lost	The tape control unit has detected a loss of tape tension on an attached drive.	Permanent error indicated. Error message generated. Error Log report	Call for service.
37	Tape Length Check	The tape length in the cartridge is too short. The error could occur when the leader block was replaced (the length of tape ahead of the BOT has been trimmed).	Permanent error indicated. Error message generated.	If the problem is on more than one volume, call for service.
3B	Volume Unloaded By Operator	Tape motion has taken place on a drive, the Rew/Unl switch has been operated, and another motion command has been issued to the drive.	Permanent error indicated. Console message generated. Error Log report	If the problem remains, call for service.
31	Tape Void	No patterns or data were found on the tape during a read operation.	Permanent error indicated. Console message generated. Error Log report	Call for service.

VMS Error Log Messages

Tape Report Description

The following section describes the format and content of the TA90 tape reports produced by ERF (Analyze/Error).

This section gives samples of ERF (Analyze/ErrorLog) output messages from the VMS Error Log. As will be seen in the following examples, the Error Log would be more appropriately named the error/event log. The VAX/VMS system automatically writes messages to the latest version of an error log file name SYS$ERRORLOG:ERRORLOG.SYS as the following events occur:

- Errors — Device errors, device timeouts, machine checks, bus errors, memory errors (hard or soft error correcting code (ECC) errors), asynchronous write errors, undefined interrupts, and bugchecks.
- Volume Changes — Volume mounts and dismounts.
- System events — Cold start-ups, warm start-ups, system failure (crash) start-ups, messages from the Send Message to Error Logger ($SNDERR) system service, or time stamps.

TA90 Subsystem Messages

This section provides information on TA90-dependent error log message types. Examples will be given for several error log message types:

- Tape data transfer errors (Format 5)
- STI drive requested error log (Format 7)
- STI formatter requested error log (Format 8)
- STI informational and media logs ((Format B).

The STI drive requested error messages indicate that the TCU had sense data available describing an error event. The message will contain sense data format 20. Each time one of the format 7 messages appears, it will be followed by a tape data transfer error message (format 5) with the same command reference number.

The drive error packet (format 7) can be used to analyze the error event. The transfer packet indicates either successful recovery, or that retries failed to recover from the error.

In addition, there are informational messages (STI format B) that are media quality reports for use by VMS backup, and statistical counters from the subsystem. The media quality reports are event code 0068, and contain format 19 (forced logging) sense data. The statistical entries are event code 0016 and contain format 21 (statistics) sense data (without data compaction) or format 30 (statistics) sense data (with data compaction).

Statistical entries are put in the error log when a statistical counter in the TCU overflows or when a tape is unloaded. These statistics provide information about the use and the error rate of this particular tape.

STI Drive Requested Error Log (Format 7)

Field Definitions

DATE/TIME 1

The date and time of the error event.

I/O SUB-SYSTEM, UNIT 2 is the subsystem unit number, including the HSC node. In this example, the HSC node is 'T'.

MSLG$L_CMD_REF 3 is the command reference number. All messages in the error log with the same command reference number refer to the same event.

MSLG$B_FORMAT 4 is the STI message format indicating a drive error.

MSLG$W_EVENT 5 is the event code.

MSLG$Q_UNIT_ID 6 is the MSCP device type identifier.

```
 V A X / V M S        SYSTEM ERROR REPORT      COMPILED  6-JUN-1988 15:26
                                                                PAGE   3.

*******************************ENTRY      10. ***************************
ERROR SEQUENCE 1129                          LOGGED ON:      SID 06FF01DD
DATE/TIME  1-JUL-1988 15:27:54.72 1                        SYS_TYPE 010009F8

ERL$LOGMESSAGE ENTRY  KA87    REV# 127.  LEFT CPU
                      SCS NODE:  WACHU3, CPU # 1.

I/O SUB-SYSTEM, UNIT _T$MUA1:  2

      MESSAGE TYPE        0002
                                        TAPE MSCP MESSAGE

      MSLG$L_CMD_REF  B86C0008 3
      MSLG$W_UNIT         0001
                                        UNIT #1.

      MSLG$W_SEQ_NUM      0007
                                        SEQUENCE #7.

      MSLG$B_FORMAT         07 4
                                        STI DRIVE ERROR 4

      MSLG$B_FLAGS          00
      MSLG$W_EVENT        FF6B 5
                                        DRIVE ERROR
                                        TAPE DRIVE REQSTED ERROR LOG 5

      MSLG$Q_CNT_ID   0000FB04
                      01200000
                                        UNIQUE IDENTIFIER, 00000000FB04 (X)
                                        MASS STORAGE CONTROLLER
                                        HSC70

      MSLG$B_CNT_SVR        27
                                        CONTROLLER SOFTWARE VERSION #39.

      MSLG$B_CNT_HVR        00
                                        CONTROLLER HARDWARE REVISION #0.

      MSLG$W_MULT_UNT     0061
      MSLG$Q_UNIT_ID  71805701
                      03070700
                                        UNIQUE IDENTIFIER, 070071805701 (X)
                                        TAPE CLASS DEVICE 6
                                        TA90

      MSLG$B_UNIT_SVR       00
                                        UNIT SOFTWARE VERSION #0.

      MSLG$B_UNIT_HVR       00
                                        UNIT HARDWARE REVISION #0.

      MSLG$L_GAP_CNT  00000DC7
                                        GAP COUNT = 3527.

      MSLG$B_FMTR_SVR       08
                                        FORMATTER SOFTWARE VERSION #8.

      MSLG$B_FMTR_HVR       01
                                        FORMATTER HARDWARE REVISION #1.

GET EXTENDED DRIVE STATUS (GEDS TEXT FIELD)

      SPEED                 4E
                                        78. IPS TAPE DRIVE

      DENSITY               01
                                        TA90 NORMAL DENSITY

      UNIT                0001
                                        MSCP UNIT NUMBER = 1.
```

TA90 Extended Sense Information

TA90 extended sense information **7** is information that comes from the TCU. The sense bytes are described in SENSE, VOL A02 of the Maintenance Guide.

Field Definitions

SENSE BYTE 3 **8** contains the Error Recovery Procedure Action (ERPA) list (see MSG-20). The ERPA code describes the action that the controlling computer should take to recover from an error within the subsystem. In this example, the code hexadecimal 3A indicates that the Drive Reset switch was operated, and the drive is not ready.

SENSE BYTE 7 **9** identifies the format of sense bytes 8 through 31. In this case, byte 7 contains hexadecimal 20, and the format represents error sense data (format 20).

SENSE BYTE 20 **10** identifies the command active or last given at the time that a drive error code 1 occurred.

SENSE BYTE 21 **11** contains the first error detected since the last device Sense command. For a specific error code description, see the FSI section.

SENSE BYTES 24 - 31 **12** contain information about the tape control unit/tape transport unit features, microcode revisions, serial numbers and drive characteristics.

```
V A X / V M S       SYSTEM ERROR REPORT      COMPILED  6-JUN-1988 15:26
                                                              PAGE   4.

      GAPCNT          00000000
                                        GAP COUNT = 0.

TA90 EXTENDED SENSE INFORMATION 7

      SENSE BYTE 0          40
                                        INTERVENTION REQUIRED
      SENSE BYTE 1          44
                                        WRITE STATUS
                                        DEVICE ONLINE
      SENSE BYTE 2          40
                                        CONTROL UNIT ID 0.
                                        CHANNEL ASSIGNMENT 0.
                                        CHANNEL ADAPTER B
      SENSE BYTE 3          3A 8
                                        DRIVE RESET BY OPERATOR
      SENSE BYTE 4-6     000DC6
                                        BLOCK ID = 3526.
      SENSE BYTE 7          20 9
                                        ERROR SENSE DATA
      SENSE BYTE 8          6C
                                        MANUAL ACTION REQ/EQUIPMENT CHECK
      SENSE BYTE 9          0C
                                        1ST FSC MODIFIER
      SENSE BYTE 10-11    8E06
                                        1ST FLT SYMPTOM CODE
      SENSE BYTE 12-13    0000
                                        2ND FLT SYMPTOM CODE
      SENSE BYTE 14-15    0000
                                        3RD FLT SYMPTOM CODE
      SENSE BYTE 16-17    0000
                                        CU HW ERROR CODE
      SENSE BYTE 18         06
                                        DRIVE FLAG 1
      SENSE BYTE 19         02
                                        DRIVE MODE B22
      SENSE BYTE 20         0A 10
                                        DRIVE COMMAND CODE 1
      SENSE BYTE 21         75 11
                                        DRIVE ERROR CODE 1
      SENSE BYTE 22         00
                                        DRIVE COMMAND CODE 2
      SENSE BYTE 23         00
                                        DRIVE ERROR CODE 2
      SENSE BYTE 24         C6 12
                                        3 MEGABYTE STREAMING
                                        CHANNEL ADAPTER B
                                        CHANNEL ADAPTER A
      SENSE BYTE 25         00
                                        DUAL CONTROL UNIT FEATURE
      SENSE BYTE 26         05
                                        CU UCODE EC LEVEL = 5.
                                        CU UCODE COMPOSITE LEVEL = 0.
      SENSE BYTE 27-29  718057
                                        CONTROL UNIT S/N = 98391.
                                        MODEL BDX DRIVES ATTACHED
      SENSE BYTE 30         11
```

Tape Transfer Error (Format 5)

Field Definitions

COMMAND REFERENCE NUMBER 1. Note that this number is the same as the preceding example, indicating that the drive and command error message refer to the same error event.

TAPE ERROR 2 indicates that this is a Format 5, tape transfer error.

FRMTR RETRY SEQ EXHAUSTED 3 indicates that the drive was unable to recover from the error, and the data transfer operation did not succeed. This is a fatal error.

```
 V A X / V M S        SYSTEM ERROR REPORT      COMPILED  6-JUN-1988 15:26
                                                                PAGE   7.

*******ENTRY 11., ERROR SEQUENCE 1131.  LOGGED ON SIDE 06FF01DD

ERL$LOGMESSAGE ENTRY  KA87    REV# 127.  LEFT CPU
                      SCS NODE:  WACHU3, CPU # 1.

I/O SUB-SYSTEM, UNIT _TSMUA1:

      MESSAGE TYPE        0002
                                        TAPE MSCP MESSAGE

      MSLG$L_CMD_REF  B86C0008 1
      MSLG$W_UNIT         0001
                                        UNIT #1.

      MSLG$W_SEQ_NUM      0009
                                        SEQUENCE #9.

      MSLG$B_FORMAT         05
                                        TAPE ERROR 2

      MSLG$B_FLAGS          00
      MSLG$W_EVENT        FF68
                                        DATA ERROR
                                        FRMTR RETRY SEQ EXHAUSTED 3

      MSLG$Q_CNT_ID   0000FB04
                      01200000
                                        UNIQUE IDENTIFIER, 00000000FB04 (X)
                                        MASS STORAGE CONTROLLER
                                        HSC70

      MSLG$B_CNT_SVR        27
                                        CONTROLLER SOFTWARE VERSION #39.

      MSLG$B_CNT_HVR        00
                                        CONTROLLER HARDWARE REVISION #0.

      MSLG$W_MULT_UNT     0061
      MSLG$Q_UNIT_ID  71805701
                      03070700
                                        UNIQUE IDENTIFIER, 070071805701 (X)
                                        TAPE CLASS DEVICE
                                        TA90

      MSLG$B_UNIT_SVR       00
                                        UNIT SOFTWARE VERSION #0.

      MSLG$B_UNIT_HVR       00
                                        UNIT HARDWARE REVISION #0.

      MSLG$B_LEVEL          FF
      MSLG$B_RETRY          FF
      MSLG$L_GAP_CNT  00000DC7
                                        GAP COUNT = 3527.

      MSLG$B_FMTR_SVR       08
                                        FORMATTER SOFTWARE VERSION #8.

      MSLG$B_FMTR_HVR       01
                                        FORMATTER HARDWARE REVISION #1.
```

STI Formatter Requested Error Log (Format 8)

Field Definitions

COMMAND REFERENCE NUMBER **1** in this case, is the same number as the preceding drive requested error log message; therefore, it refers to the same error event.

FORMATTER UNAVAILABLE/OFFLINE **2** indicates that the STI-FIPS adapter has crashed or has gone offline.

DRIVE DETECTED ERROR **3** drive 0 position lost. Note that this is STI drive 0 on this adapter. The STI drive numbers map to the unit numbers as follows:

TCU0

L Adapter

STI Drive	Unit #
0	base addrs +0
1	base addrs +2
2	base addrs +4
3	base addrs +8

R Adapter

STI Drive	Unit #
0	base addrs +1
1	base addrs +3
2	base addrs +5
3	base addrs +7

TCU1

L Adapter

STI Drive	Unit #
0	base addrs +8
1	base addrs +10
2	base addrs +12
3	base addrs +14

R Adapter

STI Drive	Unit #
0	base addrs +9
1	base addrs +11
2	base addrs +13
3	base addrs +15

Since this is unit 1, the formatter is the "R" formatter of TCU0 and the base address of the subsystem is 0.

```
V A X / V M S       SYSTEM ERROR REPORT      COMPILED  6-JUN-1988 15:26
                                                        PAGE   5.

                                        PHYSICAL DRIVE ADDRESS = 1.
                                        LG-ORDER LOGICAL DRIVE ADDR = 1.

    SENSE BYTE 31          00

                                        DATA BYTE COUNT = 0. KB
*******ENTRY 11., ERROR SEQUENCE 1130.  LOGGED ON SIDE 06FF01DD

ERLSLOGMESSAGE ENTRY  KA87    REV# 127.  LEFT CPU
                      SCS NODE:  WACHU3, CPU # 1.

I/O SUB-SYSTEM, UNIT _T$MUA1:

     MESSAGE TYPE        0002

                                        TAPE MSCP MESSAGE

     MSLGSL_CMD_REF  886C0008 1
     MSLGSW_UNIT         0001

                                        UNIT #1.

     MSLGSW_SEQ_NUM      0008

                                        SEQUENCE #8.

     MSLGSB_FORMAT         06

                                        STI COMMUNICATION OR CMD FAILURE

     MSLGSB_FLAGS          00
     MSLGSW_EVENT        00E8

                                        DRIVE ERROR
                                        DRIVE DETECTED ERROR

     MSLGSQ_CNT_ID   0000FB04
                     01200000

                                        UNIQUE IDENTIFIER, 00000000FB04 (X)
                                        MASS STORAGE CONTROLLER
                                        HSC70

     MSLGSB_CNT_SVR        27

                                        CONTROLLER SOFTWARE VERSION #39.

     MSLGSB_CNT_HVR        00

                                        CONTROLLER HARDWARE REVISION #0.

     MSLGSW_MULT_UNT     0061
     MSLGSQ_UNIT_ID  71805701
                     03070700

                                        UNIQUE IDENTIFIER, 070071805701 (X)
                                        TAPE CLASS DEVICE
                                        TA90

     MSLGSB_UNIT_SVR       00

                                        UNIT SOFTWARE VERSION #0.

     MSLGSB_UNIT_HVR       00

                                        UNIT HARDWARE REVISION #0.

     MSLGSL_GAP_CNT  0006DDC7

                                        GAP COUNT = 3527.

     MSLGSB_FMTR_SVR       08

                                        FORMATTER SOFTWARE VERSION #8.

     MSLGSB_FMTR_HVR       01

                                        FORMATTER HARDWARE REVISION #1.

UNSUCCESSFUL RESPONSE INFORMATION

     SUMMOD                0A

                                        PORT A/B ENABLED
                                        FORMATTER UNAVAILABLE/OFFLINE 2
                                        DRIVE 0 ATTENTION
```

```
V A X / V M S       SYSTEM ERROR REPORT      COMPILED  6-JUN-1988 15:26
                                                        PAGE   6.

     SUMERR              00
     SUMMD2              05
                                        RETRIED TRANSFER
                                        FAILED
                                        PORT A ACTIVE
     CONBYT              00
     DR0MOD              08
                                        DRIVE ONLINE STATE (TO FRMTR)
     DR0ERR              20
                                        POSITION LOST 3
     DR1MOD              28
                                        DRIVE ONLINE STATE (TO FRMTR)
                                        BOT
     DR1ERR              00
     DR2MOD              28
                                        DRIVE ONLINE STATE (TO FRMTR)
                                        BOT
     DR2ERR              00
     DR3MOD              28
                                        DRIVE ONLINE STATE (TO FRMTR)
                                        BOT
     DR3ERR              00
```

STI Informational and Media Logs (Format B)

STI Format B contains informational messages that are media quality reports for use by VMS backup and statistical entries containing sense data.

If sense byte 7 contains 21 (hexadecimal) the format represents operating condition data (without data compaction). If sense byte 7 contains 30 (hexadecimal) the format represents operating condition data (with data compaction).

```
*******************************ENTRY   67714. *******************************
ERROR SEQUENCE 7412.                        LOGGED ON:      SID 0A000005
DATE/TIME 24-OCT-1989 00:43:17.64                       SYS_TYPE 02410201

ERL$LOGMESSAGE ENTRY  KA62A   CPU REV# 6.   FW REV# 4.1
                      SCS NODE:  STA284, XMI NODE # 1.

I/O SUB-SYSTEM, UNIT _HSC002$MUA3:

      MESSAGE TYPE        0002
                                    TAPE MSCP MESSAGE

      MSLG$L_CMD_REF  00000000
      MSLG$W_UNIT         0003
                                    UNIT #3.

      MSLG$W_SEQ_NUM      0086
                                    SEQUENCE #182.

      MSLG$B_FORMAT         0B
                                    SENSE DATA LOG

      MSLG$B_FLAGS          82
                                    NON-ERROR/INFORMATIONAL EVENT
                                    OPERATION SUCCESSFUL

      MSLG$W_EVENT        0016
                                    INFORMATIONAL LOG
                                    STATISTICS

      MSLG$Q_CNT_ID   92405502
                      01200000
                                    UNIQUE IDENTIFIER, 000092405502 (X)
                                    MASS STORAGE CONTROLLER
                                    HSC70

      MSLG$B_CNT_SVR        27
                                    CONTROLLER SOFTWARE VERSION #39.

      MSLG$B_CNT_HVR        00
                                    CONTROLLER HARDWARE REVISION #0.

      MSLG$W_MULT_UNT     0093
      MSLG$Q_UNIT_ID  00000000
                      00000000
                                    UNIQUE IDENTIFIER, 000000000000 (X)
                                    CLASS = 0.
                                    MODEL = 0.

      MSLG$B_UNIT_SVR       00
                                    UNIT SOFTWARE VERSION #0.

      MSLG$B_UNIT_HVR       00
                                    UNIT HARDWARE REVISION #0.

TA90 EXTENDED SENSE INFORMATION

      SENSE BYTE 0          40
                                    INTERVENTION REQUIRED

      SENSE BYTE 1          48
                                    BOT
                                    DEVICE ONLINE

      SENSE BYTE 2          44
                                    MORE CARTRIDGES TO PROCESS
                                    CONTROL UNIT ID 0.
                                    CHANNEL ASSIGNMENT 0.
                                    CHANNEL ADAPTER B

      SENSE BYTE 3          28
                                    UNLOAD STATUS PRESENT

      SENSE BYTE 4-6    000000
                                    BLOCK ID = 0.

      SENSE BYTE 7          21
                                    BUFFERED LOG DATA

      SENSE BYTE 8          00
                                    READ FWD DATA CHECKS = 0.

      SENSE BYTE 9          00
                                    RD BCKWD DATA CHECKS = 0.

      SENSE BYTE 10         00
                                    WRITE DATA CHECKS = 0.

      SENSE BYTE 11         00
                                    READ BLOCKS CORRECTED = 0.

      SENSE BYTE 12         0B
                                    WRITE BLOCKS CORRECTED = 11.

      SENSE BYTE 13         00
                                    CU EQUIPMENT CHECKS = 0.

      SENSE BYTE 14-15    0001
                                    READ BYTES PROCESSED = 4. KB

      SENSE BYTE 16-17    DEDB
                                    WRITE BYTES PROCESSED = 228204 KB

      SENSE BYTE 18         00
                                    READ BLOCKS PROCESSED <11:04> = 00 (X)
                                    _READ BLOCKS PROCESSED = 0.

      SENSE BYTE 19         0E
                                    WRITE BLOCKS PROCESSED <11:04> = 0E (X)
                                    _WRITE BLOCKS PROCESSED = 3600.

      SENSE BYTE 20         00
                                    WRT TRANSIENT CONDITIONS = 0

      SENSE BYTE 21         00
                                    RD TRANSIENT CONDITIONS = 0.      (X)

      SENSE BYTE 22         00
                                    CRITERIA WRT DATA CHECKS = 0.      (X)

      SENSE BYTE 23         00
                                    CRITERIA RD DATA CHECKS = 0.

      SENSE BYTE 24         00
                                    ERASE GAP COUNT = 0.

      SENSE BYTE 25         01
                                    DRIVE DETECTED ERRORS = 1.        (X)

      SENSE BYTE 26         01
                                    WRITE BLOCKS PROCESSED <03:00>  = 1 (X)
                                    READ BLOCKS PROCESSED <03:00>  = 1 (X)

      SENSE BYTE 27-29  301201
                                    _CONTROL UNIT S/N = 00001201.
                                    MODEL B22 DRIVES ATTACHED

      SENSE BYTE 30         00
                                    RD RECOVERY RETRY CNT = 0.

      SENSE BYTE 31         33
                                    PHYSICAL DRIVE ADDRESS = 3.
                                    LO-ORDER LOGICAL DRIVE ADDR = 3.
```

```
V A X / V M S       SYSTEM ERROR REPORT      COMPILED 27-OCT-1989 08:15
                                                        PAGE   1.

********************** ENTRY      6. LOGGED ON SIDE 06FF01DD

ERLSLOGMESSAGE ENTRY  KA865   REV# 2.  SERIAL# 1041.  MFG PLANT 7.
                      SCS NODE:  WACHU3,  CPU # 1.
I/O SUB-SYSTEM, UNIT _MSCP09$MUA11:

     MESSAGE TYPE        0002
                                  TAPE MSCP MESSAGE

     MSLGSL_CMD_REF  00000000
     MSLGSW_UNIT         000B
                                  UNIT #11.

     MSLGSW_SEQ_NUM      0CF7
                                  SEQUENCE #3319.

     MSLGSB_FORMAT         0B
                                  SENSE DATA LOG

     MSLGSB_FLAGS          82
                                  NON-ERROR/INFORMATIONAL EVENT
                                  OPERATIONAL SUCCESSFUL

     MSLGSW_EVENT        0016
                                  INFORMATIONAL LOG
                                  STATISTICS

     MSLGSQ_CNT_ID   0000F609
                     01210000
                                  UNIQUE IDENTIFIER, 00000000F609 (X)
                                  MASS STORAGE CONTROLLER
                                  HSC40

     MSLGSB_CNT_ID         27
                                  CONTROLLER SOFTWARE VERSION #39.

     MSLGSB_CNT_HVR        00
                                  CONTROLLER HARDWARE REVISION #0.

     MSLGSW_MULT_UNT     0042
                                  UNIT SOFTWARE VERSION #0.

     MSLGSQ_UNIT_ID  30099201
                     03070700
                                  UNIQUE IDENTIFIER, 070030099201 (X)
                                  TAPE CLASS DEVICE
                                  TA90

     MSLGSB_UNIT_SVR       00
                                  UNIT SOFTWARE VERSION #0.

     MSLGSB_UNIT_HVR       00
                                  UNIT HARDWARE REVISION #0.

TA90 EXTENDED SENSE INFORMATION

     SENSE BYTE 0          40

     SENSE BYTE 1          48
                                  INTERVENTION REQUIRED

                                  BOT
                                  DEVICE ONLINE

     SENSE BYTE 2          40
                                  CONTROL UNIT ID 0.
                                  CHANNEL ASSIGNMENT 0.
                                  CHANNEL ADAPTER B.

     SENSE BYTE 3          52
                                  UNLOAD STATUS PRESENT
```

```
V A X / V M S       SYSTEM ERROR REPORT      COMPILED 27-OCT-1989 08:15
                                                        PAGE   2.

     SENSE BYTE 4-6    000000
                                  BLOCK ID = 0.

     SENSE BYTE 7          30
                                  SENSE DATA LOG

     SENSE BYTE 8          00
                                  READ FWD DATA CHECKS = 0.

     SENSE BYTE 9          00
                                  WRITE DATA CHECKS = 0.

     SENSE BYTE 10         00
                                  READ BCKWD DATA CHECKS = 0.

     SENSE BYTE 11         00
                                  RESERVED

     SENSE BYTE 12         00
                                  READ CRITERIA DATA CHECKS = 0.

     SENSE BYTE 13         00
                                  WRITE CRITERIA DATA CHECKS = 0.

     SENSE BYTE 14         00
                                  READ RECOVERY RETRIES = 0.

     SENSE BYTE 15         00
                                  WRITE RECOVERY ERASE GAPS = 0.

     SENSE BYTE 16         00
                            READ TRANSIENT CONDITIONS = 0
     SENSE BYTE 17         00
                           WRITE TRANSIENT CONDITIONS = 0
     SENSE BYTE 18         00
                                  READ BLOCKS CORRECTED = 0.

     SENSE BYTE 19         00
                                  WRITE BLOCKS CORRECTED = 0.

     SENSE BYTE 20-21    0000
                                  RESERVED

     SENSE BYTE 22         00
                                  READ DATA REQUEST TIMEOUTS = 0.

     SENSE BYTE 23         00
                                  WRITE DATA REQUEST TIMEOUTS = 0.

     SENSE BYTE 24         00
                                  CHANNEL TRANSFER EQUIP CHKS = 0.

     SENSE BYTE 25         01
                                  DRIVE DETECTED ERRORS = 0.

     SENSE BYTE 26         00
                                  RESERVED

     SENSE BYTE 27-29  30G992
                                  CONTROL UNIT S/N = 2450.
                                  MODEL B22 DRIVES ATTACHED.

     SENSE BYTE 30         00
                                  DRIVE COMMAND CODE 1 = 0.

     SENSE BYTE 31         00
                                  RESERVED
```

```
V A X / V M S       SYSTEM ERROR REPORT      COMPILED 27-OCT-1989 08:15
                                                        PAGE   3.

     SENSE BYTE 32-34  000001
                                  CHANNEL READ BYTES PROC (X4K) = 4 K

     SENSE BYTE 35-37  012C83
                                  CHANNEL WRITE BYTES PROC (X4K)=315109 K

     SENSE BYTE 38-40  000001
                                  READ BYTES PROCESSED (X4K) = 4 K

     SENSE BYTE 41-43  006670
                                  WRITE BYTES PROCESSED (X4K) = 196548 K

     SENSE BYTE 44-46  000003
            CHANNEL READ BLOCKS PROC = 3
     SENSE BYTE 47-49  000667
            CHANNEL WRITE BLOCKS PROC = 1.639 K
     SENSE BYTE 50-52  000001
            READ BLOCKS PROC = 1
     SENSE BYTE 53-55  000335
            WRITE BLOCKS PROC = .821 K
```

Mount/Dismount Entries

Field Definitions

DATE/TIME 1 is the date and time of the entry.

UNIT_T$MUA7 2 is the unit number, including HSC node name. In this example, the HSC node name is "T".

VOLUME LABEL "D7" 3 is the tape label name.

QIO OPERATIONS 4 is the count of QIO's and errors for this tape volume.

```
 V A X / V M S        SYSTEM ERROR REPORT      COMPILED  6-JUN-1988 15:26
                                                                PAGE   2.

      1. QIO OPERATIONS THIS VOLUME, 0. ERRORS THIS VOLUME
*******************************ENTRY      20. ***************************
ERROR SEQUENCE 1143                          LOGGED ON:      SID 06FF01DD
DATE/TIME  1-JUL-1988 15:43:34.54 1                        SYS_TYPE 010009F8

MOUNT VOLUME  KA87    REV# 127.  LEFT CPU
              SCS NODE:  WACHU3, CPU # 1.
                   2
      UNIT _T$MUA7:, VOLUME LABEL "D7" 3

      59. QIO OPERATIONS THIS VOLUME, 0. ERRORS THIS VOLUME
*******************************ENTRY       21. ***************************
ERROR SEQUENCE 1144                          LOGGED ON:      SID 06FF01DD
DATE/TIME  1-JUL-1988 15:44:07.08 1                        SYS_TYPE 010009F8

MOUNT VOLUME  KA87    REV# 127.  LEFT CPU
              SCS NODE:  WACHU3, CPU # 1.
                   2
      UNIT _T$MUA7:, VOLUME LABEL "D7" 3

      60. QIO OPERATIONS THIS UNIT,  0. ERRORS THIS UNIT    4
       1. QIO OPERATIONS THIS VOLUME,  0. ERRORS THIS VOLUME
```

When media errors occur, you receive a message similar to the one shown on this page. There are messages that are due to excessive ECC rate, excessive recovery rate, and permanent (unrecoverable) rates. The text of these messages may vary, but the formats will be similar.

MEDIA ERRORS

1. Tape ID (from label)

2. Count: number of times that Volume (Tape) was mounted.

3. Number of events (in this example, write ECC corrections).

4. Rate: the number of records per event. (Event = read ECC corrections).

5. Number of events (in this example, read ECC corrections).

6. Rate: the number of records per event. (Event = read ECC corrections).

7. Number of events (in this example, the number of times write was retried/recovered).

8. Rate: the number of MBytes per event. (Event = write recoveries).

9. Number of events (in this example, the number of times read was retried/recovered).

10. Rate: the number of MBytes per event. (Event = read recoveries).

11. The number of unrecoverable (permanent) write errors on this volume.

12. The number of unrecoverable (permanent) read errors on this volume.

```
Attn:    Customer
Device:  FORCE$MUA3  (TA90 S/N: 70032159503)
   Software Revision Level:  0
   Hardware Revision Level:  0
Error:   Single Tape Volume - Excessive Read Recovery Rate
Theory:  [2.11.5.3]

Suspect:

Bad Volume - Label:  L29

   The tape volume listed has exceeded the threshold for media defects
   while reading.  The errors are currently RECOVERABLE and present little
   or no immediate data integrity risk.  However, further action may be
   required to maintain future tape library data integrity.  These errors
   may also be caused by faulty hardware.  If this drive has experienced
   experienced similar problems with different volumes, notify Digital Field Service
   with the reported Theory number.

   Suggested Recovery Procedure:

1. If the volume is defective and is part of the site
   library, discard the tape after you copy its data to a
   new volume.  The media may have been damaged in handling
   or may be worn out.

2. If the volume is defective and is not part of the site
   library, notify the creator of possible media, drive, or
   tape handling problems.

Evidence:

VOLUME  MOUNT  WRITE ECC   READ ECC   WRITE RECOV   READ RECOV    VOL PERMANENT
LABEL   COUNT  RATE        RATE       RATE          RATE          WRITE
------  -----  --BLK/ERR   (ERRCNT)-  ----MB/ERR    (ERRCNT)----  ----ERRCNT---READ
L29         1  1173 (24)   1771 (15)       0 (0)         52(4)       0       0
            2     4    3      6    5         8 7          10 9        11      12

NOTE:  Volume Theories may be incorrect if each tape volume
does not have a unique label.  All media should be initialized
with unique ANSI standard labels to take full advantage of
Volume Fault Management.

A complete Volume Report is available using SPEAR SUMMARIZE.

SYSTEM LIMITS (PER VOLUME):

   WRITE ECC RATE     READ ECC RATE  WRITE RECOV  READ RECOV  VOL PERMANENT
   BAD   MARGINAL     BAD  MARGINAL  BAD          BAD         WRITE    READ
   ------------BLKS/ERR------------  ----MB/ERR  (ERRCNT)--- --ERRCNT-----
   1000        2000    350      650       40 (3)     200 (1)      1       1

Time of error:  3-APR 17:34:12
```

TA90 Installation Checklist

This checklist is for FE's who have performed installations before.

Go to the INST pages listed in parenthesis if you need more information to successfully complete a step.

Initial Setup Procedures

__ 1. Go to INST 6 and perform all the safety checks, then return here. (INST 6)

__ 2. If the dual tape control unit configuration feature is to be installed, place the dual tape control unit communication cables, and the STI-FIPS cables, in position for installation.

__ 3. Place the tape control units (TCUs) and tape transport units (TTUs) into position and connect them. (INST 10 and 11)

__ 4. On the last tape transport unit attached to the tape control unit, install the terminators and the ac power connector safety cover. (INST 22)

__ 5. Connect the dual tape control unit communicator cables and status store card (if present). (INST 30, 31, 35)

__ 6. Set the tape control unit channel addresses. (INST 40)

__ 7. Set the drive logical and physical address switches, and attach the drive address labels. (INST 50)

__ 8. Verify that the tape control unit and tape transport unit power supply jumpers are set correctly. (INST 55 and 56)

__ 9. On the tape control unit, set both the Power On/Off switch and the Unit Emergency Power Off (UEPO) switch, off. (INST 60)

__ 10. Connect the ac power cable to the customer receptacle, then power up. (INST 60)

__ 11. Check the UEPO switch for proper operation. (INST 60)

Subsystem Checkout

As you progress through the tests, note the address of any drives that do not show the display response expected, and note whether the drive failed during checkout from TCU0 or TCU1.

__ 1. Check all drive switches for correct function. (TCU0, INST 70) (TCU1, INST 76)

__ 2. Start the Offline Checkout procedure. (TCU0, INST 70-74) (TCU1, INST 76-83)

   a. Set both TCUs to Offline Test and set the Test/Normal switches to Test.

   b. Power both TCUs off, then back on.

__ 3. On the tape control unit 0 switch panel, set the Online Test/Offline Test switch to Online Test. (TCU0, INST 78) (TCU1, INST 81)

__ 4. On the tape control unit 1 switch panel, set the Online Test/Offline Test switch to Offline Test. (TCU0, INST 78) (TCU1, INST 83)

__ 5. Test each drive from TCU0. Set the Test/Normal switch to Normal when finished.

__ 6. Repeat steps 3, 4, and 5 for TCU1.

Checking the Initial Microprogram Load (IML)

__ 1. On both TCU0 and TCU1, set the Power On/Off switch to Off, then to On. (INST 83)

Final Setup Procedures

__ 1. Attach the STI cables to the TCUs. (INST 90)

__ 2. Connect any UEPO cables, if used, from the host system(s) to the TCUs. (INST 120)

__ 3. Install the radio frequency interference (RFI) shields. (INST 130)

__ 4. Replace all covers. (INST 130)

Running HSC Subsystem Diagnostics

__ 1. Run GMP from either the CE panel or the HSC (see CE/HSC 1).

__ 2. Run the ILEXER and ILTAPE. For a dual tape control unit subsystem (see INST 35, step 6).

Contents

TA90 Installation Instructions 4
Before Installation 4
Before Installation 4
Preparation 4
Tools and Test Equipment Needed 4
Action Messages 5
Safety Checks 6
Machine Ground Wire Check 6
Branch Circuit CB Switched Off Check 6
Branch Circuit CB Switched On Check 6
Installing the Tape Control Unit and the First Tape Transport Unit 10
Tape Control Unit 10
First Tape Transport Unit 11
Installing Additional Tape Transport Units 20
Connecting the Dual Tape Control Unit Communication Feature Cables 30
Installing the Status Store Card 35
Setting the Tape Control Unit Addresses 40
Setting the Tape Control Unit TCU0/TCU1 Switch 40
Setting the Tape Control Unit Address Switches 40
Setting the Drive Logical and Physical Addresses 50
Single Tape Control Unit Subsystem 50
Dual Tape Control Unit Subsystem 50
Checking Tape Control Unit Power Supply Jumpers 55
Checking Tape Transport Unit Power Supply Jumpers 56
Connecting the Tape Control Unit AC Power Cable 60
Checking the Unit Emergency Power Off (UEPO) Switch 60
Running Offline Checkout for a Single Tape Control Unit Subsystem 70
Setting up for the Checkout 70
Switching on the Power 70
Checking the Addresses 72
Checking Read/Write 72
Final Checkout 74
Checking the Initial Microprogram Load (IML) 74
Running Offline Checkout for a Dual Tape Control Unit Subsystem 76
Setting up for the Checkout 76
Switching on the Power 76
Checking the Addresses, Tape Control Unit 0 78
Checking Read/Write, Tape Control Unit 0 78
Final Checkout of Tape Control Unit 0 81
Checking the Addresses, Tape Control Unit 1 81
Checking Read/Write, Tape Control Unit 1 83
Final Checkout of Tape Control Unit 1 83
Checking the Initial Microprogram Load (IML) 83

Analyzing Drive Troubles 90
Running GMP on Failing Drives 90
Setting Base Addresses 90
Installing STI Cables 90
Subsystem Interconnections 91
Installing the Unit Emergency Power Off (UEPO) Cable 120
Installation Checks 130
Installing the Radio Frequency Interference (RFI) Frame Pans and End Plates 130
Replacing Subcovers and Covers 130
Running ILEXER and ILTAPE 131

Adding Tape Transport Units to an Installed Subsystem 135
Adding Tape Transport Units 135
Before You're Through 137

TA90 Relocate or Discontinue 140
Getting Started 140
Removing Unit Emergency Power Off (UEPO) Cables 140
Removing STI-FIPS Cables 150
Removing Power 160
Removing Dual Tape Control Unit Communication Feature Cables 170
Disconnecting the Tape Transport Units and the Tape Control Unit 180

Installing the Automatic Cartridge Loader 900
Installation Instructions 900
Preparation 900
Purpose and Description 900
Special Tools and/or Materials Required 900
Safety 900
TA90 Subsystem Power 900
Details Of Installation 910
Remove Drive Drawer Clear Plastic Cover 910
Remove Drive Drawer Cover 910
Remove the Cartridge Latch Assembly 920
Install the Load Assembly 930
Install the Power and Signal Cables 950
Install the Automatic Cartridge Loader 960
Install the Drive Clear Plastic Cover 980
Test Procedure 980
Check Latch Solenoid Cable 980

Before Installation

CAUTION:

TILT HAZARD CAUTION

Do NOT open both drives of a tape transport unit that is not bolted to another tape transport unit or tape control unit. With the automatic cartridge loader feature installed and both drive drawers fully extended, a tape transport unit that is not bolted to another unit will tilt forward with about 20 pounds of force applied to the top of either automatic cartridge loader.

This procedure describes all installation actions in detail, step-by-step. Mark off each step as it is completed. Two FEs are needed for the mechanical installation of a dual tape transport unit subsystem, to reduce installation time. Only one FE is needed to run the checkout and diagnostic procedures.

The Installation Overview chart shows the sequence of steps to complete the installation; however, the chart provides an overview only. Follow the step by step instructions as you proceed through the installation.

Preparation

— Inventory the items on each Bill of Material to verify that all items were received.

Tools and Test Equipment Needed

The following items are needed to complete the installation:

- Cleaner cartridge
- IML Diskette

  Note: For dual TCU installations, ensure that all IML diskettes are at the same EC level.

- ILEXER and ILTAPE routines
- Blank scratch cartridge.

  Note: Only one blank cartridge is required; however, a second blank cartridge, if available, reduces the installation time.

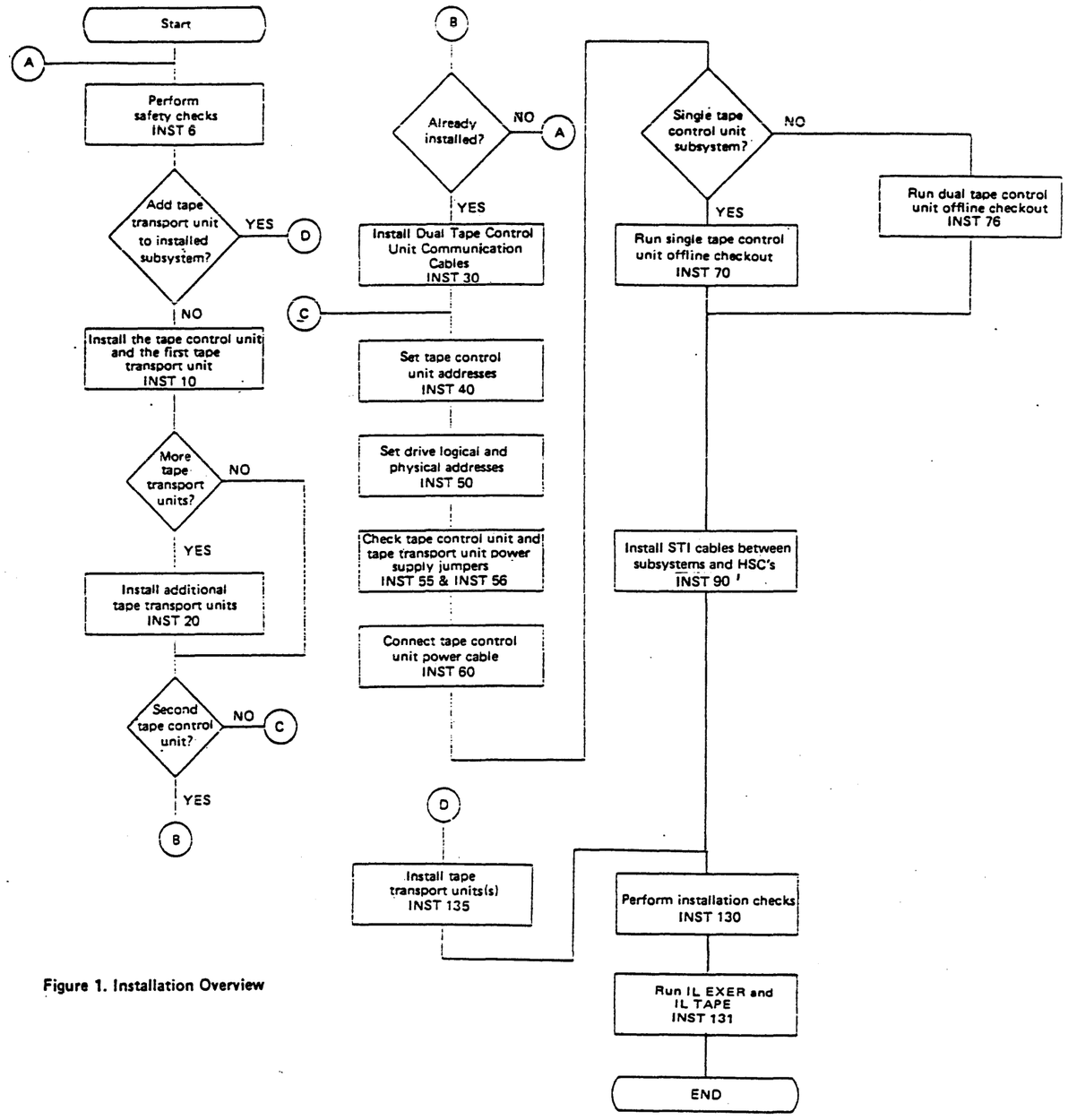

Figure 1. Installation Overview

ACTION Messages

The following procedures are used to correct or help isolate drive problems. The FE is sent here from the INST section following an ACTION message on a drive display. ACTION messages are generated for problems encountered after loading a cartridge into a drive during the installation checkout procedures.

Go to the message that matches the message on the drive display that sent you here and perform the actions listed in the Actions column.

Return to the procedure that sent you here when you have completed the actions listed in the Actions column.

Messages	Description	Actions
ACTION 1	The cartridge failed to load correctly.	1. Unload and reload the cartridge. 2. If the same failure occurs, stop testing and note the address of the failing drive and the TCU controlling that drive. 3. Return to the procedure that sent you here and continue testing with the next drive displaying TEST.
ACTION 2	The cartridge may be set to file protect.	1. Unload the cartridge and check to see that it is not set to file protect. 2. Reload the cartridge and if it fails again, try a different cartridge. 3. If the second cartridge fails in the same way, stop testing and note the address of the failing drive and the TCU controlling that drive. Return to the procedure that sent you here and continue testing with the next drive displaying TEST.
ACTION 3	Incorrect address.	1. Restart testing using the next drive. 2. If the next drive to be tested fails in the same way, a cable connection problem may exist. 3. Note the address(es) of the failing drive(s) and the TCU controlling the drive(s), then return to the procedure that sent you here and continue testing.
ACTION 4	Channel address parity error.	1. Go to INST 40 and check the address switch settings. 2. If the problem remains, run GMP, then return to the procedure that sent you here and continue testing.
ACTION 5	Drive did not get patches correctly. This could be the drive patch or the Automatic Cartridge Loader code load.	1. Ensure that the IML diskette is the correct one for the subsystem. If not, replace it and start the installation checkout again from power on. 2. If the diskette is correct, continue using only the drives that display TEST.
ACTION A	Channel address parity error on channel A.	1. Go to INST 40 and check the address switch settings. 2. If the problem remains, run GMP, then return to the procedure that sent you here and continue testing.
ACTION B	Channel address parity error on channel B.	1. Go to INST 40 and check the address switch settings. 2. If the problem remains, run GMP, then return to the procedure that sent you here and continue testing.

TA90 Installation Instructions

Before starting the installation, perform the following safety checks:

Safety Checks

Machine Ground Wire Check

__ 1. **DANGER**

> **Hazardous electrical voltages are present in the receptacle.**

Use the volt/ohm meter to ensure that:

a. The resistance between the machine frame and the ground pin on the power plug is less than 0.1 ohm.

b. The resistance between the machine frame and ground pin (pin 4) on the output socket of the tape control unit and each tape transport unit is less than 0.1 ohm. See diagram A below.

c. The resistance between the machine frame and ground pin (pin 4) on the input cable assembly connector of each tape transport unit is less than 0.1 ohm. See diagram B below.

If the resistance is greater than 0.1 ohm, determine the cause and correct it before proceeding with the installation.

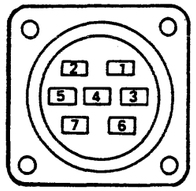

Diagram A
Output Socket (TCU and TTU)

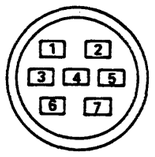

Diagram B
Input Cable Assembly (TTU)

Branch Circuit CB Switched Off Check

__ 1. **DANGER**

> **Hazardous electrical voltages are present in the connector. Do not touch the outlet case with anything other than test probes until step 3 is completed.**

Have the customer find and switch off the branch circuit CB.

__ 2. Check the voltage from the outlet case to the building ground for less than 1.0 V ac. (Begin with the meter scale that is appropriate for normal line voltage checks.)

__ 3. Check the voltage from the ground pin to the building ground for less than 1.0 V ac. If the voltage is less than 1.0 V ac, the outlet is now safe to touch.

__ 4. **DANGER**

> **Hazardous electrical voltages are present. Do not touch the internal parts (pins and sockets) of the outlet until step 5 is completed.**

Check the resistance from the ground pin to the outlet case for a reading of less than 0.1 ohm.

Check the resistance from the ground pin to the building ground for reading of less than 0.1 ohm.

A reading of less than 0.1 ohm indicates the presence of a safe, continuous grounding conductor.

__ 5. Measure the phase-to-phase voltage and the phase-to-ground voltage at the outlet.

Measure the phase-to-neutral voltage (if present) and the neutral-to-ground voltage (if present).

All voltage values are to be less than 1.0 V ac.

Branch Circuit CB Switched On Check

__ 1. **DANGER**

> **Hazardous electrical voltages are present. Do not touch the outlet before meeting the following requirements of steps 1 and 2.**

Have the customer switch on the CB that supplies voltage to the receptacle.

__ 2. **DANGER**

> **Hazardous voltages are present. If the measured voltage values are less than 1.0 V ac, you can touch the outlet. Avoid contact with the internal parts (pins and sockets) of the outlet.**

Measure the voltages from the outlet case to the building ground and the outlet case to the ground pin. Voltage values are to be less than 1.0 V ac.

__ 3. At the outlet, measure the voltages from the ground pin and the neutral pin (if present) to all phases, and measure the voltages from phase to phase. This ensures that the outlet is wired correctly.

__ 4. Have the customer's branch circuit CB switched off before connecting the TA90 power cord into the outlet.

TA90 Installation Instructions

Installing the Tape Control Unit and the First Tape Transport Unit

Tape Control Unit

__ 1. Before you start installation:

__ a. Place the cables that run between the tape control units (on dual tape control unit subsystems) position for installation. Either end of the cables attaches to either of the tape control units.

__ b. Place the STI cables that come from the HSC/HSX position for installation.

These steps ensure that the cables are easily accessible when it is time to install them.

__ 2. Place the tape control unit (TCU) in the position where it is to be installed.

__ 3. Place the rear casters of the TCU so that the caster lock thumbscrews **4** are accessible.

__ 4. Lock the rear casters by turning the caster lock thumbscrews clockwise until they are tight.

__ 5. Open the front and rear covers.

__ 6. Remove the left and right outside covers. See CARR-TCU 2-1 for procedures to remove the covers from the tape control unit.

The covers are not reinstalled until after the hardware is completely installed.

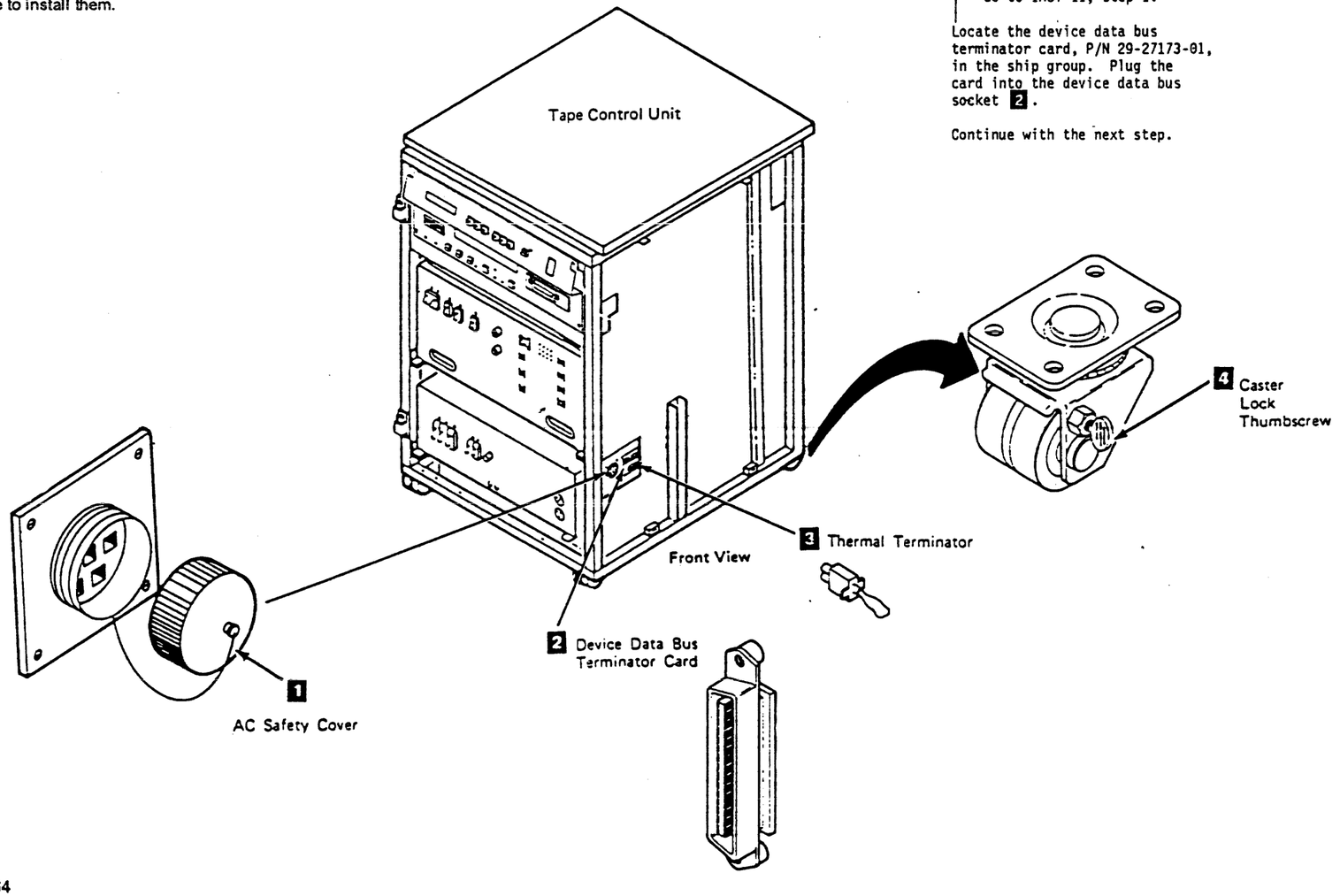

__ 7. Remove the rear safety cover. See CARR-TCU 2-1 for the tape control unit cover removal procedures.

Do not reinstall the safety cover until after you have installed the Unit Emergency Power Off (UEPO) cable (INST 120).

__ 8. Remove the drip-screen guard. See CARR-TCU 2-1 for the tape control unit cover removal procedures.

Do not reinstall the drip-screen guard until after you have installed the Unit Emergency Power Off (UEPO) cable (INST 120).

__ 9. Is this tape control unit being installed without any tape transport units attached?

```
YES NO
|   |
|   Go to INST 11, step 1.
|
Locate the device data bus
terminator card, P/N 29-27173-01,
in the ship group.  Plug the
card into the device data bus
socket 2.

Continue with the next step.
```

__ 10. Install the safety cover **1** on the ac power cable socket.

DANGER

> **Dangerous voltages are present at the ac power cable socket. The safety cover must be on when the socket is not being used.**

__ 11. Plug the thermal terminator into the thermal connector **3**.

__ 12. Go to INST 22, step 18.

Installing the Tape Control Unit and the First Tape Transport Unit (Continued)

First Tape Transport Unit

CAUTION:

TILT HAZARD CAUTION

Do NOT open both drives of a tape transport unit that is not bolted to another tape transport unit or tape control unit. With the automatic cartridge feature installed and both drive drawers fully extended, a tape transport unit that is not bolted to another unit will tilt forward with about 20 pounds of force applied to the top of either automatic cartridge loader.

__ 1. Place the tape transport units near the area where they are to be installed.

__ 2. Place the first tape transport unit **2**, to the right of the tape control unit **1**, (as you face the front of the tape control unit) about 20 cm (8 in.) from the tape control unit.

__ 3. Open the front and rear covers.

__ 4. Plug the tape transport unit AC power connector **7** into the tape control unit AC socket **10**.

Ensure that the AC power cable is routed away from the compressor motor and is fastened to the back of the frame **11** to prevent pinching the cable when the units are moved together.

__ 5. Connect the read bus cables **6** from the tape transport unit to the tape control unit read bus connectors **5**.

Ensure that the local (bus A) and the remote (bus B) cables are plugged into the proper sockets on the tape control unit, making sure they are not crossed.

__ 6. Connect the device data bus cable **9** from the tape transport unit to the tape control unit device data bus connector **3**.

Fasten the cable in place with the retaining screws.

__ 7. Connect the thermal cable **8**, on the tape transport unit to the thermal connector **4**, on the tape control unit.

__ 8. Continue to the next step on INST 13.

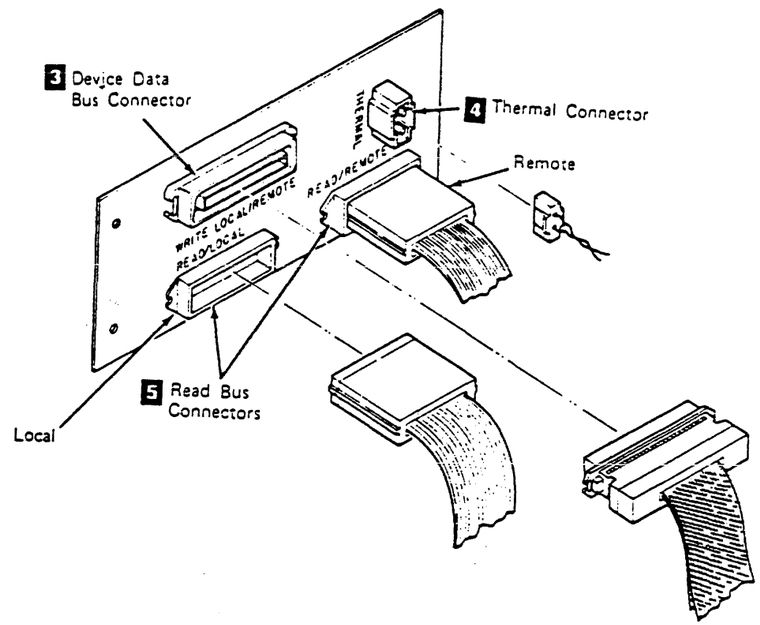

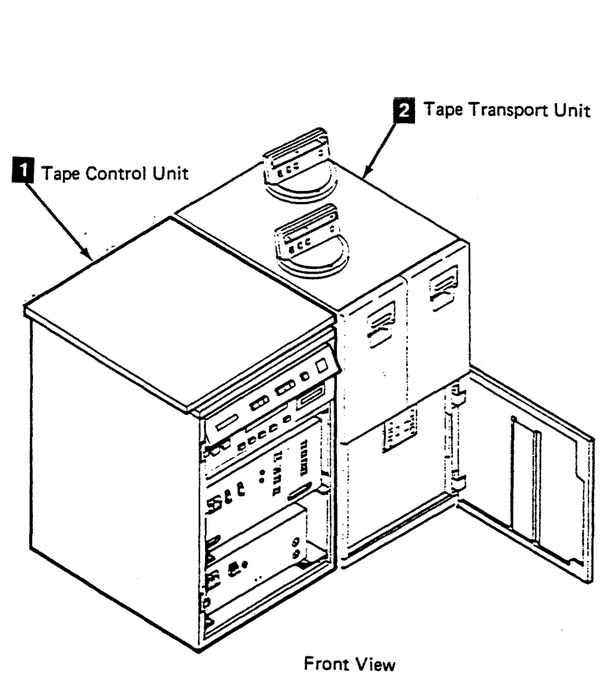

Front View

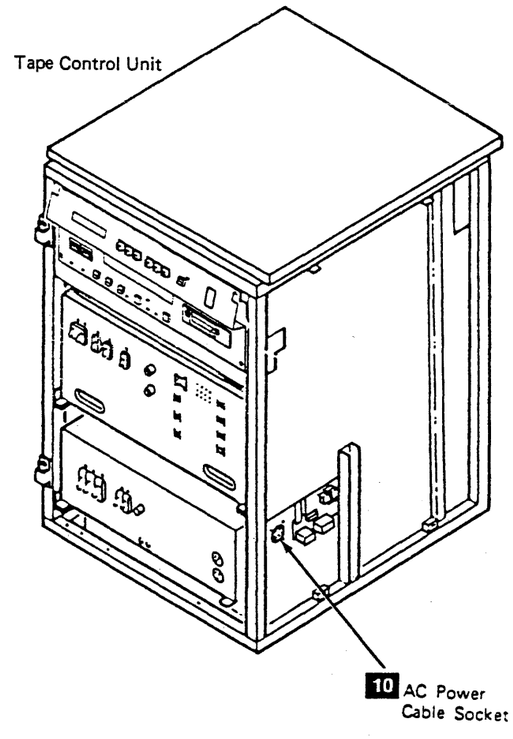

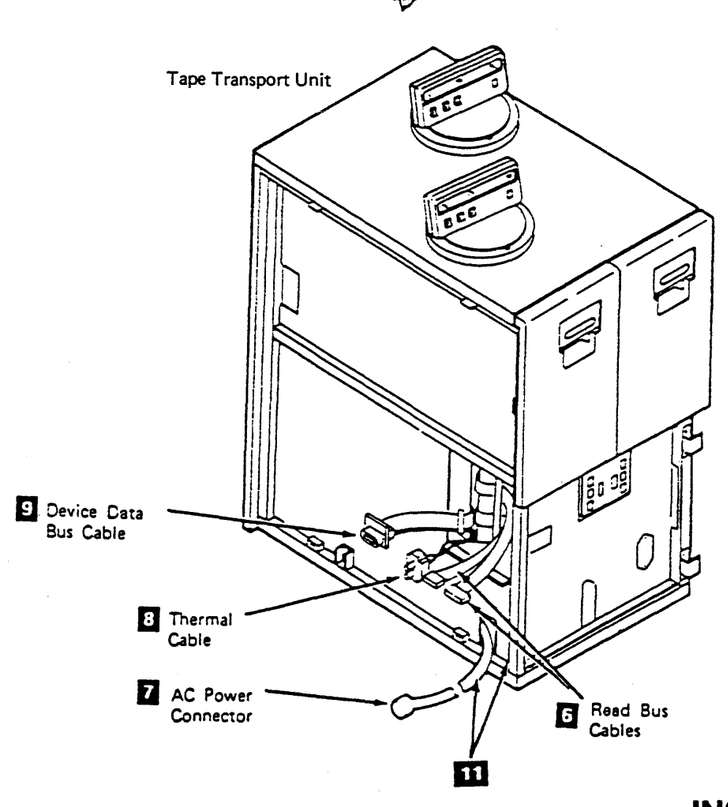

Installing the Tape Control Unit and the First Tape Transport Unit (Continued)

First Tape Transport Unit (Continued)

__ 9. **Warning:** Be careful that the cables do not get pinched between the frames or covers.

The device data and read bus cables should be folded in toward the middle of the machines. Ensure the power cable is not pinched between the machine frames.

Push the tape transport unit against the tape control unit.

Note: Be sure the position of the casters does not prevent the tape transport unit frame from fitting snugly against the tape control unit frame.

__ 10. Fasten the tape control unit to the tape transport unit by installing a hex bolt and washer at the rear of the tape control unit **1**, and at the front of the tape transport unit **2**. It may be necessary to remove the Tape Transport Unit Front Safety cover to install hex bolt **2**. See CARR-DR 2-1 if the cover needs to be removed.

Hex bolts and washers are part of the ship group.

Note: If the tape control unit and tape transport unit are not correctly aligned, the covers may bind. Ensure that the covers are not binding.

__ 11. Place the rear casters so the caster lock thumbscrews **3** are accessible.

__ 12. Lock the rear casters on the tape transport unit by turning the caster lock thumbscrews clockwise until they are tight.

Before You're Through...

Are you installing additional tape transport units to this tape control unit?

```
YES NO
|   |
|   Go to INST 22, step 14.
|
Go to INST 20 to install additional tape
transport units.
```

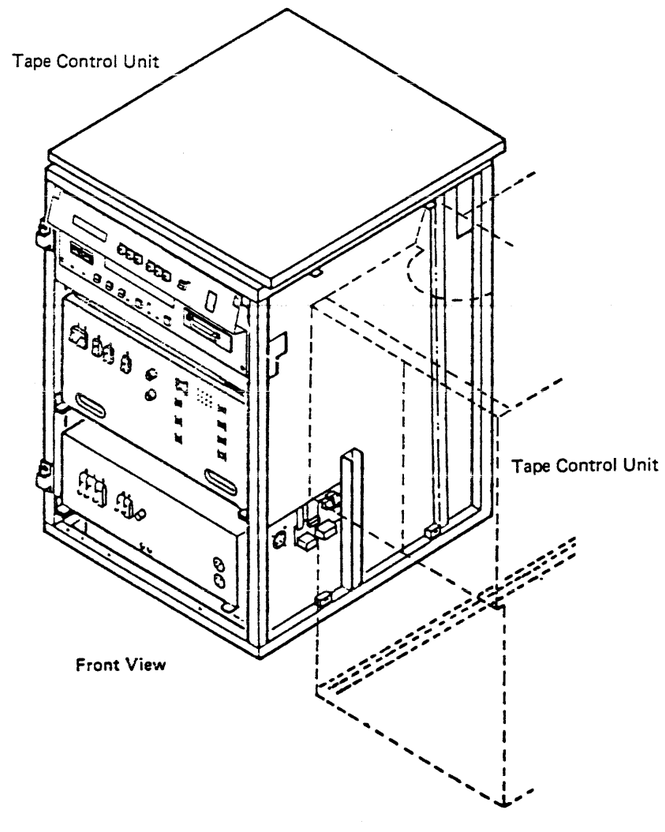

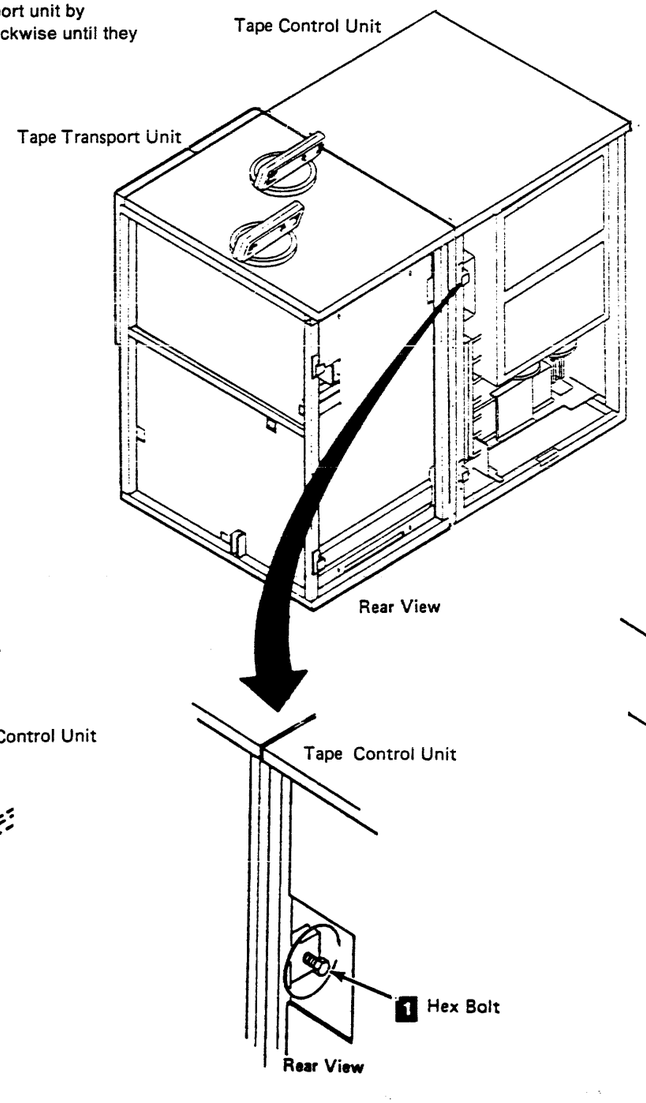

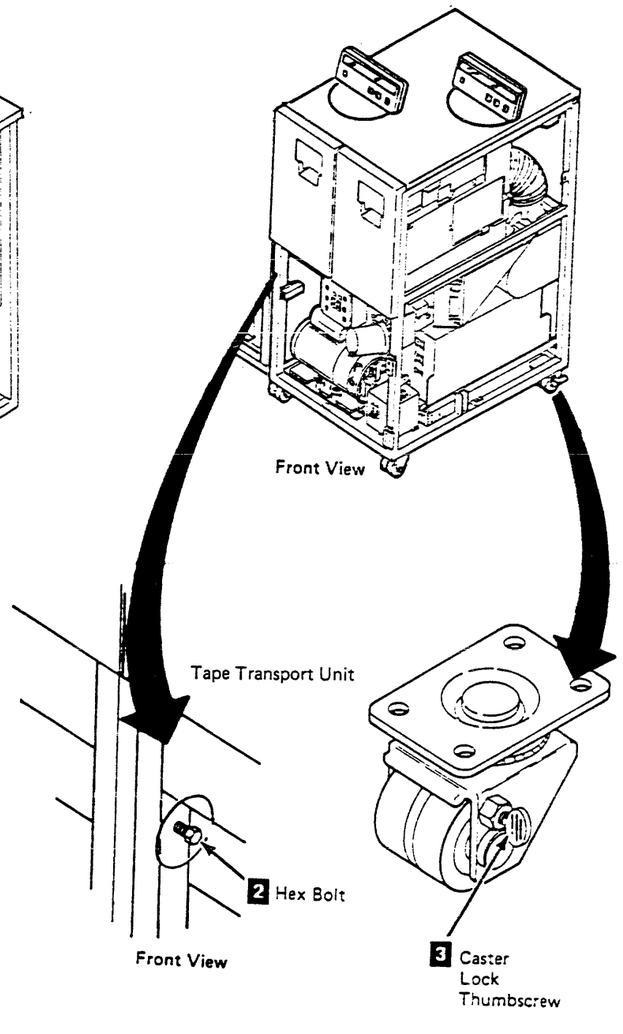

TA90 Installation Instructions

Installing Additional Tape Transport Units

CAUTION:

TILT HAZARD CAUTION

Do NOT open both drives of a tape transport unit that is not bolted to another tape transport unit or tape control unit. With the automatic cartridge feature installed and both drive drawers fully extended, a tape transport unit that is not bolted to another unit will tilt forward with about 20 lbs. of force applied to the top of either automatic cartridge loader.

__ 1. Place the the next tape transport unit into position.

__ 2. Open the front and rear covers.

Warning: Ensure that the power cable is not pinched between the machine frames.

__ 3. If the safety cover has the retainer tightened over it, loosen the screw holding the retainer to the ac power cap, rotate the retainer and retighten the screw.

__ 4. Connect the next tape transport unit's ac power cable 5 to the preceding tape transport unit's power cable socket 8 after removing the socket safety cover (if not already removed).

Ensure that the ac power cable is routed away from the compressor motor and is fastened to the back of the frame 9 to prevent pinching the cable when the units are moved together.

__ 5. Connect the device data bus cable 7 from the next tape transport unit to the preceding tape transport unit 3.

Fasten the cable in place with the retaining screws.

__ 6. Connect the two read bus cables 4 from the next tape transport unit to the preceding tape unit 1.

Ensure that the local (bus A) and the remote (bus B) cables are plugged into the proper sockets on the tape transport unit, making sure they are not crossed.

__ 7. Connect the thermal cable 6 on the next tape transport unit to the thermal connector 2 on the preceding tape transport unit.

__ 8. Continue with the next step on INST 21.

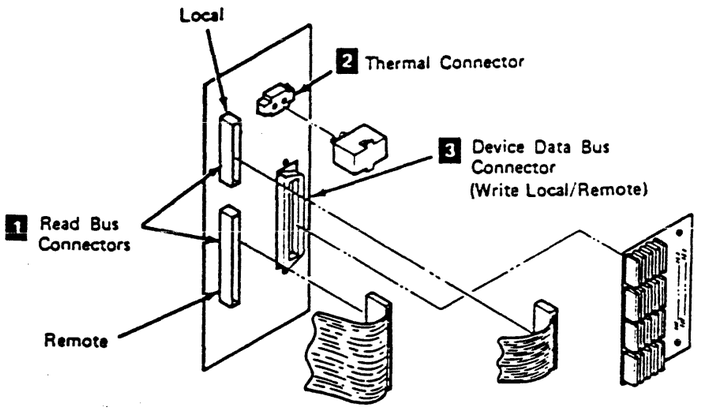

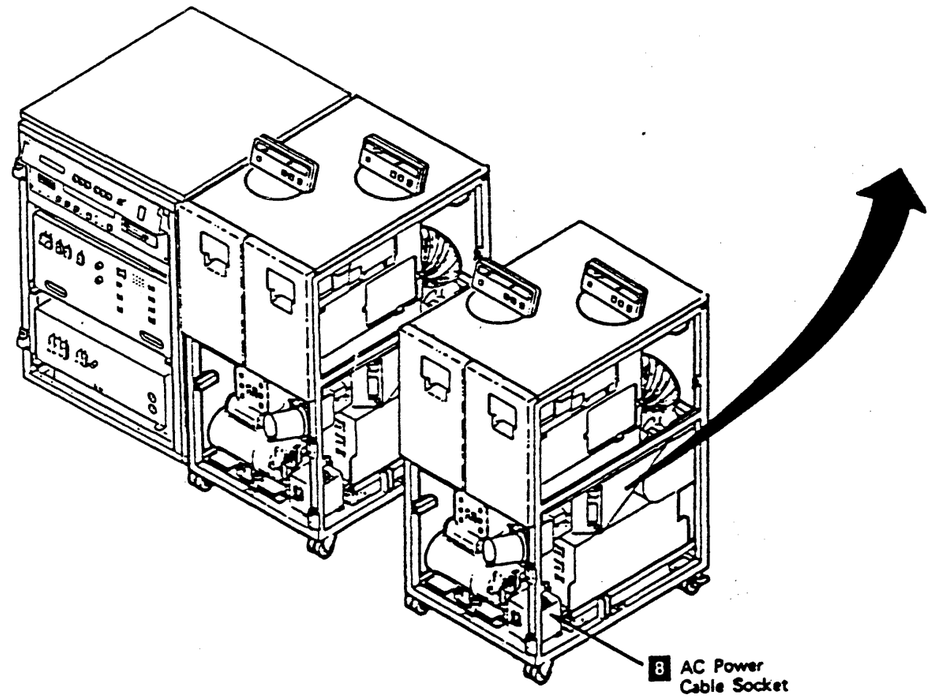

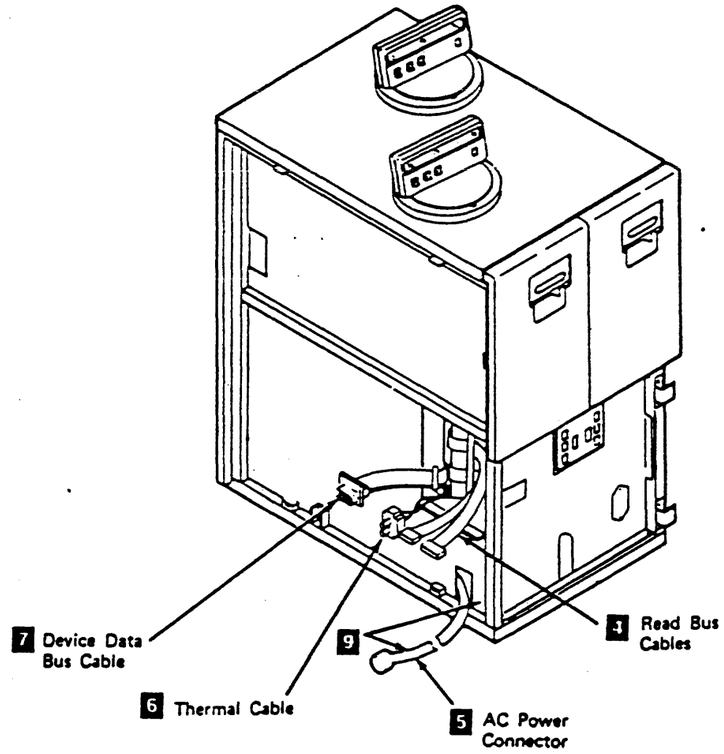

Installing Additional Tape Transport Units (Continued)

__ 9. Place the next tape transport unit against the preceding tape unit.

Warning: When installing a tape transport unit to a tape transport unit with the automatic cartridge loader feature installed on drive 1, drive 1 must be opened approximately 5 cm (2 in.) to prevent the conductive seal from being pinched between the tape transport unit frames.

Note: Be sure the position of the casters does not prevent the tape transport units from fitting snugly together.

__ 10. Fasten the new tape transport unit to the preceding tape unit by installing a hex bolt and washer at the rear of the tape transport unit **1**, and at the front of the tape transport unit **2**. It may be necessary to remove the Tape Transport Unit Front Safety cover to install hex bolt **2**. See CARR-DR 2-1 if the cover needs to be removed.

Note: If the tape transport units are not correctly aligned, the covers may bind. Ensure that the covers are not binding.

__ 11. Place the rear casters on the new tape transport unit so the caster lock thumbscrews **3** are accessible.

__ 12. Lock the rear casters on the new tape transport unit by turning the caster lock thumbscrews clockwise until they are tight.

__ 13. Repeat the steps on INST 20 and INST 21, for each additional tape transport unit that is attached to the tape control unit.

__ 14. Go the next step on INST 22.

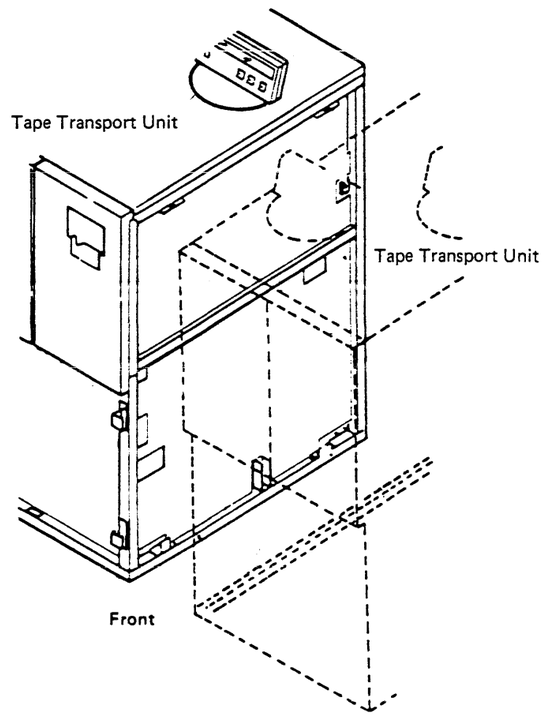

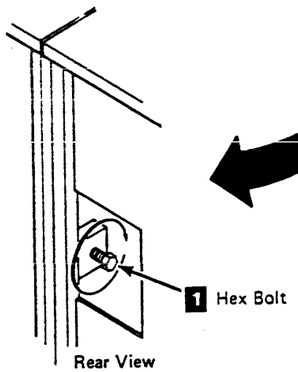

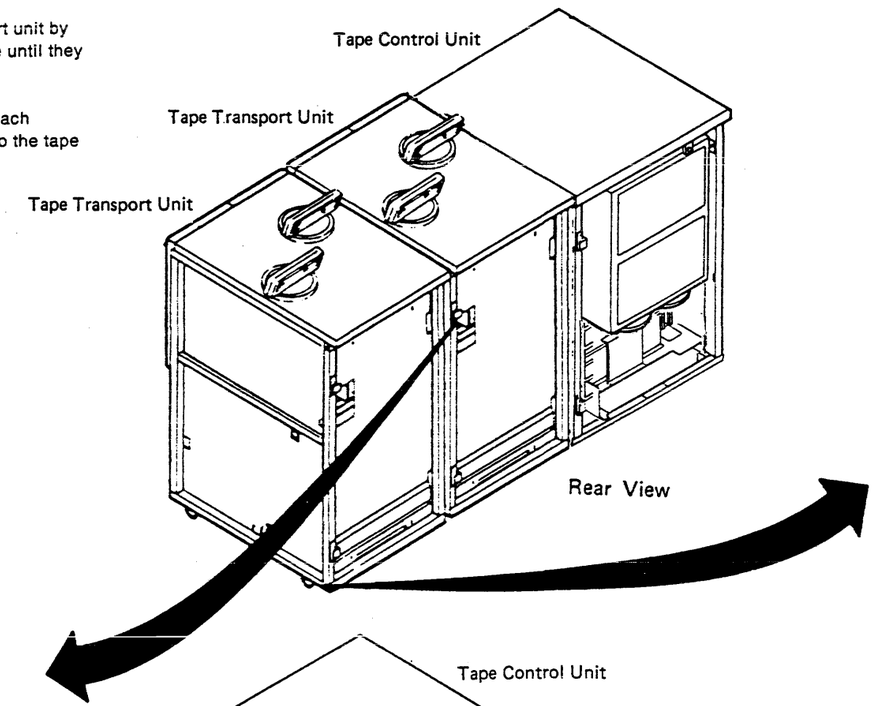

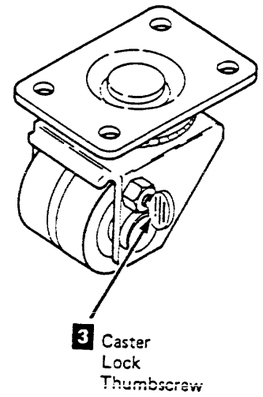

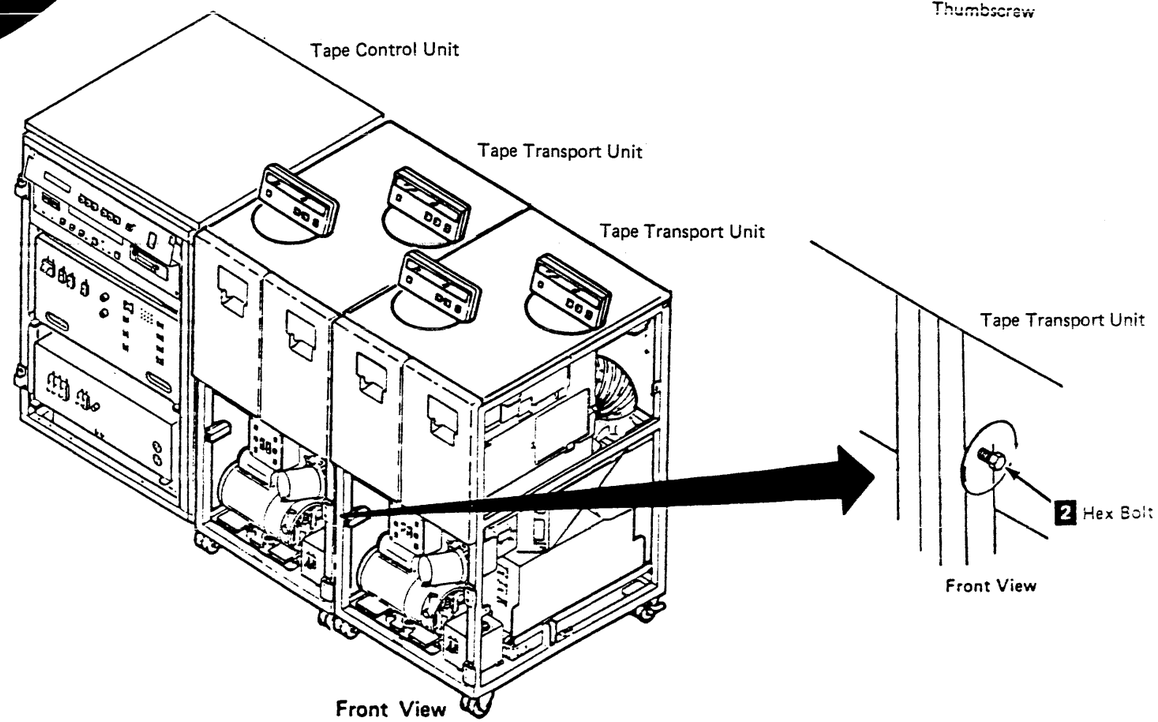

Installing Additional Tape Transport Units (Continued)

On the last tape transport unit attached to the tape control unit:

__ 15. Locate the device data bus terminator card P/N 29-27173-01, in the ship group. Plug the card into the device data bus socket **4**.

__ 16. Screw the safety cover **1** onto the ac power cable socket.

DANGER

> **Dangerous voltages are present at the ac power cable socket. The safety cover must be on when the socket is not being used.**

__ 17. After the safety cover is in place, loosen the screw holding retainer **5** to the ac power box. Rotate the retainer and tighten the screw with the retainer positioned to prevent the safety cover from being removed.

__ 18. Plug the thermal terminator **3** in the thermal connector **2**.

__ 19. Are you installing a second tape control unit that is to be attached to this tape control unit with feature cables?

```
YES NO
 |   |
 |   Go to INST 40.
 |
Have you already installed the second
tape control unit and the attached
tape transport unit?

YES NO
 |   |
 |   Return to INST 10 and repeat the
 |   procedure for the second
 |   tape control unit
 |
For a dual tape control unit subsystem, each
tape control unit has a unique identity:  TCU0
or TCU1.  The identification switches
will be set later during the installation.

Go to INST 30 to connect the dual tape
control unit communication cables.
```

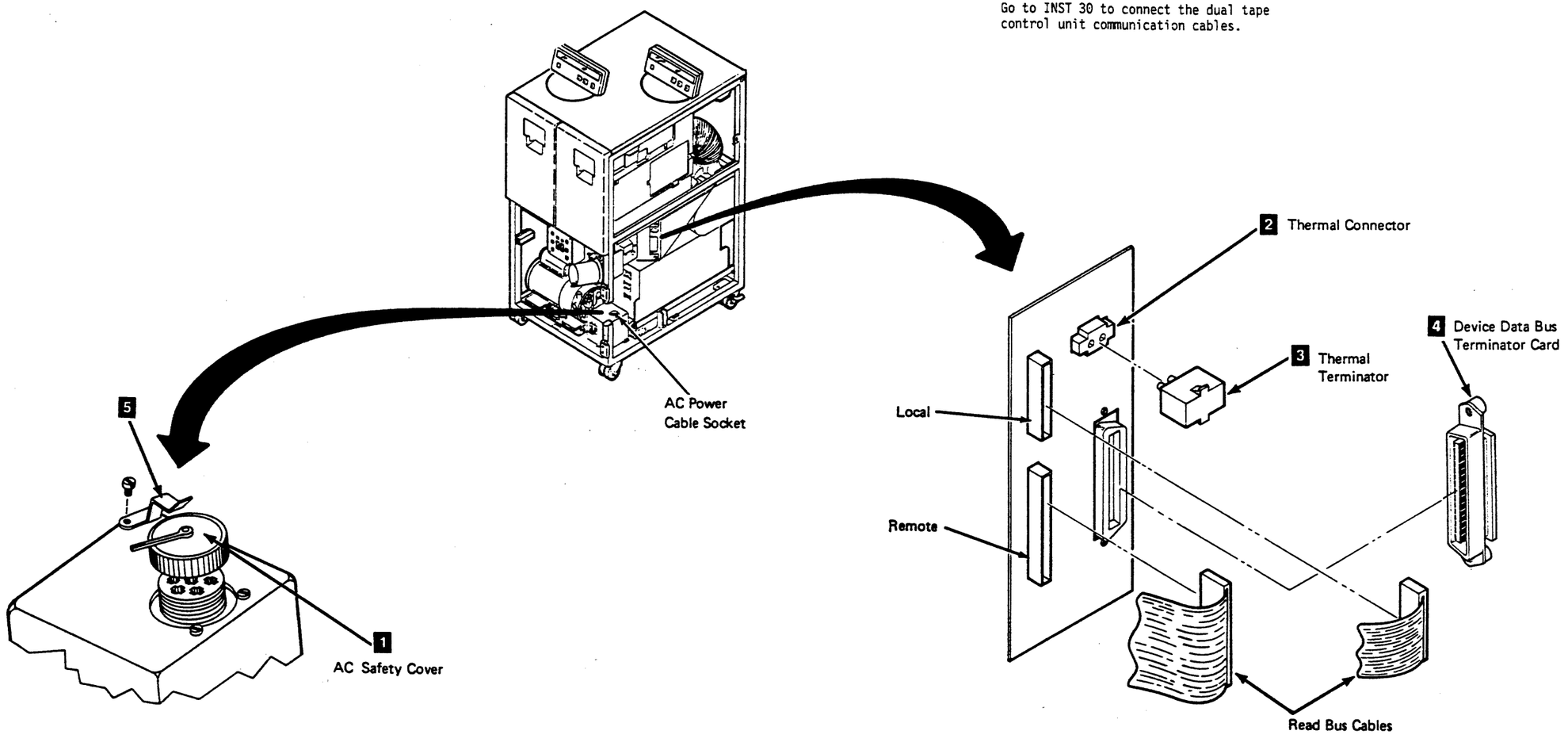

Connecting the Dual Tape Control Unit Communication Feature Cables

__ 1. Bring the cable ends up from the bottom of the tape control unit, inside the machine frame, at the rear of the tape control unit.

Note: Ensure that the cables are positioned so the cable connectors line up correctly with the cable sockets.

__ 2. Continue to the next step on INST 31.

Note: Both tape control units of a dual tape control unit subsystem must have the Improved Data Recording Capability feature before the Improved Data Recording Capability allowed switch can be set. If only one tape control unit has the feature, the Improved Data Recording Capability allowed switch must be set off. See CARR-TCU 1200 for switch position assignments.

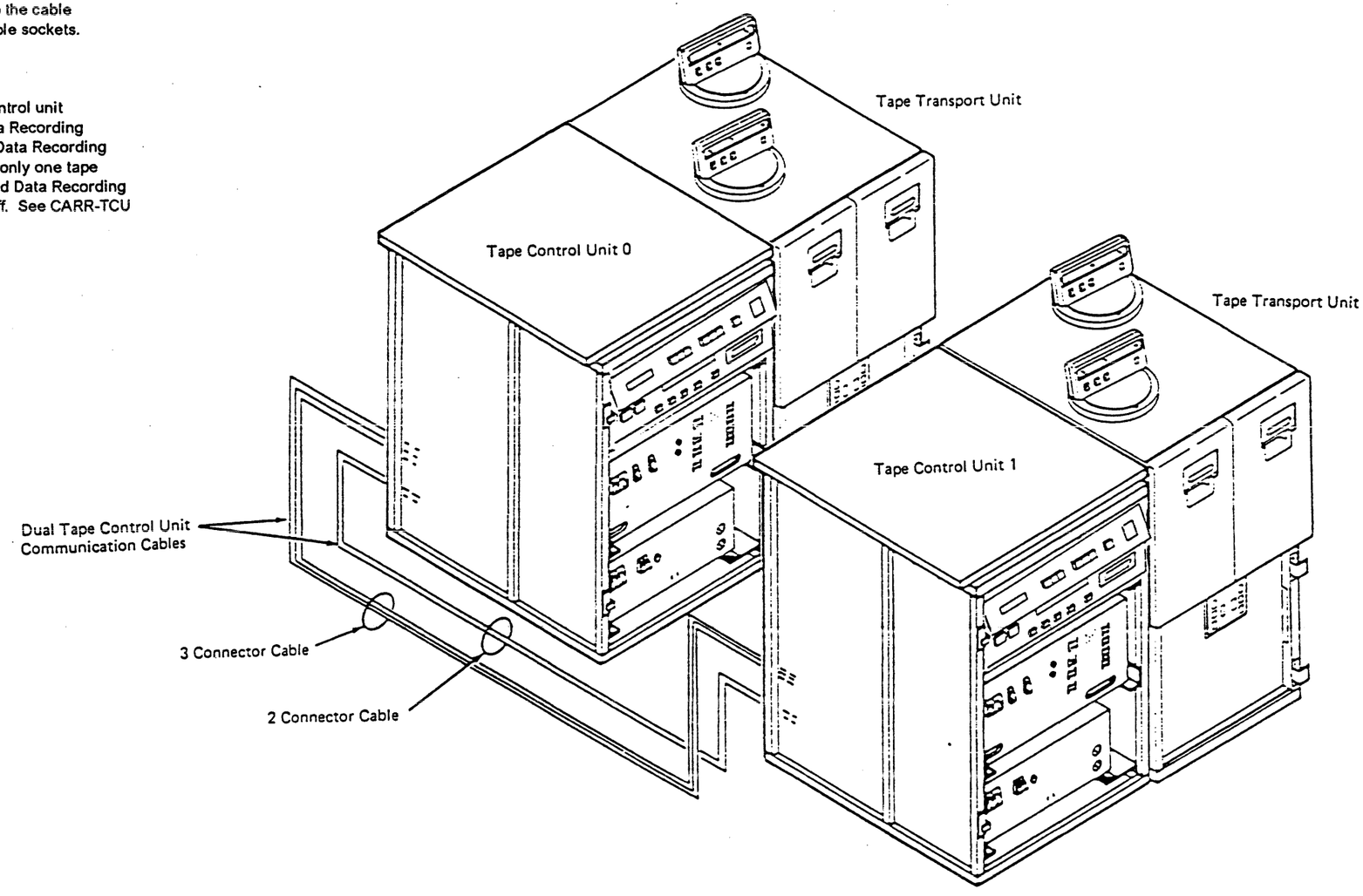

Connecting the Dual Tape Control Unit Communication Feature Cables (Continued)

__ 3. Before installing the cables, press the cable contacts firmly against the ESD pad **8** to remove any electrostatic discharge.

__ 4. Connect the grounding strip from the 3-connector cable. Attach the braided ground strap to the frame at **5**.

__ 5. Connect the grounding strip from the 2-connector cable. Attach the strip to the wingnut at **8**.

__ 6. Plug the 2-connector cable connectors **2** in sockets A1, and A2.

__ 7. Plug the 3-connector cable connectors A3, A4, and A5 **1** in sockets A3, A4, and A5, and fasten them in place with the retaining screws.

__ 8. Loosen the wingnuts **3** on the cable retaining brackets **4** and rotate the brackets away from the center guide post.

__ 9. Place the cables between the guide posts **6** and rotate the retaining brackets in to the center guide post **7**.

__ 10. Tighten the wingnuts on the retaining brackets.

__ 11. Go to INST 35 to install the Status Store Card.

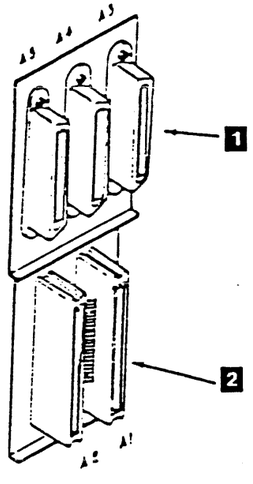

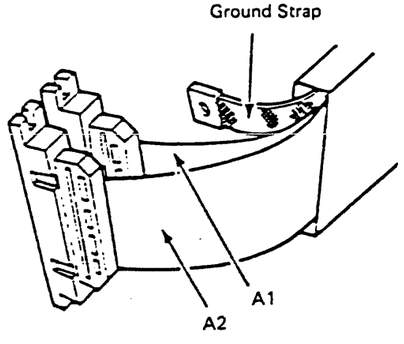

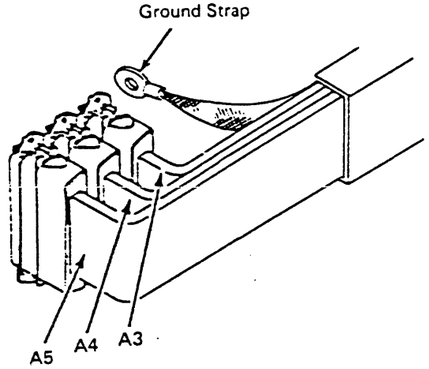

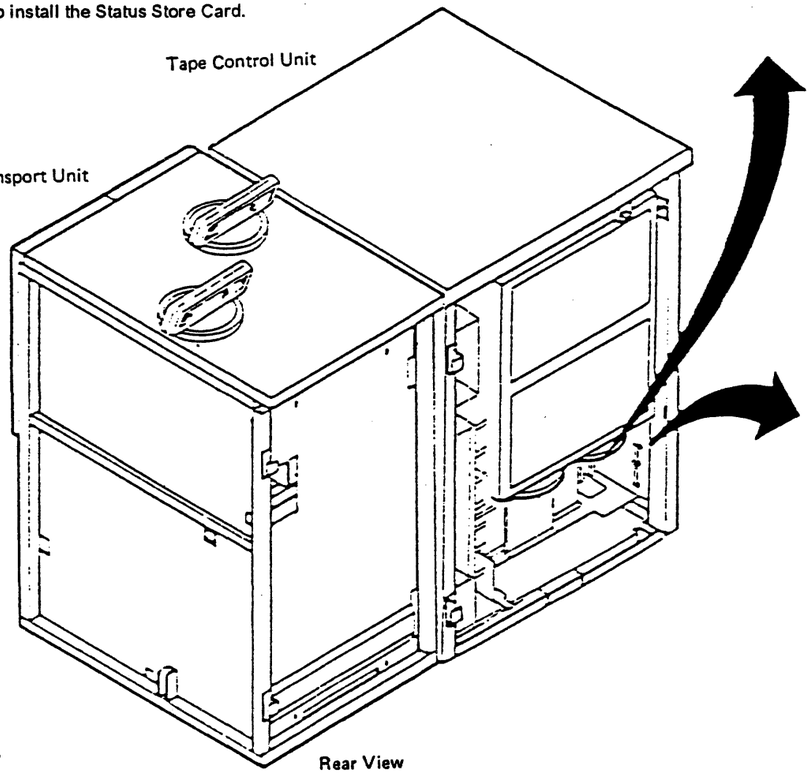

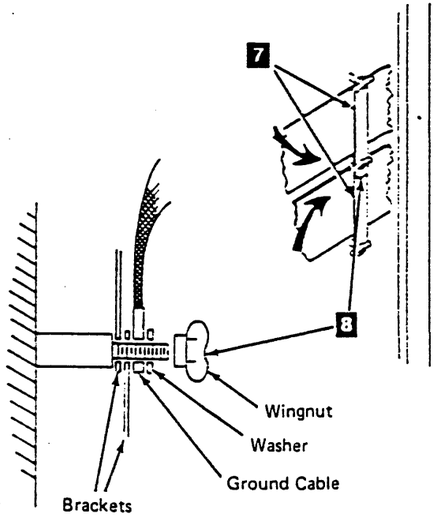

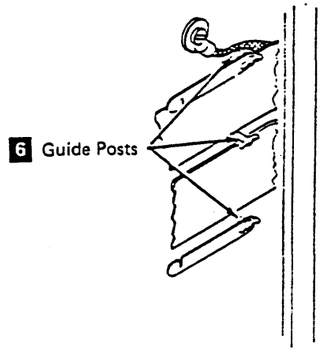

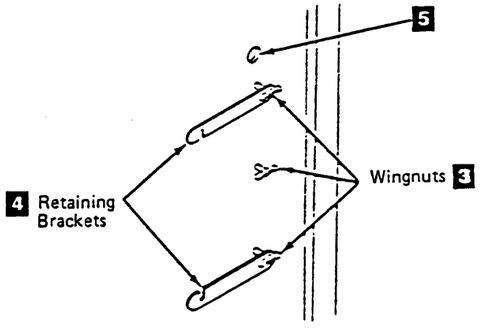

Installing the Status Store Card

Note: If a logic card is installed in location 01A-A1F2 go to step 6.

__ 1. Remove the logic card retainers 1 top and bottom from card locations 01A-A1B2 through 01A-A1G2 top and bottom.

__ 2. Remove the dummy card in location 01A-A1F2 2.

__ 3. Install the Status Store Communication Card into card location 01A-A1F2 2.

__ 4. Reinstall logic card retainers 1 top and bottom in card locations 01A-A1B2 through 01A-A1G2.

__ 5. Install top card connectors (TCC) 3 at card locations 01A-A1WFG, 01A-A1XFG, 01A-A1YFG, and 01A-A1ZFG 4.

__ 6. Testing the Dual Communication feature:

Note: This feature must be installed in both Tape Control Units before proceeding with the test procedure.

__ 7. Go to INST 40 to set the Tape Control Unit addresses and return here when complete.

__ 8. Go to INST 50 to set the Drive logical and physical addresses and return here when complete.

__ 9. On the Tape Control Unit that has drive addresses 0 - 7, using the CE Panel (see CE/HSC) pin drive 0 remotely and run ILTAPE for 5 minutes on drive 0.

__ 10. Press DIAG on the CE Panel to unpin the drive.

__ 11. On the Tape Control Unit that has drive addresses 8 - 15, using the CE Panel (see CE/HSC) pin drive 8 remotely and run ILTAPE for 5 minutes on drive 8.

__ 12. Press DIAG on the CE Panel to unpin the drive.

__ 13. Put the TA90-DC serial number label 5 on both Tape Control Units.

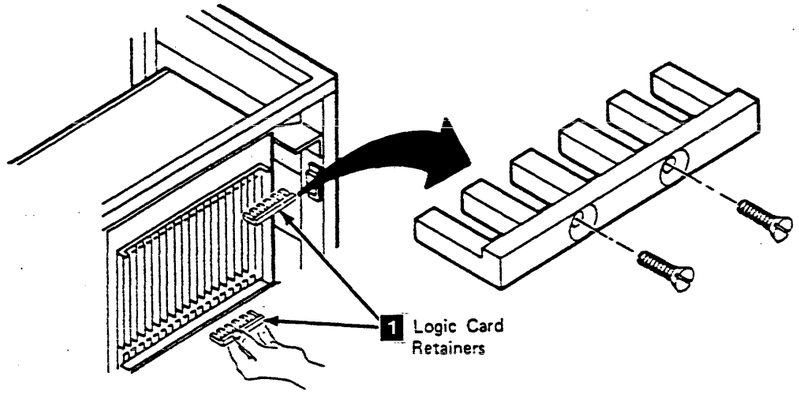

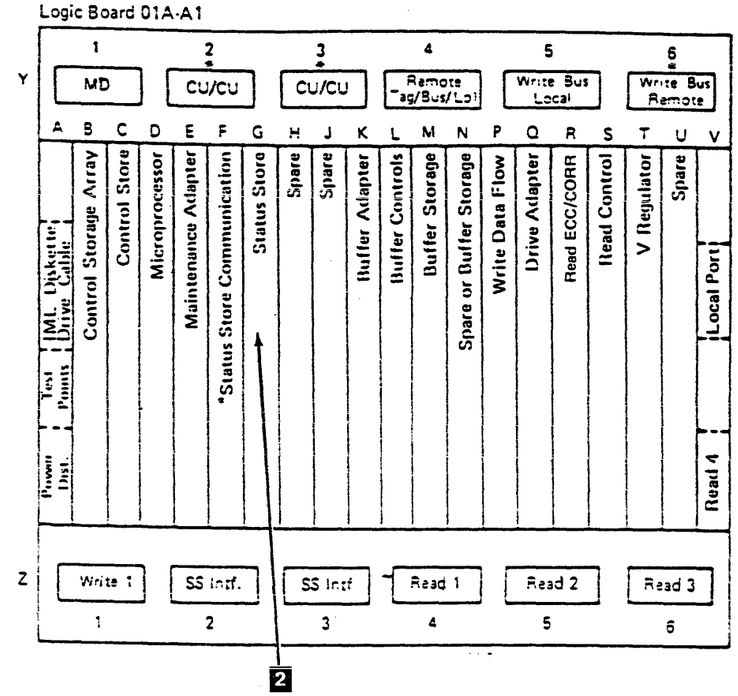

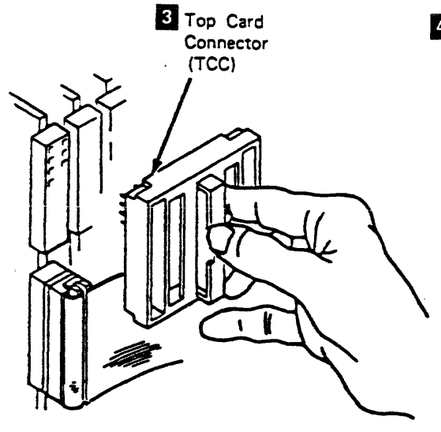

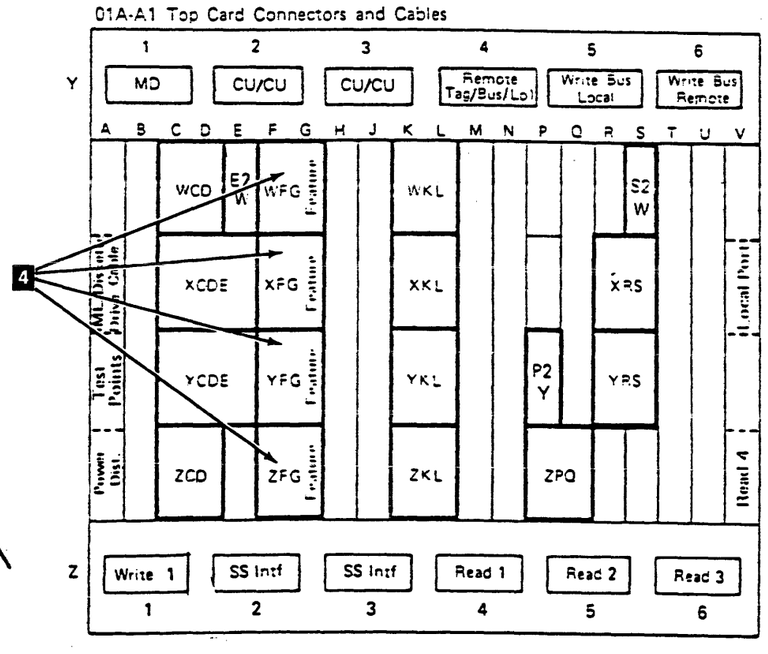

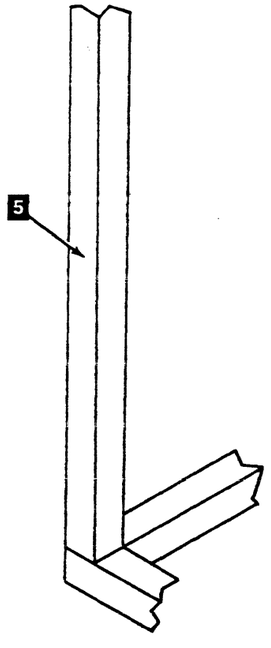

TA90 Installation Instructions

Each switch pair has two thumbwheel switches. The left switch is set to the tape control unit address. The right switch is set to a Mode/Type value to be determined by the Switch Setting Chart.

Setting the Tape Control Unit TCU0/TCU1 Switch

On a single tape control unit subsystem:

__ 1. Set the TCU0/TCU1 switch **1** to TCU0.

__ 2. Set the thumbwheel switches **2** to 0D.

On a dual tape control unit subsystem:

__ 1. On TCU0, set the TCU0/TCU1 switch **1** to TCU0.

Note: TCU0 has drive addresses 0 – 7 physically attached to the tape control unit.

__ 2. On TCU0, set the thumbwheel switches to 0D.

__ 3. On TCU1, set the TCU0/TCU1 switch **1** to TCU1.

Note: TCU1 has drive addresses 8 – F physically attached to the tape control unit.

__ 4. On TCU1, set the thumbwheel switches **2** to 1C.

Switch Setting Chart

TAPE CONTROL UNIT ADDRESS	TCU Mode/Type
	3MB
0	D
1	C

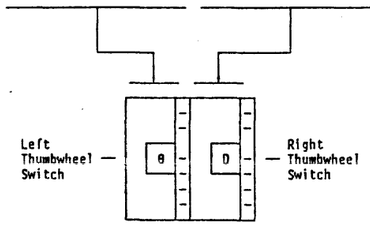

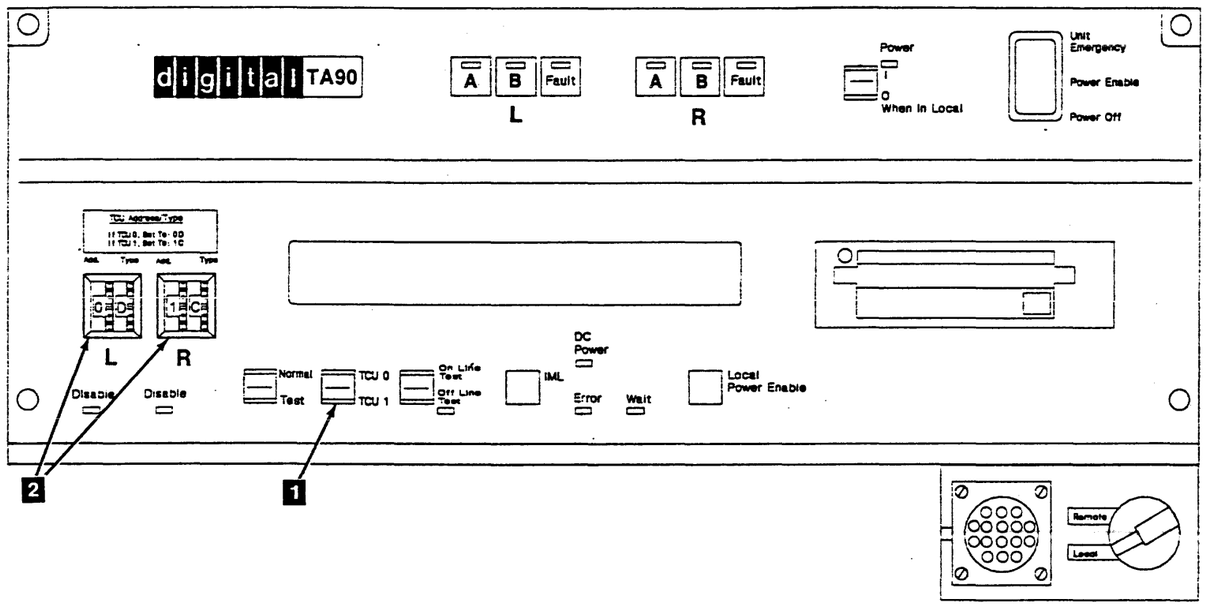

Setting the Drive Logical and Physical Addresses

Use the following procedures to set the drive logical address, and physical address. There are separate procedures for a single tape control unit subsystem and a dual tape control unit subsystem --- be sure to use the correct procedure.

Single Tape Control Unit Subsystem

__ 1. Set the drive logical address switches **1** to 0 through 7; set the drive next to the tape control unit to 0, set the next drive to 1, and so forth. See figure 1.

__ 2. Open the rear cover of the tape transport units.

__ 3. Find the physical address switch **3** on the back of the drive drawer.

__ 4. Set the drive physical address switches to match the logical address switches.

__ 5. Close the rear cover of the tape transport units.

__ 6. Ensure that the logical and physical address switches are set on aii drives before continuing.

__ 7. Go to INST 55 to check the tape control unit power supply jumpers.

Dual Tape Control Unit Subsystem

__ 1. Set the drive logical address switches **1** on the drives attached to TCU0, to 0 through 7; set the drive next to the tape control unit to 0, set the next drive to 1, and so forth. See figure 1.

__ 2. Set the drive logical address switches **1** on the drives attached to TCU1, to 8 through F; set the drive next to the tape control unit to 8, set the next drive to 9, and so forth. See figure 1.

__ 3. Open the rear cover of the tape transport units.

__ 4. Find the physical address switch **3** on the back of the drive drawer.

__ 5. Set the drive physical address switches to match the logical address switches.

__ 6. Close the rear cover of the tape transport units.

__ 7. Ensure that the logical and physical address switches are set on all drives before continuing.

__ 8. Go to INST 55 to check the tape control unit power supply jumpers.

CU0	0	1	2	3	4	5	6	7
CU1	8	9	A	B	C	D	E	F

Figure 1. Required Drive Address Values

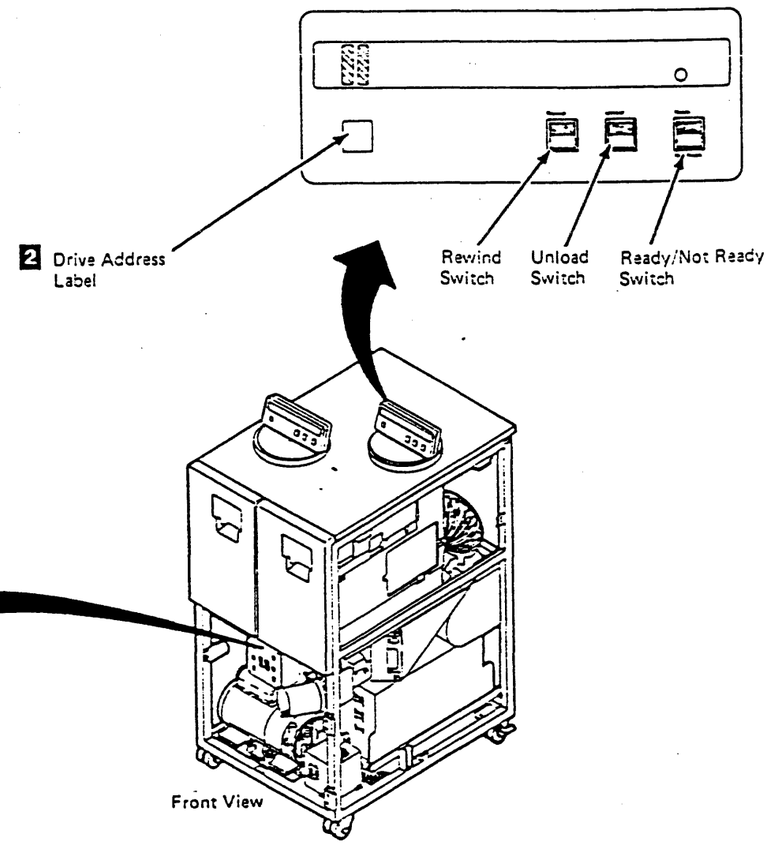

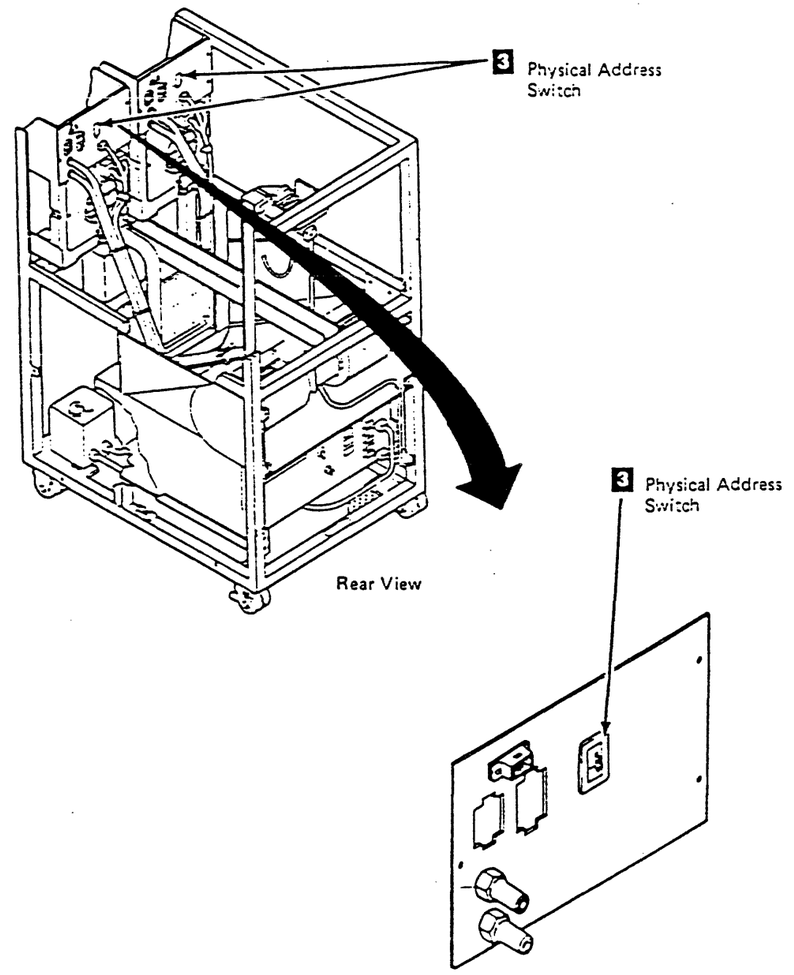

Checking Tape Control Unit Power Supply Jumpers

Check the jumpers for the tape control unit ac (PS01) power supply. If the installation is a dual tape control unit subsystem, check both tape control units.

__ 1. Remove the safety cover.

__ 2. Use one of the following two tables to check the voltage settings. Ensure the jumpers are installed correctly for the voltage being used.

Note: For 50 Hz (except Japan) machines, if the Delta/Wye jumper has to be changed (J09 and J10 on TCU-PS01), ensure that the cap is reinstalled on the empty socket.

TAPE CONTROL UNIT VOLTAGE JUMPERS 60 HZ AND 50 HZ JAPAN		
TCU INPUT VOLTAGE	POSITION OF AC (PS01) JUMPER	REF
200/208 V ac	J09	4
220 V ac	J10	4
230/240 V ac	J11	4
CONVENIENCE OUTLET		
100 V ac	J12	3
120 V ac	J13	3

TAPE CONTROL UNIT VOLTAGE JUMPERS 50 HZ (EXCEPT JAPAN)		
TCU INPUT VOLTAGE	POSITION OF AC (PS01) JUMPERS	REF
200/208 V ac	J09, J11, J13	5
220 V ac	J09, J11, J14	5
230/240 V ac	J09, J11, J15	5
380 V ac	J10, J12, J14	5
400 V ac	J10, J12, J15	5
415 V ac	J10, J12, J15	5

__ 3. Switch all of the circuit breakers on each tape control unit off then back on. See LOC 1 for the TCU dc and ac power supplies.

__ 4. Open the back of each TCU and ensure that the Service switch mounted on the gate is in the On position. See LOC 1.

__ 5. Go to INST 60 if no tape transport units are to be connected to this tape control unit

__ 6. Go to INST 56 to check the tape transport unit power supply jumpers.

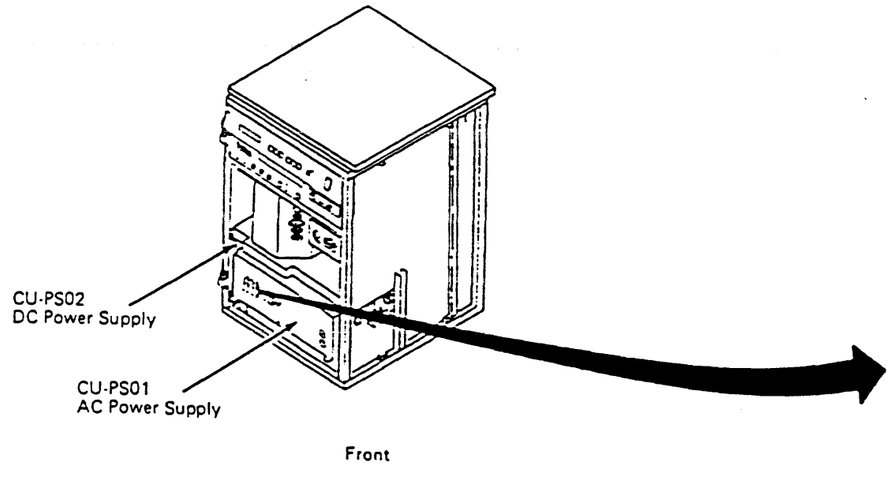

Checking Tape Transport Unit Power Supply Jumpers

Use the following table to check for correct voltage jumpering on each tape transport unit dc power supply.

Attention: The correct position of the tape transport unit's dc (PS01) jumper is determined by the tape control unit's input voltage, NOT the tape transport unit's input voltage. See the table below.

__ 1. Open the rear cover to gain access to the dc power supply.

There are two dc power supplies: see the illustrations to determine which supply is in the tape transport unit.

TAPE TRANSPORT UNIT VOLTAGE JUMPER	
TCU INPUT VOLTAGE	POSITION OF DC (PS01) JUMPER
200/208 V ac	J12
220 V ac	J13
230/240 V ac	J14
380 V ac	J13
400 V ac	J14
415 V ac	J14

__ 2. Switch all circuit breakers on each tape transport unit off then back on. See LOC 1 for circuit breaker locations.

Close the rear cover.

__ 3. Go to INST 60 to connect the tape control unit ac power cable.

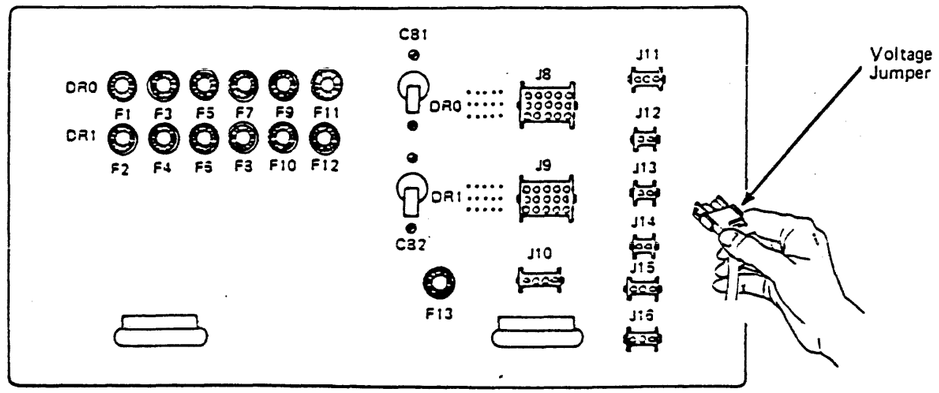

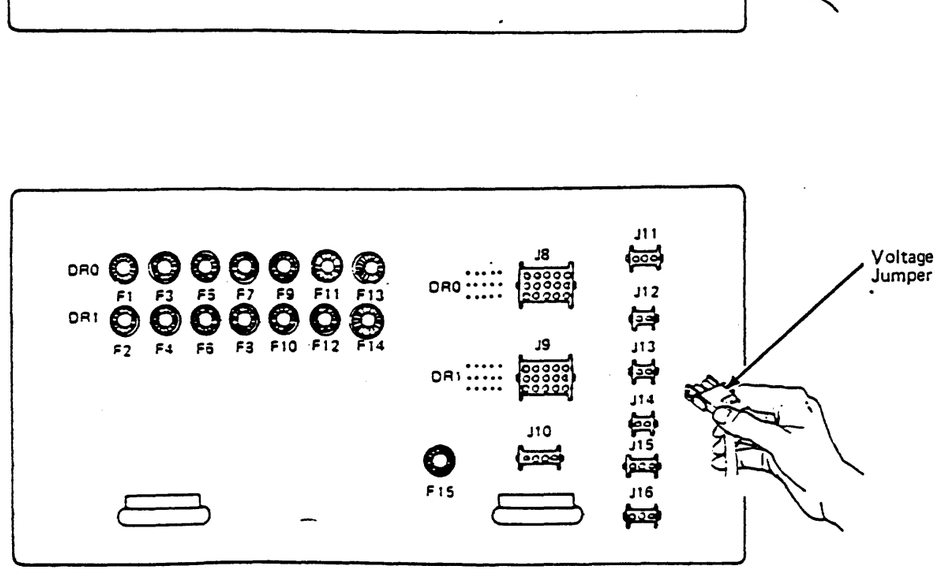

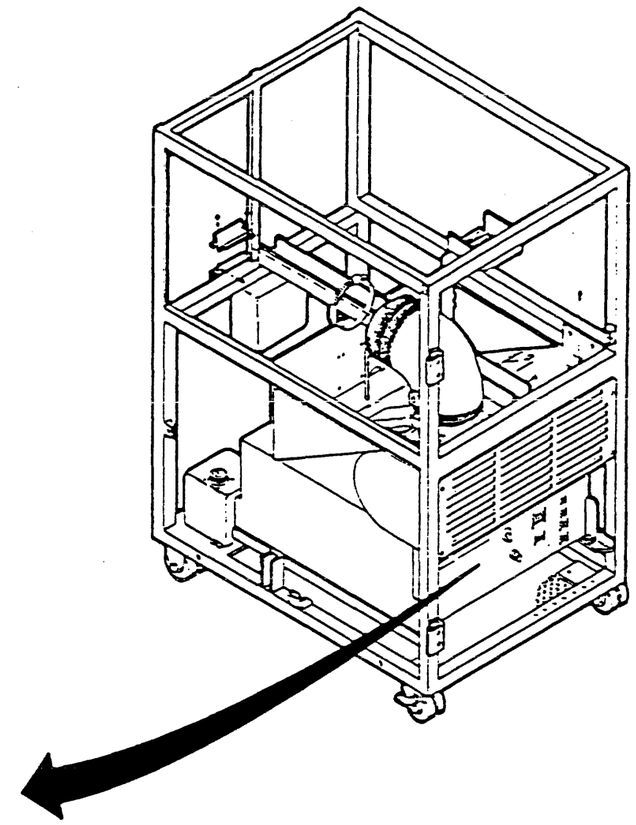

Connecting the Tape Control Unit AC Power Cable

DANGER

Make sure the circuit breaker that supplies power to the customer's receptacle is OFF.

If you are installing a dual tape control unit subsystem, power to both customer receptacles must be OFF.

Make sure that there are no cables attached to the I/O tailgate assembly in the bottom rear of the tape control unit.

Note: See INST 61 for the following locations.

__ 1. On the tape control unit operator setup (OSU) panel, set the Power On/Off switch 3 to Off. Set the Unit Emergency Power Off (UEPO) switch 4 to Power Off.

Are you satisfied that the customer receptacle and tape control unit power connector are wired correctly? See INST 6 for safety checks.

```
YES NO
|   |
|   Inform the customer to have the
|   wiring corrected.
|
Continue to the next step.
```

__ 2. Connect the tape control unit ac power connector 12 to the customer receptacle.

__ 3. On the tape control unit operator setup panel:

__ a. Set the Power On/Off switch 3 to On.

__ b. Set the Online Test/Offline Test switch 2 to Offline Test.

__ c. Set the Local/Remote switch 6 to Local.

__ 4. On each drive switch panel:

__ a. Set the Drive Power switches 13 to On.

__ b. Set the Online/Offline switches 14 to Online.

__ 5. Have the customer switch on the circuit breaker that supplies power to the customer receptacle.

__ 6. On the tape control unit operator setup panel:

__ a. Set the UEPO switch 4 to Power Enable.

__ b. Press the Local Power Enable switch 5 to supply power to the tape control unit and its attached drives.

Is the DC Power light on the tape control unit operator setup panel 1 On?

```
YES NO
|   |
|   Is the Service switch on the 01A
|   gate in the TCU 9 set to On?
|
|   YES NO
|   |   |
|   |   Set the switch to On and press
|   |   the Local Power Enable switch 5.
|   |
|   |   Is the DC Power light on the TCU
|   |   operator setup panel 1 On?
|   |
|   |   YES NO
|   |   |   |
|   |   |   Go step 7 on this page.
|   |   |
|   |   Go step 15 on this page.
|   |
|   Go step 7 on this page.
|
Go step 15 on this page.
```

__ 7. Vibration or temperatures exceeding operating temperatures during shipping may trip the upper or lower thermal switches on the logic gate.

Set the UEPO switch 4 to Off.

__ 8. Loosen the two screws 10 on the top of the logic gate 7, and raise the top cover to gain access to the upper thermal switch 8.

__ 9. Press the reset button located on the upper thermal switch, then lower the top cover, and tighten the two top cover screws.

__ 10. Locate the lower thermal switch 11 on the bottom of the logic gate.

__ 11. Press the lower thermal switch reset button.

__ 12. Reset the upper and lower thermals in the STI gate (refer to LOC 45).

__ 13. Set the UEPO switch 4 to Power Enable.

__ 14. Press the Local Power Enable switch 5 to supply power to the tape control unit and its attached drives.

Is the DC Power light on the tape control unit operator setup panel 1 On?

```
YES NO
|   |
|   Go to MAP 0100-Power Start, on PWR
|   100, to repair the power failure;
|   then return to this page, INST 60,
|   step 2 and continue.
|
Continue with the next step.
```

Checking the Unit Emergency Power Off (UEPO) switch

__ 15. Set the tape control unit Power On/Off switch 3 to the Off position.

__ 16. Set the UEPO switch 4 to the Power Off position.

__ 17. Attempt to power on the tape control unit with the UEPO switch in the Power Off position, by doing the following:

__ a. Set the Power On/Off switch 3 to the On position.

__ b. Press the Local Power Enable switch 5.

Does the tape control unit power on with the UEPO switch in the Power Off position?

```
YES NO
|   |
|   Go to step 18 on this page.
|
There is a problem with the UEPO switch
(FRU198) or the ac power supply (FRU144).
Follow the instructions in the CARR-TCU
section of the Maintenance Guide
for the removal and replacement of those
FRUs.  Return here and repeat steps 14
through 16 after each FRU is replaced.

Does the tape control unit power on with the
UEPO switch in the Power Off position?

YES NO
|   |
|   Go to step 18 on this page.
|
Go to MAP 0100-Power Start, on PWR 100,
to repair the power failure; then return
here to complete the installation.
```

__ 18. Are you installing a single tape control unit subsystem?

```
YES NO
|   |
|   Are two FE's installing
|   this subsystem at the same time?
|
|   YES NO
|   |   |
|   |   Repeat steps 1 through 17 for
|   |   the second tape control unit, then
|   |   set the Power ON/OFF switch 3
|   |   to OFF on both tape control units
|   |   and go to INST 76.
|   |
|   Set Power ON/OFF switch 3 to OFF
|   and go to INST 76.
|
Set Power ON/OFF switch 3 to OFF
and go to INST 70.
```

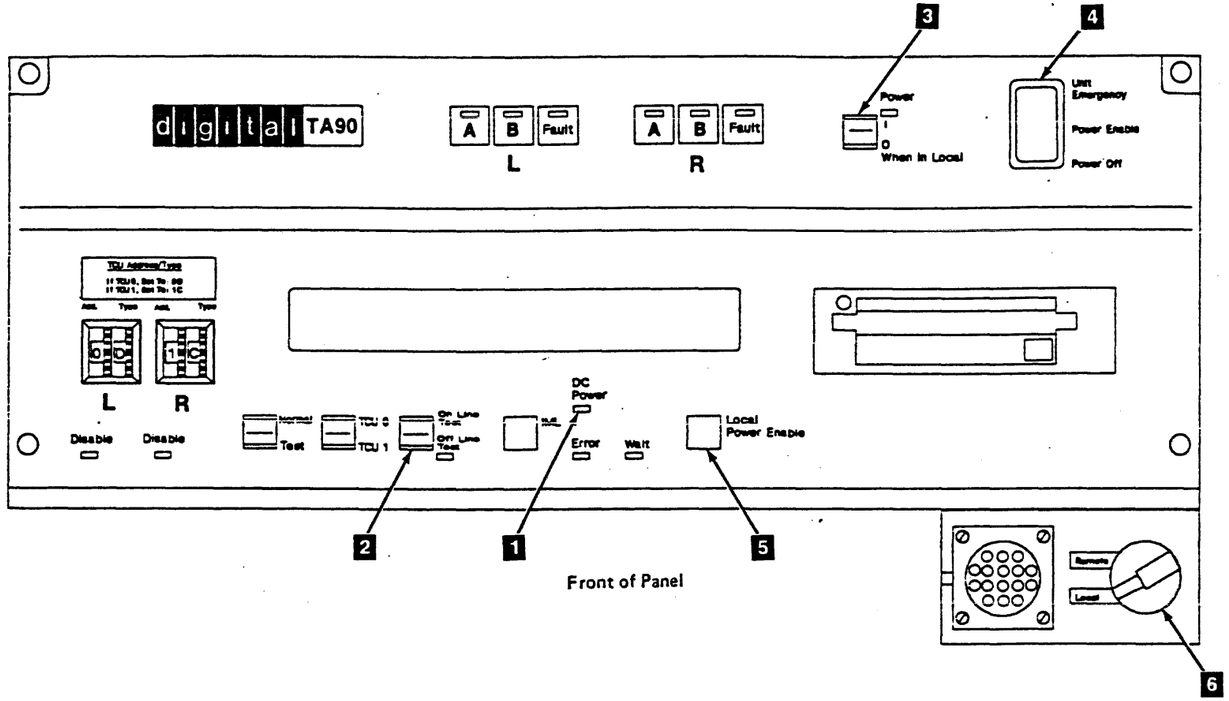

Front of Panel

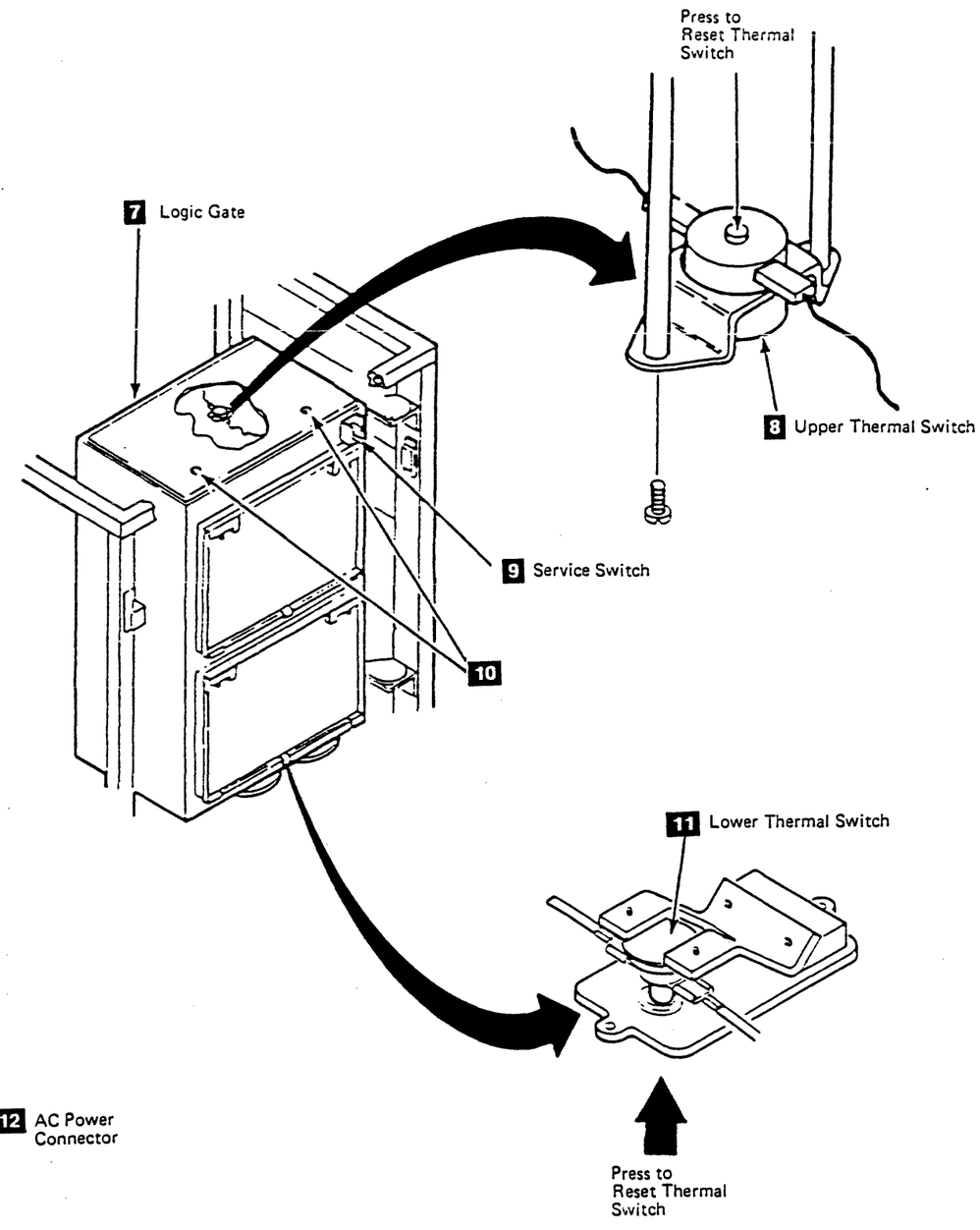

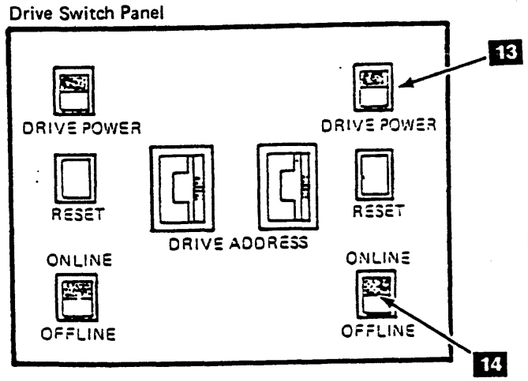

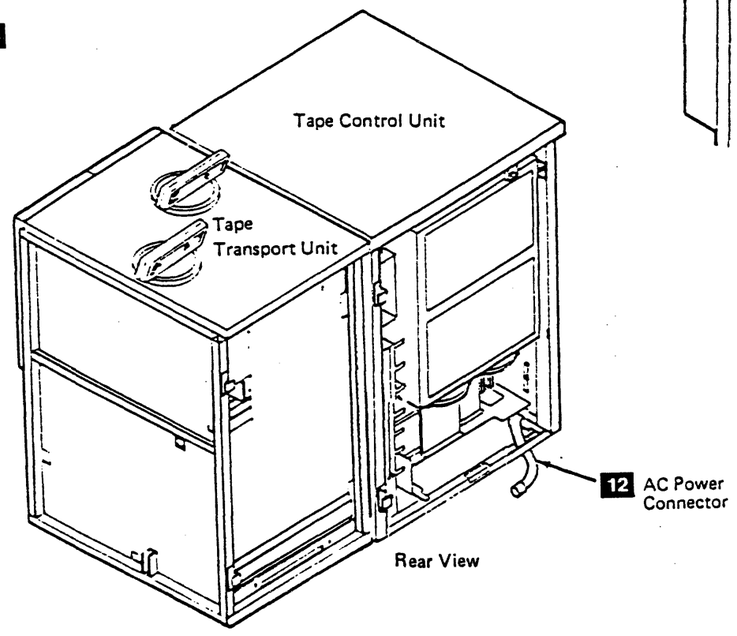

Rear View

Running Offline Checkout for a Single Tape Control Unit Subsystem

Note: See INST 71 for the physical locations.

This procedure is used for offline checkout of a single tape control unit subsystem only. Go to INST 76 if you have a dual tape control unit subsystem.

The offline checkout tests whether the tape control unit can communicate with all the drives in the subsystem.

As you progress through the tests, you are asked to note the address of any drive that does not show the display response expected. After the offline checkout is complete, you will be sent to INST 90 to analyze the drives that failed during the checkout.

The error light 3 will light when certain portions of the offline tests are run. This condition is normal and does not indicate a failure in the tape control unit unless you are asked to note the status of the error light.

Setting Up for the Checkout

Note: If you are adding a tape transport unit to a previously installed subsystem, do the following procedures testing only that tape transport unit you are adding.

__ 1. On the tape control unit operator setup panel:

- __ a. Verify that the Power On/Off switch 5 is set to Off.
- __ b. Set the Normal/Test switch 1 to Test.
- __ c. Verify that the TCU0/TCU1 switch 2 is set to TCU0. (Required for single tape control unit subsystems).
- __ d. Verify that the Online Test/Offline Test switch 4 is set to Offline Test.

__ 2. On each drive operator panel:

- __ a. Set the Ready/Not Ready switch 12 to Ready.

__ 3. On each drive switch panel:

- __ a. Verify that the Drive Power switch 9 is set to On.
- __ b. Verify that the Online/Offline switch 11 is set to Online.

__ 4. On each drive with the Automatic Cartridge Loader feature, set the Loader switch 13 to Auto.

__ 5. On the tape control unit:

- __ a. Push the release button on the IML disk drive 8 and remove the head protector.
- __ b. Insert the Functional diskette, making sure the diskette is not write-protected (the window is closed) before insertion.
- __ c. Set the Power On/Off switch 5 to On.

Switching on the Power

__ 6. Ensure that the main circuit breaker on the tape control unit (CB1 on the ac power supply) is off; then switch it on.

__ 7. Set Unit Emergency Power Off switch on the tape control unit 6 to Power Enable.

__ 8. Press the Local Power Enable pushbutton 7 on the tape control unit operator setup panel.

__ 9. Does a single asterisk (*) show for ten seconds or longer on each drive message display?

```
YES NO
|   |
|   Are all the switches set correctly?
|
|   YES NO
|   |   |
|   |   Switch off the mainline circuit
|   |   breaker (CB1 on the ac power
|   |   supply) and set the switches as
|   |   specified in steps 1, 2, and 3;
|   |   then perform steps 5 through 7.
|   |
|   |   Does a single asterisk show for
|   |   ten seconds or longer on each
|   |   drive message display?
|   |
|   |   YES NO
|   |   |   |
|   |   |   Note the drive addresses
|   |   |   without a single
|   |   |   asterisk and continue to
|   |   |   the next step.
|   |   |
|   |   Continue to the next step.
|   |
|   Note the drive addresses
|   without a single asterisk and
|   continue to the next step.
|
Continue to the next step.
```

__ 10. On each drive switch panel, set the Drive Power switch 9 to Off; then set it back to On.

Does a single asterisk (*) show for ten seconds or longer on each drive message display?

```
YES NO
|   |
|   Note the drive addresses without
|   a single asterisk and continue to
|   the next step.
|
Continue to the next step.
```

__ 11. On each drive switch panel, press then release the Reset switch 10.

Does a single asterisk (*) show for ten seconds or longer on each drive message display?

```
YES NO
|   |
|   Note the drive addresses
|   without a single asterisk and
|   continue to the next step.
|
Continue to the next step.
```

__ 12. On each drive switch panel, set the Online/Offline switch 11 to Offline.

Do special box-shaped symbols show in the first and last positions of the message display?

```
YES NO
|   |
|   Note the drive addresses
|   without the special box-shaped
|   symbols and continue to the next
|   step.
|
Continue to the next step.
```

__ 13. On the drive switch panel, set the Online/Offline switch 11 to Online and verify that the special box-shaped symbols go away.

Do the special box-shaped symbols go away?

```
YES NO
|   |
|   Note the drive addresses where the
|   special box-shaped symbols do not go
|   away, and continue with the next step.
|
Continue with the next step.
```

__ 14. Go to INST 72 to continue the offline checkout.

Installation Instructions INST 70

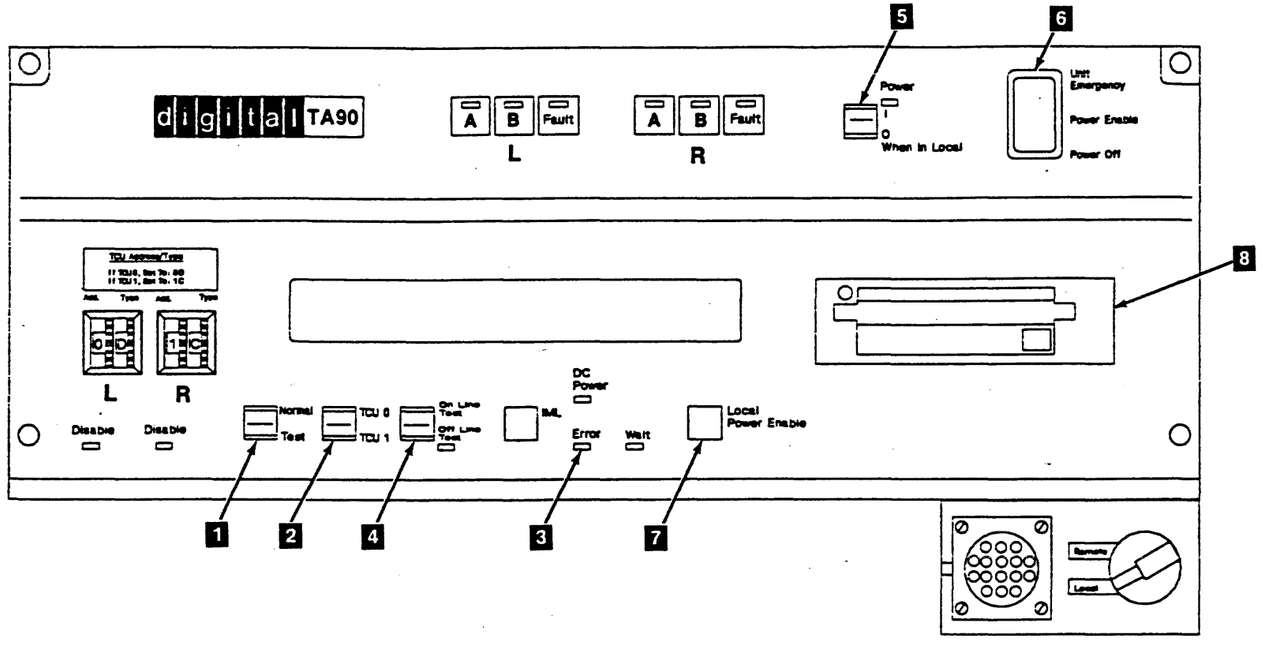

Automatic Cartridge Loader Operator Panel

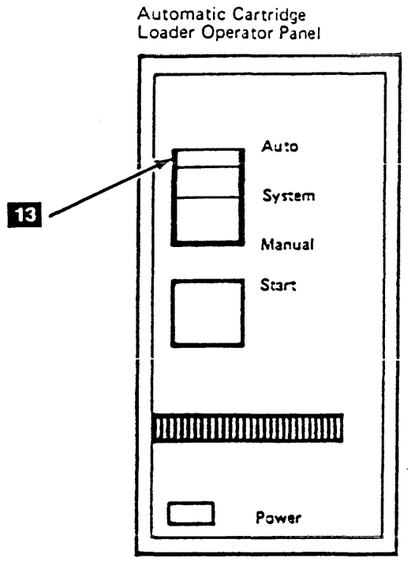

Drive Operator Panel

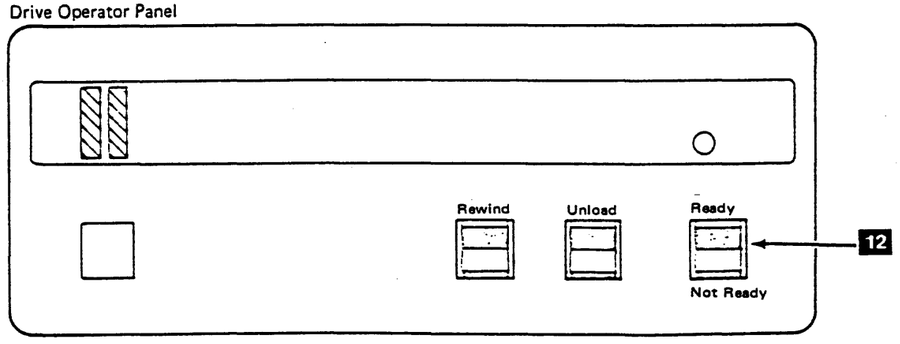

Drive Switch Panel

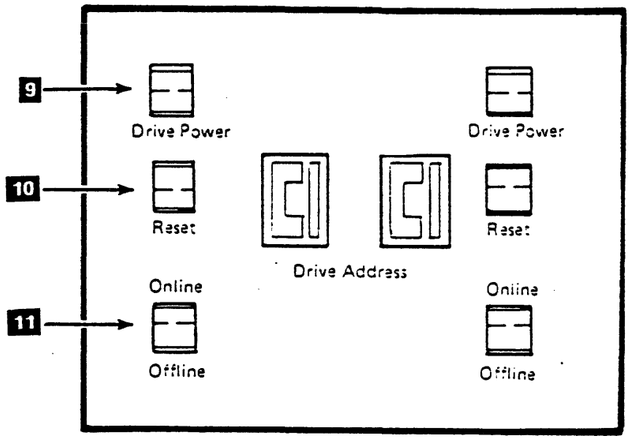

Running Offline Checkout for a Single Tape Control Unit Subsystem (Continued)

Note: See INST 73 for the following locations.

Checking the Addresses

__ 15. On the tape control unit operator setup panel, set the Online Test/Offline Test switch **2** to Online Test.

After a short delay (1 1/2 minutes or less) does "L=x P=x" (x being any number between 0 and 7) appear on any drive display?

```
YES NO
|   |
|   Power off the tape control unit with the
|   Power On/Off switch 4 and verify that
|   the switches are set correctly on the
|   tape control unit and tape transport unit panels.  See
|   "Setting Up for the Checkout" steps 1,
|   2, and 3 on INST 70 for the correct
|   switch settings.  Correct any switch
|   settings that are wrong.  Power up and
|   repeat the actions you performed in
|   step 14.
|
|   Does "L=x P=x" appear on any tape
|   drive display?
|
|   YES NO
|   |   |
|   |   The TCU will not load the micro-
|   |   program and must be fixed to
|   |   continue.  Set the Normal/Test
|   |   switch 1 to Normal and press
|   |   the IML switch 3.
|   |   Run GMP/TA90 Support Diagnostics to
|   |   isolate the problem and return
|   |   here when the problem is fixed.
|   |
|   |   Set the Normal/Test switch to Test
|   |   and check the TCU and tape transport unit
|   |   switch settings again.  See
|   |   "Setting Up for the Checkout" steps
|   |   1, 2, and 3 on INST 70 for the
|   |   correct switch settings.  Correct
|   |   any switch settings that are wrong.
|   |   Power up and repeat the actions
|   |   you performed in step 15.
|   |
|   |   Does "L=x P=x" appear on any tape
|   |   drive display?
|   |
|   |   YES NO
|   |   |   |
A   B   C   D
```

```
A   B   C   D
|   |   |   |
|   |   |   Go to EAD 1, Drive Interconnect
|   |   |   Problems, then return to step 15.
|   |   |
|   |   Note the addresses of any drives
|   |   that do not show the correct
|   |   display, then continue with the
|   |   next step.
|   |
|   Note the addresses of any drives that
|   do not show the correct display, then
|   continue with the next step.
|
Note the addresses of any drives that do
not show the correct display, then
continue with the next step.
```

__ 16. Compare the "L=x" (logical address) portion of each drive display to the address label **6** on each display.

```
Does each drive display match the label?

YES NO
|   |
|   Ensure that all the drive logical
|   addresses are set correctly.  See
|   "Setting the Drive Logical and
|   Physical Addresses" on INST 50.
|
|   Leaving the tape control unit online, power
|   it off then back on again.  Note the
|   addresses of any drives whose display
|   labels 6 still do not match the "L=x"
|   portion of the display, then continue
|   to the next step.
|
Ensure that the "P=x" (physical address)
portion of each display does not match the
"P=x" portion of any other drive display
in the subsystem.
```

Does each drive display have a "P=x" number not shared by any other drive?

```
YES NO
|   |
|   Ensure that all of the drive physical
|   addresses are set correctly.  See
|   "Setting the Drive Logical and
|    Physical Addresses" on INST 50.
|
|   Leaving the tape control unit online, power
|   it off then on again.  Note any drive
|   physical addresses that are still
|   incorrect and continue to the next step.
|
Continue with the next step.
```

Checking Read/Write

__ 17. On the tape control unit operator setup panel, set the Online Test/Offline Test switch **2** to Offline Test.

After a delay of 1 1/2 minutes or less, does TEST show with the indicator bars **5** flashing on the message display of any drive?

Note: If an Action message appears on any drive display, go to INST 5 and perform the action described for that message. Return here when finished, and set the Power On/Off switch **4** to Off then On and go to step 15 on this page.

```
YES NO
|   |
|   The TCU will not load the microprogram
|   and must be fixed to continue.  Set
|   the Normal/Test switch 1 to Normal
|   and press the IML switch 3.
|   Run GMP/TA90 Support Diagnostics to
|   isolate the problem and return here
|   when the problem is fixed.
|
|   Set the Normal/Test switch 1 to Test
|   and the Online Test/Offline Test switch
|   2 to Online Test.
|   Wait until addresses appear on
|   the drive displays, then repeat step 16
|   on this page.
|
Continue to the next step.
```

__ 18. Set a blank cartridge **7** to not file protect.

__ 19. If the Automatic Cartridge Loader feature is installed, skip the next step.

__ 20. Insert the cartridge into the drive that is nearest the tape control unit and displaying TEST. Close the cartridge latch and skip the next TWO steps.

__ 21. Put a cartridge in the top position of the loader on the drive nearest the tape control unit and displaying TEST.

__ 22. Ensure that the Loader mode switch **8** is set to Auto mode and press the Start switch **9**.

__ 23. If the display shows Action Message 1, 2, 3, or 5 after you load the tape cartridge, go to "Action Messages" on INST 5 and perform the procedure as directed. Return here when you have completed the required procedure.

__ 24. The diagnostic will show various messages on the drive display as it executes, indicating the action the drive is performing.

Each drive will require about 1 3/4 minutes to execute the test, and when complete, will show a single asterisk on the display.

__ 25. While the first drive is being tested, set another blank cartridge **7** to not file protect and insert it into the next drive displaying TEST. The display will show READY U.

When UNLOAD appears on the display of the first drive, the next drive with a tape loaded will begin testing.

Note: This testing procedure can be performed with one scratch tape, but you must wait for each drive to unload the tape. This increases the test time to 2 1/2 minutes for each drive.

__ 26. When the first drive UNLOADs, move that tape to the next drive showing TEST. If the cartridge does not unload, go to "Cartridge Removal by Hand" on CART 10.

__ 27. Repeat this procedure for all drives in the subsystem showing TEST.

__ 28. If failures occur on multiple drives in a string, there may be a cable connection problem. Check the seating of the device data and read bus cables, and the dual tape control unit communication cables (for dual control unit subsystems). See LOC 1 for the tape control unit and tape transport unit cable locations.

When you have finished checking the cables, insert a cartridge into those drives that were failing and rerun the tests.

__ 29. If any drives will not run the tests to completion, note the failing drive addresses and that TCU0 was running the test. This will be used later on INST 90 when the GMP diagnostics are run.

__ 30. Go to the next step on INST 74.

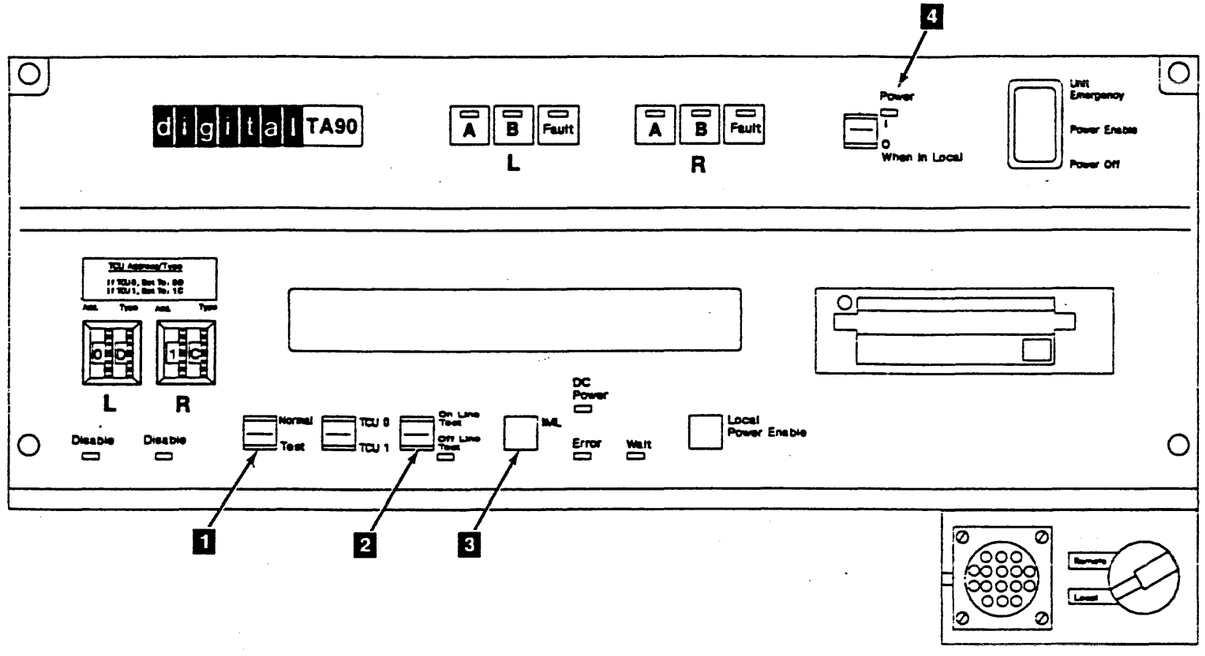

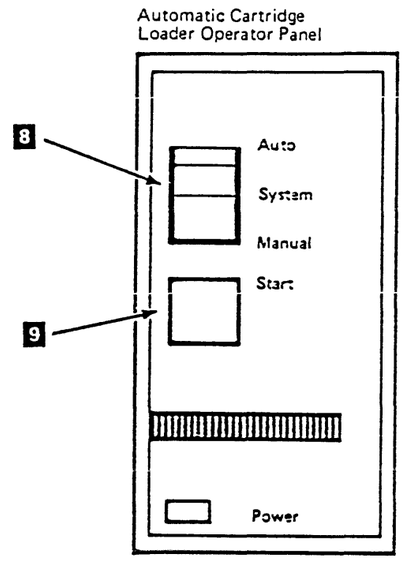

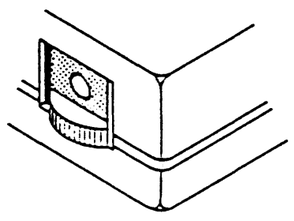

File Protect Position

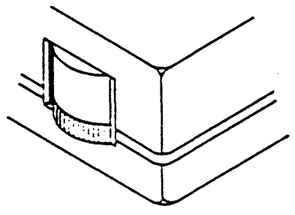

Not File Protect Position

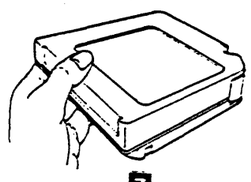

7

Blank Cartridge

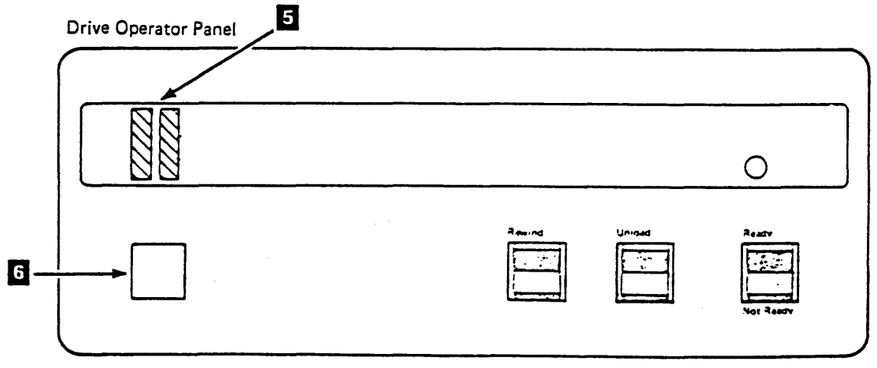

Running Offline Checkout for a Single Tape Control Unit Subsystem (Continued)

Final Checkout

__ 31. On the tape control unit operator setup panel, set the Normal/Test switch **1** to Normal.

Do eight asterisks (********) show on all drive displays not showing TEST?

```
YES NO
|   |
|   Is the Normal/Test switch 1 set
|   to Normal?
|
|   YES NO
|   |   |
|   |   Set the switch to Normal and
|   |   repeat step 26.
|   |
|   |   Do eight asterisks show on all
|   |   drive displays not showing TEST?
|   |
|   |   YES NO
|   |   |   |
|   |   |   Note the drive addresses
|   |   |   that do not show eight
|   |   |   asterisks or TEST and
|   |   |   continue to the next step.
|   |   |
|   |   Continue to the next step.
|   |
|   Note the drive addresses that do
|   not show eight asterisks or TEST
|   and continue to the next step.
|
Continue to the next step.
```

__ 32. Set the Online Test/Offline Test switch **3** to Online Test.

Checking the Initial Microprogram Load (IML)

__ 33. Ensure that the functional diskette is not write-protected (the window is closed).

__ 34. On the tape control unit operator setup panel, set the Power On/Off switch **6** to Off, then On.

After approximately 2 minutes the Wait light **4** on the tape control unit operator setup panel should be on solidly, and the Error light **2** should be off.

Are all the lights correct?

```
YES NO
|   |
|   The tape control unit will not load the micro-
|   program and must be fixed to continue.
|   Ensure the Normal/Test switch 1 is set
|   to Normal and the Online Test/Offline Test
|   switch 3 is on Online Test.
|   Press the IML switch 5.
|   Run GHP/TA90 Support Diagnostics to isolate
|   the problem, and return here when the
|   problem is fixed.
|
Go to INST 90, the Offline checkout is complete.
```

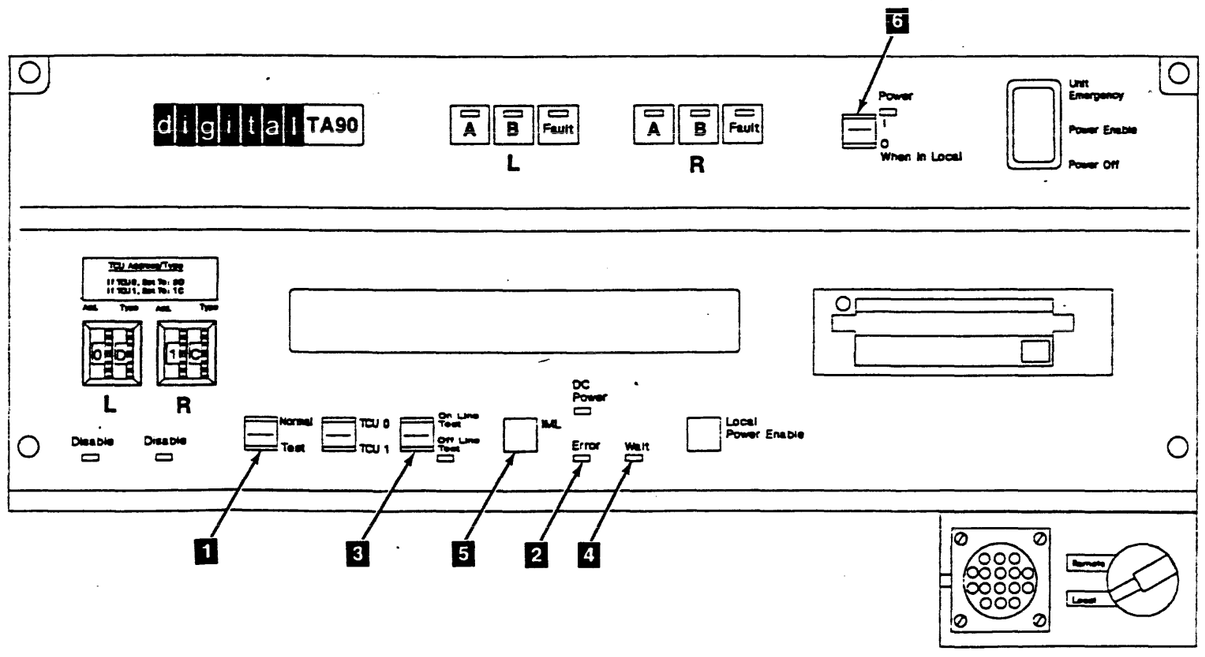

Running Offline Checkout for a Dual Tape Control Unit Subsystem

Note: See INST 77 for the physical locations.

This procedure is used for offline checkout of a dual tape control unit subsystem only. Go to INST 70 if you have a single tape control unit subsystem.

The offline checkout tests whether both tape control units can communicate with all the drives in the subsystem. Therefore, some steps in the following procedure appear to be repeated.

As you progress through the tests, you are asked to note the addresses of any drives without the display response expected. Also, you should note whether the drive failed during checkout from TCU0 or TCU1. After the offline checkout is complete, you will be sent to INST 90 to analyze any drives that failed during the checkout.

The error light 3 will light when certain portions of the offline tests are run. This condition is normal and does not indicate a failure in the tape control unit unless you are asked to note the status of the error light.

Setting Up for the Checkout

Note: The offline checkout should be performed by only one CE.

__ 1. On both tape control unit operator setup panels:

- __ a. Verify that the Power On/Off switch 5 is set to Off.
- __ b. Set the Normal/Test switch 1 to Test.
- __ c. Verify that the TCU0/TCU1 switch 2 is set to TCU0 on tape control unit 0 and is set to TCU1 on tape control unit 1.
- __ d. Verify that the Online Test/Offline Test switch 4 is set to Offline Test.

__ 2. On all drive operator panels:

- __ a. Set the Ready/Not Ready switches 12 to Ready.

__ 3. On all drive switch panels:

- __ a. Verify that the Drive Power switches 9 are set to On.
- __ b. Verify that the Online Test/Offline Test switches 11 are set to Offline Test.

__ 4. On each drive with the Automatic Cartridge Loader feature, set the Loader switch 13 to Auto.

__ 5. On both tape control units:

- __ a. Push the release button on the IML disk drive 8 and remove the head protector.
- __ b. Insert the Functional diskette , making sure the diskette is not write-protected (the window is closed) before insertion. .
- __ c. Set the Power On/Off switch 5 to On.

Switching on the Power

__ 6. Ensure that the main circuit breaker on the TCU (CB1 on the ac power supply) is off; then switch it On.

__ 7. On both tape control units, set the Unit Emergency Power switch 6 to Power Enable.

__ 8. Press the Local Power Enable pushbutton 7 on both tape control units.

__ 9. Does a single asterisk (*) show for ten seconds or longer on each drive display?

```
YES NO
 |  |
 |  Are all the switches set correctly?
 |
 |  YES NO
 |   |  |
 |   |  Switch off the mainline circuit
 |   |  breaker (CB1 on the ac power
 |   |  supply) and set the switches as
 |   |  specified in steps 1, 2, and 3;
 |   |  then perform steps 5 through 7.
 |   |
 |   |  Does a single asterisk show for
 |   |  ten seconds or longer on each
 |   |  drive display?
 |   |
 |   |  YES NO
 |   |   |  |
 |   |   |  Note the drive addresses of
 |   |   |  the drives without a
 |   |   |  single asterisk, and which TCU
 |   |   |  those drives are attached to,
 |   |   |  and continue to the next step.
 |   |   |
 |   |   Continue to the next step.
 |   |
 |   Note the drive addresses of the
 |   drives without a single
 |   asterisk, and which TCU those drives
 |   are attached to, and continue to
 |   the next step.
 |
Continue to the next step.
```

__ 10. On each drive switch panel, set the Drive Power switch 9 to Off; then set it back to On.

Does a single asterisk (*) show for ten seconds or longer on each drive display?

```
YES NO
 |  |
 |  Note the drive addresses of the
 |  drives without a single
 |  asterisk, and which TCU those drives
 |  are attached to, and continue to the
 |  next step.
 |
Continue to the next step.
```

__ 11. On each drive switch panel, press then release the drive Reset switch 10.

Does a single asterisk (*) show for ten seconds or longer on each drive display?

```
YES NO
 |  |
 |  Note the drive addresses of the
 |  drives without a single
 |  asterisk, and which TCU those drives
 |  are attached to, and continue to the
 |  next step.
 |
Continue to the next step.
```


__ 12. On each drive switch panel, set the Online/Offline switch 11 to Offline.

Do special box-shaped symbols show in the first and last positions of the message display?

```
YES NO
 |  |
 |  Note the drive addresses of the drives
 |  without the special box-shaped
 |  symbols and which TCU those drives are
 |  attached to, and continue to the next
 |  step.
 |
Continue to the next step.
```

__ 13. On each drive switch panel, set the Online/Offline switch 11 to Online and verify that the special box-shaped symbols go away.

Do the special box-shaped symbols go away?

```
YES NO
 |  |
 |  Note the drive addresses of the drives
 |  where the special box-shaped symbols
 |  do not go away, and which TCU those
 |  drives are attached to; then continue
 |  to the next step.
 |
Continue with the next step.
```

__ 14. Go to INST 78 to continue the offline checkout.

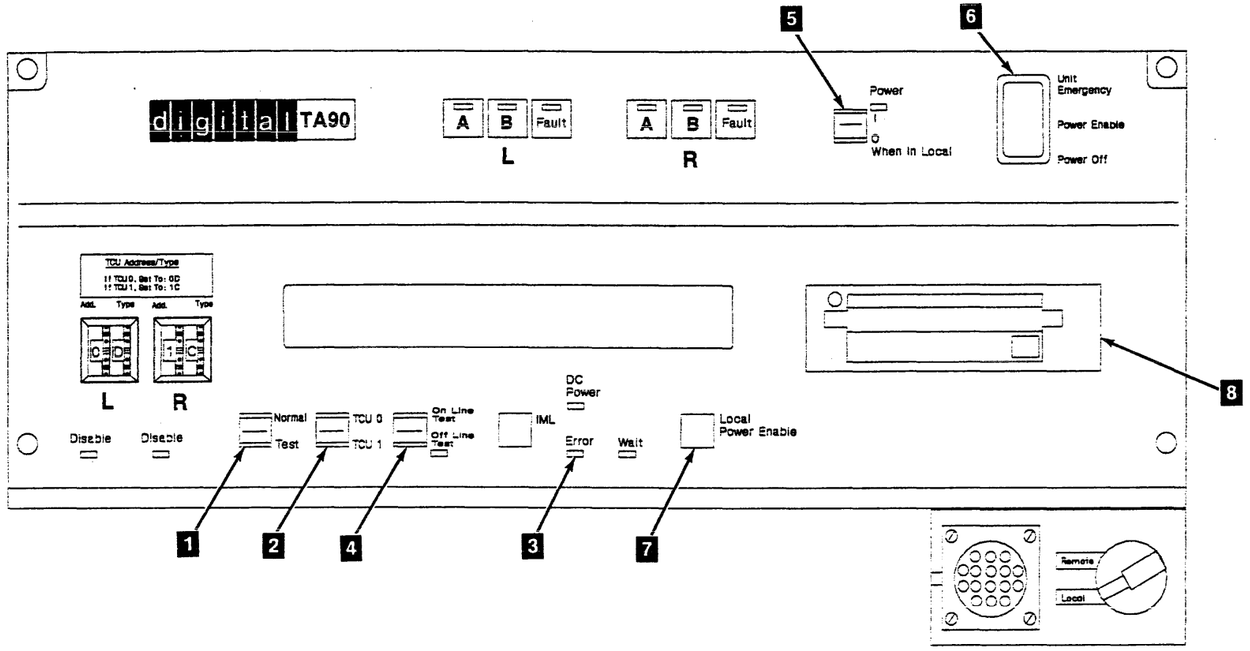

Automatic Cartridge Loader Operator Panel

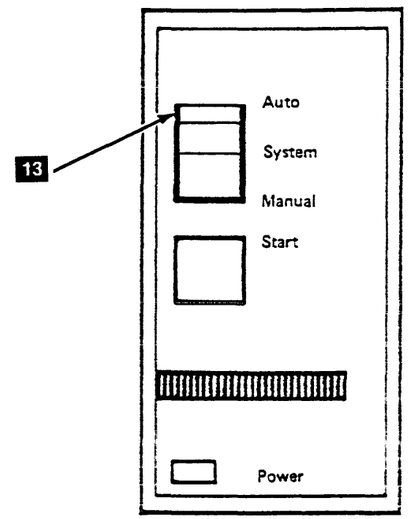

Drive Operator Panel

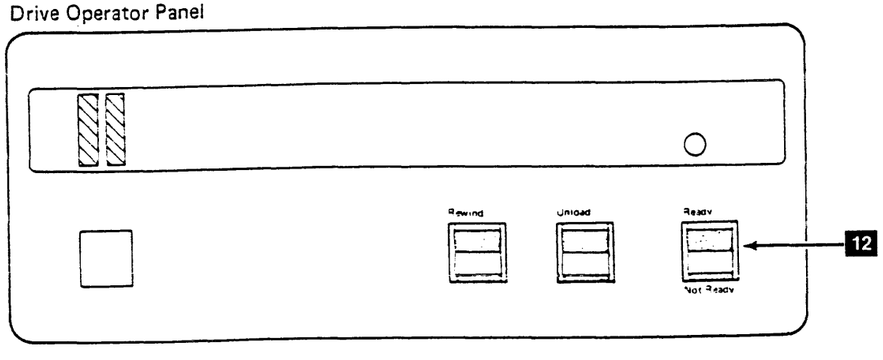

Drive Switch Panel

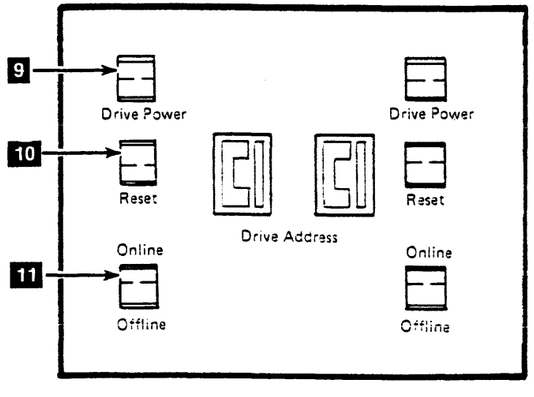

Running Offline Checkout for a Dual Tape Control Unit Subsystem (Continued)

Note: See INST 79 for the following locations.

Checking the Addresses, Tape Control Unit 0

__ 15. On the TCU0 operator setup panel, set the Online Test/Offline Test switch **2** to Online Test.

After a short delay (2 1/2 seconds or less) does "L=x P=x" (x being any number between 0 and F) appear on any drive display?

```
YES NO
|  |
|  Power off the tape control unit with the Power
|  On/Off switch 4 and verify that the
|  switches are set correctly on the tape control
|  unit and tape transport unit panels. See "Setting Up
|  for the Checkout" steps 1, 2, and 3 on INST
|  76 for the correct switch settings. Correct
|  any switch settings that are wrong. Power
|  up and repeat the actions you performed in
|  step 14.
|
|  Does "L=x P=x" appear on any tape drive
|  display?
|
|  YES NO
|  |  |
|  |  The TCU will not load the microprogram
|  |  and must be fixed to continue. Set the
|  |  Normal/Test switch 1 to Normal and
|  |  press the IML switch 3.
|  |  Run GMP/TA90 Support Diagnostics to isolate the
|  |  problem and return here when the problem
|  |  is fixed.
|  |
|  |  Set the Normal/Test switch to Test and
|  |  check the TCU and tape transport unit switch
|  |  settings again. See "Setting up for
|  |  the Checkout" steps 1, 2, and 3 on
|  |  INST 76 for the correct switch
|  |  settings. Correct any switch settings
|  |  that are wrong. Power up and repeat
|  |  the actions you performed in step 15.
|  |
|  |  Does "L=x P=x" appear on any tape
|  |  drive display?
|  |
|  |  YES NO
|  |  |  |
|  |  |  Go to EAD 1, Drive Interconnect
|  |  |  Problems, then return to step 15.
|  |  |
|  |  Note the addresses of any drives that do
|  |  show correct display, then continue with
|  |  the next step.
|  |
A  B
```

```
A  B
|  |
|  Note the addresses of any drives that
|  do not show the correct display, then
|  continue with the next step.
|
Note the addresses of any drives that do
not show the correct display, then continue
with the next step.
```

__ 16. Compare the "L=x" (logical address) portion of each drive display to the address label **6** on each display.

Does each drive display match the label?

```
YES NO
|  |
|  Ensure that all the drive logical
|  addresses are set correctly. See
|  "Setting the Drive Logical and
|  Physical Addresses" on INST 50.
|
|  Leaving the tape control unit online, power
|  it off then back on again. Note the
|  addresses of any drives whose display
|  labels 6 still do not match the "L=x"
|  portion of the display, then continue
|  to the next step.
|
Ensure that the "P=x" (physical address)
portion of each display does not match the
"P=x" portion of any other drive display
in the subsystem.
```

Does each drive display have a "P=x" number not shared by any other drive in the subsystem?

```
YES NO
|  |
|  Ensure that all of the drive physical
|  addresses are set correctly. See
|  "Setting the Drive Logical and
|  Physical Addresses" on INST 50.
|
|  Leaving the tape control unit online, power
|  it off then on again. Note any drive
|  physical addresses that are still
|  incorrect and continue to the next step.
|
Continue with the next step.
```

Checking Read/Write, Tape Control Unit 0

__ 17. On the tape control unit (TCU0) operator setup panel, set the Online Test/Offline Test switch **2** to Offline Test.

After a delay of 1 1/2 minutes or less, does TEST show with the indicator bars **5** flashing on the message display of any drive?

Note: If an Action message appears on any display, go to INST 5 and perform the action described. Return here, set the Power On/Off switch **4** to Off then On and go to step 15 on this page.

```
YES NO
|  |
|  The TCU will not load the microprogram
|  and must be fixed to continue. Set the
|  Normal/Test switch 1 to Normal and
|  press the IML switch 3.
|  Run GMP/TA90 Support Diagnostics to isolate the
|  problem and return here when the problem
|  is fixed.
|
|  Set the Normal/Test switch 1 to Test
|  and the Online/Offline switch 2 to
|  Online. Wait until addresses appear on
|  the drive displays, then repeat step 17
|  on this page.
|
Continue to the next step.
```

__ 18. Set a blank cartridge **7** to not file protect.

__ 19. If the Automatic Cartridge Loader feature is installed, skip the next step.

__ 20. Insert the cartridge into the drive that is nearest the tape control unit and displaying TEST. Close the cartridge latch and skip the next TWO steps.

__ 21. Put a cartridge in the top position of the loader on the drive that is nearest the tape control unit and displaying TEST.

__ 22. Ensure that the Loader mode switch **8** is set to Auto mode and press the Start switch **9**.

__ 23. If the display shows Action Message 1, 2, 3, or 5 after you load the tape cartridge, go to "Action Messages" on INST 5 and perform the procedure as directed. Return here when you have completed the required procedure.

__ 24. The diagnostic will show various messages on the drive display as it executes, indicating the action the drive is performing.

Each drive will require about 1 3/4 minutes to execute the test, and when complete, will show a single asterisk on the display.

__ 25. While the first drive is being tested, set another blank cartridge **7** to not file protect and insert it into the next drive displaying TEST. The display will show READY U.

When UNLOAD appears on the display of the first drive, the next drive with a tape loaded will begin testing.

Note: This testing procedure can be performed with one scratch tape, but you must wait for each drive to unload the tape. This increases the test time to 2 1/2 minutes for each drive.

__ 26. When the first drive UNLOADs, move that tape to the next drive showing TEST. If the cartridge does not unload, go to "Cartridge Removal by Hand" on CART 10.

__ 27. Repeat this procedure for all drives in the subsystem showing TEST.

__ 28. If failures occur on multiple drives in a string, there may be a cable or terminator connection problem. Check the seating of the device data and read bus cables, and the dual tape control unit communication cables (for dual control unit subsystems). See LOC 1 for the tape control unit and tape transport unit cable locations.

When you have finished checking the cables, insert a cartridge into those drives that were failing and rerun the tests.

__ 29. If any drives will not run the tests to completion, note the failing drive addresses and that TCU0 was running the test. This will be used later in INST 90 when the GMP diagnostics are run.

__ 30. Go to the next step on INST 81.

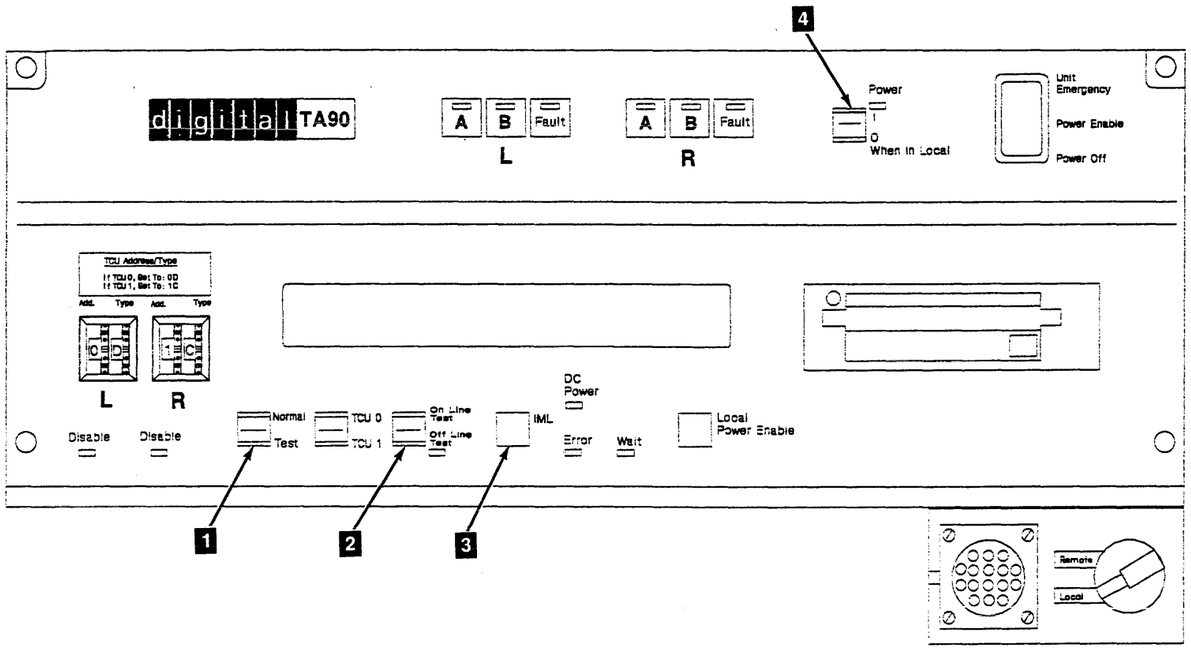

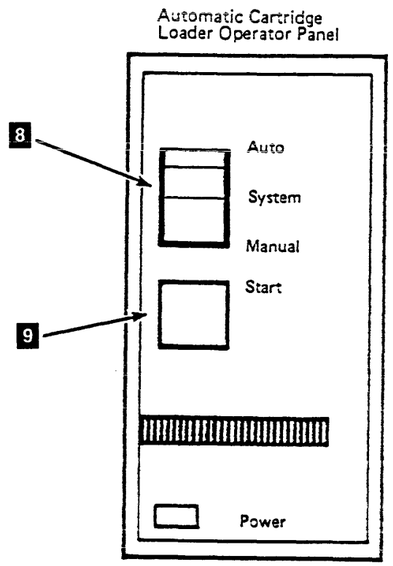

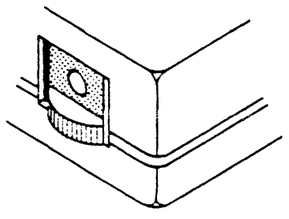

File Protect Position

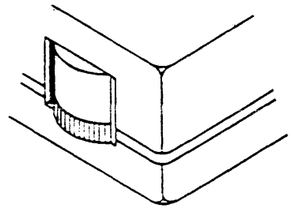

Not File Protect Position

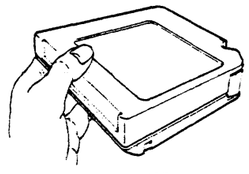

Blank Cartridge 7

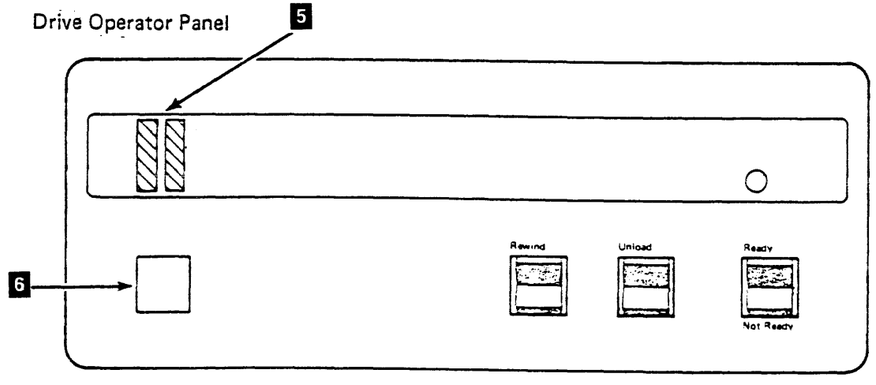

Running Offline Checkout for a Dual Tape Control Unit Subsystem (Continued)

Note: See INST 82 for the following locations.

Final Checkout of Tape Control Unit 0

__ 31. On the TCU0 operator setup panel, set the Normal/Test switch **1** to Normal.

Do eight asterisks (********) show on all drive displays not showing TEST?

```
YES NO
|  |
|  Is the Normal/Test switch 1 set to Normal?
|
|  YES NO
|  |  |
|  |  Set the switch to Normal and repeat step 31.
|  |
|  |  Do eight asterisks show on all drive displays
|  |  not showing TEST?
|  |
|  |  YES NO
|  |  |  |
|  |  |  Note the drive addresses that do not show
|  |  |  eight asterisks or TEST and continue to
|  |  |  the next step.
|  |  |
|  |  Continue to the next step.
|  |
|  Note the drive addresses that do not show eight
|  asterisks or TEST and continue to the next step.
|
Continue to the next step.
```

You have completed the checkout of TCU0 and the drives attached to both tape control units. If the tests worked correctly, you know that TCU0 can communicate with all the drives.

You must now check out TCU1 and all the drives again to be sure that TCU1 can communicate with all the drives.

Go to the next step to test TCU1.

Note: Do not change the switch settings or power off TCU0 during the following checkout of TCU1.

Checking the Addresses, Tape Control Unit 1

__ 32. On the TCU1 operator setup panel, set the Online Test/Offline Test switch **2** to Online Test.

After a short delay (2 1/2 minutes or less) does "L=x P=x" (x being any number between 0 and F) appear on any drive display?

```
YES NO
|  |
|  Power off the tape control unit and verify that
|  the tape control unit and tape transport unit switches (for
|  TCU1 and the drives physically attached to
|  TCU1) are set correctly.  See "Setting Up for
|  the Checkout" steps 1, 2, and 3 on INST 76
|  for the correct switch settings.  Correct
|  any switch settings that are wrong.  Power
|  up and repeat the actions you performed in
|  step 32.
|
|  Does "L=x P=x" appear on any tape drive
|  display?
|
|  YES NO
|  |  |
|  |  The TCU will not load the microprogram
|  |  and must be fixed to continue.  Set the
|  |  Normal Test switch 1 to Normal and
|  |  press the IML switch 3.
|  |  Run GMP/TA90 Support Diagnostics to isolate the
|  |  problem and return here when the problem
|  |  is fixed.
|  |
|  |  Set the Normal/Test switch to Test and
|  |  check the TCU and tape transport unit switch
|  |  settings again.  See "Setting Up for the
|  |  Checkout" steps 1, 2, and 3 on INST 76
|  |  for the correct switch settings.  Correct
|  |  any switch settings that are wrong. Power
|  |  up and repeat the actions you performed
|  |  in step 32.
|  |
|  |  Does "L=x P=x" appear on any tape
|  |  drive display?
|  |
|  |  YES NO
|  |  |  |
|  |  |  Go to EAD 1, Drive Interconnect
|  |  |  Problems, then return to step 32.
|  |  |
|  |  Note the addresses of any drives that
|  |  do not show the correct display, then
|  |  continue with the next step.
|  |
|  Note the addresses of any drives that do not
|  show the correct display, then continue with
|  the next step.
|
Note the addresses of any drives that do not
show the correct display, then continue with
the next step.
```

__ 33. Compare the "L=x" (logical address) portion of each drive display to the address label **4** on each display.

Does each drive display match the label?

```
YES NO
|  |
|  There is a cable connection problem.
|  Power off TCU1 and check the seating
|  of the device data and read bus
|  cables and the dual tape control unit
|  communication cables.  See LOC 1 for
|  the tape control unit and tape transport unit cable
|  locations.
|
|    NOTE:  Do not change any of the TCU
|    switch settings while checking out
|    the cable connection problem except
|    for the Power On/Off switch.
|
|  When you have finished checking the
|  cables, power on the tape control unit.
|  After a delay of 2 1/2 minutes or less,
|  compare the "L=x" portion of each drive
|  display to the address label 4 on the
|  drive.
|
|  Does each drive display match the label?
|
|  YES NO
|  |  |
|  |  Go to EAD 1, Drive Interconnect
|  |  Problems, then return to step 33.
|  |
|  Ensure that the "P=x" (physical address)
|  portion of each display does not match
|  the "P=x" portion of any other drive
|  display in the subsystem.
|
|  Does each drive display have a "P=x"
|  number not shared by any other drive?
|
|  YES NO
|  |  |
|  |  There is a cable connection problem.
|  |  Power off TCU1 and check the seating
|  |  of the device data and read bus cables,
|  |  and the dual tape control unit communication
|  |  cables.  See LOC 1 for the tape control unit
|  |  and tape transport unit cable locations.
|  |
|  |   NOTE:  Do not change any of the TCU
|  |   switch settings while checking the
|  |   cable connection problem, except
|  |   for the Power On/Off switch.
|  |
|  |  When you have finished checking the
|  |  cables, power on the TCU.  After a
|  |  delay of 2 1/2  minutes or less,
|  |  compare the "P=x" portion of each
|  |  drive display to the "P=x" portion
|  |  of all the other drive displays.
|  |
|  |  Does each drive have a "P=x" number
|  |  not shared by any other drive?
|  |
|  |  YES NO
|  |  |  |
A  B  C  D
```

```
A  B  C  D
|  |  |  |
|  |  |  Go to EAD 1, Drive Interconnect
|  |  |  Problems, then return to step 33.
|  |  |
|  |  Go to the next step on INST 83.
|  |
|  Go to the next step on INST 83.
|
Ensure that the "P=x" (physical address)
portion of each display does not match the
"P=x" portion of any other drive display
in the subsystem.

Does each drive display have a "P=x" number not
shared by any other drive?

YES NO
|  |
|  If this drive failed during the check-
|  out of TCU0, note that it also failed on
|  on TCU1 and go to the next step on INST 83.
|  If it did not fail during the checkout of
|  TCU0, continue with this step.
|
|  There is a cable connection problem.
|  Power off TCU1 and check the seating of
|  the device data and read bus cables
|  and the dual tape control unit communication
|  cables.  See LOC 1 for the tape control unit
|  and tape transport unit cable locations.
|
|    NOTE:  Do not change any of the TCU
|    switch settings while checking out
|    the cable connection problem, except
|    for the Power On/Off switch.
|
|  When you have finished checking the
|  cables, power on the TCU.  After a
|  delay of 2 1/2 minutes or less, compare
|  the "P=x" portion of each drive display
|  to the "P=x" portion of all the other
|  drive displays.
|
|  Does each drive have a "P=x" number
|  not shared by any other drive?
|
|  YES NO
|  |  |
|  |  Call the next level of support.
|  |
|  Go to the next step on INST 83.
|
Go to the next step on INST 83.
```

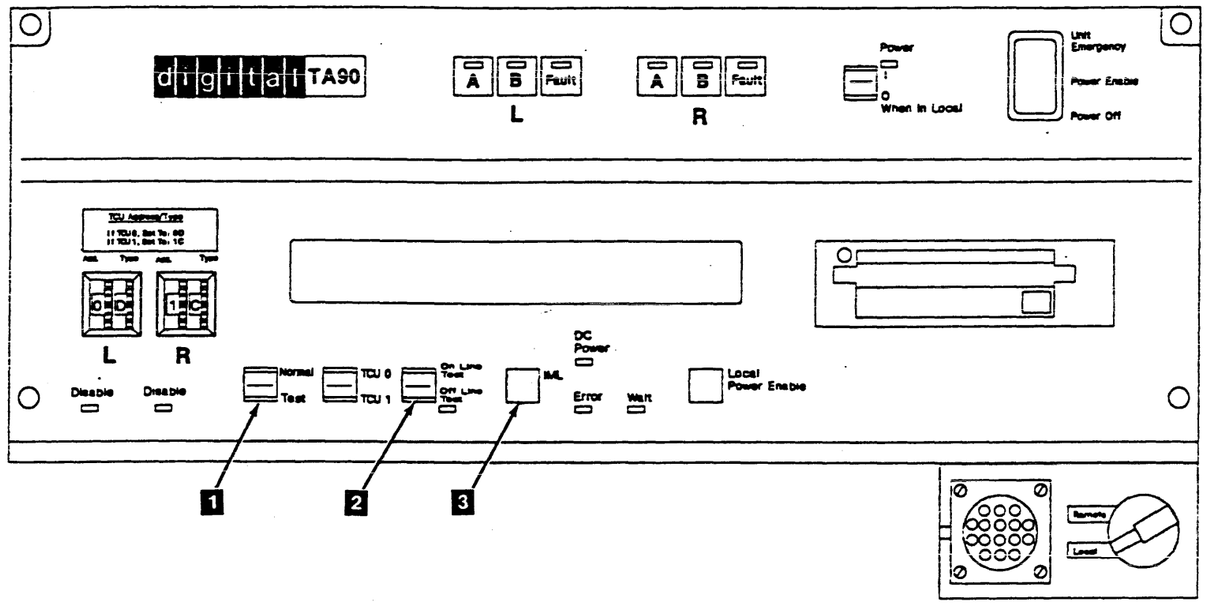

Drive Operator Panel

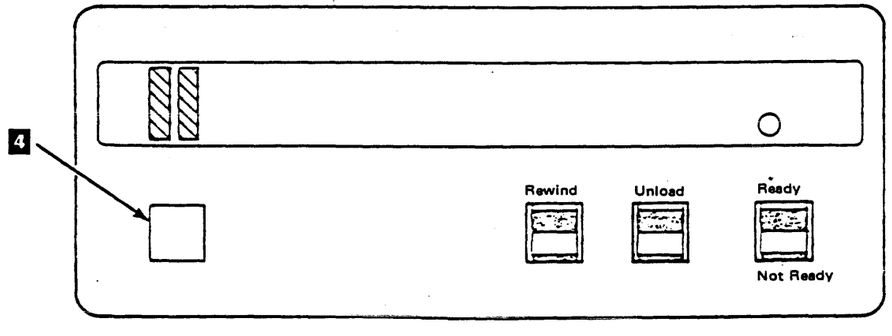

Running Offline Checkout for a Dual Tape Control Unit Subsystem (Continued)

Note: See INST 84 for the following locations.

Checking Read/Write, Tape Control Unit 1

__ 34. On the tape control unit (TCU1) operator setup panel, set the Online Test/Offline Test switch 3 to Offline Test.

Does TEST show with the indicator bars 8 flashing on the message display of any drive?

Note: If an Action message appears on any display, go to INST 5 and perform the action described. Return here and set the Power On/Off switch 6 to Off then On; then go to INST 81, step 32, and continue.

```
YES NO
|   |
|   The TCU will not load the microprogram
|   and must be fixed to continue.  Set
|   the Normal/Test switch 1 to Normal
|   and press the IML switch 5.
|   Run GMP/TA90 Support Diagnostics to
|   isolate the problem and return here
|   when the problem is fixed.
|
|   Set the Normal/Test switch 1 to Test
|   and the Online Test/Offline Test
|   switch 3 to Online Test.
|   Wait until addresses appear on
|   the drive displays, then repeat step 34
|   on this page.
|
Continue to the next step.
```

__ 35. Set a blank cartridge 7 to not file protect.

__ 36. If the Automatic Cartridge Loader feature is installed, skip the next step.

__ 37. Insert the cartridge into the drive that is nearest the tape control unit and displaying TEST. Close the cartridge latch and skip the next TWO steps.

__ 38. Put a cartridge in the top position of the loader on the drive that is nearest the tape control unit and displaying TEST.

__ 39. Ensure that the Loader mode switch 9 is set to Auto mode and press the Start switch 10.

__ 40. If the display shows Action Message 1, 2, 3, or 5 after you load the tape cartridge, go to "Action Messages" on INST 5 and perform the procedure as directed. Return here when you have completed the required procedure.

__ 41. The diagnostic will show various messages on the drive display as it executes, indicating the action the drive is performing.

Each drive will require about 1 3/4 minutes to execute the test, and when complete, will show a single asterisk on the display.

__ 42. While the first drive is being tested, set another blank cartridge 7 to not file protect and insert it into the next drive displaying TEST. The display will show READY U.

When UNLOAD appears on the display of the first drive, the next drive with a tape loaded will begin testing.

Note: This testing procedure can be performed with one scratch tape, but you must wait for each drive to unload the tape. This increases the test time to 2 1/2 minutes for each drive.

__ 43. When the first drive UNLOADs, move that tape to the next drive showing TEST. If the cartridge does not unload, go to "Cartridge Removal by Hand" on CART 10.

__ 44. Repeat this procedure for all drives in the subsystem showing TEST.

__ 45. If failures occur on multiple drives in a string, there may be a cable connection problem. Check the seating of the device data and read bus cables, and the dual tape control unit communication cables (for dual control unit subsystems). See LOC 1 for the tape control unit and tape transport unit cable locations.

When you have finished checking the cables, insert a cartridge into those drives that were failing and rerun the tests.

__ 46. If any drives will not run the tests to completion, note the failing drive addresses and that TCU1 was running the test. This will be used later on in INST 90 when GMP is run.

__ 47. Go to the next step and continue.

Final Checkout of Tape Control Unit 1

__ 48. Set the Normal/Test switch 1 to Normal on the TCU1 tape control unit operator setup panel.

Do eight asterisks (********) show on all drive displays not showing TEST?

```
YES NO
|   |
|   Is the Normal/Test switch 1 set
|   to Normal?
|
|   YES NO
|   |   |
|   |   Repeat step 39.
|   |
|   |   Do eight asterisks show on all
|   |   drive displays not showing TEST?
|   |
|   |   YES NO
|   |   |   |
|   |   |   Note the drive addresses
|   |   |   that do not show eight
|   |   |   asterisks or TEST and
|   |   |   continue to the next step.
|   |   |
|   |   Continue to the next step.
|   |
|   Note the drive addresses that do
|   not show eight asterisks or TEST
|   and continue to the next step.
|
Continue to the next step.
```

__ 49. Set the Online Test/Offline Test switch to Online Test.

Checking the Initial Microprogram Load (IML)

__ 50. Ensure that the IML diskettes in TCU0 and TCU1 are at the same, or equivalent, microcode level; and that the diskette is not write-protected (the window is closed). If not, you will get an error light when you attempt an IML.

Note: See the labels on the IML diskettes.

On both TCU0 and TCU1, set the Power On/Off switch 6 to Off, then On.

After approximately 2 minutes the Wait light 4 on the tape control unit operator setup panel should be on solidly, and the Error light 2 should be off.

Are all the lights correct?

```
YES NO
|   |
|   The tape control unit will not load the micro-
|   program and must be fixed to continue.
|   Ensure the Normal Test switch 1 is set
|   to Normal and the Online Test/Offline Test
|   switch 3 is set to Online Test.
|   Run GMP/TA90 Support Diagnostics to isolate
|   the problem, and return to this page and
|   repeat step 40 when the problem is fixed.
|
Go to INST 90; the Offline checkout is
complete.
```

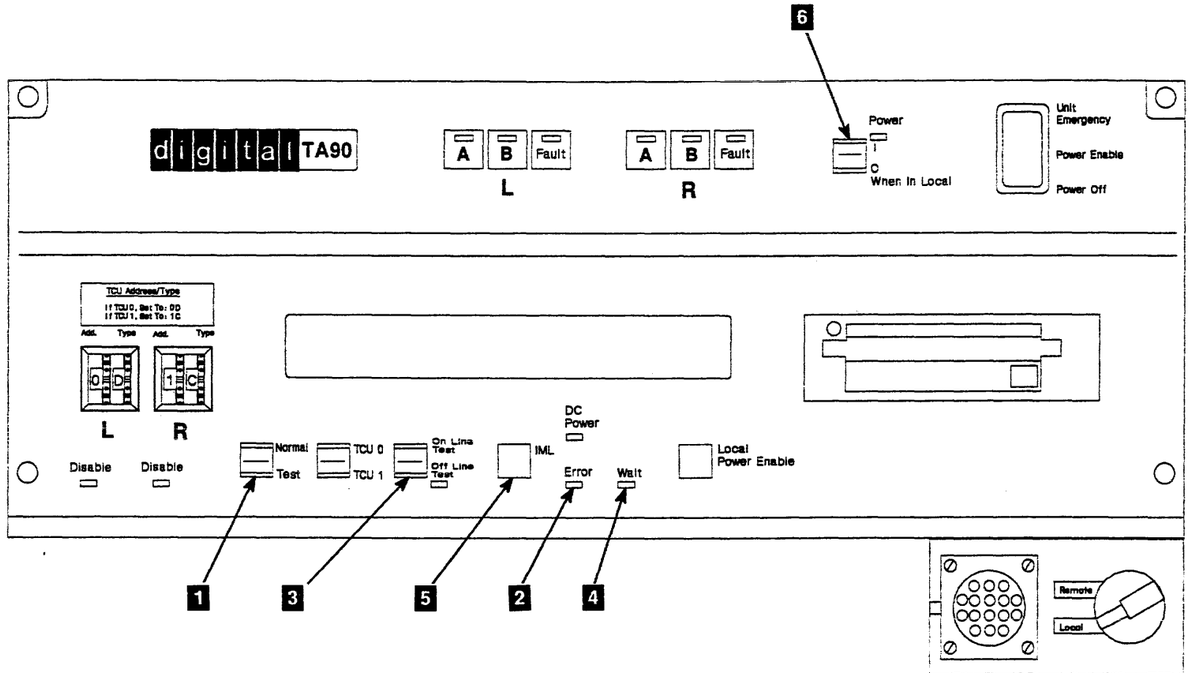
6
digital TA90
A
B
Fault
L
A
B
Fault
R
Power
I
O
When In Local
Unit Emergency
Power Enable
Power Off
TCU Address/Type
If TCU0, Set To: 0D
If TCU1, Set To: 1C
Add.
Type
Add.
Type
L
R
Disable
Disable
Normal
Test
TCU 0
TCU 1
On Line Test
Off Line Test
IML
DC Power
Error
Wait
Local Power Enable
1
3
5
2
4
Remote
Local

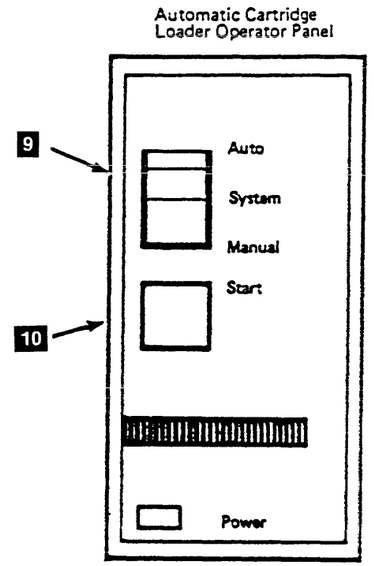
Automatic Cartridge Loader Operator Panel
9
10
Auto
System
Manual
Start
Power

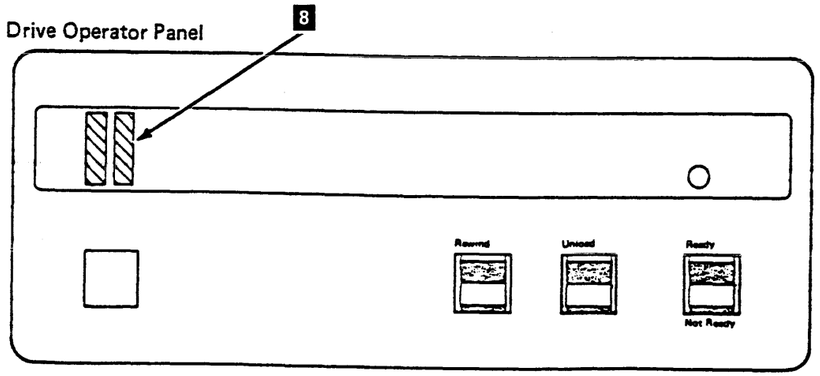
Drive Operator Panel
8
Rewind
Unload
Ready
Not Ready

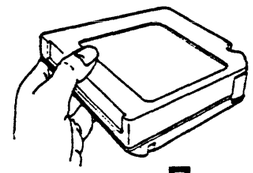
7
Blank Cartridge

Failing Drives

Run GMP (see CE/HSC) on any drives that failed during this installation.

Setting Drive Base Address

___ 1. From the customer, find out what the drive base address should be.

Note: No two drives in a cluster can have the same address. On a dual TCU configuration the base address should be a minimum of eight units apart. This will inhibit the overlapping of drive addresses when using the TA90 support diskette.

___ 2. Set the STI drive base address of the subsystem (see CE/HSC).

Note: Requestors for the TA90 must be in the highest priority slots of the HSC.

Installing STI Cables

Install the STI cables 1.

Running GMP on the Last Drive

Run GMP on the last drive of each string in this installation.

Go to INST 120 to continue.

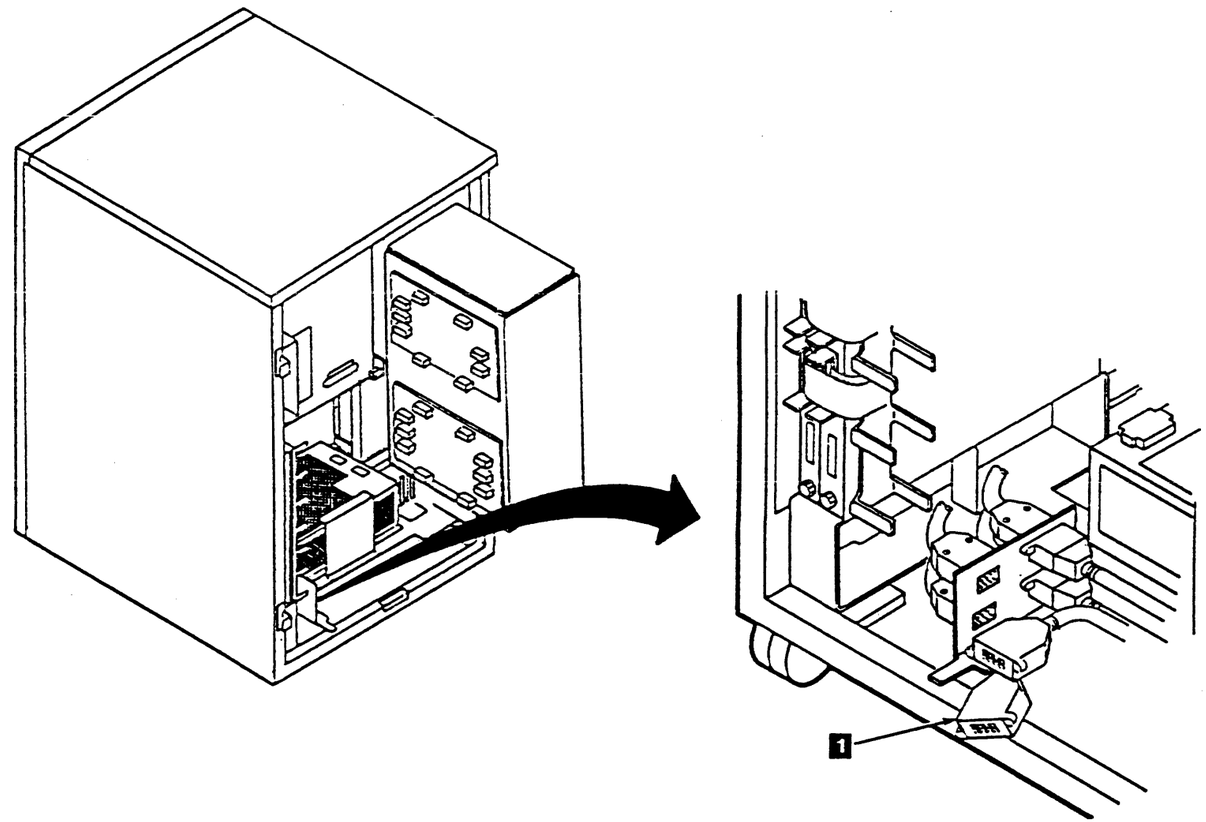

TA90 Subsystem Interconnections

The following diagram shows some of the availability features of the TA90 subsystem. It illustrates at each level where dynamic and static failover and load balancing occur.

In a 2X configuration, the TCUs perform load balancing. If a fault occurs that indicates a data path or cache problem, sense byte 2, bit 4 must be checked to see which TCU detected the fault. The combination of the sense byte information and the fault code describe which paths were in use when the fault occurred.

Notes:

1. "Statically" dual ported

   In the event of an HSC or path failure, the subsystem will automatically failover to the other path. In the example shown, assume that STI port A is active; HSC "A" is using units 0, 2, 4, 6 and HSC "B" is using units 1, 3, 5, and 7. If there is a failure of either HSC, the non-failing HSC will continue operating all eight drive units.

2. "Dynamically" dual ported

   Each TCU is "dynamically" shared by the adapters. In the event of an STI-FIPS adapter or TCU Channel Adapter processor failure, the drive unit number switches can be changed by the operator, allowing operations to continue with up to four drives (12 drives if 2X).

3. Dual communications option

   An optional Dual TCU communications coupler allows the channel adapter processor to use the other TCU to do the requested operation. This cross coupling of the TCUs provides resource sharing (load balancing) and failover for most TCU errors.

4.

   Secondary drive busses provide each TCU with a path to the other TCU's drives for use with dynamic dual porting and dual communications.

5.

   When four cables connect to one HSC, you must disable one of the ports from each adapter. For example, if you disable the left B and right B ports, and the TA90 is cabled correctly, it will come online and the connection to one of the K.si (HSC5X) interfaces will be lost. To establish a connection if a K.si requestor is lost, you must disable the port connected to the questionable K.si and enable the port on the other adapter.

TA90 Subsystem Interconnections

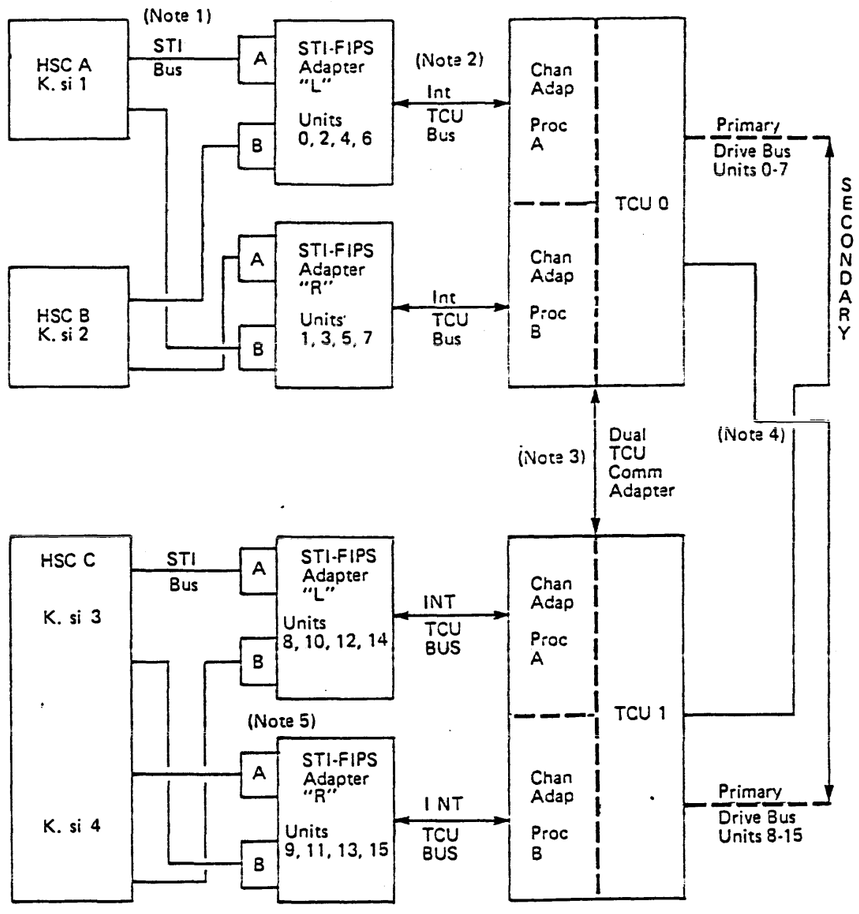

Installing the Unit Emergency Power Off (UEPO) Cable

Perform the following steps to install the Unit Emergency Power Off (UEPO) cable:

__ 1. Determine if UEPO cables are to be installed.

If no UEPO cables are to be installed, go to INST 130, "Installation Checks."

Note: The TA90 subsystem does not require UEPO jumpers if the Local/Remote switch is set to the Local mode.

__ 2. Pass the UEPO cables to be installed up through the opening in the bottom of the tape control unit.

__ 3. Find the four UEPO cable sockets located at the rear of the control unit ac power supply.

Insert the UEPO cable connectors into any UEPO socket (J5 through J8) 1.

__ 4. Complete the cable installation:

__ a. Connect the UEPO cables to the host system.

__ b. Continue the installation on INST 130, "Installation Checks."

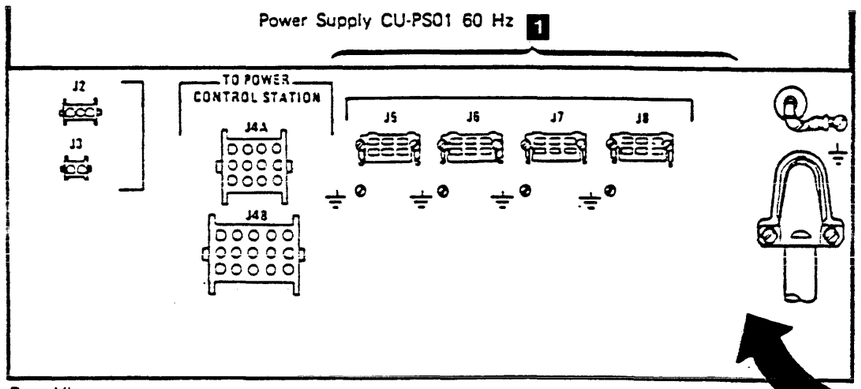

Rear View

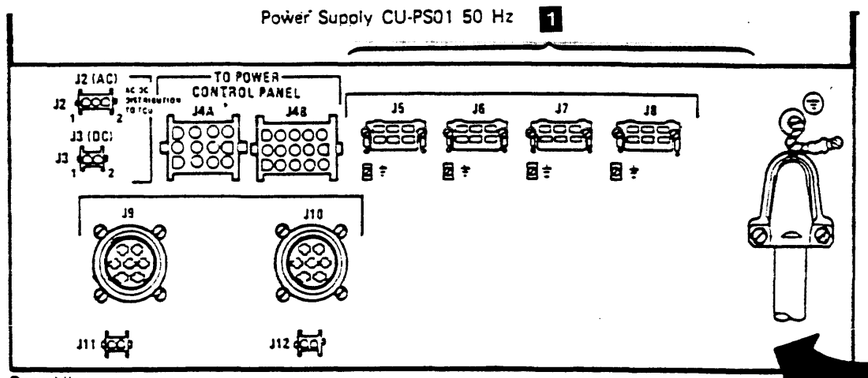

Rear View

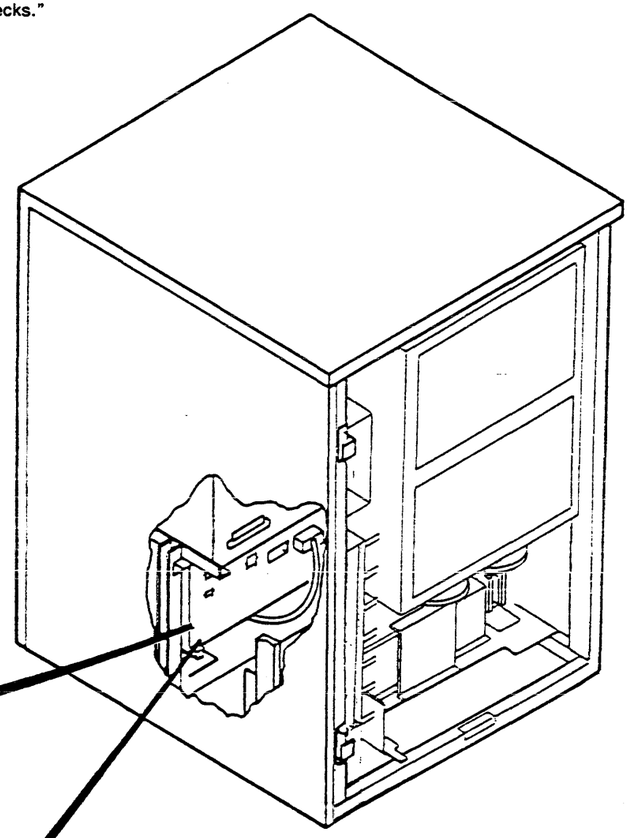

Installation Checks

These procedures complete the checkout of the installation:

1. Installing the radio frequency interference (RFI) frame pans and end plates.
2. Replacing all the subcovers and covers.
3. Running the HSC subsystem diagnostics to verify correct subsystem operation.

Installing the Radio Frequency Interference (RFI) Frame Pans and End Plates.

The RFI frame pans and end plates are part of the ship group. There are two frame pans for each tape transport unit, one frame pan (of a different size) for each tape control unit, and two end plates (one for the side of the tape control unit, and one for the side of the last drive attached to that tape control unit).

Note: When you are adding a tape transport unit(s) to an installed subsystem, ensure that you move the tape transport unit end plate (described in step 7) to the last tape transport unit attached to the tape control unit.

__ 1. Place one tape transport unit frame pan under the front of the first tape transport unit attached to TCU0 **3**. Attach the frame pan to the lower front frame of the tape transport unit with two screws.

__ 2. Repeat step 1 for each tape transport unit attached to TCU0.

__ 3. Place one tape transport unit frame pan under the rear of the first tape transport unit attached to TCU0 **5**. Attach the frame pan to the lower rear frame of the tape transport unit with two screws.

__ 4. Repeat step three for each tape transport unit attached to TCU0.

__ 5. Place one tape control unit frame pan under the front of TCU0 **2**, and attach it to the lower front frame of the tape control unit with two screws.

__ 6. Place one end plate under the left side of the tape control unit (as you face the front of the tape control unit) **1**, and attach it to the lower tape control unit frame with three screws.

__ 7. Place one end plate under the right side of the last tape transport unit attached to TCU0 (as you face the front of the tape transport unit) **4**, and attach it to the lower tape transport unit frame with three screws.

__ 8. Repeat steps 1 through 7 for TCU1 if you have a dual tape control unit subsystem.

Note: If there are no tape transport units attached to TCU1, there will be an extra end plate **4** to store for later use.

Reinstalling Subcovers and Covers

When the installation checks have been completed, all the subcovers and covers that were removed must be reinstalled.

__ 1. Take the cover that was on the right side of the tape control unit, and install it on the right side of the last tape transport unit attached to that tape control unit.

__ 2. Go to CARR-TCU 2-2, and CARR-DR 2-2 for procedures to adjust (if necessary) and reinstall the covers and subcovers on the tape control unit(s) and tape transport units.

__ 3. Go to INST 131 to continue the installation checks.

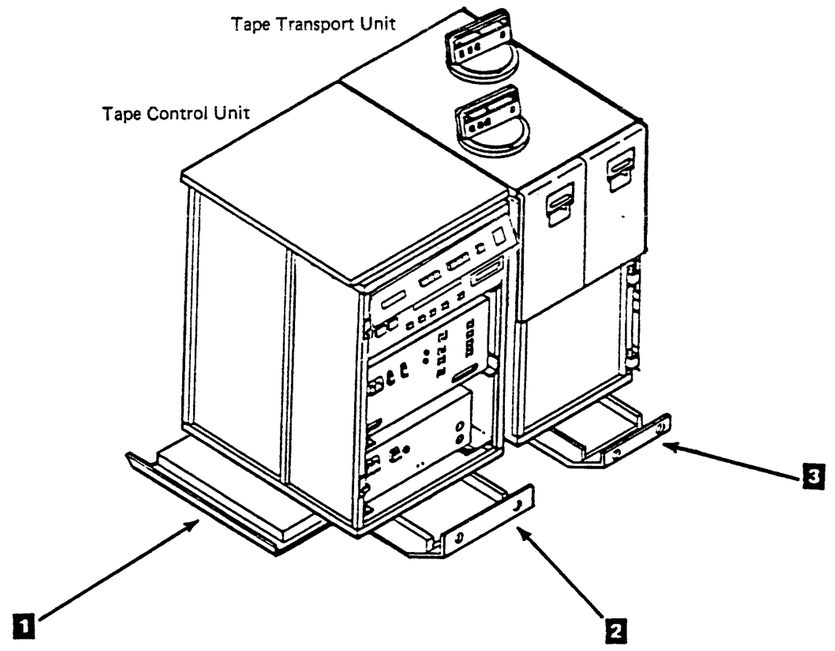

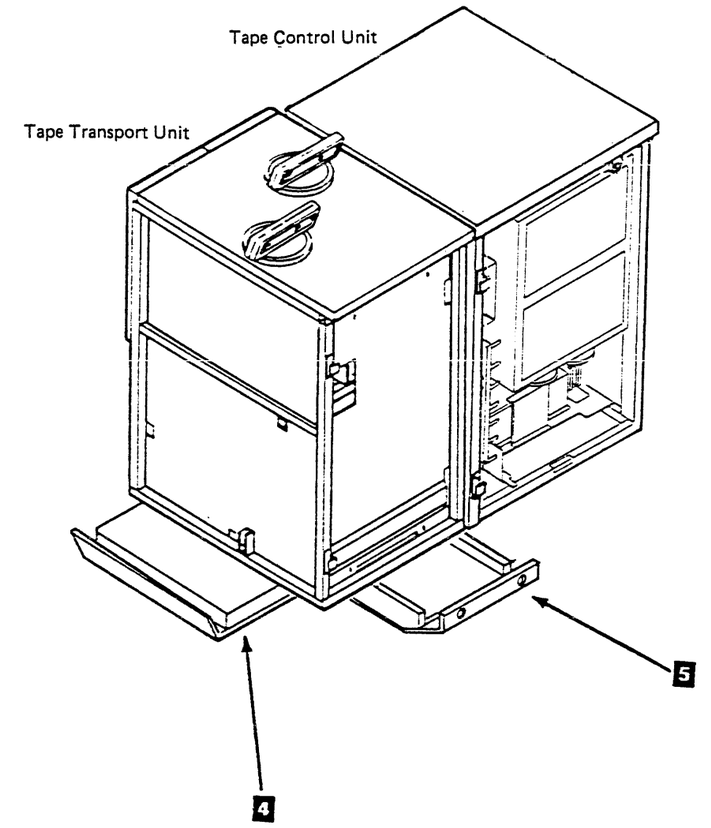

Installation Checks (Continued)

Running ILEXER and ILTAPE

ILTAPE and ILEXER are run from the HSC. Refer to CE/HSC 1 or to the appropriate HSC user documentation for more information.

Perform the following procedure to test the TA90

1. Run ILTAPE (diagnostics and canned sequence) for three passes. No errors are allowed. If both STI ports are used, run ILTAPE through the second port for one pass.
2. Run ILEXER. Use the GCR worst case data pattern (22) for 15 minutes. If both STI ports are used, run ILEXER through the second port for 15 minutes.

Before You're Through...

__ 1. Put the support diskette and the blank cartridge in the pocket in the front cover of the tape control unit.

__ 2. Check and repair any drive that did not operate correctly.

__ 3. If the Automatic Cartridge Loader feature is installed, skip the next step.

__ 4. Close all the tape drive cartridge latches.

Note: The cartridge latch should be kept closed when the tape drive is not being used. (A cartridge need **not** be in the drive.) When the tape drive is needed, open the cartridge latch by pressing the Unload switch.

Post-Installation

Installation Reporting

After the subsystem is installed and tested:

- Write the subsystem serial number on the spine tab of all volumes of the TA90 Maintenance Guide.
- Update the Site Management Guide.
- Report the installation complete using the existing LARS procedure.

Adding Tape Transport Units

The following procedures are used to add more tape transport units to an already installed subsystem:

__ 1. Have the customer deallocate all jobs and paths to the tape control unit and tape transport units that will be receiving the additional tape unit(s).

__ 2. Power off the tape control unit and tape transport units that will be affected.

__ 3. Remove the side cover from the end tape transport unit installed on the subsystem.

__ 4. Remove the radio frequency interference (RFI) endplate from the end tape transport unit installed on the subsystem.

__ 5. Place the the new tape transport unit into position.

__ 6. Open the front and rear covers.

Warning: Ensure that the power cable is not pinched between the machine frames.

__ 7. If the safety cover has the retainer tightened over it, loosen the screw holding the retainer to the ac power cap, rotate the retainer and retighten the screw.

__ 8. Connect the next tape transport unit ac power cable 5 to the preceding tape transport unit's power cable socket 8 after removing the socket safety cover (if not already removed).

Ensure that the ac power cable is routed away from the compressor motor and is fastened to the back of the frame 16 to prevent pinching the cable when the units are moved together.

__ 9. Remove the device data bus terminator card, P/N 29-27173-01 3, and thermal terminator 9 from the preceding tape transport unit.

__ 10. Plug the device data bus cable 7 from the new tape transport unit into the preceding tape unit's device data bus connector, and fasten the cable in place with the retaining screws.

__ 11. Connect the two read bus cables 4 from the new tape transport unit to the preceding tape unit 1. Ensure that the local (bus A) and the remote (bus B) cables are plugged into the proper sockets on the tape transport unit, making sure they are not crossed.

__ 12. Connect the thermal cable 6 on the new tape transport unit to the thermal connector 2 on the preceding tape transport unit.

__ 13. Continue with the next step on INST 136.

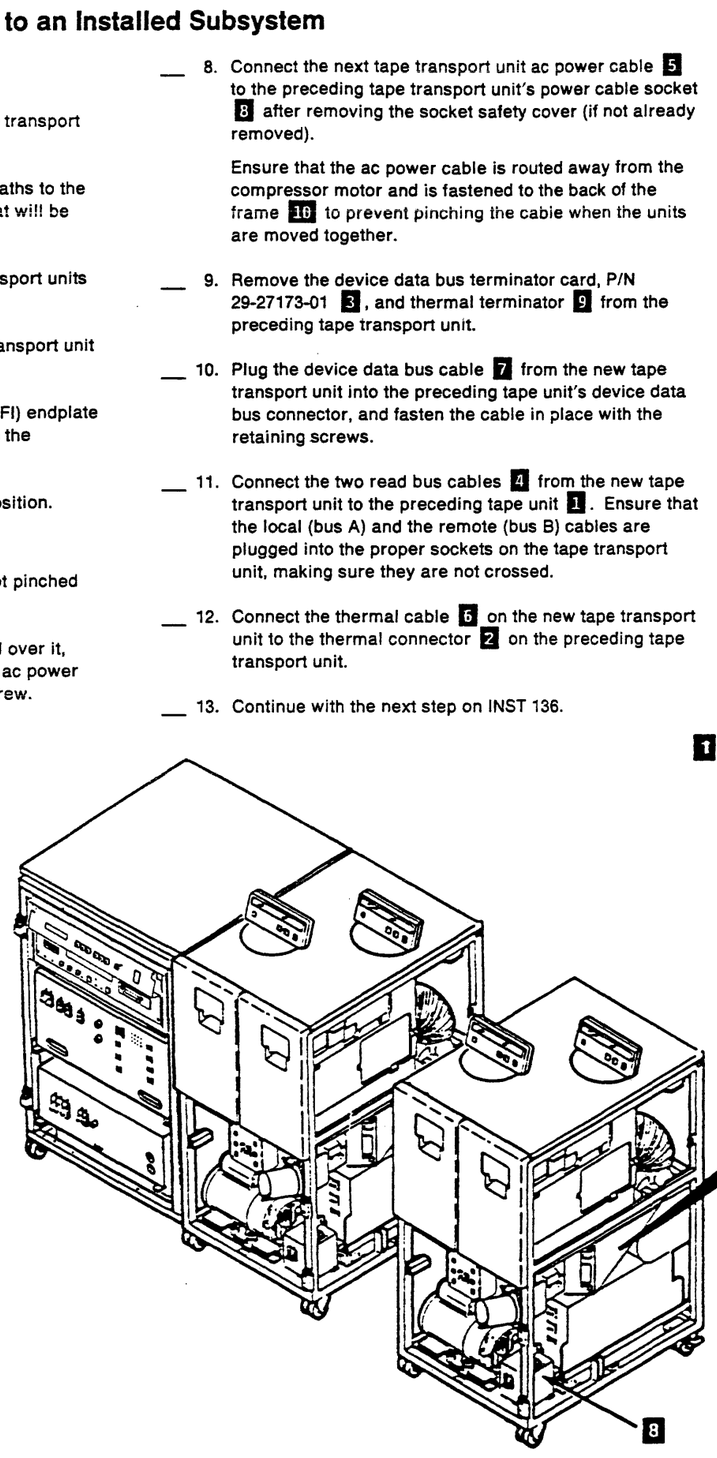

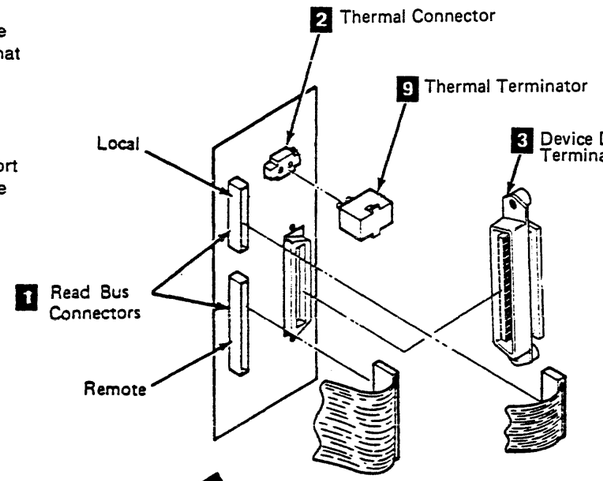

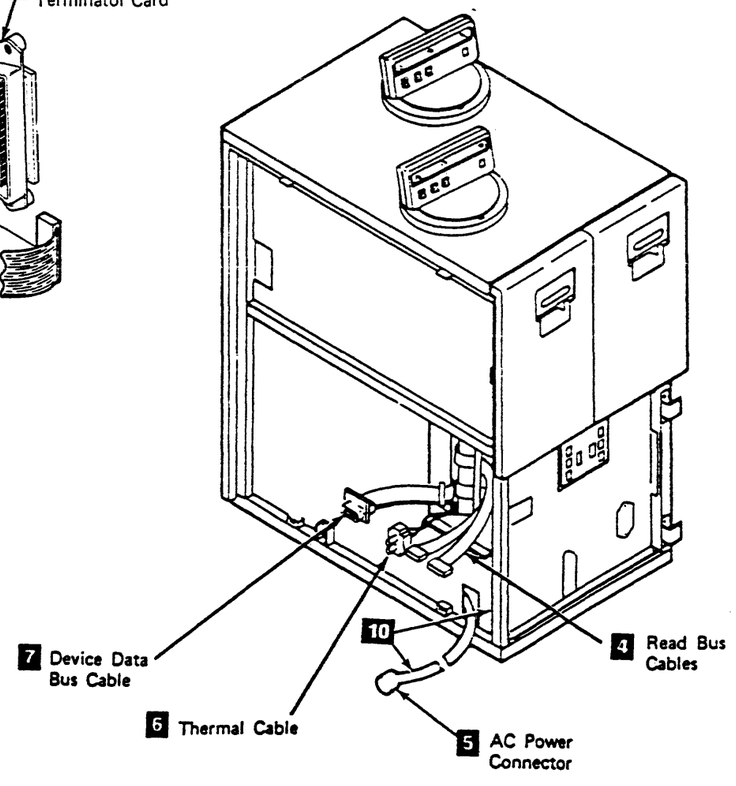

Adding Tape Transport Units (Continued)

__ 13. Place the next tape transport unit against the preceding tape unit.

Warning: When installing a tape transport unit to a tape transport unit with the automatic cartridge loader feature installed on any drive, the drive must be opened approximately 5 cm (2 in.) to prevent the conductive seal from being pinched between the tape transport unit frames.

Note: Be sure the position of the casters does not prevent the tape transport units from fitting snugly together.

__ 14. Fasten the new tape transport unit to the preceding tape unit by installing a hex bolt and washer at the rear of the tape transport unit **1**, and at the front of the tape transport unit **2**. It may be necessary to remove the Tape Transport Unit Front Safety cover to install hex bolt **2**. See CARR-DR 2-1 if the cover needs to be removed.

Note: If the tape transport units are not correctly aligned, the covers may bind. Ensure that the covers are not binding.

__ 15. Place the rear casters on the new tape transport unit so the caster lock thumbscrews **3** are accessible.

__ 16. Lock the rear casters on the new tape transport unit by turning the caster lock thumbscrews clockwise until they are tight.

__ 17. Repeat steps 4 through 16, on INST 135 and INST 136, for each additional tape transport unit that is attached to the tape control unit.

__ 18. Go to the next step on INST 137.

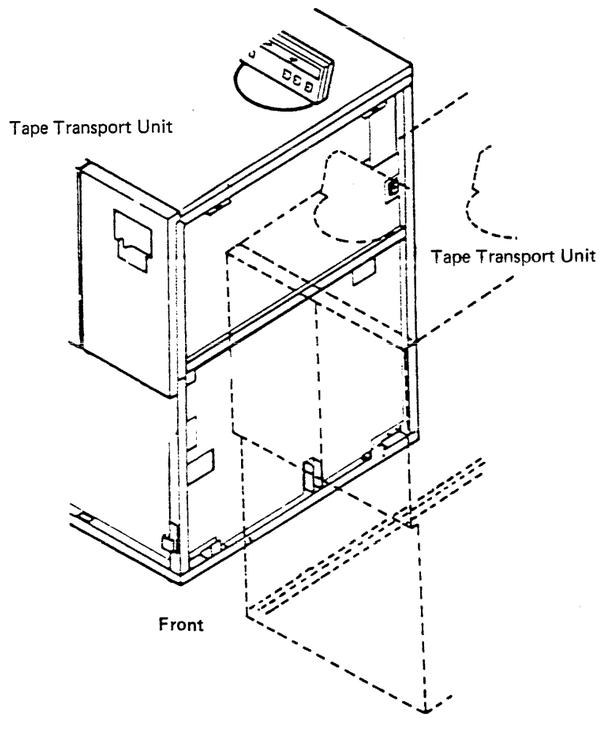

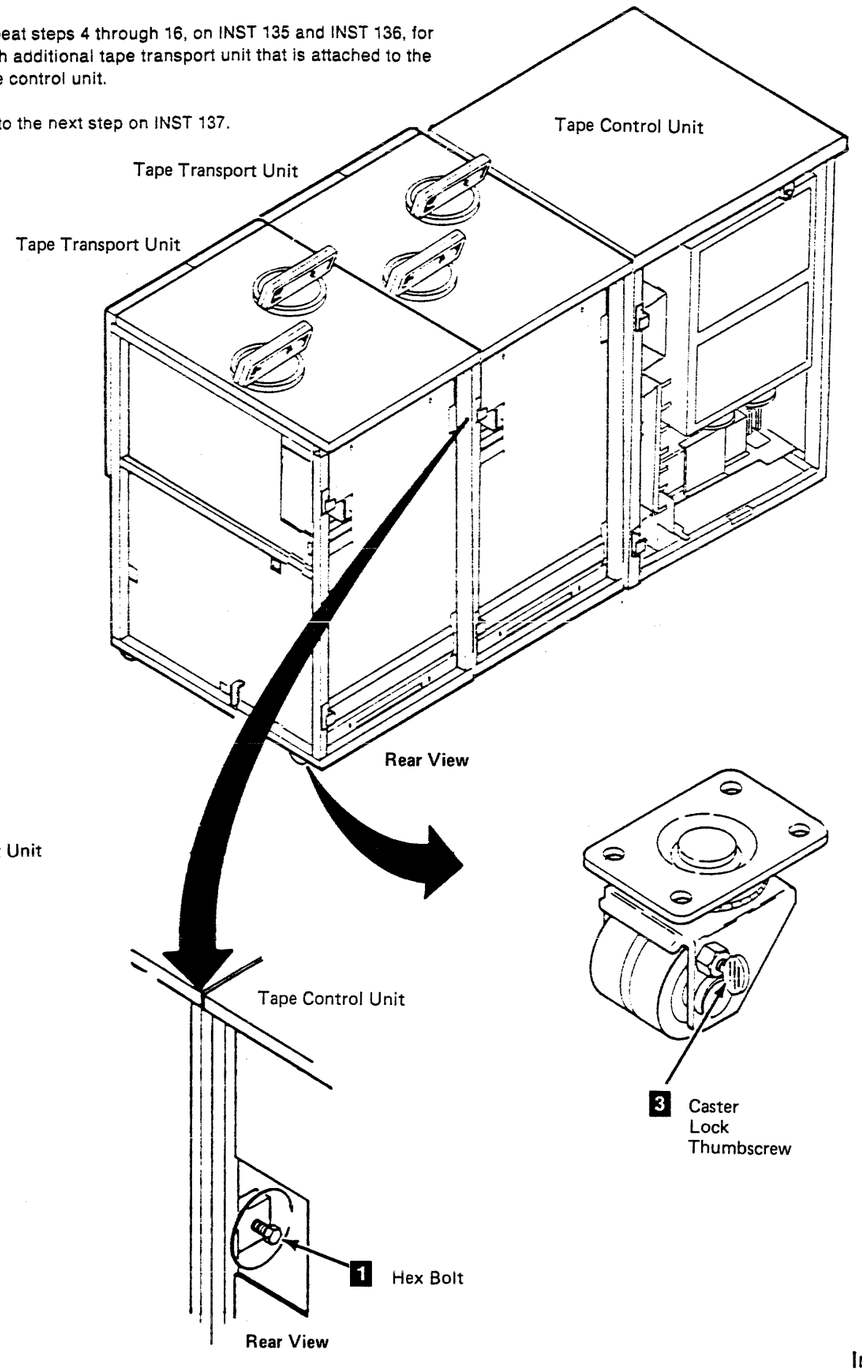

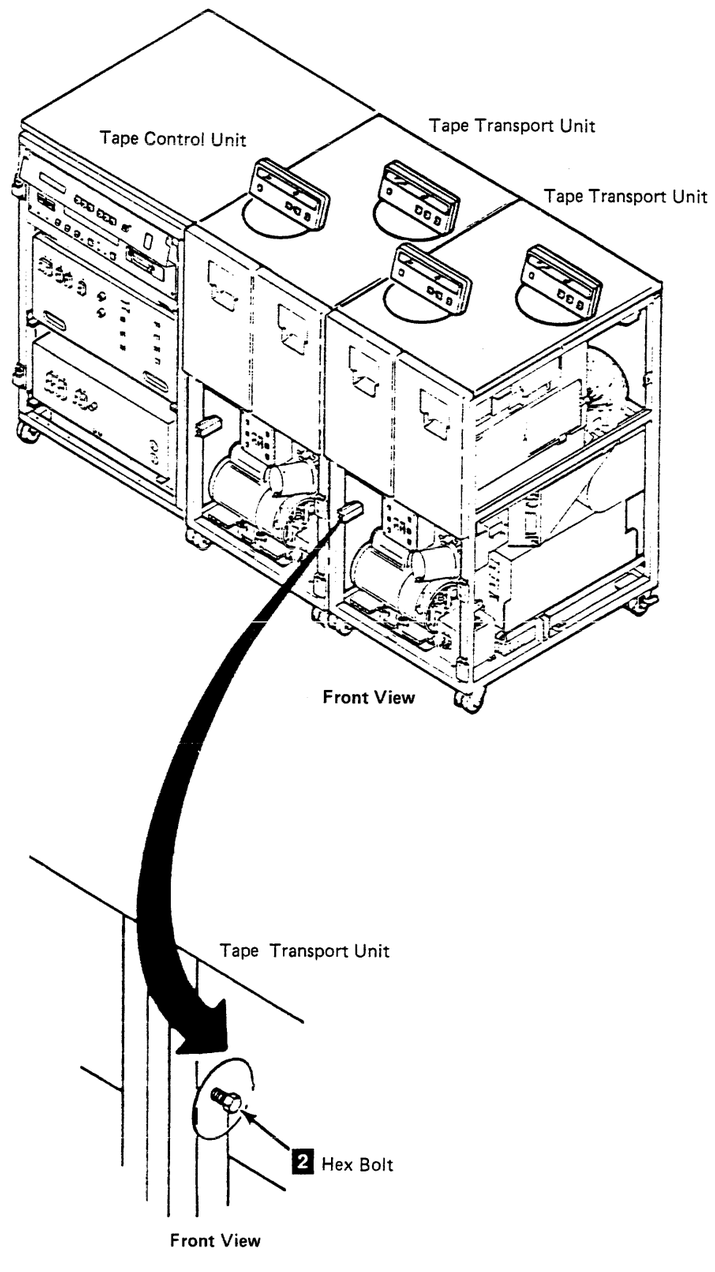

Adding Tape Transport Units (Continued)

On the last tape transport unit attached to the tape control unit:

__ 19. Place the device data bus terminator card P/N 29-27173-01 [4] removed from the last tape unit installed in the new tape transport unit's device data bus connector [5].

__ 20. Plug the thermal terminator [3] into the thermal connector [2]. The thermal terminator was removed in a prior step from the preceding tape transport unit.

__ 21. Screw the safety cover [1] onto the ac power cable socket.

DANGER

Dangerous voltages are present at the ac power cable socket. The safety cover must be on when the socket is not being used.

__ 22. After the safety cover [1] is installed, loosen the screw holding the retainer [6] to the ac power box. Rotate the retainer and tighten the screw with the retainer positioned to prevent the safety cover from being removed.

__ 23. Go to INST 50 for instructions on setting the drive logical and physical addresses, return here when finished.

__ 24. Go to INST 56 for instructions on checking tape transport unit power supply jumpers, return here when finished.

__ 25. Go to INST 70 if the tape transport unit is attached to a single tape control unit subsystem, return here when finished.

__ 26. Go to INST 76 if the tape transport unit is attached to a dual tape control unit subsystem, return here when finished.

Before You're Through...

__ 1. Run the GMP on the drives added to the affected tape control units (see CE/HSC).

__ 2. Go to INST 130 and install the RFI frame pans and end plates, and reinstall all covers and subcovers that were removed.

__ 3. Go to INST 131 and run ILEXER/ILTAPE.

__ 4. This completes the installation of additional drives to an existing subsystem. Return the subsystem to the customer.

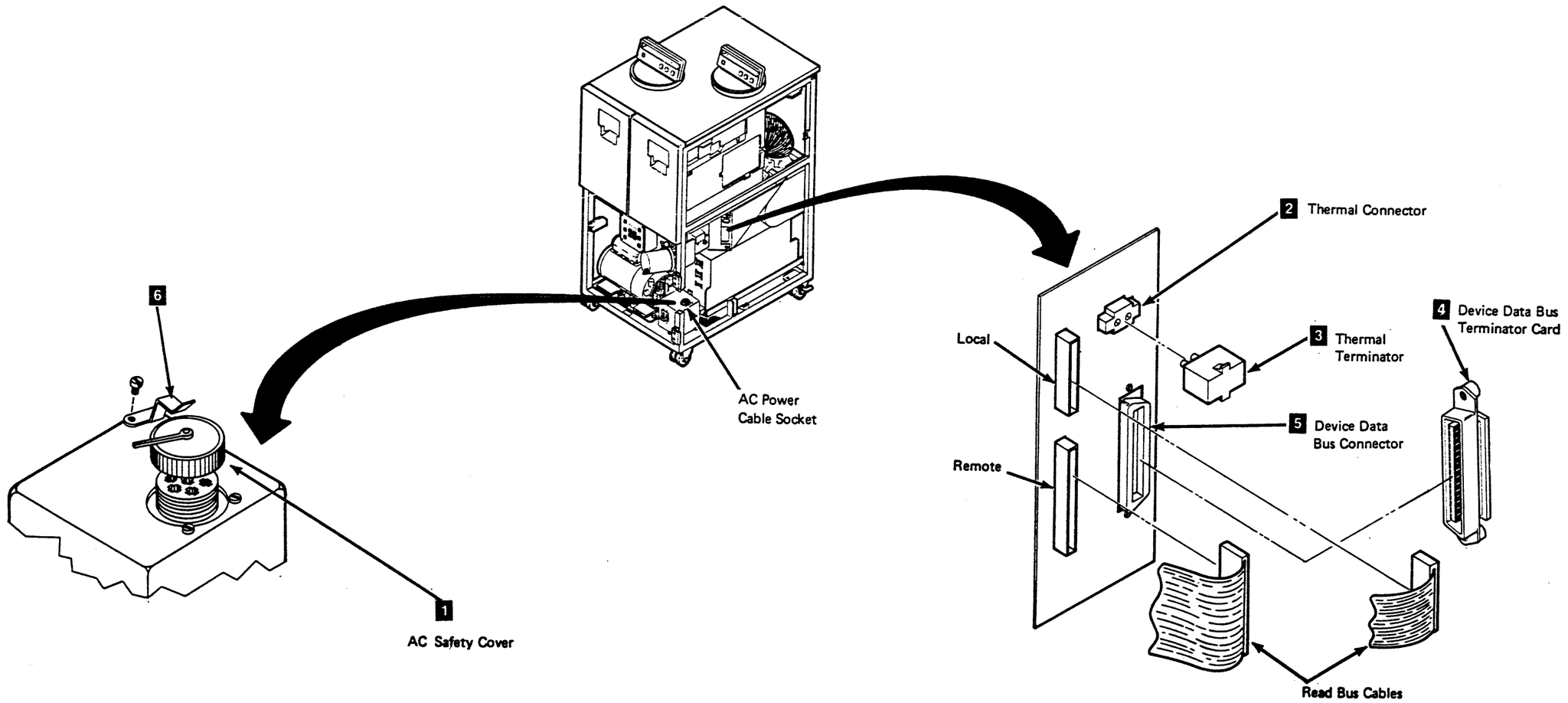

TA90 Relocate or Discontinue

Getting Started

To remove or relocate a TA90 subsystem, perform the following steps:

__ 1. Before proceeding, check the following:

- __ a. Make sure that all drives are unloaded and that the tape cartridges have been removed.
- __ b. Make sure that the TA90 subsystem is offline to all host systems.
- __ c. Make sure that any ports to be disabled from the tape control unit have been deallocated from the operating system.

__ 2. Remove the front, rear, and left side covers from the tape control unit. See CARR-TCU 2-1 for cover removal procedures.

Removing Power

__ 3. Remove the tape control unit rear safety cover.

__ 4. Set the Online Test/Offline Test switch **1** to Offline Test.

__ 5. Set the tape control unit Power On/Off switch **2** to Off.

__ 6. Set the tape control unit Unit Emergency Power switch **3** to Power Off.

__ 7. Set the Drive Power switch **4** to Off on each drive.

__ 8. Have the customer remove power from the outlet.

__ 9. Remove the power cable **5** from the customer's outlet and tape the coiled cable behind the I/O cable connectors **6**.

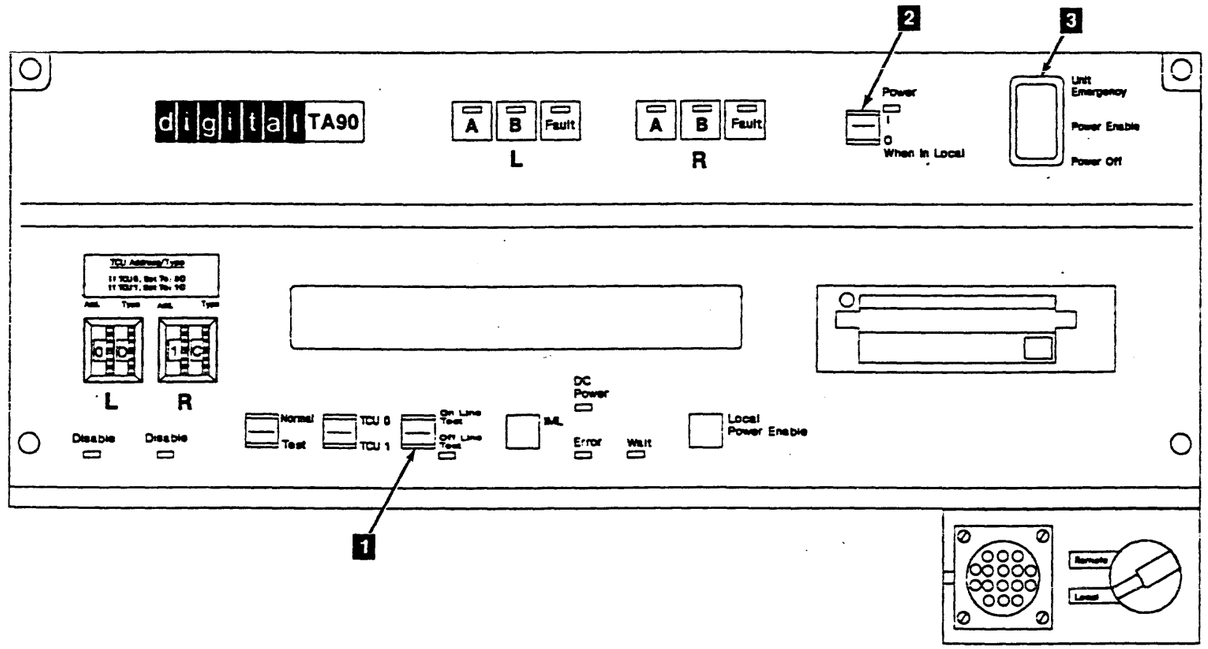

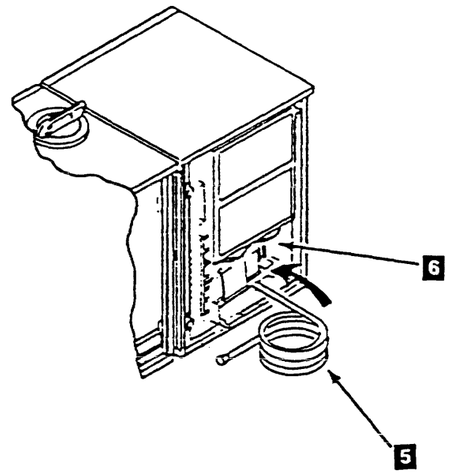

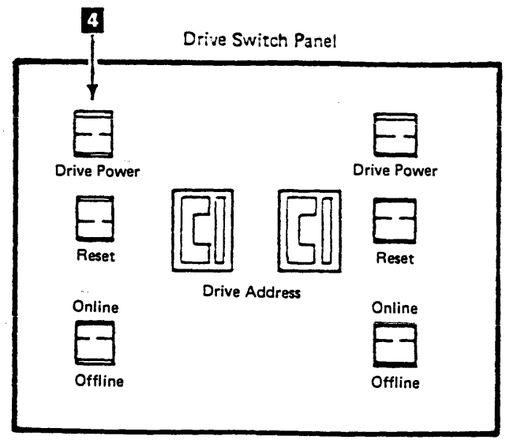

Removing Unit Emergency Power Off (UEPO) Cables

__ 14. Disconnect the UEPO cables from the controlling computer.

__ 15. Remove the four UEPO cables from connectors J5 through J8.

__ 16. Pass the UEPO cables down through the opening in the bottom of the tape control unit.

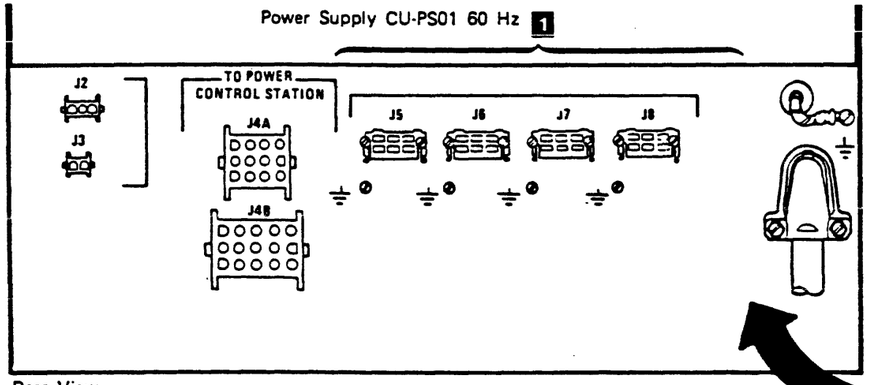

Rear View

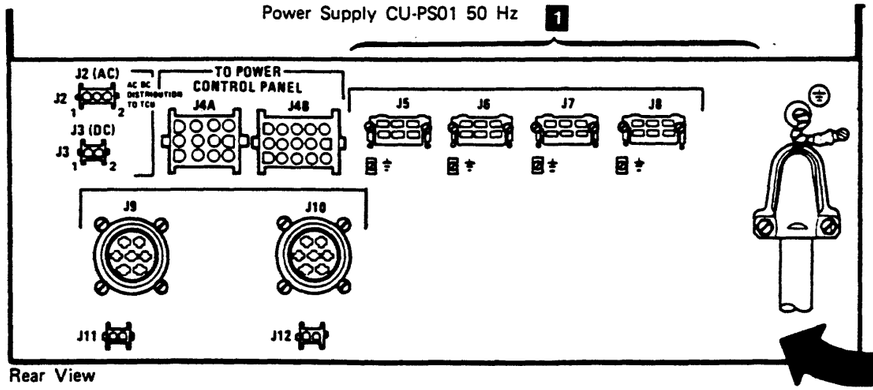

Rear View

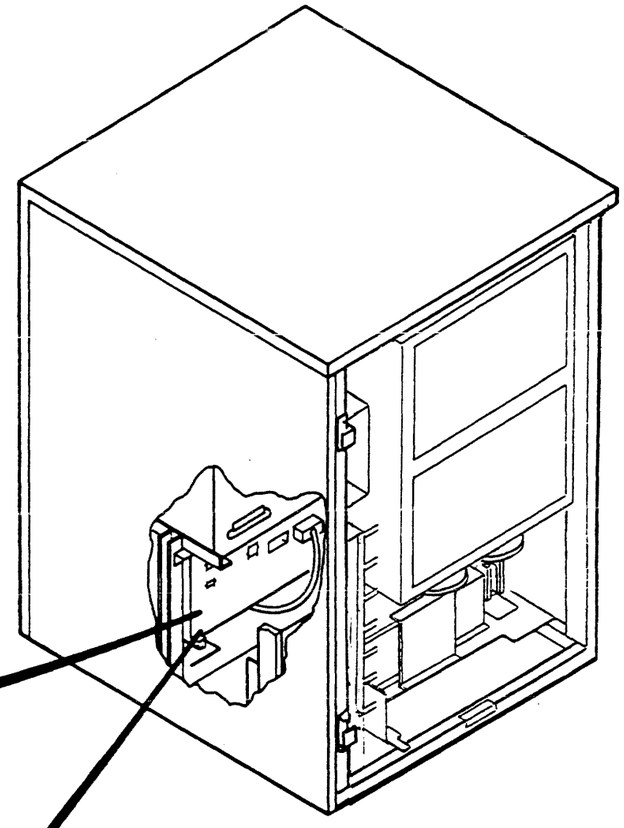

TA90 Relocate or Discontinue

Removing Dual Tape Control Unit Communication Feature Cables

__ 17. Disconnect both ends **1** of the 3-connector cable (A3, A4, and A5), one end at each tape control unit.

__ 18. Disconnect both ends of the 2-connector feature cable (A1 and A2) **2** at the tape control units.

__ 19. Loosen the wingnuts **4** on the cable retaining brackets **5** and open the brackets.

__ 20. Slide the cables from between the guide posts.

__ 21. Swing the retaining brackets closed and tighten all the wingnuts.

__ 22. Disconnect the cable ground straps **3** from each tape control unit.

__ 23. Place protective covers over the connectors at both ends of the feature cable.

__ 24. Place the cables in the shipping carton.

Note: If you are relocating the machines within the same building, you don't have to pack them.

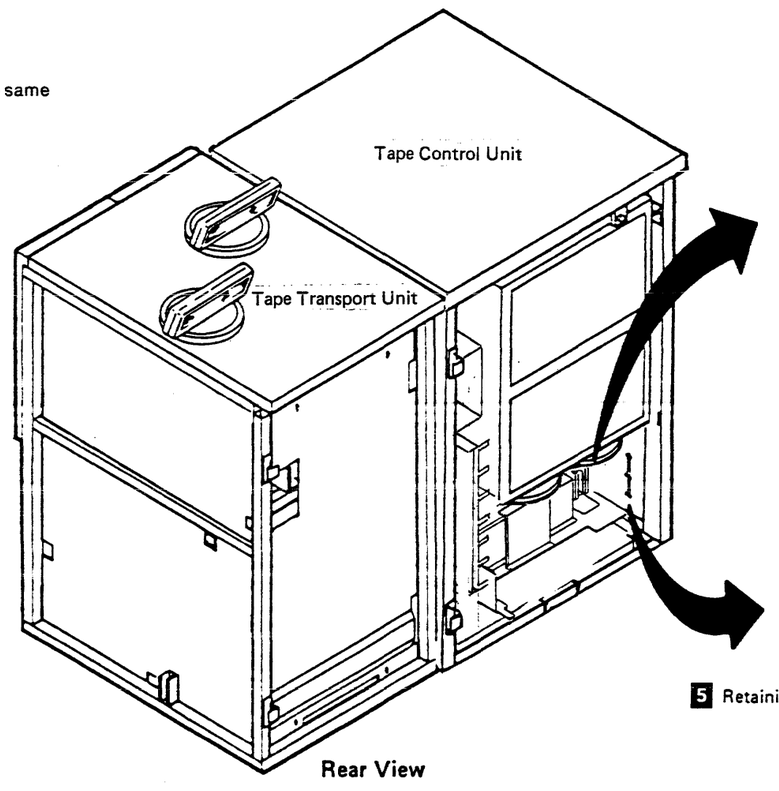

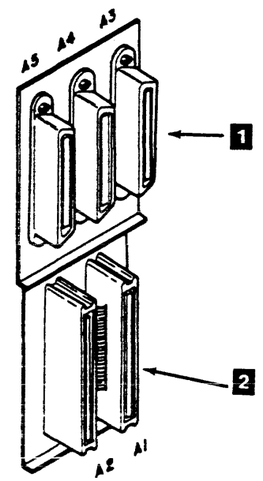

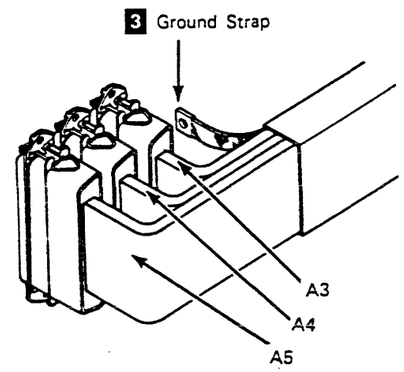

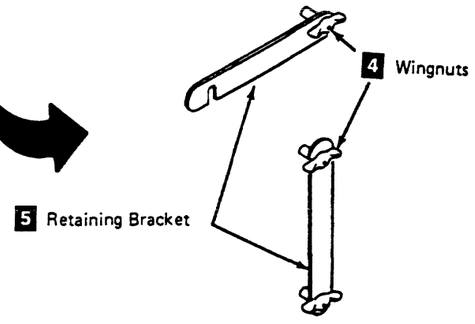

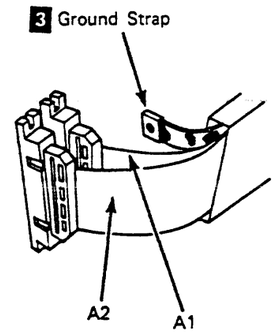

TA90 Relocate or Discontinue

Disconnecting the Tape Transport Units and the Tape Control Unit

__ 25. Unlock the rear casters 3 of the tape control unit and tape transport units.

CAUTION:
TILT HAZARD. Do NOT open both drives of a tape transport unit that is not bolted to another tape transport unit or tape control unit. With the automatic cartridge loader feature installed and both drive drawers fully extended, a tape unit that is not bolted to another unit will tilt forward with about 20 lbs. of force applied to the top of either automatic cartridge loader.

__ 26. Remove the hex bolts and washers 2 4 from the front and rear of each unit. It may be necessary to remove the Tape Transport Unit Front Safety cover to remove hex bolt 2. See CARR-DR-2-1 if the cover needs to be removed.

__ 27. Push the tape control unit about 20 cm (8 in) away from the first tape transport unit.

__ 28. Disconnect the tape transport unit to tape control unit power cable 1 and tape it to the side of the tape transport unit.

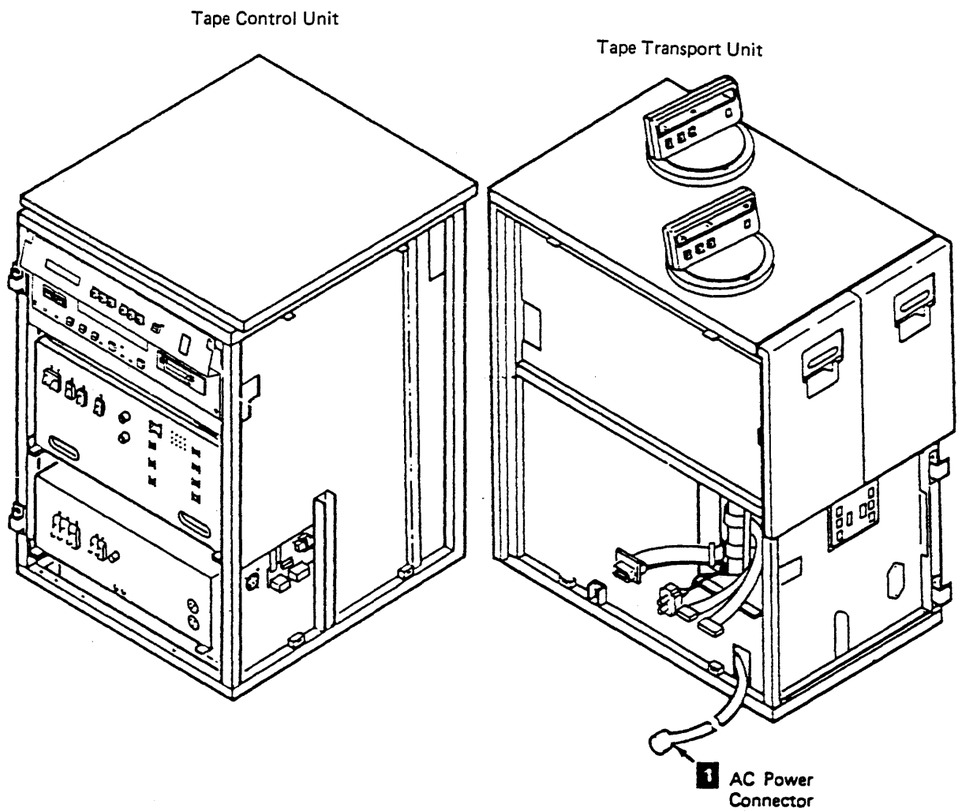

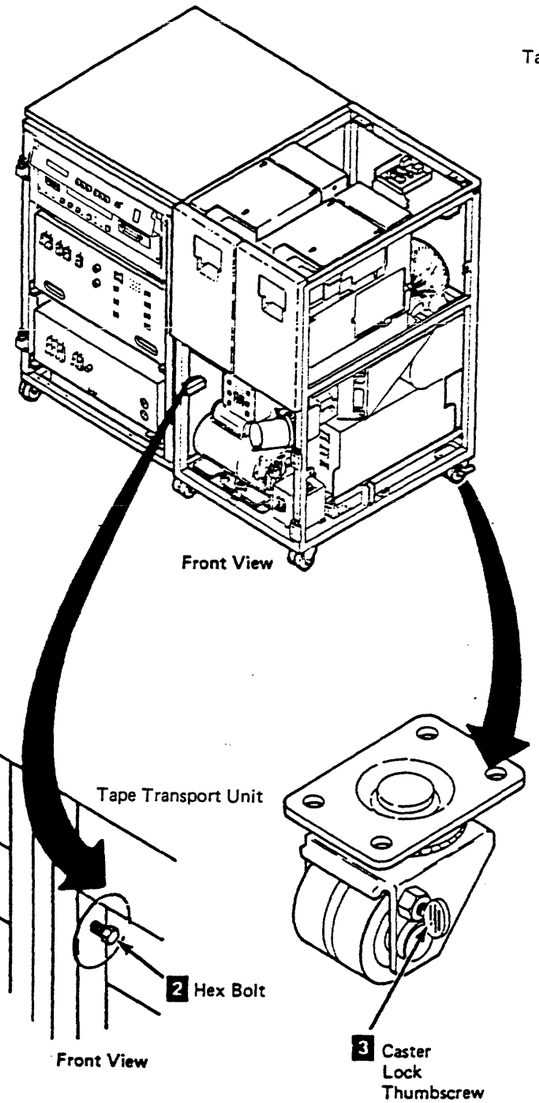

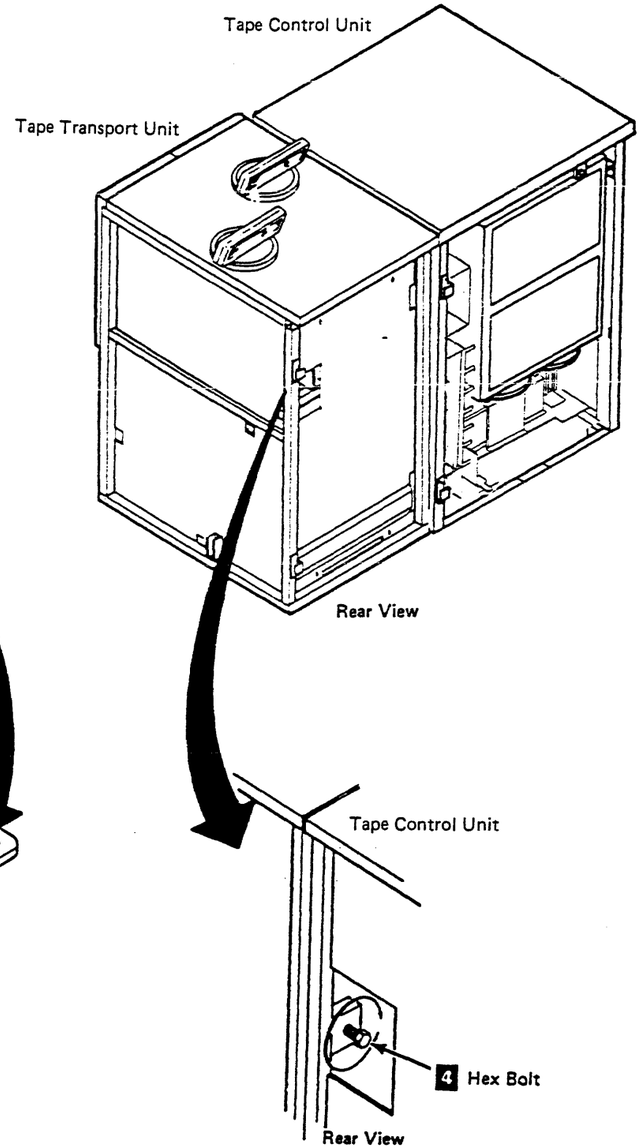

Disconnecting the Tape Transport Units and the Tape Control Unit (Continued)

__ 29. On the last tape transport unit attached to the tape control unit:

- __ a. Remove the side cover.
- __ b. Remove the device data terminator card P/N 29-27173-01 **2**.
- __ c. Remove the thermal terminator **1**.
- __ d. Be sure the terminators are included with the tape control unit shipping group.

__ 30. Disconnect the device data and read bus cables **3** **5** and tape them to the side of the tape transport unit.

__ 31. Disconnect the thermal cable **4**.

__ 32. Repeat steps 30 and 31 for each additional tape transport unit.

To complete the removal/replacement:

__ 33. Install the side cover you removed from the tape transport unit on the right side of the tape control unit (as you face the front of the tape control unit).

__ 34. Reinstall any covers that were removed.

__ 35. Report the activities performed, using the existing Branch Office procedures.

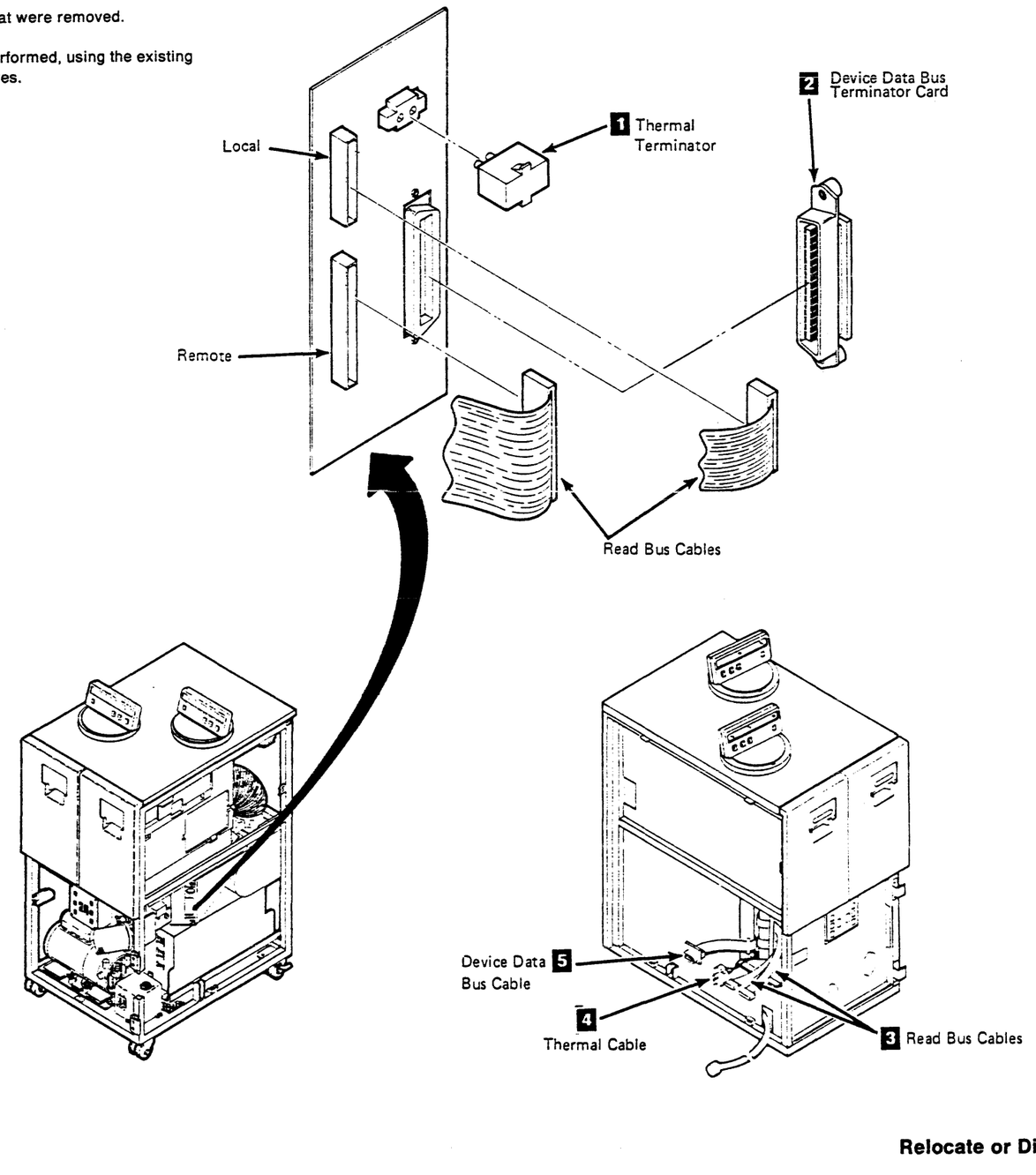

Installation Instructions

Preparation

Read and understand the purpose and details of this installation instruction.

Check all items and count parts listed on the BOM to be installed to determine that all parts have been received.

Purpose and Description

Purpose

To Install Automatic Cartridge Loader.

Description

Replace the manual latch assembly and deck front cover with the loader assembly and Automatic Cartridge Loader Mechanical Assembly.

Special Tools and/or Materials Required

NAME	DEC P/N
ESD Grounding Kit	
Electrical Plastic Tape	
Pin Removal Tool	
TA90 Scratch Cartridges (one cartridge is required for diagnostic tests)	

Safety

CAUTION:
Do not open both drive drawers at the same time if the automatic cartridge loader feature is installed and the tape transport unit is not bolted to the tape control unit or to another tape transport unit. A stand alone tape transport unit with the automatic cartridge loader feature installed can tip over if both drive drawers are opened to the full extended position and additional downward force is applied to the drive drawer(s).

CAUTION:
Observe standard safety practices. For further information refer to PREF, page SAFETY 10.

TA90 Subsystem Power

The subsystem power need not be turned off. However, each drive must be powered off when the Automatic Cartridge Loader is being installed on that drive.

Install Automatic Cartridge Loader INST 900

Installation Instructions (continued)

Details Of Installation

__ 1. Dismount the drive to be updated.

__ 2. Open the drive front cover 3.

__ 3. Set the drive(s) Online/Offline switch(es) to Offline for all drives to be updated. (See LOC 1 for drive switch locations.)

__ 4. If there are cartridges in any of the drives, remove them using instructions in CART 1.

CAUTION:
When powering off both drives in a TA90 you must turn off the AC breaker to prevent possible circuit damage (See CARR-DR8 for power off procedures).

__ 5. Set the Drive Power switch to Off if you are removing power from one drive (See LOC 1).

Remove Drive Drawer Clear Plastic Cover

CAUTION:
Do not open both drive drawers at the same time if the automatic cartridge loader feature is installed and the tape transport unit is not bolted to the tape control unit or to another tape transport unit. A stand alone tape transport unit with the automatic cartridge loader feature installed can tip over if both drive drawers are opened to the full extended position and additional downward force is applied to the drive drawer(s).

__ 1. Release the drive latch 5, and pull out the drive drawer you want to work on, to the full extended lock position.

__ 2. Remove the two pins 1 holding the clear plastic cover 2 and remove the cover. Set the cover aside for later use.

Remove Drive Drawer Plastic Cover

__ 1. Ensure that the cartridge latch door 7 is closed. Remove the two drawer cover bracket screws 6 from the cartridge latch assembly. Do not remove the bracket from the cover.

__ 2. Lift up on the cover 7 and at the same time pull the cover away from the drive, then push the cover down to clear the bottom cover pins.

__ 3. Set the cover 8 and cover bracket screws 6 aside. The cover and screws will not be used with the automatic cartridge loader feature.

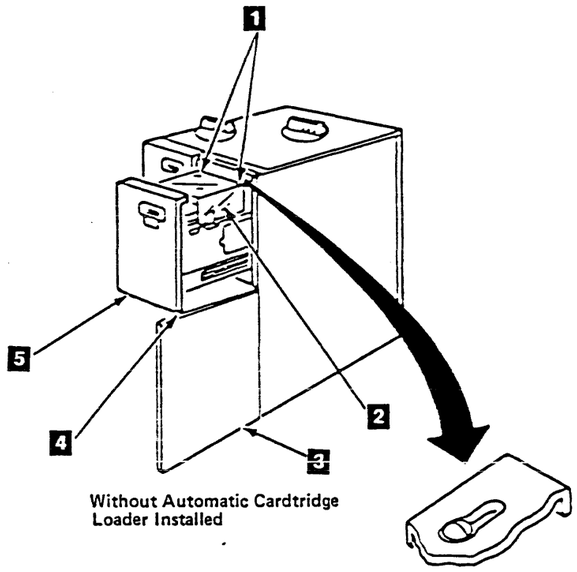

Without Automatic Cardtridge Loader Installed

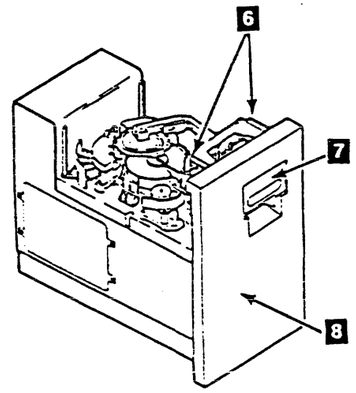

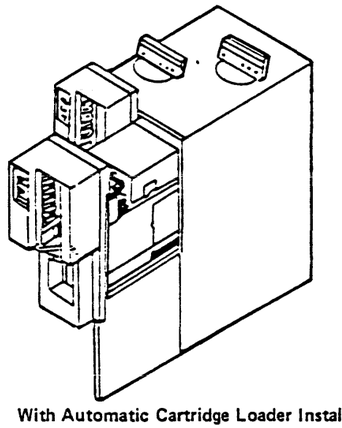

With Automatic Cartridge Loader Installed

Installation Instructions (continued)

Remove the Cartridge Latch Assembly

__ 1. Disconnect the file protect switch cable connector 7 from J3 8.

__ 2. Loosen the set screw 1 and unplug the cartridge present cable connector 2. Remove the connector from the cartridge latch assembly.

Note: The cartridge present sensor 3 remains in the cartridge latch assembly 14.

__ 3. Remove the screw and cable clamp 6. Disconnect the cartridge latched sensor cable connector 5 from the cartridge latched sensor 4. Set the cable clamp and mounting screw aside. Parts will not be re-used.

__ 4. Disconnect the cartridge latch solenoid cable connector 10 J5 from P5 9, by pinching on the end of the connector retainer.

__ 5. Turn the pivot arm 12, by holding at the indicated area, counter-clockwise to move the threader arm 11 to the position shown (the 12 o'clock position). This moves the threader arm out of the way and will prevent the arm from being broken.

Note: In the next step, route cables next to the latch assembly as required, to enable the removal of the latch assembly.

__ 6. Remove the three cartridge latch assembly mounting screws 13 and lift the latch assembly 14 off the baseplate 15. Save the screws for later use.

__ 7. Set the cartridge latch assembly 14 aside, it will not be reused.

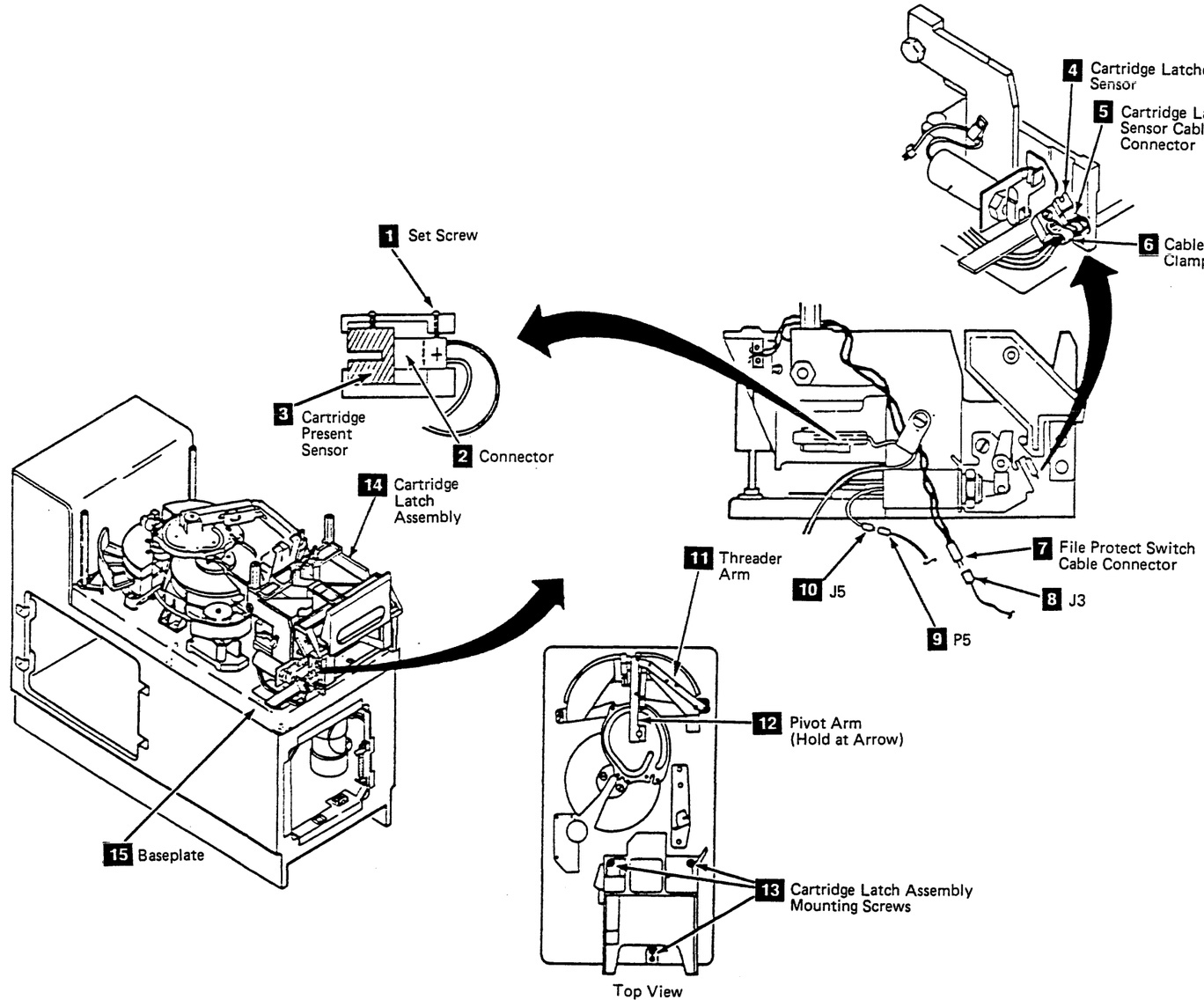

Installation Instructions (continued)

Install the Loader Assembly

Note: In the next step there are two styles of retaining clips. Refer to 3 to determine which style you have.

__ 1. Remove the cartridge present sensor 8 from the new load assembly, by unlatching the retaining clip 3. Retain the sensor for later use.

Note: In the next step, route cables to ensure that the cables will not be pinched during the installation of the load assembly.

__ 2. Place the load assembly 10 over the locating pins on the baseplate.

__ 3. Install the three mounting screws 1 removed in INST 920 step 6, to mount the load assembly to the baseplate.

__ 4. Connect the cartridge present cable connector 7 to the cartridge present sensor 8 removed in step 1. The + label on the connector and the E + mark on the sensor must be located as shown.

__ 5. Replace the cartridge present sensor 8 and cable connector 7 into the load assembly. The + label on the connector must be visible. Close the sensor retaining clip 3 to hold the sensor and cable connector in position.

__ 6. Connect the cartridge latched sensor connector to the cartridge latched sensor 16. The + label on the connector must be visible.

__ 7. Connect the file protect switch cable connector 5 to J3 4.

Note: In the next step, do not over torque the motor in the fully up or down position. The tray is fully up or down when the cam arm is in the vertical position 15. Do not rotate the motor with the connecting rod cam assembly.

__ 8. Lower the tray to the full down position by turning the hand knob located on the load motor 2 counterclockwise, when viewed from knob end. Ensure cables are not damaged.

__ 9. Move the receiver 13 in position to receive the threader.

__ 10. Turn the pivot arm 14, by holding at the indicated area, clockwise to move the threader pin 12 into the receiver 13.

Note: In the next step, if the tray is not in the full up position an error will occur at diagnostic check.

__ 11. Raise the tray to the full up position by turning the hand knob 2 located on the load motor clockwise, when viewed from knob end. This will engage the threader pin.

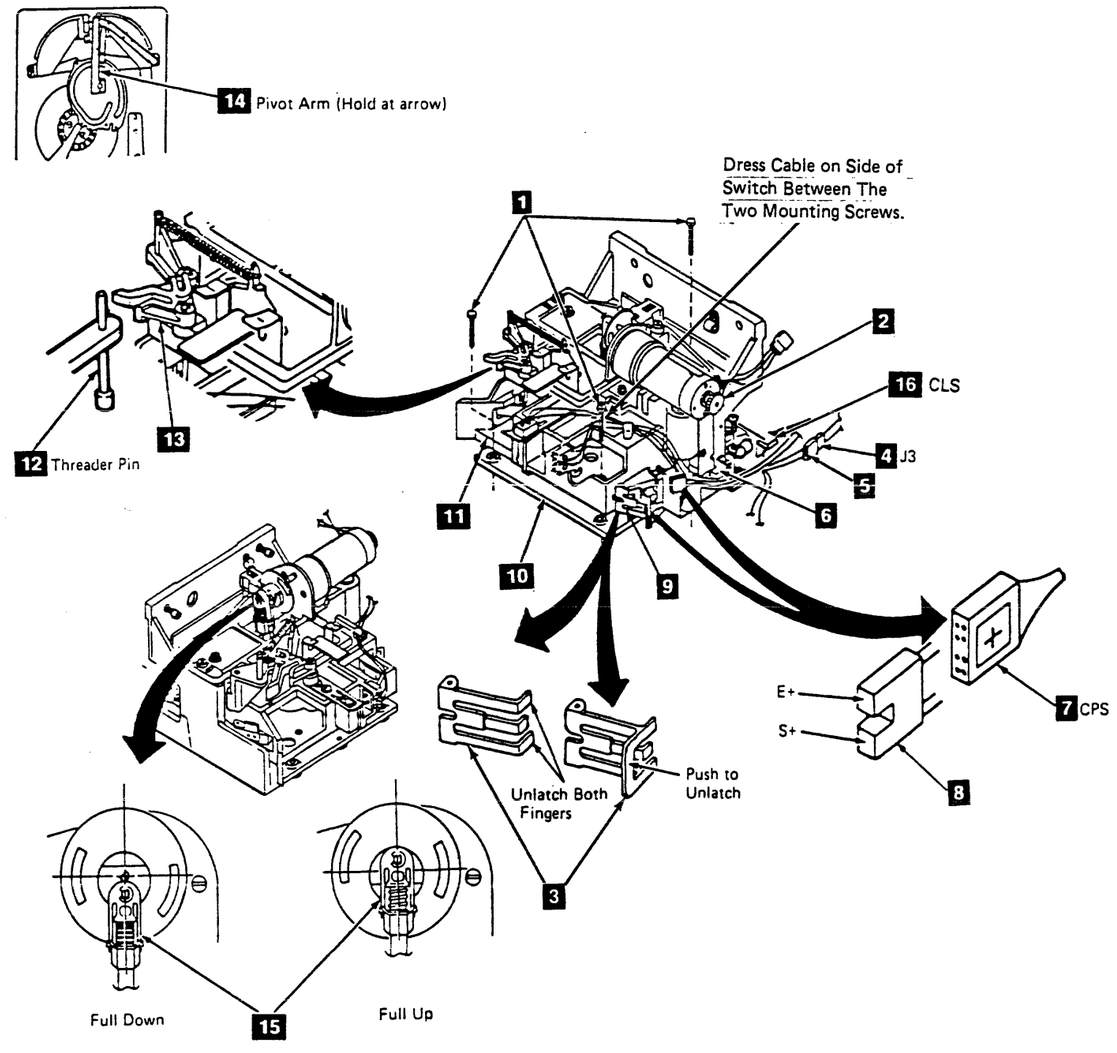

Installation Instructions (continued)

Install the Power and Signal Cables

__ 1. Thread the signal cable 2 (TU-P1 connector end) through the baseplate opening 1.

__ 2. Connect the signal cable connector (TU-P1) 2 to connector (TU-J1) 5 located on the right side of the opening in front of drive. Ensure retention springs are latched on housing.

__ 3. Thread the power cable 3 (P6 connector end) through the baseplate opening 1 and in front of the signal cable 2.

__ 4. Connect the power cable connector (P6) 3 to connector (J6) 4 located on the bottom of the opening in front of drive.

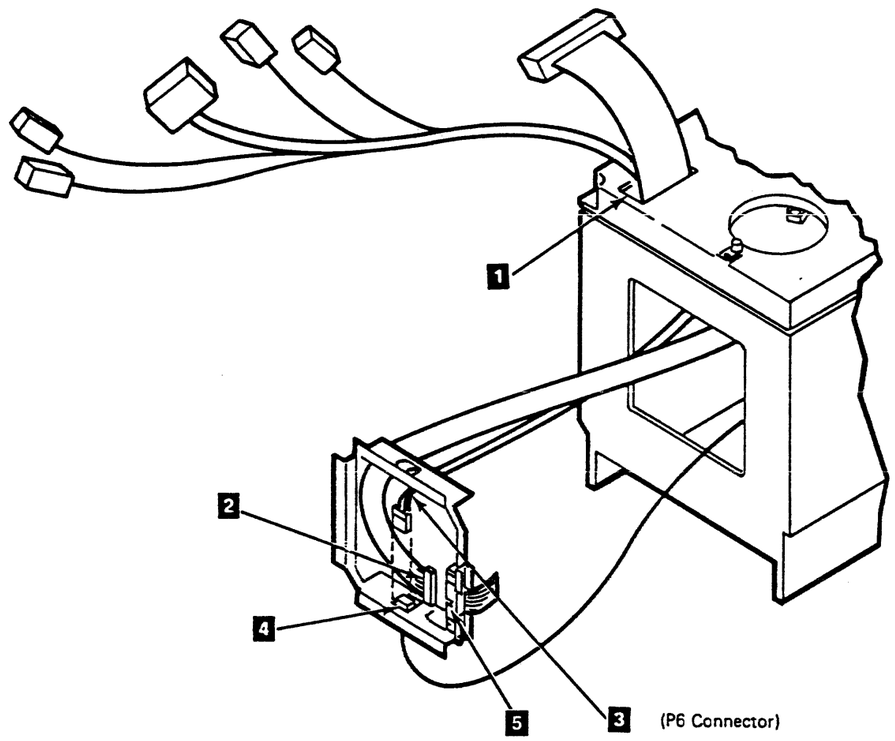

Power Adapter Cable

Installation Instructions (continued)

Install the Automatic Cartridge Loader

CAUTION:
Do not remove tape and/or wire ties from cables that are fastened to the rear side of the automatic cartridge loader assembly until the automatic cartridge loader mechanical assembly is fastened to the loader assembly. The tape and/or wire ties hold the cables so they will not be damaged during installation.

When installing the automatic cartridge loader mechanical assembly, carefully position the assembly to prevent damage to the cover seals.

CAUTION:
Some parts handled during this procedure are sensitive to electrostatic discharge (ESD). See CARR-TCU 1-9 for "Instructions for working with ESD-SENSITIVE PARTS"

CAUTION:
Before doing Step 1, verify that the two isolating bushings 1 are installed on the front of the loader assembly 2, and the three isolating bushings 5, are installed on the rear of the automatic cartridge loader assembly 4. ESD and RFI problems will occur after installation if the bushings are not in place or have been damaged.

While installing the automatic cartridge loader mechanical assembly in the next step, carefully position it to prevent damage to the cover seals.

__ 1. Carefully lift the automatic cartridge loader, 4 shipped with this BOM, on the loader assembly, 8, ensuring that the isolating bushings 1, and 5 are in place and not damaged.

__ 2. Place the support bracket 6 so it is located over the front top surface of the loader assembly 8. The bracket provides support for the automatic cartridge loader mechanical assembly during installation.

Note: In the next step, the bottom of the automatic cartridge loader mechanical assembly is similar to the drive drawer cover and can be held by either two screws, or by two pins. If the drive has pins, go to Step 3. If the drive has screws, go to Step 5.

__ 3. From the front of the loader assembly, guide the bottom cover pins into the holes of the bottom cover 16, while at the same time lifting from the bottom and guiding the automatic cartridge loader mechanical assembly on to the locating pins 3 on the front of the loader assembly.

__ 4. Go to Step 6.

__ 5. From the front of the loader assembly, and holding at the bottom, guide the automatic cartridge loader mechanical assembly on to the locating pins 3.

__ 6. Assemble three screws 10, lockwasher 9, flat washer 11, and isolating washer 12. Put assembled screws in a place where they can be easily accessed for use in the following steps. See the figure for assembly sequence order.

CAUTION:
Do not over tighten the screws in Steps 7 or 9 while installing the automatic cartridge loader mechanical assembly. Over tightening the screws will crack the isolating washer.

__ 7. From the rear, while holding the automatic cartridge loader mechanical assembly in place, fasten it to the loader assembly 8, at location 7 using two screws 10 (screws were assembled in Step 6).

__ 8. Remove the two screws and lock washers 15 that secure the tray 14. Set the tray, mounting screws and lock washers to the side for later installation.

__ 9. From the front of the drive, install one screw 10 at location 13. (Screw was assembled in Step 6).

__ 10. Continue on the next page.

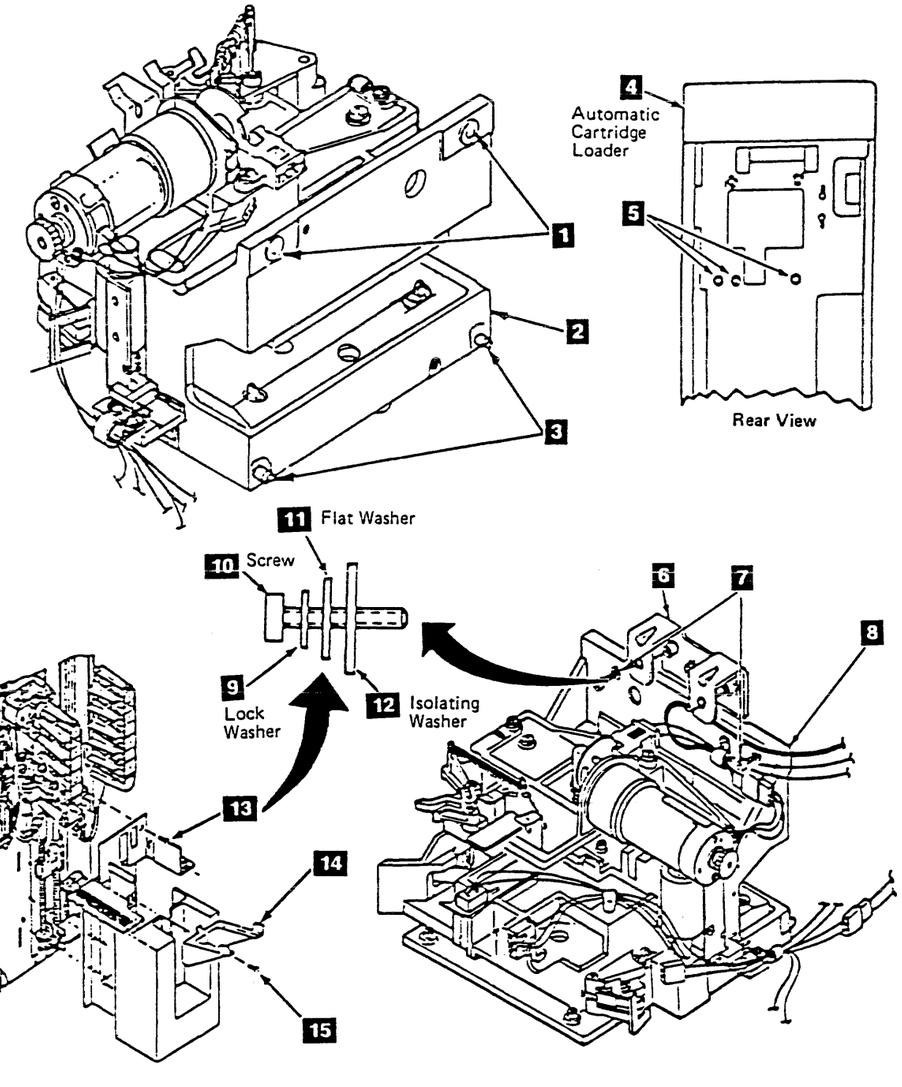

Installation Instructions (continued)

11. Connect "P" 6 connector to the loader assembly motor connector 5.

12. Connect "B" 2 connector (B label side down) to the loader assembly motor complete sensor connector 1.

13. Remove cable clamp 3 and route loader assembly motor drive cable 4 and motor complete sensor cable 2 through the cable clamp.

14. Route excess loader assembly motor drive cable 4 behind the support bracket then install the cable clamp 3 (See the Figure for correct cable routing.)

15. Connect "A" 13 connector to the loader assembly feed complete sensor 12.

16. Remove the file protect switch cable clamp 10 then route the loader assembly feed complete cable 11 through the cable clamp and reinstall the cable clamp.

17. Verify the cables are properly routed to ensure the cables will not be damaged by the loader assembly mechanism, automatic cartridge loader mechanism or covers.

18. Remove cable clamp 8 from the cartridge latched sensor then route the file protect switch cable 7, feed complete sensor cable 11, and cartridge latched sensor cable 9 through the cable clamp and reinstall the cable clamp.

    Note: There is only one wire used in the in the "P5/J5" connector. Plug as keyed in the following step. The second wire is used on tape transport units without the automatic cartridge loader feature.

19. Connect "P5" 26 connector to the cartridge latch solenoid connector "J5" 25.

20. Connect the power cable connector "P3" 29 to the card connector "J3" 24.

21. Open the front cover 14 by loosening the two fasteners 15 one-fourth turn, then swing the cover up.

22. Open the card gate 21 by loosening the one-fourth turn fastener 20 and swing the card gate outward to allow access to the rear of the card.

23. Route the signal cable 27 installed on INST 950, through the top rear of the automatic cartridge loader mechanical assembly 22 to card connector "J1" 31.

24. Connect the signal connector "AL-P1" 27 to the card connector "J1" 31.

25. Close card gate 21 and tighten the one-fourth turn fastener 20.

DANGER

> **Check the connectors and terminals to ensure they are matched. You could injure yourself and damage the machine when powering up the tape unit if the connectors and terminals are not matched when doing the next step.**

26. Connect the power cable connectors 28 and 30, (numbered 1,2,3,4) to the matching numbered fuse connectors 23. Ensure that the power cable connectors (numbered 1,2,3,4) are connected to the matching numbered fuse connectors.

    Note: Verify the cables are properly routed to ensure the cables will not be pinched by the load assembly mechanism, automatic cartridge loader mechanism or covers.

27. Close the front cover 14 and latch it by tightening the fasteners 15.

28. Replace the tray removed in Step 8, INST 960.

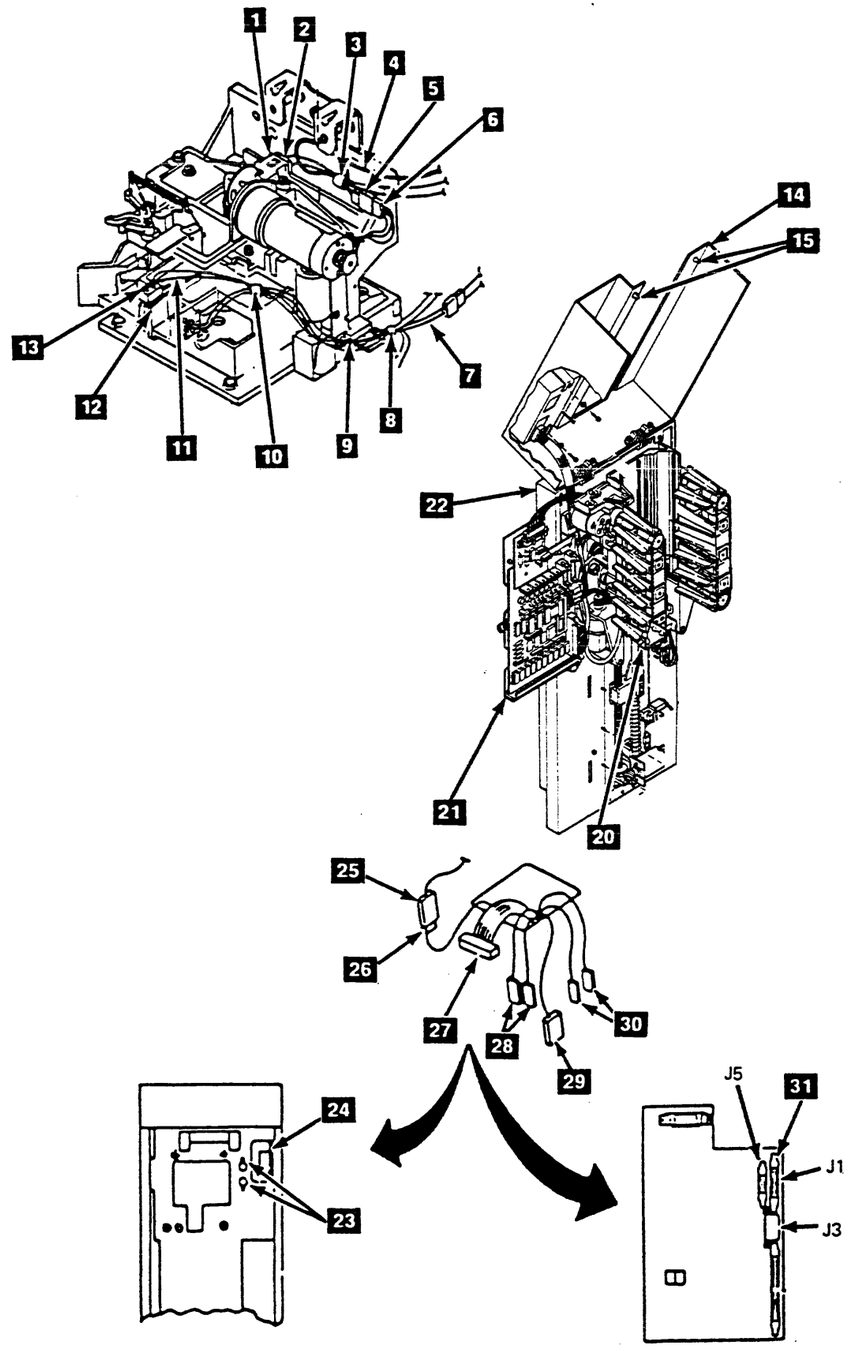

Install Automatic Cartridge Loader (Continued)

Installation Instructions (continued)

Install the Drive Clear Plastic Cover

__ 1. Replace the clear plastic cover . (See CARR-DR 2-5.)

__ 2. Close the drive drawer.

__ 3. Set the Drive Power switch to On.

__ 4. Set Online/Offline switch to Online.

__ 5. Return to Section "Details Of Installation," on INST 910 Step 2, if this is the first automatic cartridge loader installed and install the automatic cartridge loader on the other drive.

__ 6. Go to "Test Procedure".

Test Procedure

Note: Both drives in this tape transport unit should be updated prior to testing. Ensure that you test both drives.

__ 1. Set the loader switch to Auto.

__ 2. Insert six cartridges and press Start. The first cartridge should load. After the load completes,

__ 3. Unload the drive. The first cartridge should unload, drop down, and the second cartridge should load.

__ 4. Repeat for all six cartridges.

If error code E701 occurs, go to "Check Latch Solenoid Cable," otherwise, go to step 5.

__ 5. Close the front cover.

__ 6. Return the drives just tested to the customer.

Check Latch Solenoid Cable

You are here due to error code E701 occurring during final test procedure. Wires one and two in the "P4" connector are not correctly installed. Do the following steps to correct:

__ 1. Reverse wire 1 (one) and 2 (two) in the power amplifier board connector P4 **1** using pin removal tool to extract pins from the connector.

__ 2. Ensure that pin latches (tabs on side of pin) are reformed to approximately 30 degree angle to ensure that pins will be securely latched when reinstalled into the connector.

__ 3. Return to "Test Procedure"

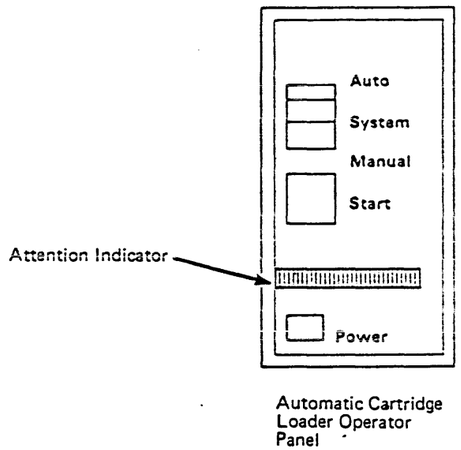

Automatic Cartridge Loader Operator Panel

TU-DO/1-PA
Power Amplifier Board Connectors

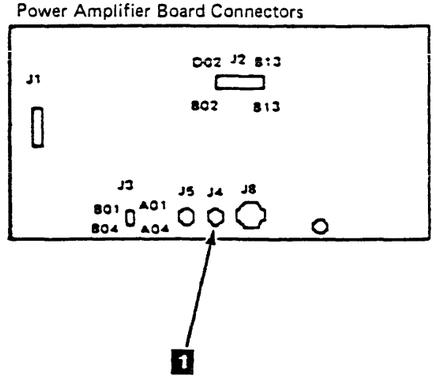

Contents

Contents

General Instructions 10
Needed Materials 10

Inspection Procedures 15
Preparation 15
Tape Transport Unit and Tape Control Unit Outside 15
Tape Transport Unit Inside 20
Tape Transport Unit – DC Power Supplies 32
Tape Transport Unit Inside – Miscellaneous 32
Tape Control Unit Inside 35
Tape Control Unit – AC Primary Power 40
Tape Control Unit – DC Power Supplies 45
Tape Control Unit Inside – Miscellaneous 55
Powered Off with Power Cable Disconnected 55
Safety ECs 55
Power Off and On 55
Automatic Cartridge Loader 56

AC Grounding Diagram (Tape Control Unit 50 Hz and 60 Hz) 65

AC Grounding Diagram (Tape Transport Unit and Drive 50 Hz and 60 Hz) 70

Contents INSP 1

Notes INSP 2

Notes INSP 2

General Instructions

General Instructions

This safety checklist is to ensure that a machine that has not been under a service contract has the necessary safety items installed and that no other changes were made that would make it unsafe. Each machine, as it was designed and assembled, had needed safety items installed to protect the owners, operators, and service personnel from injury. This checklist verifies only those items.

This checklist should be performed before the normal inspection for a service contract. **The machine should be suspected to be unsafe and you should think it unsafe until you verify that it is safe.** If any unsafe conditions are present, you must decide how serious the hazard could be and whether you can continue without first correcting the problem.

Think about these conditions and the safety hazards they present:

- Electrical, especially primary power, for example: an electrically charged frame can cause serious or lethal electrical shock.
- Explosive, for example: damaged or expanding capacitors can cause serious injury.
- Mechanical hazards, such as a cartridge latch assembly cover missing, can cause injury to the body.

Some of the pages are for features and need not be checked if the features are not installed on the machine.

Needed Materials

The following items are needed or will be useful during the inspection.

- Logic/wiring diagrams
- Parts catalog
- Machine history

Inspection Procedures

Note: See INSP 15 and INSP 16 for the following locations.

Preparation

CAUTION: TILT HAZARD

Do NOT open both drives of a tape transport unit that is not bolted on to another tape transport unit or tape control unit. With the automatic cartridge loader feature installed and both drive drawers fully extended, a tape transport unit that is not bolted to another unit will tilt forward with about 20 lbs. of force applied to the top of either automatic cartridge loader.

Start the checklist with the machine powered off and with all electrical power removed from the machine.

1. Power off the subsystem.
2. Have the customer open the CB/CP (circuit breaker/circuit panel) to the outlet supplying power to the subsystem.
3. Check the customer's plug housing to building ground.
   - There should be no voltage present.
   - Resistance should be less than 0.1 ohm.
4. Unplug the power cable.
5. Unplug the STI cables from the tape control unit. See LOC 1.
6. Disconnect the read/write bus connectors and the thermal connector 1, and the ac power connector 2, between the Tape Control Unit and the first tape transport unit and between all the tape transport units.
7. Check that there is no equipment plugged into any of the convenience outlets in the tape control unit. They are located on the left front of the ac power supply CU-PS-01.
8. Obtain the items that are needed or will be useful before starting the inspection.

Tape Transport Unit and Tape Control Unit Outside

Powered off with power cable and system attach cables disconnected.

On the Tape Transport Unit:

Check and Correct As Needed

1. That the machine is stable, that there are no defective casters or pedestals.
2. That the caster lock thumbscrews are in the two rear casters 7.
3. That all hinges and latches are in acceptable operating condition, not broken or corroded.
4. That the tape transport unit displays rotate without binding and the mechanical stops are not broken 3.
   Note: The displays have detented stop positions.

On the Tape Control Unit:

Check and Correct As Needed

1. That the machine is stable, that there are no defective casters or pedestals.
2. That the caster lock thumbscrews are in the two rear casters 4.
3. That all hinges and latches are in acceptable operating condition, not broken or corroded.
4. That the ac mainline cord does not have frayed or damaged wiring at the plug end 5.
5. That the power cable is 10 gauge, 4 wire for 60 Hz and 50 Hz Japan, or 10 gauge 5 wire for other 50 Hz machines.
   - If the power cable is not marked, measure the diameter of a wire in the cord with the insulation removed. The diameter of a 10-gauge wire is 2.588 millimeters (0.102 inches).
6. That the power plug type is R&S* 3760 6 (60 Hz only). This plug will mate with the R&S 3754 receptacle.
7. That the power plug type is Hubbell connector 532P6W (Digital P/N 12-14379-06) (50 Hz only). This plug will mate with the Hubbell receptacle 532R6W (Digital P/N 12-14378-06).

* R&S is Trademark of Russell & Stoll

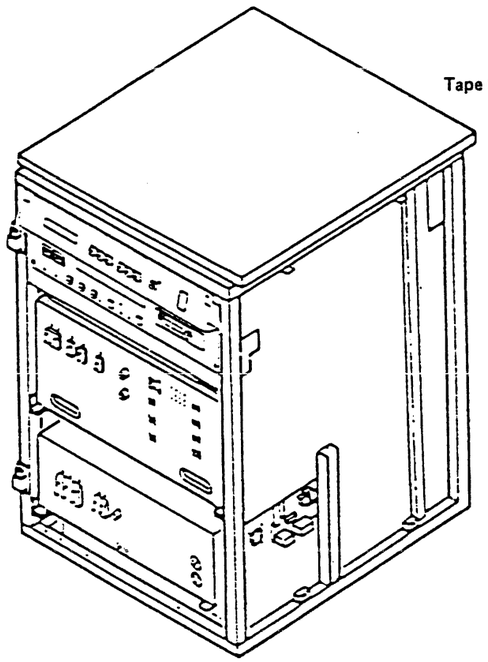

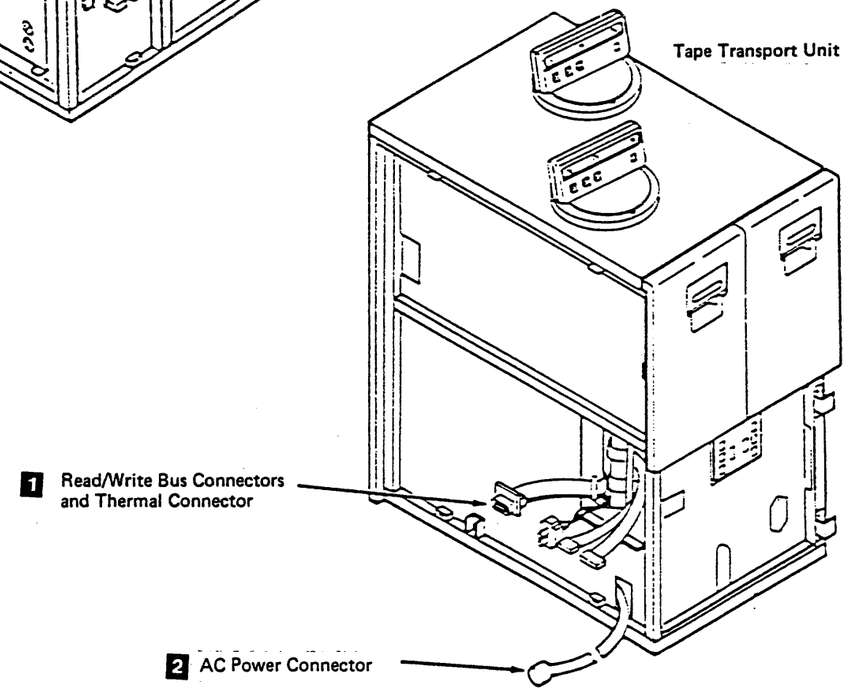

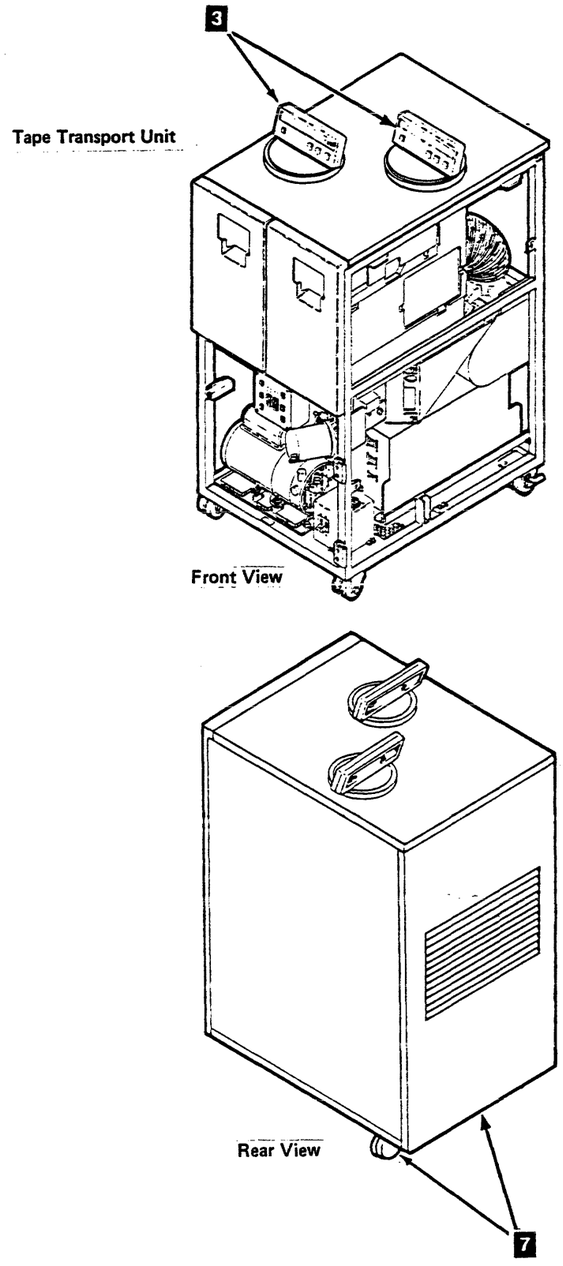
3
Tape Transport Unit
Front View
Rear View
7

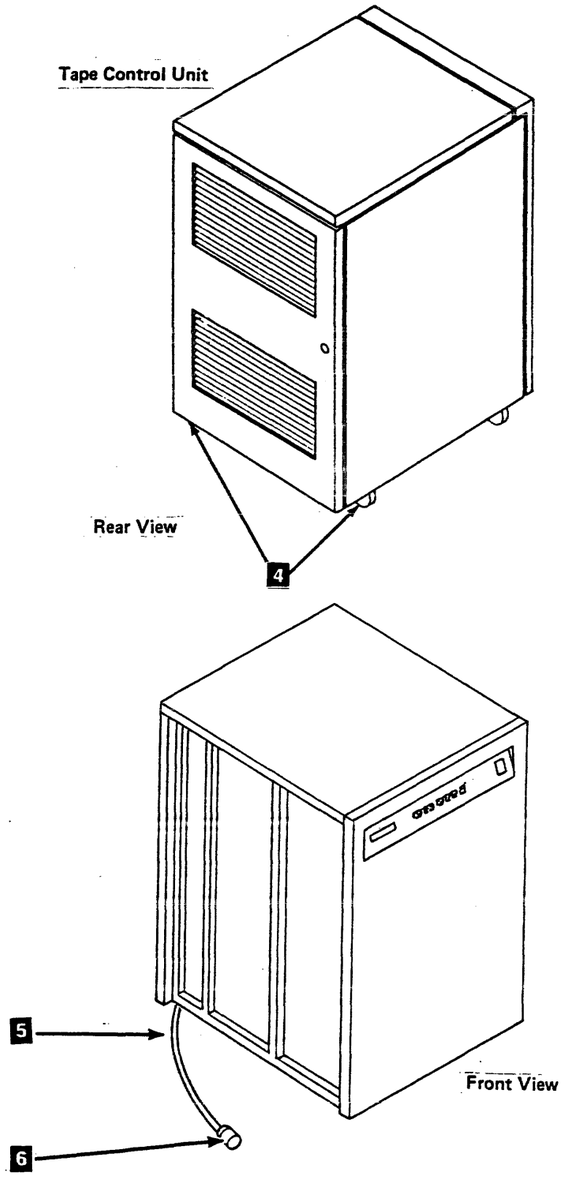
Tape Control Unit
Rear View
4
5
6
Front View

Inspection Procedures (Continued)

Note: See INSP 21 for the following locations.

Tape Transport Unit Inside

Powered Off with Power Cable Disconnected

Check and Correct As Needed

1. That all ground jumpers (normally green/yellow) are tightly attached by frame ground screws 8.
2. That all grounded metal has good ground continuity (less than 0.1 ohm) - covers, housings, metal box sides, and so on.
3. That all hinges and latches are in acceptable operating condition - not broken or corroded.
4. That all normal safety covers (operator and service areas) are in place including those protecting mechanical devices and hot surfaces - no sharp corners or edges should be unprotected.
   a. The ac CB1 safety cover is correctly in place 3.
   b. The ac power cap is present for each tape transport unit and securely attached to the safety cover 4.
   c. The logic board 02A-A1 covers (pin and card side) are in place 6.
   d. The drive and tape path safety cover is in place 1.
   e. The blower safety cover is in place 7.
   f. The ac terminal block cover is in place 2.
   g. The limited customer access covers are in place 5.

Inspection Procedures (Continued)

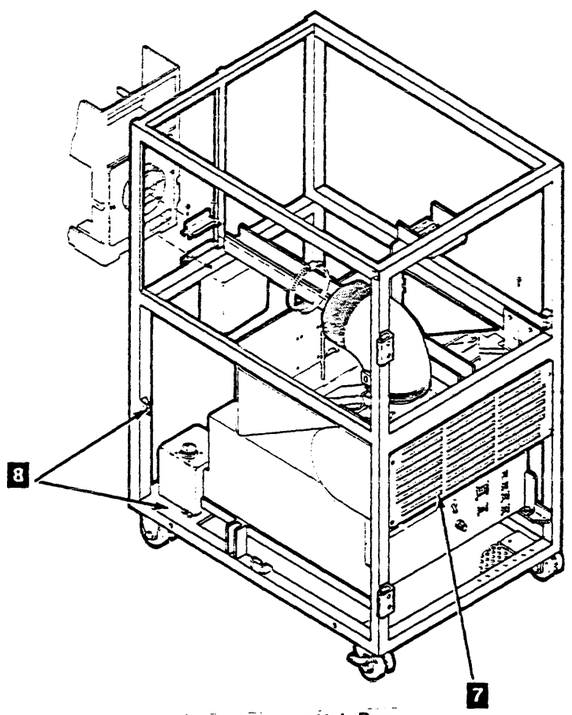

Tape Transport Unit Rear

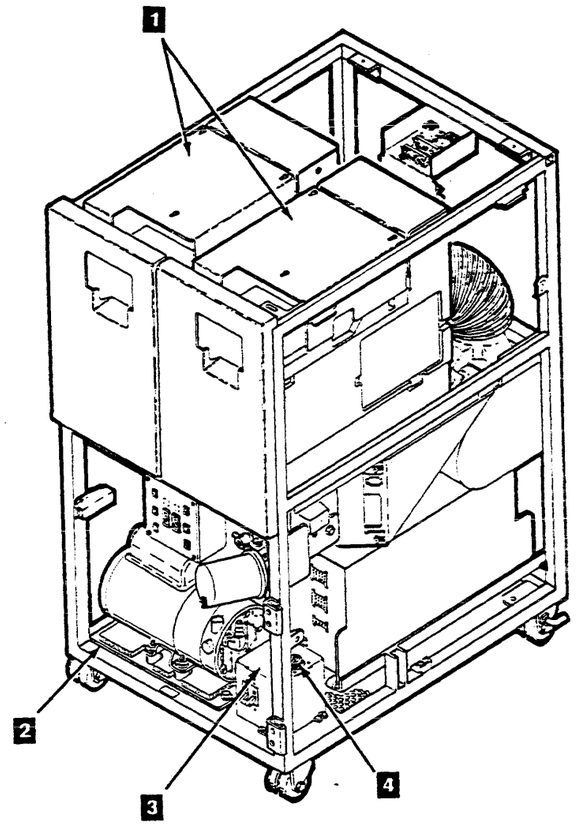

Tape Transport Unit Front

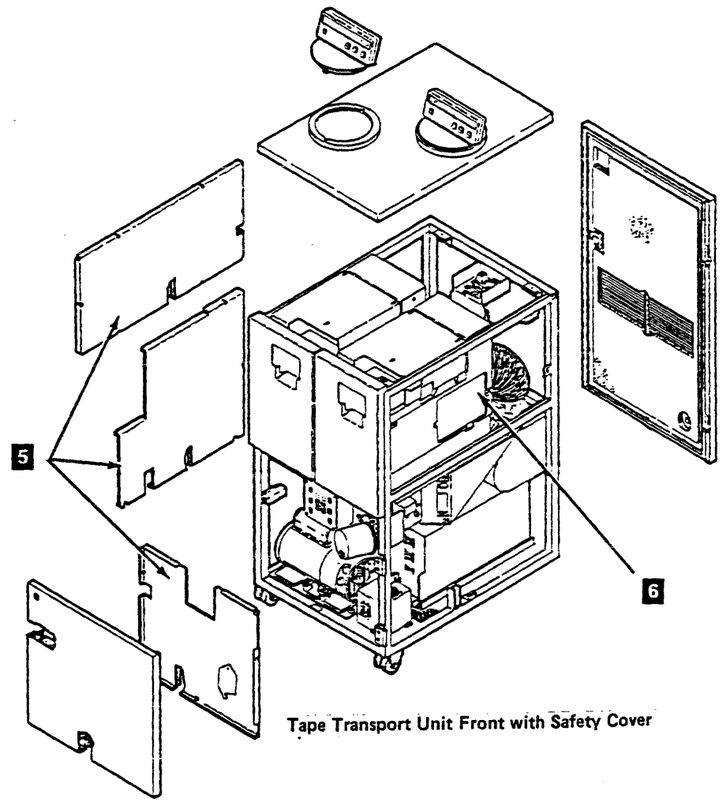

Tape Transport Unit Front with Safety Cover

Inspection Procedures (Continued)

Notes INSP 24

Notes INSP 24

Inspection Procedures (Continued)

Tape Transport Unit Inside (Continued)

Check and Correct As Needed

1. That all safety labels are located where indicated:

   a. That all labels reading "LINE VOLTAGE PRESENT WITH POWER OFF" are attached in the following locations:

      - Terminal strip at lower rear 1.
      - Main tape transport unit circuit breaker 3.

   b. That a label reading "Unit Weight 101 LB (46 KG)" is located on the dc power supply TU-PS-01 2.

2. That the thermal switches are not bypassed. See CARR-DR 1100 and CARR-DR 820 for a procedure to get access to the thermal switches.

3. No metal filings, dirt or contaminants, water or other fluids, or marks of earlier smoke or burning are present.

   If there are any marks of earlier smoke or burning, ensure the cause has been corrected before applying power to the unit.

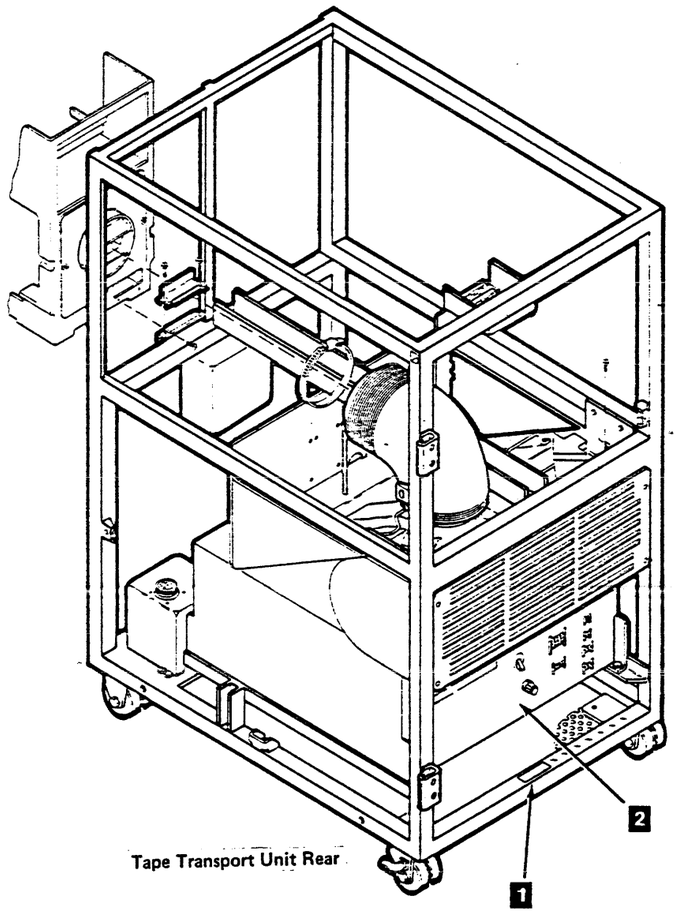

Tape Transport Unit Rear

Tape Transport Unit

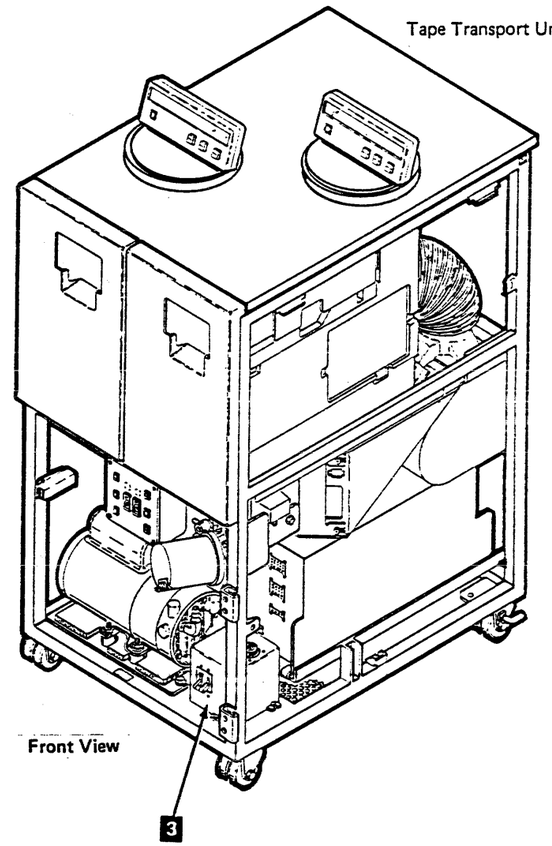

Front View

Inspection Procedures (Continued)

Tape Transport Unit-DC Power Supplies

Powered Off with Power Cable Disconnected

Check and Correct As Needed

1. That all power supplies are attached tightly. The dc power supply TU-PS-01 has two screws 1.
2. That all grounded metal has good ground continuity (less than 0.1 ohm) - covers, housings, metal box sides, and so on.
3. The power wiring for frayed or damaged wiring.
4. That the following ac/dc CBs and fuses are the correct size:

CB1	AC	Drive frame	10 A	
F1/2		Drive 0/1	12 A	Medium blow
F3/4		Drive 0/1	5 A	Long blow
F5/6		Drive 0/1	1 A	Long blow
F7/8		Drive 0/1	3 A	Long blow
F9/10		Drive 0/1	8 A	Medium blow
F11/12		Drive 0/1	.75 A	Immediate blow
F13/14		Drive 0/1	15 A	Medium blow
F15			2 A	Long blow

These values can be EC sensitive, so check the fuses and CBs against the machine logic.

Tape Transport Unit Inside-Miscellaneous

Powered Off with Power Cable Disconnected

Check and Correct As Needed

1. All cables, connections, plugs, and so on for frayed or damaged wiring.
2. All connections, plugs and so on for damaged latches and/or clamps.

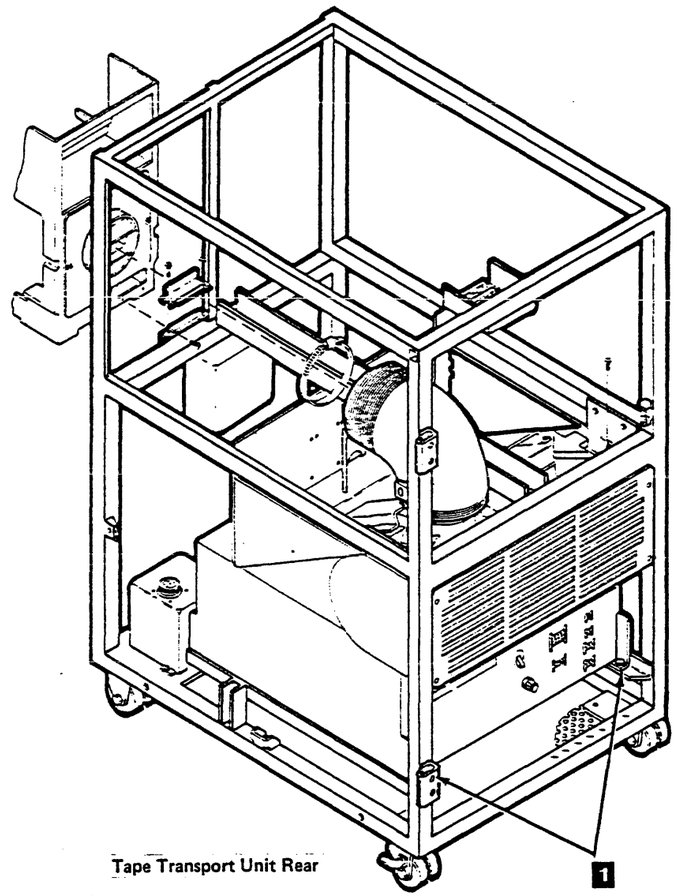

Tape Transport Unit Rear

Tape Control Unit Inside

Powered Off with Power Cable Disconnected

Check and Correct As Needed

1. That all ground jumpers (normally green/yellow) are tightly attached by frame ground screws 6. See INSP 65 for the AC grounding diagram.

2. That all grounded metal has good ground continuity (less than 0.1 ohm) - covers, housings, metal box sides, and so on.

3. That all hinges and latches are in acceptable operating condition - not broken or corroded.

4. That all normal safety covers (operator and service areas) are in place including those protecting mechanical devices and hot surfaces - no sharp corners or edges should be unprotected.

   - The logic gate card covers (A1, A2) are in place 8.
   - All three gate DC voltage strip (TB) covers are in place 1.
   - The AC safety cover is in place 4.
   - Both limited customer access covers are in place 5.

5. That all safety labels are located where indicated.

   - Labels reading, "Hazardous Area, etc..." must be located on the frame members at 3 and 9.

6. Mark the customer's circuit breaker/circuit panel (CB/CP) number for the circuit controlling AC power to subsystem at CB1 (main line CB) 2 and on the main line power cable plug.

7. That the thermal switches are not bypassed. These are located at the top and the bottom of 01-A gate and on the STI (O1B) gate. See CARR-TCU 1430 for a procedure to get access to the 01-A gate thermal switch, and CARR-TCU 9050 for the 01-B (STI) gate switch.

8. That no obvious non-Digital ECO changes have been made.

9. That the fan safety screens on the fans on the bottom of the A1 gate are in place 7.

10. That drip screen-guard 10 is in place.

11. That no metal filings, dirt or contaminants, water or other fluids, or marks of earlier smoke or burning are present.

12. If there are marks of earlier smoke or burning, ensure the cause has been corrected before applying power to the unit.

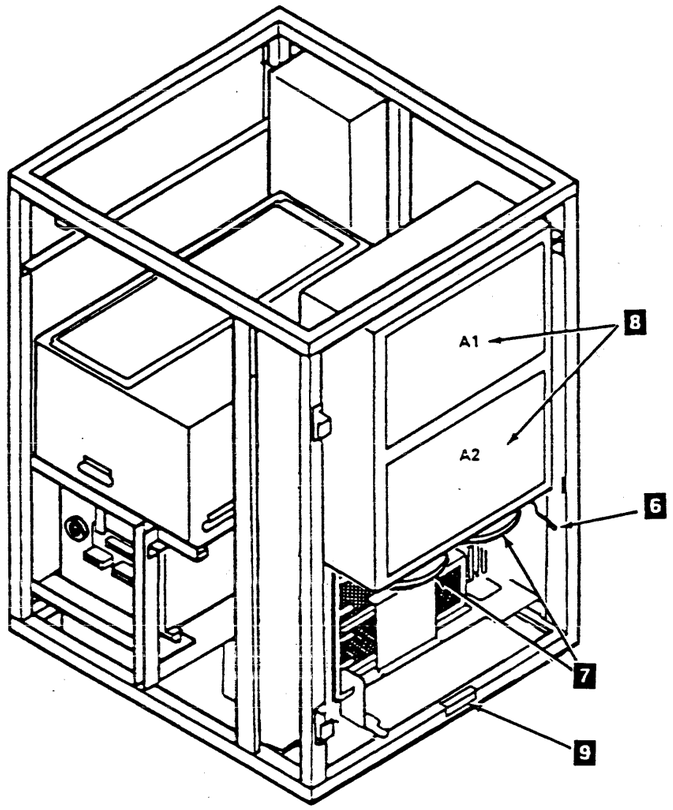

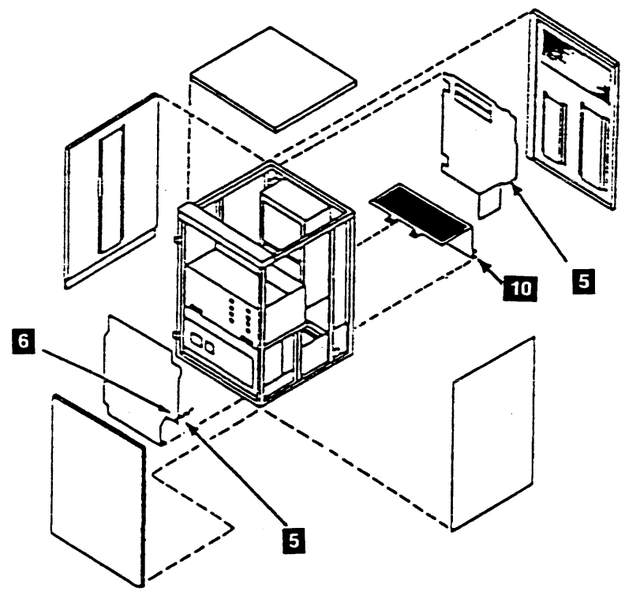

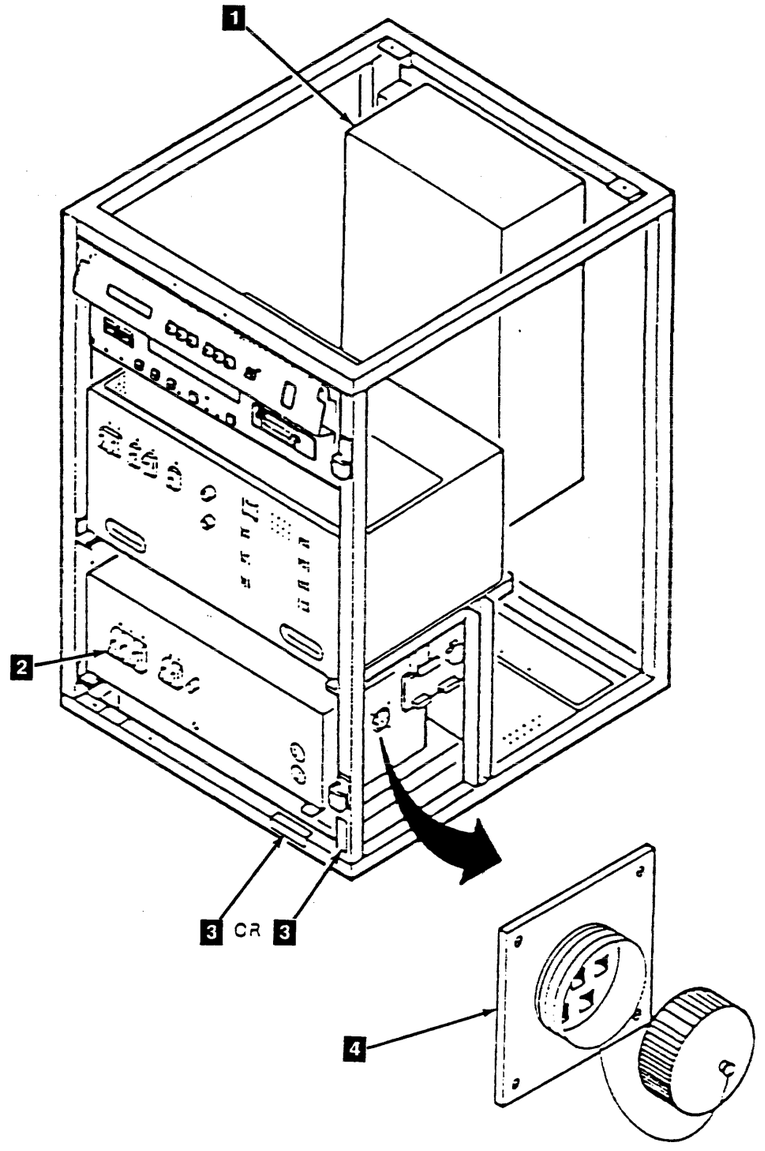

Inspection Procedures (Continued)

Note: See INSP 40 and INSP 41 for the following locations.

Tape Control Unit – AC Primary Power

Powered Off with Power Cable Disconnected

Check and Correct As Needed

1. That the ac power supply is attached in place tightly. The power supply has two mounting screws 1.
2. That all ground jumpers (normally green/yellow) are strongly attached by frame ground screws 3. The system attach ground wires are not present if feature is not installed.

   To check the shield ground of the power cable, you must remove the left side safety cover 4 and the ac input filter cover on the power supply 5. Leave these covers off, you will need to return to this area later.
3. That all grounded metal has good ground continuity (less than 0.1 ohm) - covers, housings, metal box sides, and so on.
4. That the ac mainline cord has no frayed or damaged wiring at the ac power supply CU-PS-01 6.
5. That all ac service outlets are safe 2. Measure from ground pin to frame. The resistance should not be more than 0.1 ohm.

   Note: That the service outlets are for temporary use of service equipment only.
6. The resistance from the line cord ground pin and housing to all frames and to all power assembly grounds as follows:
   - Line cord ground pin to frame ground.
   - Line cord housing to frame ground.

   The resistance should not be more than 0.1 ohm.
7. The resistance from the frame ground to DC ground at:
   - TB1-5
   - TB1-6
   - TB1-7
   - TB1-8
   - TB2-5
   - TB2-6
   - TB2-7
   - TB2-8

   and to the ground pin on:
   - Logic board 01A-A1D2D08
   - Logic board 01A-A2D2D08

   The resistance should not be more than 0.1 ohm.
8. That all ac/dc CBs and fuses are the correct size:

50 Hz	CB1	AC	Main Line	25 A
	CB2	AC	Conv.	5 A
	CB3	AC	24 V	1 A
	F1	DC	24 V	5 A Long Blow
60 Hz	CB1	AC	Main Line	25 A
	CB2	AC	Conv./24 V	5 A
	CB3	AC	Conv.	7 A
	F1	DC	24 V	5 A Long Blow

These values can be EC sensitive, so check the fuses and CBs against the machine logic.

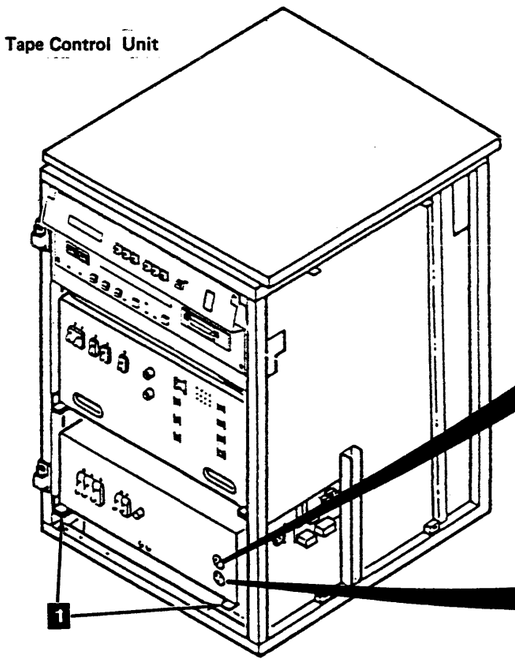

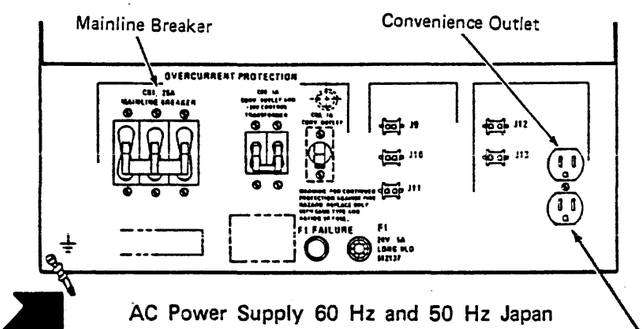

AC Power Supply 60 Hz and 50 Hz Japan

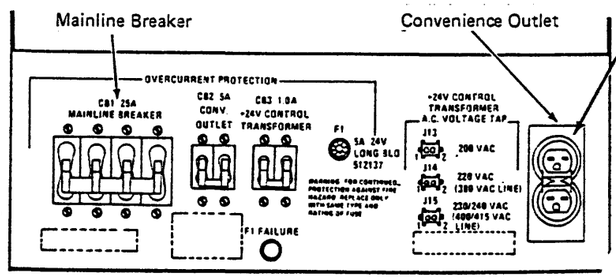

AC Power Supply 50 Hz (Except Japan)

2

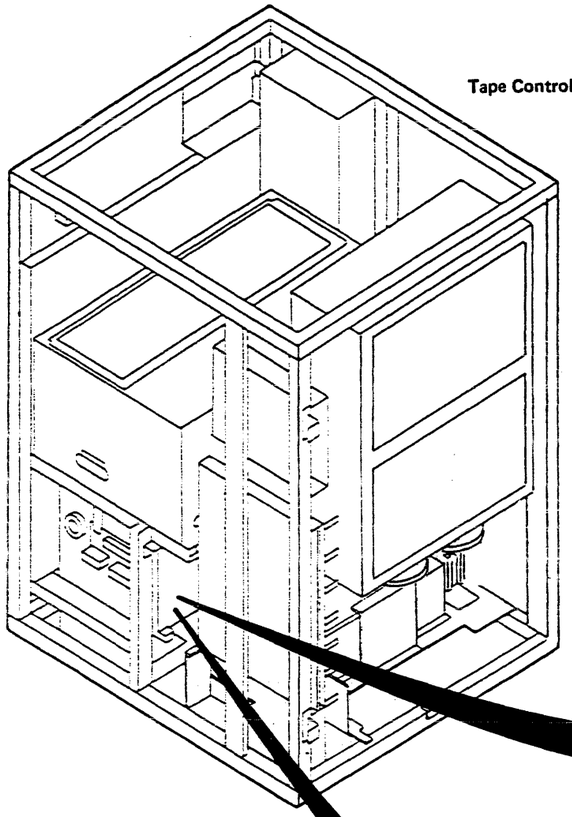

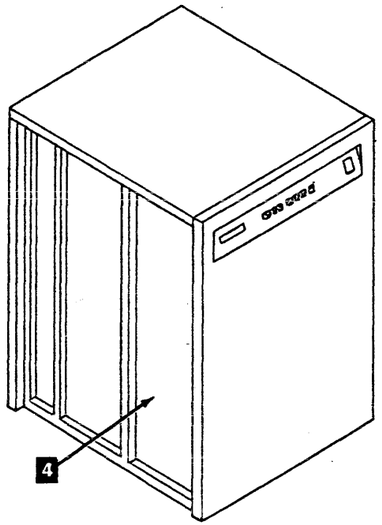

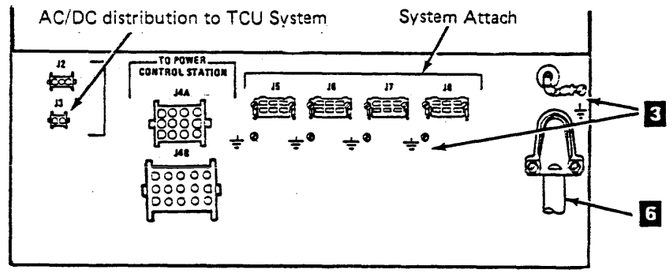

AC Power Supply 60 Hz and 50 Hz Japan

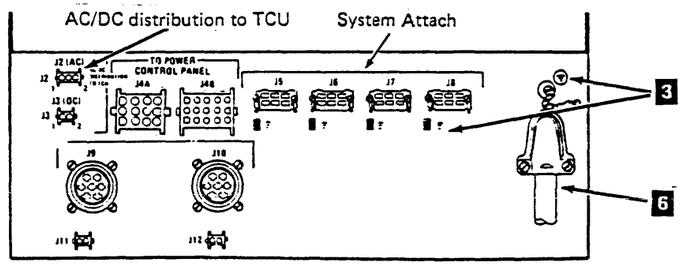

AC Power Supply 50 Hz (Except Japan)

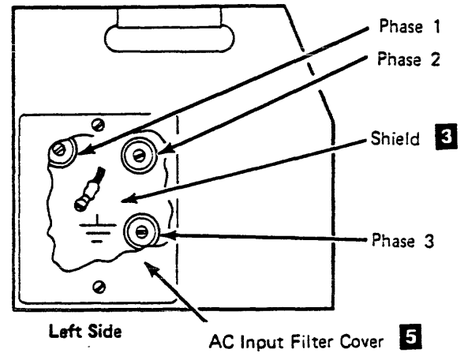

60 Hz, and 50 Hz Japan

Tape Control Unit Left Front with
Access to AC Power Supply Left Side

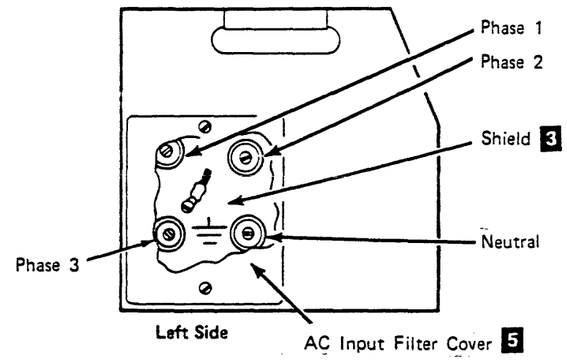

50 Hz, Except Japan

Tape Control Unit Left Front with
Access to AC Power Supply Left Side

Inspection Procedures (Continued)

Tape Control Unit – DC Power Supplies

Powered Off with Power Cable Disconnected

Check and Correct As Needed

1. That all grounded metal has good ground continuity (less than 0.1 ohm) - covers, housings, metal box sides, and so on.
2. All power wiring for frayed or damaged wires.
3. That the dc power supply is attached in place tightly. The power supply has two mounting screws **1**.
4. That the STI dc power supply (PS03) **2** is attached in place tightly.
5. That all ac/dc CBs and fuses are the correct size:

CB1	AC		10 A
CB2	DC	+5 v	65 A
CB3	DC	+5 v	45 A
CB4	DC	-5 v	12 A
F1		+8.5 v	5 A medium blow
F2		+ 24 v	2 A long blow

These values can be EC sensitive, so check the fuses and CBs against the machine logic.

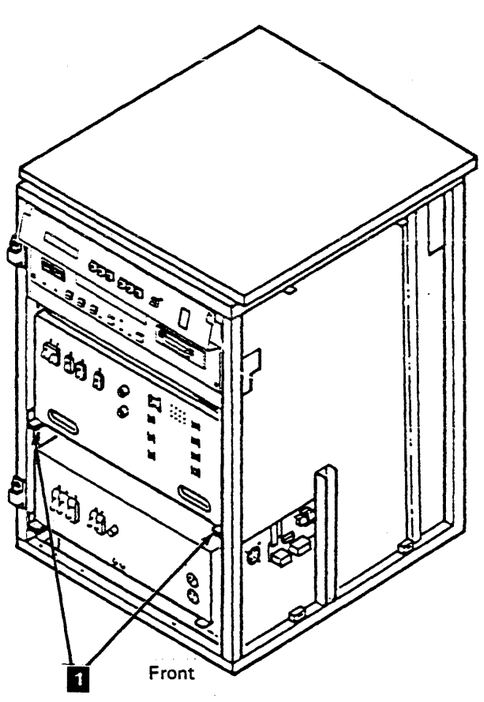

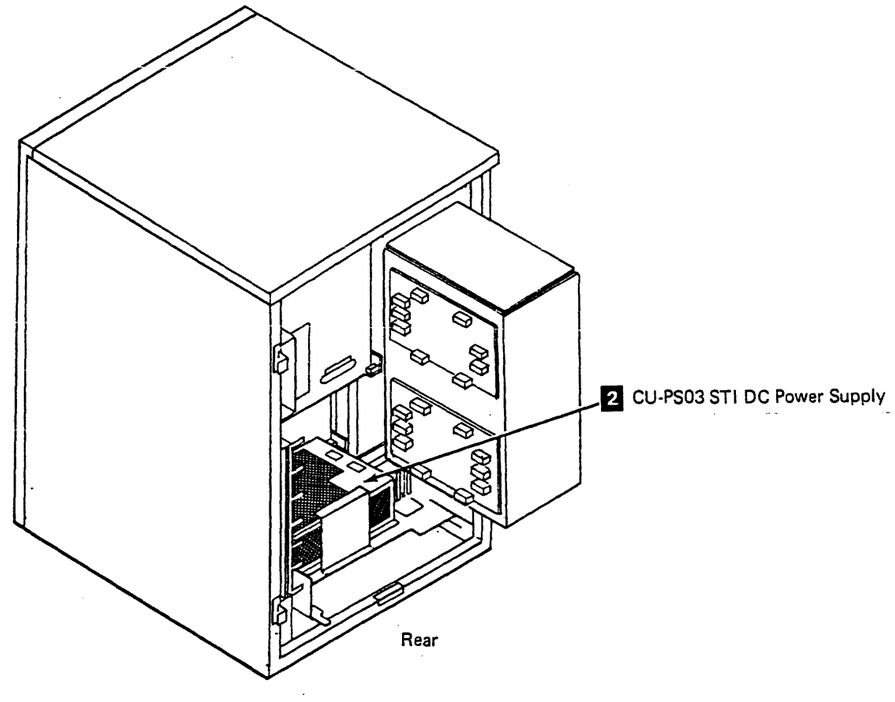

Inspection Procedures (Continued)

Tape Control Unit Inside – Miscellaneous

Powered Off with Power Cable Disconnected

Check and Correct As Needed

1. All cables, connections, plugs, and so on for frayed or damaged wiring.
2. All connections, plugs, and so on for damaged latches and/or clamps.

Power Off and On

1. Check the customer plug housing to the ground pin. There should be no voltage present and the resistance should be less than 0.1 ohm.
2. Set CB1 off and plug in the power cable.
3. Have the customer close the CB/CP (circuit breaker/circuit panel) that supplies the outlet to which the subsystem is attached.
4. Does machine power label **2** match customer power? Measure with the volt/ohm meter at the ac input filter **1**.
5. Have the customer open the CB/CP that supplies the outlet to which the subsystem is attached and unplug the power cable.
6. Reinstall the covers over the ac input filter.
7. Reinstall all covers and set CB1 off and plug in the power cable.
8. Have the customer close the CB/CP to the outlet that supplies the subsystem.
9. Turn ac CB1 and the Unit Emergency Power Off switch on, and put the Local/Remote switch in the Local position. Depress Local Power Enable to restore power.
10. With power up, ensure that the machine will power down with the Unit Emergency switch.
11. Reset the Unit Emergency switch. Depress Local Power Enable to restore power.

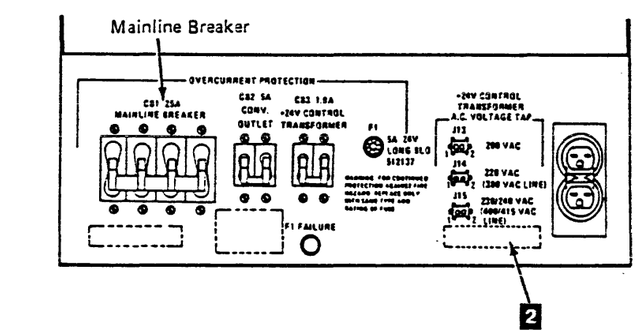

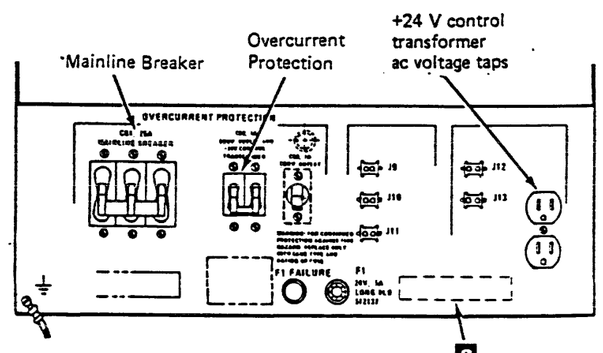

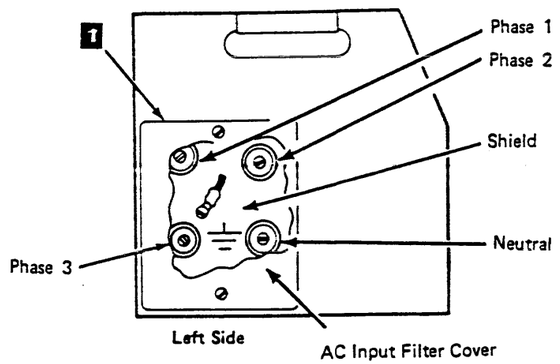

Tape Control Unit AC Power Supply 50 Hz (Except Japan)

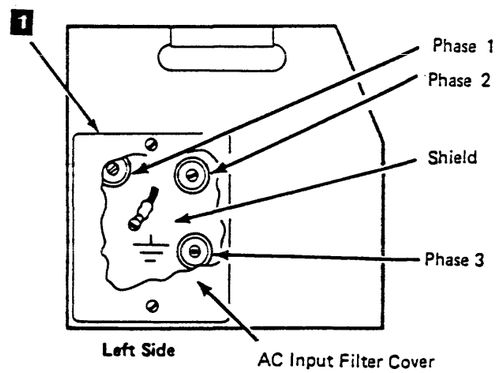

Tape Control Unit AC Power Supply 60 Hz, and 50 Hz Japan

Inspection Procedures (Continued)

Automatic Cartridge Loaders

Check and Correct As Needed

- That the lower automatic cartridge loader safety cover is in place 1.
- That all components are mounted correctly and all cable clamps are installed.
- Inspect all cables, connectors, and plugs for frayed or damaged wiring.
- Inspect all connections and plugs for damaged latches and/or clamps.
- Inspect the automatic cartridge loader base plate for correct installation of the fuse labels 2.
- That the two fuses are the correct value as shown on the labels 2 on the automatic cartridge loader base plate.
  - F1 +24 V dc 1.6A Slow Blow
  - F2 +5 V dc 5A Instantaneous Blow.

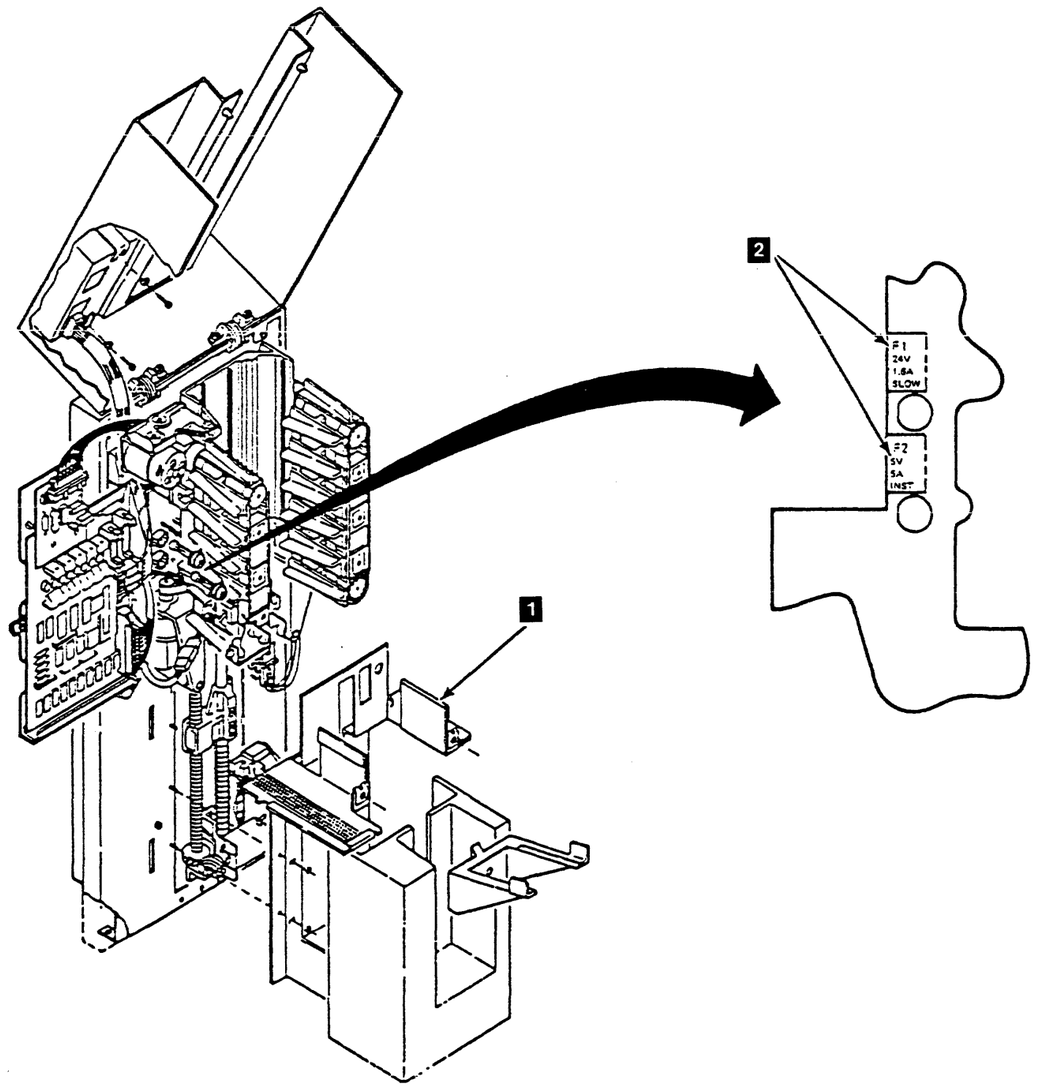

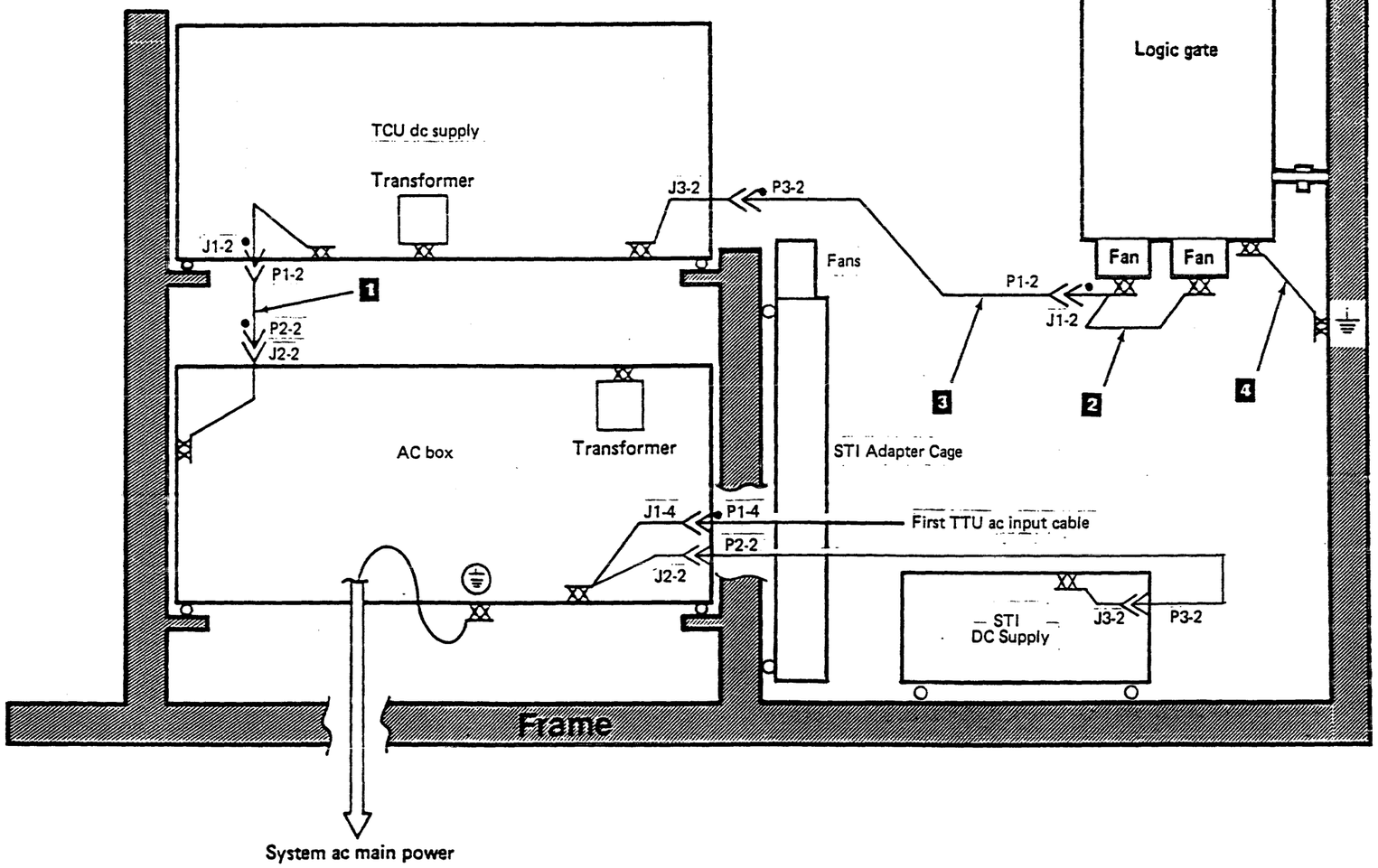

Notes:

1. All wires shown are green/yellow.
2. Blocks are for adjacent frame attachment. They are used for frame ground and stability.

ITEM	DESCRIPTION	AWG
1	AC-24V DC C/A	14
2	Cont. gate fan C/A	18
3	Cont. AC fan C/A	18
4	Jumper	18

Legend

- External tooth lockwasher/starwasher
- Metal to metal with self tapping screws
- Welded connection
- Connector with grounding pin
- Tapped holes for screw attachment
- Double crimp
- JX-X Ground pin in connector

AC Grounding Diagram (50 Hz Tape Transport Unit and Drive)

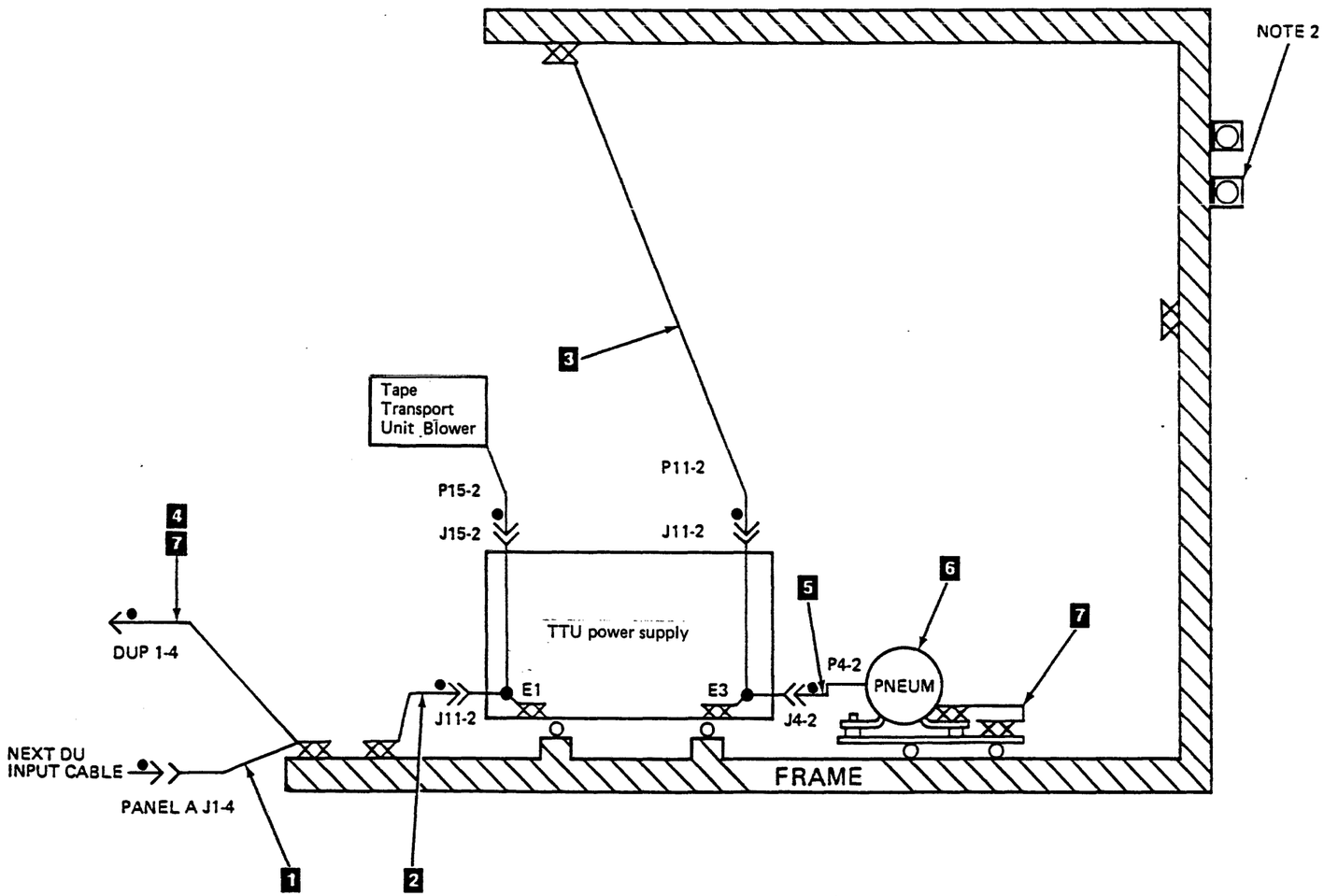

Notes:

1. All wires shown are green/yellow.
2. Threaded block for adjacent frame attachment, frame ground and stability.

ITEM	DESCRIPTION	AWG
1	A/C Input cable Asm 60 and 50 Hz Japan	12
1	A/C Input cable Asm 50 Hz WTC	12
2	Power supply A/C input cable assembly	14
3	A/C box assembly, 60 and 50 Hz Japan	N/A
3	A/C box assembly, 50 Hz WTC	N/A
4	Ground Jumper Asm	16
5	Cable Asm compressor	16
6	Pneumatic supply	N/A
7	Ground jumper Asm	16

Legend

XX	External tooth lockwasher/starwasher
C	Tapped holes for screws attachment
	Metal to metal self tapping screws
—	Weld
	Connector with ground pin
	Double crimp
JX-X	Ground pin in connector

AC Grounding Diagram (50 Hz Tape Transport Unit and Drive)

Special Characters

+1.7 V dc regulator, 01A-A1-T2 MAP 410 PWR 410-1
+24 V control transformer ac voltage taps location, tape control unit ac power supply LOC 55, LOC 60
+24 V control voltage
  diagram PWR 40
  local mode MAP 110 PWR 110-1
  MAP PWR 130-1
  remote mode MAP 120 PWR 120-1
+5 V dc (J5 through J12) locations, tape control unit dc power supply LOC 35
+5 V dc distribution diagram, tape control unit PWR 42
+8.5 V dc distribution diagram, tape control unit PWR 48
-5 V dc distribution diagram, tape control unit PWR 46

A

abbreviations GLOSS 1
ac grounding diagram
  tape control unit INSP 65
  tape transport unit INSP 70
ac input and output locations (J1 and J3), tape control unit dc power supply LOC 35
ac input filter cover location, tape control unit ac power supply LOC 55, LOC 60
ac line cord, tape control unit
  removal and replacement CARR-TCU 1490
ac power circuit breaker, drive
  description PANEL 15
  removal and replacement CARR-DR 2180
ac power supply
  ac power connector LOC 45
  cable, removal and replacement CARR-DR 750
  distribution diagram PWR 32
  jumper checks INST 56
  power off and on procedures CARR-TCU 6
  removal and replacement CARR-TCU 1440
  safety inspection INSP 40
  tape control unit
    local mode diagram PWR 36
    panel PWR 15
    remote mode diagram PWR 38
  50 Hz except Japan
    location LOC 60
    voltage tolerance table PWR 20
  60 Hz and 50 Hz Japan
    location LOC 55
    voltage tolerance tables PWR 20
ac/dc distribution location, tape control unit ac power supply LOC 55, LOC 60
action messages INST 5
adapter card
  clocks EAD 80
  introduction INTRO 50
  location, drive LOC 15, LOC 130
  logical components OPER 40
  switch setting procedure CARR-TCU 1189
adding tape transport units to an installed subsystem INST 135
additional tape transport unit installation INST 20
address and register selection chart, scope loop utility MD/SDISK 1100
address cross-reference tables, external register DF 5
address in line operation, channel to tape control unit interface OPER 190
address in line operation, tape control unit to drive interconnection OPER 190
address out line operation, channel to tape control unit interface OPER 190
address out line operation, tape control unit to drive interconnection OPER 190
address, sync (scope loop utility) MD/SDISK 1100
addresses, setting the
  drive PANEL 12
  drive, logical INST 50
  drive, physical INST 50
  tape control unit INST 40, PANEL 12
addressing
  external register OPER 65
  introduction INTRO 10
adjustments
  cartridge latched sensor CARR-DR 110
  file protect switch CARR-DR 90
  pressure regulator PNEU 5
  tach sensor A, after replacement CARR-DR 2250
  tach sensor B, after replacement CARR-DR 2260
  tach sensors A and B CARR-DR 40
  tape path sensor A CARR-DR 60, CARR-DR 120
  tape path sensor B CARR-DR 10, CARR-DR 40, CARR-DR 70
  vacuum PNEU 5
air fitting location, drive LOC 120
air pressure hose clamp, illustration of PLAN 6
air pressure loss analysis procedure
  air pressure loss PNEU 10
  pneumatic problem on a single drive PNEU 20
air pressure test hose assembly
  removal and replacement CARR-DR 2620
alert sequence from the drive to the tape control unit EAD 42
alert sequence, tape control unit to drive operation OPER 185
area of subsystem served by cable group, cable group list FSI 200, FSI 201
assembly
  feed CARR-DR 2950
  input stack CARR-DR 2900, LOC 171
  left input rail CARR-DR 2930
  load CARR-DR 2820, CART 17
  loader mechanical CARR-DR 2850, LOC 170, LOC 171, OPER 240
  output stack CARR-DR 2970, LOC 171
  right input rail CARR-DR 2940
assigned elsewhere sense bit SENSE 110
attaching additional tape transport units INST 20
attachment tool for leader block replacement, illustration of PLAN 6
attention indicator OPER 240, PANEL 40
attention status bit SENSE 205
automatic cartridge loader INSP 56, LGND 46, LGND 47, LGND 48, PANEL 40

B

bar LEDs (indicators) description PANEL 15
basic tape control unit test
  E010 description DIAG 2
  how to run MD/SDISK 530
basic tape motion test, diagnostic routine EEA2 DIAG 500
BCPH
  See buffer channel pointer high register
BCPL
  See buffer channel pointer low register
BCSE
  See buffer channel status and error register
BCSS
  See buffer channel SARS register
BDG0
  See buffer diagnostic 0 register
BDG1
  See buffer diagnostic 1 register
BDPH
  See buffer device pointer high register
BDPL
  See buffer device pointer low register
BDSE
  See buffer device status and error register
beginning-of-tape sense bit SENSE 110
block diagram
  dual tape control unit subsystem, theory INTRO 35
  single tape control unit subsystem, theory INTRO 25
  tape control unit theory INTRO 15
  tape transport unit theory INTRO 45
block ID position indicator for error recovery sense bit SENSE 110
blower assembly 1 and 2, tape control unit
  removal and replacement CARR-TCU 1500
blower assembly, drive
  location LOC 120
  removal and replacement CARR-DR 200
board and cable interconnection failures EAD 5000
branch circuits CB check INST 6, INST 306
buffer (local/remote) communication path from channel adapter OPER 140
buffer adapter card
  location LOC 15
  operation OPER 20
  removal and replacement CARR-TCU 1110
buffer adapter, cable group from channel adapter FSI 200
buffer area clocks EAD 20
buffer channel SARS (BCSS) bit definitions DF 20
buffer channel status and error register (BCSE) bit definitions DF 15
buffer control card
  clocks EAD 20
  location LOC 15
  operation OPER 20
  removal and replacement CARR-TCU 1110
buffer control external registers DF 5
buffer device pointer high register (BDPH) bit definitions DF 30
buffer device pointer low register (BDPL) description DF 30
buffer device status and error register (BDSE) bit definitions DF 20
buffer diagnostic 0 (BDG0) bit definitions DF 25
buffer diagnostic 1 register (BDG1) bit definitions DF 25
buffer memory reference CARR-TCU 7
buffer page 0, 1, 2, and 3, MD support diskette channel RAM display MD/SDISK 116
buffer registers
  buffer channel pointer high register (BCPH) DF 15
  buffer channel pointer low register (BCPL) DF 15
  buffer channel SARS register (BCSS) DF 20
  buffer channel status and error register (BCSE) DF 15
  buffer device pointer high register (BDPH) DF 30
  buffer device pointer low register (BDPL) DF 30
  buffer device status and error register (BDSE) DF 20
  buffer diagnostic 0 register (BDG0) DF 25
  buffer diagnostic 1 register (BDG1) DF 25
  buffer wrap register (BWRP) DF 30
buffer storage cards
  location LOC 15
  removal and replacement CARR-TCU 1110
buffer storage operation OPER 20
buffer wrap register (BWRP) bit definitions DF 30
buffer, data
  controls test, diagnostic routine EE33 DIAG 110
  data path test, diagnostic routine EE32 DIAG 100
  introduction INTRO 20
  operation OPER 20
buffered write mode INTRO 22, OPER 100
buffers 0 and 1, MD support diskette status store display MD/SDISK 121
bundled lines, how to read graphic format LGND 70
bus and control lines, graphic symbol LGND 5
bus connectors location, tape control unit read/write LOC 25, LOC 30
bus in line operation, channel to tape control unit interface OPER 190
bus interconnection checks CARR-DR 3-3
bus out check sense bit SENSE 110
bus out line operation, channel to tape control unit interface OPER 190
bus problems, support troubleshooting EAD 5030
buses, MD support diskette tape control unit scan rings MD/SDISK 131
busy status bit SENSE 205
BWRP
  See buffer wrap register

C

cable
  ac power distribution
    removal and replacement CARR-DR 2180
  after using the fault symptom index FSI 2
  checking device interconnections CARR-DR 3-3
  connectors
    dual tape control unit locations LOC 30
    from and to, cable group list FSI 200
  dc power distribution
    internal locations, drive LOC 140
    removal and replacement CARR-DR 790, CARR-DR 791, CARR-DR 796, CARR-DR 800
  drive
    read adapter location LOC 145
    tach sensor location LOC 155
    write adapter location LOC 150
  groups, listing of FSI 200
  interconnection failures, troubleshooting EAD 5000
  location chart, tape transport unit CARR-DR 491
  message display dc power
    removal and replacement CARR-DR 900
  power LOC 170
  signal LOC 170
  STI cable, installation INST 90
  table, cable groups FSI 201
  tachometer sensor
    removal and replacement CARR-DR 810
  tape control unit
    power, connecting INST 60
    removal and replacement CARR-TCU 150
  tape control unit subsystem diagrams EAD 5030
  tape transport unit
    removal and replacement CARR-DR 490
cable harness, tape transport unit thermal switch
  removal and replacement CARR-DR 830
CAE
  See channel adapter error register
card
  loader control CARR-DR 2810, LOC 171
card, logic
  drive
    removals and replacements CARR-DR 640
  location charts, how to read graphic format LGND 60
  location identification LOC 10
  plug lists, how to read graphic format LGND 60
  tape control unit
    removal and replacement CARR-TCU 1110

CARR-DR section introduction CARR-DR 1-9
CARR-TCU section introduction CARR-TCU 1-9
cartridge failure determination procedure CART 30
cartridge in stack sensor removal and replacement CARR-DR 2910
cartridge latch
  assembly
    location LOC 100
    removal and replacement CARR-DR 80
  solenoid
    location LOC 100
    removal and replacement CARR-DR 20
cartridge latched sensor
  adjustment CARR-DR 110
  introduction INTRO 51
  location LOC 100
  removal and replacement CARR-DR 110
cartridge loader, automatic INSP 56, LGND 46, LGND 47, LGND 48, PANEL 40
cartridge present sensor
  introduction INTRO 51
  location LOC 100
  removal and replacement CARR-DR 100
cartridge staged sensor CARR-DR 2920
cartridge, magnetic tape
  about CARR-DR 2320
  clutch tool illustration PLAN 6
  condition when unable to remove cartridge from drive
    how to identify CART 10
    leader block and threader pin at cartridge latch assembly CART 10-3
    leader block and threader pin in the machine reel hub CART 10-2
    leader block and threader pin stopped in the tape path CART 10-2
    leader block separated, example CART 10-1
    tape pulled out, example CART 10-1
  description CART 5, INTRO 10
  magnetic tape attachment procedure CART 30
  recording media characteristics INTRO 5
  removal by hand CART 10
CAS
  See channel adapter status register
CCA
  See channel card register
CCC
  See channel card control register
CE messages CE/HSC 4
  information message CE/HSC 4
  question message CE/HSC 4
  request message CE/HSC 4
CE panel description CE/HSC 8, 10 and 12
center tape guide
  removal and replacement CARR-DR 2310
CER
  See channel error register
channel adapter
  area clocks EAD 10
  cable groups FSI 200
  cards
    clocks EAD 10
    locations LOC 15
    removals and replacements CARR-TCU 1110
    switch locations LOC 50
  code, sense bits SENSE 110
  communications OPER 15
  data handling area OPER 15
  description INTRO 30
  error register (CAE) DF 33
  function test MD/SDISK 820
  interrupt register, MD support diskette channel RAM display MD/SDISK 116
  multiple channel adapters failing EAD 5007
  oscilloscope information EAD 5008
  status register (CAS) DF 35
  status, MD support diskette channel RAM display MD/SDISK 116
  tags, MD support diskette channel RAM display MD/SDISK 116
  to buffer (local/remote) communication path OPER 140
  to buffer failures, troubleshooting guide EAD 5007
  to status store communication path OPER 140
  to status store interconnection EAD 5006
channel adapters, setting jumpers for on the dc power supply CARR-TCU 1450
channel bus cable group FSI 200
channel card address register layout OPER 215
channel card control register (CCC) DF 35
channel card control register layout OPER 215
channel card register (CCA) DF 35
channel commands
  summary INTRO 55
channel configuration switch location(s) LOC 50
channel data register layout OPER 215
channel end status bit SENSE 205
channel error register bit definition DF 35
channel errors, sense error history table DF 145
channel initial selection OPER 60
channel interface OPER 15
channel RAM display diagram, MD support diskette MD/SDISK 115
channel request register bit definitions DF 40
channel tag cable group FSI 200
channel to tape control unit interface lines descriptions OPER 190
characteristics, operating INTRO 5
characters, message display PANEL 30
checking read/write
  offline checkout, dual tape control unit INST 76
  offline checkout, single tape control unit INST 72
checking the addresses
  offline checkout, dual tape control unit INST 76
  offline checkout, single tape control unit INST 72
checking the head connectors CARR-DR 130
checking the initial microprogram load
  offline checkout, dual tape control unit subsystem INST 83
  offline checkout, single tape control unit INST 74
checking the switches
  offline checkout, dual tape control unit INST 76, INST 78
  offline checkout, single tape control unit INST 70
checks
  file protect switch CARR-DR 90
  offline checkout for a dual tape control unit subsystem INST 76, INST 78
  offline checkout for a single tape control unit subsystem INST 70, INST 72
  pneumatic PNEU 30
  pre-installation INST 4
  safety INST 6
  tape control unit power supply jumpers, installation INST 56
  tape lifter CARR-DR 2160
  tape transport unit power supply jumpers, installation INST 56
CHK 1 errors OPER 70
CHK 2 errors OPER 70
CHK 46 air pressure loss analysis
circuit breaker
  safety checks INST 6
  tape control unit
    locations LOC 35
    terminals LOC 65
  tape transport unit ac power CB
    location LOC 75
    panel PANEL 15
    terminals LOC 65
clamping procedure for the plenum supply hose CARR-DR 3-1
cleaner block
  cleaning CARR-DR 130
  location LOC 100
  removal and replacement CARR-DR 1610
cleaner vacuum hose
  removal and replacement CARR-DR 470
cleaning
  cleaner block CARR-DR 130
  decoupler CARR-DR 130
  tape head guide assembly
    manually CARR-DR 130
    using the cleaning cartridge PLAN 6
clock
  timing chart, control storage EAD 7
  to and from the maintenance adapter EAD 70
  to channel adapters EAD 10
  to status store EAD 10
  to the adapter card EAD 80
  to the buffer control card EAD 20
  to the drive-adapter card EAD 40
  to the microprocessor card EAD 6
  to the read clock and format card EAD 50
  to the read detect cards EAD 30, EAD 50
  to the read ECC/CORR card EAD 50
  to the read skew buffer cards EAD 50
  to the status store basic card EAD 60
  to the status store communication card EAD 60
  to the write data card EAD 30
  XR bus and control EAD 8
clutch tool for releasing the cartridge clutch, illustration of PLAN 6
command out line operation, channel to tape control unit interface OPER 190
command reject sense bit SENSE 110
command status table (CST) DF 90
communication cable, dual tape control unit
  installing INST 30
  introduction INTRO 40
completion report, inspection INSP 60
compliant guide, read/write head, removal and replacement CARR-DR 2770
compression spring
  removal and replacement CARR-DR 180
COMTAB register DF 89
configurations
  diagram, tape control unit to tape control unit communication OPER 145
  dual tape control unit OPER 140
  single tape control unit OPER 135
  status store to status store communication path OPER 145
  tape control unit to tape control unit communications OPER 145
connecting
  bus and tag cables CARR-TCU 1360
  dual tape control unit communications cable INST 30
  tape control unit power cable INST 60
connectors, graphic symbol LGND 5
control
  lines, graphic symbol LGND 5
control card removal and replacement, loader CARR-DR 2810
control card, buffer
  clocks EAD 20
  location LOC 15
  operation OPER 20
  removal and replacement CARR-TCU 1110
control card, loader LOC 171
control lines, graphic symbol LGND 5
control storage
  array card
    location LOC 15
    removal and replacement CARR-TCU 1110
  clocks timing chart EAD 7
  introduction INTRO 20
  tables and logs
    device operations table (DOT) DF 120
    diagnostic hardware error log (DGHELO) DF 117
    path group ID table (PGT) DF 140
    path group map (PGM) DF 135
    sense error history table (SNERRH) DF 145
control storage to drive interconnection OPER 230
control store card
  location LOC 15
  removal and replacement CARR-TCU 1110
controls and data, timing chart OPER 230
convenience outlet
  +24 V control voltage diagram PWR 40
  jumper checks INST 56
  location, tape control unit ac power supply LOC 55, LOC 60
  MAP PWR 150-1
  tape control unit ac power supply panel PWR 15
convoluted bellows
  removal and replacement CARR-DR 2230
corrective action, predictive maintenance MSG 350
coupler assembly
covers
  drive, removal and replacement CARR-DR 2-5
  drive, top, removal and replacement CARR-DR 2-8
  tape control unit
    front cover adjustment CARR-TCU 2-2
    removals CARR-TCU 2-1
    replacements CARR-TCU 2-2
  tape transport unit
    front cover adjustment CARR-DR 2-2, CARR-DR 2-4
    removals CARR-DR 2-1, CARR-DR 2-3
    replacements CARR-DR 2-2, CARR-DR 2-4
criteria read and write data checks sense bytes SENSE 180
cross-reference tables
  external register address
    buffer control card DF 5
    drive adapter card DF 5
    maintenance adapter card DF 5
    microprocessor card DF 10
    read data flow and read control card DF 10
    status store card DF 10
    write data flow card DF 10
  XRA value to register name DF 12
CRR
  See channel request register
CST
  See command status table
customer engineering panel CE/HSC 4
  description CE/HSC 4
  display CE/HSC 4
  keypad CE/HSC 4
  location of controls and indicators CE/HSC 4
  special function key operations CE/HSC 4
CUT
  See tape control unit operations table

D

data analysis, support maintenance package SPROC 2
data buffer
  controls test, diagnostic routine EE33 DIAG 110
  data path test, diagnostic routine EE32 DIAG 100
  introduction INTRO 20
  operation OPER 20
data byte count sense byte SENSE 160
data byte transfer, maintenance adapter card to microprocessor card EAD 71
data card, write
  clocks EAD 30
  location LOC 15
  removal and replacement CARR-TCU 1110
data channel path operating characteristics INTRO 5
data check sense bit SENSE 110
data fields DF 3
data flow diagram, read OPER 95
data flow/error detection diagram OPER 75
data flow/error detection external registers OPER 65
data handling functional areas, description of OPER 15
data in line operation, channel to tape control unit interface OPER 190
data movement, description OPER 15
data out line operation, channel to tape control unit interface OPER 190
data record format, tape OPER 85
data that can be available, support maintenance package SPROC 2
data transfer errors MSG 100
data transfer sequence between the tape control unit and the drive and WTM, write erase gap sequence EAD 43
data, moving OPER 65
dc power supply
  diagram, tape control unit PWR 50
  locations LOC 35
  overview diagram PWR 34
  tape control unit
    connector locations LOC 35
    dc power complete LED, ac power supply panel LOC 55, LOC 60, PWR 15
    diagnostic MAP 400 PWR 400-1
    jumpers, checking INST 56
    power indicator description PANEL 10
    power indicator location LOC 50
    removal and replacement CARR-TCU 1450
    safety inspection INSP 45
    voltage tolerance tables PWR 20
  tape transport unit
    connector locations LOC 80, LOC 90
    locations LOC 80, LOC 90
    removal and replacement CARR-DR 950, CARR-DR 955
    safety inspection INSP 32
  TB cable
    removal and replacement CARR-TCU 1600
  test tool
    description PLAN 5
    how to use without tape control unit PWR 10
    how to use without tape transport unit PWR 12
    verification procedure PWR 10
  verification procedure PWR 12
DCR
  See device control register
DDR
  See dynamic device reconfiguration facility
deallocate procedure PLAN 55
decoupler
  assembly
    location LOC 100
    removal and replacement CARR-DR 120
  cleaning CARR-DR 130
  pressure hose
    removal and replacement CARR-DR 420
  vacuum hose
    removal and replacement CARR-DR 430
depth, tape control unit and tape transport unit INTRO 5
description
  adapter card OPER 40
  basic tape control unit test, error displays MD/SDISK 1100
  basic tape control unit test, how to run MD/SDISK 530
  basic tape motion test, diagnostic routine EEA2 DIAG 500
  buffer adapter card OPER 20
  buffer control card OPER 20
  buffer storage OPER 20
  buffered read data flow OPER 90
  buffered write mode OPER 100
  cable group list FSI 200
  channel adapter OPER 15
  channel adapter function test, diagnostic routine EE64 MD/SDISK 820
  channel adapter/buffer communications OPER 15
  channel adapter/status store communications OPER 15
  channel interface OPER 15
  control, tape control unit OPER 30
  data buffer
    controls test, diagnostic routine EE33 DIAG 110
    data path test, diagnostic routine EE32 DIAG 100
    description OPER 20
  data transfer errors MSG 100
  diagnostics, subsystem DIAG 2
  digital servo card OPER 40
  drive status bits 0-15 DF 150
  ERF reports MSG 100
  error checking, tape control unit OPER 30
  error packet MSG 100
  external register bus addressing and data pattern test, diagnostic routine EE85 DIAG 400
  fault symptom index FSI 2
  Format 7 MSG 100
  Format 8 MSG 100
  identification code introduction, diagnostic DIAG 2
  initial microprogram load (IML) OPER 60
  initial selection, tape control unit to drive operation OPER 185
  interrupt level test, diagnostic routine EE13 MD/SDISK 555
  logical components of the tape transport unit OPER 40
  loop write to read
    description OPER 110
    long test, diagnostic routine EE54 DIAG 220
    short pattern test, routine EE52 DIAG 200
    short timing test, diagnostic routine EE53 DIAG 218
  loose wrap test, tape OPER 55
  maintenance adapter OPER 30
  maintenance information description by volume PLAN 10, PLAN 11
  MD serializer/deserializer OPER 30
  message display OPER 40, OPER 130
  motion control OPER 130
  operator information message error code MSG 15
  parallel/serial interconnection OPER 130
  pneumatic supply OPER 45
  positioning, motion control OPER 130
  power amplifier board OPER 40
  power overview
    tape control unit OPER 30
    tape transport unit OPER 40
  power sequencing OPER 60
  power-on-reset/under-voltage detector, tape control unit OPER 30
  processor card OPER 40
  processor external register test, diagnostic routine EE14 MD/SDISK 565
  read
    clock/detect cards OPER 25
    description OPER 25
    drive data flow OPER 120
    ECC/CORR card OPER 25
    preamplifier card OPER 40
    skew cards OPER 25
  read clock and format card OPER 25
  read data flow OPER 90
  registers, maintenance adapter OPER 30
  scope loop utility, diagnostic routine EEF0 MD/SDISK 1100
  sense data
    byte 3, formats 19, 20, and 21 SENSE 115
    bytes 0 through 2, formats 19, 20, and 21 SENSE 110
    bytes 16 through 23, format 21 SENSE 180
    bytes 16 through 23, formats 19 and 20 SENSE 150
    bytes 24 through 31, format 21 SENSE 190
    bytes 24 through 31, formats 19 and 20 SENSE 160
    bytes 4 through 7, formats 19, 20, and 21 SENSE 130
    bytes 8 through 15, format 21 SENSE 170
    bytes 8 through 15, formats 19 and 20 SENSE 140
    description SENSE 100
  sensor test, tape OPER 55
  serial interconnection OPER 130
  status byte
    bit descriptions SENSE 205
    overview SENSE 200
  status store
    channel adapter communications OPER 30
    description, functional area OPER 30
    order test, routine EE93 DIAG 460
    updating RAM OPER 142
    write/read RAM storage test, routine EE92 DIAG 450
  STI-FIPS adapter OPER 12
  support maintenance package SPROC 2
  support procedure, MD MD/SDISK 100
  switches and indicators PANEL 15
    cable groups FSI 200
    descriptions PANEL 10
  SYS$ERRORLOG:ERRORLOG.SYS MSG 100
  tape control unit drive to drive serial test, diagnostic routine EE44 DIAG 170
  tape control unit functional areas OPER 15
  tape control unit to drive bus and tag test, routine EE43 DIAG 160
  tape drive
    data flow OPER 120
    thread-load tape OPER 55
    transport description OPER 50
    unwinding/unloading tape OPER 55
  tape report MSG 100
  tape-write-immediate mode OPER 100
  transfer packet MSG 100
  VMS error log messages MSG 100
  voltage regulator, tape control unit OPER 30
  write
    data flow card OPER 40
    data flow description OPER 100
    description, functional area OPER 20
  write data flow OPER 120
  write/read exerciser, routine EEA3 DIAG 510
  write/read exerciser, routine EEA4 DIAG 550
determining the sense data format SENSE 100
developing a fault symptom code, support procedures SPROC 3
device (drive)
  assignment mask, MD support diskette status store display MD/SDISK 121
  assignments, MD support diskette status store display MD/SDISK 121
  bus cable groups FSI 200
  command, MD support diskette channel RAM display MD/SDISK 116
  condition, MD support diskette channel RAM display MD/SDISK 116
  control bus (DCB) bit definitions DF 40
  control register (DCR) bit definitions DF 40
  device level register (DLR) bit definitions DF 45
  end status bit SENSE 205
  interrupt register (DIR) bit definitions DF 45
  intervention required message format MSG 10
  online sense bit SENSE 110
  operations table (DOT) DF 120
  program flags, MD support diskette status store display MD/SDISK 121
  status/error register bit definitions DF 45
  status, MD support diskette channel RAM display MD/SDISK 116
  status, MD support diskette status store display MD/SDISK 121
  tag register (DTR) bit definitions DF 50
device interconnection checks CARR-DR 3-3
DGHELO
  See diagnostic hardware error log
diagnostic hardware error log (DGHELO) DF 117
diagnostic test options MD/SDISK 7
diagnostics
  basic tape control unit test
    how to run MD/SDISK 530
    routine E010 description DIAG 2
  basic tape motion test, routine EEA2 DIAG 500
  channel adapter function test, routine EE64 MD/SDISK 820
  data buffer
    controls test, routine EE33 DIAG 110
    data path test, routine EE32 DIAG 100
  drive command exerciser MD/SDISK 1220
  drive patch load utility, routine, EEF1 MD/SDISK 1120
  external register bus addressing and data pattern test, routine EE85 DIAG 400
  identification code
    introduction DIAG 2
    table DIAG 3
  interrupt level test, routine EE13 MD/SDISK 555
  introduction DIAG 2
  long loop write to read test, routine EE54 DIAG 220
  maintenance device/maintenance adapter diagnostic MD/SDISK 520
  processor
    external register test, routine EE14 MD/SDISK 565
    function test, diagnostic routine EE12 MD/SDISK 550
  processor function test, routine EE12 MD/SDISK 550
  routine descriptions DIAG 2
  scope loop utility, routine EEF0 MD/SDISK 1100
  section descriptions DIAG 2
  short loop write to read
    pattern test, routine EE52 DIAG 200
    timing test, routine EE53 DIAG 218
  status store
    order test, routine EE93 DIAG 460
    write/read RAM storage test, routine EE92 DIAG 450
  support diagnostic
  tape control unit/drive
    tape control unit to drive bus and tag test, routine EE43 DIAG 160
    tape control unit to drive bus out driver wrap test, diagnostic routine EE42 DIAG 150
    tape control unit to drive serial test, routine EE44 DIAG 170
  write/read exerciser, routine EEA3 DIAG 510
  write/read exerciser, routine EEA4 DIAG 550
diagram, read data flow OPER 95
digital servo card
  introduction INTRO 50

location LOC 130
digital servo card, logical components OPER 40
dimensions, tape control unit and tape transport unit INTRO 5
DIR
See device interrupt register
disable indicator description PANEL 10
disconnect in line operation, channel to tape control unit interface OPER 190
disconnecting tape transport units and tape control unit, relocate or discontinue subsystem INST 180
discontinue subsystem INST 140
diskette drive
location LOC 50
operation OPER 220
removal and replacement CARR-TCU 860
diskette drive, tape control unit panel PANEL 10
dismount procedure PLAN 55
display maintenance adapter registers, MD support diskette utilities MD/SDISK 155
display subsystem configuration, MD support diskette MD/SDISK 105
distribution cable (internal) locations, drive dc LOC 140
DLR
See device, device level register
DOT
See device operations table
dot ORs of output lines, how to read graphic format LGND 75
drive
adapter
description INTRO 30
diagram, single tape control unit subsystem overview INTRO 25
adapter card
clocks EAD 40
location LOC 15
removal and replacement CARR-TCU 1180
setting switches CARR-TCU 1189
switch setting worksheet CARR-TCU 1188
address switch
description PANEL 15
location LOC 75
removal and replacement CARR-DR 1040, CARR-DR 1045
attachment, dual tape control units INTRO 40
blower assembly
location LOC 120
removal and replacement CARR-DR 200
bus cable groups FSI 200
cables location chart CARR-DR 491
command codes sense bytes SENSE 150
command exerciser
commands MD/SDISK 1220
control options MD/SDISK 1220
details MD/SDISK 1222
diagram MD/SDISK 1221
error messages MD/SDISK 1220
introduction DIAG 2
prompting screens MD/SDISK 1225
connector locations LOC 120
covers removal and replacement CARR-DR 2-5
covers, top, removal and replacement CARR-DR 2-8
dc distribution cable (internal) locations LOC 140
deallocate procedure PLAN 55
detected errors sense byte SENSE 190
dismount procedure PLAN 55
drive power switch
description PANEL 15
location LOC 75
removal and replacement CARR-DR 1040
ending operation procedure PANEL 5
error codes sense byte SENSE 150
error recovery procedures code, sense byte 8 SENSE 140
errors, sense error history table DF 145
external registers DF 155
features sense byte SENSE 160
flag 1 sense byte SENSE 150
how to operate PANEL 5
interconnections
error descriptions EAD 5030
tape control unit subsystem cable diagrams EAD 5030
troubleshooting guide, general EAD 5010, EAD 5030
locations LOC 95
logic INTRO 50
model number sense byte SENSE 150
online/offline switch locations LOC 75
operator panel
description PANEL 15
location LOC 75
removal and replacement CARR-DR 2-6
power off and on procedures CARR-DR 8
read adapter cables locations LOC 145
ready/not ready switch locations LOC 75
rewind switch locations LOC 75
setting the addresses PANEL 12
setting the logical address INST 50
setting the physical addresses INST 50
status bits 0-15 description DF 150
status/error register (DSE) DF 45
status, message display PANEL 30
switch panel
description PANEL 15
location LOC 75
tach sensor cable locations LOC 155
thermal switch assembly
location LOC 130
removal and replacement CARR-DR 1100
top card connectors locations LOC 130
transport assembly INTRO 51
unload switch locations LOC 75
write adapter cables locations LOC 150
0 and 1 locations LOC 75
drive control card
introduction INTRO 50
removal and replacement CARR-DR 850
drive data flow description OPER 120
drive display panel locations LOC 75
drive interconnections, error descriptions EAD 5030
drive patch load utility, routine EEF1 MD/SDISK 1120
drive to control storage interconnection OPER 230
DSE
See device (drive) status/error register
DTR
See device tag register
dual tape control unit subsystem
cable connectors location LOC 25, LOC 30
cable group listing FSI 200
command sequence OPER 141
communication INTRO 40
configuration diagram OPER 141
diagram, theory INTRO 35
IML procedure PANEL 7
offline checkout INST 76, INST 78
setting tape control unit addresses INST 40
updating status store RAM OPER 142
updating the RAM status byte OPER 142
writing a message into address 80 and 83 OPER 142
dual tape control unit, error descriptions EAD 5050

E

EAD
Introduction EAD 3
EC compatibility problems, possible START 135
emergency power switch location LOC 50
enable communication path signal line, MD to MA communication path OPER 80
end-of-call actions, support procedures SPROC 4
ending drive operation procedure PANEL 5
ending sequence timing chart, device stop OPER 186
ending sequence, tape control unit to drive operation OPER 186
entry into the fault symptom index FSI 2
equipment check sense bit SENSE 110
ERA and (ERAH)
See error register A bit definitions
erase gap counts sense byte SENSE 190
ERB and (ERBH)
See error register B bit definitions
ERF reports MSG 100
ERP
See error recovery procedures, drive (sense byte 8)
error analysis diagram logic blocks, how to read graphic symbols LGND 55
error checking, MD to MA communication path OPER 80
error checking, tape control unit OPER 30
error codes
MD support diskette status store display MD/SDISK 121
sense byte 3, error recovery procedures action
description SENSE 120
table SENSE 115
error indicator description PANEL 10
error match value, MD support diskette utilities, trace/match control MD/SDISK 146
error packet MSG 100
error path isolation START 400
error recovery procedures, drive (sense byte 8) SENSE 140
error register A (ERA) and (ERAH) bit definitions DF 50
error register B (ERB) and (ERBH) bit definitions DF 55
error registers, MD support diskette register display/alter MD/SDISK 126
error, MD support diskette tape control unit scan rings MD/SDISK 131
error, message display PANEL 30
errors, XR detected OPER 70
ESD grounding wrist strap for electrostatic discharge PLAN 6
external drive address sense bits SENSE 160
external load resistor panel
removal and replacement CARR-DR 360
external register bus addressing and data pattern test, diagnostic routine EE85 DIAG 400
external registers
address cross-reference tables, description of DF 3
addressing OPER 65
addressing, description of DF 3
bit definitions
buffer channel SARS register (BCSS) DF 20
buffer channel status and error register (BCSE) DF 15
buffer device pointer high register (BDPH) DF 30
buffer device status and error register (BDSE) DF 20
buffer diagnostic 0 register (BDG0) DF 25
buffer diagnostic 1 register (BDG1) DF 25
buffer wrap register (BWRP) DF 30
channel error register (CER) DF 35
channel request register (CRR) bit definitions DF 40
COMTAB register DF 89
device status/error register (DSE) DF 45
error register A (ERA) and (ERAH) DF 50
error register B (ERB) and (ERBH) DF 55
external register address register (XRA) DF 85
maintenance data in register (MDI) DF 55
maintenance data out register (MDO) DF 60
maintenance status byte register (MSB) DF 60
maintenance tag in register (MTI) DF 60
maintenance tag out register (MTO) DF 62
processor control register (PCR) DF 65
processor error register (PER) DF 65
processor reset register (PRR) DF 65
processor status register (PSR) DF 70
read control register (RCR) DF 70
read diagnostic control register (RDC) DF 70
read error register (RER) DF 75
read pattern register (RPR) DF 80
read residual count register (RRC) DF 80
read status register (RSR) DF 82
write control register (WCR) DF 82
buffer control card DF 5
data flow/error detection OPER 65
diagram, data flow/error detection OPER 75
drive adapter card DF 5
drive, description of DF 155
maintenance adapter card DF 5
maintenance control register (MCR) DF 55
maintenance data out register (MDO) DF 60
maintenance status byte register (MSB) DF 60
microprocessor card DF 10
operation OPER 65
read data flow and read control card DF 10
status store DF 10
write control register (WCR) DF 82
write data flow card DF 10
XRA value to register name cross-reference table DF 12
extractor, card PLAN 5
E010 basic tape control unit tests, description DIAG 2

F

fail indication, IML PANEL 7
failure IDs
basic tape motion test, routine EEA2 DIAG 500
data buffer controls routine EE33 DIAG 110
data buffer data path test, routine EE32 DIAG 100
external register bus addressing and data pattern test, routine EE85 DIAG 400
interrupt level test, routine EE13 MD/SDISK 555
long loop write to read test, routine EE54 DIAG 3
processor external register test, routine EE14 MD/SDISK 565
processor function test, routine EE12 MD/SDISK 550
scope loop utility, routine EEF0 MD/SDISK 1100
short loop write to read pattern test, routine EE52 DIAG 200
short loop write to read timing test, routine EE53 DIAG 218
status store order test, routine EE93 DIAG 460
tape control unit to drive bus and tag test, routine EE43 DIAG 160
tape control unit to drive bus out driver wrap test, diagnostic routine EE42 DIAG 150
tape control unit to drive serial test, routine EE44 DIAG 170
write/read exerciser, routine EEA3 DIAG 510
write/read exerciser, routine EEA4 DIAG 550
write/read RAM storage test, routine EE92 DIAG 450
fault symptom code
actions to take START 325
caused by other than TA90 hardware failures START 100
determining with ACL LEDs START 300
determining with Fault Indicators START 300
fault symptom code, developing a SPROC 3

fault symptom index
  after using FSI 2
  cable group list, using the FSI 200
  description of contents FSI 2
  table FSI 3
features, optional INTRO 5
feed assembly LOC 171
feed assembly removal and replacement CARR-DR 2950
field wire net lists, how to read graphic format LGND 80
file protect gauge PLAN 6
file protect sense bit SENSE 110
file protect switch
  adjustment CARR-DR 90
  check CARR-DR 90
  description CART 5
  location LOC 95
  removal and replacement CARR-DR 90
file reel clutch description CART 5
file reel motor
  location LOC 105
  removal and replacement CARR-DR 30
file reel tachometer (tach 2) introduction INTRO 51
final checkout
  offline checkout, dual tape control unit subsystem INST 81
  offline checkout, single tape control unit INST 74
first tape transport unit installation INST 11
Format 5 error log report
  example MSG 200
  extended sense information, description MSG 201
  field definitions MSG 200
Format 8 error log report
  example MSG 205
  field definitions MSG 205
format, sense data
  description SENSE 100
  format 19
    bytes 16 through 23 description SENSE 150
    bytes 24 through 31 description SENSE 160
    bytes 24 through 31, table SENSE 155
    bytes 4 through 7, description SENSE 130
    bytes 4 through 7, table SENSE 125
    bytes 8 through 15 description SENSE 140
    bytes 8 through 15, table SENSE 135
    summary SENSE 110
  format 20
    bytes 16 through 23 description SENSE 150
    bytes 24 through 31 description SENSE 160
    bytes 24 through 31, table SENSE 155
    bytes 4 through 7, description SENSE 130
    bytes 4 through 7, table SENSE 125
    bytes 8 through 15 description SENSE 140
    bytes 8 through 15, table SENSE 135
    summary SENSE 110
  format 21
    bytes 4 through 7, description SENSE 130
    bytes 4 through 7, table SENSE 125
    summary SENSE 110
format, tape OPER 85
format, tape data record OPER 85
from and to connectors, cable group list FSI 200
FRU listing CARR-DR 1-7
FRU listing by alphabetical sequence CARR-TCU 1-8, CARR-DR 1-7
FRU number, cable group list FSI 200
function test
  channel adapter MD/SDISK 820
  processor MD/SDISK 550
functional area external registers, description of DF 3
functions, description of
  tape control unit INTRO 15, OPER 12
  tape transport unit INTRO 45
fuse (F1) LED, tape control unit ac power supply panel PWR 15
fuses
  loader fuses CARR-DR 2880
  removal and replacement CARR-DR 960, CARR-TCU 1470
  tape control unit
    location, ac power supply LOC 55, LOC 60
    locations, dc power supply LOC 35
  tape transport unit dc power supply
    locations LOC 80, LOC 90
fuses continue to blow, tape transport unit PWR 30

G

gate fan cable, tape control unit
  removal and replacement CARR-TCU 1650
gauge, pressure/vacuum PLAN 5
glossary GLOSS 1
GMP diagnostics CE/HSC 14
graphic symbols and lines LGND 5
ground wire check, machine INST 6, INST 306
group number, cable group list FSI 200

H

hardware error code sense byte SENSE 150
hardware tape control unit information sense byte SENSE 160, SENSE 190
head and guide assembly
  checking the connectors CARR-DR 130
  cleaning manually CARR-DR 130
  cleaning without the cleaning cartridge PLAN 6
  compliant guide, removal and replacement CARR-DR 2770
  location LOC 100
  removal and replacement CARR-DR 130
head tape guide
  left
    removal and replacement CARR-DR 2280
  right
    removal and replacement CARR-DR 2290
height, tape control unit and tape transport unit INTRO 5
hex all, MD support diskette status store display MD/SDISK 121
hex display, MD support diskette tape control unit scan rings MD/SDISK 131
Hierarchical Storage Controller CE/HSC 20
  ILEXER CE/HSC 20
  ILTAPE CE/HSC 20
  ILTCOM CE/HSC 20
hold out line operation, channel to tape control unit interface OPER 190
hose clamp tool for air pressure hoses, illustration of PLAN 6
hose, clamping the plenum supply CARR-DR 3-1
host response, message display PANEL 30
HSC
  See Hierarchical Storage Controller

I

I/O cable installation INST 110
identification code table MD/SDISK 3
identification code table, diagnostic DIAG 3
identifying parts LGND 10
ILEXER CE/HSC 20
ILTAPE CE/HSC 20
ILTCOM CE/HSC 20
IML
  See initial microprogram load (IML)
IML diskette drive
  See diskette drive
IML diskette drive, removal and replacement CARR-TCU 860
IML switch description PANEL 10
in stack sensor removal and replacement CARR-DR 2910
indicator
  attention OPER 240, PANEL 40
  disable PANEL 10
  power PANEL 40
indicators and switches PANEL 10, PANEL 15
information supplied by the support diagnostics MD/SDISK 6
initial microprogram load (IML)
  description INTRO 10
  diskette, about CARR-TCU 2580
  operation OPER 60
  procedure PANEL 7
  writing a message into address 80 and 83 OPER 142
initial microprogram load or power-on reset failure EAD 4000
initial selection sequence from the tape control unit to the drive EAD 41
initial selection, tape control unit to drive operation OPER 185
inlet filter
  location LOC 120
  removal and replacement CARR-DR 330
input stack assembly removal and replacement CARR-DR 2900
inspection procedures
  education INSP 10
  general instructions INSP 10
  preparation INSP 15
  tape control unit
    ac power supply INSP 40, INSP 65
    dc power supply INSP 45
    inside INSP 35, INSP 55
    outside INSP 15
  tape transport unit
    ac grounding diagram INSP 60, INSP 70
    dc power supplies INSP 32
    inside INSP 20, INSP 32
    outside INSP 15
installation
  adding tape transport units to an installed subsystem INST 135
  additional tape transport units INST 20
  dual tape control unit communications cable INST 30
  first tape transport unit INST 11
  overview chart INST 4
  radio frequency interference frame pans and end plates INST 130
  reporting with LARS INST 131
  STI cable, installation INST 90
  tape control unit INST 10
  testing with ILEXER INST 131
  testing with ILTAPE INST 131
  tools and test equipment INST 4
interconnection checks, device CARR-DR 3-3
interconnection sequence, serial OPER 188
interface assignments, MD support diskette status store display MD/SDISK 121
interlock spring
  removal and replacement CARR-DR 190
internal clocks on the write data card EAD 30
interposer cable and connector
  removal and replacement CARR-DR 2690
interrupt level test, diagnostic routine EE13 MD/SDISK 555
  channel adapter function test, routine EE64 MD/SDISK 820
interrupt, MD support diskette tape control unit scan rings MD/SDISK 131
intervention required sense bit SENSE 110

J

jumper, power supply
  checks, installation INST 55
  drive dc power supply CARR-DR 950
  tape control unit ac power supply CARR-TCU 1440
  tape control unit dc power supply CARR-TCU 1450
J1-J2 connectors location, drive LOC 120
J1-J20 locations, tape control unit dc power supply LOC 35

K

keys, graphic symbol LGND 5

L

latch interlock
  removal and replacement CARR-DR 1270
latch spring
  removal and replacement CARR-DR 160
LDT
  See logical device table
leader block
  description CART 5
  replacement procedure CART 20
  separated from tape, example CART 10-1
leader block and threader pin
  at the cartridge latch assembly
    cartridge removal procedure CART 16
    example CART 10-3
  in machine reel hub
    cartridge removal procedure CART 12
    example CART 10-2
  stopped in tape path
    cartridge removal procedure CART 14
    example CART 10-2
leader block replacement kit PLAN 6
LED positions on the message display PANEL 30
left guide bearing hose
  removal and replacement CARR-DR 450
left input rail assembly removal and replacement CARR-DR 2930
length, tape INTRO 5
lines, MD to/from MA communication path signal OPER 80
listing, FRU CARR-DR 1-7
load assembly CART 17, LOC 170
load assembly removal and replacement CARR-DR 2820
load balancing in a dual tape control unit subsystem OPER 140
load complete sensor removal and replacement CARR-DR 2840
load motor removal and replacement CARR-DR 2830
load time, tape transport INTRO 5
loader

automatic cartridge LGND 46, LGND 47, LGND 48, OPER 240, PANEL 40
control card LOC 171, OPER 240
control panel LOC 170
mechanical assembly LOC 171, OPER 240
loader control card removal and replacement CARR-DR 2810
loader fuses removal and replacement CARR-DR 2880
loader mechanical assembly CARR-DR 2850, LOC 171
loader operator panel removal and replacement CARR-DR 2980
loader signal cable removal and replacement CARR-DR 2860
loader, automatic cartridge INSP 56
loading tape OPER 55
loading the support diskette, MD MD/SDISK 100
local mode diagram, tape control unit ac power PWR 36
local mode MAP 110, +24 V PWR 110-1
local power enable switch description PANEL 10
local/remote power panel
connectors J1 and J2 LOC 50
location LOC 50
removal and replacement CARR-TCU 840
local/remote power switch PANEL 10
local/remote switch, location LOC 50
locate block function failed sense bit SENSE 110
locating parts in the TA90 documentation LGND 15
location
locations
cable group list FSI 200
loader mechanical assembly LOC 170, LOC 171
tape control unit cables, listing CARR-TCU 157
tape control unit logic boards and cards LOC 15
tape transport unit cables CARR-DR 491
logic board
card locations identification LOC 10
layout LOC 5
pin locations LOC 5
tape control unit
card locations LOC 15
removal and replacement, A1 CARR-TCU 1390
removal and replacement, A2 CARR-TCU 1400
voltage regulator card in 01A-A1 INTRO 20
02A-A1, drive
location LOC 130
removal and replacement CARR-DR 580
logic board layout pin side, tape transport unit LOC 135
logic card
drive
removals and replacements CARR-DR 640
location charts, how to read graphic format LGND 60
location identification LOC 10
plug lists, how to read graphic format LGND 60
tape control unit
removal and replacement CARR-TCU 1110
logic diagrams
dot ORs of output lines, how to read graphic format LGND 75
example LGND 70
how to read graphic symbols LGND 55
layout description LGND 60
logic pages, cable group list FSI 200
logical address switch
cable connector location LOC 120
setting INST 50
logical block position sense bits SENSE 130
logical components of the tape transport unit OPER 40
logical device table (LDT) DF 125
logical pins, how to read graphic format LGND 70
logs
diagnostic hardware error log (DGHELO) DF 117
long loop write to read test DIAG 220
loop utility, scope MD/SDISK 1100
loop write to read
data flow diagram OPER 115
description, data flow OPER 110
long OPER 110
long test, routine EE54 DIAG 220
short OPER 110
short timing test, routine EE53 DIAG 218
loose wrap test, tape OPER 55

M

MA
See maintenance adapter
machine ground wire check INST 6
machine reel
assembly location LOC 100
flange, lower
removal and replacement CARR-DR 50
flange, upper
removal and replacement CARR-DR 540
hub
removal and replacement CARR-DR 610
motor and hub mount
location LOC 105
removal and replacement CARR-DR 40
tach sensor A
adjustment CARR-DR 40, CARR-DR 2250
introduction INTRO 51
removal and replacement CARR-DR 2250
tach sensor B
adjustment CARR-DR 40, CARR-DR 2260
introduction INTRO 51
removal and replacement CARR-DR 2260
tape guide
removal and replacement CARR-DR 2270
magnetic tape
attachment to cartridge procedure CART 30
conditions when unable to remove cartridge from drive
how to identify CART 10
leader block and threader pin at cartridge latch assembly CART 10-3
leader block and threader pin in the machine reel hub CART 10-2
leader block and threader pin stopped in the tape path CART 10-2
leader block separated, example CART 10-1
pulled out of cartridge, example CART 10-1
drive clocks EAD 80
pulled out of cartridge, example CART 10-1
magnetic tape reattachment to cartridge procedure CART 30
mainline circuit breaker (CB1), tape control unit PWR 15
maintenance adapter
card
clocks EAD 70
location LOC 15
removal and replacement CARR-TCU 1110
commands, MD support diskette utilities MD/SDISK 160
external registers DF 5
introduction INTRO 20
operation OPER 30
registers
maintenance data in (MDI) DF 55
maintenance data out (MDO) DF 60
maintenance status byte (MSB) DF 60
maintenance tag in (MTI) DF 60
maintenance tag out (MTO) DF 62
to/from MD communication OPER 80
maintenance control register (MCR) bit definitions DF 55
maintenance data in register (MDI) bit definitions DF 55
maintenance data out register (MDO) DF 60
maintenance device
See MD
maintenance device command byte transfer, maintenance adapter card to microprocessor card EAD 71
maintenance device to maintenance adapter timing EAD 71
maintenance guide description by volume PLAN 10
maintenance information description by volume PLAN 11
maintenance package summary
description PLAN 25
diagram PLAN 30
product support summary PLAN 50
maintenance starting point START 10
maintenance status byte register (MSB) DF 60
maintenance summary, TA90 PLAN 5
maintenance tag in register (MTI)
bit definitions DF 60
maintenance tag out register (MTO)
bit definitions DF 62
major bus lines, graphic symbol LGND 5
making the drive ready PANEL 5
manifold-in pressure hose
removal and replacement, 50 Hz CARR-DR 378
removal and replacement, 60 Hz CARR-DR 370
manifold-in vacuum hose assembly
removal and replacement, 50 Hz CARR-DR 388
removal and replacement, 60 Hz CARR-DR 380
MAPs, power
100, problem determination PWR 100-1
110, +24 V, local mode PWR 110-1
120, +24 V, remote mode PWR 120-1
130, +24 V control voltage PWR 130-1
150, convenience outlet PWR 150-1
190, power restart PWR 190-1
200, drive dc power (single drive) analysis procedure PWR 200-1
210, drive dc power (same symptom both drives) PWR 210-1
300, STI power check PWR 300
400, tape control unit dc power PWR 400-1
410, +1.7 V dc regulator, 01A-A1-T2 PWR 410-1
420, tape control unit +5 Volt CB tripped PWR 420-1
430, tape control unit -5 Volt CB tripped PWR 430-1
440, tape control unit +8.5 Volt fuse blows PWR 440-1
900, automatic cartridge loader power check PWR 900
mark in line operation, channel to tape control unit interface OPER 190
mark out line operation, channel to tape control unit interface OPER 190
mask value, MD support diskette utilities, trace/match control MD/SDISK 146
materials needed for inspection INSP 10
MCR
See maintenance control register
MD
cable group to maintenance adapter FSI 200
connector location LOC 50
internal adapter error detection OPER 80
reference key MD/SDISK 131
serializer/deserializer OPER 30
to maintenance adapter communication path OPER 80
to maintenance adapter communication path error checking OPER 80
to maintenance adapter communication path operations OPER 81
to maintenance adapter diagnostic MD/SDISK 520
to maintenance adapter timing EAD 71
MDI
See maintenance data in register
MDO
See maintenance data out register
mechanical assembly removal and replacement, loader CARR-DR 2850
mechanical assembly, loader LOC 170, OPER 240
message display
board
removal and replacement CARR-DR 600
board to switch board cable
removal and replacement CARR-DR 2130
cable
removal and replacement CARR-DR 2115
removal and replacement (message display to SLT Panel) CARR-DR 2110
removal and replacement (SLT Panel to logic board) CARR-DR 2113
dc power cable
removal and replacement CARR-DR 900
description OPER 40
description of messages PANEL 30
LED
description PANEL 15
removal and replacement CARR-DR 210
meter in line operation, channel to tape control unit interface OPER 190
microprocessor
card
location LOC 15
removal and replacement CARR-TCU 1110
clocks EAD 6
commands, MD support diskette utilities MD/SDISK 155
control, MD support diskette utilities MD/SDISK 140, MD/SDISK 150
external register address register (XRA) DF 85
external registers DF 10
introduction INTRO 20
registers
channel card address layout OPER 215
channel card control layout OPER 215
channel data layout OPER 215
error register A (ERA) and (ERAH) DF 50
error register B (ERB) and (ERBH) DF 55
processor control register (PCR) DF 65
processor error register (PER) DF 65
processor status register (PSR) DF 70
to channel adapter operation OPER 200
to status store operation OPER 200
to status store, to channel adapter data flow diagram OPER 215
microprocessor/control storage INTRO 20
minor bus lines, graphic symbol LGND 5
miscellaneous inside inspection, tape transport unit INSP 32
mode selection switch PANEL 40
mode switch location LOC 50
modes of writing data INTRO 22
motion control
description OPER 130
diagram OPER 125
drive transport INTRO 51
motor
load CARR-DR 2830
motor control, digital servo card OPER 130
mount/dismount error report, description MSG 212
moving data OPER 65
MSB
See maintenance status byte register
MTI
See maintenance tag in register (MTI)
MTO
See maintenance tag out register (MTO)
multiple logic diagrams for one card, how to read graphic symbols LGND 60

N

net to pin list, how to read graphic format LGND 80
no trouble found EAD 5070
normal/test switch description PANEL 10
not capable sense bit SENSE 110
number of tracks on tape INTRO 5

O

off-page connectors, graphic symbol LGND 5
offline procedure PLAN 55
on-page connectors, graphic symbol LGND 5
online test/offline test switch
description PANEL 15
location LOC 75
removal and replacement CARR-DR 1040
open operation timing chart, MD to MA communication path OPER 81
operating characteristics, subsystem INTRO 5
operating systems INTRO 5
operating the drive PANEL 5
operational in line operation, channel to tape control unit interface OPER 190
operational out line operation, channel to tape control unit interface OPER 190
operational overview of the tape control unit OPER 15
operations table, tape control unit (CUT) DF 105
operations, introduction OPER 5
operator intervention, sense byte 3 SENSE 120
operator panel, drive
removal and replacement CARR-DR 2-6
switch board
removal and replacement CARR-DR 1090
switch locations LOC 75
operator panel, loader CARR-DR 2980
operator panel, tape control unit
location LOC 50
operator setup panel
location LOC 50
tape control unit PANEL 10
optional features INTRO 5
oscilloscope PLAN 5
oscilloscope scoping procedure PLAN 65
out of sequence record sense bit SENSE 110
outlet MAP, convenience PWR 150-1
output current selection +5 V dc location, tape control unit dc power supply LOC 35
output filter
location LOC 120
removal and replacement CARR-DR 320
output stack assembly LOC 171
output stack assembly removal and replacement CARR-DR 2970
output stack up position sensor CARR-DR 2960
overrun sense bit SENSE 110

P

panel
ac power CB, tape transport unit PANEL 15
ac power supply, tape control unit PWR 15
operator, drive PANEL 15
switch, drive PANEL 15
panel, loader operator CARR-DR 2980
parallel/serial interconnection OPER 130
parity error detection OPER 80
path group
ID table (PGT) DF 140
map (PGM) DF 135
PCR
See processor control register
PER
See processor error register
permanent error, sense byte 3 SENSE 120
PGM
See path group map
PGT
See path group ID table
physical address switch
location LOC 120
removal and replacement CARR-DR 1290
setting INST 50
physical pins, how to read graphic format LGND 70
pin to net list, how to read graphic format LGND 80
plenum assembly and pressure switch
location LOC 100
removal and replacement CARR-DR 410
plenum supply hose
removal and replacement CARR-DR 390
plenum supply hose, clamping procedure CARR-DR 3-1
plunger spring
removal and replacement CARR-DR 170
pneumatic system diagram PNEU 3
pneumatics
checkout procedure PNEU 30
failure in the primary pneumatic system PNEU 12
locations LOC 120
operation OPER 45
pneumatic problem on a single drive PNEU 20
system measurements PNEU 5
vacuum checks PNEU 30
port buffer adapter cable group from channel adapter FSI 200
positioning
drive transport INTRO 51
motion control OPER 130
power
+1.7 V dc regulator, 01A-A1-T2 MAP 410 PWR 410-1
+24 V dc
diagram PWR 40
local mode MAP PWR 110-1
MAP PWR 130-1
remote mode MAP PWR 120-1
+5 V dc distribution diagram PWR 42
+8.5 V dc distribution diagram PWR 48
-5 V dc distribution diagram PWR 46
ac overview diagram PWR 32
ac power supply panel PWR 15
ACL power problems, MAP 900 PWR 900
convenience outlet PWR 150-1
dc control diagram PWR 50
dc overview diagram PWR 34
dc test tool
description PLAN 5
used without the tape control unit dc power supply PWR 10
used without the tape transport unit dc power supply PWR 12
verification procedure PWR 10, PWR 12
drive dc (single drive) analysis procedure MAP 200 PWR 200-1
drive dc power (same symptom both drives), MAP 210 PWR 210-1
introduction PWR 5
locations, tape control unit dc LOC 35
mainline circuit breaker (CB1) PWR 15
problem determination, MAP 100 PWR 100-1
restart MAP PWR 190-1
sequencing OPER 60
STI power check PWR 300-1
STI power check, MAP 300 PWR 300
tape control unit
ac power, local mode diagram PWR 36
ac power, remote mode diagram PWR 38
dc power MAP PWR 400-1
functional area description OPER 30
tape transport unit
fuses continue to blow PWR 30
logical component OPER 40
voltage tolerance tables PWR 20
power amplifier board
connector locations LOC 125
introduction INTRO 50
location LOC 105
operation OPER 40
removal and replacement CARR-DR 590
power cable LOC 170
power cable removal and replacement CARR-DR 2860
power indicator OPER 240, PANEL 40
power off and on procedure
drive CARR-DR 8
tape transport unit CARR-DR 8
power on/off switch and indicator description PANEL 10
power supply
introduction INTRO 20
see jumper, power supply
60 Hz and 50 Hz Japan
power-on-reset/under-voltage detector introduction INTRO 20
power/POR card
location LOC 15
removal and replacement CARR-TCU 1260
power, removing for relocate or discontinue INST 140
preamplifier card
introduction INTRO 50
location LOC 130
logical components OPER 40
preparation
for installation INST 4
for safety inspection INSP 15
pressure hose assembly
removal and replacement CARR-DR 340
pressure loss analysis procedure
air pressure loss PNEU 10
pneumatic problem on a single drive PNEU 20
pressure measurement, pneumatic PNEU 5
pressure port cap
location LOC 120
pressure regulator adjustment PNEU 5
pressure sensor
removal and replacement CARR-DR 400
pressure/vacuum gauge PLAN 5
pressure/vacuum kit PLAN 5
primary key, graphic symbol LGND 5
procedures
air pressure loss analysis
air pressure loss PNEU 10
pneumatic problem on a single drive PNEU 20
cartridge removal by hand CART 10
clamping the plenum supply hose CARR-DR 3-1
dc test tool verification PWR 10, PWR 12
ending drive operation PANEL 5
error recovery, sense byte 8 SENSE 140
initial microprogram load (IML) PANEL 7
leader block replacement CART 20
magnetic tape attachment CART 30
no trouble found EAD 5070
offline procedure PLAN 55
operating the drive PANEL 5
pneumatic checkout PNEU 30
pressure measurement, pneumatic PNEU 5
scoping (using oscilloscope) PLAN 65
support SPROC 2
vacuum adjustment PNEU 5
vacuum measurement, pneumatic PNEU 5
processor
card
introduction INTRO 50
location LOC 130
logical components OPER 40
control register (PCR) bit definition DF 65
error register (PER) bit definition DF 65
external register test, diagnostic routine EE14 MD/SDISK 565
function test, diagnostic routine EE12 MD/SDISK 550
status register (PSR) bit definition DF 70
product support summary diagram, maintenance PLAN 50
PSR
See processor status register
pump motor
location LOC 120
removal and replacement CARR-DR 300
pump to output filter hose
removal and replacement CARR-DR 650
pushbuttons
tape control unit PANEL 10
tape transport unit PANEL 15
put operation timing chart, MD to MA communication path OPER 81

R

radio frequency interference frame pans and end plates, installing INST 130
rail assembly, left input CARR-DR 2930
rail assembly, right input CARR-DR 2940
RCR
See read control register
RDC
See read diagnostic control register
read
adapter
cables locations, drive CARR-DR 490, LOC 145
backward test, data buffer controls diagnostic EE33 DIAG 110
blocks
buffered data flow description OPER 90
bus cable groups FSI 200
bytes processed sense bytes SENSE 170
card clocks EAD 30
clock and format card
clocks EAD 50
description OPER 25
location LOC 15
removal and replacement CARR-TCU 1110
clock/detect cards OPER 25

control area INTRO 20
control register (RCR) bit definitions DF 70
corrected sense byte SENSE 170
data bus INTRO 30
data flow
  area clocks EAD 50
  control register (RCR) DF 70
  diagnostic control register (RDC) DF 70
  error register (RER) DF 75
  pattern register (RPR) DF 80
  residual count register (RRC) DF 80
  status register (RSR) DF 82
data flow and read control card external registers DF 10
data flow description OPER 90
data flow diagram OPER 95
detect card
  diagram, area clocks EAD 30, EAD 50
  location LOC 15
  removal and replacement CARR-TCU 1110
diagnostic control register (RDC) DF 70
ECC/CORR card
  description OPER 25
  diagram, area clocks EAD 50
  location LOC 15
  removal and replacement CARR-TCU 1110
error register (RER) bit definitions DF 75
forward test, data buffer controls diagnostic EE33 DIAG 110
overrun test, data buffer controls diagnostic EE33 DIAG 110
pattern register (RPR) bit definitions DF 80
processed sense byte SENSE 180
recovery retry count sense byte SENSE 190
residual count register (RRC) bit definitions DF 80
skew cards 1, 2, and 3
  clocks EAD 50
  description, functional area OPER 25
  locations LOC 15
  removal and replacement CARR-TCU 1110
status register (RSR) bit definitions DF 82
read backward
  data checks sense byte SENSE 170
  test, data buffer controls diagnostic EE33 DIAG 110
read bus cable removal and replacement CARR-DR 880
read bus problems EAD 5030
read cards, tape control unit OPER 25
read forward
  data checks sense byte SENSE 170
  test, data buffer controls routine EE33 DIAG 110
read in signal line, MD from MA communication path OPER 80
read/write bus connectors location, tape control unit LOC 30
read/write bus connectors location, tape transport unit LOC 75
read/write operations diagram OPER 120
reading data INTRO 22
reading speed, tape transport INTRO 5
ready/not ready switch description PANEL 15
receive message operation, tape control unit to tape control unit communication OPER 145
rechecking actions, support procedures SPROC 4
record format, tape data OPER 85
reference screen, MD support diskette register display/alter MD/SDISK 126
register display/alter diagram, MD support diskette MD/SDISK 125
registers, external
  address register (XRA) DF 85
  addressing OPER 65
  buffer
    channel pointer high register (BCPH) bit definitions DF 15
    channel pointer low register (BCPL) bit definitions DF 15
    channel SARS register (BCSS) DF 20
    channel status and error (BCSE) bit definitions DF 15
    device pointer high register (BDPH) bit definitions DF 30
    device pointer low register (BDPL) DF 30
    device status and error (BDSE) bit definitions DF 20
    diagnostic 0 (BDG0) bit definitions DF 25
    diagnostic 1 register (BDG1) bit definitions DF 25
    wrap register (BWRP) bit definitions DF 30
  channel
    adapter error register (CAE) bit definitions DF 33
    adapter status register (CAS) bit definitions DF 35
    card control register (CCC) DF 35
    card register (CCA) DF 35
    error register (CER) DF 35
    request register (CRR) bit definitions DF 40
  COMTAB register DF 89
  data flow/error detection OPER 65
  device
    control bus (DCB) bit definitions DF 40
    control register (DCR) bit definitions DF 40
    device level register (DLR) bit definitions DF 45
    interrupt register (DIR) bit definitions DF 45
    status/error (DSE) DF 45
    tag register (DTR) bit definitions DF 50
  diagram, data flow/error detection OPER 75
  drive, description of DF 155
  error register A (ERA) and (ERAH) DF 50
  error register B (ERB) and (ERBH) DF 55
  maintenance
    data in (MDI) DF 55
    data out (MDO) DF 60
    status byte register (MSB) DF 60
    tag in (MTI) DF 60
    tag out (MTO) DF 62
  operation OPER 65
  processor
    control register (PCR) DF 65
    error register (PER) DF 65
  read
    control register (RCR) DF 70
    diagnostic control register (RDC) DF 70
    error register (RER) DF 75
    pattern register (RPR) DF 80
    residual count register (RRC) DF 80
    status register (RSR) DF 82
  status register (PSR) DF 70
  XRA value to register name cross-reference table DF 12
registers, MD support diskette tape control unit scan rings MD/SDISK 131
regulator
  adjustment PNEU 5
  location LOC 120
  removal and replacement CARR-DR 310
relocate or discontinue subsystem INST 140
remote mode
  diagram, tape control unit ac power PWR 38
  MAP 120, +24 V control voltage PWR 120-1
removals and replacements
  ac circuit breaker/cable assembly, tape transport unit CARR-DR 2180
  ac distribution cable (drive) CARR-DR 2180
  ac fuse F1, tape control unit CARR-TCU 1460
  ac line cord, tape control unit CARR-TCU 1490
  ac power circuit breaker/cable assembly, tape transport unit CARR-DR 2180
  ac power supply cable CARR-DR 750
  ac power supply, tape control unit CARR-TCU 1440
  ac power to gate cable CARR-TCU 1770
  air pressure test hose assembly CARR-DR 2620
  blower assembly, tape control unit CARR-TCU 1500
  buffer adapter card CARR-TCU 1110
  buffer control card CARR-TCU 1110
  buffer storage cards CARR-TCU 1110
  cables, tape control unit CARR-TCU 150
  cables, tape transport unit CARR-DR 490
  card, tape control unit, logic CARR-TCU 1110
  cartridge in stack sensor CARR-DR 2910
  cartridge latch assembly CARR-DR 80
  cartridge latched sensor CARR-DR 110
  cartridge present sensor CARR-DR 100
  cartridge staged sensor CARR-DR 2920
  center tape guide CARR-DR 2310
  channel adapter cards CARR-TCU 1110
  cleaner block CARR-DR 1610
  cleaner vacuum hose CARR-DR 470
  compliant guide, read/write head CARR-DR 2770
  compression spring CARR-DR 180
  control storage array card CARR-TCU 1110
  control store card CARR-TCU 1110
  convoluted bellows CARR-DR 2230
  dc fuse F1 or F2, tape control unit CARR-TCU 1470
  dc power distribution (drive internal) cable CARR-DR 790
  dc power distribution cable CARR-DR 800
  dc power supply to gate TB cable, tape control unit CARR-TCU 1600
  dc power supply, drive CARR-DR 950
  dc power supply, STI-FIPS adapter CARR-TCU 9030
  dc power supply, tape control unit CARR-TCU 1450
  decoupler assembly CARR-DR 120
  decoupler pressure hose CARR-DR 420
  decoupler vacuum hose CARR-DR 430
  diskette drive CARR-TCU 860
  display board to switch board cable CARR-DR 2130
  drive adapter card (tape control unit) CARR-TCU 1180
  drive blower assembly CARR-DR 200
  drive control card CARR-DR 850
  drive dc fuse CARR-DR 960
  drive dc power supply CARR-DR 950
  drive logic board (02A-A1) CARR-DR 580
  drive logic cards CARR-DR 640
  drive switch panel CARR-DR 1040
  drive thermal switch CARR-DR 1100
  external load resistor panel CARR-DR 360
  feed assembly CARR-DR 2950
  file protect switch CARR-DR 90
  file reel motor CARR-DR 30
  fuse, drive dc CARR-DR 960
  gate fan cable, tape control unit CARR-TCU 1650
  head and guide assembly CARR-DR 130
  head tape guide (left) CARR-DR 2280
  head tape guide (right) CARR-DR 2290
  inlet filter CARR-DR 330, CARR-DR 335
  input stack assembly CARR-DR 2900
  interlock spring CARR-DR 190
  interposer cable and connector assembly CARR-DR 2690
  latch interlock CARR-DR 1270
  latch solenoid CARR-DR 20
  latch spring CARR-DR 160
  leader block CART 20
  left guide bearing hose CARR-DR 450
  left input rail assembly CARR-DR 2930
  left tape head guide CARR-DR 2280
  load assembly CARR-DR 2820
  load complete sensor CARR-DR 2840
  load motor CARR-DR 2830
  loader control card CARR-DR 2810
  loader fuses CARR-DR 2880
  loader mechanical assembly CARR-DR 2850
  loader operator panel CARR-DR 2980
  loader signal and power cable CARR-DR 2860
  local/remote power panel CARR-TCU 840
  logic board, tape control unit A1 CARR-TCU 1390
  logic board, tape control unit A2 CARR-TCU 1400
  logic card, tape control unit CARR-TCU 1110
  machine reel CARR-DR 40
  machine reel flange, lower CARR-DR 50
  machine reel flange, upper CARR-DR 540
  machine reel hub CARR-DR 610
  machine reel tach sensor A CARR-DR 2250
  machine reel tach sensor B CARR-DR 2260
  machine reel tape guide CARR-DR 2270
  maintenance adapter card CARR-TCU 1110
  message display board CARR-DR 600
  message display cable CARR-DR 2113
  message display cable (message display to SLT Panel) CARR-DR 2110
  message display cable (SLT Panel to logic board) CARR-DR 2113
  message display dc power cable CARR-DR 900
  message display LED CARR-DR 210
  microprocessor card CARR-TCU 1110
  operator panel printed circuit board CARR-TCU 1420
  operator panel switch board CARR-DR 1090
  output filter CARR-DR 320
  output stack assembly CARR-DR 2970
  output stack up position sensor CARR-DR 2960
  physical address switch CARR-DR 1290
  plenum assembly CARR-DR 410
  plenum supply hose CARR-DR 390
  plunger spring CARR-DR 170
  power amplifier board CARR-DR 590
  power/POR card CARR-TCU 1260
  pressure hose assembly CARR-DR 340
  pressure sensor CARR-DR 400
  pump motor CARR-DR 300
  pump to output filter hose CARR-DR 650
  read bus cable CARR-DR 880
  read clock and format card CARR-TCU 1110
  read detect card CARR-TCU 1110
  read ECC/CORR card CARR-TCU 1110
  read skew buffer card 1 CARR-TCU 1110
  read skew buffer card 2 CARR-TCU 1110
  read skew buffer card 3 CARR-TCU 1110
  regulator CARR-DR 310
  right guide bearing hose CARR-DR 440
  right input rail assembly CARR-DR 2940
  right tape head guide CARR-DR 2290
  service switch assembly CARR-TCU 1620
  stack low sensor CARR-DR 2890
  status store basic card CARR-TCU 1110
  status store communication card CARR-TCU 1110
  STI-FIPS adapter CARR-TCU 9000
  STI-FIPS gate fans CARR-TCU 9040
  STI-FIPS power supply CARR-TCU 9030
  STI-FIPS thermal switches CARR-TCU 9050
  switch panel printed circuit board, tape control unit CARR-TCU 1410
  tachometer sensor cable CARR-DR 810, CARR-DR 815
  tape control unit ac fuse CARR-TCU 1460
  tape control unit ac line cord CARR-TCU 1490
  tape control unit ac power supply CARR-TCU 1440
  tape control unit A1 logic board CARR-TCU 1390
  tape control unit A2 logic board CARR-TCU 1400
  tape control unit blower assembly CARR-TCU 1500
  tape control unit cables CARR-TCU 150
  tape control unit dc fuse F1 or F2 CARR-TCU 1470
  tape control unit dc power supply CARR-TCU 1450
  tape control unit dc power supply to gate TB cable CARR-TCU 1600
  tape control unit gate fan cable CARR-TCU 1650
  tape control unit logic card CARR-TCU 1110

tape control unit switch panel printed circuit board CARR-TCU 1410
tape control unit thermal switch, lower CARR-TCU 1430
tape control unit top card connector CARR-TCU 1570
tape lifter solenoid CARR-DR 2160
tape lifter solenoid input hose CARR-DR 2150
tape path sensor A CARR-DR 60
tape path sensor B CARR-DR 70
tape transport unit ac power circuit breaker/cable assembly CARR-DR 2180
tape transport unit cables CARR-DR 490
tape transport unit control box switches CARR-DR 1040
tape transport unit power supply blower, 60 Hz CARR-DR 710
tape transport unit thermal switch CARR-DR 820
tape transport unit thermal switch cable harness CARR-DR 830
tape transport unit thermal switch cable harness (end tape transport unit) CARR-DR 835
tape transport unit thermal switch cable harness (not end tape transport unit) CARR-DR 833
TCC (drive) CARR-DR 660
TCU address switch CARR-TCU 1970
tension transducer CARR-DR 140
tension transducer hose CARR-DR 460
tension transducer tape guide CARR-DR 2300
terminator, write bus A CARR-TCU 1995
terminator, write bus B CARR-TCU 1995
thermal switch lower, tape control unit CARR-TCU 1430
thermal switch upper, tape control unit CARR-TCU 2240
threader assembly CARR-DR 10
top card connector, tape control unit CARR-TCU 1570
top card connectors CARR-DR 660
UEPO switch CARR-TCU 1980
vacuum distribution tee CARR-DR 2190
vacuum hose assembly CARR-DR 350
vacuum supply hose CARR-DR 2120
vacuum test hose assembly CARR-DR 2630
voltage regulator card CARR-TCU 1110, CARR-TCU 1260
write bus A terminator CARR-TCU 1995
write bus B terminator CARR-TCU 1995
write data card CARR-TCU 1110
removing dual tape control unit communication cables, relocate or discontinue subsystem INST 170
removing I/O cables, relocate or discontinue subsystem INST 150
replacing subcovers and covers INST 130
request in line operation, channel to tape control unit interface OPER 190
RER
See read error register
reset switch
description PANEL 15
location LOC 75
removal and replacement CARR-DR 1040
reset tape control unit, MD support diskette register display/alter MD/SDISK 126
restart MAP 190, power PWR 190-1
rewind switch description PANEL 15
rewinding tape OPER 55
RFI
See radio frequency interference frame pans and end plates, installing
See radio frequency interference shield, installing
right guide bearing hose
removal and replacement CARR-DR 440
right input rail assembly removal and replacement CARR-DR 2940
RPR
See read pattern register
RRC
See read residual count register
RSR
See read status register
running offline checkout during installation
dual tape control unit subsystem INST 76, INST 78
single tape control unit subsystem INST 70, INST 72
running support diagnostics MD/SDISK 5

S

safety
checks INST 6
inspection, materials needed for INSP 10
instructions INSP 10
preparation INSP 15
tape control unit
ac grounding diagram INSP 65
ac primary power INSP 40
dc power supply INSP 45
inside INSP 35
inside miscellaneous INSP 55
outside INSP 15
tape transport unit
ac grounding diagram INSP 70
dc power supplies INSP 32
inside INSP 20
inside miscellaneous INSP 32
outside INSP 15
Safety inspection procedures
education INSP 10
general instructions INSP 10
preparation INSP 15
tape control unit
ac power supply INSP 40, INSP 65
dc power supply INSP 45
inside INSP 35, INSP 55
outside INSP 15
tape transport unit
ac grounding diagram INSP 60, INSP 70
dc power supplies INSP 32
inside INSP 20, INSP 32
outside INSP 15
sample logic diagram pages LGND 70
scope loop utility, diagnostic routine EEF0 MD/SDISK 1100
scoping, procedure for using oscilloscope PLAN 65
secondary key, graphic symbol LGND 5
select control options, MD support diskette utilities, trace/match control MD/SDISK 146
select in line operation, channel to tape control unit interface OPER 190
select match action MD/SDISK 146
select out line operation, channel to tape control unit interface OPER 190
select out line operation, tape control unit to drive interconnection OPER 190
selected indicator description PANEL 15
send message operation, tape control unit to tape control unit communication OPER 145
sense
control transfer diagram, drive adapter area clocks EAD 44
error history table (SNERRH) DF 145
sense data
analysis SENSE 100
byte summary SENSE 102
description SENSE 100
format 19
byte 3, table and error codes description SENSE 115
bytes 0 through 2, description SENSE 110
bytes 0 through 2, table SENSE 105
bytes 16 through 23, table SENSE 145
bytes 24 through 31 description SENSE 160
bytes 24 through 31, table SENSE 155
bytes 4 through 7, description SENSE 130
bytes 4 through 7, table SENSE 125
bytes 8 through 15 description SENSE 140
bytes 8 through 15, table SENSE 135
summary SENSE 102
format 20
byte 3, table and error codes description SENSE 115
bytes 0 through 2, description SENSE 110
bytes 0 through 2, table SENSE 105
bytes 16 through 23, table SENSE 145
bytes 24 through 31 description SENSE 160
bytes 24 through 31, table SENSE 155
bytes 4 through 7, description SENSE 130
bytes 4 through 7, table SENSE 125
bytes 8 through 15 description SENSE 140
bytes 8 through 15, table SENSE 135
summary SENSE 102
format 21
byte 3, table and error codes description SENSE 115
bytes 0 through 2, description SENSE 110
bytes 0 through 2, table SENSE 105
bytes 16 through 23, description SENSE 180
bytes 16 through 23, table SENSE 175
bytes 24 through 31, description SENSE 190
bytes 24 through 31, table SENSE 185
bytes 4 through 7, description SENSE 130
bytes 4 through 7, table SENSE 125
bytes 8 through 15 description SENSE 170
bytes 8 through 15, table SENSE 165
summary SENSE 102
format, how to determine SENSE 100
sensor
cartridge in stack CARR-DR 2910
cartridge staged CARR-DR 2920
load complete CARR-DR 2840
output stack up position CARR-DR 2960
stack low CARR-DR 2890
sensor removal and replacement, stack low CARR-DR 2890
sensors
tape transport, description of INTRO 51
thread path OPER 55
separation test, data buffer controls diagnostic EE33 DIAG 110
sequence timing chart, initial selection OPER 185
serial data in signal line, MD to MA communication path OPER 80
serial data out signal line, MD from MA communication path OPER 80
serial interconnection OPER 130
serial interconnection sequence, tape control unit to drive operation OPER 188
serial interconnection timing chart OPER 188
serial number location, tape control unit LOC 30
serial sequence drive interconnections EAD 44
service in line operation, channel to tape control unit interface OPER 190
service out line operation, channel to tape control unit interface OPER 190
service representative information, message display PANEL 30
service switch assembly
removal and replacement CARR-TCU 1620
set logic card switches
adapter card, tape control unit CARR-TCU 1189
setting addresses
drive PANEL 12
drive, logical INST 50
drive, physical INST 50
tape control unit INST 40, PANEL 12
shift signal line, MD to MA communication path OPER 80
short loop write to read
description OPER 110
pattern test, routine EE52 DIAG 200
timing test, routine EE53 DIAG 218
signal cable LOC 170
signal lines, MD to/from MA communication path OPER 80
single tape control unit subsystem
command execution OPER 135
configuration diagram OPER 135
diagram, theory INTRO 25
IML procedure PANEL 7
offline checkout INST 70, INST 72
operation OPER 135
setting tape control unit addresses INST 40
SNERRH
See sense error history table
software problems, possible START 130
special tools
descriptions PLAN 5
for installation INST 4
stack low sensor removal and replacement CARR-DR 2890
start MAP, power PWR 100-1
start of maintenance section
actions for possible non-FRU caused error codes START 130
actions to take for a fault symptom code START 325
determining a fault symptom code START 300
determining the tape control unit involved START 420
error path isolation START 400
error path sense byte definitions START 400
fault symptom codes caused by other than TA90 hardware failures START 100
maintenance starting point START 10
possible channel adapter hardware or firmware problems START 135
possible EC compatibility problems START 135
possible software problems START 130
start switch PANEL 40
starting support procedures SPROC 2
status bits 0-15 description, drive DF 150
status byte
description SENSE 205
table SENSE 200
updating the RAM OPER 142
status in line operation, channel to tape control unit interface OPER 190
status in signal line, MD to MA communication path OPER 80
status modifier status bit SENSE 205
status out sequence, MD to MA communication path OPER 81
status out signal line, MD from MA communication path OPER 80
status store
basic card clocks EAD 60
cable group from channel adapter FSI 200
card
introduction INTRO 20
location LOC 15
removal and replacement CARR-TCU 1110
card clocks EAD 10
channel request register (CRR) bit definitions DF 40
communication card
location LOC 15
removal and replacement CARR-TCU 1110
communication card clocks EAD 60
communications without channel adapter OPER 30
display, MD support diskette MD/SDISK 120
error condition theory EAD 5005
error description EAD 5005
external registers DF 10
external system problems EAD 5008
functional description OPER 30
introduction INTRO 20
order test, routine EE93 DIAG 460
oscilloscope information EAD 5008
sense data and diagnostic failure ID analysis EAD 5006

status store/channel adapter diagram EAD 5005
to channel adapter communications OPER 200
to channel adapter interconnection EAD 5006
to status store communication path OPER 140, OPER 145
troubleshooting guide, general EAD 5006
updating RAM OPER 142
write/read RAM storage test, routine EE92 DIAG 450
STI-FIPS
ac grounding diagram INSP 65
adapter
removal and replacement CARR-TCU 9000
command conversion INTRO 55
command processing OPER 12
description INTRO 10
fault switches, description OPER 12
gate fan
removal and replacement CARR-TCU 9040
inspection procedure INSP 35
interconnections INTRO 15, INTRO 25, INTRO 35, OPER 10
location INSP 45, LOC 45
ports, description OPER 12
power supply
removal and replacement CARR-TCU 9030
PS-03
See STI-FIPS power supply
theory of operations OPER 12
thermal switch
removal and replacement CARR-TCU 9050
storage cards, buffer
location LOC 15
removal and replacement CARR-TCU 1110
storage display/alter MD/SDISK 111
storage display/alter diagram MD/SDISK 110
subsystem
characteristics INTRO 5
component descriptions, MD support diskette MD/SDISK 105
deallocate procedure PLAN 55
diagnostics DIAG 2
dismount procedure PLAN 55
display/alter, MD support diskette MD/SDISK 105
dump, MD support diskette utilities MD/SDISK 140, MD/SDISK 165
error log messages, VMS
description MSG 100
field definitions MSG 200
features INTRO 5
introduction INTRO 5
offline procedure PLAN 55
operating modes INTRO 5
relocate or discontinue INST 140
subsystem clocks and sequences
buffer area clocks EAD 20
channel adapter area clocks
clocks to channel adapters EAD 10
clocks to status store EAD 10
control storage subsystem clocks
subsystem clocks to the microprocessor card, timing chart EAD 6
timing chart EAD 7
XR bus and control clocks EAD 8
drive adapter area clocks
alert sequence from the drive to the tape control unit EAD 42
clocks to the drive-adapter card EAD 40
data transfer sequence between the tape control unit and the drive and WTM, write erase gap sequence EAD 43
initial selection sequence from the tape control unit to the drive EAD 41
sense control transfer EAD 44
serial sequence drive interconnections EAD 44
drive clocks to the adapter card EAD 80
dual tape control unit area clocks
clocks to the status store basic card EAD 60
clocks to the status store communication card EAD 60
maintenance adapter area clocks
clocks to and from the maintenance adapter EAD 70
data byte transfer, maintenance adapter card to microprocessor card EAD 71
maintenance device command byte transfer, maintenance adapter card to microprocessor card EAD 71
read data flow area clocks
clocks to the read clock and format card EAD 50
clocks to the read detect cards EAD 50
clocks to the read ECC/CORR card EAD 50
clocks to the read skew buffer cards EAD 50
tape control unit clocks EAD 5
write data flow area clocks
clocks to the read detect cards EAD 30
clocks to the write data card EAD 30
internal clocks on the write data card EAD 30
summary
channel commands INTRO 55
maintenance package description PLAN 25
maintenance product support, diagram PLAN 50
sense bytes SENSE 102
TA90 maintenance PLAN 5
support diagnostics
address meaning MD/SDISK 6
common stop addresses MD/SDISK 6
dual-tape control unit subsystem MD/SDISK 5
error screen MD/SDISK 6
introduction DIAG 2
organization DIAG 2
single-tape control unit subsystem MD/SDISK 5
status screen MD/SDISK 6
verify MD/SDISK 6
support diskette, MD
drive command exerciser
commands MD/SDISK 1220
control options MD/SDISK 1220
details MD/SDISK 1222
diagram MD/SDISK 1221
error messages MD/SDISK 1220
introduction DIAG 2
prompting screens MD/SDISK 1225
maintenance package MD/SDISK 100
plan MD/SDISK 100
procedure description MD/SDISK 100
relationship to product maintenance package MD/SDISK 100
service panel functions
channel RAM display diagram MD/SDISK 115
display subsystem configuration MD/SDISK 105
register display/alter diagram MD/SDISK 125
status store display diagram MD/SDISK 120
subsystem display/alter MD/SDISK 105
utilities, MD support diskette
microprocessor control MD/SDISK 140, MD/SDISK 150
subsystem dump MD/SDISK 140, MD/SDISK 165
trace/match control MD/SDISK 140
support maintenance package
description SPROC 2
developing a fault symptom code SPROC 3
end-of-call actions SPROC 4
isolation procedures SPROC 100
rechecking actions SPROC 4
support procedures SPROC 2
support troubleshooting, using the fault symptom index FSI 2
suppress out line operation, channel to tape control unit interface OPER 190
switch
mode selection OPER 240, PANEL 40
start OPER 240, PANEL 40
switches and indicators PANEL 10, PANEL 15
switching on the power
offline checkout, dual tape control unit INST 76, INST 78
offline checkout, single tape control unit INST 70
sync address, scope loop utility MD/SDISK 1100
SYS$ERRORLOG:ERRORLOG.SYS MSG 100
system attachment locations, tape control unit ac power supply LOC 55, LOC 60

T

tables
command status table (CST) DF 90
device operations table (DOT) DF 120
drive external registers DF 155
external register address cross-reference
buffer control card DF 5
drive adapter card DF 5
maintenance adapter card DF 5
microprocessor card DF 10
read data flow and read control card DF 10
status store card DF 10
write data flow card DF 10
external register bit definitions DF 15
logical device table (LDT) DF 125
path group ID table (PGT) DF 140
path group map (PGM) DF 135
sense error history table (SNERRH) DF 145
tape control unit operations table (CUT) DF 105
XRA value to register name cross-reference DF 12
tach sensor cable locations, drive LOC 155
tape cartridge
about CARR-DR 2320
description CART 5, INTRO 10
recording media characteristics INTRO 5
removal by hand CART 10
tape attachment procedure CART 30
tape cleaning cartridge PLAN 6
tape control unit
+5 V dc (J5 through J12) locations, dc power supply LOC 35
+5 V dc distribution diagram PWR 42
+8.5 V dc distribution diagram PWR 48
-5 V dc distribution diagram PWR 46
ac fuse 1
location LOC 55, LOC 60
removal and replacement CARR-TCU 1460
ac input and output locations, dc power supply LOC 35
ac power supply
grounding diagram INSP 65, INSP 165
local mode diagram PWR 36
location LOC 55, LOC 60
overview diagram PWR 32
panel description PWR 15
power off and on procedures CARR-TCU 6
primary inspection INSP 40, INSP 140
remote mode diagram PWR 38
50 Hz except Japan LOC 60
ac power to gate cable
removal and replacement CARR-TCU 1770
addressing INTRO 10
basic diagnostics test, how to run MD/SDISK 530
blower assembly 1 and 2
location LOC 30
removal and replacement CARR-TCU 1500
buffer description OPER 20
cable connectors (dual tape control unit) locations LOC 30
cable groups listing FSI 200
cable location listing CARR-TCU 157
card locations identification LOC 10
changing the addresses PANEL 12
channel adapter INTRO 30, OPER 15
channel adapters installed sense byte SENSE 160
channel interface OPER 15
circuit breakers location, dc power supply LOC 35
clocks EAD 5
COMTAB register DF 89
configurations
dual tape control unit OPER 140
single tape control unit OPER 135
control OPER 30
control functional areas OPER 30
covers
front cover adjustment CARR-TCU 2-2
removals CARR-TCU 2-1
replacements CARR-TCU 2-2
data buffer INTRO 20, OPER 20
data flow diagram OPER 10
data writing modes
buffered write INTRO 22
tape write INTRO 22
dc power supply
control diagram PWR 50
indicator location LOC 50
inspection INSP 45
location LOC 35
overview diagram PWR 34
voltage checking without dc test tool PWR 10
voltage jumper installation CARR-TCU 1450
diagram INTRO 15
dimensions INTRO 5
disable indicator
cable group FSI 200
description PANEL 10
diskette drive PANEL 10
drive adapter INTRO 20, INTRO 30
dual tape control unit communications cable, connecting INST 30
end status bit SENSE 205
equipment checks sense byte SENSE 170
error checking OPER 30
errors, sense error history table DF 145
external registers, MD support diskette register display/alter MD/SDISK 126
features sense byte SENSE 160
functional area description OPER 15
functions INTRO 15
fuse location, dc power supply LOC 35
hardware level sense bits SENSE 160, SENSE 190
I/O cable installation INST 110
ID sense bit SENSE 110
IML procedure PANEL 7
IML switch
cable group FSI 200
description PANEL 10
initial selection description and timing chart OPER 185
inside inspection INSP 35
inside inspection, miscellaneous INSP 55
installation INST 10
introduction INTRO 15
logic board
card locations LOC 15
top card connectors LOC 20

logic gate terminal strips location LOC 30
mainline circuit breaker (CB1) PWR 15
maintenance adapter INTRO 20, OPER 30
maintenance adapter registers OPER 30
MD connector location LOC 50
MD serializer/deserializer OPER 30
microcode EC level sense byte SENSE 160
microcode error sense bytes SENSE 140
microprocessor/control storage INTRO 20
normal/test switch
cable group FSI 200
description PANEL 10
online/offline switch
cable group FSI 200
description PANEL 10
operations table (CUT) DF 105
operator panel
removal and replacement CARR-TCU 1420
operator panel locations LOC 50
operator setup panel locations LOC 50
output current selection (+5 V dc) location, dc power supply LOC 35
outside inspection INSP 15
over-current protection, circuit breakers location LOC 35
parts definitions and locations LGND 15
power
cable, connecting INST 60
introduction INTRO 20
mode-type switch location LOC 50
operation OPER 30
switch location LOC 50
voltage tolerance table PWR 20
power-on-reset/under-voltage detector OPER 30
read
cards OPER 25
control INTRO 20
data bus INTRO 30
read/write bus connectors location LOC 30
reading data INTRO 22
remove/replace procedures by FRU number CARR-TCU 1-1
scan rings diagram, MD support diskette MD/SDISK 130
serial number high order digit sense bits SENSE 160, SENSE 190
serial number location LOC 30
serial number low order sense bytes SENSE 160, SENSE 190
service switch assembly
removal and replacement CARR-TCU 1620
setting the addresses INST 40, PANEL 12
status store OPER 30
status store/channel adapter communications OPER 30
status store/status store communication INTRO 20
switch panel printed circuit board
removal and replacement CARR-TCU 1410
switches and indicators PANEL 10
tape control unit involved determination START 420
tape control unit to drive bus out driver wrap test, diagnostic routine EE42 DIAG 150
TCU address switches
cable group FSI 200
locations LOC 50
TCU address switches locations LOC 50
TCU0/TCU1 switch
cable group FSI 200
description PANEL 10
test plug data locations, dc power supply LOC 35
test plug location, dc power supply LOC 35
thermal switch assembly location LOC 30
to drive bus and tag test, diagnostic routine EE43 DIAG 160
to drive operation OPER 185
to drive sequences
alert sequence from the drive to the tape control unit EAD 42
data transfer sequence between the tape control unit and the drive and WTM, write erase gap sequence EAD 43
initial selection sequence from the tape control unit to the drive EAD 41
sense control transfer EAD 44
serial sequence drive interconnections EAD 44
to drive serial test, diagnostic routine EE44 DIAG 170
to drive, write operation OPER 187
to tape control unit communications OPER 145
top card connectors locations LOC 20
troubleshooting guide, general EAD 5055
T1 ac voltage taps location, dc power supply LOC 35
unit emergency power off cable (UEPO), installing INST 120
unit emergency power switch location LOC 50
unit emergency switch location LOC 50
voltage regulator OPER 30
write OPER 20
write data flow INTRO 20
writing data INTRO 22
tape control unit offline verification procedure CARR-TCU 5
tape data record format OPER 85
tape data transfer error report, description MSG 206
tape drive
ending operation procedure PANEL 5
message display messages PANEL 30
operating procedure PANEL 5
setting the addresses PANEL 12
setting the logical address INST 50
setting the physical address INST 50
tape drive message display INTRO 10
tape drive transport OPER 50
tape format OPER 85
tape guide, head
left
removal and replacement CARR-DR 2280
right
removal and replacement CARR-DR 2290
tape lifter solenoid
location LOC 100
removal and replacement CARR-DR 2160
response checking procedure MD/SDISK 302
tape lifter solenoid input hose
removal and replacement CARR-DR 2150
tape lifter solenoid response checking procedure MD/SDISK 302
tape loading/unloading, drive transport INTRO 51
tape path sensors
adjustment, sensor A CARR-DR 60, CARR-DR 120
adjustment, sensor B CARR-DR 40, CARR-DR 70
locations LOC 105
removal and replacement, sensor A CARR-DR 60
removal and replacement, sensor B CARR-DR 70
tape removal tool PLAN 5
tape rewinding/unloading OPER 55
tape thread-load OPER 55
tape transport
characteristics INTRO 5
sensors INTRO 51
tape transport unit
ac grounding diagram INSP 70
ac power CB
location LOC 75
panel PANEL 15
adapter card OPER 40
cable
removal and replacement CARR-DR 490
cables location chart CARR-DR 491
covers
front cover adjustment CARR-DR 2-2, CARR-DR 2-4
removals CARR-DR 2-1, CARR-DR 2-3
replacements CARR-DR 2-2, CARR-DR 2-4
data flow diagram OPER 35
dc power supplies inspection INSP 32
dc power supply
location LOC 75
voltage checking without dc test tool PWR 12
diagram, theory INTRO 45
digital servo card OPER 40
dimensions INTRO 5
drive
address switch locations LOC 75
display panel locations LOC 75
locations LOC 95
online/offline switch locations LOC 75
power switch locations LOC 75
ready/not ready switch locations LOC 75
rewind switch locations LOC 75
switch panel location LOC 75
transport assembly description INTRO 51
unload switch locations LOC 75
drive control card
adapter OPER 40
digital servo OPER 40
microprocessor OPER 40
drive logic INTRO 50
drive transport description OPER 50
ferrite assembly
functions INTRO 45
fuses continue to blow PWR 30
inside inspection INSP 20
installation
additional units INST 20
first unit INST 11
introduction INTRO 45
locations LOC 75
logic board layout, pin side LOC 135
logic location area definitions LGND 35
logical components OPER 40
loose wrap test, tape OPER 55
message display INTRO 50, OPER 40
microprocessor card OPER 40
operator control panel and display location LOC 75
outside inspection INSP 15
pneumatic supply INTRO 50, OPER 45
pneumatics
pneumatics LOC 120
power
amplifier board OPER 40
introduction INTRO 50
logical components description OPER 40
power off and on procedures CARR-DR 8
power supply
jumper checks, installation INST 56
locations LOC 90
read preamplifier card OPER 40
remove/replace procedures by FRU number CARR-DR 1-1
rewinding, tape OPER 55
sensor test, tape OPER 55
setting the addresses PANEL 12
setting the logical address INST 50
setting the physical addresses INST 50, INST 350
switch panel location LOC 75
switches and indicators PANEL 15
tape thread/load OPER 55
tape unloading/rewinding OPER 55
TB1 location LOC 75
thermal switch
cable harness removal and replacement CARR-DR 830
removal and replacement CARR-DR 820
thread/load, tape OPER 55
TU-P2 read/write bus connector location LOC 75
write card OPER 40
tape write mode INTRO 22
tape-write-immediate mode OPER 100
TA90 maintenance summary PLAN 5
TCU address switches
Information chart for setting INST 40
switch
cable group FSI 200
description PANEL 10
removal and replacement CARR-TCU 1970
TCU0/TCU1 switch description PANEL 10
tension transducer
Introduction INTRO 51
removal and replacement CARR-DR 140
tension transducer hose
removal and replacement CARR-DR 460
tension transducer tape guide
removal and replacement CARR-DR 2300
test equipment
for installation INST 4
oscilloscope PLAN 65
pressure/vacuum gauge PLAN 5
test plug data
tape control unit dc power supply locations LOC 35
tape transport unit dc power supply locations LOC 90
test tool, dc power supply
description PLAN 5, PWR 12
how to use without tape control unit PWR 10
how to use without tape transport unit PWR 12
verification procedure PWR 10, PWR 12
thermal switch assembly
location LOC 130
removal and replacement CARR-DR 1100
thermal switch lower, CU gate
location LOC 30
removal and replacement CARR-TCU 1430
thermal switch upper, CU gate
removal and replacement CARR-TCU 2240
thermal switch, tape transport unit
cable harness
removal and replacement CARR-DR 820
threader arm location LOC 95
threader assembly
location LOC 100
removal and replacement CARR-DR 10
threader motor location LOC 105
threader pin and leader block
at the cartridge latch assembly
cartridge removal procedure CART 16
example CART 10-3
in machine reel hub
cartridge removal procedure CART 12
example CART 10-2
stopped in tape path
cartridge removal procedure CART 14
example CART 10-2
threading tape OPER 55
threading/loading tape OPER 55
timing test, short loop write to read DIAG 218
tool for releasing cartridge clutch, illustration of PLAN 6
tools, special
descriptions PLAN 5
for installation INST 4
top card connectors

locations LOC 20
removals and replacements CARR-DR 660, CARR-TCU 1570
trace level 7, MD support diskette utilities, trace/match control MD/SDISK 146
trace/match control, MD support diskette utilities
detailed description MD/SDISK 146
diagram MD/SDISK 145
overview MD/SDISK 140
transfer packet MSG 100
transitions from GMP to support package SPROC 2
transport, tape
characteristics INTRO 5
sensors INTRO 51
troubleshooting, board and cable interconnection failures EAD 5000
T1 ac voltage taps location, tape control unit dc power supply LOC 35

U

UEPO cables, removing for relocate or discontinue INST 160
UEPO switch
See unit emergency power switch
under-voltage detector/power-on-reset INTRO 20
unit check
status bit SENSE 205
timing sense bit SENSE 110
unit emergency power off (UEPO) cable, installing INST 120
unit emergency power switch
checking for failure INST 60
description PANEL 10
location LOC 50
removal and replacement CARR-TCU 1980
unit exception status bit SENSE 205
unload switch description PANEL 15
unload time, tape transport INTRO 5
unloading tape OPER 55
use of support diagnostics MD/SDISK 4
using the fault symptom index FSI 2
utility, scope loop MD/SDISK 1100

V

vacuum adjustment PNEU 5
vacuum distribution tee
removal and replacement CARR-DR 2190
vacuum hose assembly
removal and replacement CARR-DR 350
vacuum measurement, pneumatic PNEU 5
vacuum port cap
location LOC 120
vacuum supply hose
removal and replacement CARR-DR 2120
vacuum test hose assembly
removal and replacement CARR-DR 2630
venturi
location LOC 120
verification procedure, dc test tool PWR 10, PWR 12
VMS error log messages MSG 100
voltage distribution cable
connectors LOC 120
voltage distribution list, how to read graphic format LGND 80
voltage jumper
See jumper, power supply
voltage regulator card
introduction INTRO 20
location LOC 15
removal and replacement CARR-TCU 1260
voltage regulator, tape control unit OPER 30
voltage tolerance tables PWR 20
volume content, maintenance guide PLAN 10, PLAN 11

W

wait indicator description PANEL 10
WBC top card connector
location LOC 130
removal and replacement CARR-DR 660
WCD top card connector
location LOC 20
removal and replacement CARR-TCU 1570
WCR
See write control register
WE top card connector
location LOC 20
removal and replacement CARR-TCU 1570
WFG top card connector
location LOC 20
removal and replacement CARR-TCU 1570
when to use the fault symptom index FSI 2
when to use the support maintenance package SPROC 2
width, tape INTRO 5
width, tape control unit and tape transport unit INTRO 5
WKL top card connector
location LOC 20
removal and replacement CARR-TCU 1570
write OPER 20
write adapter cables locations, drive LOC 150
write blocks corrected sense byte SENSE 170
write blocks processed sense byte SENSE 180
write bus terminator
removal and replacement CARR-TCU 1995
write bytes processed sense bytes SENSE 180
write card OPER 40
introduction INTRO 50
location LOC 130
write control register (WCR) DF 82
write data card
clocks EAD 30
location LOC 15
removal and replacement CARR-TCU 1110
write data checks sense byte SENSE 170
write data flow
area clocks EAD 30
description OPER 100
diagram OPER 106
external registers DF 10
introduction INTRO 20
write data flow description OPER 120
write operation timing chart OPER 187
write operation, tape control unit to drive OPER 187
write operations OPER 100
write overrun test, data buffer controls diagnostic EE33 DIAG 110
write power card
location LOC 130
write signal line, MD from MA communication path OPER 80
write status sense bit SENSE 110
write to read timing test, short loop DIAG 218
writing data INTRO 22
WS top card connector location LOC 20
WSE
See write status/error register

X

XB top card connector
location LOC 130
removal and replacement CARR-DR 660
XC top card connector
location LOC 130
removal and replacement CARR-DR 660
XCDE top card connector
location LOC 20
removal and replacement CARR-TCU 1570
XFG top card connector
location LOC 20
removal and replacement CARR-TCU 1570
XKL top card connector
location LOC 20
removal and replacement CARR-TCU 1570
XR bus and control clocks EAD 8
XR detected errors OPER 70
XR interconnection timing EAD 8
XRA
See external registers
XRA decode example OPER 215
XRS top card connector
location LOC 20
removal and replacement CARR-TCU 1570

Y

YB top card connector
location LOC 130
removal and replacement CARR-DR 660
YBCD top card connector
location LOC 130
removal and replacement CARR-DR 660
YCDE top card connector
location LOC 20
removal and replacement CARR-TCU 1570
YFG top card connector
location LOC 20
removal and replacement CARR-TCU 1570
YHJK top card connector
location LOC 20
removal and replacement CARR-DR 660
YKL top card connector
location LOC 20
removal and replacement CARR-TCU 1570
YP top card connector
location LOC 20
removal and replacement CARR-TCU 1570
YRS top card connector
location LOC 20
removal and replacement CARR-TCU 1570

Z

ZB top card connector
location LOC 130
removal and replacement CARR-DR 660
ZBCD top card connector
location LOC 130
removal and replacement CARR-DR 660
ZCD top card connector
location LOC 20
removal and replacement CARR-TCU 1570
ZFG top card connector
location LOC 20
removal and replacement CARR-TCU 1570
ZHJK top card connector
ZKL top card connector
location LOC 20
removal and replacement CARR-TCU 1570
ZPQ top card connector
location LOC 20
removal and replacement CARR-TCU 1570

Numerics

02A-A1 logic board pin side locations, drive LOC 95
50 Hz and 60 Hz voltage tolerance tables PWR 20
50 Hz except Japan, ac power
voltage tolerance table PWR 20
60 Hz and 50 Hz Japan, ac power
voltage tolerance table PWR 20

INDEX 12

TA90/E Magnetic Tape Subsystem Maintenance Guide
EK-PTA90-MG-002

READER'S COMMENTS

Your comments and suggestions will help us in our efforts to improve the quality of our publications.

1. How did you use this manual? (Circle your response.)

   (a) Installation (c) Maintenance (e) Training
   (b) Operation/use (d) Programming (f) Other (Please specify) _____

2. Did the manual meet your needs? Yes ☐ No ☐ Why? _____

3. Please rate the manual on the following categories. (Circle your response.)

	Excellent	Good	Fair	Poor	Unacceptable
Accuracy	5	4	3	2	1
Clarity	5	4	3	2	1
Completeness	5	4	3	2	1
Table of Contents, Index	5	4	3	2	1
Illustrations, examples	5	4	3	2	1
Overall ease of use	5	4	3	2	1

4. What things did you like most about this manual? _____

5. What things did you like least about this manual? _____

6. Please list and describe any errors you found in this manual.

Page	Description/Location of Error
_____	_____
_____	_____
_____	_____
_____	_____

Name _____ Job Title _____

Street _____ Company _____

City _____ Department _____

State/Country _____ Telephone Number _____

Postal (ZIP) Code _____ Date _____

THANK YOU FOR YOUR COMMENTS AND SUGGESTIONS

Please do not use this form to order manuals. Contact your representative at Digital Equipment Corporation or (in the USA) call our DECdirect™ department at this toll-free number: 800-258-1710.

1989 by Digital Equipment Corporation.

TA90/E Magnetic Tape Subsystem Maintenance Guide
EK-PTA90-MG-002

READER'S COMMENTS

Your comments and suggestions will help us in our efforts to improve the quality of our publications.

1. How did you use this manual? (Circle your response.)

   (a) Installation (c) Maintenance (e) Training
   (b) Operation/use (d) Programming (f) Other (Please specify) _____

2. Did the manual meet your needs? Yes ☐ No ☐ Why? _____

3. Please rate the manual on the following categories. (Circle your response.)

	Excellent	Good	Fair	Poor	Unacceptable
Accuracy	5	4	3	2	1
Clarity	5	4	3	2	1
Completeness	5	4	3	2	1
Table of Contents, Index	5	4	3	2	1
Illustrations, examples	5	4	3	2	1
Overall ease of use	5	4	3	2	1

4. What things did you like most about this manual? _____

5. What things did you like least about this manual? _____

6. Please list and describe any errors you found in this manual.

Page	Description/Location of Error
_____	_____
_____	_____
_____	_____
_____	_____

Name _____ Job Title _____

Street _____ Company _____

City _____ Department _____

State/Country _____ Telephone Number _____

Postal (ZIP) Code _____ Date _____

THANK YOU FOR YOUR COMMENTS AND SUGGESTIONS

Please do not use this form to order manuals. Contact your representative at Digital Equipment Corporation or (in the USA) call our DECdirect™ department at this toll-free number: 800-258-1710.

1989 by Digital Equipment Corporation.

FOLD HERE AND TAPE. DO NOT STAPLE

digital

NO POSTAGE
NECESSARY
IF MAILED
IN THE
UNITED STATES

BUSINESS REPLY MAIL

FIRST CLASS PERMIT NO. 33 MAYNARD, MA.

POSTAGE WILL BE PAID BY THE ADDRESSEE

DIGITAL EQUIPMENT CORPORATION
Educational Services/Quality Assurance
12 Crosby Drive BUO/E08
Bedford, MA 01730-1493
USA

FOLD HERE AND TAPE. DO NOT STAPLE

FOLD HERE AND TAPE. DO NOT STAPLE

digital

NO POSTAGE
NECESSARY
IF MAILED
IN THE
UNITED STATES

BUSINESS REPLY MAIL

FIRST CLASS PERMIT NO. 33 MAYNARD, MA.

POSTAGE WILL BE PAID BY THE ADDRESSEE

DIGITAL EQUIPMENT CORPORATION
Educational Services/Quality Assurance
12 Crosby Drive BUO/E08
Bedford, MA 01730-1493
USA

FOLD HERE AND TAPE. DO NOT STAPLE