MASTER DRAWING LIST

MAINTENANCE MANUALS NO.	TITLE	UNIT VARIATIONS AA11-A	AA11-B	AA11-C	AA11-DA	AA11-DB
AA11-Ø	SCOPE CONTROL	X	X	X	–	–
AA11-D	DIGITAL TO ANALOG CONTROL	–	–	–	X	X

USED ON OPTIONS

REV.	DATE	CHG. NO.	APP'D.
A	1-72	AA11D-7	A.W.
B	2-72	AA11D-8	PAT.
C	10-73	AA11D-9	[illegible]
D	1-74	AA11D-10	[illegible]
E	2-74	AA11D-11	[illegible]

REVISIONS

DRN. R ROBICHAUD	DATE 11-3-70	digital EQUIPMENT CORPORATION MAYNARD, MASSACHUSETTS
CHK'D. K RUSS	DATE 11-4-70	
ENG. R GAGNE	DATE 11-12-70	TITLE
PROJ. ENG. R GAGNE	DATE 11-12-70	SCOPE CONTROL
PROD. A HIRSCH	DATE 11-12-70	
FIRST USED ON AA11-D		SIZE A · CODE ML · NUMBER AA11-Ø · REV. E
SCALE ~~~		
SHEET 1 OF 3		DIST.

DRA 131

Dec 16–(325)–1048–N471

PRINT SET AA11-Ø	AA11-D	DWG. NO.	REV. LET.	NO. OF SHEETS	TITLE	OPTION NO.
–	X	D-DI-AA11-D-1	C	1	DRAWING INDEX	
–	X	D-UA-AA11-D-0	A	1	DIGITAL TO ANALOG CONTROL ASSY	
–	X	A-PL-AA11-D-0	A	1	DIGITAL TO ANALOG CONTROL ASSY (PL)	
–	X	D-BS-AA11-D-03		1	D/A CONVERTERS	
–	X	D-BS-AA11-D-04	B	1	INTERFACE	
–	X	D-IC-AA11-D-02	D	1	OPTION CABLES	
–	X	D-IC-AA11-D-05	A	1	AA11 BUS POWER CONN	
–	X	A-SP-AA11-D-06	A	37	ENGINEERING SPECS	
–	X	A-SP-AA11-D-07	A	18	CHECKOUT & CALIBRATION PROCEDURE	
–	X	A-AL-AA11-D-08	A	1	ACCESSORY LIST	
–	X	D-UA-H704-C-0	#	1	H704-C POWER SUPPLY 115V	H704
–	X	A-PL-H704-C-0	#	2	H704-C POWER SUPPLY 115V (PL)	H704
–	X	D-UA-H704-H-0	#	1	H704-H POWER SUPPLY 230V (PL)	H704
–	X	D-UA-H704-H-0	#	2	H704-H POWER SUPPLY 230V (PL)	H704
–	X	D-MU-AA11-0-MU	D	1	MODULE UTILIZATION	
–	X	A-PL-AA11-0-MU	D	1	MODULE UTILIZATION	
–	X	K-WL-AA11-D-WL	F	1	WIRE LIST (COMPLETE)	
–	X	D-AD-7006976-0-0	B	1	WIRED ASSY	
–	X	A-PL-7006976-0-0	B	1	WIRED ASSY (PL)	
–	X	D-CS-A614-0-1	#	1	12 BIT DAC WITH BUFFER REG	
–	X	D-CS-M7821-0-1	#	1	INTERRUPT CONTROL	

TITLE	SHEET	SIZE	CODE	NUMBER	REV.
DIGITAL TO ANALOG CONTROL ASSY	2 OF 3	A	ML	AA11-Ø	E

DRA 132

DEC 16–(325)–1048–1–N471

PRINT SET AA11-Ø	AA11-D	DWG. NO.	REV. LET.	NO. OF SHEETS	TITLE	OPTION NO.
X	–	A-PL-AA11-A-0		1	VT01-A SCOPE CONTROL	AA11-A
X	–	A-PL-AA11-B-0		1	RM503 SCOPE CONTROL	AA11-B
X	–	A-PL-AA11-C-0		1	VR12 SCOPE CONTROL	AA11-C
X	–	D-CS-M799-0-1	#	2	SCOPE CONTROL	
X	–	A-WL-AA11-A-1	A	1	WIRE LIST	AA11-A
X	–	A-WL-AA11-B-1		1	WIRE LIST	AA11-B
X	–	A-WL-AA11-C-1	A	1	WIRE LIST	AA11-C
X	X	A-AL-AA11-0-1		1	ACCESSORY LIST	
X	X	A-SL-AA11-0-2		1	SOFTWARE LIST	
	X	E-IA-7009562-0-0	#	1	G772 SYSTEM UNIT HARNESS	

TITLE	SHEET	SIZE	CODE	NUMBER	REV.
SCOPE CONTROL	3 OF 3	A	ML	AA11-Ø	E

DRA 132

DEC 16–(325)–1048–1–N471

DIGITAL EQUIPMENT CORPORATION
MAYNARD, MASSACHUSETTS

PARTS LIST

MADE BY R. ROBICHAUD	CHECKED K. Russ	SECTION
DATE 10-28-70	DATE 11/4/70	1
ENG K. Stone	PROD A. Hirsch	ISSUED SECT.
DATE 11-12-70	DATE 11-12-70	1

ITEM NO.	DWG NO./PART NO.	DESCRIPTION	QUANTITY/VARIATION
1	A-PL-AA11-A-MU	MODULE COUNT AA11	1
2	A-PL-AA11-A-1	WIRING LIST AA11-A	1
	D-IA-7007108-0-0	(VT01-A) CABLE ASSY	1

TITLE	ASSY NO.	SIZE	CODE	NUMBER	REV.	ECO NO.
VT01-A SCOPE CONTROL (AA11-A)	—	A	PL	AA11-A-A		
	SHEET 1 OF 1	DIST.				

DEC FORM NO. 16-1031
DRA 110

DIGITAL EQUIPMENT CORPORATION
MAYNARD, MASSACHUSETTS

PARTS LIST

MADE BY	R. ROBICHAUD	CHECKED	K. Ryan	SECTION	1
DATE	10-28-70	DATE	11/9/70		
ENG	K Bergel	PROD	A. Hirsch	ISSUED SECT.	1
DATE	11-12-70	DATE	11-12-70		

ITEM NO.	DWG NO./PART NO.	DESCRIPTION	QUANTITY/VARIATION
1	A-PL-AA11-B-MU	MODULE COUNT AA11	1
2	A-WL-AA11-B-1	WIRING LIST AA11-B	1
3	D-IA-7007139-0-0	(RM503) SCOPE CABLE	1

TITLE	ASSY NO.	SIZE	CODE	NUMBER	REV.	ECO NO.
RM503 SCOPE CONTROL (AA11-B)	-11	A	PL	AA11-B-7		
	SHEET OF 1	DIST.				

DEC FORM NO. 16-1031
DRA 110

DIGITAL EQUIPMENT CORPORATION
MAYNARD, MASSACHUSETTS

PARTS LIST

MADE BY R. ROBICHAUD	CHECKED K. Ryan	SECTION
DATE 10-28-70	DATE 11/4/70	1
ENG P. Hogue	PROD C. Hewitt	ISSUED SECT.
DATE 11-12-70	DATE 11-12-70	1

ITEM NO.	DWG NO./PART NO.	DESCRIPTION	QUANTITY/VARIATION
1	A-PL-AA11-C-MU	MODULE COUNT AA11	1
2	A-WL-AA11-C-1	WIRE LIST (AA11-C)	1
	D-IA-7007122-0-0	(VR12) CONTROL CABLE	1

TITLE	ASSY NO.	SIZE	CODE	NUMBER	REV.	ECO NO.
VR12 SCOPE CONTROL (AA11-C)	#	A	PL	AA11-C		
	SHEET 1 OF 1	DIST.				

DEC FORM NO. 16-1021
DRA 110

This drawing and specifications, herein, are the property of Digital Equipment Corporation and shall not be reproduced or copied or used in whole or in part as the basis for the manufacture or sale of items without written permission.

PARTS REFERENCE

ITEM NO	DRAWING REFERENCE	DESCRIPTION	PART NUMBER	QUANTITY
1	C1 THRU C19, C24, C27	.01 UF 100V 20% DISC	1001610	21
2	C20, C21	1 UF 35V 10% S.TANT	1001776	2
3	C22	.22 UF 100V 10% MYLAR	1000037	1
4	C23	.1 UF 50V 20% DISC	1000030	1
5	C25	.15 UF 100V 10% MYLAR	1002629	1
6	C26	.033 UF 100V 10% MYLAR	1000050	1
7	D1 THRU D8	DG64 DIODE	1100114	8
8	D10, D11, D12	DG70 DIODE	1102162	3
9	E1, E10, E13, E15	DEC 7474 IC	1905547	4
10	E2, E14	DEC 8881 IC	1909705	2
11	E3, E4, E5, E8, E9, E12, E16, E17, E18, E19	DEC 7400 IC	1905575	10
12	E6	DEC 7420 IC	1905577	1
13	E7, E11	DEC 7410 IC	1905576	2
14	E20, E21	IC SOCKET	1205838	2
15	R1, R6	330 1/4 W 5% RES	1300295	2
16	R2, R12	750 1/4 W 5% RES	1301401	2
17	R3, R5, R7	470 1/4 W 5% RES	1300316	3
18	R4	220 1/4 W 5% RES	1300271	1
19	R8, R9, R10, R11, R14, R17, R18, R19, R23, R21	3K 1/4 W 5% RES	1300432	10
20	R13	680 1/4 W 5% RES	1301424	1
21	R16	820 1/4 W 5% RES	1301775	1
22	R20, R22	1K 1/4 W 5% RES	1300365	2
23	Q1, Q2	DEC 6534 C TRANSISTOR	1503409-02	2
24	Q3, Q4	DEC 2 TRANSISTOR	1505650	2
25	Q5	DEC 3638 B TRANSISTOR	1502979	1
26	TP1—TP3, C28 OPTION	SPLIT LUGS	9006735	
27	C28	.015UF 100V 10% MYLAR	1002630	1
28		INSULATED JUMPERS		A/R

NOTES:

1. PIN NOTATION THROUGHOUT IS ORDERED UPON MODULE PLACEMENT IN THE KA11 PROCESSOR. MODULE REFERENCE ALONE IS OBTAINED BY DELETING THE NUMBER (SLOT LOCATION) AFTER THE FIRST LETTER, AND CONVERTING THE FIRST LETTER ACCORDING TO THE PIN NOMENCLATURE CHART AT RIGHT.
2. ALL SIGNALS THAT HAVE MODULE PINS ARE SO NOTED: MULTIPLE NOTATIONS OF THE SAME SIGNALS WITHIN A MODULE HAVE THE PIN NOTED ON EACH. AN INPUT SIGNAL IS NOTED ONLY ONCE PER SHEET UNLESS SEPERATE PINS ARE USED: MULTIPLE INPUTS ARE CONNECTED. MODULE OUTPUT SIGNALS ARE BROUGHT TO THE EXTREME RIGHT OF EACH SHEET.
3. PROCESSOR SIGNAL SOURCE NOTATION (K10-2, FOR EXAMPLE) IDENTIFIES THE SIGNAL SOURCE (PRINT AND MODULE). THE FIRST NUMBER AFTER THE K INDICATES THE MODULE PRINT SET, WHILE THE SECOND INDICATES THE SHEET WITHIN THE SET. IF ON A PRINT, THE FIRST NUMBER OF THE K PREFIXES COINCIDE FOR A SIGNAL NAME AND THE PRINT (SEE TITLE BLOCK), THE SIGNAL IS GENERATED ON THE MODULE. A DIFFERENCE IN THE FIRST NUMBER OF THE K PREFIXES INDICATES A SIGNAL GENERATED OFF THE MODULE. SIGNALS WITH A "BUS" PREFIX REPRESENT A "WIRED OR" SITUATION, AND MULTIPLE SOURCES FOR THE SIGNAL CAN EXIST.
4. DETAILS ON COMPONENTS ARE NOTED IN THE PARTS REFERENCE, PLACEMENT IS NOTED IN THE COMPONENT PLACEMENT DIAGRAM. CAPACITORS WITHOUT NOTED VALUES ARE .01 MFD.
5. GND AND +5V ARE USUALLY PIN 7 AND PIN 14, RESPECTIVELY.
6. ⊘ INDICATES SPLT LUGS.
7. C28 IS AN ENGINEERING OPTION.

COMPONENT PLACEMENT

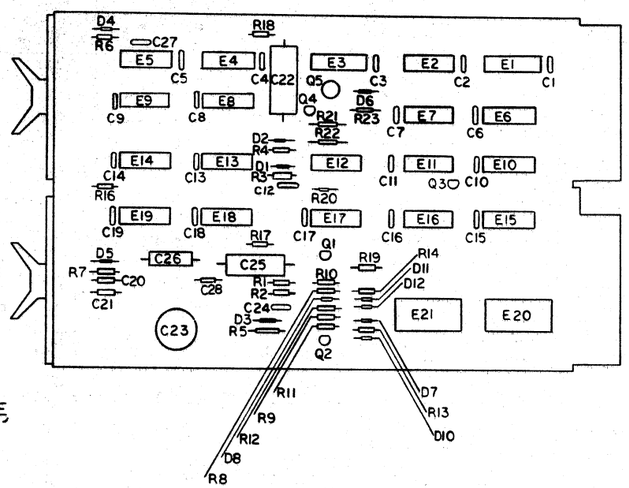

IC TYPE	GND	+5V
DEC 7481	PIN 10	PIN 4
DEC 7482	PIN 11	PIN 4
DEC 8251	PIN 8	PIN 16
DEC 8271	PIN 8	PIN 16
DEC 380	PIN 1	PIN 8
DEC 384	PIN 1	PIN 8

REVISIONS	CHANGE NO	CHK	REV
	M799-00001		D
	M799-00002		
	ROGER GAGNE 3-3-71		
	M799-00003		E
	B.F. 10/7/71		
	R. GAGNE 11/23/71		

DEC FORM NO. DRD 102A

ETCH REV F

FIRST USED ON OPT/MOD AA11-A

UNLESS OTHERWISE SPECIFIED DIMENSION IN INCHES TOLERANCES DECIMALS ± .005 FRACTIONS ± 1/64 ANGLES ± 0°30' FINAL SURFACE QUALITY REMOVE BURRS AND BREAK SHARP CORNERS

MATERIAL —/—/—

FINISH —/—/—

QTY.	DESCRIPTION	PART NO	ITEM NO.
	PARTS LIST		

DRN. W.F. McGrath DATE 10/16/70
CHKD. R. Gagne DATE 1-5-71
ENG. R. Gagne DATE 1-5-71
PROJ. ENG. R. Gagne DATE 1-5-71
PROD. DATE

NEXT HIGHER ASSY A-ML-AA11-A

SCALE NONE

SHEET 1 OF 2

digital EQUIPMENT CORPORATION MAYNARD, MASSACHUSETTS

TITLE DISPLAY CONTROL M799

SIZE D CODE CS NUMBER M799-0-1 REV. E

DIST.

1 Mark

This drawing and specifications, herein, are the property of Digital Equipment Corporation and shall not be reproduced or copied or used in whole or in part as the basis for the manufacture or sale of items without written permission.

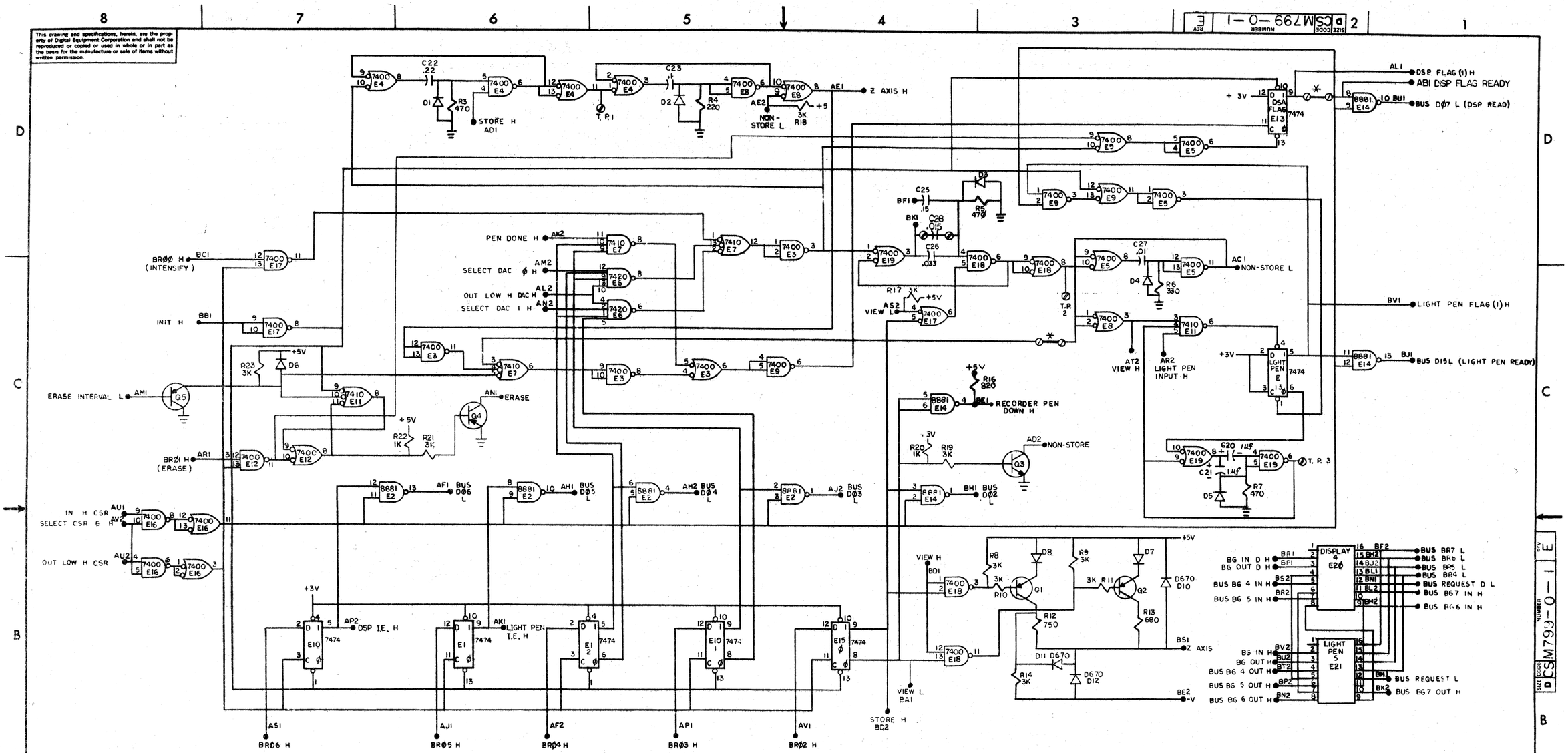

NOTE:
* CUT OUT JUMPERS AND C28 WHEN USED WITH THE VR20 COLOR CONTROL M7990.

FIRST USED ON OPTION/MOD	QTY.	DESCRIPTION	PART NO.	ITEM NO.
AAII-A		PARTS LIST		

UNLESS OTHERWISE SPECIFIED
UNLESS OTHERWISE SPECIFIED DIMENSION IN INCHES TOLERANCES DECIMALS ± .005 FRACTIONS ± 1/64 ANGLES ± 0°30' FINAL SURFACE QUALITY REMOVE BURRS AND BREAK SHARP CORNERS

MATERIAL —//—

FINISH —//—

		DATE
DRN.		7-7-70
CHKD.		DATE 1-5-71
		12-22-70
ENG.		DATE 1-5-71
PROJ. ENG.		DATE 1-5-71
PROD.		DATE

NEXT HIGHER ASSY. A-ML-AAII-A

SCALE —//—

SHEET 2 OF 2

digital EQUIPMENT CORPORATION MAYNARD MASSACHUSETTS

TITLE DISPLAY CONTROL M799

SIZE	CODE	NUMBER	REV.
D	CS	M799-0-1	E

DIST.

REVISIONS: REV / CHANGE NO. / CHK.

DEC FORM NO CRD 102A

This drawing and specifications, herein, are the property of Digital Equipment Corporation and shall not be reproduced or copied or used in whole or in part as the basis for the manufacture or sale of items without written permission.

SIGNAL NAME	FROM PIN	TO PIN	COLOR	REMARKS
GND	EØ4R2	EØ4C2	BLU	30 AWG KYNAR
GND	EØ4K2	EØ4C2	BLU	30 AWG KYNAR
NON STORE L	EØ4C1	EØ4E2	BLU	30 AWG KYNAR
80μS	FØ4F1	FØ4K1	BLU	30 AWG KYNAR
INTENSIFY	EØ4E1	EØ3U2	BLU	30 AWG KYNAR
NON STORE	EØ4D2	EØ3E2	BLU	30 AWG KYNAR
STORE H	FØ4D2	EØ4D1	BLU	30 AWG KYNAR

NOTE:

1. WHEN USING A LIGHT PEN, CONNECT SCOPE AS ABOVE, REMOVE GND WIRE FROM EØ4R2 AND CONNECT THE LIGHT PEN OUTPUT TO THIS PIN.

2. WHEN USING AN XY PLOTTER CONNECT SCOPE AS ABOVE, REMOVE GROUND WIRE FROM EØ4K2 AND CONNECT THE PEN "DONE SIGNAL" FROM THE PLOTTER TO THIS PIN.

REVISIONS			
REV.	DATE	CHG. NO.	APP'D.
A	2-23-71	AA11-0001	

DRN.	RONICHAUD	DATE	10-26-70
CHK'D.	Russ	DATE	10/30/70
ENG.		DATE	
PROJ. ENG.		DATE	30-70
PROD.		DATE	11-12-70
FIRST USED ON	AA11-A		
SCALE	#		
SHEET	1 OF 1		

digital EQUIPMENT CORPORATION
MAYNARD, MASSACHUSETTS

TITLE
GENERAL WIRING SHEET
FOR
AA11-A

SIZE	CODE	NUMBER	REV.
A	WL	AA11-A-1	A

DIST.

DEC FORM NO. 16-1029

This drawing and specifications, herein, are the property of Digital Equipment Corporation and shall not be reproduced or copied or used in whole or in part as the basis for the manufacture or sale of items without written permission.

SIGNAL NAME	FROM PIN	TO PIN	COLOR	REMARKS
GND	EØ4D1	EØ4C2	BLU	30 AWG KYNAR
GND	EØ4K2	EØ4C2	BLU	30 AWG KYNAR
GND	EØ4R2	EØ4C2	BLU	30 AWG KYNAR
VIEW H	EØ4T2	FØ4D1	BLU	30 AWG KYNAR
-15V	FØ4E2	FØ4B2	BLU	30 AWG KYNAR
VIEW L	FØ4A1	EØ4S2	BLU	30 AWG KYNAR
Z AXIS CONTROL	FØ4S1	EØ3U2	BLU	30 AWG KYNAR

NOTES:

1. WHEN USING A LIGHT PEN, CONNECT SCOPE AS ABOVE, REMOVE GND WIRE FROM EØ4R2 AND CONNECT THE LIGHT PEN OUTPUT TO THIS PIN.

2. WHEN USING AN XY PLOTTER CONNECT SCOPE AS ABOVE, REMOVE GROUND WIRE FROM EØ4K2 AND CONNECT THE PEN "DONE SIGNAL" FROM THE PLOTTER TO THIS PIN.

REVISIONS			
REV.	DATE	CHG. NO.	APP'D.

DRN. ROBICHAUD	DATE 10-27-70	digital EQUIPMENT CORPORATION MAYNARD, MASSACHUSETTS
CHK'D. Russo	DATE 10/30/70	TITLE GENERAL WIRING SHEET
ENG.	DATE	FOR AA11-B
PROJ. ENG.	DATE	
PROD.	DATE 11-12-70	
FIRST USED ON AA11-B		SIZE A · CODE WL · NUMBER AA11-B-1 · REV.
SCALE —		
SHEET 1 OF 1		DIST.

DEC FORM NO. 16-1029

This drawing and specifications, herein, are the property of Digital Equipment Corporation and shall not be reproduced or copied or used in whole or in part as the basis for the manufacture or sale of items without written permission.

SIGNAL NAME	FROM PIN	TO PIN	COLOR	REMARKS
GND	EØ4D1	EØ4C2	BLU	30 AWG KYNAR
GND	EØ4K2	EØ4C2	BLU	30 AWG KYNAR
GND	EØ4R2	EØ4C2	BLU	30 AWG KYNAR
VIEW H	EØ4T2	FØ4D1	BLU	30 AWG KYNAR
-25V	FØ4E2	AØ3N2	BLU	30 AWG KYNAR
VIEW L	FØ4A1	EØ4S2	BLU	30 AWG KYNAR
Z AXIS CONTROL	FØ4S1	EØ3U2	BLU	30 AWG KYNAR
VIEW H	FØ4D1	EØ3H2	BLU	30 AWG KYNAR

NOTES:

1. WHEN USING A LIGHT PEN, CONNECT SCOPE AS ABOVE, REMOVE GND WIRE FROM EØ4R2 AND CONNECT THE LIGHT PEN OUTPUT TO THIS PIN.

2. WHEN USING AN XY PLOTTER CONNECT SCOPE AS ABOVE, REMOVE GROUND WIRE FROM EØ4K2 AND CONNECT THE PEN "DONE SIGNAL" FROM THE PLOTTER TO THIS PIN.

REVISIONS			
REV.	DATE	CHG. NO.	APP'D.
A	6-29-71	AA11C-00002	

DRN. ROBICHAUD	DATE 10-28-70	digital EQUIPMENT CORPORATION MAYNARD, MASSACHUSETTS
CHK'D. Russ	DATE 10/30/70	TITLE GENERAL WIRING SHEET
ENG.	DATE 10-30-70	FOR AA11-C
PROJ. ENG.	DATE 10-30-70	
PROD.	DATE 11-12-70	
FIRST USED ON AA11-C		SIZE A / CODE WL / NUMBER AA11-C-1 / REV. A
SCALE #		
SHEET 1 OF 1		DIST.

DEC FORM NO. 16-1029
DRA 104

DIGITAL EQUIPMENT CORPORATION
MAYNARD, MASSACHUSETTS

ACCESSORY LIST

MADE BY H Stringer DATE 9/10/71	CHECKED 6-24-71 DATE L V Fumiyo	SECTION
ENG R A Hogue DATE 9-10-71	PROD H Stringer DATE 9/10/71	ISSUED SECT.

LEGEND
- D DOCUMENT
- DN DOCUMENT CHANGE NOTICE
- PA PAPER TAPE ASCII
- PB PAPER TAPE BINARY
- PM PAPER TAPE READ-IN-MODE

ITEM NO.	DWG NO./PART NO.	DESCRIPTION	QUANTITY/VARIATION AA11DA (115 V)	AA11DB (230 V)	AA11A	AA11B	AA11C			KIT CHECK BY ____ DATE ____	INSTALLATION CHECK BY ____ DATE ____
1	AA11-A,B,C,DA,DB	PRINT SET	1	1	1	1	1				
2	LIB,KIT-11-AA11-00	SEALED SOFTWARE KIT	1	1	-	-	-				
3	C-13531	H704 CIRCUIT SCHEMATIC (VENDOR SUPPLIED)	1	1	-	-	-				
4	91-7710, 90-8849	HOOK UP WIRE	1	1	-	-	-				
5	M920	UNIBUS CARD	1	1	-	-	-				
6	DEC-11-HAAA-D	MAINT. MANUAL	1	1	-	-	-				
7	90-8851	MOUNTING HARDWARE	1	1	-	-	-				
8	H704C	POWER SUPPLY 115V (50 OR 60 HZ)	1	-	-	-	-				
9	H704H	POWER SUPPLY 230V (50 OR 60 HZ)	-	1	-	-	1				
10	70-7116-10	WIRING HARNESS	1	1	-	-	-				
11	70-7138-12	SCOPE CABLE (VT01)	-	-	1	-	-				
12	70-7139-12	SCOPE CABLE (RM503)	-	-	-	1	-				
13	70-7122-12	SCOPE CABLE (VR14, VR12)	-	-	-	-	1				
14	G727	GRANT CONTINUITY CARD	1	1	-	-	-				
		NOTE: MAKE SURE MOUNTING SCREWS ARE ATTACHED (90-8157) 2 PER UNIT									

TITLE	ASSY. NO.	SIZE	CODE	NUMBER	REV.	ECO NO
D/A CONVERTER	SHEET 1 OF 1	A	AL	AA11-Ø-1		

DIST.

DEC FORM NO. DRA 121

DIGITAL EQUIPMENT CORPORATION
MAYNARD, MASSACHUSETTS

SOFTWARE LIST

MADE BY H Stringer DATE 9/10/71	CHECKED W Brittenham DATE 9-10-71	SECTION
ENG R Alcorne DATE 9-10-71	PROD H Stringer DATE 9/10/71	ISSUED SECT.

LEGEND

- D DOCUMENT
- DN DOCUMENT CHANGE NOTICE
- PA PAPER TAPE ASCII
- PB PAPER TAPE BINARY
- PM PAPER TAPE READ-IN-MODE

ITEM NO.	DWG NO./PART NO.	DESCRIPTION	QUANTITY/VARIATION: AA11DA (115V)	AA11DB (230V)	AA11A	AA11B	AA11C			KIT CHECK BY ____ DATE ____	INSTALLATION CHECK BY ____ DATE ____
1	MAINDEC-11-D6BA-D	AA11 DAC CALIBRATION	1	1	1	1	1				
2	MAINDEC-11-D6BA-PB	AA11 DAC CALIBRATION	1	1	1	1	1				
3	MAINDEC-11-D6CA-D	A, B, C, SCOPE CONTROL TEST	1	1	1	1	1				
4	MAINDEC-11-D6CA-PB	A, B, C, SCOPE CONTROL TEST	1	1	1	1	1				

TITLE	ASSY. NO.	SIZE	CODE	NUMBER	REV.	ECO NO
D/A CONVERTER	SHEET OF	A	SL	AA11-Ø-2		
		DIST.				

DEC FORM NO.
DRA 120