SIGMA 6/9 SALES GUIDE

COMPANY PRIVATE

Prepared by

George O'Leary
Product Management

20 February 1972 (New 72-2)

SIGMA 6/9 SALES GUIDE

INITIAL READING QUESTIONNAIRE

(To be filled out after first reading.)

Return to: SIGMA 6/9 Product Manager (A3-07)

- Is the SIGMA 6/9 Sales Guide worthwhile? _____ Why? _____

_____

_____

- Should anything be added? _____

_____

- Will you use this Guide for:

	YES	NO
Developing your Territory?	_____	_____
Managing your Territory?	_____	_____
Identifying Markets?	_____	_____
Qualifying Customers?	_____	_____
Developing Sales Strategies?	_____	_____

Other? _____

- Did this Guide provide enough Industry Information? yes _____ no _____

_____

- Did this Guide provide enough Product Information? yes _____ no _____

_____

General Comments:

Your Job Title is: _____

SIGMA 6/9 SALES GUIDE

USER QUESTIONNAIRE

(To be filled out after using some section.)

Return to: SIGMA 6/9 Product Manager (A3-07)

- How was the SIGMA 6/9 Sales Guide used? _____

_____

_____

- Do you feel you accomplished your goal? _____

_____

_____

- How could this section be improved? _____

_____

_____

_____

- Was any portion unclear or inaccurate? _____

_____

_____

_____

- Does this section need expanding? _____

_____

_____

General Comments:

Your Job Title is: _____

SIGMA 6/9 SALES GUIDE

TABLE OF CONTENTS

	Page
SECTION I – SIGMA 6/9 - THE PRODUCTS AND THEIR MARKETPLACE	
Introduction	103/001-1
Overview	103/001-1
Sigma 6/7/9	103/001-1
Summary of Installations	103/001-1
Sigma 6/7	103/001-1
Education	103/001-1
Health Care	103/001-2
Manufacturing	103/001-2
Service Bureaus (Including In-House Service Bureaus)	103/001-2
Department of Defense	103/001-2
Civil Agencies	103/001-2
Petrochemical	103/001-2
Aerospace	103/001-2
Market Penetration Achievements to Date	103/001-2
Sigma 6/7	103/001-2
Sigma 9	103/001-3
Summary and Conclusion	103/001-3
Projected Market Direction Summary	103/001-3
Overview	103/001-3
Education	103/001-3
Manufacturing	103/001-4
Health Care	103/001-4
Federal Government (Defense-Related)	103/001-4
Sigma 6/9 Opportunities	103/001-5
Government (Civil Agencies and Local Government)	103/001-5
Sigma 6/9 Opportunities	103/001-5
Service Bureaus (Including In-House Time-Sharing)	103/001-5
Sigma 6/9 Markets	103/001-5
Specific Orders/Installations	103/001-5
Purpose	103/001-5
Health Care	103/001-5
Manufacturing	103/001-6
Education	103/001-6
U.S. Department of Defense	103/001-6
Civil Agencies	103/001-6
Product Benefits in Relation to Specific Marketplaces	103/001-6
Overview	103/001-6
Education	103/001-6
Batch Throughput Performance	103/001-6
Terminal Capability	103/001-7
Remote Batch Capability	103/001-7
Price/Performance Ratio	103/001-7
Real-Time Capability	103/001-7
Compatibility	103/001-7
Systems Approach	103/001-7
Health Care	103/001-7
Batch Throughput Performance	103/001-7
Terminal Capability	103/001-8

SIGMA 6/9 SALES GUIDE

TABLE OF CONTENTS (Continued)

	Page
Remote Batch Capability	103/001-8
Price/Performance Ratio	103/001-8
Real-Time Capability	103/001-8
Compatibility	103/001-8
Systems Approach	103/001-8
Manufacturing	103/001-8
Batch Throughput Performance	103/001-8
Terminal and Remote Batch Terminal Capability	103/001-8
Price/Performance Ratio	103/001-8
Real-Time Capability	103/001-8
Compatibility	103/001-8
Systems Approach	103/001-8
Suggested Sales Strategy	103/001-8
Overview	103/001-8
Health Care	103/001-9
Manufacturing	103/001-9
Education	103/001-9
U.S. Department of Defense	103/001-10
Civil Agencies	103/001-10
Sigma 6/9 Technical Characteristics	103/001-11
Purpose	103/001-11
Sigma 6/9 Comparison	103/001-11
Product Performance Summary	103/001-11
Philosophy	103/001-11
Instruction Mix Comparison	103/001-11
Competitive Summary	103/001-13
Overview	103/001-13
Sigma 6/9 and its Competitors	103/001-13
IBM 360/135/145/155	103/001-13
IBM 370 Models 135, 145, 155 General Sales Strategy	103/001-13
IBM's Specific Sales Strategy Versus Xerox Data Systems	103/001-13
IBM 370 General Strengths Vs. Sigma 6/9	103/001-13
IBM 370 Specific Strengths Vs. Sigma 6/9	103/001-14
IBM 370 General Weaknesses Vs. Sigma 6/9	103/001-14
IBM 370 Specific Weaknesses Vs. Sigma 6/9	103/001-14
Sigma 6/9 Strengths Vs. IBM 370	103/001-14
Sigma 6/9 General Strategy Vs. IBM 370	103/001-14
DEC System/10 (Models 1040, 1050, 1055)	103/001-14
DEC System/10 Strategy Against the Sigma 6/9	103/001-14
DEC System/10 General Strengths Vs. Sigma 6/9	103/001-15
DEC System/10 Specific Strengths Vs. Sigma 6/9	103/001-15
DEC System/10 General Weaknesses Vs. Sigma 6/9	103/001-15
DEC System/10 Specific Weaknesses Vs. Sigma 6/9	103/001-15
Sigma 6/9 General Strengths Vs. DEC System/10	103/001-15
Sigma 6/9 Specific Strengths Vs. DEC System/10	103/001-15
Sigma 6/9 Strategy Vs. DEC System/10	103/001-16
Multi-Use Strategy	103/001-16
Time-Sharing Strategy	103/001-16
Batch Strategy	103/001-16

SIGMA 6/9 SALES GUIDE
TABLE OF CONTENTS (Continued)

	Page
Real-Time Strategy	103/001-16
Univac 1106	103/001-17
Univac Sales Strategy for the 1106	103/001-17
Univac 1106 General Strengths Vs. Sigma 6/9	103/001-17
Univac 1106 Specific Strengths Vs. Sigma 6/9	103/001-17
Univac 1106 General Weaknesses Vs. Sigma 6/9	103/001-17
Univac 1106 Specific Weaknesses Vs. Sigma 6/9	103/001-17
Sigma 6/9 General Strengths Vs. Univac 1106	103/001-17
General Xerox Data Systems Strategy Vs. Univac 1106	103/001-17
Specific Xerox Data Systems Strategy Vs. Univac 1106	103/001-17
SECTION II – SALES PROMOTION	
Overview	103/001-19
Brochures - Standard Products	103/001-19
Brochures - Computer Systems	103/001-19
Reference Manuals	103/001-19
Hardware	103/001-19
Operating Systems	103/001-19
Language Processors	103/001-19
Applications/Utility Packages	103/001-20

LIST OF TABLES

Table		Page
1	Sigma 6/9 Evaluation Factors	103/001-7
2	Sigma 6/9 Features	103/001-12

ACCOUNT BRIEFS

	Page
Health Care Account Brief	HC-1
Manufacturing Account Brief	Mfg-1
Education Account Brief	Ed-1
DOD Account Brief	DOD-1

SECTION I

SIGMA 6/9 – THE PRODUCTS AND THEIR MARKETPLACE

SIGMA 6/9 SALES GUIDE

INTRODUCTION

OVERVIEW

The purpose of the Sigma 6/9 Sales Guide is to assist the field in better understanding the products and their marketplace. This is accomplished by the following means:

- Reviewing the product history
- Analyzing the installed base
- Determining customer qualifying factors
- Suggesting sales strategy
- Examining the competition
- Discussing future market direction

This document will address itself primarily to the Sigma 6/9 marketplace. It will examine the successes that have been achieved up to the present. It will also explore the market penetrations we have achieved in various application areas and why those successes were reached. It will look at the future emphasis on Sigma 6/9 in view of the history we have observed to date, as well as the significant changes that are taking place in our marketplace. In summary, this document will offer suggestions and guidelines which may be used to maximize your chance of success.

SIGMA 6/7/9

The Sigma 7 computer was announced in April 1966 and presently there are approximately 100 systems installed. This machine was the beginning of the Sigma family and offered the industry a new concept — "multi-use". This concept was built into the hardware and was reemphasized in the software design.

The Sigma 6 computer system was Xerox Data System's initial entry into the commercial business data processing community. This system was announced in May 1970. Performance improvements were incorporated in 1971 which made the Sigma 6 superior in price and performance to the Sigma 7, thereby removing the Sigma 7 system from serious consideration except in upgrade and/or OEM situations. To date, approximately 100 Sigma 6/7 installations are operating and the new software packages available to mapped machines make our 1972 sales forecast high.

The Sigma 9 was announced in October 1970 and the first customer delivery was made in November 1971. We presently have over ten firm orders, most of which will be delivered in the first quarter of 1972.

The Sigma 6/9 systems provide a general-purpose capability which can compete favorably in almost any single environment. That is, batch, time-sharing, and real-time processing. By selecting the proper monitor system, the system can be optimized to suit the specific requirements.

This sales guide will outline the areas where advantages and benefits of the above mentioned products may be used with greatest impact. Also, this guide is intended to be a "living" document, which will be continuously updated and new information will be added as the marketplace changes.

SUMMARY OF INSTALLATIONS

Sigma 6/7

Approximately 100 Sigma 6/7 systems are presently installed. This installed base is examined from the following viewpoints:

- List of users by industry
- Standard versus value-added (Systems or OEM) systems

All categories are further examined by comparing the breakdown of pre-1971 installations to 1971 bookings.

A selected listing of Sigma 6/7 installations by industry (Education, Health Care, Manufacturing, Service Bureaus, Department of Defense, Civil Agencies, Petrochemical, and Aerospace) is provided. This listing is abridged and does not encompass all of the Sigma 6/7's installed.

Education

University of Tulsa
University of Vermont
Michigan State University
University of California at L.A.
University of California at Irvine
University of California at Berkeley
University of Texas, Arlington
University of Toronto
Bucknell University
Carleton University
Montana State University
Queens College
University of Nevada
University of Wyoming
Vanderbilt University
Johns Hopkins University
Tennessee Technological University
American Council of Education
Rochester Institute of Technology

Health Care

Meharry Medical College
Science Dynamics
Electro Optical Systems
Riverside Research
Wadley Hospital
University of Alabama

Manufacturing

Airco Speer, Inc. (Air Reduction Corporation)
AC Electronics
Chicago Bridge & Iron
Computing Devices
Newport News Shipbuilding
Naval Training Devices Center
Rochester Products Division (GM Corporation)

Service Bureaus (Including In-House Service Bureaus)

Commercial Information Service
BMA Data Processing
Bonner & Moore
Comshare
Comshare-Canada
Data Logics
McDonnell Automation (2)
Diecomp

Department of Defense

Patrick AFB (3)
DREV - Canada
Ft. Meade - Maryland
U.S. Navy - Bermuda
Security Agency (2)

Civil Agencies

Argonne National Labs
NASA - Moffett
Woods Hole Oceanographic Institute
Brookhaven Labs - Upton (2)
Commercial Research Center - Canada
DREP - Canada
NASA - Ames

Petrochemical

Century Geophysical
DSC/Magnatape
Universal Oil
SRC - Globe
CONOCO

Aerospace

Lockheed - Sunnyvale
LTV
McDonnell Douglas (2)
Autonetics
Computer Science
Comcor - Shell
Comcor - Anaheim

In the interest of completeness, it should be pointed out that approximately ten Sigma 6/7 computers are being installed in Xerox facilities. These installations are not included in the analysis.

MARKET PENETRATION ACHIEVEMENTS TO DATE

Sigma 6/7

The breakdown of total installed Sigma 6/7 systems by industry follows:

Education	28%
Health Care	9%
Manufacturing	10%
Service Bureaus	13%
Department of Defense (DOD)	11%
Civil Agencies	11%
Petrochemical	7%
Aerospace	10%

The percentage breakdown by industry for Sigma 6 orders received in 1971 follows:

Education	50%
Health Care	0
Manufacturing	25%
Service Bureaus	25%
DOD	0%
Civil Agencies	0%
Petrochemical	0%
Aerospace	0%

A breakdown of the systems installed which used standard Sigma 6/7's (end user) or which required some degree of involvement with our Computer Systems Division and/or OEM's follows:

Value Added/Standard	Sigma 6/7 Inst. Total in %
End User (Standard)	47
Computer Systems Division, OEM, and Commercial Systems	53

The same analysis was performed on all Sigma 6/7 orders received during 1971; the results follow.

Value Added/Standard	Sigma 6/7 Inst. Total in %
End User (Standard)	75
Computer Systems Division, OEM, and Commercial Systems	25

Sigma 9

Nine Sigma 9 CPU orders have been received to date; they are:

Carleton University (2)
Miami Heart Institute (2)
Patuxent River Naval Base
Memphis State University
Newport News Shipbuilding
Comshare - U.K.
Cybernetics Research Corporation - U.K.

The industry breakdown follows:

Education	33%
Health Care	22%
Manufacturing	11%
Service Bureaus	22%
DOD	11%
Civil Agencies	0%
Petrochemical	0%
Aerospace	0%

Summary and Conclusion

From the above analysis of the Sigma 6/7/9 installation base, the following conclusions may be drawn:

- Traditionally, the education and service bureau industries account for approximately 40 percent of the Sigma 6/7 installations. In 1971 the education industry alone accounted for 50 percent of the Sigma 6 sales and service bureaus and manufacturing accounted for another 50 percent.
- Traditionally, approximately 50 percent of Sigma 6/7 business is directly to end users. In 1971 end user sales amounted to 75 percent of the total Sigma 6 business.
- The Sigma 9 is attractive to a large industry segment, but education users account for the largest number of CPU's.
- Not enough information is available on Sigma 9 sales by industry to reach any firm market penetration decisions at this time.

The general conclusion reached is that the Sigma 6/7/9 market is presently heavily associated with education and end user customers, and the service bureau sector and federal government is no longer as heavy a contributor as it was previously.

PROJECTED MARKET DIRECTION SUMMARY

Overview

The market for the Sigma 6 and Sigma 9 can be broken down into the following Xerox Data Systems target markets:

- Education
- Health Care
- Manufacturing
- Federal Government (defense-related)
- Government (civil agencies and local government)

The estimated weighting of the penetration of both Sigma 6 and Sigma 9 in these target markets in 1972 is summarized below:

	Sigma 6	Sigma 9
Education	51%	43%
Manufacturing (including Aerospace)	17%	18%
Health Care	5%	3%
Federal Government (defense-related)	9%	18%
Government (civil agencies and local government)	9%	18%
Service Bureaus (including in-house time-sharing)	9%	0%

These 1972 projected percentages are an estimate for Sigma 6/9 sales within the United States. Naturally, no salesman's individual territory will coincide exactly with the activity shown above, but this guide is supplied with the intent to help salesmen qualify industries. Of course, the final results for 1972 will be a result of the efforts of the field sales force.

The market segmentation shown above is based upon the characteristics of the target markets as well as the strengths of the Sigma 6 and Sigma 9 in meeting the requirements of these markets.

Some assumptions describing the characteristics surrounding the target markets and the possible sales channels (e.g., end user, OEM, Systems Integrator, Commercial Systems) which may be used are summarized below.

Education

This total market encompasses elementary and secondary schools, junior colleges, technical schools, universities, libraries, educational services, and scientific research organizations. The portion of this market highly suitable for Sigma 6/9 products is the college and university segment.

The Sigma 6/9 has been especially competitive in the college and university area when the following customer qualifying factors have been met:

1) University Size: Medium - student enrollment from 2500 to 10,000
2) Computer Hardware Budget: From $6,000 to $25,000 per month
3) Installed Computer: IBM 360/40 most common, but anywhere from IBM 360/30 to 360/50
4) Application: General-purpose academic or joint computer center

Approximately 500 universities within the United States meet the requirements listed above. Therefore, the market is large and the Sigma 6/9 is extremely competitive in most of these opportunities.

The sales story associated with Tennessee Technological University presents a typical joint-computer-center situation where a Sigma 6 system removed an IBM 360/40 under strong competition from an IBM 370/145.

Although the majority of university business will be done directly with end users, the Commercial Systems Division can be useful in any possible conversion effort and/or any consultant study which will help close the business.

Manufacturing

In the manufacturing marketplace, Sigma 6 and Sigma 9 systems fit well in two general application areas:

- High technology manufacturing
- Process manufacturing

The key characteristics of the high technology manufacturing industry are:

- Intense engineering product definition
- High dollar volume sales
- Large number of employees
- Requirement for manufacturing control systems applications

This market knows Xerox Data Systems and has potential requirements for Sigma 6/9 products. Typical examples are: General Motors, Air Products, Cummins Engine, and Newport News Shipbuilding.

The manufacturing process consists of producing a relatively small number of products by each continuous process. The process manufacturing segment is further divided into two subsectors:

- Petrochemical: Characterized by high capital investment and wide-spread use of computers
- Other Process Manufacturing: Encompassess all other aspects of the manufacturing process industry

Sigma 6's and Sigma 9's will be marketed to end users such as General Motors, Cummins Engine, and Air Reduction Corporation. The Commercial Systems Division will be essential in closing business in production control application areas.

Health Care

The health care marketplace encompasses research laboratories in medical colleges and pharmaceutical firms, hospitals, medical service bureaus, state and local health departments, medical research foundations, and federal agencies (NIH, Health Services and Mental Health Administration, Social Security, etc.).

In 1972 the marketplace for Sigma 6 and Sigma 9 systems will be in those areas which require administration, scientific, and/or real-time capabilities such as:

- University hospitals/research laboratories
- Multiphasic screening facilities
- Medical service bureaus

Sigma 6/9 will be marketed directly to medical colleges, medical service bureaus, and larger hospitals for multi-use, including administrative tasks using Data Management System (DMS) and remote-inquiry capabilities. It is estimate that the majority of these sales will involve the support of the Computer Systems Division and/or the Commercial Systems group. Minimal involvement of OEM's is expected.

Federal Government (Defense-Related)

This market includes all DOD agencies, the U.S. Army, U.S. Air Force, and U.S. Navy, and all security agencies associated with DOD.

The DOD is associated with the procurement of approximately 70 percent of the total computers procured by the U.S. Government. Despite the leveling off of DOD budgets in the next five years, the DOD will continue to be the greatest user of systems in the world, and offers a good, stable market.

The following industry trends are expected to continue:

- IBM penetration will continue at approximately 25 percent of total
- Trend to purchase rather than lease will continue
- Procurement cycle will remain long - 18 to 30 months
- Control selection agencies will become the major factor in procurement; therefore, multi-regional coordination will be essential to success

Sigma 6/9 Opportunities

The marketplace includes batch and real-time applications. Many real-time opportunities require the running of applications programs in order to process real-time data. The Computer Systems Division can be extremely helpful in these complex application areas. Typical examples are:

- PAX River flight simulation system
- Navy Security Agency STIK project

The Sigma 6/9 will be marketed directly to end users and also through OEM's and Systems Integrators.

Government (Civil Agencies and Local Government)

This market covers all civil federal agencies (11 departments and 60 agencies, boards, and commissions), state and local governments, and directly associated contractors such as Jet Propulsion Laboratory and Brookhaven National Laboratory.

In the 1971 U.S. budget, America's priorities were reordered and, for the first time in 20 years, the money spent for human resources was greater than that spent for defense. This increased emphasis and the need for the U.S. Government to become more efficient will press the civil agencies to an accelerated rate of computer usage. At the same time, the decentralization of the civil agencies, involving the formation of ten federal regions and the concept of revenue sharing with the states, will subsidize the state and local governments.

Sigma 6/9 Opportunities

Sigma 6/9 systems will be sold to civil agencies and local government for administrative data processing applications using the Xerox Operating System (XOS), DMS, and ANS COBOL. The Commercial Systems Division will be helpful in effecting most of this business. Typical users will be the Environmental Protection Agency (EPA), Department of Commerce (DOC), Department of Interior (DOI), and Department of Agriculture (DOA).

Also, the Sigma 9 will be used in new general scientific research and development and data processing requirements. Existing Xerox Data Systems customers will upgrade to Sigma 9.

Service Bureaus (Including In-House Time-Sharing)

The service bureau market consists of computer utilities, in-house service bureaus, and the special telephone company account.

Although the computer utility and service bureau business has been weak in the last few years, this category of opportunity still represents an extremely competitive situation for Xerox Data Systems. Due to severe funding problems, we anticipate little growth in the utility and service bureau industry, with the exception of in-house time-sharing opportunities in larger companies. The telephone companies are an excellent example of a major account area where Sigma 6's will be marketed directly to AT&T and GTE (General Telephone and Electronics) for use as in-house time-sharing systems. Please reference the In-House Time-Sharing Sales Guide for further details.

Reputable service bureaus with a good credit reference will continue to be viable prospects for Sigma 6/9 systems. A typical example is McDonnell Automation.

SIGMA 6/9 MARKETS

SPECIFIC ORDERS/INSTALLATIONS

Purpose

The purpose of this section is to provide you with examples of how our customers are successfully using Sigma 6's and Sigma 9's in Xerox Data Systems target markets and applications areas. A description of the application, the system configuration, and the name of the district servicing the account are provided.

Success stories are provided for each of the following target markets and applications:

- Health Care
- Manufacturing
- Education
- DOD
- Civil Agencies

Health Care

The success of the Sigma 6/9 in the health care market is largely due to our multi-use capability. Our Sigma 6/9 health care installations will supply the following information:

- The installations are primarily research-oriented, using our scientific capabilities
- Over 50 percent of the installations are in educational institutions
- The majority of health care software has been developed by the user

Our experience at Miami Heart Institute in Miami, Florida is a living testimonial to our strong competitive position when multi-use is a requirement. The success story on Miami Heart is supplied later as an account brief. This story reveals all of the pertinent data associated with the sale of dual Sigma 9 computers to a small, research-oriented

hospital. The application was to produce a comprehensive hospital information system which includes monitoring of patients in intensive care, monitoring the clinical laboratory, integrating this data into a common database, and finally to add administrative data (patient billing, nurse scheduling, payroll, etc.) to the database.

Manufacturing

Our success in the manufacturing area with Sigma 6/9 systems has been heavily associated with our ability to convince the customer that we understand his application and then sell a solution. The Commercial Systems Division has been instrumental in providing support in this area.

A typical success story is the Rochester Products Division of General Motors Corporation in Rochester, New York. This Sigma 6 was sold on a production control application. The complete account brief is supplied at the end of this section.

Education

The success of the Sigma 6/9 systems in the university market is due in large part to its high price/performance ratio.

The majority of the Sigma 6/9 computers installed in universities are providing general purpose computing and some type of terminal capability (time-sharing or remote batch).

The education success story chosen is Tennessee Technological University's Sigma 6 installation. This system is a typical joint-computer-center operation, where the single computer provides all of the data processing requirements for the university. That is, the Sigma 6 system is used to handle all of the administrative, research, and instructional computer requirements of the university.

This account brief may be found at the end of this section.

U.S. Department of Defense

Our capabilities are well known to the computer-oriented groups of the DOD. Our Systems Division has provided the U.S. Government with many special-purpose systems. Therefore, our credibility in providing solutions to problems is already established.

A typical success story is the recent Patuxent River Naval Base, Maryland award. The "PAX River" application is a general-purpose, real-time flight test system. This Sigma 9 system beat all of the competitors. This account brief follows later in this section.

Civil Agencies

As the list of installations shows, our successes in the civil agencies marketplace have been heaviest in AEC and NASA.

An excellent example of the new type of successful Sigma 6 installations in civil agencies is the Communications Research Center (CRC) installation. CRC in Canada has a Sigma 7 installed and is doing scientific and administrative batch plus a heavy in-house time-sharing commitment.. Time-sharing was an important criterion for purchase and this Sigma 7 out-performed all other competitors.

This account brief is provided in the In-House Time-Sharing Sales Guide.

PRODUCT BENEFITS IN RELATION TO SPECIFIC MARKETPLACES

Overview

This material is designed to present a summary of the evaluation factors which will be considered in the typical applications referenced in the general market segment chosen. That is, a prioritized listing of the evaluation factors is supplied for each industry.

It is an impossible task to try to summarize this data and make it accurate for each unique situation. Therefore, we have taken a general case and have chosen only primary and secondary factors. An explanation of these choices is also supplied.

It is important to note that this exercise is supplied as a general guide which will allow the salesman to prioritize the requirement (and therefore the solutions) associated with his individual sales situation.

The Sigma 6/9 evaluation factor chart (Table 1) is presented to summarize the types of evaluation factors which will allow Xerox Data Systems to be a winner. You should attempt to organize the general selection priorities to agree with our strengths in that market.

Naturally, some applications will not permit the above arrangement of priorities. This does not necessarily mean that we are not competitive, but it should raise a question as to the extent of our resources that will be expended on that opportunity. This judgement is a district sales manager's decision.

A discussion of the above priority selection follows.

Education

Batch Throughput Performance

Typically, the benchmark results are the single performance factor evaluated. To enhance our position you should

TABLE 1. SIGMA 6/9 EVALUATION FACTORS

EVALUATION FACTORS	TARGET MARKETS					
	Education	Health Care	Manufacturing	Service Bureaus*	DOD	Civil Agencies
Batch Throughput Performance	P				S	
Terminal Capability	S	S		P		
Remote Batch Capability	S			S		
Price/Performance Ratio	P	S	S	P	P	P
Real-Time Capability		P	S		P	S
Compatibility	S		S	S		
System Approach		P	P		P	P

* Including in-house time-sharing. LEGEND: P = Primary Factor; S = Secondary Factor

attempt to weight it heavily with scientific processing and also try to insert some time-sharing simulation.

Terminal Capability

Although we would like this to be a primary consideration, experience has taught us that in most evaluations it is secondary. You should demonstrate this capability and try to make it a higher factor in the evaluation demo for the administrative as well as the scientific users on campus.

Remote Batch Capability

Another of our strengths which is traditionally not given the emphasis it deserves in the evaluation cycle. This can be sold heavily via concepts presentations. Sell the total cost of the terminal (some vendors must dedicate core to a remote batch terminal).

Price/Performance Ratio

Xerox Data Systems wins big when bang-for-the-buck is evaluated. And, universities usually have to provide a service within a given budget allocation. Also, most states have a requirement for competitive bidding; therefore, low price is an important consideration.

Real-Time Capability

Although we would like to have this as an important factor, most university computing center applications do not have this requirement. You can try to come up with a real-time requirement or sell it as a future requirement. This is important when a purchase is considered.

Compatibility

Although we will be replacing an existing computer, university people traditionally do not put a lot of weight on conversion if they have most of their work in FORTRAN and/or COBOL. If conversion is a major problem, it will have to be faced. But, in most of the university opportunities where we have been successful in the past conversion has not been a primary or secondary evaluation factor. This factor should be considered in qualifying the opprotunity. You have a solution to the conversion problem via Commercial Systems (please reference the Conversion Sales Guide for further information).

Systems Approach

Most universities have high-caliber, low-cost student workers who can be assigned to application or conversion work. Therefore, they are usually not willing to pay for systems development activities. For more information on conversion assistance, refer to the Conversion Sales Guide.

Health Care

Batch Throughput Performance

Since this factor is used within the industry to measure performance, it will be discussed. But, in the application areas targeted by Xerox Data Systems, it will usually receive less emphasis in the final analysis.

Terminal Capability

The ability to retrieve data from a database is important in most hospitals. Whether this information is associated with patient monitoring, scheduling, or patient checkout, in the long run in a hospital it is usually important. Even laboratory automation requires some sort of communications capability.

Remote Batch Capability

Although remote batch is a strong capability, in our traditional applications in health care it is not considered a requirement.

Price/Performance Ratio

Getting the job done within the budget is usually a requirement, but getting the job done correctly and efficiently usually comes first. Also, having the confidence in the vendor that the job will get done is also of prime importance.

Real-Time Capability

When real-time is important it usually is of primary importance or it is of little consequence. In our traditional health care opportunities it is of prime importance.

Compatibility

Since the application is usually new, then compatibility with an installed machine is not of prime importance. Usually, compatibility with other installed systems is considered, but is not usually a prime consideration.

Systems Approach

Most of our traditional health care installations are unique. Therefore, the systems approach to total solution and/or handling special requirements is of primary importance. When this can become a high-level requirement, we win big.

Manufacturing

Batch Throughput Performance

Usually the customer cannot come up with a meaningful benchmark; therefore, batch performance is not determined accurately. He usually finds other means of determining performance, but this traditionally does not solve his problem. He is more interested in his problem's solution than the machine performance.

Terminal and Remote Batch Terminal Capability

Again, if terminals are required, it is part of the solution. But a typical manufacturer usually does not want terminals for on-line programming (unless it is for an in-house time-sharing application), so generally terminals are not, in themselves, an important evaluation factor.

Price/Performance Ratio

Since we are dealing with major accounts, a degree of competitive evaluation will be required prior to contract award. But if the job is worth doing, it's worth doing right and we will tailor the solution to the requirement. This should cost more than a generalized solution which can or cannot be made to adapt to the situation.

Real-Time Capability

This is entirely dependent on the application, but in most manufacturing applications a fast response to a stimuli is not required, although we may sell our strength from an efficiency standpoint.

Compatibility

Most major accounts demand some degree of compatibility within the organization. These requirements are usually general and easy to meet unless conversion from an existing system is required. Then our systems capability becomes important.

Systems Approach

In most manufacturing successes to date, the systems approach is what was responsible. When other vendors were trying to fit the customer's requirements to a generalized solution, we were able to have experts examine the problem and then propose a tailored solution. This approach has proven to be successful.

The trend of selection has been established; therefore, to continue would only be redundant. This exercise was meant as a guide which each salesman can use to qualify new accounts and compare the evaluation criteria against past successes.

SUGGESTED SALES STRATEGY

Overview

For each of the target market areas outlined in the introduction to this sales guide, suggested sales strategies are

provided in the following paragraphs. These suggestions are only designed to be used as a guideline in territory management and account penetration in a given market area.

A general philosophy is that we do best when we can exploit the strengths of the Sigma 6 and Sigma 9 systems and our support capabilities. The outlined sales strategy attempts to accomplish this end.

Health Care

The basis for our sales strategy for Sigma 6/9 opportunities in health care is to capitalize on our strengths:

- Try to qualify your opportunities which have primary applications that fall within our strong applications areas such as scientific and real-time
- Reference-sell on show-case installations such as Miami Heart Institute and Long Beach Community College
- Capitalize on existing software such as Laboratory Operating System (LOS), DMS, ECG analysis, and spirometry

This strategy includes emphasizing our traditional scientific/real-time capabilities and placing a secondary reliance on administration or bookkeeping functions. At present, we don't have a hospital administrative system such as IBM's Shared Hospital Accounting System (SHAS), but we do have demonstrable and referrable real-time/scientific and administrative accounts. And, we have the capability of expanding into the hospital administrative functions from a system whose primary application is associated with our traditional strength (refer to the Miami Heart Institute success story herein).

Manufacturing

The sales strategy in selling Sigma 6 and Sigma 9 systems to manufacturing firms is based on the following:

- Concentrate on major accounts
- Target certain dedicated applications such as in-house time-sharing
- Pursue real-time and scientific-dependent opportunities such as:
  - Quality Control & Test
  - Research Laboratories
  - Production Control

The Commercial Systems group can be a very valuable ally in the sales effort. They understand this market and its requirements; therefore, they can be of significant help. The conversion problem must also be "scoped" accurately in order to qualify the account properly. Be sure to face this obstacle early.

Examples of where we have succeeded in penetrating major manufacturing accounts with Sigma 6/9 include: General Motors, Air Reduction Corporation, Newport News Shipbuilding. These successes were obtained by understanding the customer's problem and providing a solution. Product Management is certain that the Commercial Systems group was instrumental in achieving the objective.

Education

As was presented earlier, the medium-sized schools represent our traditional customer base. Within this base, computers fall into four application categories:

- Academic — computer shared by several departments
- Administrative — computer used by business departments
- Joint Academic and Administrative
- Dedicated — used by one department or for one application

A large number of state governments are dictating that the academic and administrative users will co-exist on one machine. At present, the joint academic and administrative center accounts for 53 percent of all sales in the above categories. This trend is expected to continue, thereby giving us the opportunity to replace two installed systems (an IBM 360/40 and an IBM 1401 for example), with one.

Our multi-use capability comes on strong in this area. This total capability includes:

- Close administrative and scientific compatibility (in FORTRAN and COBOL)
- Administrative batch
- Scientific batch
- Remote batch
- Scientific time-sharing
- Administrative terminal entry

All this is offered at a price/performance ratio which is unmatched in the industry. Our many reference installations will establish our credibility in this market. The IBM 370/145 and Univac 1106 are usually competitors in this type of opportunity.

The stand-alone academic installation is usually easiest for us to sell. This is due to our appeal within the academic community. Most knowledgeable computer users have grown to respect Sigma and our large number of supported software packages.

The chief competitors in these types of applications are traditionally DEC PDP-10, Univac 1106, and the IBM 370/145.

Although the trend is toward centralization of computer resources, there are still some systems being ordered for relatively dedicated applications in the scientific and engineering areas.

These areas include:

- High and low energy physics research
- Computer science departments
- Laboratory automation

When funding is available, these application areas can be extremely beneficial for Xerox Data Systems.

In summary, the attack strategy is to:

- Sell a total solution to the medium-sized university segment
- Reference specific installations
- Capitalize on our large Users' Group library
- Stress our price/performance advantage

U.S. Department of Defense

The suggested strategy for selling Sigma 6/9 to DOD prospects comprises four major points:

- Concentrate on specialized real-time systems directly to DOD and aerospace prime contractors
- Capitalize on our established reputation in presently installed applications and technologies such as:
  .. Flight test & telemetry
  .. General-purpose real-time, scientific batch, and time-sharing in R&D laboratories
- Offer turnkey customer solutions through the Computer Systems Division or Commercial Systems
- Use OEM's and Systems Integrators where applications demand and where a high percentage of non-standard hardware and software is required

In formulating an appropriate Sigma 6/9 sales strategy, it should be recognized that sales coverage at the appropriate DOD selection agencies may be required to complement the sales effort conducted on the end user. There has been more than one sale lost when the end user decided to go with Xerox Data Systems and this decision was reversed at a DOD selection office. These offices are:

- USAF - "MCS" Hanscom Field, Massachusetts
- U.S. Navy - "ADPESCO" Arlington, Virginia
- U.S. Army - "CSSEC" Arlington, Virginia

The procurement of computer systems by DOD can take three major forms:

- Competitive selection by selection offices — the majority of contracts are purchase, except for large systems which are GSA lease
- RFQ or RFP — negotiated procurements by "local" end user prospects or by aerospace prime contractors such as Hughes, North American, Grumman, etc.
- Sole-source procurements — normally only in classified programs (e.g., U.S. Army Security Agency), or in certain cases by prime contractors

Past history has shown that sales to DOD prospects can depend to a large degree on "specmanship", and sales strategies for selling Sigma 6/9 to DOD users have a higher probability of success if the end user or selection office identifies unique Sigma 6/9 characteristics in an RFP or RFQ.

Sigma 6 and Sigma 9 sales potential in the DOD marketplace is provided by:

- OEM and Systems Integrator customers which, in turn, act as prime contractors to DOD
- Direct sales to DOD users, making use of the "turnkey" capability, expertise, and products provided by the Computer Systems Division

Civil Agencies

The overall suggested sales strategy for Sigma 6/9 is to expand upon the successes of Sigma 6 and pioneer in newer, expanding civil agency areas which can make use of the multi-use capability of Sigma 6/9.

Procurements within the civil agencies are rather complex and sales strategies should be designed accordingly. In general, the approval authority on a given computer procurement is a function of its dollar value. Each civil agency has assigned an upper limit as to what each level of management can approve. For example, in NASA:

Management Level	Upper Limit
Division Directors	$100K
Center Directors:	
GSFC, MSC, MSFC	$2.5M
KSFA, Wallops, FRC	$1.25M
NASA Headquarters:	
Associate NASA Administrator	$5M - $10M
NASA Administrator	Above $10M

The potential buyers for Sigma 6 and Sigma 9 fall into four general categories:

- End Users — all government agencies (e.g., NASA, FAA, AEC)
- OEM's — including TRW, Philco-Ford
- Systems Integrators — such as GE, Bendix, Radiation
- Prime Contractors — such as North American and which could include OEM's and Systems Integrators

In shaping the sales strategy for a Sigma 6 or Sigma 9 opportunity, the types of procurements used by the civil

agencies may provide a useful guide:

- Competitive selection evaluated by a selection board – Proposal effort and benchmarks play a key part in selection. In some cases, a cost-effective formula is used by the procuring agency to evaluate the use of equipment over a five-year period.
- RFP or RFQ – Negotiated procurements by "local" procuring activities, or by prime contractors.
- Sole Procurements – Currently limited to very few opportunities per year.
- GSA Contract – For add-ons, maintenance, and for procurement on one CPU at a time.

Because heavy emphasis is placed on study contracts to produce systems definition and specification, "specmanship" is as important in formulating sales strategy for civil agencies as it is in the DOD procurements mentioned in the preceding paragraphs. A vendor is one step ahead of the game if he can begin working with a given civil agency in the initial phases of a program. To translate this in sales strategy terms, if the situation dictates a direct sale to the end user agency, get the necessary resources in the initial program stages (e.g., Computer Systems Division). Proper servicing of prime contractors/OEM's/Systems Integrators may help them gain an initial advantage on a given program.

The overall attack strategy suggested for selling Sigma 6 and Sigma 9 to civil agencies encompasses:

- Concentrate on specialized real-time and scientific systems for NASA and AEC
- Pursue real-time and scientific opportunities in new agencies:
  - EPA: Emission testing, pollution monitoring
  - NOAA: Data acquisition for research
  - GSA, IRS, SS, LEAA: Communications
  - DOT: Traffic and transportation control
- Capitalize on established reputation in specific applications and technologies
- Use OEM's and Systems Integrators where Xerox Data Systems lacks expertise.

In summary, both Sigma 6 and Sigma 9 will be marketed directly to the targeted civil agencies or indirectly through prime contractors/OEM's/Systems Integrators. The sales strategies used in pursuing a given opportunity should be based upon Sigma 6/9 strengths in real-time and scientific areas. Coordinated selling in several areas is necessary and our Computer Systems Division or OEM-type customers should be used as dictated by the requirements of the opportunity.

SIGMA 6/9 TECHNICAL CHARACTERISTICS

PURPOSE

The purpose of this material is to provide technical information about Sigma 6 and Sigma 9 which is not readily discernable from the Sales Manual and Sigma 6 and Sigma 9 Reference Manuals.

SIGMA 6/9 COMPARISON

To easily characterize the various standard features of Sigma 6 and Sigma 9, a feature/system comparison is presented in Table 2. This table provides a capsule summary of the features of these two systems. More extensive information is presented in the Sales Manual and Sigma 6/9 Reference Manuals.

PRODUCT PERFORMANCE SUMMARY

Philosophy

One of the more difficult parameters of a computer system to define is performance characteristics. What one can extrapolate from a specific instruction mix, such as a Gibson mix, may disagree to a large extent from real-world performance (e.g., customer benchmarks). Many factors come into play such as monitor overhead, file structure, language processor efficiency, and the amount of context switching which occurs during a given set of programs. Since the Sigma 6 and Sigma 9 are designed for the classic commercial multiprogramming applications, the multi-use characteristics of these systems (real-time; batch, with or without symbionts; and/or time-sharing) further cloud the issue of performance measuring. What can be done, however, is to ascertain the general performance relationship between the Sigma 6 and Sigma 9 by looking at instruction mix figures. Such figures reflect the potential computing power of the processor and do not attempt to consider the above mentioned factors. Although instruction mix figures cannot be directly applied as a measure of throughput performance, they can serve to compare the potential processing capabilities of the Sigma 6 and Sigma 9.

Instruction Mix Comparison

There are several types of weighted instruction performance comparisons. The most popular one seems to be the Gibson mix, named after Tom Gibson of Bell Labs who was trying to decide on the best system for his particular applications. The Gibson mix is used here for an evaluation of the Sigma systems to do a typical scientific job. The Gibson mix is

TABLE 2. SIGMA 6/9 FEATURES

FEATURE	SIGMA 6	SIGMA 9
Central Processor –		
Watchdog Timer	Yes - single phase	Yes - two-phase
Real-Time Clocks	Yes - 2 std., 2 opt. - line frequency plus 500Hz, 2000Hz, or 8000Hz available	Yes - 2 std., 2 opt. - line frequency plus 500Hz and 2000Hz available
Memory Protect	Standard	Standard
Additional Register Block	Option - up to 16 total	Option - up to 4 total
Floating Point Hardware	Option	Standard
External Interrupts	Option - up to 224 levels	8-level std., option - up to 224 levels
External Interface (DIO)	Standard	Standard
Number of Instructions	106	112
Byte String Hardware	Standard	Standard
Alternate Processor Bus	No	Option
Maintenance Interface Bus	No	Standard
Programmable Clock Margins	No	Standard
Snapshot Register	No	Standard
Look-Ahead	No	Standard
Memory –		
Cycle Time	950ns	900ns
Number of Ports	1 std., up to 6 optional (or 8, FR)	2 std., up to 12 optional
Interleave	2- or 4-way	2- or 4-way
Variable Port Priority	No	Standard
Port Inhibit	Standard (locally at memory door)	Std (locally at memory door),remote opt
Memory Reconfiguration Panel	No	Standard
Load and Set Instruction	Standard	Standard
Snapshot Registers	No	Standard
Addressing Capability	128K words (512K bytes)	512K words (2048K bytes)
Indirect Addressing	One level	One level
Word Size	32 bits plus parity	32 bits plus parity
Expansion Increment	8K words up to 64K; then 16K incr.	16K words
Variable Starting Address/Memory Unit Ports	Standard	Option only (FR) - 2 different starting address per memory unit
Input/Output Processors –		
MIOP - External	Option - 8 channels expandable to 24 in groups of 8	Standard - 8 channels expandable to 24 in groups of 8
Bus Sharing Option	BSIOP - 8 channels (up to 24 opt.)	Channel 3 - 8 channels
Approximate Bandwidth	450KB (900KB w/4-byte option)	500KB (1000KB w/4-byte option)
Memory-to-Memory Move	No	Option
Alternate Processor Bus	No	Option
Maintenance Interface Bus	No	Standard
Snapshot Register	No	Standard
Internal I/O Processor	Option - 8 channels, expandable to 32 in groups of 8	No
SIOP	Option - 8 channels expandable to 32 in groups of 8	No
Maximum Transfer Rate	Up to 4MB/second	N/A
HSRIOP	No	Option - 4 channels
Maximum Transfer Rate	N/A	3.2MB/second (High Speed RAD Transfer)
Alternate Processor Bus	N/A	Option
Maintenance Interface Bus	N/A	Standard
Snapshot Register	N/A	Standard

not appropriate for evaluation of commercial programs; therefore, a commercially oriented mix was used to estimate commercial performance. With both mixes, the results are normally expressed in thousands of instructions executed per second. Since the purpose here is to show relative performance between the Sigma 6 and the Sigma 9, the Sigma 6 performance is used as a base of comparison (i.e., Sigma 6 performance is a base index of "1"). For example, if a particular set of instructions could be executed on the Sigma 6 in six minutes, and on the Sigma 9 in three minutes, the Sigma 9 index, relative to the Sigma 6, would be "2.0". In other words, the Sigma 9 gave two times the performance of the Sigma 6 in this example. The actual figures are as follows:

	Sigma 6	Sigma 9
Commercial	1.0	1.7
Scientific	1.0	1.6

These figures state that in instruction execution time the Sigma 9 will out-perform the Sigma 6 by slightly more than 50 percent in both commercial and scientific cases.

COMPETITIVE SUMMARY

OVERVIEW

For each competitor in each area an analysis is made for each of the following areas:

- Competitor sales strategy
- Competitor's general strengths
- Competitor's specific strengths
- Competitor's general weaknesses
- Competitor's specific weaknesses
- Xerox Data Systems Sigma strengths
- Xerox Data Systems general strategy

SIGMA 6/9 AND ITS COMPETITORS

The prime competitors for the Sigma 6/9 are identified as follows:

- IBM 370: Model 135, 145, 155
- DEC: DEC System/10 (PDP-10, Models 1040, 1050, 1055 (dual processor)
- Univac: 1106

The above list of competitors represent about 60 percent of the competition. Other competitors are by order of prominence:

- IBM: 360/40, 50, 65, 67
- HON: 6000 Series
- BUR: 3500, 5500
- CDC: 3300, 3500, 3600, 3800, CYBER 70

This identification of competition indicates that there is a broad spread of computers. This presents a difficulty in itself of assisting the sales force in being prepared. Also, a note to remember is that only 60 percent of the competition is covered by prime competitors. That leaves 40 percent by a variety of other competitors.

IBM 360/135/145/155

IBM 370 Models 135, 145, 155 General Sales Strategy*

- Stresses compatibility with IBM 360's
- Stresses long-term relationships with IBM
- Emphasizes service and support
- Discusses back-up available
- Places heavy emphasis on their knowledge of the prospect's industry and applications
- Stresses industry and application-oriented software
- Sells training (management and technical)
- Initially pushes upgrade (i.e., from IBM 360/50 to IBM 370/155). If competitive strength develops, drops back to a strategy of no-change or down-grade (i.e., IBM 360/50 to 370/145)

IBM's Specific Sales Strategy Vs. Xerox Data Systems

- Stresses Xerox Data Systems' scientific background, therefore inferring lack of commercial data processing capability. Therefore, Sigma is a special-purpose, not a general-purpose, machine
- Indicates Xerox Data Systems' software requires large amounts of core for the facilities provided
- Hints that Xerox is having second thoughts about merger with SDS
- Points out IBM installations in Xerox
- Calls attention to high Xerox Data Systems maintenance prices
- Stresses lack of PL-1 and multiprogramming
- Hints that hardware is unreliable

IBM 370 General Strengths Vs. Sigma 6/9

- IBM 360 compatible - plus emulation of DOS under OS
- New technology
- High-speed commercial processing
- Wide range of peripherals and communications equipment
- RAS - Reliability, availability, serviceability
- Range of application programs

---

* See the IBM 370 Competitive Report in the Competitive Information Reference Library for a more detailed discussion of IBM's competitive stature.

- Operating Systems
  - DOS/OS have been operational for several years
  - Facilities of OS
- Database processing where file sharing (multiple update) and communications are required
- Large local sales/service capability

IBM 370 Specific Strengths Vs. Sigma 6/9

- IBM 370/135 –
  - Commercial processing (multiprogramming and file management)
  - Low performance, low price entry system
  - Industry compatability
  - Application software
  - Complete peripheral line
- IBM 370/145 –
  - Commercial processing
  - Emulating DOS under OS
  - General-purpose processing via multiprogramming and file management
- IBM 370/155 –
  - Commercial processing
  - Scientific processing
  - General-purpose processing
  - Multiprogramming operating system

IBM 370 General Weaknesses Vs. Sigma 6/9

- Lack of efficient time-sharing software
- Poor real-time performance
- Generally higher priced
- Lack of systems capabilities

IBM 370 Specific Weaknesses Vs. Sigma 6/9

- Model 135 –
  - Main and control storage is volatile
  - Scientific processing power
  - Main memory limited to 240KB
  - Integrated I/O reduces processing power
  - Interrupt response time is slow
  - Delivery is greater than 18 months ARO
- Model 145 –
  - Main and control storage is volatile
  - Floating point is slow
  - Internal data flow is affected by the changing characteristics of the microprogram
  - User program storage can be lost to control storage
  - Instruction timings are based on next sequential instruction having been fetched 50 percent of the time; branches and non-full word instructions are ignored
  - User must "special order" additional microprogram mixes at an unspecified price
  - IFA requires channel positions 1 and 4 and cannot have the following: Word buffer features, channel-to-channel adapter, block multiplexing feature, two-channel switch, no dual-channel operation
  - Cycle-stealing I/O and related channel service request have fixed-priority arrangement
- Model 155 –
  - Price
  - I/O cycle steals
  - Memory is expandable only in 128KB increments
  - Efficient utilization of the system cannot be maintained in a development atmosphere due to operational problems (OS is optimized for production work)

Sigma 6/9 Strengths Vs. IBM 370

- UTS is an operational, multi-use system - available now
- Data-phase processing using DMS
- Scientific processing
- Real-time response through hardware external interrupts and multiple register blocks
- Systems capability
- High-speed, non-cycle-stealing I/O
- XOS offers a competitive commercial capability as well as strong scientific power

Sigma 6/9 General Strategy Vs. IBM 370

Stress the following items:

- Price/performance ratio
- Multi-use
- Unlimited use of equipment at no additional charge
- Flexible lease, installment purchase, and outright purchase plans
- Custom solutions (Computer Systems Division and Commercial Systems)
- Memory map for efficient memory management

DEC SYSTEM/10 (MODELS 1040, 1050, 1055)

DEC System/10 Strategy Against the Sigma 6/9

DEC prefers to sell to the following types of individuals:

- Knowledgeable engineer, researcher, or scientist
- Computer purists who like instruction set symmetry, etc.
- Software fiddler who is itching to expand and improve the limited but straightforward operating system

DEC will stress the following points in the time-sharing market:

- Dedicated time-sharing system
- Price/performance

- Large main memory - to 256K words
- Dual-processor support when necessary
- Proven time-sharing software (with demonstrations!)
- Third-generation time-sharing hardware (preceded by the PDP-1 and PDP-6)
- Wide range of language processors
  - FORTRAN IV compiler
  - MACRO-10 assembler
  - TECO text editor
  - AID - interpretive JOSS-like language
  - BASIC compiler
  - DDT assembly language debugger
- Multiple secondary storage units
  - DEC tapes - low-speed, low-cost magnetic tapes
  - Disk packs
  - Fixed-head swapping drums
  - Large capacity Bryand disk
- Low prices (especially peripherals)
- Communications hardware/software
- 36-bit word for longer precision

In the batch processing area DEC will stress the following points:

- Fast execution of FORTRAN jobs - the large instruction set requires fewer instructions to be generated for execution
- Multiprogramming - up to 14 jobs
- Commercial capability of TOPS-10 monitor
  - COBOL - reentrant version
  - SORT/MERGE
  - Remote batch

DEC will stress the following points about the TOPS-10 monitor:

- Commercial computing capability of the PDP-10. This is being done by providing TOPS-10 with the following:
  - COBOL - reentrant version
  - SORT/MERGE
  - Remote Batch
- Enhancement of the time-sharing capability. This has been done by increasing the number of user tasks from 63 to 127
- Projects to develop many items such as dual-processor support, DMS, MANAGE, etc.
- Demonstrate and benchmark the time-sharing and computational aspects of the PDP-10

DEC System/10 General Strengths Vs. Sigma 6/9

- Lower price
- Proven/operational time-sharing system
- Easy-to-use software
- Range of languages
- Multiprocessing (1055)

DEC System/10 Specific Strengths Vs. Sigma 6/9

- 36-bit word length for longer precision
- Maximum memory size of 256K words
- 366 instructions
- Dual relocation registers
- ASCII ability

DEC System/10 General Weaknesses Vs. Sigma 6/9

- Limited leasing policy
- Limited support capability
- Lack of compatibility within product line
- Not marketing or customer-oriented
- Avoids "systems" involvement
- Limited supported software
- Limited batch capability

DEC System/10 Specific Weaknesses Vs. Sigma 6/9

- Lack of multiprogramming batch
- 6-bit machine (compatibility and conversion problems)
- No double precision floating point
- Low-speed devices on direct I/O channel
- Limited external interrupts
- No program status word
- Although the operating system is quite solid, the processors (especially COBOL and FORTRAN) have problems. DEC's SIDR capability is from slow to non-existent
- Lack of commercial expertise and reference accounts
- Primitive file management

Sigma 6/9 General Strengths Vs. DEC System/10

- Batch capabilities
- Multi-use computers and operating systems can be tailored to meet different requirements
- Commercial computing capability
- System's capability:
  - Computer Systems Division offers message switching with CIOP
  - Commercial Systems offers conversion assistance
- Total Xerox capability
- Greater support commitment (both field and home office)
- Flexible lease, installment purchase, and outright purchase plans

Sigma 6/9 Specific Strengths Vs. DEC System/10

- System architecture with independent IOP's, byte string/decimal instructions, double precision, and the MAP

- Range of compatible computers - Sigma 5 - 9
- DMS and TAM (Telecommunications Access Method) with the several operating systems
- UTS with mapped memory management and performance monitoring and control
- XOS with multiprogramming, ANS COBOL, DMS, TAM and, most importantly, file management

Sigma 6/9 Strategy Vs. DEC System/10

The strategies presented are suggested for general use against the DEC PDP-10. The following items are fundamental and thus should be stressed at all times:

- Total Xerox capability
- Xerox Corporate commitment to information processing
- Xerox Data Systems strengths in special systems products (hardware and software - scientific and commercial)

Multi-Use Strategy

Convince the prospect to view his requirements as being best met by the multi-use concept if he doesn't already do so. As required, stress our commercial computing capability along with DMS, which is one of the highlights of our competitive strength against the DEC PDP-10.

Multi-use situations are itemized in the following paragraphs. The underlined items indicate the area of primary emphasis:

- Batch and Real-Time: Stress BPM first because of broad capability; stress RBM for scientific/FORTRAN shops
- Batch and Time-Sharing: Stress UTS
- Batch, Time-Sharing, and Real-Time: Stress UTS
- Commercial Batch: Stress XOS

Time-Sharing Strategy

Emphasize the technical excellence of the UTS design to the prospect's technical specialist. Highlight the following areas:

- Memory Management: User space is dynamically allocated by page (512 words). The map hardware feature allows the user's virtual memory to physically be located throughout the user space without regard to being contiguous. This allows two things:
  - Elimination of core shuffling with corresponding reduction of swapping overhead
  - More users to be in core at one time. More users in core enables more users to share reentrant processors and libraries. This further improves efficiency, user service, and response
- Multi-level queues provide consistent responses: The 28 status queues provide complete priority scheduling. The variety of events that drive the schedules represent all the intrinsic requirements to maintain consistent response for all terminals and, at the same time, obtain a high degree of overlap between I/O and computing.
- Performance measurement and control: This feature of UTS provides operations management with continuous use of statistics and environmental records for the orderly control of the system.
- There are 10 UTS installations and UTS is a proven product. The Xerox Display Station can be demonstrated in some district sales offices operating under UTS. UTS/Xerox Display Station customer presentations and demonstrations can be made in El Segundo.

Batch Strategy

- Scientific: Stress total job time (wall clock), FLAG and UTS multiprogramming
- Commercial: Pure commercial - DEC will avoid this area. We should stress that XOS is specifically for business data processing users and offers TAM and DMS. Also stress the decimal and byte-string hardware, proven COBOL, SORT/MERGE, and commercial systems capability.
- General-Purpose: Stress the following — XOS as a superior business data processing operating system, ANS COBOL, and DMS as the way of the future

Real-Time Strategy

Stress the following areas:

- Dedicated real-time system under RBM
- Concurrent batch
- Compiler generation of reentrant code and using reentrant libraries
- Involvement of the System Products group to solve particular problems with special hardware
- External interrupt capability. This will sometimes be countered by DEC selling the PDP-8 as a real-time front end and then doing heavy time-sharing on the PDP-10. Our counter-strategy here is to sell UTS with a CF-16 (Computer Systems product) front end
- Real-time applications usually have some other computer application associated with them such as the real-time data being associated with a database. We should strive to take the emphasis off the real-time area and place emphasis on information handling, database concepts, and the use of DMS for organizing and manipulating the database. In general, try to shift emphasis to multi-use

UNIVAC 1106

Univac Sales Strategy for the 1106

- The Univac 1106 is designed to extend the life and market of the Univac 1108
- They will stress the Univac 1106 in processing environments which emphasize heavy batch processing (particularly scientific batch)
- They will stress multiprogramming and remote batch under Exec 8
- They will emphasize the ease of growth to a Univac 1108 (this is a simple field modification)

Univac 1106 General Strengths Vs. Sigma 6/9

- Multiprogramming: Exec 8 is a powerful multiprogramming system of the same class as IBM's OS/MVT. It handles a variable number of batch and remote batch jobs. Operator scheduling is kept to a minimum
- Scientific Processing: The Univac 1106 is a powerful machine in a strictly scientific environment
- Random Access Devices: The wide range of mass storage devices available must be considered a plus for Univac. However, software support for the removable disk pack may not yet be demonstrable
- Application Packages: Univac has a wide range of scientific application packages available
- Disk Resident System: The Univac 1106 offers a minimum entry system which leases for about $20,000 a month. In educational environments this is further reduced to about $16K on a 7-year installment purchase

Univac 1106 Specific Strengths Vs. Sigma 6/9

- High-speed floating point
- Indexing time in basic instruction cycle
- Split-word arithmetic
- 128 high-speed registers
- Separate sets of registers for master and slave modes
- Core size to 256KW
- 36-bit words offer longer precision

Univac 1106 General Weaknesses Vs. Sigma 6/9

- The Univac 1106 represents a second-generation architecture. They are not industry-compatible (6-bit character rather than 8-bit byte)
- Time-sharing is strictly an add-on to both the hardware and software of the Univac 1106. Because of poor design, the CPU will be completely swamped by more than a few terminals (4 to 6). The reasons for this are the exceptional amount of operating system overhead and the cycle-stealing of the standard I/O channels. (The effects of the independent I/O channels is not known. We have no reports of successful installations)
- There is no critical real-time hardware capability. Only one external interrupt level is available
- There is very poor storage utilization. The lack of a memory map requires excessive shuffling of core. Programs are typically large batch programs and language processors are not reentrant as on Sigma
- Univac has proven to be a difficult company to do business with
- The Univac 1106 has demonstrated poor systems reliability in commercial environments (multiple crashes daily)
- The disk resident system (for low entry price) is unproven
- Good performance requires a large system (128K word memory is the minimum configuration for Exec 8)

Univac 1106 Specific Weaknesses Vs. Sigma 6/9

- Exec 8 requires 64K words for system residency
- Univac 1106 does not permit independent I/O controllers (integral I/O channel always cycle-steals)
- Unitized memory slows down execution time by approximately one-third
- The 1106 does not permit interleaving
- No decimal or byte-string capability

Sigma 6/9 General Strengths Vs. Univac 1106

- Sigma is a better multi-use system
- UTS handles time-sharing more efficiently than Exec 8
- Both XOS and UTS use the Sigma 6/9 memory map for efficient memory management
- Sigma 6/9 is more stable in a commercial environment

General Xerox Data Systems Strategy Vs. Univac 1106

- Stress Xerox image when competing in commercial environment
- Emphasize multi-use capabilities of UTS and XOS
- Stress systems capabilities

Specific Xerox Data Systems Strategy Vs. Univac 1106

- Demonstrate UTS with 16 to 24 terminals operating concurrently with batch. This will require a 128K Univac 1106, and both batch throughput and terminal response will be poor
- Be careful of benchmarks in pure batch environments unless we can influence
- Stress multiple terminal languages and facilities available under UTS. (Exec 8 only offers conversational FORTRAN and an editor for creating files)
- Stress Sigma 6/9 memory modularity

SECTION II

SALES PROMOTION

OVERVIEW

This section of the Sigma 6/9 Sales Guide is primarily designed to outline the available promotional literature and reference manuals associated with Sigma 6/9. This documentation includes "glossy" brochures describing hardware and software systems, installation profiles and bulletins, and the detailed reference manuals for Sigma 6/9 equipment and software.

BROCHURES – STANDARD PRODUCTS

Publication No.	Description
64-12-01A	Sigma 6 - The Computer with Business Sense (Short Form Brochure)
64-12-02A	Sigma 6 - General Information Digest
64-13-01B	Sigma 9
64-13-02B	Sigma 9 - General Information Digest
64-73-23A	The Philosophy of RBM
64-73-18B	Sigma RBM - General Information Digest
64-73-19A	Sigma BPM: The Resourceful Operating System (Short Form Brochure)
64-73-20B	Sigma BPM - General Information Digest
64-73-22A	The Xerox Operating System - GID
64-73-25A	XOS - Xerox Operating System
64-78-17C	Sigma 5/7 - General Information Digest
64-72-23A	Extended XDS FORTRAN IV
64-70-13B	Data Management System (Short Form)
64-70-14A	DMS - General Information Digest
64-77-04D	Sigma Business Programming Systems
64-78-19A	UTS: The Universal System
64-78-20A	Sigma UTS System Digest
64-79-15A	The Business Simulation Game: A New Educational Tool
64-79-10A	MANAGE: The Administrative Assistant
64-79-11A	MANAGE - General Information Digest
64-79-17A	CIRC (Circuit Design Analysis) - Data Brief
64-79-18A	SL-1 Simulation Language
64-79-21A	GPDS - General Purpose Discrete Simulator
64-79-19A	FMPS with GAMMA
64-79-14A	The Vanderbilt Statistical Package - Data Brief
66-08-02A	HEARTS: Heart Electrogram on Real-Time Systems

BROCHURES – COMPUTER SYSTEMS

Publication No.	Description
98 80 25	COMOS - Communications Operating System - Product Bulletin
98 80 26	CC-11 Wide Band Data Set Coupler - Product Bulletin
98 80 28A	CC32 Procedure Oriented Communications - Product Bulletin
98 80 53A	User Specifications for CIOP Handler
98 80 54A	Communications I/O Processor - Product Bulletin
98 80 55A	Systems Communications Product Summary
98 80 56A	Laboratory Operating System Briefing

REFERENCE MANUALS

Hardware

Publication No.	Description
90 17 13B	Xerox Sigma 6 Computer Reference Manual

Operating Systems

Publication No.	Description
90 15 81D	Sigma 5-9 Real-Time Batch Monitor Reference Manual
90 16 47B	RBM Operations Manual
90 16 53A	RBM Users' Guide
90 09 54E	Sigma 5/6/7 Reference Manual
90 11 98E	Xerox BPM/BTM Operations Manual
90 15 28A	Xerox BPM, Sigma 5-9, Technical Manual
90 17 83A	Sigma 5-9 BPM Users' Guide
90 15 77E	Sigma 5/6/7 BTM Reference Manual
90 11 98E	Xerox BPM/BTM Operations Manual
90 16 79C	BTM Time-Sharing Users' Guide
90 18 03A	BPM/BTM/UTS
90 09 07	Xerox Universal Time-Sharing System TS Reference Manual
90 16 74	Xerox Universal Time-Sharing System SM Reference Manual
90 16 75	Xerox Universal Time-Sharing Operations Reference Manual
90 16 92A	Xerox Universal Time-Sharing System Users' Guide

Language Processors

Publication No.	Description
90 09 66E	Xerox Extended FORTRAN IV-H Reference Manual
90 11 44D	Sigma 5/6/7 FORTRAN IV-H Operations Manual
90 09 56D	Sigma 5/6/7 Extended FORTRAN IV Reference Manual
90 11 43C	Sigma 5/6/7 Extended FORTRAN IV Operations Manual
90 16 54B	Sigma 5/6/7 FLAG Reference Manual
90 16 77A	FORTRAN Debug Package (Sigma 5-9) Reference Manual

Publication No.	Description
90 17 44A	Sigma 5-9 FORTRAN Debug Package Reference Card
90 15 00B	Sigma 5-9 ANS COBOL Reference Manual
90 15 01D	Sigma 5-9 ANS COBOL Operations Manual
90 15 46D	Sigma 5-9 BASIC Reference Manual
90 17 90A	SYMBOL, Sigma 5-9 Computers Language and Operations Reference Manual
90 15 78A	Xerox MACRO-SYMBOL Operations Manual
90 09 52E	Xerox META-SYMBOL, Sigma 5-9 Language and Operations Reference Manual

Applications/Utility Packages

Publication No.	Description
90 17 38A	Data Management System Reference Manual
90 16 10B	MANAGE Reference Manual
90 15 02A	1400 Series Simulator Ref Manual
90 17 86A	CIRC-TR Reference Manual Users' Guide
90 16 76A	SL-1 Reference Manual (Sigma 5-9)
90 17 58A	GPDS Reference Manual
90 09 06E	Xerox Mathematical Subroutine (Sigma 5-9)
90 15 05A	Numerical Subroutine Package Technical Manual

HEALTH CARE ACCOUNT BRIEF

CUSTOMER

Miami Heart Institute
Miami, Florida

XEROX DATA SYSTEMS OFFICE

Orlando, Florida

BUSINESS

Miami Heart Institute is a research-oriented hospital which is dedicated to the improvement of patient care. They have 175 beds and a large staff of well-trained personnel. The Institute is heavily endowed with personal and government grants. Therefore, the cost of good medical attention is a secondary consideration.

ORGANIZATION

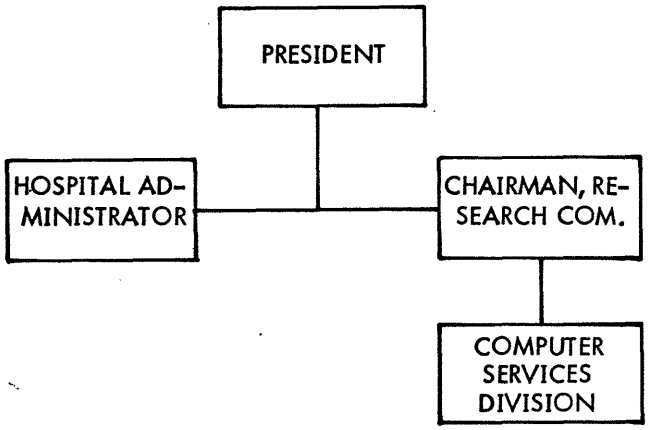

APPLICATION/USAGE

The customer had four requirements:

1) The prime objective was for patient monitoring. Such tasks as on-line cardiovascular data analysis, ECG diagnosis, indicator-dilution curve analysis, oximetry determinations, and blood-gas monitoring were required.

2) Monitor the clinical lab instrumentation. These instruments included an Autoanalyzer, Coulter Counter, Nuclear Counter, etc.

3) Integrate the data into a common database available throughout the hospital via terminal inquiry.

4) Add ancillary services to the database. These services include patient census, patient billing, payroll, inventory, nurse scheduling, etc.

CUSTOMER ATTITUDES

1) The members of the research committee were extremely self-reliant and bright. They felt no problem was too big to conquer.

2) Turned off by IBM.

3) Felt no vendor had satisfactory application software. Therefore, they were prepared to develop everything themselves.

4) The hospital administrator could be easily overruled by the research committee.

REQUIREMENTS (PROBLEMS)

1) Wanted to design all applications around a data management system.

2) Desired terminal query.

3) Concerned about availability of system.

XEROX DATA SYSTEMS BID

128K Sigma 9, 50MB Disk, 4 RAD's, 3 magnetic tapes, 1100 LPM line printer

COMPETITION

CDC 3600

IBM 360

UNIVAC 1106

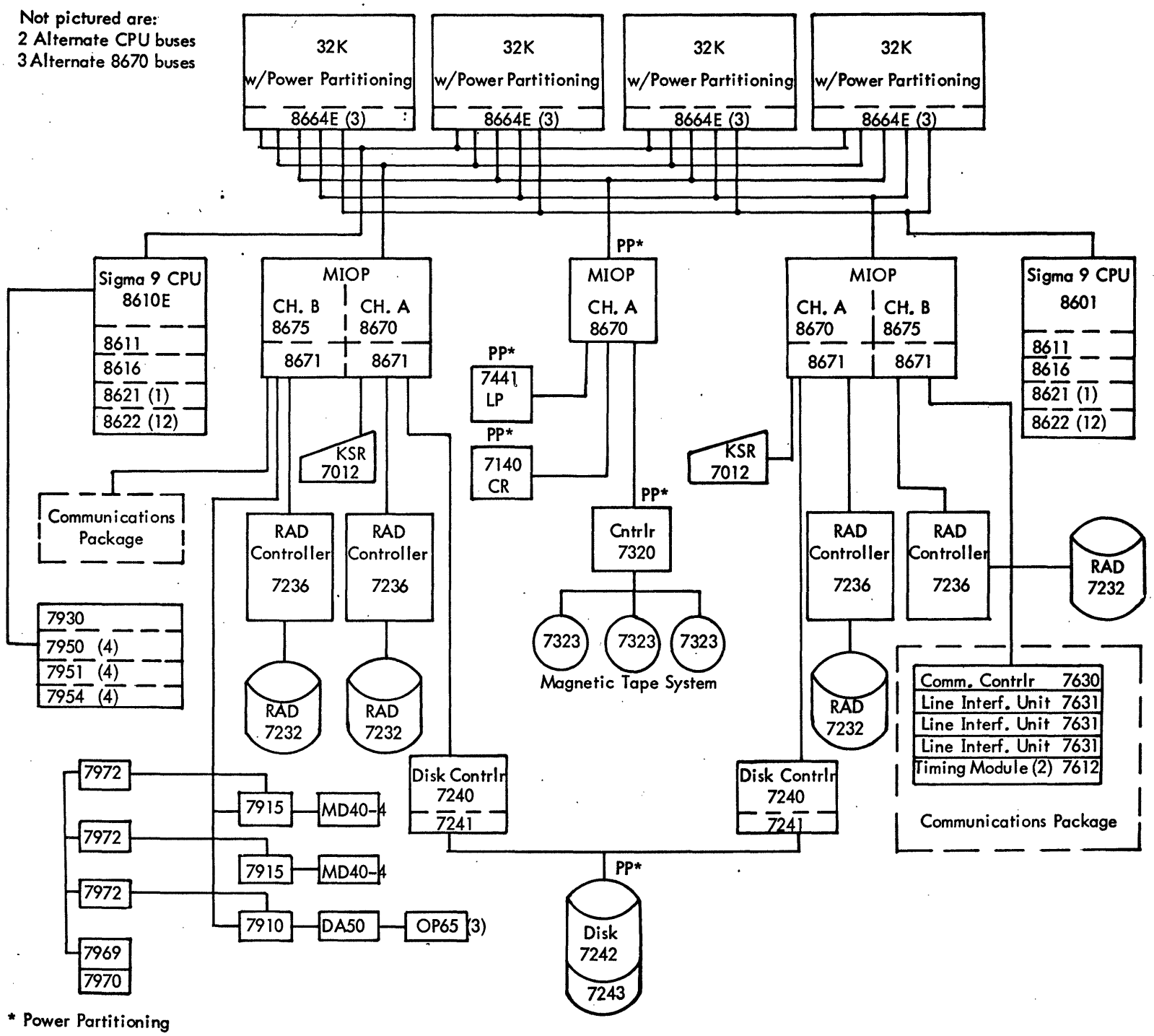
Not pictured are:
2 Alternate CPU buses
3 Alternate 8670 buses
32K w/Power Partitioning 8664E (3)
32K w/Power Partitioning 8664E (3)
32K w/Power Partitioning 8664E (3)
32K w/Power Partitioning 8664E (3)
Sigma 9 CPU 8610E
8611
8616
8621 (1)
8622 (12)
MIOP
CH. B 8675
CH. A 8670
8671
8671
PP*
MIOP
CH. A 8670
PP*
7441 LP
PP*
7140 CR
MIOP
CH. A 8670
CH. B 8675
8671
8671
Sigma 9 CPU 8601
8611
8616
8621 (1)
8622 (12)
KSR 7012
KSR 7012
Communications Package
RAD Controller 7236
RAD Controller 7236
PP*
Cntrlr 7320
RAD Controller 7236
RAD Controller 7236
RAD 7232
7930
7950 (4)
7951 (4)
7954 (4)
RAD 7232
RAD 7232
7323
7323
7323
Magnetic Tape System
RAD 7232
Comm. Contrlr 7630
Line Interf. Unit 7631
Line Interf. Unit 7631
Line Interf. Unit 7631
Timing Module (2) 7612
Communications Package
7972
7972
7972
7969
7970
7915
MD40-4
7915
MD40-4
7910
DA50
OP65 (3)
Disk Contrlr 7240 7241
Disk Contrlr 7240 7241
PP*
Disk 7242 7243
* Power Partitioning

MANUFACTURING ACCOUNT BRIEF

CUSTOMER

Rochester Products Division (RPD)
General Motors Corporation (GMC)
Rochester, New York

XEROX DATA SYSTEMS OFFICE

Rochester, New York

BUSINESS

RPD is an integrated fabrication and assembly manufacturer, supplying about 70 percent of its products to GMC and about 30 percent to other automobile manufacturers and the independent automobile dealer after market. Although they function as a semi-autonomous division within the GMC structure, their orientation is heavily manufacturer dominated. Research, marketing, and strategic planning functions are done by corporate.

RPD produces all carburetors and fuel-injection devices for GMC as well as fabricating roll tubing into a variety of products such as cigarette lighters, door handles, and trim molding. They employ from 5000 to 6000 people.

ORGANIZATION

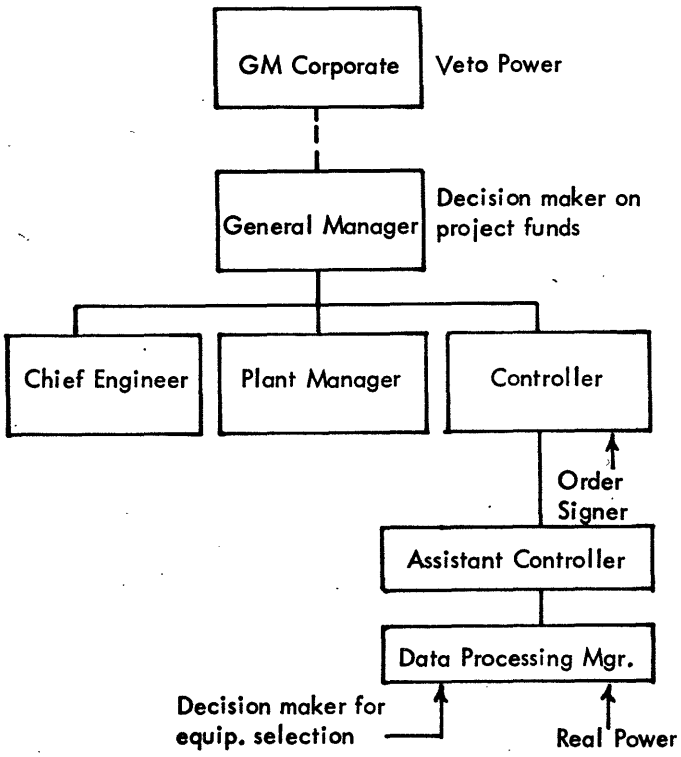

APPLICATION/USAGE

RPD originally installed an IBM unit record system, then an IBM 1401 and, in 1964, procured an HIS 400 tape system (purchased). They later purchased a second HIS 400 tape system in 1967. Current tape applications include payroll and general ledger accounting as well as sales and production statistic reporting. They procured in 1968 a GE-PAC 4020 for automated carburator testing. They later added a second GE-PAC 4020 for automated adjusting and backup.

NOTE: Almost all manufacturing scheduling, control, and inventory control are done manually although reporting may be via computer printout.

CUSTOMER ATTITUDES

1) Very happy with both computer installations; is not at all interested in integrating them into a new system now. Desires capability to phase them into new system in three to five years, however.

2) Anti-IBM; pro-Honeywell, GE, and Univac

3) Dislikes unbundled services

4) Demands on-site customer engineer

5) Feels that database management techniques are the only way to build a manufacturing management information system

6) Dislikes Xerox domination in Rochester

7) Independent of corporate

REQUIREMENTS (PROBLEMS)

1) Wants to design all applications about a data management system using ANS COBOL and operate these in a multiprogramming environment.

2) Desires terminal query and update of his database.

3) Concerned about education, systems engineer, and customer engineer support.

4) Desires small amount of time-sharing or remote job entry for engineers.

5) Wants good hardware but since "everybody makes good hardware today", he is looking for good software capability which is ANS standard.

6) Desires ability to communicate with corporate database (future).

XEROX DATA SYSTEMS BID

80K Sigma 6, 200MB Disk ($28,000/month - 6-year lease), 4 tapes, RAD, 1500 LPM line printer

COMPETITION

Univac 1106	$25,000/month
IBM 145	$31,000/month
GE 615	$29,000/month

XEROX DATA SYSTEMS STRENGTHS

Strengths	How Sold (Reinforced)
. Best database management	. Demonstrated DMS using part of RPD's parts file
. Superior operating system (UTS)	. Demonstrated in El Segundo - UTS running three concurrent COBOL programs
. Superior communications and architecture	. Demonstrated time-sharing, Terminal Oriented MANAGE (TOM), and EDIT . Provided duPont as reference account
. Understood his requirements	. Instant responsiveness to all questions and requests for information
. Excellent maintenance support	. Used field engineering manager to brief customer of our capabilities

XEROX DATA SYSTEMS WEAKNESSES

Weaknesses	How Overcome
. Chief competitor (Univac) has a full blown Univac 1108 with Exec 8 running extremely well in Xerox	. Never really did — just sold around it
. Xerox is using twin IBM 360/50's in manufacturing applications similar to RPD's	. Took customer to briefing on our conversion plans (within Xerox)
. UTS operating system unreleased; not field proven	. Demonstrated UTS in El Segundo; sold BTM as field proven interim system which would satisfy short-term requirements
. No Sigma 6's installed in GMC (or anywhere)	. Used Sigma 5/3 GMC installations as reference proof of our capability
. DMS unreleased and not installed anywhere	. Flew customer to Cogar Corporation for demonstration and DMS discussion . Had representative from education group teach three-day DMS hands-on course . Had representative from Advanced Design meet with corporate database expert

WHY DID WE WIN

- Clearly superior in most important area (DMS)
- Sold multi-use concept
- Met more overall requirements
- Developed inside salesman (always knew what competition was up to)
- Were aware of our weaknesses and planned ways to overcome them
- Proved via demonstrations and presentations that we knew customer requirements and could meet them

TEAM APPROACH (INFORMAL)

Initial sales calls were made by the salesman to determine customer requirements. The salesman brought this information back to the district where the district sales manager, the district systems manager, and one or two analysts participated in a group discussion, pointing out:

1) Our areas of strengths and weaknesses

2) Our competitor's strengths and weaknesses

3) Outlining what further information we needed to set a strategy

4) Determining what resources (such as demos) we might use to strengthen our credibility, thus allowing us to execute a sales strategy

After several iterations of this (3 to 5 sales calls with analysts participating), this same group set an initial strategy (with alternatives) to be executed as an action plan by the salesman with the assistance of pre-sales analysts and other support areas. The "team" was continually modified to meet the tactical requirements.

NOTE: Examples of actual action plans executed can be seen by chronology of events for each account.

GMC-RPD CHRONOLOGY OF MAJOR EVENTS

Date (1970)	Major Event
May 15	Cold call to get placed on vendor list for upcoming procurement (Xerox Data Systems not originally included in 8-company vendor list)
May 27	Sales call which determined organizational structure, competition, and customer requirements
June 8	One-day survey and systems analysis of customer information system requirements
June 18	Initial product (DMS) presentation as solution to RPD's needs
June 25, 26	Major presentation on Xerox Data Systems capabilities in Xerox Square boardroom, utilizing Sigma demo at Rochester Data Center and TOM demo (courtesy - Rochester Commercial Systems Integration)
July 1	Sales calls to evaluate our standing. Xerox Data Systems in top three by virtue of DMS, communications capability, and software capability
July 8	Symbiont "Spin" demo at Rochester Data Center (Two line printers, card reader, card punch, 4 tapes - all moving)
July 10	Sales call with manufacturing consultant from Contract Services (Commercial Systems)
July 17	TOM demo at Rochester district to selection committee (received copy of other vendor's pricing)
July 22	Inside salesman at RPD briefed us that final choice was between Univac 1106 and us (Univac does not have DMS capability)
July 23	Used Xerox corporate aircraft to visit Cogar Corporation and Comserv with selection committee
July 29	Management call on John Wilson, general manager of RPD (learned that we were clearly #1 — if we could demonstrate our claims)
August 7	DMS demo & presentation in Rochester to selection committee (first COBOL demo of DMS to customers)
August 14	Visit with selection committee by manager of Industry Marketing to reinforce concept of Xerox Data Systems commitment to manufacturing marketplace
Sept 24	Plant tour in El Segundo for: . UTS demo & presentation . 7441 Line Printer . Executive luncheon . Manufacturing tour (very successful)
October 8	Presented educational training schedule and set up consultation on DMS for database design
Nov 11, 12, 13	DMS course taught in Rochester to RPD personnel

Date (1971)	Major Event
Feb 19	Presentation to GMC systems committee in Detroit, including: . Product overview . DMS presentation . Communications presentation . Transferability presentation (This was key to convincing GMC Corporate that RPD had selected best vendor)
March 19	Letter of intent received
March 29	RPD personnel began education at RCSI Training Center
May 20	RECEIVED P.O.1111

ROCHESTER PRODUCTS DIVISION OF GENERAL MOTORS –

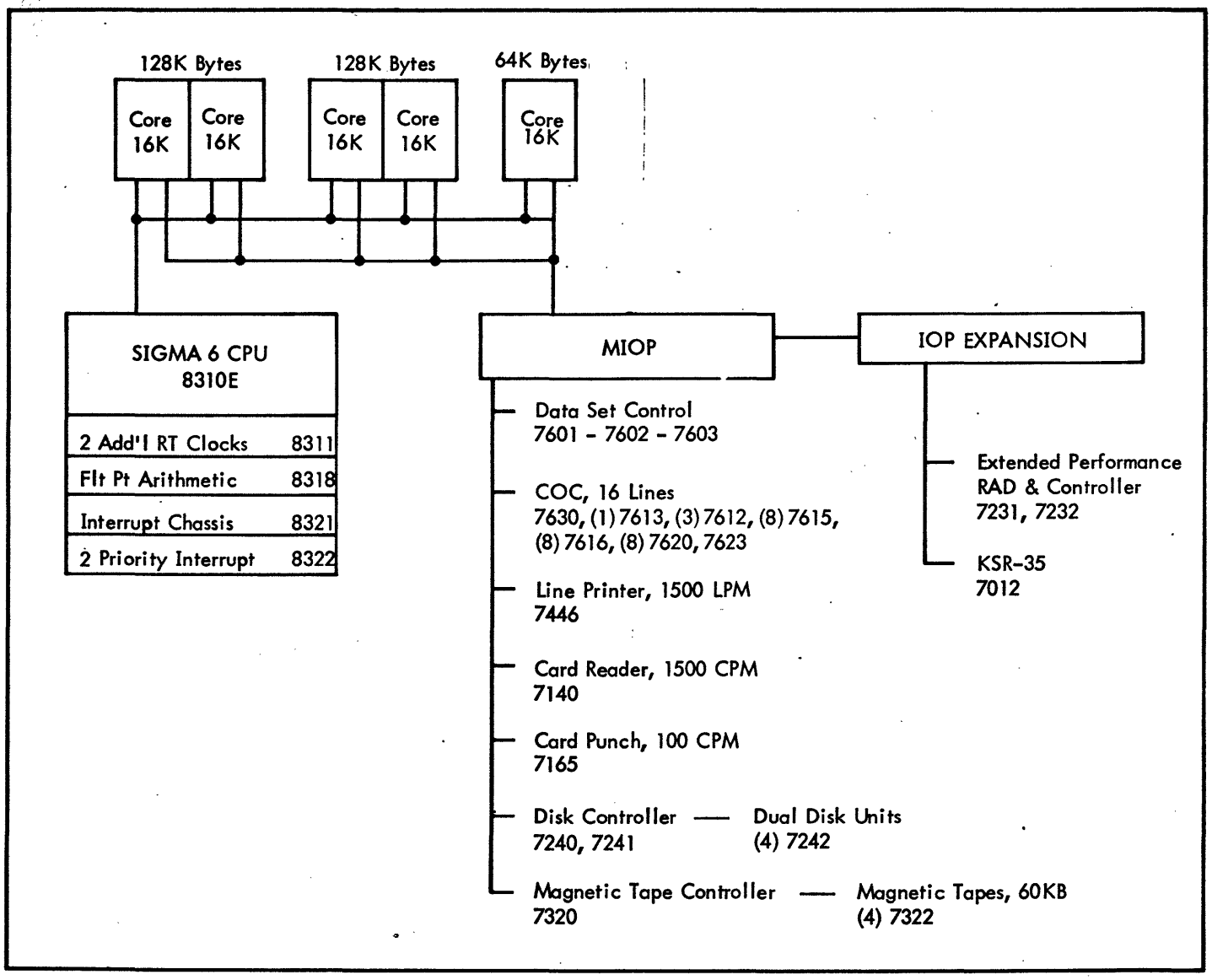

EDUCATION ACCOUNT BRIEF

CUSTOMER

Tennessee Technological University
Cookeville, Tennessee

XEROX DATA SYSTEMS OFFICE

Atlanta, Georgia

BUSINESS

Tennessee Tech is a technical university with an enrollment of approximately 6000 students and an annual budget of $12 million. The college of engineering is the largest school on campus.

ORGANIZATION

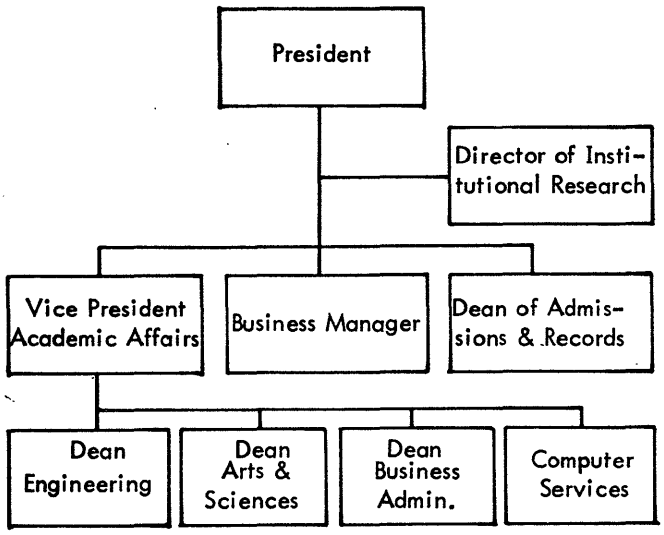

APPLICATION/USAGE

The installed IBM 360/40 was used to provide data processing for the entire university. An IBM 1401 was removed when the IBM 360/40 was installed and all of the administrative work of the university had been converted. The research and instructional load amounted to approximately 70 percent of the computer utilization. The system was run three shifts, seven days a week, and was completely saturated.

CUSTOMER ATTITUDES

1) The president and business manager were extremely pro-IBM.

2) The state budget was being cut and no additional money could be made available for computing.

3) The computer center staff were open-minded to solving the dilemma they were facing.

REQUIREMENTS

1) Run batch FORTRAN and batch COBOL a minimum of five times faster than the IBM 360/40.

2) Provide larger core configuration in order that the university researchers might run larger jobs.

3) Provide a solution within the $200,000 annual hardware budget.

XEROX DATA SYSTEMS BID

64K Sigma 6, 75MB Disk, 3MB RAD, Commercial Line Printer, Two Magnetic Tapes (low speed)

COMPETITION

1) IBM 370/145 met all of the requirements, but was the highest in price by $1000 per month.

2) Univac 1106 met all of the requirements and was best in the benchmark. Quality of marketing effort was extremely poor; quantity of marketing effort was heavy.

3) CDC 3600 met all of the requirements and was lowest in price by $4000 per month; however, they bid more equipment than was required. The president of the university considered CDC to be an unethical company and refused to consider them at any price.

4) Honeywell 6000 marketing effort started too late and they did not run a benchmark. Their price was attractive but they were not seriously considered.

5) RCA 70/61 price was attractive but they showed poor batch performance and poor software.

XEROX DATA SYSTEMS STRENGTHS

Strengths	How Sold
. Good batch performance	. Ran benchmark and then wrote benchmark report comparing performance to installed system. Pinned down performance evaluation criteria
. Terminal capability	. Pushed independence associated with terminals in the administrative areas. Demonstrated TOM
. Understood requirements	. Performed a business office survey and wrote a report

XEROX DATA SYSTEMS WEAKNESSES

Weaknesses	How Overcome
. Doubt regarding administrative data processing capability	. Created a special administrative data processing demo using customer's programs
. No Sigma 6's installed	. Used reference Sigma 7 accounts
. Conversion a problem	. Investigated some typical programs and came up with a conversion estimate. Pinned down cost
. Poor maintenance reference from Xerox Data Systems user	. Countered with good local references

WHY DID WE WIN

We started early and were prepared to work hard for at least six months to learn the applications and sell a solution to each.

We pinned down performance early.

We firmed up the requirements with an unsolicited proposal listing everyone's needs.

We overcame objections presented by the administration in a positive way such as tailored demos and business office surveys.

Once we were ahead, we pushed for a fast close.

SIGMA 6 CONFIGURATION FOR TENNESSEE TECHNOLOGICAL UNIVERSITY –

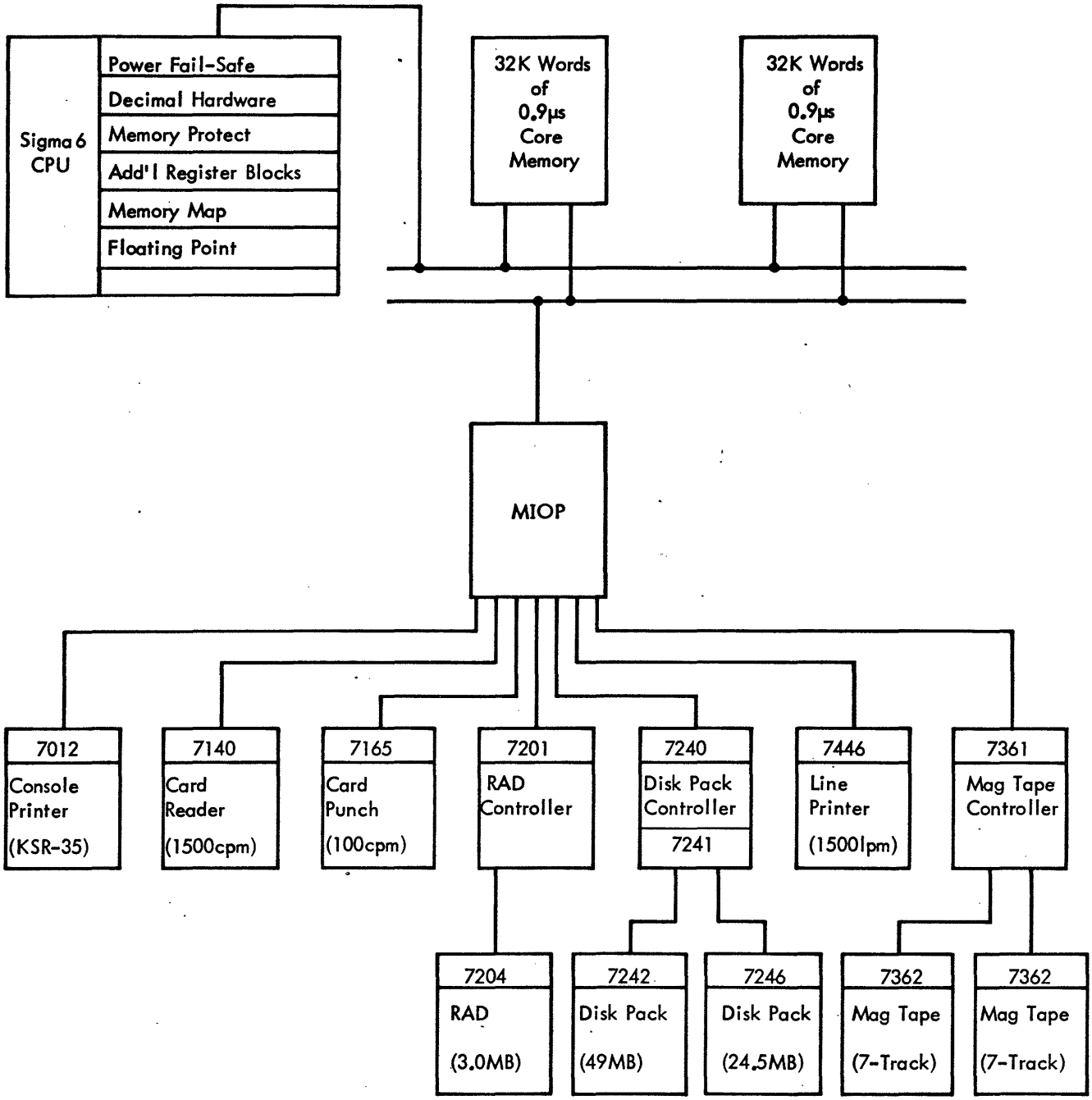

DOD ACCOUNT BRIEF

CUSTOMER

Naval Air Test Center (NATC)
Patuxent River, Maryland

XEROX DATA SYSTEMS OFFICE

Rockville, Maryland

BUSINESS

NATC at Pax River is a U.S. Navy test and evaluation center responsible for conducting research, development, test, and evaluation of aircraft and their weapon systems. Programs include such activities as spin evaluations, carrier suitability trials, flying qualities, weapon drops, avionics evaluations, serviceability tests, and test pilot training. NATC is a field station reporting to Naval Air Systems Command located in Washington, D.C.

ORGANIZATION

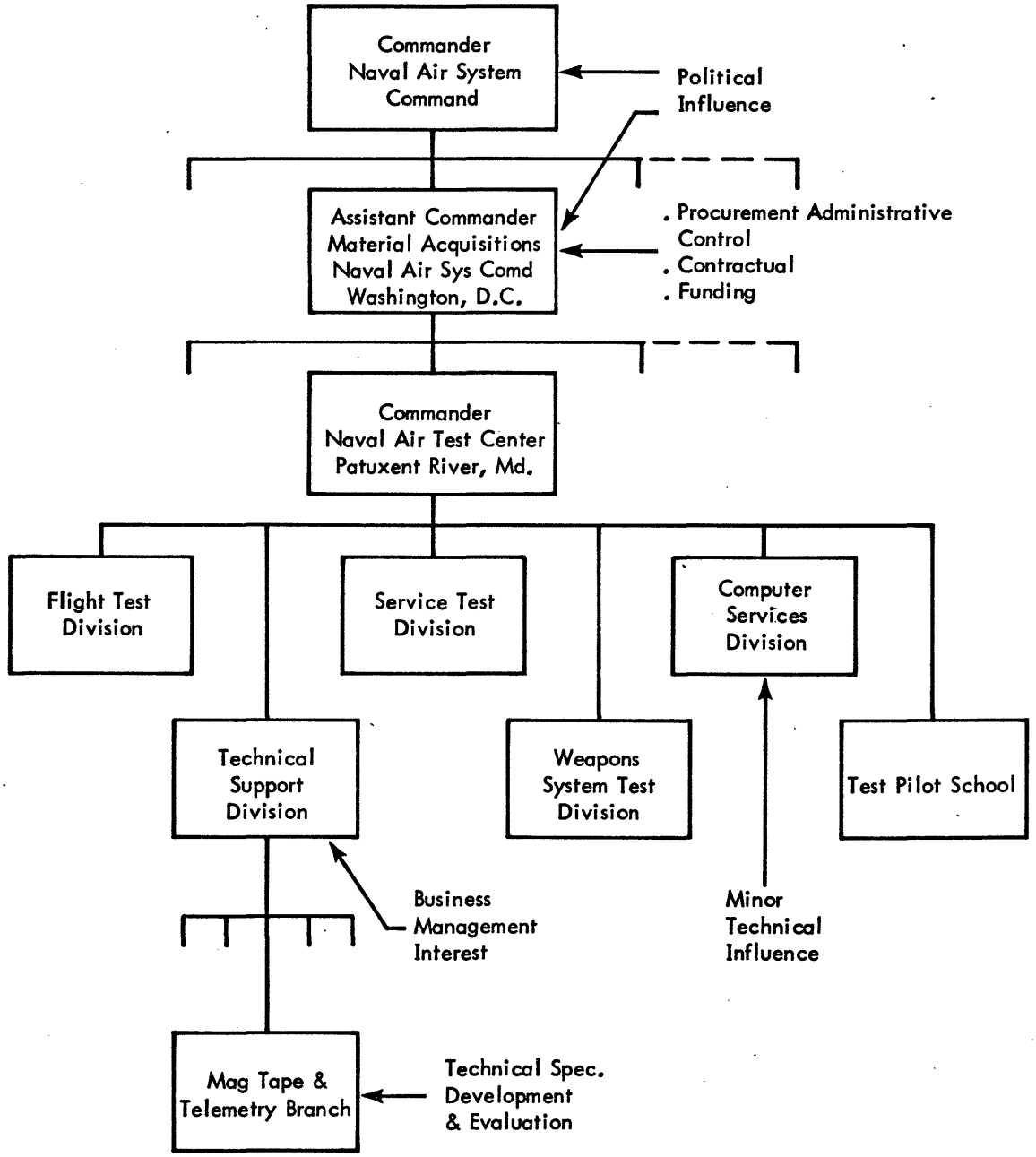

APPLICATION/USAGE

NATC (Pax River) obtained approval to acquire a real-time telemetry processing system (RTPS) to replace their existing out-moded telemetry data reduction and recording system. The Pax River technical staff prepared a detailed technical specification for a sophisticated real-time telemetry processing system which would test two aircraft in flight simultaneously with the capability of expanding to a third aircraft. The system was to automatically record, transfer, process, and display data transmitted from the aircraft in flight.

Ground station project test engineers were to be "on-line" with the test pilot through voice communications providing the capability of directing changes to flight maneuvers based on real-time analysis of the data transmitted from the aircraft.

XEROX DATA SYSTEMS BID

Subsystems	Key Components
Main processing	192K (768-byte) Sigma 9 CPU, 30MB Random Access Storage, Four 1600 BPI MTU
Pre-processing	Two 24K Sigma 3 CPU's, two 1600 BPI MTU (per CPU), Pre-processor Algorithm Unit (Special), Sigma 9 Memory Interface, Telemetry Front End Interface
Graphic display processing	32K Sigma 3 CPU, Sigma 9 Memory Interface

PRICING

Contract type:	Cost-plus-fixed-fee	
Xerox Data Systems Bid:	Standard products	$2.6 Million
	Value added	$3.3 Million
	Total	$5.9 Million

COMPETITION

1) IBM 370/145 - Main Processor
   EMR 6135 - Pre-processor

   (Went all out in Federal Systems Division to win this one — second best technical proposal!)

2) CDC 6400 - Main Processor
   CDC 1700 - Pre-processor

   (Switched to Cyber Series later. Felt they had marketing leverage in the Navy.)

3) Grumman Data Systems
   CDC 6400 - Main Processor
   Varian 620/i - Pre-processor

   (Relied heavily on their existing ATS F-14 Flight Test Telemetry System as a reference of their expertise.)

CUSTOMER ATTITUDES

1) Heavily influenced by Control Data and Grumman Data Systems; both bidding CDC 6400 CPU's.

2) Respected Xerox Data Systems flight test telemetry experience, but felt that Xerox Data Systems did not have a computer system large enough to handle the large-scale processing requirements.

3) Impressed with IBM's overall systems capability; particularly with their participation in the National Space Program.

4) Concerned about contractors being able to meet RTPS tight delivery schedule of twelve (12) months which was needed in order to be ready to test the Grumman F-14 aircraft.

5) Expected strong pressure from Grumman Data Systems to build a duplicate system like the one nearing completion at Grumman for F-14 testing.

REQUIREMENTS

1) Provide a system to decode telemetry, pre-process and format data, perform database storage and analysis, and permit graphic interrogation and display.

2) Receive both PCM and FM formatted data into each data stream concurrently at the rate of up to 1.2 megabits. (Initial system includes two streams expandable to a third.)

3) Provide an elaborate and extensive software system to perform front-end telemetry data handling, file storage and access, and graphics display interaction.

4) Provide main processor to include large-scale multiprocessing and multiprogramming-type computer with capability of directly addressing 480K bytes of core for applications programs (exclusive of that mainframe core required for systems software).

5) Provide a complete turnkey operational system to include system design, development, and integration and all required maintenance, training, and technical support.

XEROX DATA SYSTEMS STRENGTHS/WEAKNESSES

Strengths	How Sold/Overcome
. Experience in the flight test telemetry field . Recent McDonnell Douglas DC-10 system success . Strong real-time systems engineering capabilities . Hardware/software architecture	. Great joint sales strategy between sales and Western Technology Center (WTC) . Emphasized that it was a "telemetry system", not a computer system . Emphasized that the Navy was essentially buying a telemetry project team — - People qualifications - Management qualifications . Extremely competent technical proposal was written . Sold software expertise . Sold Sigma real-time architecture and upward compatibility from Sigma 5/6/7 . Ran customer benchmark under DBM and UTS on Sigma 9
Weaknesses	
. Newness of the Sigma 9 . Inexperience at bidding CPFF contracts . Inexperience at bidding large-scale contracts as a prime contractor to the Government . Specification was written around Grumman and Control Data telemetry system philosophies and not oriented toward Sigma architecture	

WHY DID WE WIN

We were able to convince the user that we were the most technically qualified contractor who could get his job done properly in the shortest period of time.

He wanted us to win before proposals were submitted, but the quality of proposal response completely endorsed our verbal sales efforts.

PAX RIVER CHRONOLOGY OF MAJOR EVENTS

Date (1969)	Major Event
Sept 1	Lead obtained from F-14 Project Office in Washington, D.C. No real confidence that program will be funded

Date (1970)	Major Event
July 15	Advance presentation of Sigma 9 system given to Pax River personnel. Good presentation but no commitment by Xerox Data Systems that Sigma 9 could be used at Pax
Sept 22	Provided a detailed report on the status of the DC-10 system integration; urged contact of McDonnell Douglas project leader. Customer attitude mixed — not particularly receptive
Sept 29	Presentation of Xerox Data Systems computer system capability and telemetry experience; description of McDonnell Douglas system. General interest

Date (1970)	Major Event
Oct 6	Series of technical discussions held at Pax River to best understand the requirements and discuss Xerox Data Systems basic technical approach. Well received. Key technical evaluator very impressed
Nov 5	Demo given at NASA-Goddard Space Flight Center on Xerox Data Systems satellite tracking systems. Good demo and support of Xerox Data Systems generally but BPM "bad-mouthed" as a real-time monitor
Dec 1	RFQ issued. Requested turnkey system on a CPFF contract basis. Spec not Sigma-oriented. Grumman or Control Data considered favored

Date (1971)	Major Event
Jan 5	Xerox Data Systems decides to bid; WTC assembles a highly competent proposal team. Sales deeply involved in writing of features and benefits part of proposal
Jan 15	Submitted unsolicited proposal for flight test telemetry system
Jan 22	Very detailed proposal submitted covering technical approach and business management (28 lbs per copy)! Proposal effort well coordinated between sales and WTC

Date (1971)	Major Event
Feb 14	Visit to El Segundo for DC-10 demo. Demo "too canned" and limited
March 19	Visited Rear Admiral, Naval Air Systems Command, to discuss Xerox role in information handling systems. Admiral only interested in what specific projects Xerox had performed for the Navy
May 6	Response to technical questionnaire — need to improve in business management training and Sigma 9 credibility areas
May 28	We feel that Xerox Data Systems is not low bidder; competitors closing technically - expect significant price reductions from all bidders in submission of best and final offer
June 2	Technical conference held with Navy Customer's questions no problem - WTC/sales team preparation pays off
June 15	Final proposal submission including best and final offer. Approval from top management obtained in final submission
June 16	Evaluation of Sigma 9 benchmark. Customer impressed with operation of DBM and UTS on Sigma 9
July 23	Winning contractor selected; expected delay to obtain approval from Assistant Secretary for Financial Management
Sept 15	Xerox Data Systems notified that it had won Pax River procurement
Nov 4	Official announcement of Pax River award for Xerox Data Systems

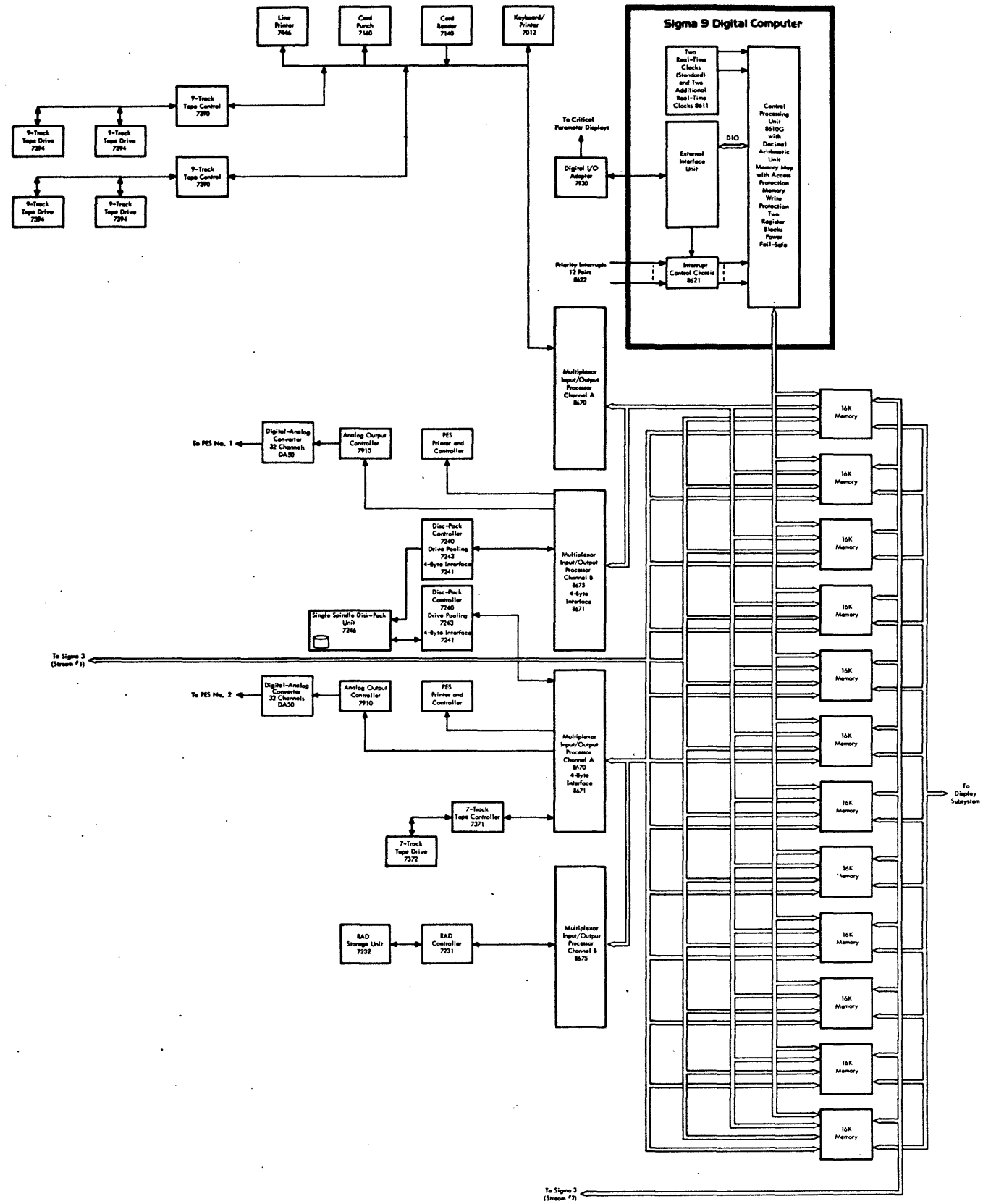

CENTRAL PROCESSING SUBSYSTEM BLOCK DIAGRAM