The WY-50 Maintenance Manual

PREFACE

This maintenance manual contains information on how to service and repair the WY-50 terminal. We assume you are a qualified service technician with previous experience in terminal and computer repair. To take full advantage of this manual, we suggest you read the information in the order presented.

HOW TO USE THIS MANUAL

This manual is divided into six chapters and three appendixes. Chapter one provides important information for the technician who has never serviced this terminal before. If you are already familiar with the terminal, the technical information in Appendix A can serve as an ongoing introduction to the terminal. Here is a summary of this manual:

Chapter 1, "Product Overview" describes the terminal, including internal functions, I/O, telecommunications, environmental needs, and operator controls.

Chapter 2, "Removal and Replacement Procedures" shows you how to take the terminal apart and put it back together again. It includes instructions on how to change power requirements on the terminal from domestic to international.

Chapter 3, "Troubleshooting" tells you what to look for and how to fix problems on the terminal. It includes a list of tools needed for troubleshooting, a quick reference guide, and a flowchart.

Chapter 4, "Adjustments and Alignments" describes power supply and monitor adjustments that control the quality of the display.

Chapter 5, "Illustrated Parts List" includes a list of display and keyboard assembly parts.

Chapter 6, "Theory of Operation" describes the terminal operation by function.

Appendix A, "Specifications" lists the terminal's specifications.

Appendix B, "Connector Pin Assignments" lists the signals on each pin of the MODEM and the AUX ports located on the rear panel of the terminal.

Appendix C, "Schematics" includes schematics for the microprocessor PCB, keyboard, and monitor/power supply PCB.

REFERENCE MANUALS

These publications provide additional information about the terminal.

WY-50 Display Terminal Reference Manual, Wyse 88-011-01

WY-50 Display Terminal Quick Reference Guide, Wyse 88-021-01

CONTENTS

PREFACE..... iii

1. GENERAL INFORMATION..... 1-1
Introduction..... 1-1
High Level Functional Description..... 1-2
Microprocessor..... 1-2
Memory..... 1-2
Input/Output Devices..... 1-4
Telecommunications..... 1-6
Environmental Considerations..... 1-6
Operator Controls..... 1-7
Setup Parameters..... 1-9
Cleaning..... 1-10

2. REMOVING AND REPLACING COMPONENTS..... 2-1
Modules..... 2-1
Fuse Replacement..... 2-4
Keyboard Replacement..... 2-5
Keyboard Cable Replacement..... 2-6
Keyboard PCB Replacement..... 2-7
Top Cover Replacement..... 2-8
Replacing the Monitor/Power Supply PCB..... 2-8
CRT/Yoke Assembly Replacement..... 2-12
Brightness Potentiometer Replacement..... 2-14
AC Power Switch Replacement..... 2-15
Microprocessor PCB Replacement..... 2-17

3. TROUBLESHOOTING..... 3-1
Power-On Selt Test..... 3-1
Diagnostic Self Test..... 3-2
Troubleshooting..... 3-3

4. ADJUSTMENTS AND ALIGNMENTS..... 4-1
Power Adjustments..... 4-1
Adjustments..... 4-5

5. ILLUSTRATED PARTS LIST..... 5-1
WY-50 Display Assembly Parts List..... 5-2
WY-50 Keyboard Assembly Parts List..... 5-4

6. THEORY OF OPERATIONS..... 6-1
Introduction..... 6-1
Raster Scan Terminology..... 6-1
Printed Circuit Board Layout and Component Identification..... 6-2
Microprocessor PCB Block Diagram..... 6-3
CRT and Power Supply Block Diagram..... 6-8
Keyboard Block Diagram..... 6-13
Functional Description..... 6-14

APPENDICES

A. SPECIFICATIONS..... A-1

B. CONNECTOR PIN ASSIGNMENTS..... B-1

C. SCHEMATICS..... C-1

INDEX..... 1

LIST OF FIGURES

1-1 Simplified Block Diagram..... 1-1
1-2 Memory Map..... 1-3
1-3 Keyboard..... 1-5
1-4 Terminal Dimensions..... 1-6
1-5 Operator Controls..... 1-7
2-1 Four Major Modules..... 2-2
2-2 Orientation View of Terminal and Components..... 2-3
2-3 Line Fuse Location..... 2-5
2-4 Keyboard Assembly..... 2-6
2-5 Monitor/Power Supply and Chassis..... 2-10
2-6 CRT/Yoke Assembly..... 2-12
2-7 Operator Brightness Potentiometer..... 2-14
2-8 AC Power Switch Removal..... 2-16
2-9 Microprocessor PCB Removal..... 2-18
3-1 Test Jumper..... 3-2
3-2 Troubleshooting Flowchart..... 3-4
3-3 Power Connector at the Microprocessor PCB..... 3-8
4-1 Monitor/Power Supply Component Layout..... 4-1
4-2 Yoke Lock on the CRT Neck..... 4-7
4-3 Display Magnets..... 4-8
6-1 Microprocessor PCB..... 6-2
6-2 Microprocessor PCB Block Diagram..... 6-4
6-3 Monitor/Power Supply Block Diagram 6-10
6-4 Horizontal Oscillator Timing..... 6-12
6-5 Vertical Timing..... 6-13
6-6 Keyboard Block Diagram..... 6-13

LIST OF TABLES

3-1 Error Message Definitions..... 3-1
4-1 Problems and Adjustments..... 4-4
4-2 Screen Areas Affected by Display Magnets..... 4-9
6-1 8031 Pin Assignments..... 6-14

1 GENERAL INFORMATION

INTRODUCTION

The WY-50 is a compact, high-performance, low-cost terminal capable of meeting the needs of a wide variety of applications. The terminal consists of a display console and a detached keyboard from which data can be entered for display on the cathode ray tube (CRT). All of the electronics needed to support the display and keyboard are in the terminal.

In addition to the CRT and keyboard, the terminal contains two independent telecommunications interfaces. Peripherals, such as a hard-copy printer, attach to the terminal with the auxiliary interface connector on the rear panel.

All the component parts are organized around and controlled by the microprocessor. The microprocessor controls all internal data manipulation and processing functions. Figure 1-1 is a simplified block diagram of the terminal.

Figure 1-1 Simplified Block Diagram

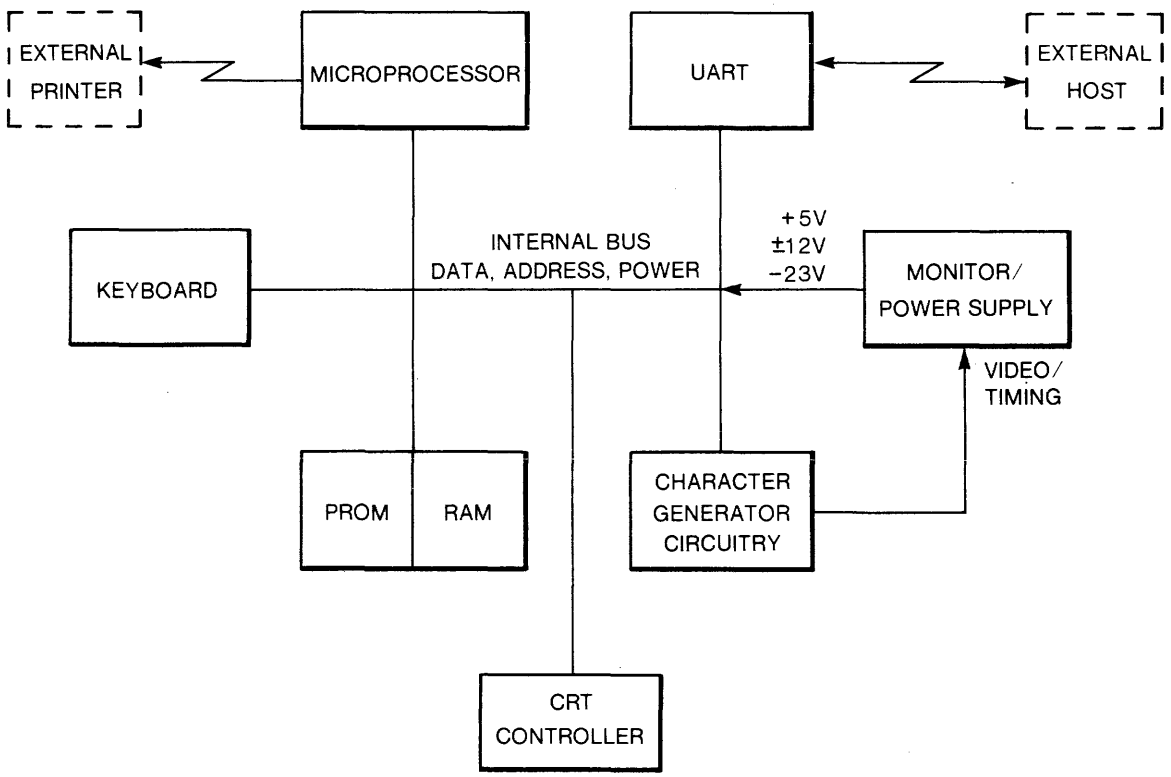

HIGH LEVEL FUNCTIONAL DESCRIPTION

The terminal consists of a microprocessor, a CRT controller, associated control logic, and input/output (I/O) devices. This circuitry is mounted on a single printed circuit board (PCB) in the display console pedestal. The microprocessor controls all basic functions. Timing and control signals for the CRT are generated on the microprocessor PCB. The deflection, high-voltage, and power supply circuitry are located on a single PCB that sits just below the neck of the CRT. Cabling connects the microprocessor PCB and the monitor/power supply PCB. The microprocessor PCB is in the base of the terminal. The monitor/power supply PCB is inside the monitor.

MICROPROCESSOR

The heart of the terminal is an 8-bit, single component microprocessor that has 128 bytes of RAM, 32 I/O lines, two 16-bit counter/timers, a full-duplex UART, and integral interrupt and clock circuitry. The microprocessor uses an external EPROM for program storage. This EPROM can be either 4K, 8K, or 16K. In addition to EPROM, a buffer consisting of up to 4K of RAM holds display information. The microprocessor, CRT controller, and telecommunications interface electronics are attached to a bidirectional bus. These circuits can perform their functions independently while interfacing with the microprocessor or the memory on a direct-memory access (DMA) or interrupt basis.

MEMORY

The memory consists of RAM, EPROM, and EAROM. The RAM stores display information, which is repeatedly read from memory by the CRT controller. This information refreshes the CRT screen. The EPROM stores programs and contains the power-up and self-test routines. The EAROM stores the operator's setup parameters (i.e. baud rate and parity). The microprocessor has an address range capability of 64K. In addition to this addressing range capability, the microprocessor treats external program storage (EAROM) separately (it has its own enable line). This means that an external EPROM can use an additional 64K memory space without infringing on the space available for I/O or RAM. Figure 1-2 is a memory map for the terminal. Note that the EPROM is not shown in the figure because it does not occupy I/O or memory address space.

The standard RAM capacity is 4K and consists of two 2K x 8 RAMS. Each 2K x 8 RAM is allowed 8K of address space. The lower RAM

3FFFH. Since each RAM uses only 2K of address space, the RAM addressing wraps around at 2K page boundaries. The system firmware addresses the RAM from 1800H to 27FFH in order to access 4K of unique contiguous location.

Figure 1-2 Memory Map

HEX ADDRESS			
0000H	0FFFH	1st 2K OF RAM	RAM
1000H	1FFFH		
2000H	2FFFH	2nd 2K OF RAM	
3000H	3FFFH		
4000H	4FFFH	CRT CONTROLLER	CRT CONTROLLER
5000H	5FFFH		
6000H	6FFFH	S.I.O. (UART)	UART
7000H	7FFFH		
8000H	8FFFH	ROW BUFFER DIAGNOSTIC REGISTER	ROW BUFFER DIAGNOSTIC REGISTER
9000H	9FFFH		
A000H	AFFFH	KEYBOARD LATCH	KEYBOARD
B000H	BFFFH		
C000H	CFFFH	EAROM	EAROM
D000H	DFFFH		
E000H	EFFFH	UNASSIGNED	
F000H	FFFFH		

INPUT/OUTPUT DEVICES

The I/O devices consist of a keyboard, a CRT display, and two telecommunications interfaces.

Keyboard

The keyboard consists of 101 keys mounted on a single-sided printed circuit board. All keys have full-travel, hard-contact switches. The microprocessor periodically scans the keys checking for a key closure. Figure 1-3 illustrates the terminal's keyboard. A detailed description is found in "Theory of Operations," Chapter 6.

Figure 1-3 Keyboard

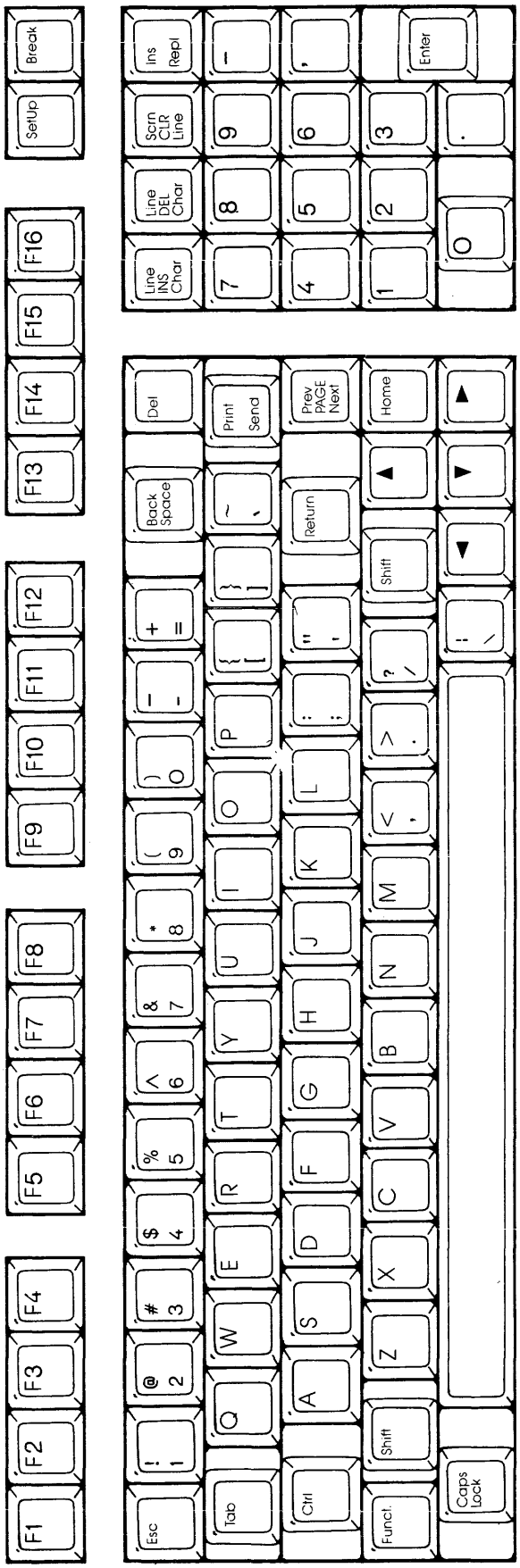

CRT Display

The terminal has a 14-inch CRT. It displays 24 rows of characters (either 80 or 132 columns) and two control rows (one for terminal status and the other for function key identification). The CRT controller reads displayed characters from RAM on a direct memory access basis.

TELECOMMUNICATIONS

The terminal has two independent asynchronous interfaces that conform with the EIA standard RS-232C. Data rates can be set independently for either interface. The setup procedures in this chapter define the operator-controlled parameters. The operator-controlled parameters are defined in the setup procedures in this chapter. The primary (modem) interface can communicate at data rates up to 38.4K bps. The AUX (auxiliary printer) interface is unidirectional and can communicate at data rates up to 19.2K bps.

ENVIRONMENTAL CONSIDERATIONS

The terminal can be placed on a table, desktop, or any other vibration-free horizontal surface free from lint and dust. Abnormally bright room light or direct sunlight from a window can interfere with the display.

Figure 1-4 shows the terminal's dimensions. The user should allow three inches of clearance on all sides when installing the terminal, to allow air circulation and room for the tilt and swivel mechanism.

Figure 1-4 Terminal Dimensions

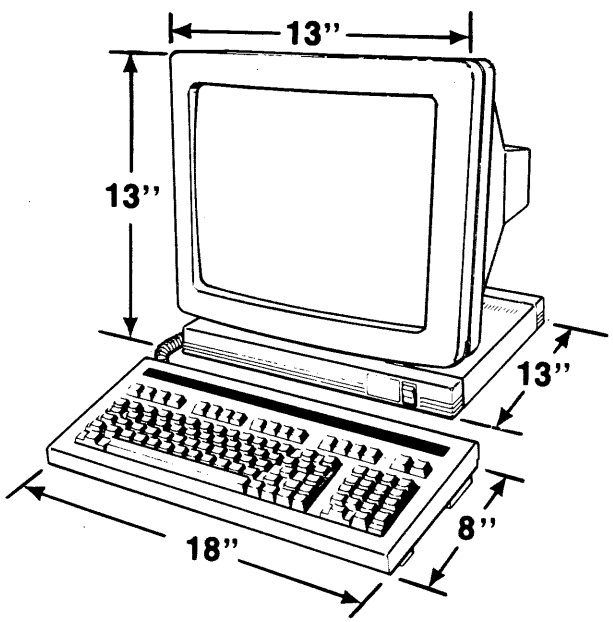

You can install the terminal next to most other types of electrical or electronic equipment without serious interference. Avoid locations near strong magnetic fields that can distort and interfere with the operation or servicing of the video display.

Ambient room temperature should never exceed 45 degrees Celsius (113 degrees Fahrenheit) when the terminal is on. No special cooling is necessary. Make sure the rear of the terminal has a free flow of air. Don't set it on sound-deadening devices that impede the intake of cooling air underneath it.

OPERATOR CONTROLS

Figure 1-5 shows all operator controls, including the keyboard, power, and external brightness. It also points out the MODEM and AUX communication connectors.

Figure 1-5 Operator Controls

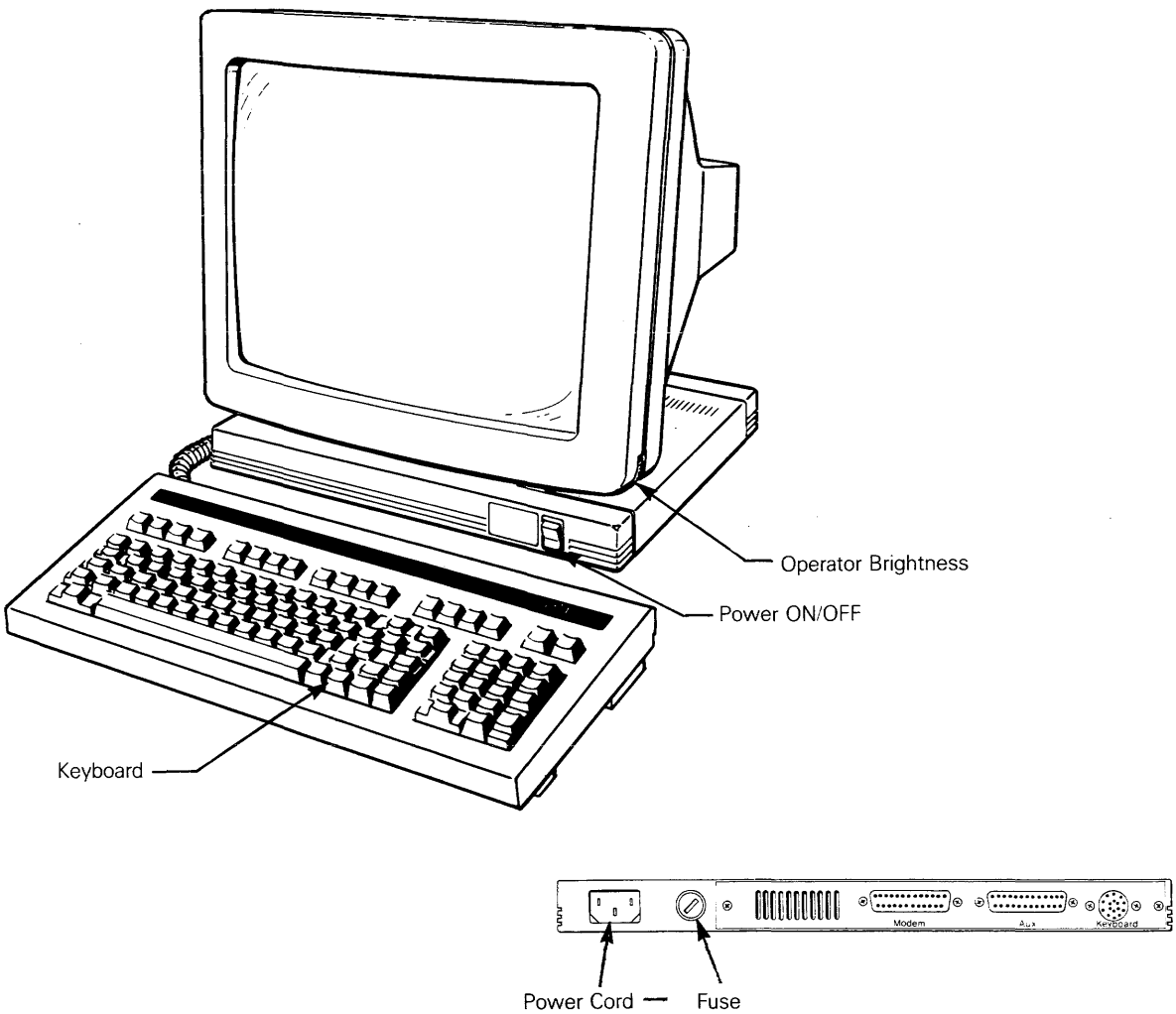

Keyboard

Plug the keyboard into the keyboard connector on the rear panel. This plug fits only one way. Avoid unplugging or plugging in the keyboard when the power is on: you could damage the keyboard, the microprocessor board, or both.

CAUTION--Compare the voltage specified on the configuration label (on the back of the CRT enclosure) with the AC power source to prevent damaging the terminal.

Power Cord

You should insert the power cord into the connector on the rear panel. Then plug it into a grounded three-prong AC power source. The AC plug is keyed so it can't be inserted the wrong way.

Communications Cable

Connect the communications cable from the terminal or modem to the communications connector labeled MODEM. This port defaults to 9600 baud, no parity, with one stop bit and eight data bits. The operator can change these parameters by going into setup mode.

Connect the serial printer (if applicable) to the connector on the rear panel labeled AUX. This port is configured to operate at the same baud, parity, stop bit, and data bit as the MODEM port (the AUX port will operate up to 19.2K bps, the MODEM port will operate up to 38.4K bps). You can change these parameters by going into setup mode.

Fuse

The line fuse is located to the right of the power cord receptacle. Both domestic and international versions of the terminal require a standard fuse, 250 volts, 2 amperes. You can find instructions about changing it in "Removal and Replacement," Chapter 2.

Power Switch

The power switch is on the right of the console pedestal. Pressing the top of the switch turns AC power ON.

Brightness Control

The brightness control is a thumbwheel located on the lower right-hand corner of the CRT bezel. Rotating the wheel

clockwise increases the display brightness. Rotating it counterclockwise decreases the brightness.

SETUP PARAMETERS

When you turn the power on, the terminal beeps and executes an internal self-test. When the self-test finishes and the CRT is warm (approximately 30 seconds), the cursor appears in the upper left-hand corner of the display. The unit is now ready for operation based on the setup parameters.

To inspect the parameters, press SHIFT while simultaneously pressing SETUP. The first level of parameters appears across the bottom of the screen. To examine the other four levels of parameters, press ▼ key. Each time you press this key, you can see another level. Change parameters with this procedure:

1. Enter the setup mode by pressing SHIFT and SETUP simultaneously.

2. Press ▼ key until the parameter to be changed is displayed on the bottom row of the screen.

3. Press ► key until the specific parameter to be changed is highlighted.

4. Press the spacebar to advance the parameter to the specific setting desired.

5. Press the cursor keys to advance to the next parameter to be changed.

6. To leave the setup mode, press SHIFT and SETUP simultaneously.

   The status line flashes a message asking if the changed parameters should be saved for power-on. Parameter changes not saved are implemented immediately. The next time the terminal is turned on, any parameters established **before** the unsaved changes will be the parameters under which it operates.

   Pressing Y saves the parameters keyed in but does not alter any of the function key definitions.

   Pressing A saves all changes made (maximum, four bytes per function key).

7. To return to a normal operation mode, press any key.

   The terminal is now operational using the parameters defined in the setup mode.

   To get back to the power-on default parameters without

cycling the power, press ESC while in the setup mode.

See the WY-50 Reference Manual for more comprehensive setup instructions.

CLEANING

The terminal needs an occasional cleaning. The screen should be cleaned with a soft, lint-free cloth. Don't ever use chemical substances, abrasives, or commercial glass cleaners that contain alcohol or ammonia to clean the screen. (Apply the cleaner to the cloth, not directly to the screen.)

2 REMOVING AND REPLACING COMPONENTS

MODULES

This chapter describes how to remove and install each module. For purposes of orientation, FRONT is the monitor face, BACK is the rear panel and power cord location (see Figure 2-2).

The terminal consists of these four major modules (see Figure 2-1):

Module Name	
o Monitor/Power Supply	The monitor/power supply performs two major functions: it converts AC input voltage to the required DC voltages (+5V, +12V, -12V, -23V, and +24.5V) and it amplifies and displays horizontal, vertical, and video signals on the CRT screen.
o Keyboard	The keyboard is a scanned matrix. When the user presses a key, the keyboard flags the CPU to generate the appropriate key code. The CPU also debounces keys.
o Microprocessor PCB	The microprocessor PCB generates video and output signals. All control logic is on this PCB.
o CRT/Yoke Assembly	The CRT/yoke assembly contains both the cathode ray tube and the yoke that deflects the electron beam.

Figure 2-1 Four Major Modules

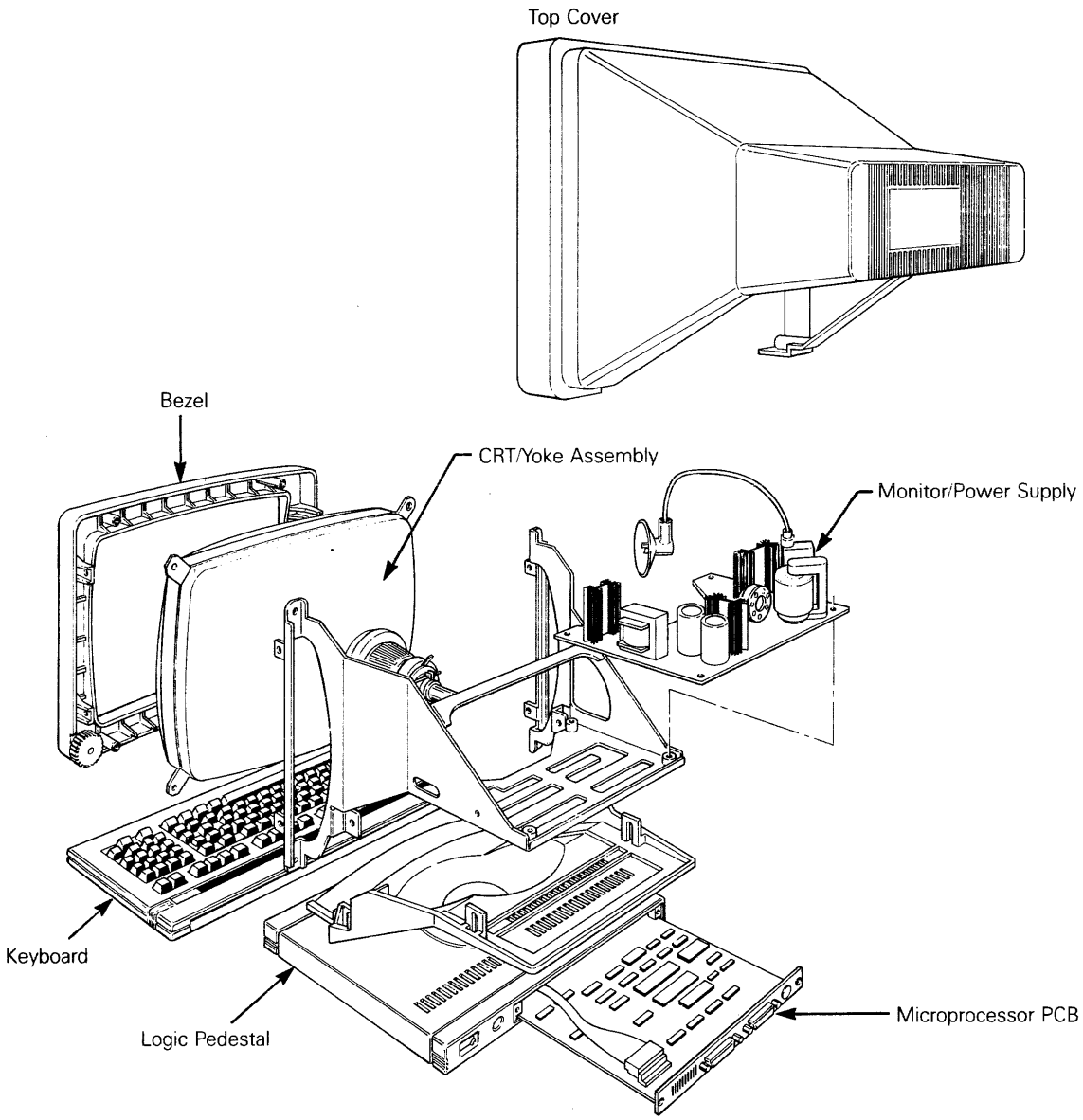

All modules within the terminal can be removed for repair or replacement by the service technician without any special tools.

Figure 2-2 Orientation View of Terminal and Components

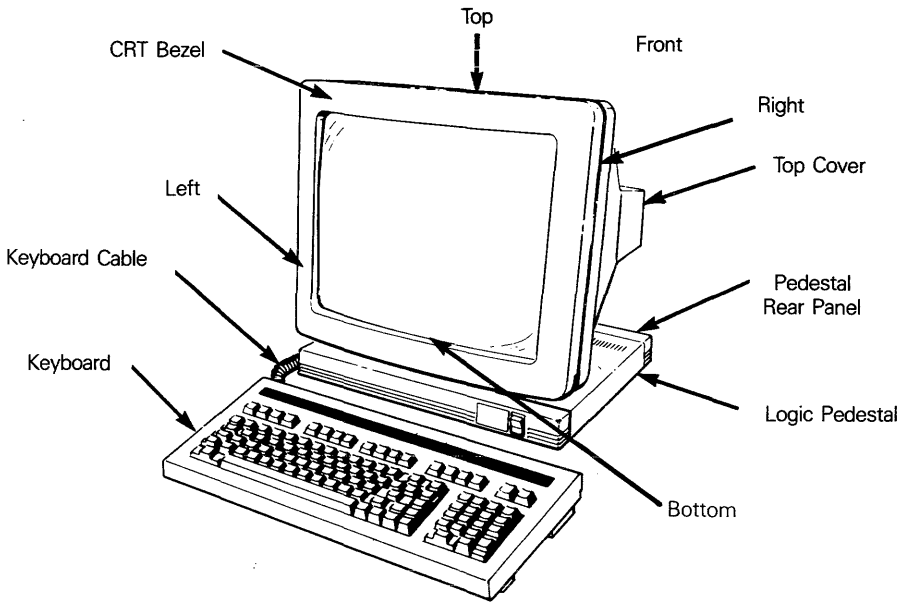

WARNING--There are high voltages present. Only qualified service technicians should open up the terminal housing.

The following paragraphs describe removal and replacement procedures for these components and modules:

- Fuse
- Keyboard
- Keyboard cable
- Keyboard PCB
- Monitor/power supply PCB
- CRT/yoke assembly
- External brightness potentiometer (operator control)
- AC power switch
- Microprocessor PCB

If you have the materials and tools listed here, you will be prepared to remove and replace any of the parts or assemblies in this chapter.

Materials:

Standard fuse, 250 volts, 2 amperes
Tie wraps

Required Tools:

Insulated slotted screwdriver, 12"

No. 1 Phillips screwdriver, 12"
No. 2 Phillips screwdriver

Recommended Tools:
Ohmmeter
Shorting stick

FUSE REPLACEMENT

Tools Required:
Slotted screwdriver
Standard fuse, 250 volts, 2 amperes
Ohmmeter (recommended)

Figure 2-3 Line Fuse Location

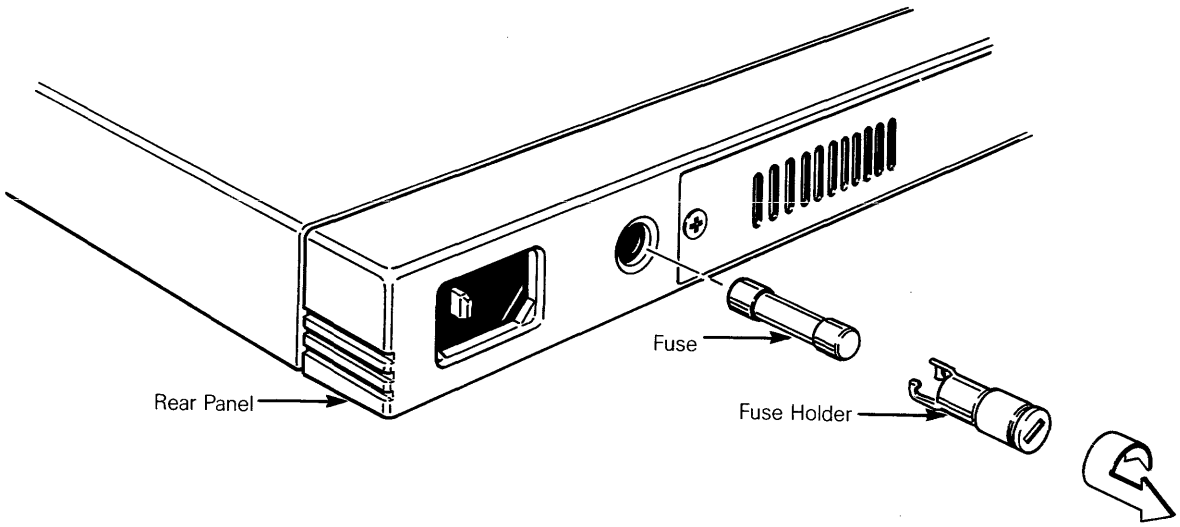

1. Disconnect the terminal from its power source.

2. Push the fuse holder in with a slotted screwdriver. Twist it counterclockwise until it releases.

3. Inspect the fuse. If it is broken or blackened, replace it with a new fuse in the fuse holder. (Check continuity of the new fuse with an ohmmeter.)

4. Push the fuse holder and new fuse back into the fuse socket with a slotted screwdriver. Twist the fuse holder clockwise until it locks in place.

KEYBOARD REPLACEMENT

Tools Required:
None

Figure 2-4 Keyboard Assembly

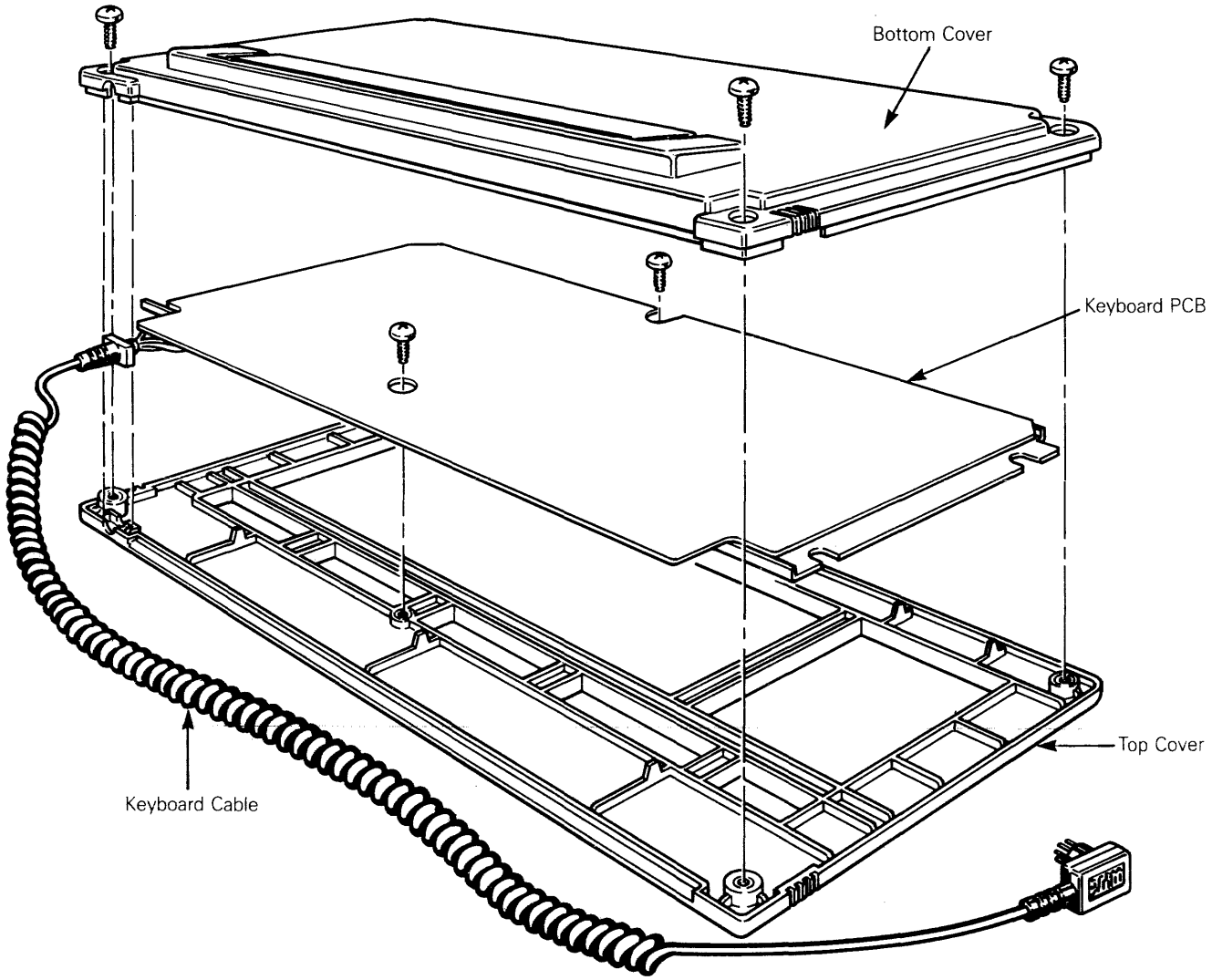

1. Disconnect the terminal from its AC power source.

2. Unplug the keyboard cable from the keyboard connector at the rear panel.

3. Plug the new keyboard into the rear panel.

KEYBOARD CABLE REPLACEMENT

Tools Required:
No. 2 Phillips screwdriver

See Figure 2-4.

This is the procedure to replace the keyboard cable:

1. Disconnect the terminal from its AC power source.

2. Unplug the keyboard cable from the rear panel.

3. Turn the keyboard over and remove the four No. 2 Phillips head screws holding the keyboard bottom cover (one screw in each corner).

4. Lift the keyboard bottom cover off of the keyboard assembly.

5. Remove the two No. 2 Phillips head screws holding the keyboard top cover to the metal frame and PCB assembly. Lift the PCB assembly out of the keyboard.

6. Unscrew the No. 1 Phillips screw holding the keyboard cables shielded grounding strap to the keyboard.

7. Unplug the keyboard cable from the keyboard.

8. Connect the new keyboard cable to the connector on the PCB. Reconnect the grounding strap. (A few older keyboards do not have compatible connectors. You may have to replace both the cable and the PCB.)

9. Fit the keyboard PCB assembly back into the keyboard top cover. Make sure that the cable fits properly through the edge of the keyboard assembly, then replace the two No. 2 Phillips head screws that hold the PCB in place.

10. Reattach the rear cover of the keyboard assembly.

KEYBOARD PCB REPLACEMENT

Tools Required:
No. 2 Phillips screwdriver

See Figure 2-4.

This is the procedure to replace the keyboard PCB:

1. Disconnect the terminal from its AC power source.

2. Unplug the keyboard cable from the rear panel.

3. Turn the keyboard over and remove the four No. 2 Phillips head screws holding on the keyboard bottom cover (one screw in each corner) to the keyboard assembly.

4. Lift the keyboard bottom cover off of the keyboard assembly.

5. Remove the two No. 2 Phillips head screws holding the keyboard top cover to the metal frame and PCB assembly. Lift the PCB assembly out of the keyboard.

6. Unscrew the No. 1 Phillips screw holding the keyboard cables shielded grounding strap to the keyboard.

7. Unplug the keyboard cable from the keyboard.

8. Connect the keyboard cable to the keyboard connector on the new PCB. Reconnect the grounding strap.

9. Fit the keyboard PCB assembly back into the keyboard top cover. Make sure that the cable fits properly through the edge of the keyboard assembly, then replace the two No. 2 Phillips head screws that hold the PCB in place.

10. Reattach the bottom cover of the keyboard assembly.

TOP COVER REPLACEMENT

Tools Required:
No. 1 Phillips screwdriver, 12"

This is the procedure to remove and replace the top cover:

1. Turn the terminal off. Disconnect it from its AC power source.

2. Remove four No. 1 screws holding the top cover in place (one behind each of the four corners of the bezel).

3. Lift the cover up and away from the terminal.

4. Replacement is the reverse order of removal.

REPLACING THE MONITOR/POWER SUPPLY PCB

Tools Required:
No. 1 Phillips screwdriver, 12"
Insulated slotted screwdriver, 12"

See Figure 2-5.

CAUTION--High voltage is present. Only qualified service personnel should service the terminal.

Changing Power Requirements on the Terminal

The terminal operates at either 115 VAC, 60 Hz, or 230 VAC, 50 Hz. The operating voltage is controlled by a jumper located on

the monitor/power supply logic card. Look at Figure 2-5 for the jumper location.

Before you change the monitor/power supply PCB, make sure the power on the new PCB is strapped correctly.

Here is the procedure to strap the power for 115 VAC (domestic):

1. Connect the crimp-on connector with the black wire to the pin marked 115 on the monitor/power supply PCB (see Figure 2-5).

2. Connect the crimp-on connector with no wire, to the pin marked 230 on the monitor/power supply PCB.

Figure 2-5 Monitor/Power Supply and Chassis

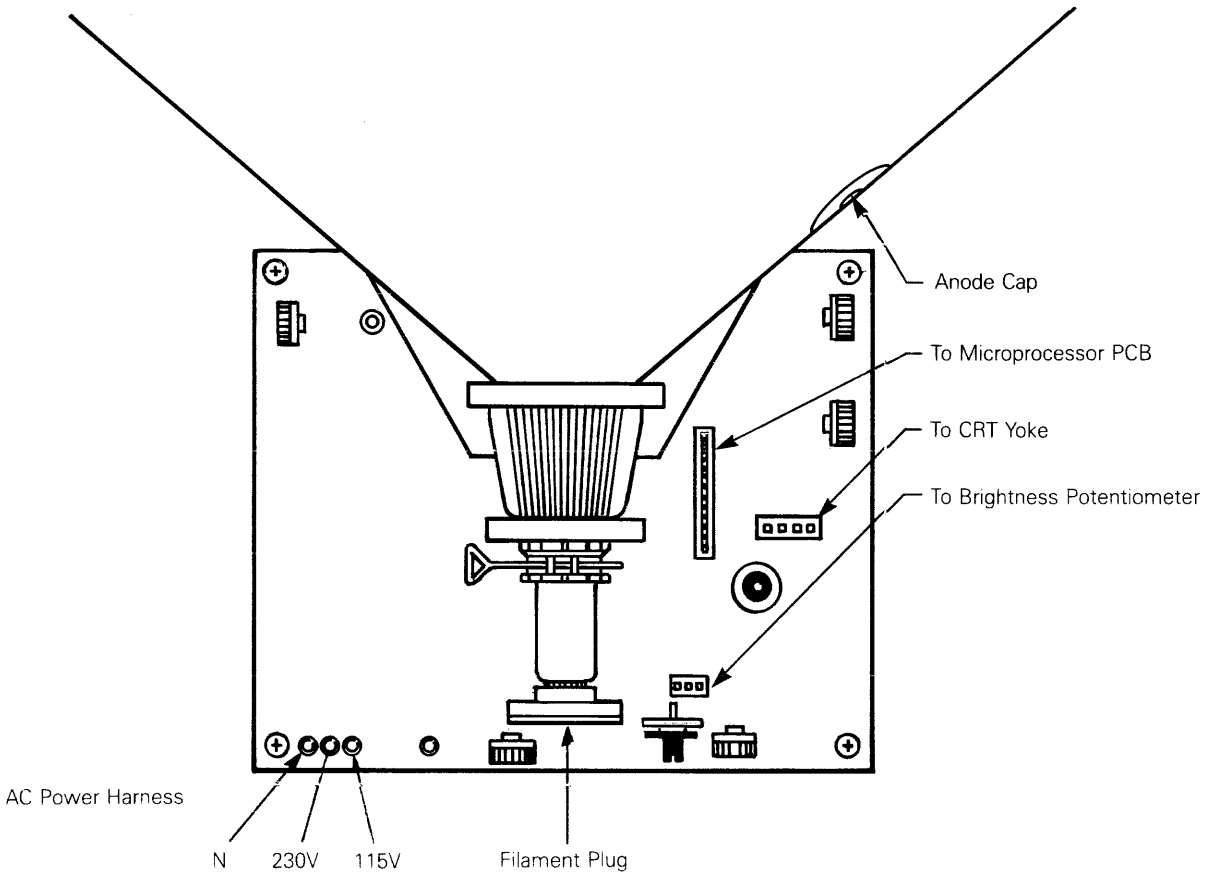

Here is the procedure to strap the power for 230 VAC (international):

1. Connect the crimp-on connector with the black wire to the pin marked 230 on the monitor/power supply PCB (see Figure 2-5).

2. Connect the crimp-on connector with no wire, to the pin marked 115 on the monitor/power supply PCB.

This is the procedure to remove and replace the monitor/power supply:

WARNING--High voltage is present. Do not touch the CRT or CRT anode unless you are a qualified service technician.

1. Disconnect the terminal from its AC power source.

2. Remove the four No. 1 Phillips screws holding the CRT cover in place (one screw in each corner).

3. Hold the CRT cover by both ends and pull it off.

4. Disconnect the microprocessor PCB wiring harness.

5. Ground the shaft of the slotted screwdriver on the metal chassis of the terminal. Slip the blade of the screwdriver under the anode cap. Discharge the CRT anode with an insulated slotted screwdriver.

6. Disconnect the brightness pot wiring harness (Figure 2-5).

7. Disconnect the AC power harness (Figure 2-5).

8. Disconnect the filament plug from the neck of the CRT.

9. Disconnect the yoke wiring harness plug.

10. Disconnect the anode cap from the CRT.

11. Remove the four Phillips screws that hold the monitor/power supply PCB to the CRT frame (one in each corner).

12. Slide the PC board out the rear of the CRT frame.

CAUTION--Before you reattach the anode cap to the CRT or the microprocessor PCB wiring harness to the monitor/power supply assembly, discharge the CRT anode again. Because of the capacitive coating inside the CRT, it can recharge itself. The terminal has a common ground. If there is a residual charge and the microprocessor PCB wiring harness is reconnected, it may damage components on that PCB.

13. Install the monitor/power supply PCB in reverse order from removal.

14. When you replace the monitor/power supply PCB, realign the CRT. See "Theory of Operations," Chapter 6 for alignment information.

CRT/YOKE ASSEMBLY REPLACEMENT

Tools Required:
No. 1 Phillips screwdriver, 12"
Slotted screwdriver, 12"

Figure 2-6 CRT/Yoke Assembly

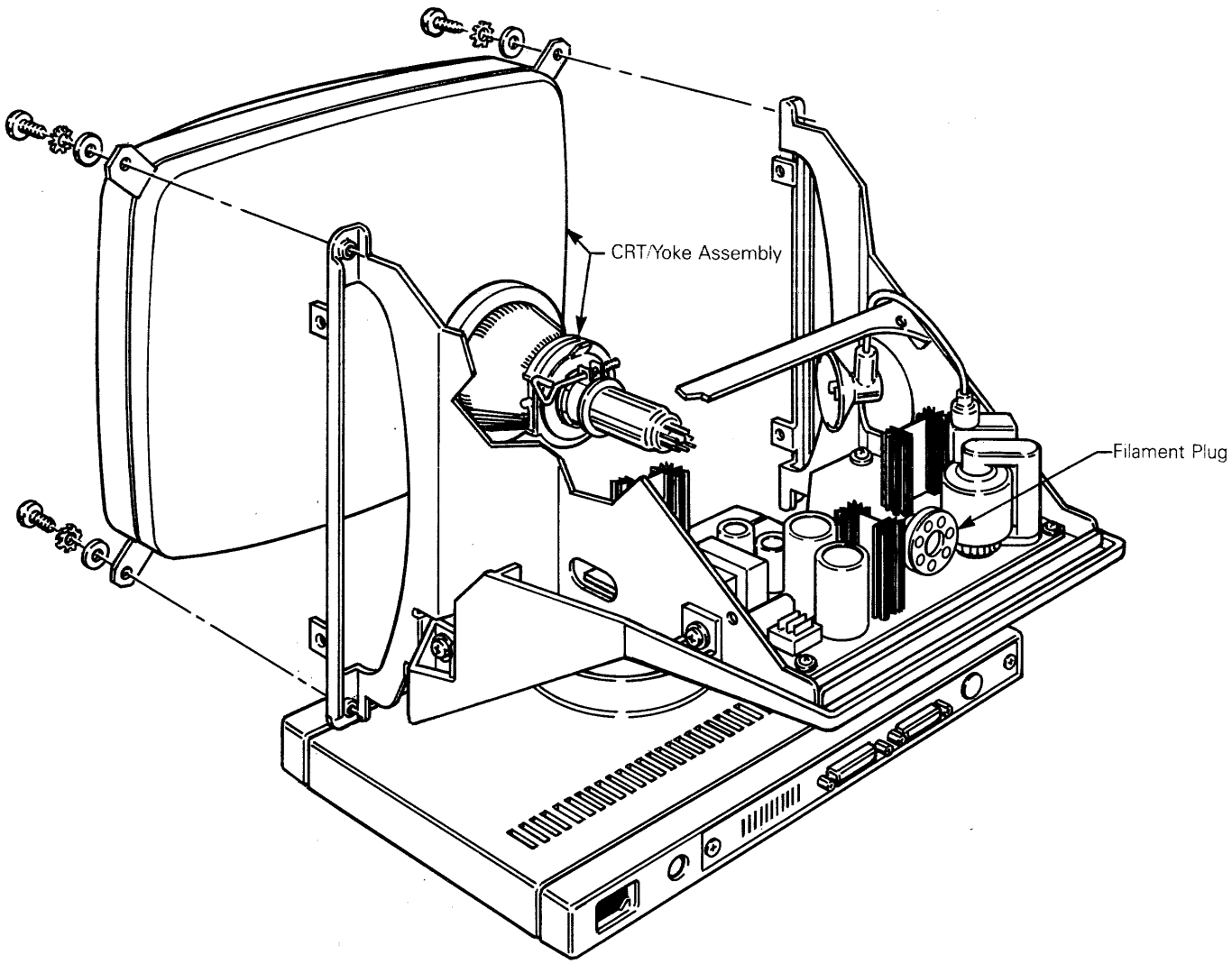

WARNING--High voltage is present. Only qualified service personnel should service this device.

This is the procedure for replacing the CRT/yoke assembly:

1. Disconnect the terminal from its AC power source.

2. Remove the four Phillips screws that hold the CRT cover in place (one screw in each corner).

3. Hold the CRT cover by both ends and pull it off.

4. Discharge the CRT anode with an insulated standard screwdriver.

5. Disconnect the anode cap from the CRT.

6. Disconnect the filament plug from the neck of the CRT.

7. Disconnect the yoke wiring harness plug.

8. Disconnect the microprocessor PCB wiring harness.

WARNING--High voltage is present. Do not touch the CRT or CRT anode unless you are a qualified service technician.

9. Remove the four Phillips screws that hold the bezel to the CRT. Remove the bezel.

WARNING--When you hold the CRT, make sure the screen faces the floor and the neck faces the ceiling. Don't bend over the CRT. If it implodes, the neck will shoot through the CRT screen. If the neck breaks off, it could fly in your face.

10. Remove the four Phillips screws, and assorted hardware at each corner of the CRT face that hold the front of the CRT/yoke assembly in the chassis.

11. Remove the CRT/yoke assembly from the chassis.

CAUTION--Before you reattach the anode cap to the CRT or the microprocessor PCB wiring harness to the monitor/power supply assembly, discharge the CRT anode again. Because of the capacitive coating inside the CRT, it may recharge itself. The terminal has a common ground. If there is a residual charge and the microprocessor PCB wiring harness is reconnected, it may damage components on that PCB.

12. Install the CRT/yoke assembly in the reverse order from removal.

13. When you replace the monitor/power supply PCB, you must realign the CRT. See "Theory of Operations," Chapter 6 for alignment information.

BRIGHTNESS POTENTIOMETER REPLACEMENT

Tools Required:
No. 1 Phillips screwdriver, 12"
Tie wraps

Figure 2-7 Operator Brightness Potentiometer

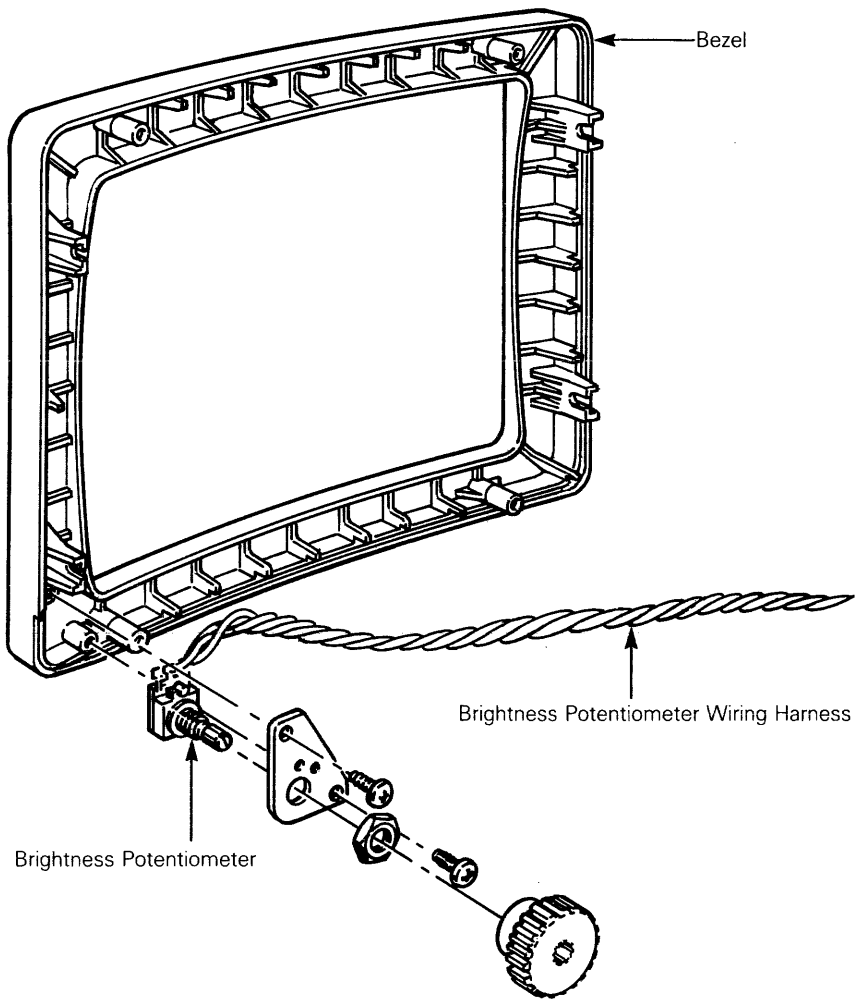

1. Disconnect the terminal from its AC power source.
2. Remove four No. 1 Phillips screws holding the CRT cover in place.
3. Hold the CRT cover by both ends and pull it off.
4. Disconnect the brightness potentiometer wiring harness from the monitor/power supply PCB.

5. Clip the tie wraps holding the brightness potentiometer harness to the chassis.

6. Remove four No. 2 Phillips screws that hold the CRT bezel.

7. Remove the bezel.

8. Remove two No. 1 Phillips screws that hold the brightness potentiometer to the bezel.

9. Install the new potentiometer.

10. Assemble the CRT in the reverse order from disassembly.

AC POWER SWITCH REPLACEMENT

Tools Required:
No. 1 Phillips screwdriver
Tie wraps

Figure 2-8 AC Power Switch Removal

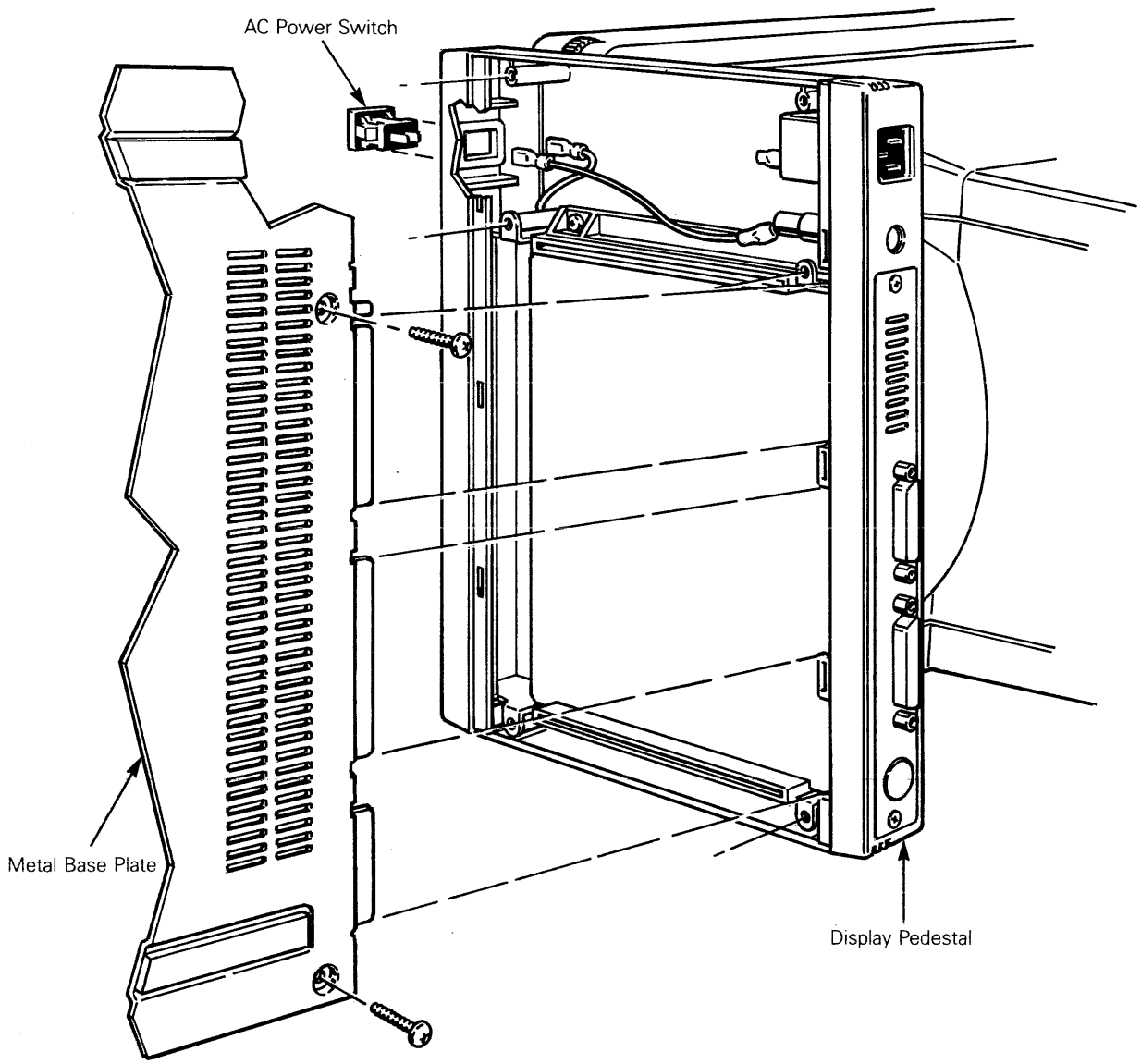

1. Disconnect the terminal from its AC power source.
2. Lay the terminal on its side.
3. Remove six No. 1 Phillips screws that hold the metal base plate to the display pedestal.
4. Lift the metal base plate free.

CAUTION--The metal base plate tabs can break the display console plastic if they aren't handled carefully.

5. Disconnect the slip-on connectors from the rear of the switch.

6. Push the power switch out of the front of the display pedestal. This is a snap-in switch; you may have to squeeze the snaps to remove it.

7. Install the new switch.

8. Assemble in the reverse order from disassembly.

MICROPROCESSOR PCB REPLACEMENT

Tools required:
No. 1 Phillips screwdriver

See Figure 2-9.

1. Disconnect the terminal from its AC power source.

2. Disconnect the keyboard from the rear panel.

Figure 2-9 Microprocessor PCB Removal

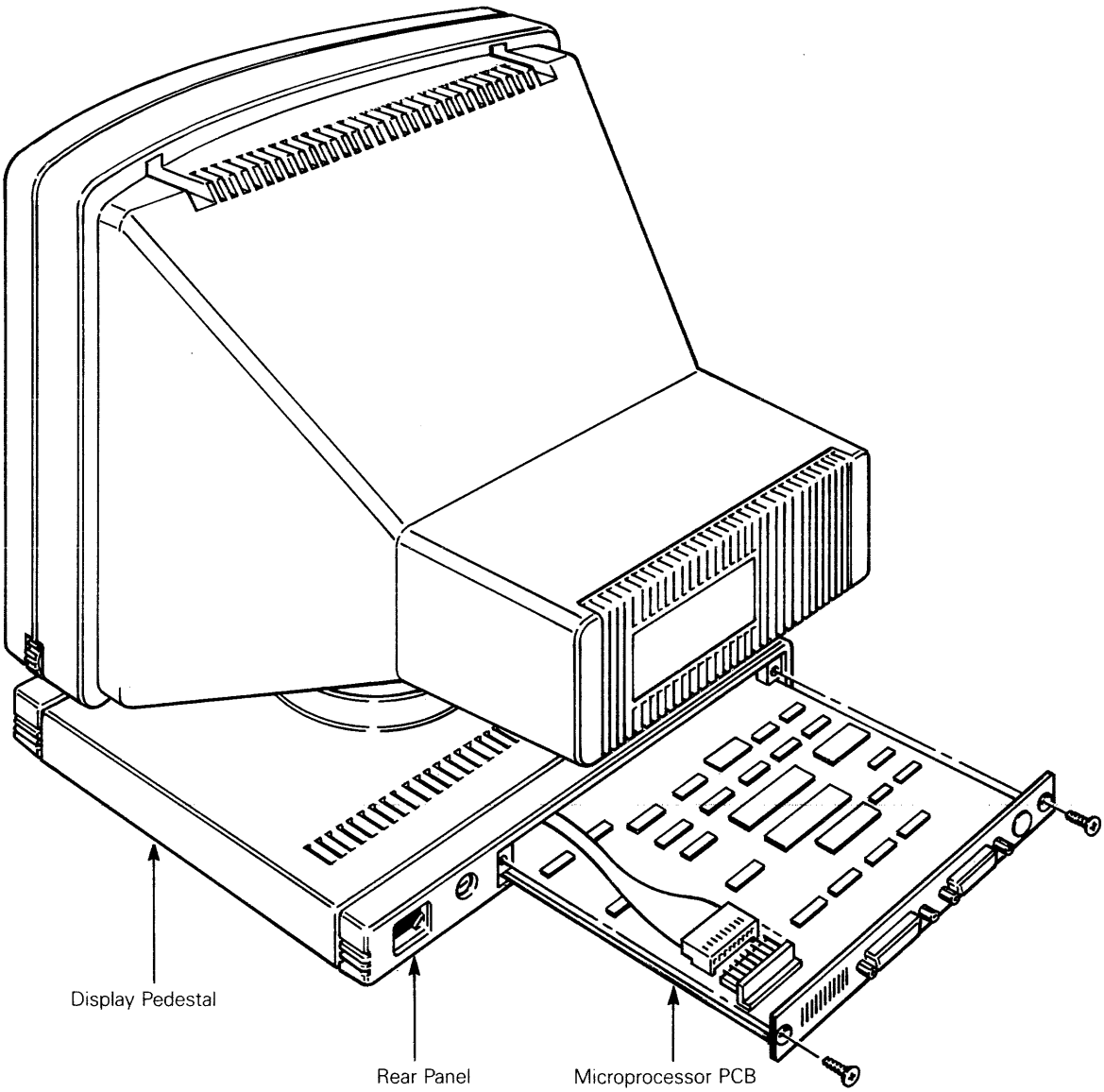

3. Disconnect the printer and modem communications cables.

4. Remove two No. 1 Phillips screws holding the rear panel in place on the display pedestal.

5. Pull the rear panel 2 inches out of the unit.

6. Disconnect the monitor/power supply cable from the microprocessor PCB (Figure 2-9).

7. Remove the microprocessor PCB.

8. Install the new microprocessor PCB.

9. Assemble in the reverse order of disassembly.

3 TROUBLESHOOTING

INTRODUCTION

This terminal is easy to troubleshoot. Chapter 3 describes its self-test, diagnostics, and hardware problems. It also explains how to fix problems at the board level.

POWER-ON SELF-TEST

Note--Self-test returns the terminal to default values.

The power-on self-test checks the terminal's RAM, CPU, and EAROM. The RAM test is a Write/Read test that checks all 4K of RAM. The CPU test checks 128 bytes of RAM in the CPU as well as the data and address lines. The EAROM test calculates the EAROM's checksum and compares it to the checksum bit stored in the ROM.

Each time a user turns the terminal on, the power-on self-test executes. If the test detects an error, an error message appears in the lower right-hand corner of the display. Table 3-1 defines these error messages. If any of these messages do appear, replace the microprocessor board.

Table 3-1 Error Message Definitions

Error Message	IC Location	Definition
0	1E	RAM failure in the first 2K block
1	1D	RAM failure in the second 2K block
P	1J	Control PROM error
R	3F or 1C	Display row buffer error
9	6J (TTL PCB) 5J (Gate Array PCB)	EAROM checksum error
X	NA	MODEM port error
Y	NA	AUX port error
Z	3K	CPU failure

DIAGNOSTIC SELF-TEST

The you can start the terminal diagnostic self-test routine in setup. This test routine includes the power-on self-test and the telecommunications circuitry tests. Two special jumpers allow the communications test to function (see Figure 3-1 for jumper definitions). After you start it, the diagnostic test continues to run until you stop it. If the test detects an error, an error message appears in the lower right-hand corner of the CRT (see Table 3-1 for error message definitions).

Follow these steps to start the diagnostic self-test:

1. Plug in the terminal.
2. Install a test jumper on both the AUX and MODEM ports.
3. Turn the power switch ON.
4. Hold down SHIFT, then press SETUP.
5. Press ESC. This returns the terminal to default parameters.
6. Press ▼ key until the TEST parameter appears on the bottom row of the screen.
7. Press ► key until the cursor highlights the TEST parameter field.
8. Press the spacebar. This toggles the TEST parameter field to ON.
9. Start the self-test by holding SHIFT, while you press the SETUP and y keys. The test runs until you stop it.
10. To stop the self-test, hold down SHIFT, then press SETUP again, then remove the jumpers.

Figure 3-1 Test Jumper

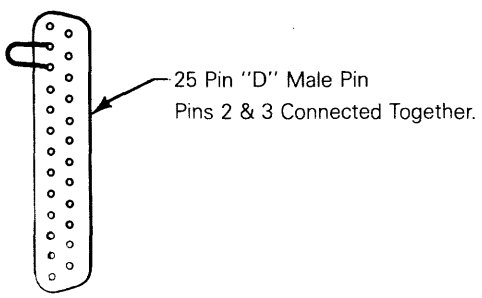

TROUBLESHOOTING

This section contains the troubleshooting flowchart, a power supply quick-reference procedure, a procedure to check the horizontal-synchronization signal, and a vertical-hold procedure for revision A monitor/power supply PCBs.

Troubleshooting Flowchart

The troubleshooting flowchart can help you locate faulty modules. Start at the beginning, and follow the questions in the decision boxes. If any step requires a special procedure, you can find a reference number next to the block. We have keyed the reference numbers that appear in the flowchart to the legend at the bottom of the page. If the flowchart doesn't cover the symptoms the terminal shows, look at "Theory of Operations," Chapter 6 and Appendix C, "Schematics."

Figure 3-2 Troubleshooting Flowchart

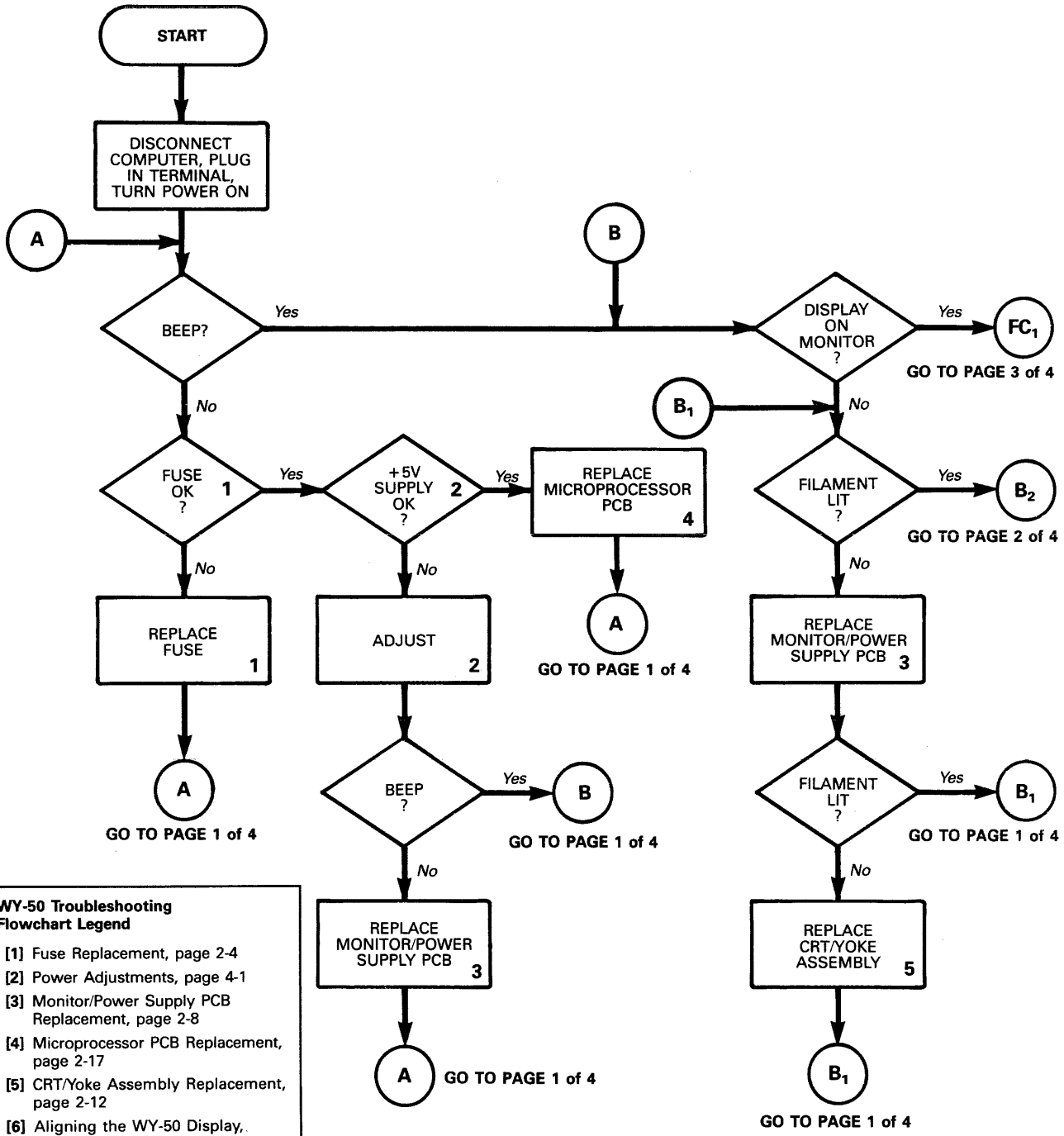

WY-50 Troubleshooting Flowchart Legend

- **[1]** Fuse Replacement, page 2-4
- **[2]** Power Adjustments, page 4-1
- **[3]** Monitor/Power Supply PCB Replacement, page 2-8
- **[4]** Microprocessor PCB Replacement, page 2-17
- **[5]** CRT/Yoke Assembly Replacement, page 2-12
- **[6]** Aligning the WY-50 Display, page 4-4
- **[7]** Brightness Potentiometer Replacement, page 2-14
- **[8]** Power Supply Check from the Microprocessor PCB, page 3-8
- **[9]** Checking Horizontal Synchronization, page 3-9
- **[10]** Adjusting Vertical Hold, page 3-9
- **[11]** Power-On Self-Test, page 3-1
- **[12]** Diagnostic Self-Test, page 3-2
- **[13]** Display Alignments and Adjustments, page 4-1
- **[14]** Keyboard Replacement, page 2-5

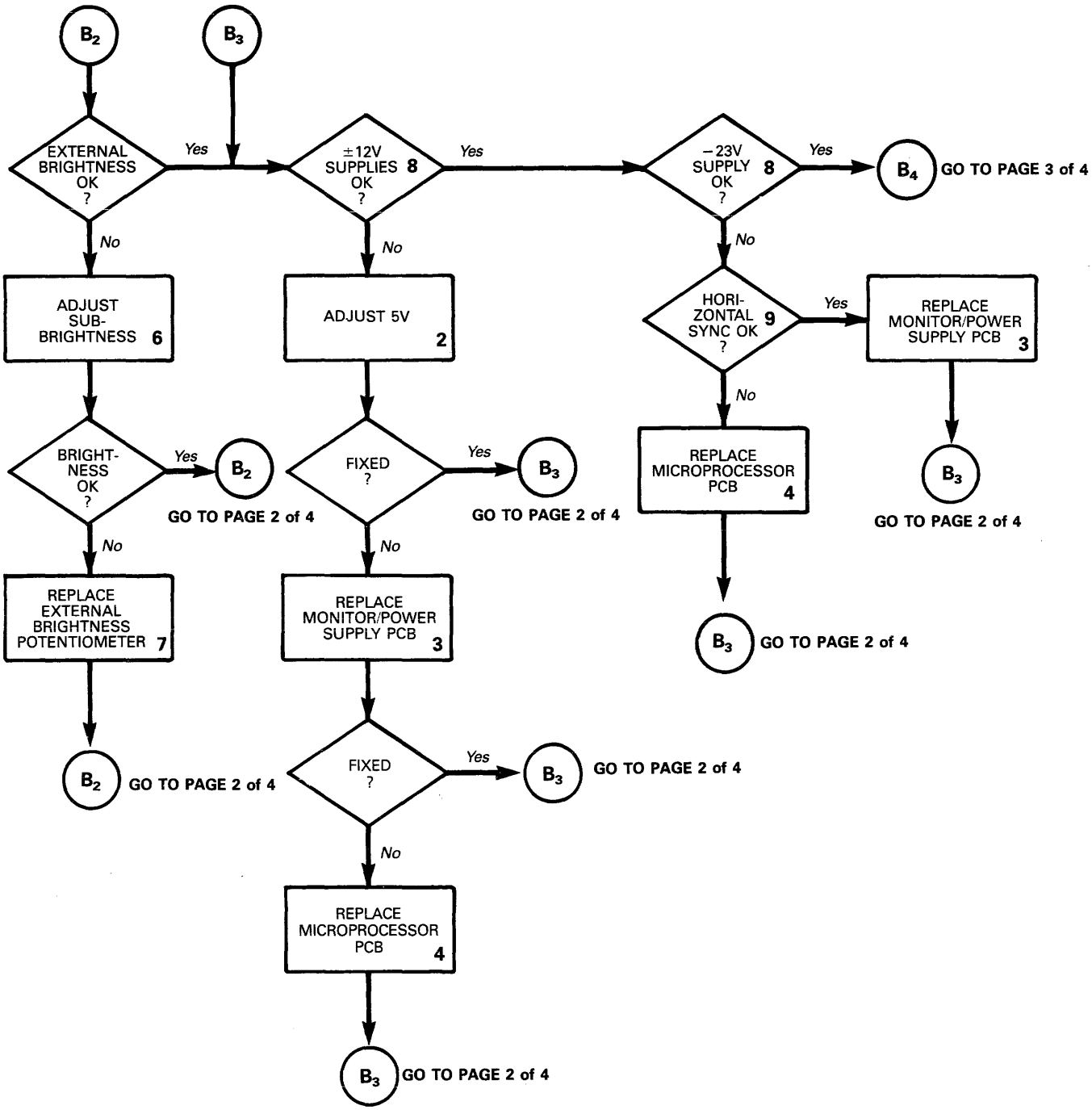
B2
B3
EXTERNAL BRIGHTNESS OK ?
Yes
No
±12V SUPPLIES OK ? 8
Yes
No
−23V SUPPLY OK ? 8
Yes
B4
GO TO PAGE 3 of 4
No
ADJUST SUB-BRIGHTNESS 6
ADJUST 5V 2
HORI-ZONTAL SYNC OK ? 9
Yes
REPLACE MONITOR/POWER SUPPLY PCB 3
No
BRIGHT-NESS OK ?
Yes
B2
GO TO PAGE 2 of 4
FIXED ?
Yes
B3
GO TO PAGE 2 of 4
REPLACE MICROPROCESSOR PCB 4
B3
GO TO PAGE 2 of 4
No
No
No
REPLACE EXTERNAL BRIGHTNESS POTENTIOMETER 7
REPLACE MONITOR/POWER SUPPLY PCB 3
B2
GO TO PAGE 2 of 4
FIXED ?
Yes
B3
GO TO PAGE 2 of 4
No
REPLACE MICROPROCESSOR PCB 4
B3
GO TO PAGE 2 of 4

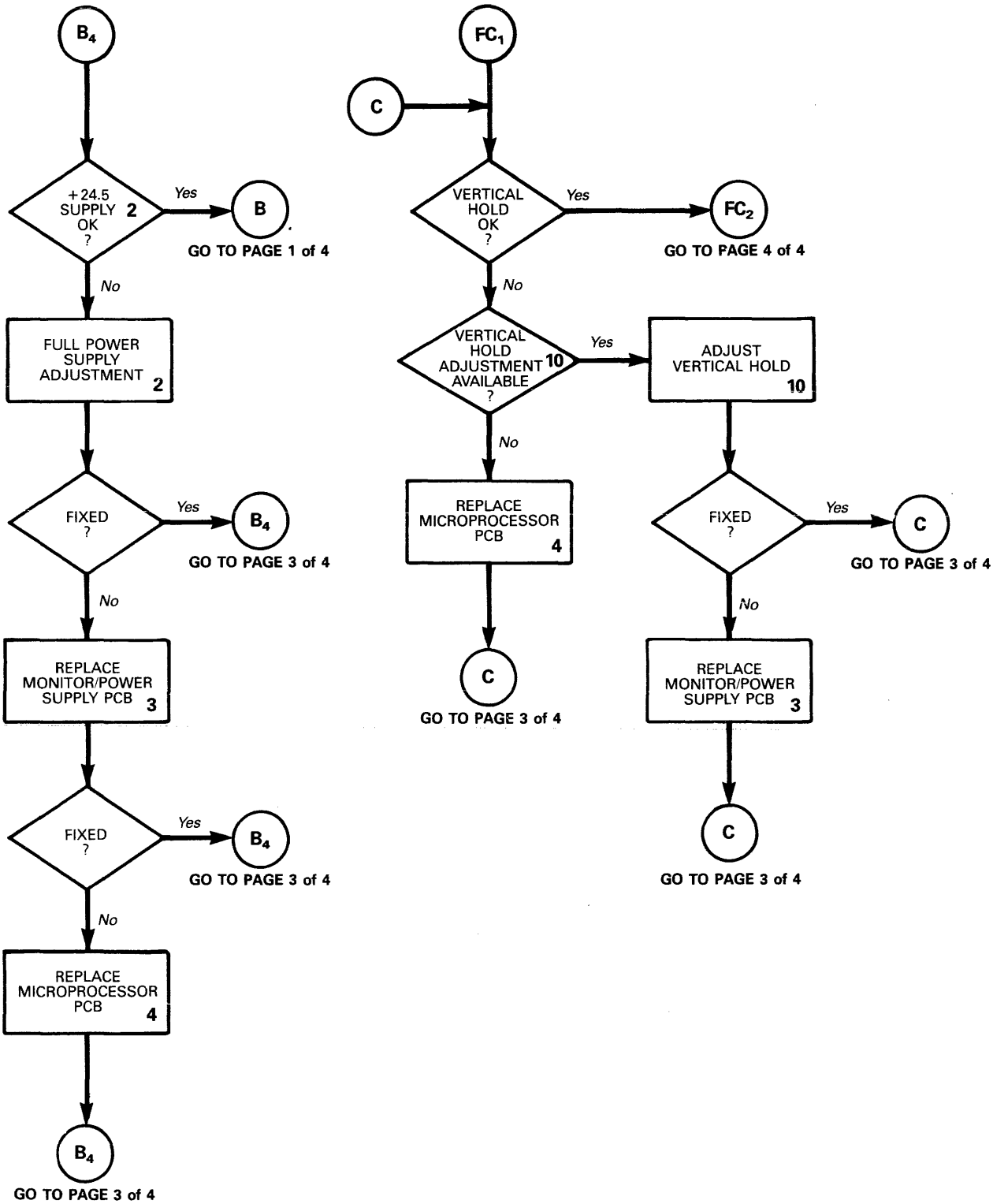
B4
+24.5 SUPPLY OK ? 2
Yes
B
GO TO PAGE 1 of 4
No
FULL POWER SUPPLY ADJUSTMENT 2
FIXED ?
Yes
B4
GO TO PAGE 3 of 4
No
REPLACE MONITOR/POWER SUPPLY PCB 3
FIXED ?
Yes
B4
GO TO PAGE 3 of 4
No
REPLACE MICROPROCESSOR PCB 4
B4
GO TO PAGE 3 of 4
FC1
C
VERTICAL HOLD OK ?
Yes
FC2
GO TO PAGE 4 of 4
No
VERTICAL HOLD ADJUSTMENT AVAILABLE ? 10
Yes
ADJUST VERTICAL HOLD 10
No
REPLACE MICROPROCESSOR PCB 4
C
GO TO PAGE 3 of 4
FIXED ?
Yes
C
GO TO PAGE 3 of 4
No
REPLACE MONITOR/POWER SUPPLY PCB 3
C
GO TO PAGE 3 of 4

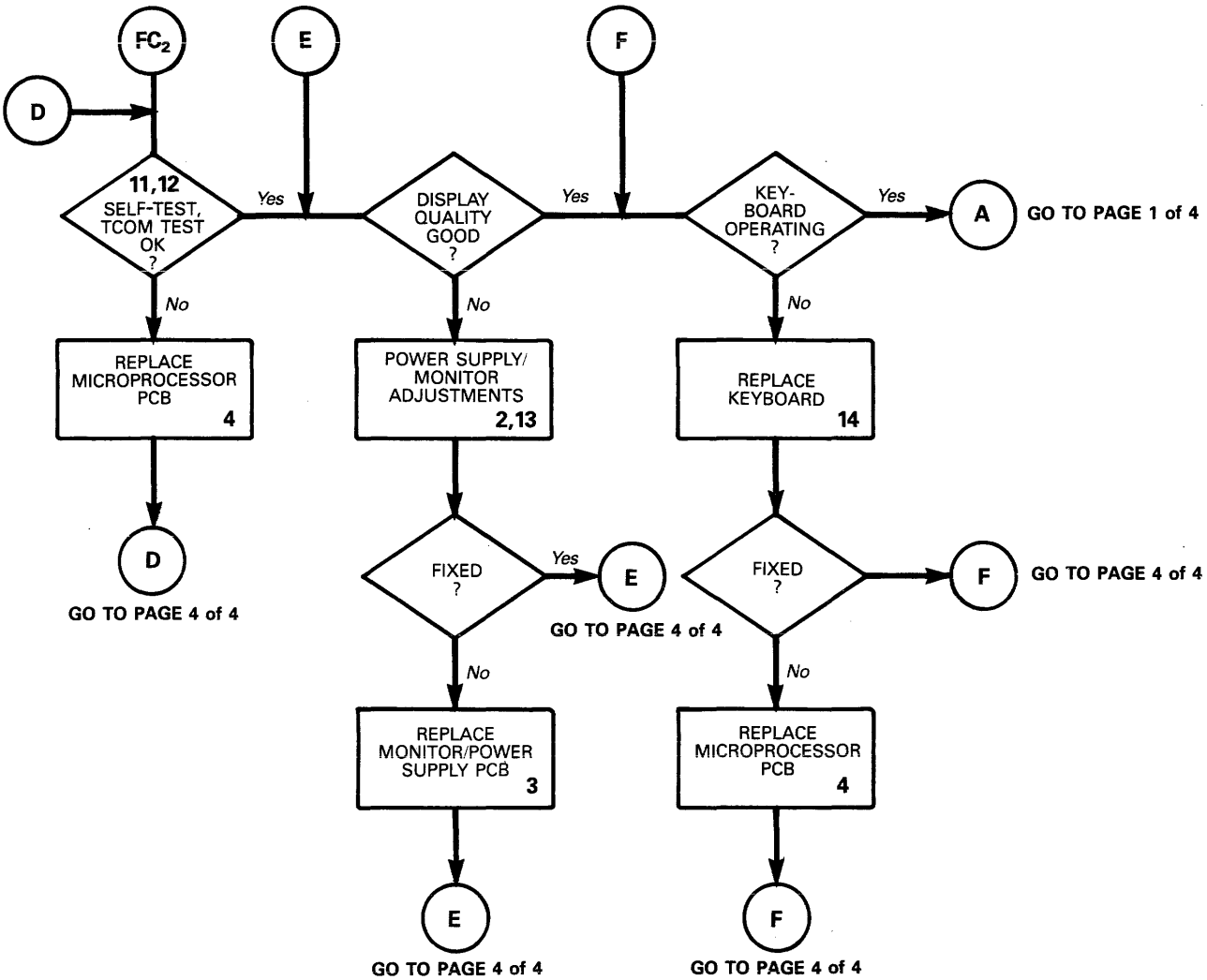
FC2
E
F
D
11,12
SELF-TEST, TCOM TEST OK ?
Yes
DISPLAY QUALITY GOOD ?
Yes
KEY-BOARD OPERATING ?
Yes
A
GO TO PAGE 1 of 4
No
No
No
REPLACE MICROPROCESSOR PCB
4
POWER SUPPLY/ MONITOR ADJUSTMENTS
2,13
REPLACE KEYBOARD
14
D
GO TO PAGE 4 of 4
FIXED ?
Yes
E
GO TO PAGE 4 of 4
FIXED ?
F
GO TO PAGE 4 of 4
No
No
REPLACE MONITOR/POWER SUPPLY PCB
3
REPLACE MICROPROCESSOR PCB
4
E
GO TO PAGE 4 of 4
F
GO TO PAGE 4 of 4

Power Supply Check from the Microprocessor PCB

You can quickly isolate problems if you check voltages on the microprocessor board. If all voltages at connector J4 are within tolerance, the microprocessor board is at fault (Figure 3-3). If they aren't within tolerance, go to "Adjustments and Alignments," Chapter 4, and adjust the power supply. If you can't adjust the power supply to meet the tolerances, you may need to replace it.

For quick reference, you can check four of the five power supply voltages on the microprocessor board without opening the cover on the monitor (the fifth, +24.5V, never reaches the microprocessor PCB).

Figure 3-3 Power Connector at the Microprocessor PCB

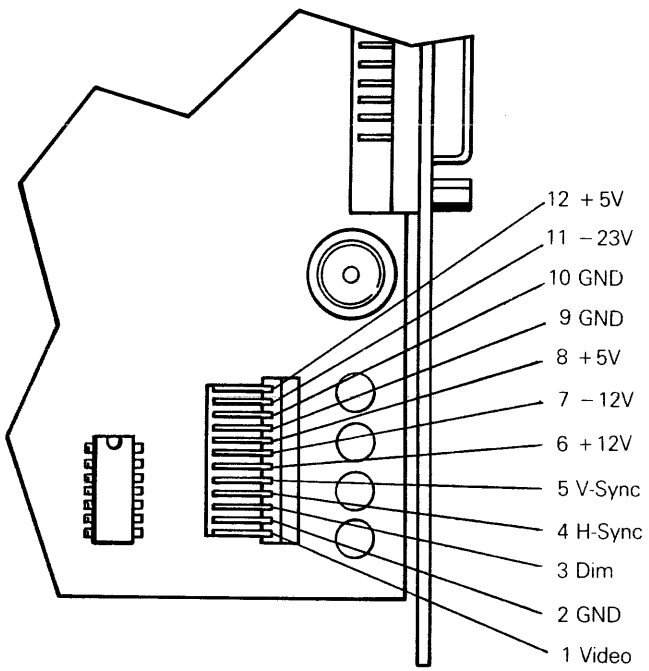

Tools required:
Voltmeter, Phillips screwdriver

1. Turn the monitor OFF.

2. Remove two No. 1 Phillips screws holding the rear panel in place. Pull the microprocessor PCB two inches out of the unit.

3. Find connector J4 on the microprocessor board.

4. Attach one lead from the DVM to J4-10, ground.

5. Turn the monitor on.

6. Check the +5V power supply on J4-12. Look for +5V, ±2 percent. See the troubleshooting flowchart if the signal isn't within tolerance.

7. Check the +12V power supply on J4-6. Look for +12V, ±5 percent. See the troubleshooting flowchart if the signal isn't within tolerance.

8. Check the -12V power supply on J4-7. Look for -12V, ±5 percent. See the troubleshooting flowchart if the signal isn't within tolerance.

9. Check the -23V power supply on J4-11. Look for -23V, ±5 percent. See the troubleshooting flowchart if the signal isn't within tolerance.

Checking Horizontal Synchronization

Checking the horizontal synchronization helps determine which PCB to replace: either the microprocessor PCB or the monitor/power supply PCB.

Tools Required:
Oscilloscope

1. Find connector J4 on the microprocessor PCB (see Figure 3-3).

2. Touch J4-4 with the oscilloscope probe. Look for a 44 µs, ±10 percent, pulse, 4.8 to 5Vp-p. If the horizontal synchronization signal is within tolerance, replace the monitor/power supply PCB. If it isn't within tolerance, replace the microprocessor PCB. See the troubleshooting flowchart.

Adjusting Vertical Hold

On a few early terminals, the monitor/power supply PCB has an extra potentiometer to adjust vertical hold. You can find it next to HGT, VR302, directly below the anode cap. If you need to adjust it, this is the procedure:

1. Display a full screen of E's (see "Adjustments and Alignments," Chapter 4).

2. Turn the vertical hold potentiometer until the display rolls in one direction.

3. Turn the vertical hold potentiometer until the display rolls in the other direction.

4. Center the potentiometer; the display should be steady. If it isn't steady, see the troubleshooting flowchart.

4 ADJUSTMENTS AND ALIGNMENTS

This chapter describes adjustments and alignments for the terminal. In particular, it discusses power adjustments, and monitor alignment and adjustments. Before you align the monitor, check the power supply voltages. Adjust them if they aren't in tolerance. You should complete a full monitor/power supply adjustment and alignment whenever you replace the monitor/power supply PCB or the CRT/yoke assembly.

WARNING--CRT/yoke has high voltages. Only qualified service personnel should adjust it.

POWER ADJUSTMENTS

The monitor/power supply PCB provides all of the voltages for the microprocessor PCB (+5V, -12V, +12V, and -23V). It also supplies +24.5V for the CRT monitor. You can adjust the +24.5V and +5V supplies.

Note--You can find the locations of all components and test points referred to in this chapter in Figure 4-1.

Figure 4-1 Monitor/Power Supply Component Layout

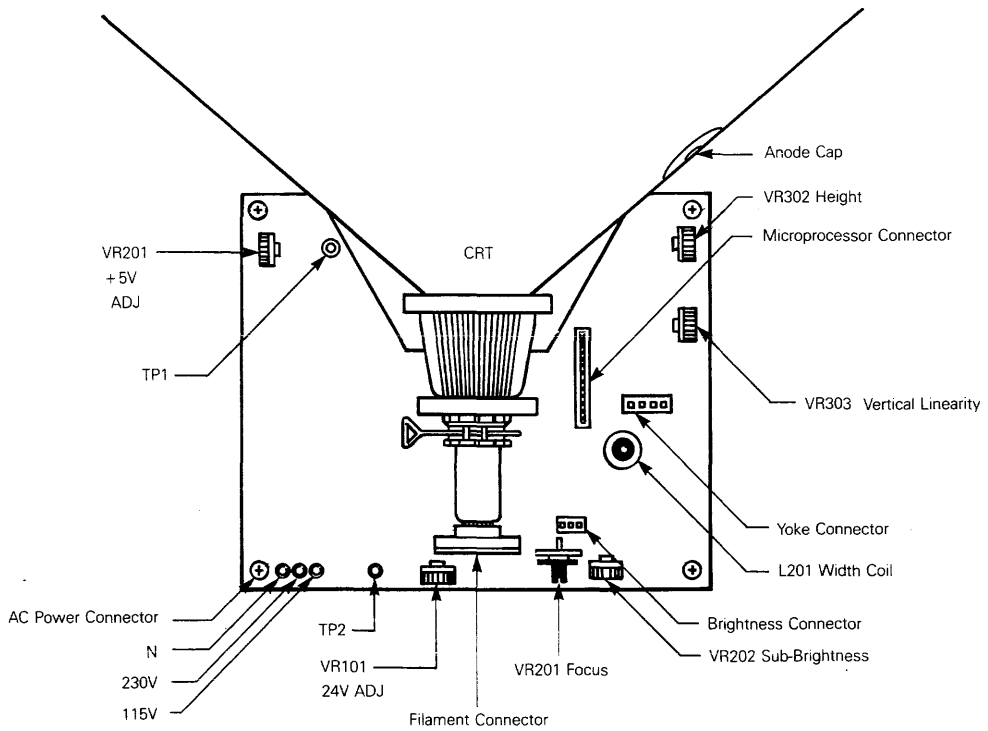

Tools Required:
No. 1 Phillips screwdriver voltmeter
Nonconductive alignment tool

1. Turn the terminal OFF.

2. Unplug the terminal from its power source. If communications cables are attached to the back of the terminal, detach those too.

3. Remove the four No. 1 Phillips screws that hold the CRT cover in place (one in each corner).

4. Gently pull the CRT cover up and away from the terminal.

5. Plug the terminal into a power source.

6. Turn the terminal ON.

7. Check the +5V supply at TP1 on the monitor/power supply PCB, using the chassis as ground.

Note--The monitor/power supply PCB holds two VR201 components. Look for the VR201 in the left front of the PCB to adjust the power supply voltages.

8. Adjust VR201 until the digital voltmeter reads +5V ±2 percent.

9. Check the +24.5V supply at TP2 on the monitor/power supply PCB, using the chassis as ground.

10. Adjust VR101 until the digital voltmeter reads +24.5V ±2 percent.

Note--If you can't bring either the +5V supply or the +24.5V supply into tolerance, see "Troubleshooting," Chapter 3.

11. Check the -12V supply at the gray wire on JP3.7 (microprocessor board wiring harness). The digital voltmeter should read -12V ±5 percent. If the -12V supply is not within tolerance after you have adjusted the +5 and +24.5V supplies, see "Troubleshooting," Chapter 3.

12. Check the +12V supply at the blue wire on JP3.6 (microprocessor board wiring harness). The digital voltmeter should read +12V ±5 percent. If the +12V supply is not within tolerance after you have adjusted the +5 and +24.5V supplies, see "Troubleshooting," Chapter 3.

13. Check the -23V supply at the purple wire on JP3.11 (microprocessor board wiring harness). The digital voltmeter should read -23V ±5 percent. If the -23V supply is not within tolerance after you have adjusted the +5 and

+24.5V supplies, see "Troubleshooting," Chapter 3.

14. Check to see if the display needs alignment. See "Does the Terminal Meet the Display Specification?" If it doesn't need alignment, turn the terminal OFF, unplug it, and replace the top cover.

    If the display does need alignment, continue to "Aligning the Terminal Display."

Does the Terminal Meet the Display Specification?

Before you adjust the display on the monitor, measure the screen margins and study the display. Use the following procedures:

Note--If you have just finished checking and adjusting the power supplies, go to step 4.

Tools Required:
- Millimeter ruler
- Nonconductive alignment tool

1. Turn the terminal OFF.

2. Detach any communications cables from the back of the terminal.

3. Turn the terminal ON.

4. Hold down SHIFT, then press BREAK on the terminal keyboard. You should see BLK displayed above the status line. If you see anything else, hold down SHIFT, then press BREAK again until you see BLK.

5. Press ESC . (period).

6. Then press E. This displays 24 rows of E (an excellent test pattern for display alignment).

7. Hold down SHIFT, then press SETUP. This adds lines 0 and 25.

8. Margins on the top, bottom, and both sides should measure 12mm ±3mm. If they don't, see the next section.

9. Look at the display. If there is barreling or pincushioning; if the letters on the top aren't the same size as letters on the bottom; if any of the display edges aren't straight; or, if there are brightness or focus problems, see "Aligning the Terminal Display."

10. If the display is within specification and looks regular, turn off the terminal. Now you can close the terminal and reattach the communications and power cables.

Aligning the Terminal Display

The monitor has several alignments and adjustments. Perform these procedures only if the display is out of tolerance and doesn't match the specification.

WARNING--The CRT/yoke assembly has high voltages. Only qualified service personnel should perform adjustments to it.

Tools Required:
- No. 1 Phillips screwdriver
- Nonconductive alignment tool

Note--If you already have an E alignment pattern on the screen, go to step 5. This procedure assumes that you have just checked or adjusted the power supply voltages, the top cover is off, and the power is ON.

1. Hold down SHIFT, then press BREAK on the terminal keyboard. You should see BLK displayed above the status line. If you see anything else, hold down SHIFT, then press BREAK again until you see BLK.

2. Press ESC . (period).

3. Press E. This displays 24 rows of E.

4. Hold down SHIFT, then press SETUP. This adds lines 0 and 25.

5. Look at the display, then at Table 4-1. Table 4-1 lists display problems, the adjustments that fix them, and where to go for further instructions.

Table 4-1 Problems and Adjustments

Display Problems	Adjustments
Display too short or too tall	Height, p. 4-6
Letters at the top of the display aren't the same height as those at the bottom of the display	Linearity, p. 4-6
Fuzzy letters	Focus, p. 4-6
Too wide or too narrow	Width, p. 4-6
Not centered	Yoke Lock, p. 4-7
Too bright, too dim,	Sub-Brightness,

raster scan lines show	p. 4-9
Pincushioning, barreling, crooked edges, corners that sag or move out of specification	Display Magnets, p. 4-9

6. Adjust the display. Check Figure 4-1 for component locations.

Note--If you finish both the power and display adjustments, and the display is still not within tolerance, see "Troubleshooting," Chapter 3.

7. When the display is within specification, and looks regular, turn off the terminal. Now you can close the terminal and reattach communications and power cables.

ADJUSTMENTS

Height

The height adjustment is labeled HGT VR302 on the monitor/power supply board.

Adjust VR302 until the top edge and the bottom edge of the display are both 12mm ±3mm from the edge of the bezel.

Linearity

The linearity adjustment is labeled LIN VR303 on the monitor/power supply board.

Adjust VR303 until characters on the bottom of the display are the same height as those on the top.

Focus

Note--Do not use the focus control to adjust the outer extremities of the screen. Some focus distortion happens in all CRTs.

The focus adjustment is labeled FOCUS VR201 on the monitor/power supply board.

Adjust VR201 until the characters halfway between the center of the display and the bezel are distinct and clear.

Width

CAUTION--Do not use a metal tool to adjust the width coil. The magnetic properties of a metal tool will affect the adjustment.

The width adjustment is labeled L201 on the monitor/power supply board.

Adjust L201 until either side of the display is 12mm ±3mm from the edge of the bezel.

Yoke Lock

CAUTION--Do not tighten the yoke lock too much or the neck of the CRT will break.

The yoke lock is located on the neck of the CRT (See Figure 4-2).

- Loosen the yoke lock on the neck of the CRT.
- Rotate the yoke until the display is centered.
- Tighten the yoke lock.

Figure 4-2 Yoke Lock on the CRT Neck

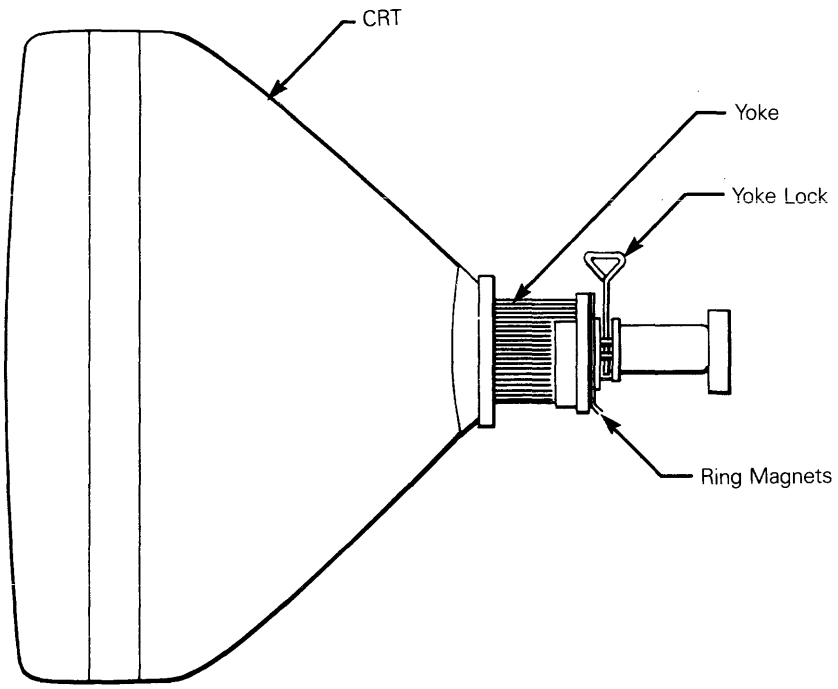

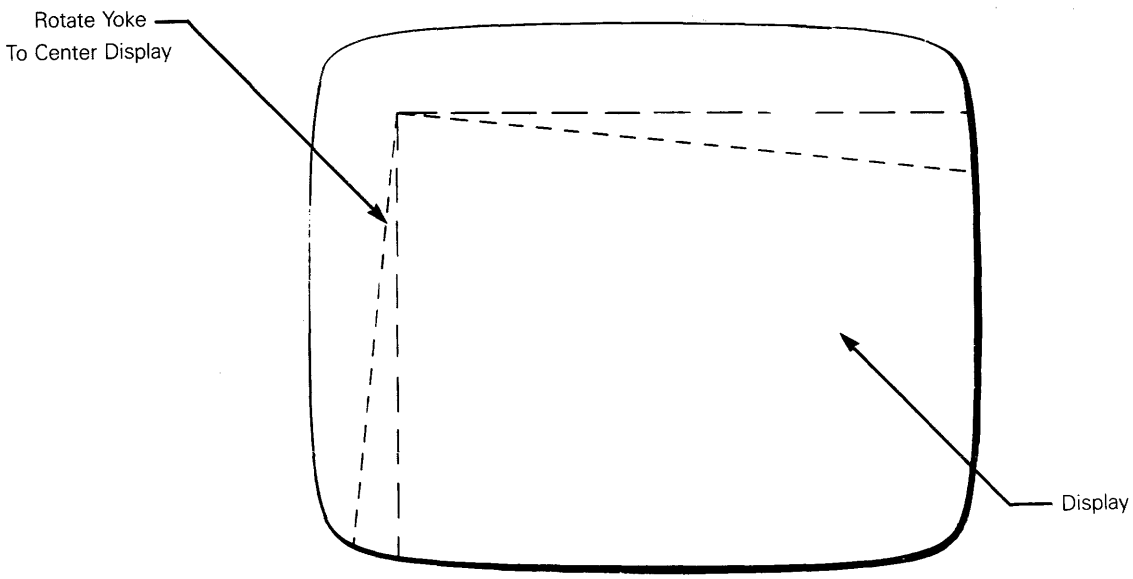

Sub-Brightness

The Sub-brightness potentiometer is labeled SUB-B on the monitor/power supply board.

- Turn the operator brightness control as far clockwise as possible.
- Turn SUB-B on the monitor/power supply board as far counterclockwise as possible. You should see the raster lines on the screen.
- Slowly turn SUB-B clockwise, just until the raster is no longer visible.

Display Magnets

There are eight display magnets on a ring around the yoke. When turned, they change the screen area they correspond to. They can also affect adjacent areas. Figure 4-3 identifies each magnet; Table 4-2 identifies which portion of the screen each changes.

Figure 4-3 Display Magnets

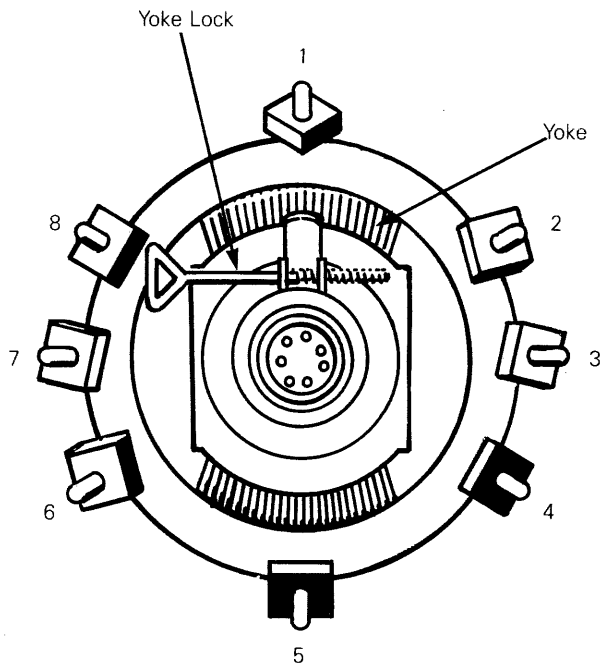

Table 4-2 Screen Areas Affected by Display Magnets

Magnet Number	Area Affected
1	Top
2	Upper left corner
3	Left
4	Lower left corner
5	Bottom
6	Lower right corner
7	Right
8	Upper right corner

5 ILLUSTRATED PARTS LIST

This chapter provides the information you need to order parts for the WY-50 terminal.

You will find numbered parts lists opposite each assembly drawing in this chapter. The item numbers correspond to the numbers in the circles on the assembly drawings. The part name indicates Wyse's description of the part. The part number is the official Wyse stock number. When you order replacement parts, please use both the part name and part number.

WY-50 Display Assembly Parts List

Item	Part Name	Part
1.	WY-50 Logic PCB (Microprocessor PCB, gate array)	32-005-02
2.	WY-50 Display Assembly	32-006-01
3.	WY-50 Top Cover	44-002-03
4.	WYSE Plate with adhesive	44-009-03
5.	Label, 115 VAC (domestic)	45-006-03
	Label, 220 VAC (international)	45-006-04
6.	Label, "REV B"	45-013-02
7.	Screw, CBM M4 x 8	50-005-21
8.	Screw, CBM M3 x 6	50-005-22
9.	Screw, CFM M3 x 5, black	50-005-57
10.	Fuse, 2 amp, 250V, fast blow	80-009-08
11.	PVC sheet, 188 x 160mm	80-806-09
12.	Adhesive, silicone rubber	82-002-04
13.	WY-50 Monitor/Power Supply PCB	99-019-01

NOTES :

1. MAKE SURE PROPER MODEL NUMBER AND REVISION ARE STAMPED HERE
2. MAKE SURE SCREWS ARE TORQUED PROPERLY. IN ACCORDANCE WITH SPEC. 02-001-45

ZONE	REV.	DESCRIPTION	DATE	APPROVED
	A/C	MANUFACTURING RELEASE PER ECN # 458	10-10-84	
	B	SEE ECN # 822		
BB	C	SEE ECN # 446	10-15-86	

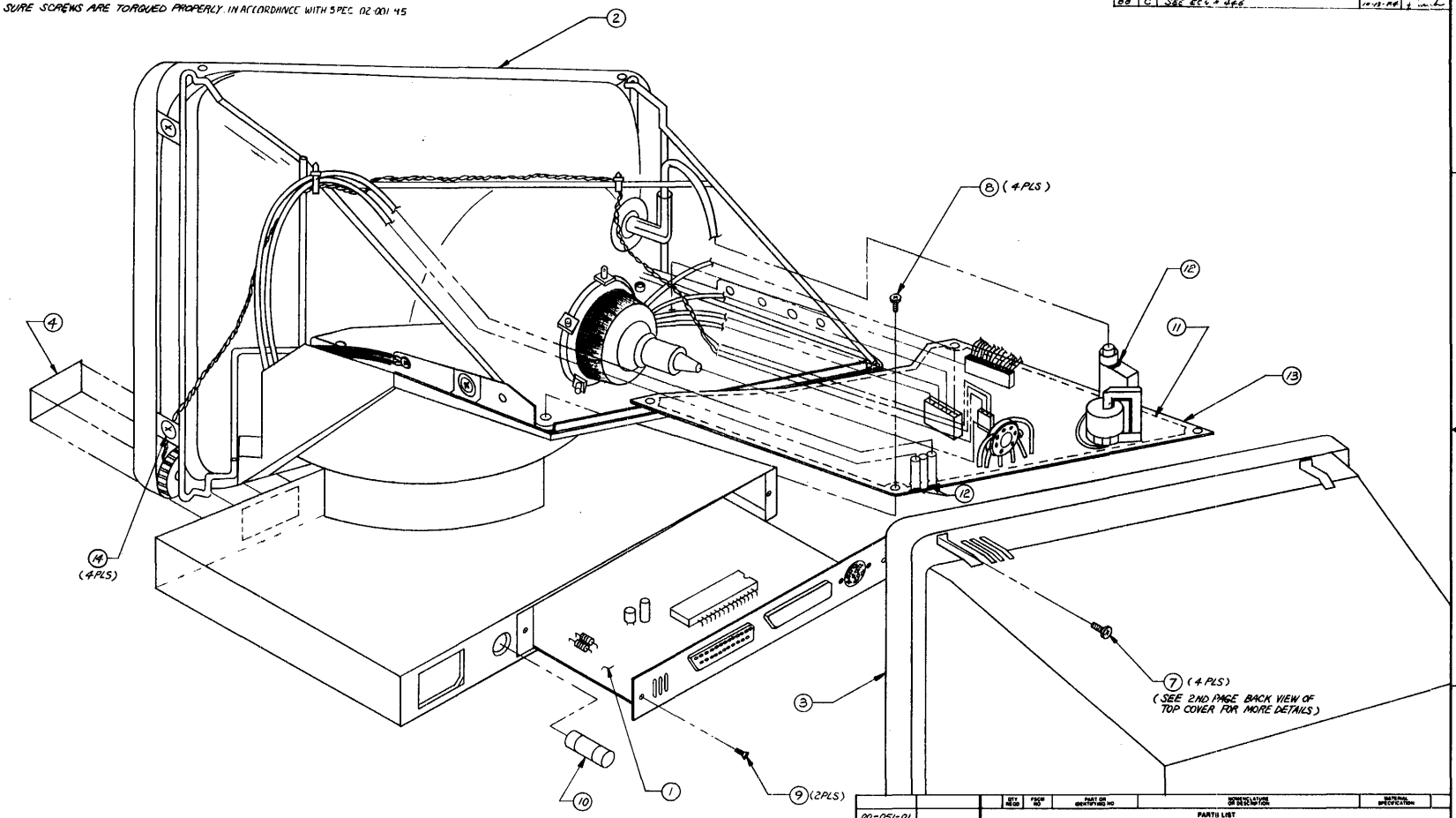

QTY PER DWG	FSCM NO	PART OR IDENTIFYING NO	NOMENCLATURE OR DESCRIPTION	MATERIAL SPECIFICATION
00-051-01				
00-050-01		WY-50		

PARTS LIST

NEXT ASSY | USED ON

APPLICATION

THIRD ANGLE PROJECTION

UNLESS OTHERWISE SPECIFIED DIMENSIONS ARE IN TOLERANCES
INCHES: FRACTIONS ±, DECIMALS .XX ±, .XXX ±
METRIC: XX.X, XXX.X
ANGLES
MATERIAL | FINISH

DO NOT SCALE DRAWING

CONTRACT NO

APPROVALS	DATE
DRAWN ALICE LIU	9-5-84
CHECKED	
ISSUED Al Gill	10-12-84

WYSE TECHNOLOGY

WY50 DISPLAY ASSY.

SIZE D | FSCM NO. | DWG. NO. 10-006-00 | REV C

SCALE NONE | SHEET 1 OF 2

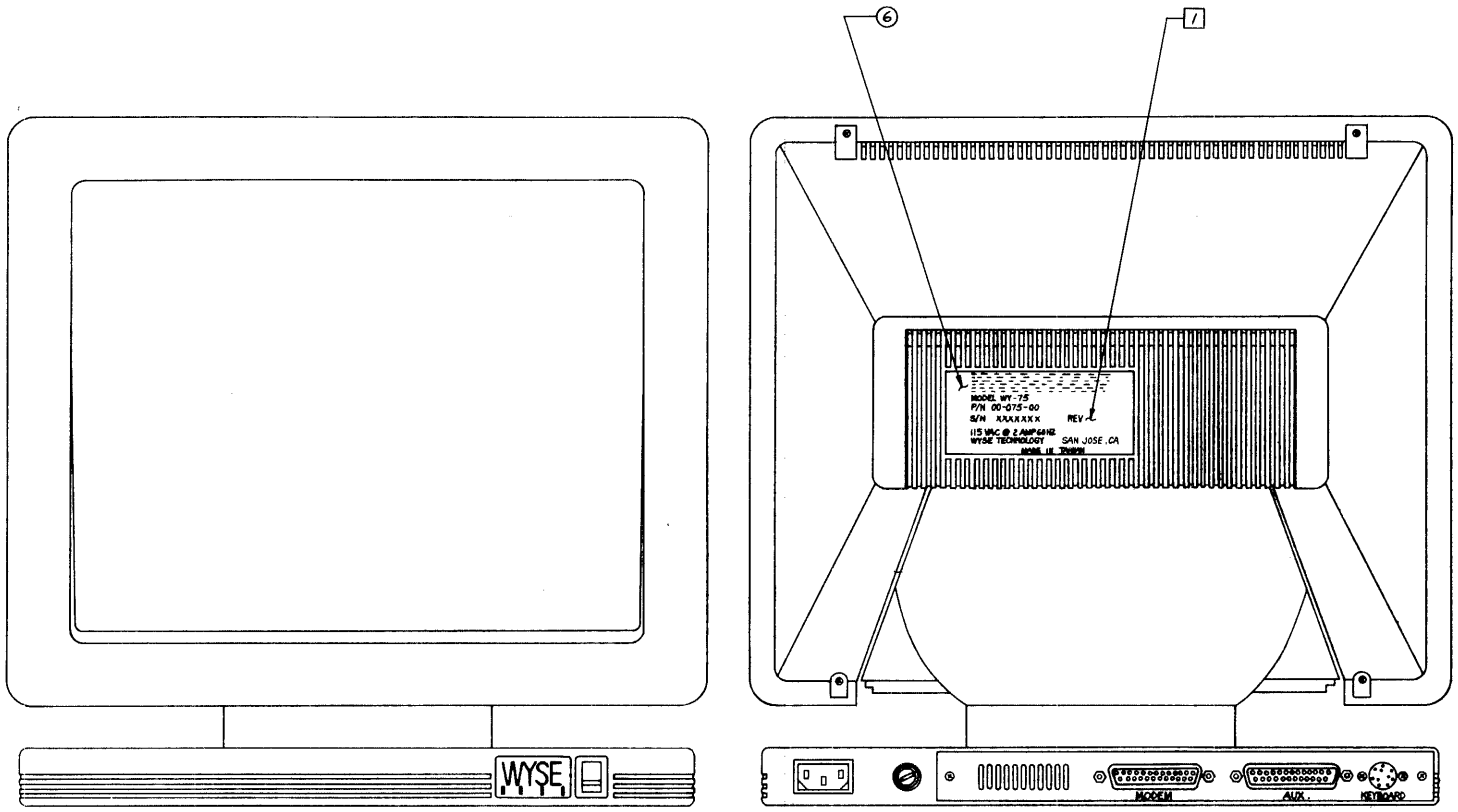

10-006-02 2 C

REVISIONS

ZONE	REV.	DESCRIPTION	DATE	APPROVED

PARTS LIST

00-075-00 WY-75

APPLICATION

THIRD ANGLE PROJECTION

CONTRACT NO

APPROVALS	DATE
DRAWN ALICE LIU	8-18-88
CHECKED	
ISSUED	

WYSE TECHNOLOGY

DISPLAY ASSY.

SIZE D | FSCM NO. | DWG. NO. 10-006-02 | REV. C

SCALE ANSAE | SHEET 2 OF 2

WY-50 Keyboard Assembly Parts List

Item	Part Name	Part
1.	WY-50 Keyboard with Cable	32-008-01
2.	Keyboard Bottom Cover	32-009-01
3.	WY-50 Keyboard Top Cover	44-003-02
4.	WY-50 Keyboard Label	45-007-01
5.	WY-50 Keyboard Serial No. Label	45-008-01
6.	Screw, CBM M4 x 8	50-005-21
7.	Screw, CBM M4 x 6	50-005-71
8.	Tape, double sided,	82-003-03

NOTES:

1. MAKE SURE THAT AREA IS LINT-FREE IF NECESSARY WIPE OFF WITH ISOPROPANOL PRIOR TO INSTALLING DOUBLE SIDE TAPE
2. MAKE SURE PART NUMBER, SERIAL NUMBER AND MODEL REVISION LEVEL SHOWS UP HERE

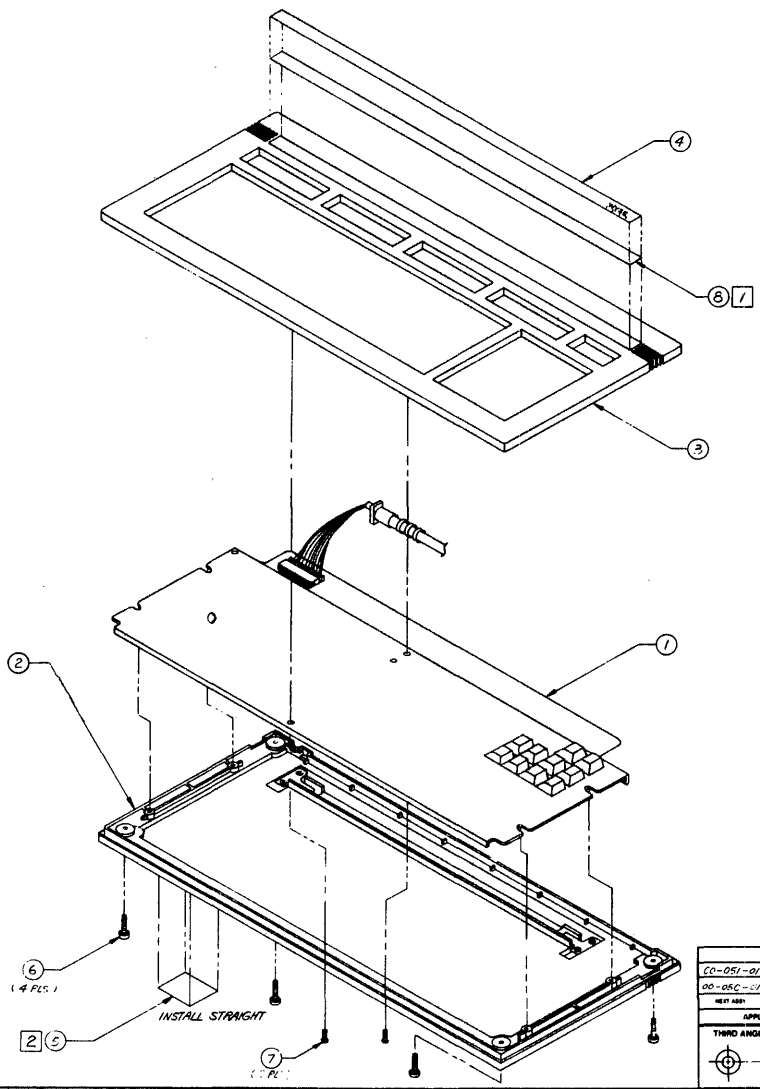

ZONE	REV.	DESCRIPTION	DATE	APPROVED
	F1 K	MANUFACTURING RELEASE PER ECN #458	10-10-84	
	C	[illegible] 193		

QTY REQD	FSCM NO	PART OR IDENTIFYING NO	NOMENCLATURE OR DESCRIPTION	MATERIAL SPECIFICATION

PARTS LIST

CO-051-01	
00-050-01	WY-50
NEXT ASSY	USED ON

APPLICATION

THIRD ANGLE PROJECTION

UNLESS OTHERWISE SPECIFIED DIMENSIONS ARE IN TOLERANCES

INCHES: FRACTIONS ± DECIMALS .XX ± .XXX ±

METRIC: .0 X ± .0 XX ±

ANGLES

MATERIAL | FINISH

DO NOT SCALE DRAWING

CONTRACT NO

APPROVALS	DATE
DRAWN ALICE LIU	8-16-84
CHECKED	
ISSUED [illegible]	[illegible]
[illegible]	10-12

WYSE WYSE TECHNOLOGY

WY-50 KEYBOARD ASSY.

SIZE D | FSCM NO | DWG. NO. 10-007-01 | REV C

SCALE NONE | SHEET 1 OF 1

6 THEORY OF OPERATIONS

INTRODUCTION

This section describes the terminal's basic logic functions. For technicians unfamiliar with raster scan techniques, a brief explanation of terms is given below.

RASTER SCAN TERMINOLOGY

The terminal has a 14-inch cathode ray tube (CRT) display. Because the terminal is a video display, most of its circuitry provides appropriate inputs for the CRT (i.e., clocks and video information).

An electron beam sweeps the face of the CRT. The CRT displays data by controlling this beam. The electron beam begins in the upper left-hand corner of the display and sweeps from left to right. One sweep of the beam is called a **scan line**. When the beam returns from the right side of the screen to the left side, beginning the next scan line, it must be **disabled** (turned off). This prevents a streak from appearing on the face of the CRT. Disabling the beam is called **horizontal blanking**. At the end of 338 scan lines, the electron beam arrives at the lower right-hand corner of the display. In order to return to the upper left-hand corner, the beam must be **disabled** again so a vertical streak doesn't appear on the face of the CRT. Disabling the beam at this time is called **vertical blanking**. The amount of time it takes the beam to move from the upper left-hand corner of the display and return is a **field**. By convention, field time normally equals the period of the AC power source [e.g., in the United States, field time is 1/60 of a second (60 Hz) and in Europe, 1/50 of a second (50 Hz)]. The terminal uses a 60 Hz field rate in either 60 Hz or 50 Hz AC input.

In the terminal characters are constructed within a 10 x 13 dot matrix (80 columns). The field must then be broken into vertical and horizontal axes: The vertical axes consist of scan lines and the horizontal axes consist of bit times. Thirteen scan lines and 10 bit times are used to define the character matrix (10 x 13) in an 80-column display. Thirteen scan lines and nine bit times are used to define the character matrix (9 x 13) in a 132-column display.

PRINTED CIRCUIT BOARD LAYOUT AND COMPONENT IDENTIFICATION

When you study the theory of operations for the terminal, you may want to identify certain components as you read about them. The text identifies each component with the X-Y coordinate system that you use on all printed circuit boards. This system can help you locate components on the PCB that are referred to in the schematics as well. Here is a brief explanation of the coordinate system:

A set of alphabetical coordinates (A, B, C, etc.) runs the length of the microprocessor board. A set of numerical coordinates(1, 2, 3, etc.) runs along the width of the microprocessor board. These coordinates form an X-Y grid. Each component's X-Y coordinate is printed next to it on the PCB. Look at Figure 6-1 for an example of coordinate identification.

Figure 6-1 Microprocessor PCB

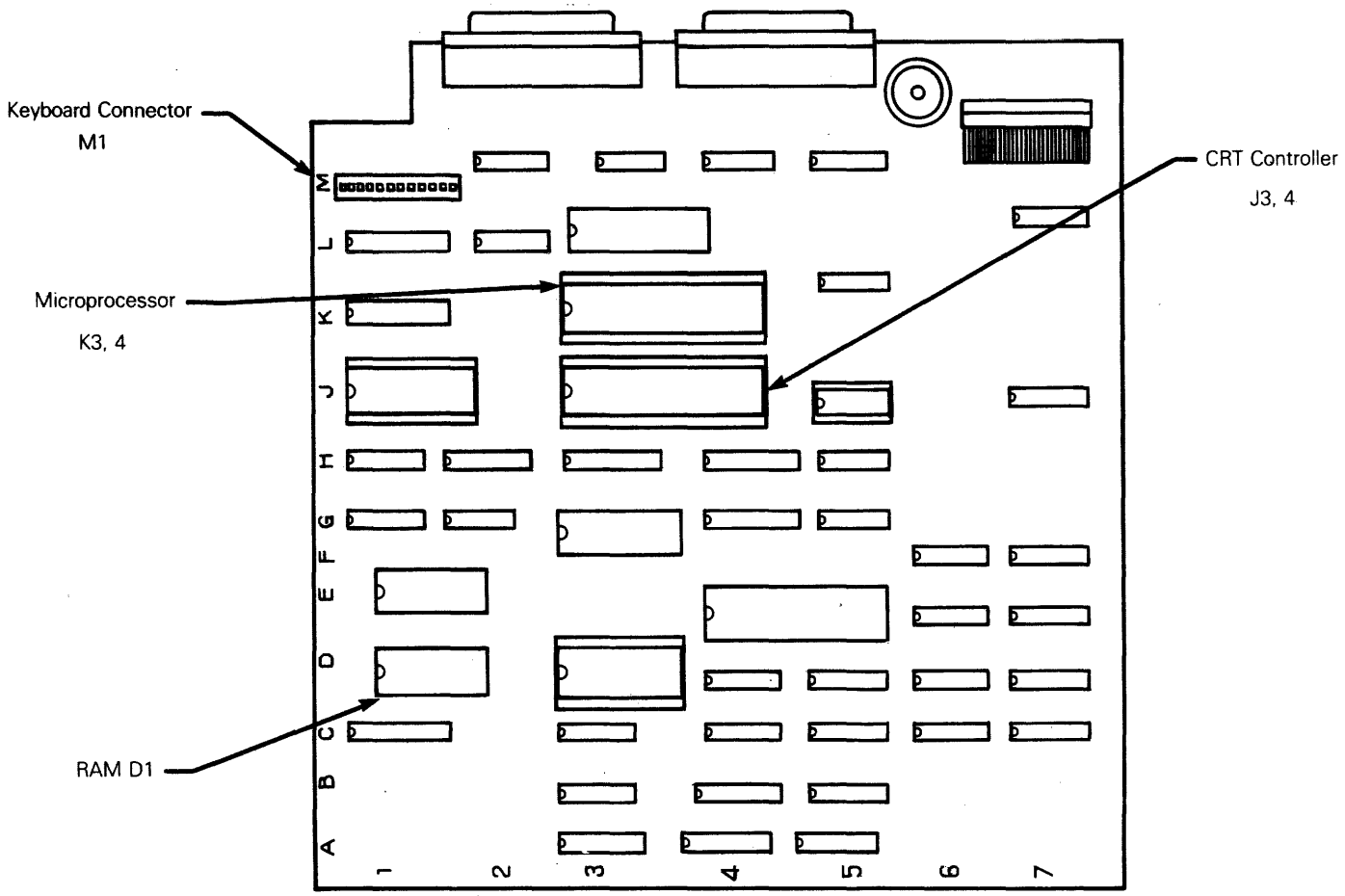

MICROPROCESSOR PCB BLOCK DIAGRAM

Figure 6-2 is a block diagram of the microprocessor PCB. All of the logic (except the display and power supply) is located on the microprocessor PCB. Note that each block on the block diagram is numbered. This number corresponds to the item numbers given in the following descriptions.

Figure 6-2 Microprocessor PCB Block Diagram

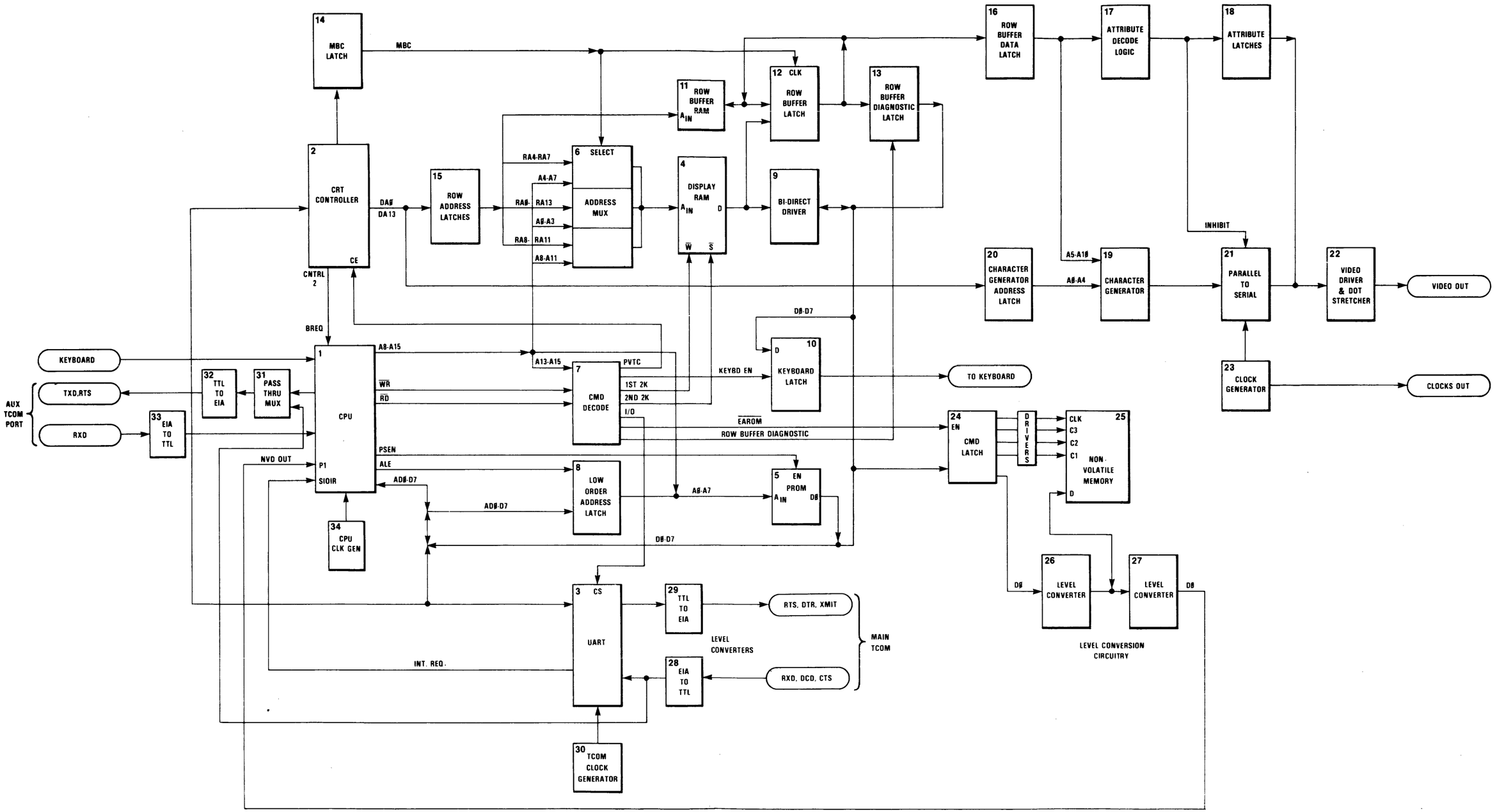

Note--There are two versions of the microprocessor PCB in the field. One uses TTL logic throughout; the other replaces some TTL functions with a gate array integrated circuit. You will find notes in the text for any differences between the two configurations.

Single component microprocessor (1)--The terminal has a single-component microprocessor which contains 128 bytes of RAM, 32 I/O lines, two 16-bit counter/timers, and UART. It has integral interrupt and clock circuitry. The microprocessor IC uses eight data lines that are multiplexed with the lower eight address lines. Address information appears on these lines only when the ALE (address latch enable) signal is present. The upper address lines (A8-A15) are nonmultiplexed single-direction lines. The UART on the microprocessor PCB drives an RS-232C compatible printer.

CRT controller (2)--The programmable video timing controller IC is initialized by the microprocessor chip when you turn on the power. The CRT controller interfaces to the video display buffer (RAM) on a direct-memory access basis. Display data is then sent to the character generation circuitry for processing. The CRT controller chip generates the cursor and also provides the necessary timing and control information for the display logic (scan line count, horizontal synchronization, vertical synchronization, and blank).

UART (3)--The UART takes parallel data from the microprocessor and converts it to a bit-serial format for external communication equipment. In addition, the UART converts bit-serial information received from an external source, to parallel information usable by the microprocessor. The UART flags the microprocessor when it needs an interrupt.

Display RAM (4)--The display RAM consists of two 2K by 8-bit static RAM chips. RAM is used as a volatile storage medium for display information and telecommunications (TCOM) buffers. The RAM can be accessed by either the microprocessor or the CRT controller.

PROM (5)--The PROM is nonvolatile memory for program storage. Every routine resides in the PROM. The terminal PROM can be either 4K, 8K, or 16K bytes. The PROM does not reside within the normal memory map because it has a unique enable line (PSEN).

RAM address multiplexer (6)--The RAM address multiplexer allows address information from either the microprocessor or the CRT controller to access the RAM. The multiplexer is selected by the memory bus control (MBC) signal, which is generated by the CRT controller.

Address decoder (7)--The address decoder decodes the high order address bits (A13, A14, A15) and the Read and Write control lines

($\overline{RD}$ and $\overline{WR}$) from the microprocessor. From these signals the decoder generates enable signals for the RAM, UART, CRT controller, electrically alterable ROM (EAROM) keyboard, and diagnostic row buffer register.

Low order address latch (8)--This integrated circuit latches the lower order address information presented to it by the microprocessor at address latch enable time. This is necessary because the lower address lines also serve as the bidirectional data bus.

Bidirectional bus driver (9)--This driver gates data from the microprocessor to RAM, or data from RAM to the microprocessor.

Keyboard latch (10)--The microprocessor tests to see if a key has been pressed on the keyboard by addressing each key and then examining the keyboard return line (P1.4 on the CPU). The keyboard latch latches this address information so the keyboard can use it.

Row buffer RAM (11)--The row buffer RAM is loaded with display information from the display RAM. This display data is read out of the RAM 13 times (once for each scan line) and presented to the character generation circuit for decoding.

Low buffer latch (12)--The row buffer latch holds the display data from the video buffer (part of the display RAM) until it can be loaded into the row buffer RAM.

Row buffer diagnostic latch (13)--This latch is used for diagnostics only. It latches data during DMA transfers from the row buffer RAM to the row buffer data latch. At the end of each DMA transfer it retains the last byte transferred. This byte can be read by the CPU (prior to the next DMA transfer) and is useful in diagnosing failures in the data path between the video buffer and the character generation circuitry.

Memory bus control latch (14)--The memory bus control latch latches the CNTRL 3 signal from the CRT controller. This output is the memory bus control signal. This signal selects the RAM address multiplexer and enables the row buffer latch. It is used when the CRT controller reads in a row of characters with DMA.

Row address latches (15)--When the CRT controller initiates a DMA transfer, it outputs the address of the data in the video buffer it wishes to display. This address information (RA0-RA13) is latched into the row address latches for use by the RAM address multiplexer.

Row buffer data latch (16)--The row buffer data latch stores each character to be displayed (one at a time) for use by the attribute decoding and character generation circuitry.

Attribute decoding logic (17)--Each character read out of the row buffer RAM is examined to see if it is an attribute (blink, dim,

reverse video, etc). Attribute characters are distinguishable: bit 7 must be high, and bits 5 and 6 must be low. If an attribute code is detected, the display blanks at the attribute's location and all subsequent characters exhibit the enabled attribute.

Attribute latches (18)--The attribute latches comprise a current attribute and a row attribute latch. These latches ensure that each character displayed has the correct attribute and that each scan line within a row starts with the correct attribute.

Character generator (19)--The character generator is a PROM that has been programmed to provide a unique bit pattern output for each displayable character.

Character generator address latch (20)--The CRT controller outputs are multiplexed. One of the outputs is scan line information. This scan line information is presented to the address latch, where it will (in conjunction with data from the row buffer RAM) serve as address information to the character generator.

Parallel-to-serial converter (21)--The output of the character generator PROM is an 8-bit parallel code. The raster scanned CRT is a serial device. The parallel-to-serial converter converts the parallel output of the character generator to a serial format the CRT can use.

Video drivers and dot stretcher (22)--This circuitry allows the output of the parallel-to-serial converter to interface with the CRT. In addition, a dot stretching circuit extends the ON time of video dots so that single vertical rows of dots appear to have the same intensity as strings of horizontal dots. The BLANKING signal is used to disable the driver so that the video output is inhibited during Vertical and Horizontal Retrace.

Video clock generator (23)--The clock generator consists of a crystal oscillator and the logic that provides clocks for the video circuitry. One clock is generated at the video dot rate, and another clock is generated at the video character rate.

Command latch (24)--The command latch is attached directly to the microprocessor's data bus. When enabled, the command latch latches data bits 0 through 5 and uses them to send control information and data to the EAROM.

Nonvolatile memory (25)--The nonvolatile memory consists of an EAROM that is programmed by the operator in the setup. This memory stores setup parameters such as baud rate and parity. The EAROM retains its data until reprogrammed by the operator.

Level converters (EAROM) (26 and 27)--The EAROM requires voltage levels of +12V and -23V to operate. The level conversion logic provides these logic levels to the input circuitry and converts the EAROM's output to TTL levels.

Level converters (EIA to TTL) (28 and 33)--These level converters change the EIA RS-232C logic levels to TTL levels for use by the UARTs.

Level converters (TTL TO EIA) (29 and 32)--These level converters change the TTL logic levels from the UARTs to RS-232C levels for use with external equipment.

TCOM clock generator (30)--The telecommunications (TCOM) clock generator circuit consists of a crystal oscillator that provides the basic clock for the UART. The UART is then programmed (by the user in the setup) for the appropriate baud rate.

Pass-thru multiplexer (31)--The pass-thru multiplexer can be enabled so that data received by the main UART can be passed through to the output of the secondary UART (inside the microprocessor). This allows received data to be sent directly to a printer without CPU intervention.

(32)--See item 29

(33)--See item 28

CPU clock generator (34)--The CPU clock generator consists of a 11.000 MHz crystal connected to the XTAL input to the CPU. The CPU has its own internal clock generation circuitry that divides the basic crystal frequency into frequencies usable by the CPU.

CRT AND POWER SUPPLY BLOCK DIAGRAM

The terminal contains a combination monitor/power supply assembly. The power supply provides the voltages for all the logic. These voltages are +12V, -12V, +5V, -23V, and +24.5V. The -23V is used exclusively by the EAROM. Only the monitor/power supply uses the +24.5V supply. Figure 6-3 is a block diagram of the combination monitor/power supply. Note that each block is numbered. This number corresponds with the item number in the following descriptions.

Voltage doubler (1)--The terminal operates with either a 115 VAC or 230 VAC input. The voltage doubler circuit provides 350 VDC to the oscillator circuit when 115 VAC is applied, and is passive when the 230 VAC input strap is installed. This assures that the oscillator (DC to AC converter) always has a 350 VDC input regardless of the AC input voltage.

DC to AC converter (2)--The converter consists of a pair of switching transistors. It sends AC input voltage to the main power transformer. The DC to AC inverter is synchronized with the horizontal oscillator to eliminate beat frequencies.

Main switching power transformer (3)--The main power transformer provides taps for the power supply regulator circuitry and the horizontal oscillator.

Figure 6-3 Monitor/Power Supply Block Diagram

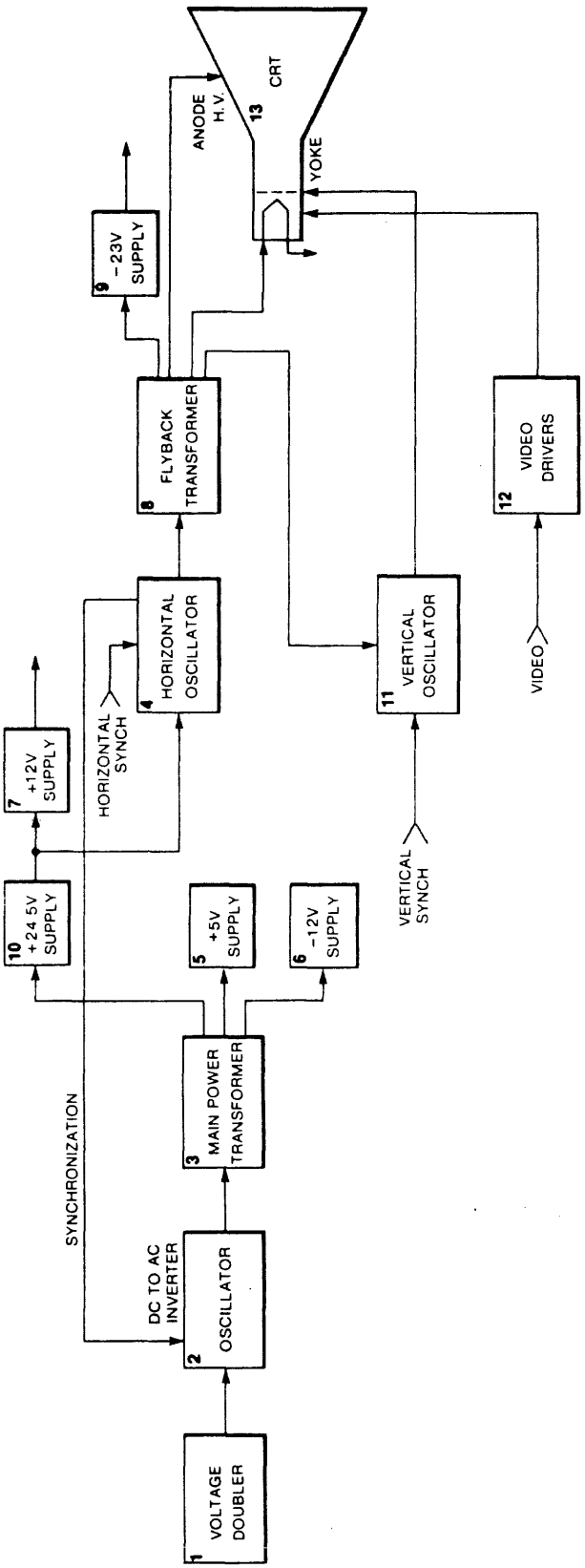

Horizontal oscillator (4)--The horizontal oscillator provides the signal to drive the flyback transformer at the correct frequency. It also makes sure that the yoke is driven at the correct frequency so that the electron beam sweeps from left to right at the correct rate. Refer to Figure 6-4 for the horizontal oscillator timing information.

+5 volt supply (5)--The +5V is derived directly from one of the main transformer taps which provides low voltage AC. The output of this tap is rectified and regulated. Regulation is accomplished by optically coupling a signal back to the DC to AC inverter which controls its duty cycle, and hence the output voltage of the main switching power transformer.

-12 volt supply (6)--The -12V supply is derived from one of the main transformer taps. The low voltage AC output is rectified and regulated.

+12 volt supply (7)--The +12V supply is derived from the +24.5 VDC. It uses a linear regulator.

Flyback transformer (8)--The flyback transformer steps up the output of the horizontal oscillator to provide the high voltage for the CRT itself. In addition, the flyback transformer has taps that provide filament power and low voltage AC input to the -23V supply.

-23 volt supply (9)--The -23V supply receives its low voltage AC input from the flyback transformer. This voltage is then rectified and filtered to provide the -23V for the EAROM.

+24.5 volt supply (10)--The +24.5V supply is derived from one of the main transformer taps. The low voltage AC output is rectified and then regulated by a linear regulator.

Vertical oscillator (11)--The vertical oscillator provides the yoke with the correct vertical drive frequency to ensure that the electron beam scans the face of the CRT at the correct vertical repetition rate. Refer to Figure 6-5 for vertical timing information.

Video drivers (12)--The video drivers provide the video input to the CRT with the correct voltage to bias the CRT grid.

CRT (13)--The cathode ray tube (CRT) displays data by modulating the electron beam with the video signal while the beam moves across the face of the screen. The horizontal and vertical drive signals determine the rate of movement.

Figure 6-4 Horizontal Oscillator Timing

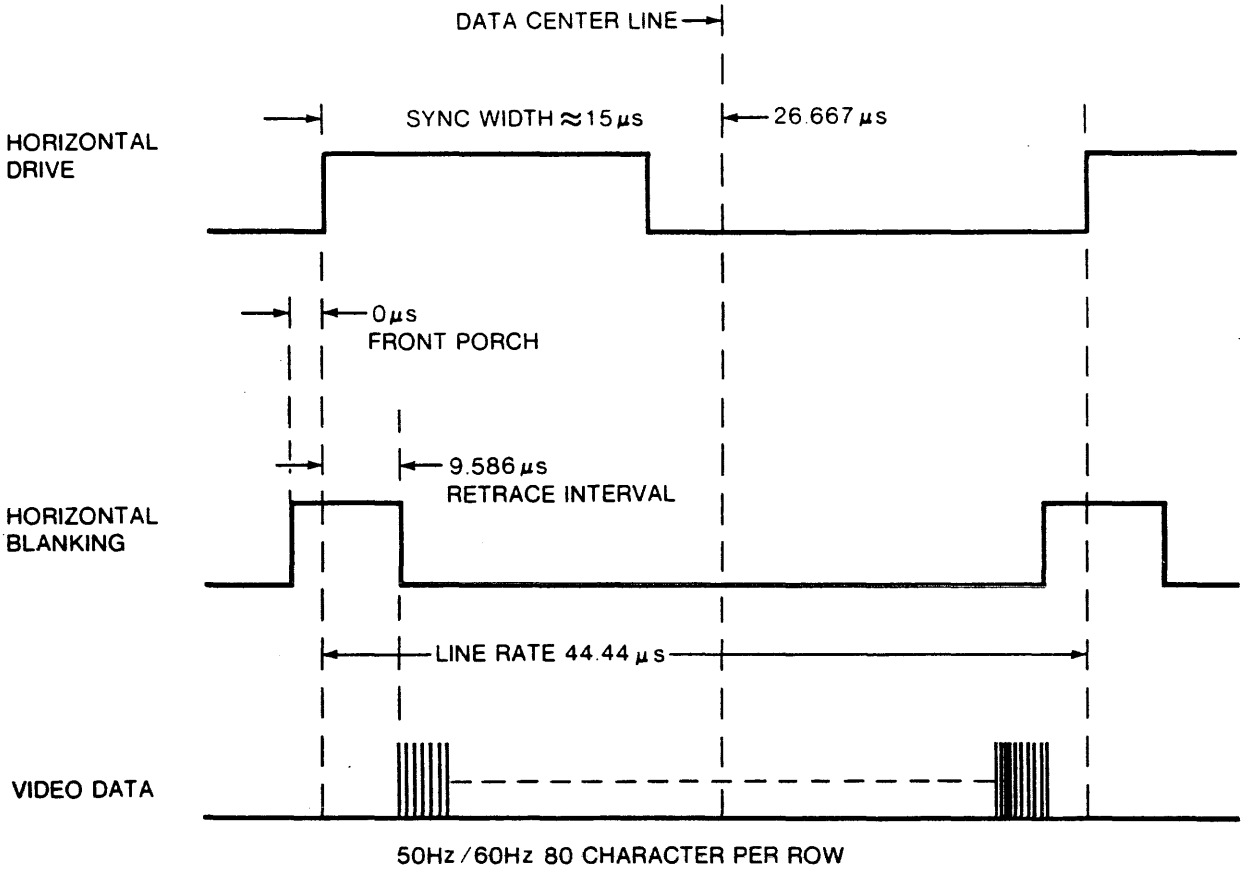

Figure 6-5 Vertical Timing

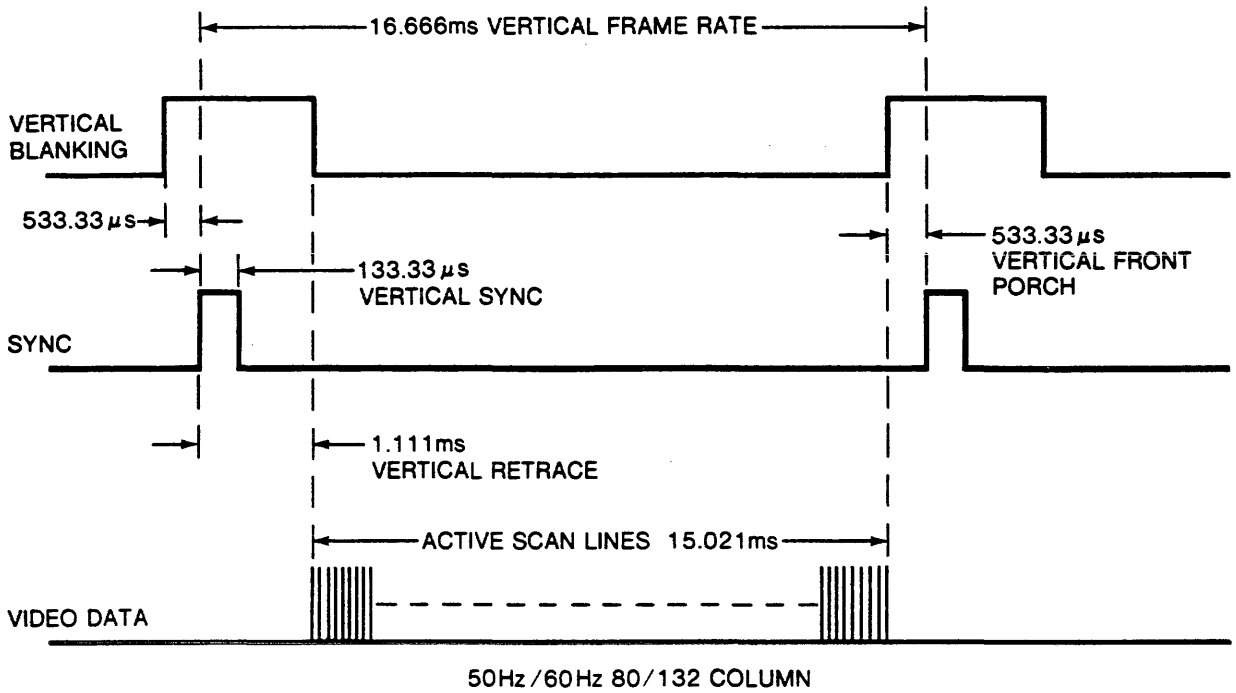

KEYBOARD BLOCK DIAGRAM

Figure 6-6 is a block diagram of the terminal keyboard. The logic that interfaces with the keyboard resides on the microprocessor PCB. Note that each block on the diagram is numbered. This number corresponds to the item numbers given in the following descriptions.

Figure 6-6 Keyboard Block Diagram

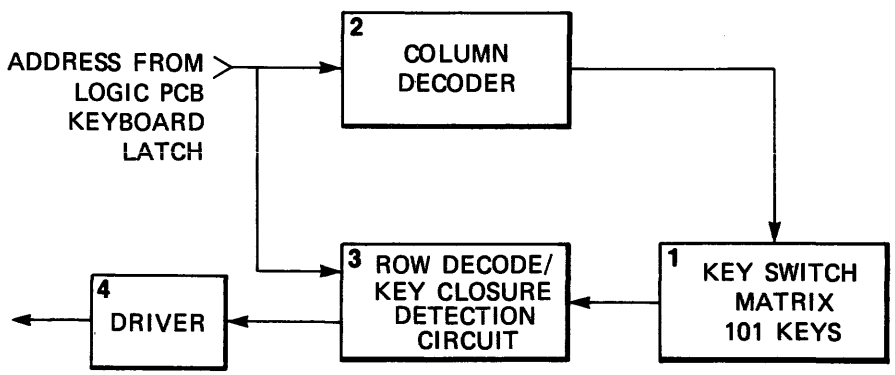

Key switch matrix (1)--The key switch matrix is divided into 16 columns and 8 rows. Each row is pulled up to +5V with a pull-up resistor. A key switch is located at each intersection of a row and a column. Pressing a KEY switch results in a unique column and row juncture.

Column decoder (2)--The column decoder is driven by the keyboard address latch on the microprocessor PCB. The microprocessor selects each column. When the microprocessor selects a column, the column decoder drives the selected column line low. Because the row lines are all pulled high, a key closure results in the column line pulling the row line low (logic 0).

Row decoder/key closure detection circuit (3)--The microprocessor addresses the row decoder, which in turn examines each row in the keyboard switch matrix. If a key has been pressed, the row decoder encounters a logic low on its input line (because the column line pulled the row line low). When this occurs, the key closure detection circuit informs the CPU of a key closure.

Line drivers (4)--The keyboard line drivers provide adequate output to minimize the signal decrease between the keyboard and the microprocessor PCB.

FUNCTIONAL DESCRIPTION

The logic board consists of six sections: microprocessor, communications interface, display memory, nonvolatile memory, keyboard interface, and video control.

Microprocessor

The 8031 microprocessor contains 128 bytes of RAM, two counter/timers, a full duplex serial port, and two parallel ports. The processor operates at 11 MHz. This allows most instructions to execute in 1.1 microseconds.

The 8031 has separate addresses for program storage and I/O. Program storage is selected with signal PSEN. The terminal uses 8K of program storage but can be expanded to 16K with no jumpers or to 32K with one jumper. The I/O address space is selected by $\overline{RD}$ (read) or $\overline{WR}$ (write).

There is an 8-bit data bus, which has the eight lower order address bits multiplexed during bus cycles. The lower address bits are latched into an 8-bit latch by the ALE signal (address latch enable). The upper eight address bits have a dedicated output port on the 8031.

Table 6-1 is a list of 8031 pin assignments.

Table 6-1 8031 Pin Assignments

Pin	Assignment
P0.0-P0.7	Data bus and lower byte of address bus.
P1.0	$\overline{\text{AUX READY}}$. Input from auxiliary serial port. Indicates DTR line is asserted.
P1.1	NVDOUT. Input from nonvolatile memory. Data is shifted in serially from memory.
P1.2	Pass-thru. Output from 8031 sends data received from the MODEM port out through the AUX port.
P1.3	$\overline{\text{AUX RTS}}$. Input to 8031 from AUX port. Indicates RTS is being asserted by AUX device.
P1.4	Key return. Input from the keyboard to the CPU. Signal is high if currently addressed key is pressed.
P1.5	BELL. Output by 8031 to sound tone generator.
P1.6	$\overline{\text{DIM/REV}}$. Output by 8031 to define presentation of protected characters on CRT. Low is dim. High is reverse video.
P1.7	$\overline{80}$/132. Output by 8031. Selects 80-column or 132-column display.
P2.0-P2.7	Address bits 8-15 output by 8031 during bus cycles.
P3.0	RXD. Received data from AUX serial port.
P3.1	TXD. Transmitted data from 8031 to AUX port.
P3.2	$\overline{\text{INT0}}$. ($\overline{\text{BRE}\emptyset}$). Interrupt input from CRT controller during DMA transfers.
P3.3	$\overline{\text{INT1}}$. ($\overline{\text{SI}\emptyset\text{IR}}$). Interrupt input from MODEM port UART. Indicates data in the receive buffer.
P3.4	T$\emptyset$. ($\overline{\text{VTIR}}$). Timer 0 input. Generates interrupts by CRT controller.
P3.5	T1. ($\overline{\text{GRAPHICS}}$). Output by 8031 to turn on graphics interface signals.

P3.6	$\overline{WR}$. I/O Write signal output by 8031.
P3.7	$\overline{RD}$. I/O Read signal output by 8031.
RST	Reset. High input resets 8031.
EA	$\overline{External\ access}$. Low signal forces 8031 to make program fetches from external ROM.
ALE	Address latch enable. Latches multiplexed lower order address bits from data bus into address latch.
PSEN	$\overline{Program\ store\ enable}$. Enables external ROM during program fetch.

Communications Interface

Both independent serial ports [the MODEM port and the AUX (auxiliary) port] are asynchronous. The MODEM port connects to a terminal or a modem. The AUX port usually connects to a printer.

The MODEM port is implemented with a 2661-B UART. The UART derives its baud rate clock from a 4.9152 MHz crystal. The 1488 and 1489 buffers provide the voltage level conversion for interfacing RS-232 lines. Noise filtering is provided by the 220 pF capacitors.

The AUX port uses the UART in the 8031. The 11 MHz processor clock is divided internally by timer one to provide baud rates.

In addition to operating independently of the MODEM port, the AUX port may operate in a pass-thru mode. In the pass-thru mode, the data received by the MODEM port is retransmitted from the AUX port. The DTR signal received by the AUX port is passed through to the MODEM port.

Display Memory

The display memory in the terminal is dual-ported between the CRT controller and the 8031 processor. Normally, there are two 2K RAM chips installed for single-page operation.

The PCB can be expanded by one or two 8K x 8 byte RAMs, but this expansion is not supported by the firmware.

During the first scan line of each character row, the 2672 CRT controller sends an interrupt to INT0 of the 8031 nine microseconds before starting a DMA transfer from the display RAM. The 8031 may not access the display RAM while this signal is asserted. The 8031 does not stop during the DMA transfer and may service any other devices at this time.

Nonvolatile Memory

The terminal stores configuration parameters in the 100 x 14-bit nonvolatile memory. The memory operates from +12V and -23V. To generate these voltages, the monitor power/supply should receive a horizontal frequency signal 250 milliseconds before trying to read from or write to the nonvolatile RAM.

The EAROM requires a command code on the C1, C2, and C3 inputs in order to erase, read, or write. Address and data information are clocked into the EAROM through the bidirectional D pin.

The 8031 controls the EAROM through a control latch (4H on the TTL PCB, 5G on the gate array PCB). The control latch signal levels are translated by 7406 open collector inverters to the 12 volt levels required by the ER1400 EAROM. Data read out of EAROM is translated to TTL levels by a comparator before being read by the 8031 on P1.1.

Keyboard Interface

Each key on the keyboard is tested for key depression by presenting its address to a latch, then testing the line at P1.4 on the 8031. At least 6 microseconds elapse between outputting an address and testing the key return.

Debouncing and multiple key depressions are handled by the 8031.

Video Controller

The video controller consists of the dot and character clock section, the 2672 programmable video timer controller, attribute control, character font, and video shift register.

Video Clock Circuitry

A 68.85 MHz oscillator provides the basic timing for the dot clock and character clock. A 68.85 MHz crystal provides the positive feedback around a 74F04 inverter (2B,TTL; 3B, gate array). The crystal is used in a series resonant overtone mode. A T-network consisting of resistors (R3 and R44, TTL; R2 and R3, gate array) and a capacitor (C9, TTL; C11, gate array) provide DC feedback around the inverter for proper biasing while blocking AC. An inductor and capacitor (L1 and C72, TTL; L1 and C14, gate array) form a parallel resonant circuit to reduce the oscillator's feedback if it attempts to oscillate at the wrong overtone frequency. Another capacitor (C8 on both boards) provides an AC path to ground for the resonant circuit.

The output from the oscillator is buffered by another 74F04 and then applied to a divider (2A, TTL; 3A, gate array). The divider circuit divides by 2 for 132-column operation or by 3 for 80-

column operation. The dot clock from the divider goes to the video shift register and the character clock generator.

The character clock generator consists of a Johnson counter (3B, 4B, and 3A, TTL; 4A, 4B, and 5A, gate array) which divides the dot clock by 10 in 80-column mode and by 9 in 132-column mode. The character clock generator also provides a properly phased load enable signal for the video shift register.

Programmable Video Controller

The 2672 programmable video timing controller (PVTC) provides all the timing and control signals for displaying characters on the CRT (3J). The 8031 initializes the 2672 with the display parameters when a user turns the terminal ON. Before each displayable character row, the 8031 gives the 2672 the beginning character address for that row. The 2672 fetches characters from the display RAM during the first scan line of each displayable character row. During the following 12 scan lines the characters are retrieved from the row buffer.

The 2672 warns the 8031 of an impending DMA transfer by asserting BREQ 9 microseconds before the DMA transfer begins. After 9 microseconds, the 2672 asserts memory bus control (MBC) which ports the display RAM into the row buffer RAM and disconnects the display RAM from the 8031 bus. Since the DMA transfers do not stop the 8031, there is an additional 1.17 milliseconds of program execution time available during each video frame (26 row x 45 microseconds horizontal period).

In addition to providing the character addressing, the 2672 also generates the scan line count and attribute control signals. The scan line count, blink rate, and underscore signals are multiplexed on the 2672's character address lines. At the beginning of each scan line these multiplexed signals are clocked by the falling edge of the blank signal into a latch (4D).

Attribute Control

Attribute control determines the way the CRT displays characters. There are five attributes: blink, blank, underscore, reverse, and dim. Reverse and dim are hidden, the attribute is not embedded in the display data and doesn't occupy a character location. The rest of the attributes are "not hidden." Not hidden means that the attribute is embedded in the display data and occupies a character location on the screen.

As data is presented to the character generator (3D, TTL; inside the gate array), it is simultaneously decoded by the attribute controller to determine if it is display data or an attribute. If bit 7 is high and bits 6 and 5 are low, then the data byte is interpreted as an attribute byte.

Here are the attribute bit assignments:

Bit	Value			
7	1	*		
6	0	*	Indicates byte is an attribute.	
5	0	*		
4	A	Reverse Video	1-ON	0-OFF
3	B	Underscore	1-ON	0-OFF
2	C	Blank	1-ON	0-OFF
1	D	Blink	1-ON	0-OFF
0	E	Dim	1-ON	0-OFF

If a data byte is an attribute, it is routed through multiplexed 5D, 5A, 6A, and 7A into the current attribute latch 6C on the TTL PCB. The data byte is routed through the gate array on the gate array PCB. A new attribute always replaces the previous one and affects all the following displayed data until the next attribute is encountered. Whenever a new attribute is latched, the shift register (2C, 3C, and 4C, TTL; 3C, 4C, and 5C, gate array) is inhibited from loading the contents of the character font (3D); therefore, the screen location of an attribute is always blank (video off).

The outputs of the current attribute latch (6C, TTL; within the gate array) are decoded to create the different attributes. Blank and blink are created by inhibiting the shift register from loading. Underscore is exclusive OR'd with the reverse and cursor functions, and the shift register load is inhibited.

The reverse video functions (cursor, underscore, reverse, character) are exclusive OR'd with the serial video bit stream.

At the beginning of the first scan line of each character row, the attribute latch (6D, TTL; within the gate array) is loaded from the attribute latch (6C, TTL; within the gate array). This allows the last active attribute of each character row to propagate to subsequent character rows until a new attribute is encountered. Memory bus control (MBC) from the 2672 PVTC causes this transfer. At the beginning of every scan line (including the first scan line), the current attribute latch (6C, TTL; within the gate array) is loaded from the row attribute latch (6D, TTL; within the gate array). This action restores the current attribute latch to the initial value for this character row.

The attribute controller also detects protected characters and displays them as dim, reverse, or normal. A protected character is detected when D7 is 1 and either D6 or D5 (or both) is also 1.

Character Generator

Each character cell is 10 dots (80-column) or 9 dots (132-column) wide by 13 scan lines high.

A 200ns 2732A EPROM stores the font. Address bits (A0 through A3) select the appropriate pattern for the current scan line. Address bits (A4 through A10) select the 128 ASCII and line drawing characters when A11 is low. A11 controls the lower or upper 128 characters select. Both lower and upper shift have the same characters. The firmware can select A11 for the protect attribute. This makes normal video one of the protect options.

Row Buffer Diagnostic Register

The row buffer diagnostic register (4E, TTL; 4H, gate array) latches data during DMA transfers. At the end of a DMA transfer, this register contains the last byte of the transfer. The CPU can read this byte before the next transfer.

Video Shift Register

The video shift register (2C, 3C, and 4C, TTL; 3C, 4C, and 5C, gate array) provides the serial bit stream to the video input of the monitor/power supply PCB. The shift register is controlled by the attribute control section by a single signal. The shift register can parallel load from the character font or it can shift right. Whenever the register shifts data out to the right, it also shifts in zeros from the left. In this way the shift register is automatically cleared to all zeros at the end of each character boundary. To create a blank character cell on the CRT, it is only necessary to inhibit the register from loading during that character cell boundary.

The output from the shift register goes to a dot stretcher composed of NPN transistor Q2 (Q3, gate array) and capacitor C30 (C61, gate array). The dot stretcher extends the on-time of the video dots so that vertical columns of single dots appear in equal intensity to the horizontal strings of dots.

After the dot stretcher, the video goes to an exclusive OR gate (7D, TTL; 6E, gate array) that creates reverse video for the cursor and reverse attributes. The video is next OR'd with any external video input (5E, TTL; 7E, gate array). Finally, the video is gated with the blanking signal (7G, TTL; 6C, gate array) from the CRT controller.

APPENDIX A SPECIFICATIONS

PHYSICAL

Dimensions	Video Module: 12"H x 12.3"W x 13"D (30.48cm x 31.24cm x 33.02cm) Video Module Base: 1.25"H x 12.25"W x 10.25"D (3.20cm x 31.12cm x 26.04cm) Keyboard: 2.25"H x 17.25"W x 7.6"D (5.72cm x 43.82cm x 19.3cm)
Net Weight	30 lbs. (13.5kg approx.)
Finish	Two-tone gray

CRT

Size	14" diagonal (35.56cm)
Display	Nonglare, P138 green phosphor Swivel: 270 degrees Tilt: 15 degrees
Screen Format	80 or 132 columns (user selectable) 26 rows (two rows for terminal status and function key identification)
Character Matrix	80 column: 7 x 13 matrix, 10 x 13 cell 132 column: 7 x 13 matrix, 9 x 13 cell
Character Set	128 characters (96 displayable ASCII characters, 16 control code symbols, and 16 graphics characters)
Language Keyboard Codes	US (American), UK (British), French, German, Spanish, Danish
Video Attributes	Normal, dim, blink, blank, underline, and reverse
Horizontal Frequency	22.9 KHz
Video Bandwidth	17.0 MHz

Total Active Scan Lines	338
Total Scan Lines	375
Total Pixel Resolution	800 by 338
Cursor	Block or line Blinking or nonblinking (user selectable)
Memory	One page

KEYBOARD

Type	Low-profile detached, with 6-foot coiled cable (1.83m) Two-position tilt (low postition meets DIN specification)
Keys	101, including 16 programmable function keys (shiftable to 32), and numeric keypad. N-key rollover with ghost key lockout

COMMUNICATIONS

Ports	Two independent EIA RS-232C interfaces
Mode	Asynchronous TTY compatible (block and conversational)
Baud Rates	MODEM: 50, 75, 110, 134.5, 150, 300 600, 1200, 1800, 2000, 2400, 4800, 9600, 19.2K, 38.4K bps AUX: 110, 134.5, 150, 300, 600, 1200, 1800, 2000, 2400, 3600, 4800, 7200, 9600, 19.2K bps
Bit Length	7 or 8 bits (user selectable)
Stop Bits	1 or 2 (user selectable)
Parity	Odd, even, mark, or none (user selectable)
Handshake Protocols	

MODEM port	XON/XOFF, DTR, both, or none
AUX port	DTR only

COMPATIBILITY

Native Mode	Wyse WY-100, Lear Siegler ADM-31
Compatible Mode	TeleVideo 910, 920, 925 ADDS Viewpoint Hazeltine 1500

POWER

Fuse	2a, 250V
Standard	90 to 130 VAC 60 Hz ± 5%
Optional	200 to 240 VAC 50 Hz ± 5%
Power	45 watts

Power Available	With Logic	Without Logic
+5V	500 ma	2000 ma
+12V	100 ma	200 ma
-12V	100 ma	200 ma
-23V	20 ma	40 ma

LOGIC

CPU	8031, 11 MHz
PUTC	2762
UART	2661

ENVIRONMENT

Temperature	Operating: 32 to 113 degrees F (10 to 40 degrees C) Storage: -40 to +140 degrees F (-40 to +60 degrees C)
Humidity	10% to 90% relative, noncondensing
Altitude	Sea level to 15,000 feet (0 to 4,572m)

APPENDIX B CONNECTOR PIN ASSIGNMENTS

The MODEM and AUX (auxiliary) port connector pin assignments are listed below.

MODEM RS-232C (DTE)

	Pin No.	Signal
	1	Shield Ground
	2	Transmit Data (output)
	3	Receive Data (input)
	4	Request to Send (output)
*	5	Clear to Send (input)
	6	Not Used
	7	Signal Ground
*	8	Data Carrier Detect (input)
**	9	
	10	Not Used
	11	Not Used
	12	Not Used
**	14	
**	18	
	19	
	20	Data Terminal Ready (output)
**	24	
**	25	

* Don't connect these pins. If they receive low signals, the terminal will not operate.

AUX RS-232C (DCE)

Pin No.	Signal
1	Shield Ground
2	Transmit Data (input, not used)
3	Receive Data (output)
4	Request to Send (input, not used)
5	Clear to Send (output, not used)
6	Data Set Ready (output)
7	Signal Ground
8	Data Carrier Detect (output, not used)
***20	Data Terminal Ready (input)

** Leave these pins unconnected, they carry graphics input for the WY-1000.

*** For handshaking purposes. Busy/Ready Protocol:

Busy:	-3 to -12 V
Ready:	+3 to +12 V

APPENDIX C SCHEMATICS

This appendix contains schematic diagrams for the logic and monitor/power supply PCB. Use them to help you troubleshoot the terminal.

Schematic	Location
Keyboard, WY-50 96-013-01, 1 of 1	C-2
Logic Board, WY-50 96-012-01, 0 of 7	C-3
Logic Board, WY-50 96-012-01, 1 of 7	C-4
Logic Board, WY-50 96-012-01, 2 of 7	C-5
Logic Board, WY-50 96-012-01, 3 of 7	C-6
Logic Board, WY-50 96-012-01, 4 of 7	C-7
Logic Board, WY-50 96-012-01, 5 of 7	C-8
Logic Board, WY-50 96-012-01, 6 of 7	C-9
Logic Board, WY-50 96-012-01, 7 of 7	C-10
Logic Board, WY-50 Gate Array Version 96-018-01, 1 of 2	C-10
Logic Board, WY-50 Gate Array Version 96-018-01, 2 of 2	C-11
Monitor/Power Supply, WY-50 96-019-01, 1 of 1	C-12

DWG. NO.	SH	REV.

REV 3 Change Pullups to 4.7K Ω M. Bell 6-24-83

REVISIONS

REV.	DESCRIPTION	DATE	APPROVED
2	Add Comma key	5/14/83	M. Bell

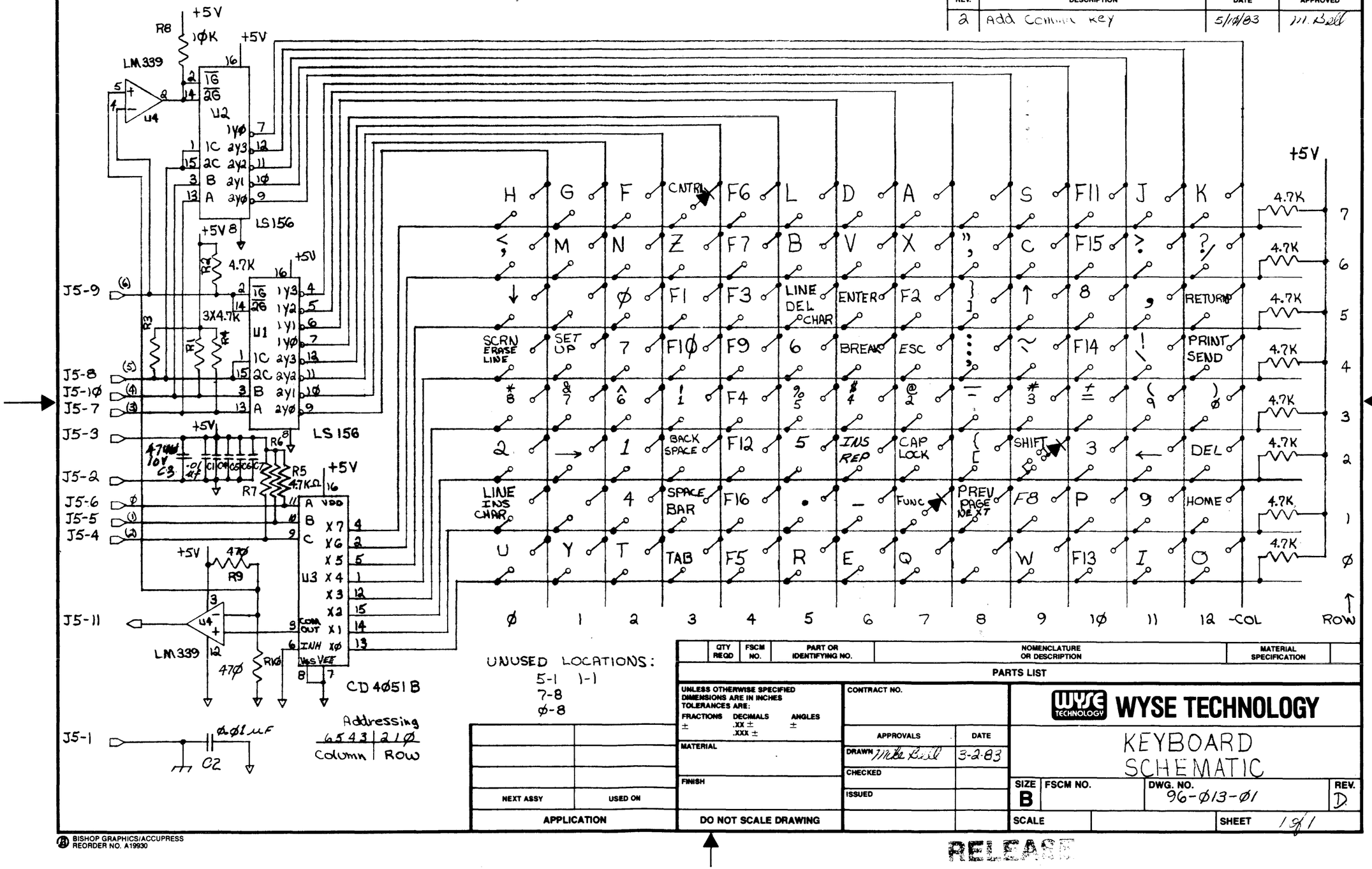

QTY REQD	FSCM NO.	PART OR IDENTIFYING NO.	NOMENCLATURE OR DESCRIPTION	MATERIAL SPECIFICATION

PARTS LIST

NEXT ASSY	USED ON
APPLICATION	

UNLESS OTHERWISE SPECIFIED DIMENSIONS ARE IN INCHES
TOLERANCES ARE:
FRACTIONS ± DECIMALS .XX ± .XXX ± ANGLES ±

MATERIAL

FINISH

DO NOT SCALE DRAWING

CONTRACT NO.

APPROVALS	DATE
DRAWN Mike Bell	3-2-83
CHECKED	
ISSUED	

WYSE TECHNOLOGY

KEYBOARD SCHEMATIC

SIZE	FSCM NO.	DWG. NO.	REV.
B		96-Ø13-Ø1	D

SCALE | SHEET 1 of 1

RELEASED

BISHOP GRAPHICS/ACCUPRESS
REORDER NO. A19930

DWG. NO.	SH	REV.

REVISIONS

REV.	DESCRIPTION	DATE	APPROVED
B	Rev Dot CLK Oscillator, Inhibit H-Sync on Pwr-up Replace cclk w/ Dot CLK on graphics Interface	6-28-83	M. Bell
C	Add 5.1V Zener & 100Ω Res to EAROM CKT.	7/83	M. Bell
D	Add 1 ply to H-Sync Separate GND for Video to monitor.	9/8/83	M. Bell
D1	change R5, R24, R25 to 12K ohm 1/4W 5%	12/5/83	RD
D2	Remove Sockets, 3L, 3J, 6J	"	
D3	Loration 3F changed to 1K x 8 static Ram Sy2158A	"	

QTY REQD	FSCM NO.	PART OR IDENTIFYING NO.	NOMENCLATURE OR DESCRIPTION	MATERIAL SPECIFICATION

PARTS LIST

NEXT ASSY	USED ON
APPLICATION	

UNLESS OTHERWISE SPECIFIED DIMENSIONS ARE IN INCHES
TOLERANCES ARE:
FRACTIONS ± DECIMALS .XX ± .XXX ± ANGLES ±

MATERIAL

FINISH

DO NOT SCALE DRAWING

CONTRACT NO.

APPROVALS	DATE
DRAWN M. Bell	6-28-83
CHECKED	
ISSUED	

WYSE TECHNOLOGY

LOGIC BOARD, WY-50

SIZE	FSCM NO.	DWG. NO.	REV.
B		96-012-01	D3

SCALE | SHEET 0 of 7

BISHOP GRAPHICS/ACCUPRESS
REORDER NO. A19830

Figure 7-3 Terminal PCB Schematic (Monitor/Power Supply)

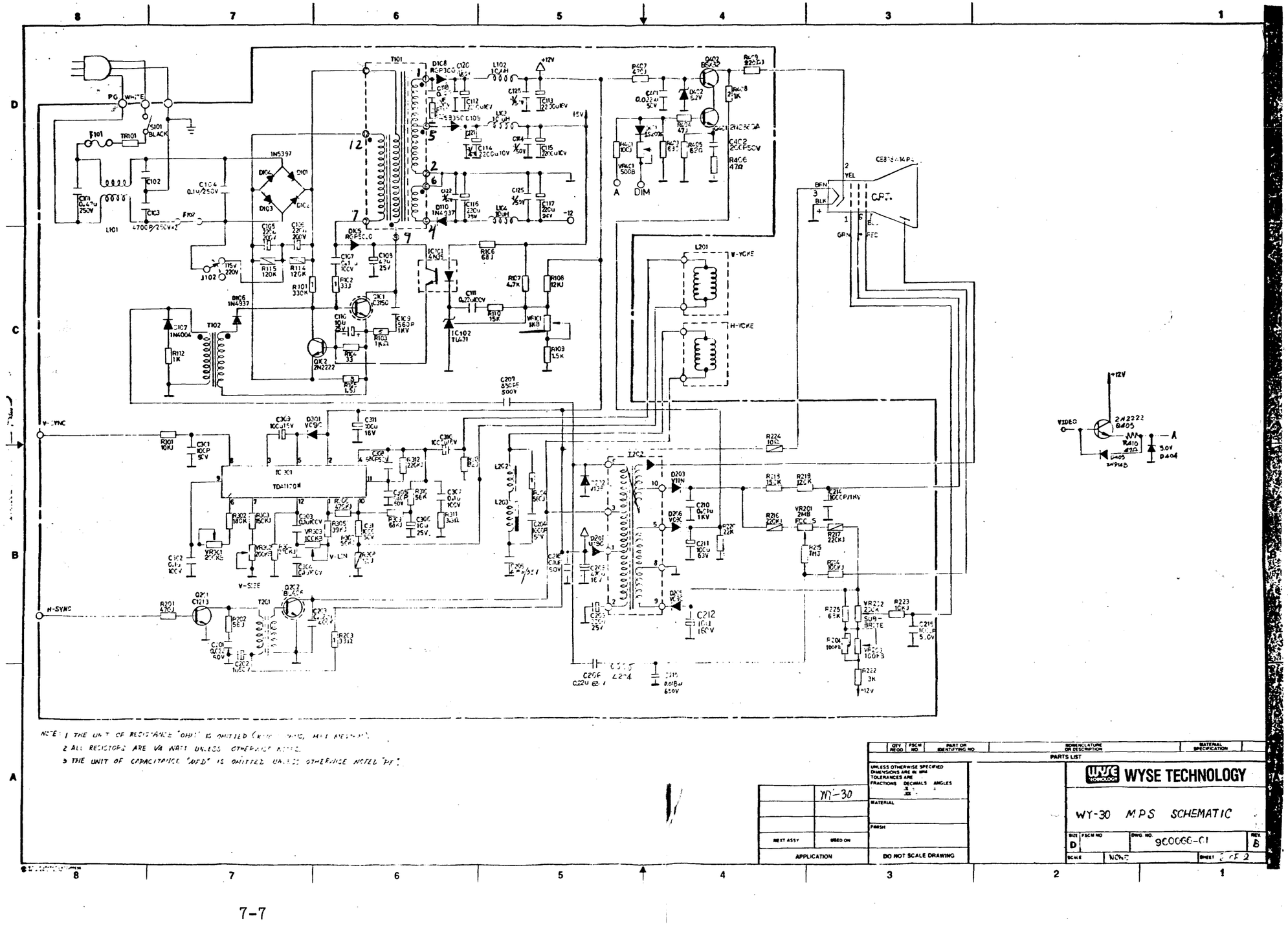

NOTES: 1 THE UNIT OF RESISTANCE "OHM" IS OMITTED (K=KILOHM, M=MEGOHM).
2 ALL RESISTORS ARE 1/4 WATT UNLESS OTHERWISE NOTED.
3 THE UNIT OF CAPACITANCE "MFD" IS OMITTED UNLESS OTHERWISE NOTED "PF".

DWG. NO.	SH	REV.

REVISIONS

REV.	DESCRIPTION	DATE	APPROVED

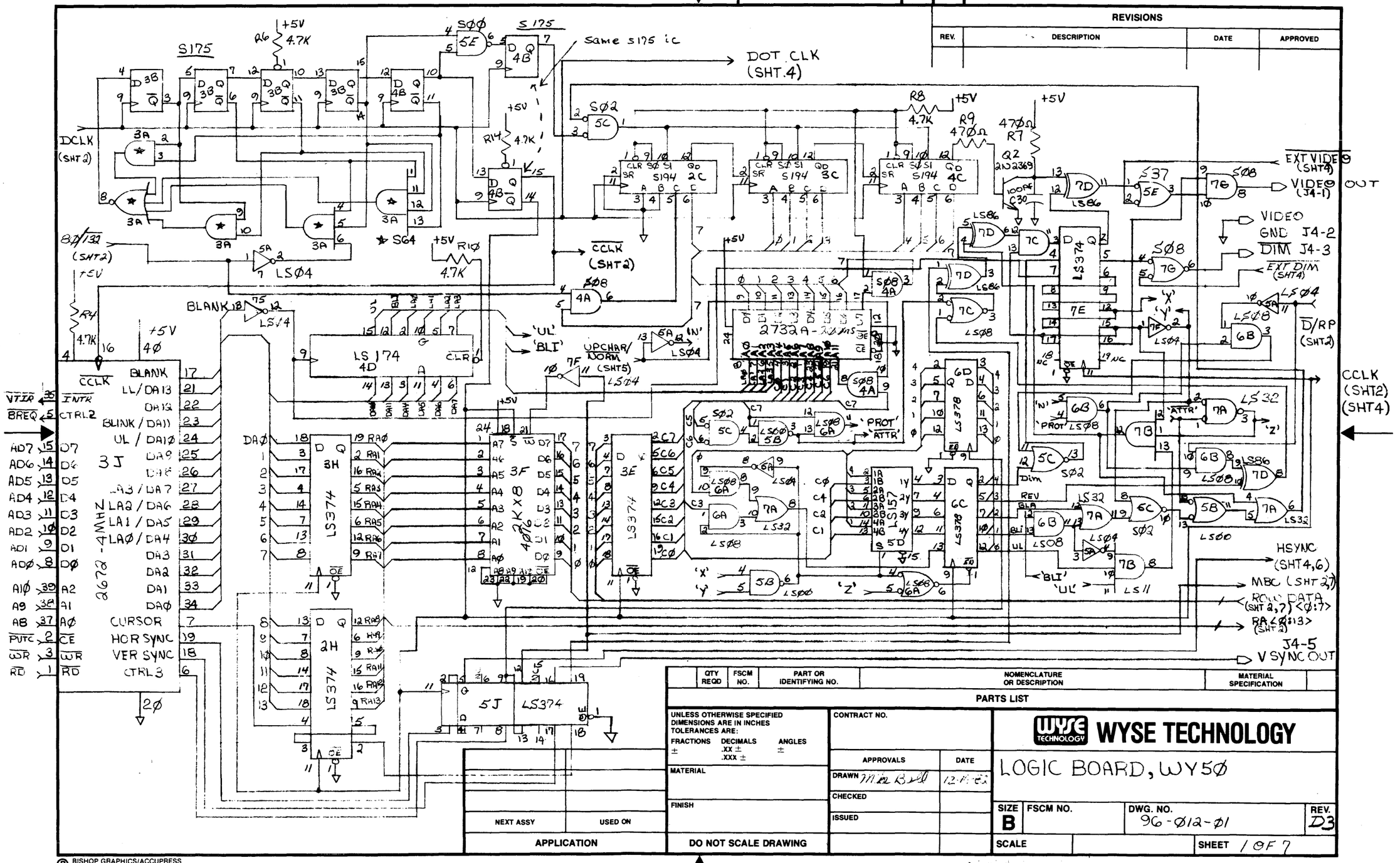

QTY REQD	FSCM NO.	PART OR IDENTIFYING NO.	NOMENCLATURE OR DESCRIPTION	MATERIAL SPECIFICATION

PARTS LIST

UNLESS OTHERWISE SPECIFIED DIMENSIONS ARE IN INCHES
TOLERANCES ARE:
FRACTIONS ± DECIMALS .XX ± .XXX ± ANGLES ±

MATERIAL

FINISH

NEXT ASSY | USED ON

APPLICATION

DO NOT SCALE DRAWING

CONTRACT NO.

APPROVALS	DATE
DRAWN Mike Bell	12-11-83
CHECKED	
ISSUED	

WYSE TECHNOLOGY

LOGIC BOARD, WY50

SIZE	FSCM NO.	DWG. NO.	REV.
B		96-012-01	D3

SCALE | SHEET 1 OF 7

BISHOP GRAPHICS/ACCUPRESS
REORDER NO. A19930

DWG. NO.	SH	REV.

REVISIONS

REV.	DESCRIPTION	DATE	APPROVED

NOTES:
1. 1/4 LS157 ONLY LOADED W/ 8KX8 RAM. NORMALLY OMITTED.
2. LAYOUT RAM AREA FOR 2KX8 OR 8KX8. (OKI MSM 5188RS/AS - 28 PIN) USE TRACE IN 2KX8 JUMPER POSITION.
3. PROGRAM EPROM CAN BE 4KX8, 8KX8 OR 16KX8.

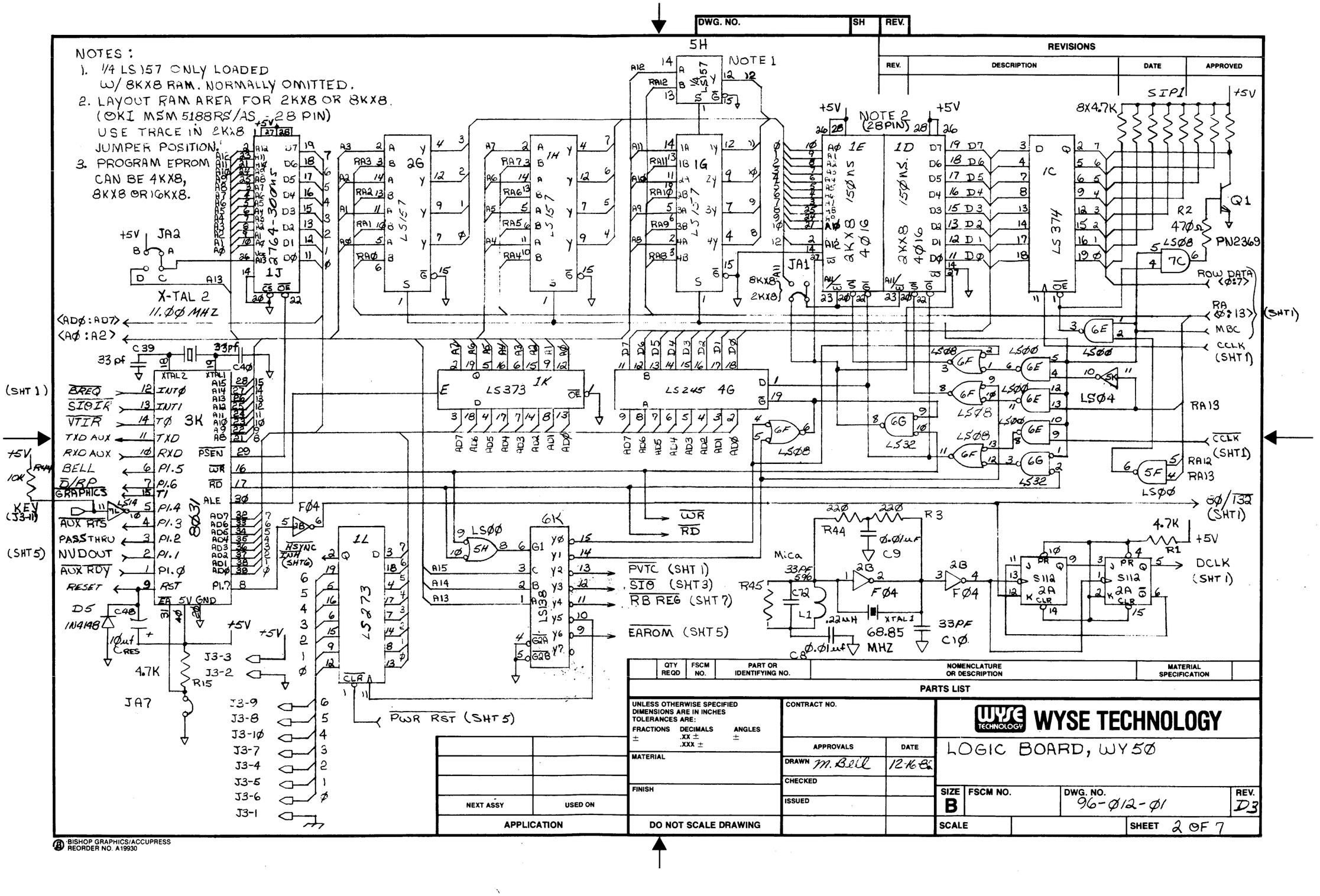

QTY REQD	FSCM NO.	PART OR IDENTIFYING NO.	NOMENCLATURE OR DESCRIPTION	MATERIAL SPECIFICATION

PARTS LIST

NEXT ASSY	USED ON

APPLICATION

UNLESS OTHERWISE SPECIFIED DIMENSIONS ARE IN INCHES
TOLERANCES ARE:
FRACTIONS ± DECIMALS .XX ± .XXX ± ANGLES ±

MATERIAL

FINISH

DO NOT SCALE DRAWING

CONTRACT NO.

APPROVALS	DATE
DRAWN M. Bell	12-16-82
CHECKED	
ISSUED	

WYSE TECHNOLOGY

LOGIC BOARD, WY50

SIZE	FSCM NO.	DWG. NO.	REV.
B		96-Ø12-Ø1	D3

SCALE

SHEET 2 OF 7

BISHOP GRAPHICS/ACCUPRESS
REORDER NO. A19930

NOTES:
1. MOUNT LED NEAR PCB EDGE.
2. FOR ZERO ERROR AT 19,200 BAUD.
SUBSTITUTE 2661B & 4.9152 MHZ X-TAL.
MAX BAUD RATE WILL BECOME 38,400.
3. LS157 : COMMON

J1: 25 Pin D MODEM PORT
J2: 25 Pin D PRINTER PORT

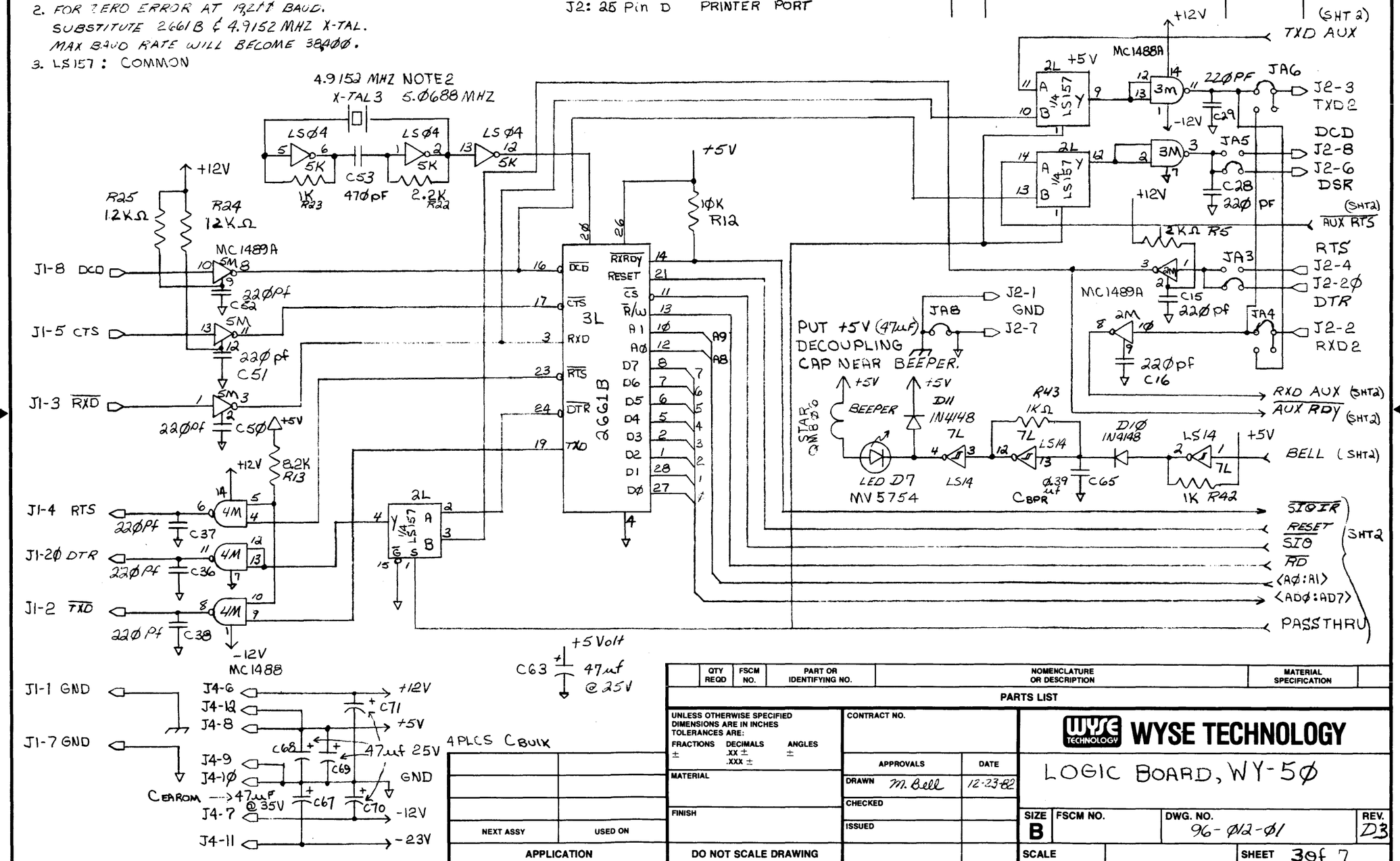

DWG. NO.	SH	REV.

REVISIONS

REV.	DESCRIPTION	DATE	APPROVED

QTY REQD	FSCM NO.	PART OR IDENTIFYING NO.	NOMENCLATURE OR DESCRIPTION	MATERIAL SPECIFICATION

PARTS LIST

NEXT ASSY	USED ON

APPLICATION

UNLESS OTHERWISE SPECIFIED DIMENSIONS ARE IN INCHES TOLERANCES ARE:
FRACTIONS ± DECIMALS .XX ± .XXX ± ANGLES ±

MATERIAL

FINISH

DO NOT SCALE DRAWING

CONTRACT NO.

APPROVALS		DATE
DRAWN	M. Bell	12-23-82
CHECKED		
ISSUED		

WYSE TECHNOLOGY

LOGIC BOARD, WY-50

SIZE	FSCM NO.	DWG. NO.	REV.
B		96-012-01	D3

SCALE

SHEET 3 of 7

BISHOP GRAPHICS/ACCUPRESS REORDER NO. A19930

DWG. NO.	SH	REV.

REVISIONS

REV.	DESCRIPTION	DATE	APPROVED
A	Removed Blank & CCLK. Added 1488 drivers.	1-26-89	M. Bell

NOTES:
1. HSYNC-, VSYNC-, Require RS232C Receivers.
2. DIM- & VIDEO- Require S37 Drivers.
3. VIDEO- (J1-18) corresponds to Green-output on RGB Graphics controller. Red-(J1-11) & Blue-(J1-19) are not used on WY-50.
4. Red-, Green-, Blue- require S37 Driver. Both transmit & receive ends of Blue-(J1-19) require diode clamps

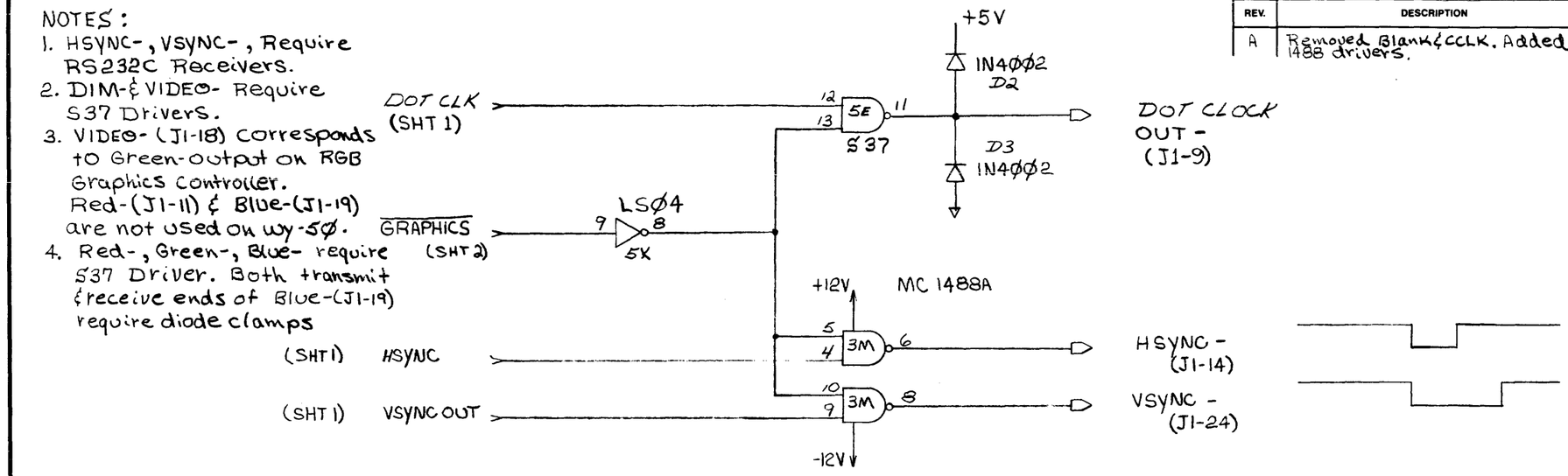

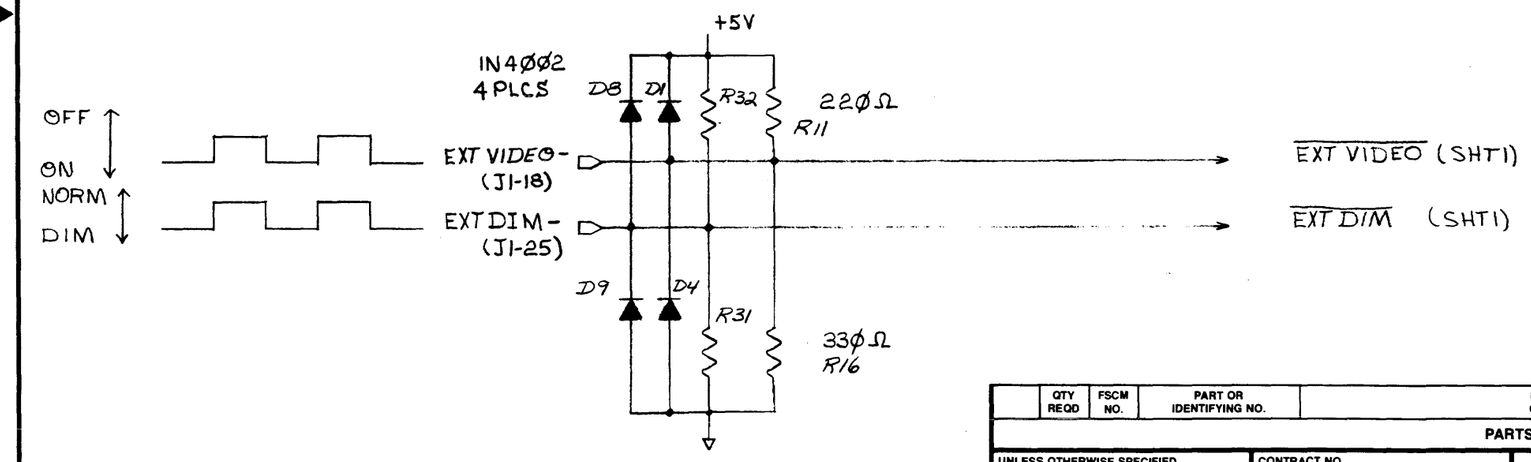

GRAPHICS INTERFACE

QTY REQD	FSCM NO.	PART OR IDENTIFYING NO.	NOMENCLATURE OR DESCRIPTION	MATERIAL SPECIFICATION

PARTS LIST

NEXT ASSY	USED ON
APPLICATION	

UNLESS OTHERWISE SPECIFIED DIMENSIONS ARE IN INCHES
TOLERANCES ARE:
FRACTIONS ± DECIMALS .XX ± .XXX ± ANGLES ±

MATERIAL

FINISH

DO NOT SCALE DRAWING

CONTRACT NO.

APPROVALS	DATE
DRAWN M. Bell	1-24-89
CHECKED	
ISSUED	

WYSE TECHNOLOGY

LOGIC BOARD, W50

SIZE	FSCM NO.	DWG. NO.	REV.
B		96-012-01	D3

SCALE

SHEET 4 OF 7

BISHOP GRAPHICS/ACCUPRESS
REORDER NO. A19930

DWG. NO.	SH	REV.

REVISIONS			
REV.	DESCRIPTION	DATE	APPROVED

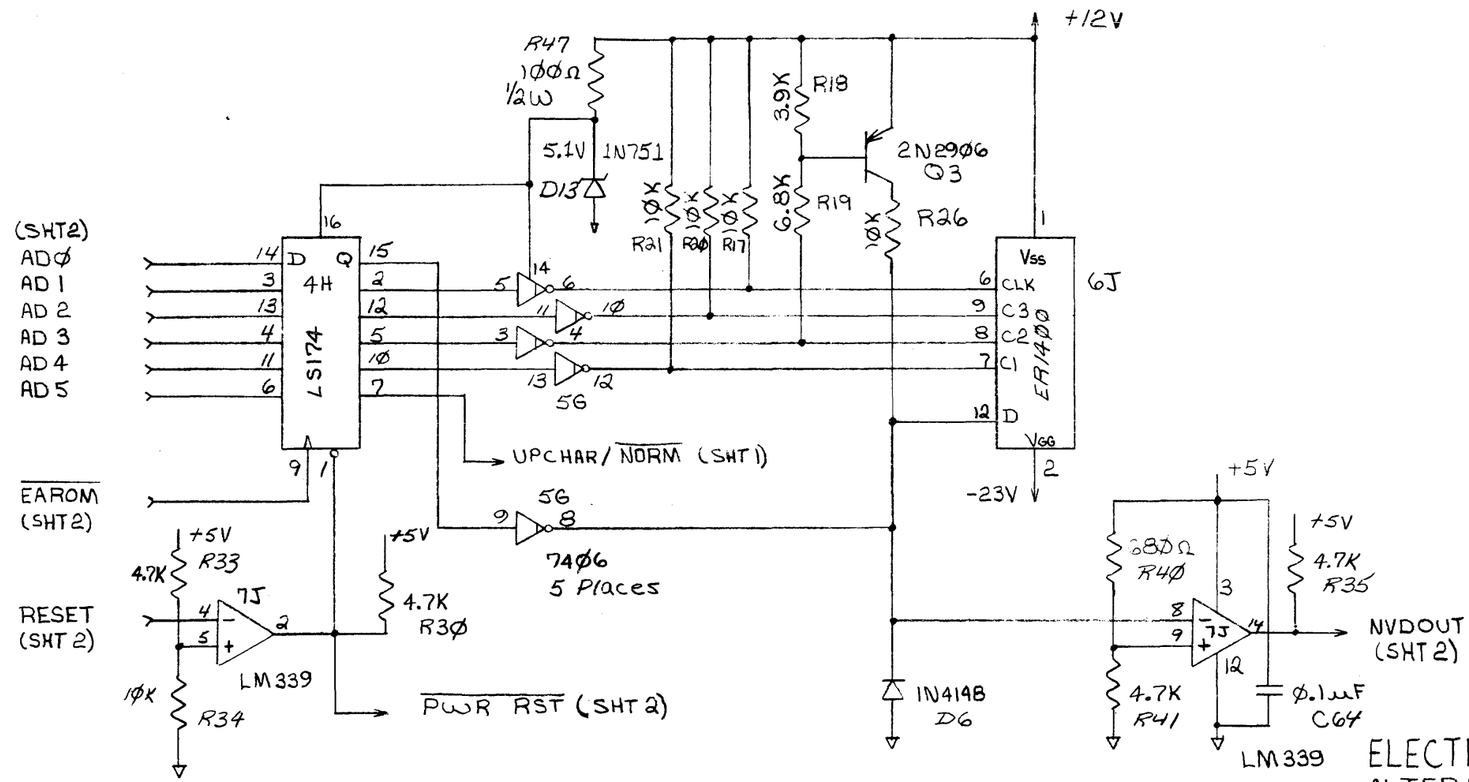

ELECTRICALLY ALTERABLE ROM
100 X 14 bit.

	QTY REQD	FSCM NO.	PART OR IDENTIFYING NO.	NOMENCLATURE OR DESCRIPTION	MATERIAL SPECIFICATION

PARTS LIST

NEXT ASSY	USED ON		
APPLICATION			

UNLESS OTHERWISE SPECIFIED DIMENSIONS ARE IN INCHES
TOLERANCES ARE:
FRACTIONS ± DECIMALS .XX ± .XXX ± ANGLES ±

MATERIAL

FINISH

DO NOT SCALE DRAWING

CONTRACT NO.

APPROVALS	DATE
DRAWN M. Bell	2-24-82
CHECKED	
ISSUED	

WYSE TECHNOLOGY

LOGIC BOARD, WY50

SIZE	FSCM NO.	DWG. NO.	REV.
B		96-Ø12-Ø1	D3

SCALE | SHEET 5 OF 7

BISHOP GRAPHICS/ACCUPRESS
REORDER NO. A19930

DWG. NO.	SH	REV.

REVISIONS			
REV.	DESCRIPTION	DATE	APPROVED

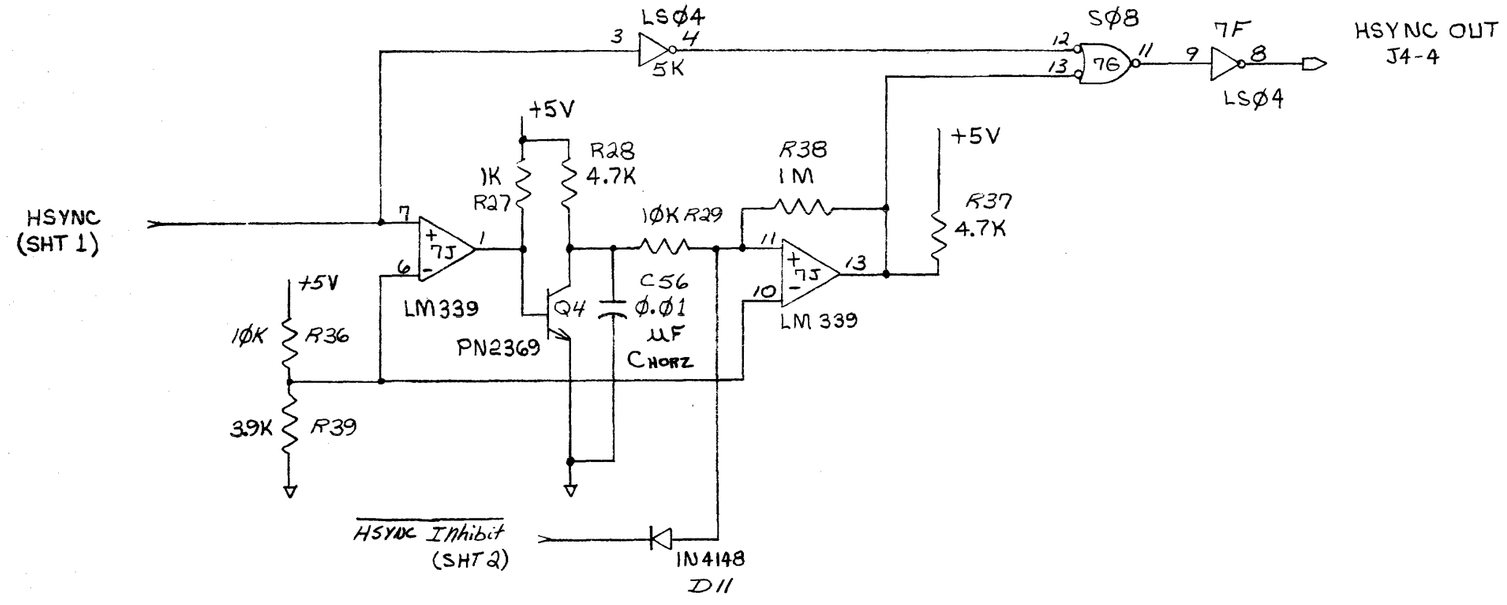

HSYNC STRETCHER

	QTY REQD	FSCM NO.	PART OR IDENTIFYING NO.	NOMENCLATURE OR DESCRIPTION	MATERIAL SPECIFICATION	

PARTS LIST

NEXT ASSY	USED ON
APPLICATION	

UNLESS OTHERWISE SPECIFIED DIMENSIONS ARE IN INCHES
TOLERANCES ARE:
FRACTIONS ± DECIMALS .XX ± .XXX ± ANGLES ±

MATERIAL

FINISH

DO NOT SCALE DRAWING

CONTRACT NO.

APPROVALS	DATE
DRAWN M. Bill	2-24-[illegible]
CHECKED	
ISSUED	

WYSE TECHNOLOGY

LOGIC BOARD, WY 5Ø

SIZE	FSCM NO.	DWG. NO.	REV.
B		96-Ø12-Ø1	D3

SCALE

SHEET 6 of 7

BISHOP GRAPHICS/ACCUPRESS
REORDER NO. A19930

DWG. NO.	SH	REV.

REVISIONS

REV.	DESCRIPTION	DATE	APPROVED

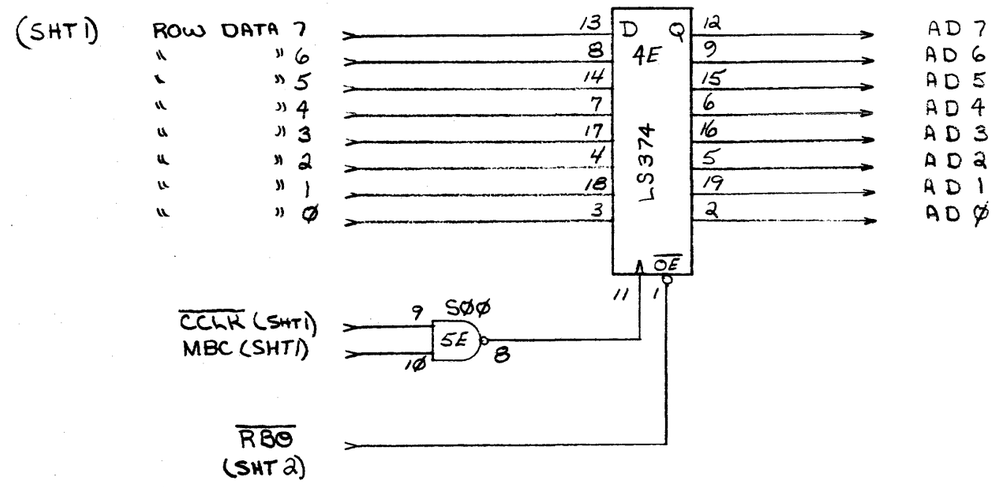

ROW BUFFER DIAGNOSTIC REGISTER

	QTY REQD	FSCM NO.	PART OR IDENTIFYING NO.	NOMENCLATURE OR DESCRIPTION	MATERIAL SPECIFICATION	

PARTS LIST

NEXT ASSY	USED ON
APPLICATION	

UNLESS OTHERWISE SPECIFIED DIMENSIONS ARE IN INCHES
TOLERANCES ARE:
FRACTIONS ± DECIMALS .XX ± .XXX ± ANGLES ±

MATERIAL

FINISH

DO NOT SCALE DRAWING

CONTRACT NO.

APPROVALS	DATE
DRAWN M. Bell	3-3-83
CHECKED	
ISSUED	

WYSE TECHNOLOGY

LOGIC BOARD, WY50

SIZE	FSCM NO.	DWG. NO.	REV.
B		96-Ø12-Ø1	D3

SCALE | SHEET 7 of 7

BISHOP GRAPHICS/ACCUPRESS
REORDER NO. A19930

DWG. NO.	SH	REV.

REVISIONS

ZONE	REV.	DESCRIPTION	DATE	APPROVED
C4	B	Connect pin13 of 26LS18 to 3K-25(BBH)	2-2-84	M. Bell

1. MOUNT LED NEAR PCB EDGE
2. LS 157 = COMMON
3. All JUMPERS (JP) .1" SPACING.
   TRACE ON SOLDER SIDE.

J1 MODEM PORT 25 PIN DB SOCKET

J1-8 DCD — 12K R20, 12K R21, MC 1489A, 22ØPF C56
J1-5 CTS — MC 1489A, 22ØPF C54
J1-3 RXD — MC 1489A, 22ØPF C53
J1-4 RTS — 22ØPF C39, MC1488, 4.7K
J1-20 DTR — 22ØPF C38, MC1488
J1-2 TXD — 22ØPF C41, MC1488, -12V
J1-1 GND — JP8
J1-7 GND

4.9152 MHz Y-TAL 3
LS04, C55, LS04, LS04, 5K, 1K R19, 470 PF, 2.2K R18

+5V, 4.7K R16, J3-11 KEY, 7L LS14

11.Ø MHz XTAL2, 33PF C40, 33PF C42

BREQ (SHT1)
VIZR (SHT1)
REV/DTR ADJ (SHT1)
GRAPHICS (SHT1)
ØØ/13Ø (SHT1)
3B, F Ø4

3K
Inv Ø
T Ø
P1.6
T1
P1.4
P1.7
INT1
P1.2
TXD
P1.3
P1.Ø
RXD
P1.5
P1.1
RST
ALE
AD7
AD6
AD5
AD4
AD3
AD2
HDI
AD Ø
A15
A14
A13
A12
A11
A10
A9
A8
PSEN
WR
RD

SIØZA
PASS THRU
AUX TXD
AUX RTS
AUX RDY
AUX RXD
BEEPER
NVDOUT (A-2)

+5V, 10K R12, 4.7K R15, JP7, C50

3L 8256 — RXCO, DCD, CTS, RESET, RXD, RTS, DTR, TXD, D7–D Ø, A15–A Ø, CS, R/W
SIØ (SHT1)
AD7 6 5 4 3 2 1 Ø

1/4 LS157 — 2L, 3L

J2 PRINTER PORT 25 PIN DB SOCKET

J2-3 TXD2 — JP6, C29 22ØPF, MC1488, 1/4 LS157
J2-8 DCD2 / J2-6 DSR2 — JP5, C28 22ØPF, MC1488, 1/4 LS157
J2-4 RTS2 / J2-20 DTR2 — JP3, +12V, 12K R8, MC1489A, C15 22ØPF
J2-2 RXD2 — JP4, MC1489A, 22ØPF C16
J2-1 GND
J2-7 GND

J4-6, J4-12, J4-8, J4-9, J4-13, J4-7, J4-11 — C75, C72, C73, 47 uF @ 25V - 4 PLCS C BULK, +5V, GND, C71 .1 uF Ceramic Capacitor, C74, -12V, -23V

R48 1K Ω, RV7 1K Ω, IN4148 D12, .Ø39 uF C69, STAR QMB Ø6 BEEPER, LED MV5754 D11, PLACE NEAR J4, D10 IN4148, 47 uF @ 25V C62

EARON (SHT1)
RESET REF (SHT1)
FONT 2 / NORM (SHT1)
NVDOUT (C-5)

+5V, 4.7K R35, 8.2K R5Ø, LM339, 7J

+5V, JP6, +trace, AD7, 2764-300ns 28 Pin, 1J

+5V, 4.7K R40, 68Ø Ω R45, 4.7K R46, IN4148 D6, .Ø1 uF C68, LM339

+5V, 68 Ω R54, IN747A D14, 18K R53, 33 Ω R55, 2N2Ø7Ø Q6, Q5 2N3Ø4Ø, 3.9K R52, -23V

+5V, 1Ø Ω ½ W R49, IN751 5.1 Volt D13, C47 .Ø1 uF, 3.3K R27, 2N2Ø7Ø Q2, 18K R22, 1K R25, 2K R23, 6.8K R24, 18K R26, 12K R51, 5X 74Ø6 5H, LS174 5G, ER1400 14 Pin 5J

AD Ø, AD1, AD2, AD3, AD4, AD5

HSYNC CLAMP (SHT2)
J3-9, J3-8, J3-10, J3-7, J3-4, J3-5, J3-6
J3 KEYBOARD
+5V, J3-3, J3-2, J3-1
KEYBRD (SHT1)

WR (SHT1)
RD (SHT1)
<AD Ø : AD7> (SHT1
<A Ø : A15> (SHT1)

QTY REQD	FSCM NO.	PART OR IDENTIFYING NO.	NOMENCLATURE OR DESCRIPTION	MATERIAL SPECIFICATION

PARTS LIST

UNLESS OTHERWISE SPECIFIED DIMENSIONS ARE IN INCHES
TOLERANCES ARE:
FRACTIONS ± DECIMALS .XX ± .XXX ± ANGLES ±

MATERIAL
FINISH
NEXT ASSY | USED ON
APPLICATION
DO NOT SCALE DRAWING

CONTRACT NO.

APPROVALS	DATE
DRAWN Mike Bell	5/14/83
CHECKED	
ISSUED	

WYSE TECHNOLOGY

LOGIC BOARD, WY5Ø
GATE ARRAY VERSION

SIZE D | FSCM NO. | DWG. NO. 96-Ø18-Ø1 | REV. C1
SCALE | SHEET 2 OF 2

IF THERE IS NO -23 V ER1400 NOT GETTING ADDRESSED

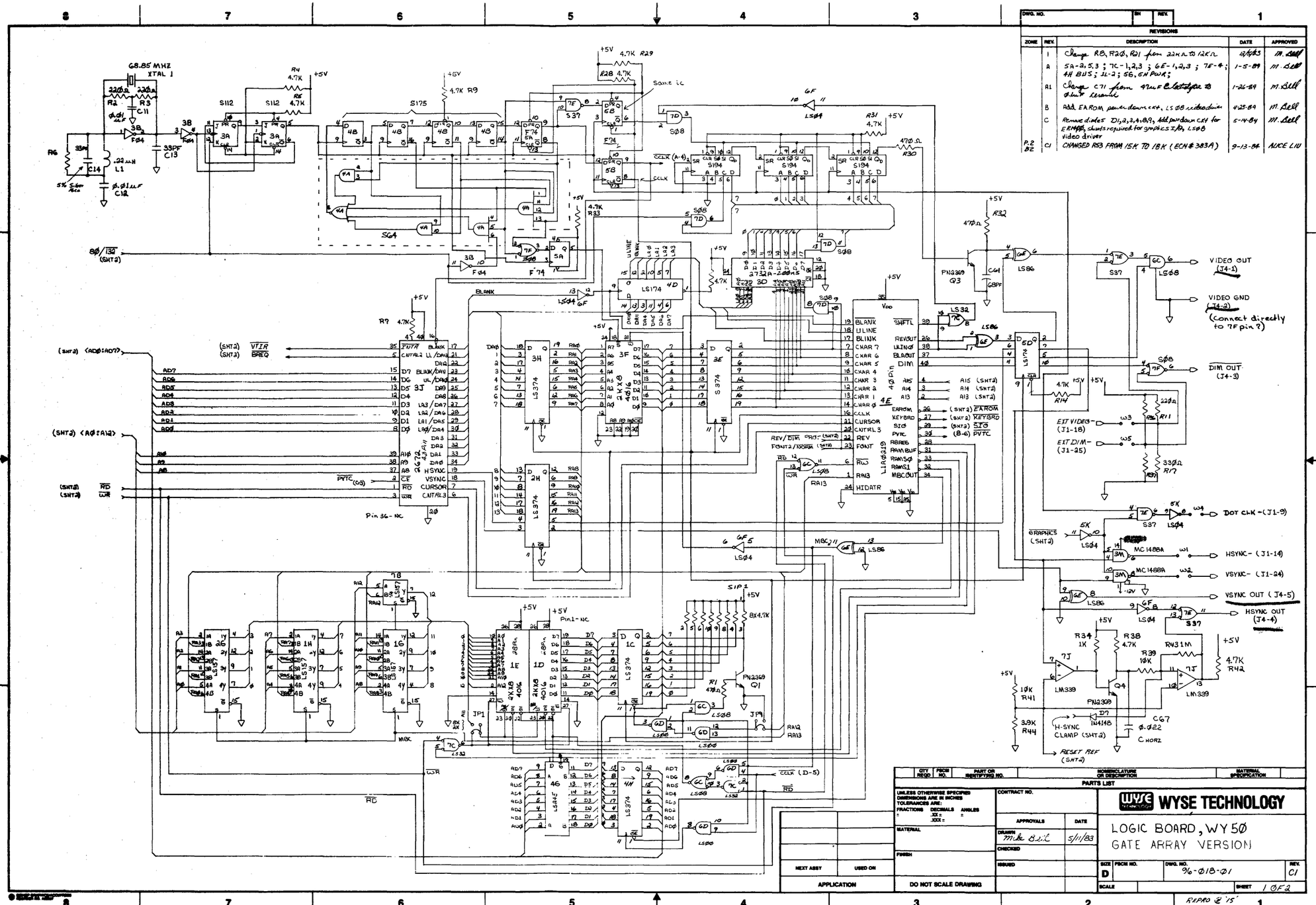

ZONE	REV.	DESCRIPTION	DATE	APPROVED
	1	Change R8, R20, R21 from 22KΩ to 12KΩ	12/5/83	M. Bell
	A	5A-2,5,3 ; 7C-1,2,3 ; 6E-1,2,3 ; 7E-4 ; 4H BUS ; 1L-2 ; 5G, 5H PWR ;	1-5-84	M. Bell
	A1	Change C71 from 47uF Elastolytic to 0.1uF Ceramic	1-26-84	M. Bell
	B	Add EAROM power down ckt, LS08 video driver	4-25-84	M. Bell
	C	Remove diodes D1,2,3,4,8,9, Add pwr down ckt for ERM400, shunts required for graphics I/O, LS08 video driver	5-14-84	M. Bell
P.2 B2	C1	CHANGED R53 FROM 15K TO 18K (ECN # 383A)	9-13-84	ALICE LIU

QTY REQD	FSCM NO.	PART OR IDENTIFYING NO.	NOMENCLATURE OR DESCRIPTION	MATERIAL SPECIFICATION

PARTS LIST

UNLESS OTHERWISE SPECIFIED DIMENSIONS ARE IN INCHES TOLERANCES ARE: FRACTIONS ± DECIMALS .XX ± .XXX ± ANGLES ±

MATERIAL

FINISH

CONTRACT NO.

APPROVALS	DATE
DRAWN Mike Bell	5/11/83
CHECKED	
ISSUED	

WYSE TECHNOLOGY

LOGIC BOARD, WY50
GATE ARRAY VERSION

SIZE D | FSCM NO. | DWG. NO. 96-018-01 | REV. C1

SCALE | SHEET 1 OF 2

NEXT ASSY | USED ON

APPLICATION

DO NOT SCALE DRAWING

REPRO @ '15'

NOTES :
1. ALL RESISTORS ARE 1/4 W, 5% UNLESS OTHERWISE SPECIFIED.
2. ALL CAPACITORS ARE IN UF UNLESS OTHERWISE SPECIFIED.

FUSE : 2A, FOR 115 VAC
2A, FOR 230 VAC

ADJ. +23.5V
VR101 : +24.5V
VR102 : +5.00V
VR201 : FOCUS
VR202 : SUB-BART
VR302 : V-HGT
VR303 : V-LIN

DWG. NO.	SH	REV.
96-019-01	1	E10

REVISIONS

ZONE	REV.	DESCRIPTION	DATE	APPROVED
	C1	SEE ECN # 187	4-8C	
	C2	" " " 191	4-8C	
	D1	" " " 193	4-8C	
	D2	" " " 205	4-8C	
	B3	" " " 208	4-8C	
	F4	" " " 209	4-8C	
	A5	" " " 216	4-8C	
	16	" " " 305	5-8C	
	C1	" " " 285	5-8C	
	C2	" " " 287	5-7-84	
	C2	" " " 310	5-11-84	
	E2	" " " 306	5-14-84	
	E2	" " " 307	5-17-84	
	E6	" " " 113	5-30-84	
	C3	" " " 618	6-27-84	
	C8	" " " 631	8-30-84	
	E4	" " " 639	9-11-84	
	E2	" " " 637	9-20-84	

TO MPS GND
TO LOGIC GND
AC HARNESS 94-036-01
N WHITE
BLACK F
R101 1.2Ω, 3W
BR101, KBPS08
230V
115V
Check
T101
L101
L102
T102
T103
Q101 2N2222
Q102 2SC3150
Q201 2N2222
Q202 BU807
U101 L200
U102 7812
U103, 4N35
U301 TDA1170S
Q401 2N2369
Q402 BF257
D101 RGP5020
D102 SB540
D103 RGP5020
D104 RGP306
D106 TL431C
D107 RGP5020
D201 IN914B
D203 RGP5100
D204 RGP5100
D205 RGP5100
D206 RGP5100
D207 RGP5100
D208 RGP5100
D209 IN914B
D301 RGP5020
D305 11V
D306 12V
D401 IN914B
D402 6.2V
YOKE HARNESS 94-030-01
+46.6VDC
YELLOW
ORANGE
23VDC
Q35VDC
+27.5VDC
23.2 VDC
-12.5VDC
+11.35VDC
+6.13VDC
-23V
11.4VDC
ANODE CAP
BRT HARNESS 94-025-01
J P
YELLOW
WHITE
ORANGE
BLUE
RED
GREEN
BLACK
BRN
YELLOW
RED
BRN
YOKE HARNESS
VIDEO
DIM
V SYNC
H SYNC
+12V
+5V
-12V
-23V
R103 120KΩ 1/2W
C101 330/200
C102 330/200
R104 120Ω 1/2W
R105 750KΩ 1/2W
C104 .22/100
R106 120Ω 1W
C103 1/400
R107 33Ω
C105 10/25
R109 680Ω 3W
C106 500P/1K
R110 1.2Ω 3W
C107 47/35
R112 0.5Ω 1/2W
R113 4.7KΩ
VR101 1KΩ
C112 220/35
R114 680Ω
R115 680Ω 1W
R116 20Ω
C119 .01/50
C109 1000/50
C110 330/50
C111 .22/50
C114 100/25
C115 .22/50
C116 .22/50
R122 68Ω, 3W
C117 100/25
C118 .22/50
C120 4700/10
L103 10μ
C121 680/10
C122 .22/50
R117 47Ω
R118 27KΩ
C123 .22/50
R120 100KΩ
R119 2.2KΩ
R121 68Ω
VR102 1KΩ
C124 .01/1K
C108 1000P/500
R111 1KΩ
R217 1.8Ω
R219 680Ω
C219 22/50
R201 27Ω
R200 75Ω 1/2W
C202 10/25
C205 .022/400
C201 100P/50
R218 150Ω
R250 15Ω
C206 47/35
R203 .33Ω 3W
C203 220/35
C204 .22/50
C207 1/100
R208 1KΩ
C208 .01/1K
R205 100KΩ
R206 100KΩ
R207 47KΩ 1/2W
R209 10KΩ
VR201 2MΩ
R210 100KΩ
R211 100KΩ
C209 100/16
C210 100/50
C211 22/50
C212 22/25
C213 10/100
C214 100/16
C215 .1/100
VR202 100KΩ
R212 2.7KΩ
R215 100KΩ
VR205 50KΩ
C307 100/16
C308 22/50
C303 100/16
R305 3.3Ω
C304 .1/100
R306 220KΩ
C305 33P/50
R311 56KΩ
R312 68KΩ
C311 1000/16
C312 10/25
R314 1.2Ω 1/2W
C306 680P/50
R309 56KΩ
R307 470KΩ
R308 39KΩ
C310 .1/100
VR303 100KΩ
R303 150KΩ
VR302 250KΩ
R304 470KΩ
C309
R301 10KΩ
C301 100P/50
C302 1/100
R302 270KΩ
R408 680Ω
C217 1/100
R213 22KΩ
R401 470Ω
R402 100Ω
R403 390Ω
R404 47Ω
R405 680Ω
C402 100P/50
R406 10Ω
R407 56Ω
R409 220Ω
C401 .22/50
C216 47/100

VIDEO 1 — WHITE
GND 2 — BLACK
DIM 3 — ORANGE
H-SYNC 4 — YELLOW
V-SYNC 5 — GREEN
+12V 6 — BLUE
-12V 7 — GRAY
+5V 8 — RED
GND 9 — BLACK
GND 10 — BLACK
-23V 11 — PURPLE
+5V 12 — RED
2.5V 24μs
2.8V 15μs
MPS LOGIC HARNESS 94-034-01

PARTS LIST

QTY REQD	FSCM NO	PART OR IDENTIFYING NO	NOMENCLATURE OR DESCRIPTION	MATERIAL SPECIFICATION

99-019-01	WY-50
NEXT ASSY	USED ON

APPLICATION
THIRD ANGLE PROJECTION

UNLESS OTHERWISE SPECIFIED DIMENSIONS ARE IN TOLERANCES
INCHES: FRACTIONS ± ; DECIMALS .XX ±, .XXX ±
METRIC: 0.X ±, 0.XX ±
ANGLES
MATERIAL / FINISH
DO NOT SCALE DRAWING.

CONTRACT NO

APPROVALS	DATE
DRAWN ALICE LIU	8-3-84
CHECKED T.S.	11-8-84
ISSUED	11-8-84
	10-25

WYSE WYSE TECHNOLOGY

WY-50 MONITOR POWER SUPPLY

SIZE	FSCM NO.	DWG. NO.	REV
D		96-019-01	E10

SCALE — SHEET

INDEX

A

Address Decoder, 6-5
Adjustment
  display, 4-4
  display magnets, 4-8
  focus, 4-5
  height, 4-5
  linearity, 4-5
  sub-brightness, 4-8
  width, 4-6
  yoke lock, 4-6
Alignment
  display, 4-4
Altitude
  operational range, A-3
Attribute Bit Assignments, 6-19
Attribute Controller, 6-19
Attribute Decoding Logic, 6-6
Attribute Latches, 6-7
Atributes
  video, A-1
Auxiliary Port, 6-16
  handshake, A-3
Auxiliary
  baud rate, A-2

B

Bandwidth
  video, A-1
Baud Rate
  auxiliary port, A-2
  MODEM port, A-2
Bidirectional Bus Driver, 6-6
Bit Assignments
  attribute, 6-19
Bit Length
  MODEM port, A-2
Blanking
  horizontal, 6-1
  vertical, 6-1

C

Cathode Ray Tube, 6-1
Character, 6-7
  set, A-1
Character Cell, 6-19
Character Generator, 6-7
Character Matrix, 6-1, A-1
Circuits
  row decoder/key closure detection, 6-14
  video clock, 6-17

Column Decoder, 6-14
Command Latch, 6-7
Communications Mode, A-2
Compatible Terminal Mode, A-3
Component Diagram
  monitor/power supply, 4-1
Component Identification
  x-y axis, 6-2
Connections for
  TCOM Test Plug, 3-2
Control
  attribute, 6-18
Controller
  CRT, 6-5
  programmable video, 6-18
  video, 6-17
Converters
  DC to AC, 6-9
  level (EAROM), 6-7
  level (EIA to TTL), 6-8
  level (TTl to EIA), 6-8
  parallel to serial, 6-7
CPU Clock Generator, 6-8
CRT, 1-4, 6-1, 6-11
CRT Controller, 6-5
Cursor
  type, A-2

D

DC to AC Converter, 6-9
Decoder
  address, 6-5
  column, 6-14
Diagnostic Self-Test, 3-2
Disable, 6-1
Display
  color, A-1
  capacity, 1-6
  margins, size of, 4-3
  measurement, tools required, 4-3
  RAM, 6-5
  specification, 4-3
Display Alignment, 4-4
  tools required, 4-4
Display Magnets
  adjustment, 4-8
  screen areas affected by, 4-9
Domestic Power Requirements, 2-8
Dot Stretcher, 6-7
Doubler
  voltage, 6-8
Driver
  bidirectional bus, 6-6
  line, 6-14
  video, 6-7, 6-11

E
Environmental Considerations
  air flow, 1-7
  temperature, 1-7
Error Messages
  power-on self-test, 3-1

F
Field, 6-1
Flyback Transformer, 6-11
Focus Adjustment, 4-5
Frequency
  horizontal, A-1
Fuse Requirements, 1-8

G
Generator
  character, 6-7, 6-19
  CPU clock, 6-8
  TCOM clock, 6-8
  video clock, 6-7

H
Handshake
  AUX port, A-3
  MODEM port, A-2
Height Adjustment, 4-5
Horizontal Blanking, 6-1
Horizontal Frequency, A-1
Horizontal Oscillator, 6-11
Horizontal-Synchronization Signal
  how to check, 3-3
Humidity
  operational range, A-3

I
Installation, 1-7
  communications cable, 1-8
  fuse, 1-8
  keyboard, 1-8
  power cord, 1-8
  printer,1-8
Interface
  asynchronous, 1-6
  cables, A-2
  communication, 6-16
  keyboard, 6-17
  modem, 1-6
  primary, 1-6
  RS-232C, 1-6
International Power Requirements, 2-8

K
Key Closure Detection, 6-14
Key Switch Matrix, 6-14
Keyboard, 1-4
  specifications, A-1, A-2
Keyboard Codes
  language, A-1
Keyboard Latch, 6-6

L
Language Keyboard Codes, A-1
Latch
  attribute, 6-7
  character generator address, 6-7
  command, 6-7
  keyboard, 6-6
  low buffer, 6-6
  low order address, 6-6
  memory bus control, 6-6
  row address, 6-6
  row buffer data latch, 6-6
  row buffer diagnostic, 6-6
Level Converters (EAROM), 6-7
Level Converters (EIA to TTL), 6-8
Level Converters (TTL TO EIA), 6-8
Line Drivers, 6-14
Linearity Adjustment, 4-5
Logic
  attribute decoding, 6-6
Logic Specifications, A-3
Low Buffer Latch, 6-6
Low Order Address Latch, 6-6

M
Main Switching Power Transformer, 6-9
Major Replaceable Units
  WY-50, 2-1
Materials Needed
  WY-50 removal and replacement, 2-3
Matrix
  character, 6-1
  key switch, 6-14
Memory
  display, 6-16
  nonvolatile, 6-7, 6-17
  screen, A-2
Memory Bus Control, 6-19
Memory Bus Control Latch, 6-6
Microprocessor
  single component, 6-5
Mode
  communications, A-2
  compatible terminal, A-3
  native, A-3
MODEM Port, 6-16

baud rate, A-2
bit length, A-2
handshake, A-2
parity bit, A-2
stop bit, A-2
Multiplexer
pass-thru, 6-8
RAM address, 6-5

N
Native Mode, A-3
Net Weight, A-1
Nonvolatile Memory, 6-7

O
Operator Controls
brightness, 1-8
power, 1-8
setup parameters, 1-9
Orientation
WY-50, 2-1
Oscillator
horizontal, 6-11
vertical, 6-11

P
Parallel-to-Serial Converter, 6-7
Parity Bit
MODEM port, A-2
Pass-Thru Multiplexer, 6-8
in Assignments
8031, 6-14
Port
AUX, 6-16
MODEM, 6-16
Power, A-3
Power Requirements
how to change, 2-8
Power Supply
how to adjust, 4-1
adjustment, tools required, 4-2
voltages, 6-8
Power Supply Quick-Reference Procedure, 3-3
Power-On Self-Test Error Messages, 3-1
Problems and Adjustments, 4-4
PROM, 6-5
Protected Characters, 6-19

R
RAM
display, 6-5
row buffer, 6-6
RAM Address Multiplexer, 6-5

Register
  row buffer diagnostic, 6-20
  video shift, 6-20
Reverse Video Functions, 6-19
Row Address Latches, 6-6
Row Buffer Data Latch, 6-6
Row Buffer Diagnostic Latch, 6-6
Row Buffer RAM, 6-6
Row Decoder/Key Closure Detection Circuit, 6-14
Row Decoding, 6-14

S
Scan Lines, 6-1
  total, A-2
  total active, A-2
Screen
  format, A-1
  memory, A-2
  size, A-1
Self-Test
  diagnostic, 3-2
  power-on, 3-1
Setup Mode, 1-8, 1-9
Single Component Microprocessor, 6-5
Specifications, A-1
  display, 4-3
  display margins, 4-3
Stop Bit
  MODEM port, A-2
Sub-Brightness Adjustment, 4-8
Supply
  +12 volt, 6-11
  +24 volt, 6-11
  +5 volt, 6-11
  -12 volt, 6-11
  -23 volt, 6-11
Swivel, A-1
System Firmware, 1-3

T
TCOM Clock Generator, 6-8
TCOM Test Plug, 3-2
Telecommunications Interfaces, 1-4
Temperature
  operational range, A-3
Terminal
  clearances, 1-6
  compatible mode, A-3
  placement of, 1-6
  specifications, A-1
Test Pattern
  alignment, 4-3
Tilt, A-1

Tools Needed
  WY-50 removal and replacement, 2-3, 2-4
Tools Required for Display Alignment, 4-4
Tools Required for Display Measurement, 4-3
Tools Required for the Power Supply Quick Reference Check, 3-8, 4-2
Tools Required to Check Horizontal Synchronization, 3-9
Transformer
  flyback, 6-11
  main switching power, 6-9
Troubleshooting Flowchart, 3-3
  how to use, 3-3

U
UART, 6-5

V
Vertical Blanking, 6-1
Vertical Hold
  early terminals, 3-9
  how to adjust, 3-9
Vertical Oscillator, 6-11
Video
  attributes, A-1
Video Bandwidth, A-1
Video Clock Generator, 6-7
Video Drivers and Dot Stretcher, 6-7, 6-11
Voltages
  specifications, A-3
  power supply, 6-8
  +12 volt supply, 6-11
  +24.5 volt supply, 6-11
  +5 volt supply, 6-11
  -12 volt supply, 6-11
  -23 volt supply, 6-11
Voltage Doubler, 6-8
VR201, 4-2

W
Width Adjustment, 4-6

Y
Yoke Lock Adjustment, 4-6